UNITED STATES DISTRICT COURT
EASTERN DISTRICT OF PENNSYLVANIA

RAILWARE, INC.,	:	
Plaintiff,	:	
-against-	:	Case No.:
SOUTHEASTERN PENNSYLVANIA TRANSPORTATION AUTHORITY,	:	**JURY TRIAL REQUESTED**
Defendant.	:	
	:	

COMPLAINT FOR PATENT INFRINGEMENT

Plaintiff Railware, Inc. ("Railware") files this complaint against defendant Southeastern Pennsylvania Transportation Authority ("SEPTA" or "Defendant") and alleges as follows:

INTRODUCTION

1. This lawsuit concerns Defendant's willful and deliberate infringement of Railware's patents.

2. Railware produces one of the premier train traffic control systems in the world, Dispatch X. Among Railware's suite of tools in or for its train traffic control systems is its patented safety technology, the Enhanced Employee Protection System ("EEPS"). Railware's EEPS is designed to ensure the safety of track workers that must enter onto tracks to perform maintenance and repairs. During track work, trains are typically blocked from traversing sections of tracks that have railway workers on them. But like all human-controlled systems, these systems are subject to operator error, which can result in serious injury or death to railway workers. To protect against these high stakes for railway workers, Railware's EEPS forestalls errant train blocking, by placing the authority to lift a block in the hands of the railway worker

on the tracks, thereby preventing the railway traffic controller or dispatcher from accidentally lifting a block and endangering the railway worker(s). Whereas old systems placed the safety of the railway workers in the hands of a geographically remote dispatcher, Railware's EEPS places the safety of the railway workers in the hands of the workers themselves.

3. Furthermore, Railware holds, *inter alia*, a common law trademark in the EEPS and/or "Enhanced Employee Protection System" marks/designations.[1] Railware's first use of these marks in commerce was no later than November 2013. The EEPS mark/designation is also the subject of pending U.S. Trademark Application No. 98436662.

4. Railware's systems, including Railware's EEPS, are used on some of the busiest railroads in the country, including the Metro North Railroad and the Long Island Rail Road. Millions of people rely on Railware's products to transport them safely every day.

PATENTS-IN-SUIT

5. Railware's owner and inventor of the patents-in-suit, Ross Pirtle, spent years developing the patented technology and EEPS. As a result of his years of effort and investment, Mr. Pirtle was awarded two United States patents: U.S. Pat. No. 9,517,782 (the "'782 patent") (a copy of which is attached as **Exhibit A**) and 9,403,545 (the "'545 patent"). Mr. Pirtle assigned the '782 and '545 patents to Railware. The '545 patent has since been reissued as two reissue patents: (1) U.S. Reissue Pat. No. RE47,835 (the "'835 patent") (a copy of which is attached as **Exhibit B**); and (2) U.S. Reissue Pat. No. RE49,115 (the "'115 patent") (a copy of which is attached as **Exhibit C**) (the '782 patent, the '835 patent, and the '115 patent are collectively

[1] Accordingly, any usage of the terms "enhanced employee protection system" or "EEPS" herein that is ascribed to any entity that is not Railware denotes that entity's usage of certain functionalities described in the Asserted Patents. No other entity, beyond Railware, has exclusive rights, title and/or legal ownership in or of the EEPS and/or "Enhanced Employee Protection System" marks/designations or any goodwill associated therewith, as applied to computer software, recorded, for use in railway traffic control systems and apparatus for safety of railway workers and property.

referred to herein as the "Asserted Patents").

PARTIES

6. Railware is a corporation organized and existing under the laws of New York with its principal place of business located in Hauppauge, NY. Railware is the owner of all right, title, and interest in the Asserted Patents.

7. Railware is the creator of Dispatch X, one of the premier train traffic control systems in the world, used by some of the busiest railroads in the country, including the Metro North Railroad and the Long Island Rail Road. Railware's owner is also the creator of the patented EEPS technology, which saves railway workers' lives by placing the power to lift a block on a section of track in the hands of the railway workers themselves that are on the track.

8. SEPTA is a "separate body corporate and politic body" created under Pennsylvania law, further known as a "metropolitan transportation authority" or "authority". 74 Pa. Stat. and Cons. Stat. § 1711. SEPTA has its principal place of business at 1234 Market Street, Philadelphia, PA 19107. SEPTA operates a mass-transit system within Philadelphia and its surrounding counties, as well as parts of Delaware and New Jersey.[2]

JURISDICTION AND VENUE

9. This Court has subject matter jurisdiction of the action pursuant to the patent laws of the United States, 35 U.S.C. § 1 *et seq.*, and pursuant to 28 U.S.C. § 1338 because Railware's claims against SEPTA both arise out of the patent laws of the United States and raise a federal question.

10. This Court has personal jurisdiction over SEPTA at least because (1) SEPTA is incorporated under the laws of the Commonwealth of Pennsylvania, and (2) SEPTA owns and

[2] *About,* SEPTA.ORG, https://www.septa.org/about/ (last visited June 27, 2024).

operates significant portions of track in a number of states, including in this District.

11. Venue is proper in this judicial district pursuant to 28 U.S.C. § 1400(b) because, as alleged herein, SEPTA has committed acts of infringement in this District and SEPTA maintains a regular and established place of business in this District. Specifically, SEPTA maintains a headquarters in this District at 1234 Market Street, Philadelphia, PA 19107, which is a regular and established place of business. SEPTA maintains a dispatch and control center at, at least, its address at 1234 Market Street. As to acts of infringement in this District, SEPTA's operation of its dispatch system at, at least, 1234 Market Street has infringed and continues to infringe the Asserted Patents in this District as set forth herein. Specifically, SEPTA has operated and/or continues to operate one or both of Wabtec's RailwayNet^{SM} or Advanced Information Management ("AIM") platform (formerly Collins Aerospace ARINC RailwayNet^{SM} or AIM platform) and/or another same or similar systems. Operation of these systems, as implemented by SEPTA, constitutes infringement of the Asserted Patents as set forth herein.

FACTUAL ALLEGATIONS

A. Railware and its Technology

12. Railware provides one of the premier train traffic control systems in the world, Dispatch X. Railware's systems are used by some of the busiest railroads in the country, including to direct trains at Grand Central Station and Penn Station. Railware's systems are the industry standard for traffic control and operations management. Dispatch X provides customers with high-definition graphics and point and click usability. It is scalable for everything from a local control panel on a single interlocking to an entire railroad. Railware supports all railroad protocols so customers can communicate with systems of any complexity in one high resolution, graphic interface.

13. Among the features offered by Railware's systems is its patented EEPS

technology. EEPS was developed by Railware's owner and inventor on the Asserted Patents, Ross Pirtle, to save railway workers' lives.

14. Many modern railroads control the movement of trains through a railway network using a centralized system known as centralized traffic control (CTC). CTC systems are used for monitoring, tracking, and operating trains traversing tracks throughout a network. CTCs are controlled by train dispatchers. CTC systems typically include control consoles, that display various pieces of information, such as track conditions, train traffic, and scheduling. Through the control console, the dispatcher controls the movement of trains throughout the railway network. Movement of trains within a sector of track is typically governed by interlocking signals, which are controlled by the dispatcher via a control console.

15. When railway tracks require maintenance, railway field workers must physically enter the track area to perform the necessary maintenance. Entering an active track area poses grave risks to the railway field workers, who are defenseless against train traffic. Over time, various safety systems were developed, such as alarm systems that alerted railway workers to incoming train traffic, ideally allowing them time to vacate the track area before the train approached. These systems proved inadequate in protecting railway field workers.

16. Other examples of inadequate safety precautions include NORAC's Operating Rules, including the "Form D" control system. NORAC's Operating Rules have existed since the mid-1980's and "Form D" has been an integral part of NORAC's Operating Rules since at least the early 1990's. A "Form D" contains "written authorization(s), restriction(s), or instruction(s) issued by the Dispatcher to specified individuals."[3] These instructions can include a "Form D Line 4," which is used when "removing a track from service."[4] The Operating Rules require the

[3] NORAC Operating Rules, 6th ed., (Jan. 1, 1997).
[4] *Id.* at 48.

dispatcher to determine that "controlled signals leading to the affected track are in Stop position" prior to issuing a "Form D Line 4."[5] Similarly, prior to releasing a "Form D," the dispatcher ostensibly must take certain actions, including "contact the addressee(s) and state his intent to cancel the Form D . . ., state the Form D number and, date, the cancellation time and date, and his initials, [and] ensure that all cancellation information is repeated [by the addressee] correctly."[6] Despite these protections, human errors and accidents continued to occur, such as those recognized in the Federal Railroad Administration's (FRA) Final Rule and in the Asserted Patents. Such errors included mistakes such as where "the train dispatchers did not maintain the required blocking devices."[7]

17. The birth of CTC systems provided a better option. A remote dispatcher could remotely control the tracks used by trains. This remote control enabled the remote dispatcher to "block" sections of track and to temporarily reroute trains away from blocked track sections that were being worked on by railway field workers. But these systems too suffered from certain drawbacks. Specifically, the blocking of track sections was controlled entirely by the remote dispatcher. Human error could and did lead to blocks being removed prematurely or mistakenly by the dispatcher, such as either because the dispatcher falsely believed that the work was complete, or because the dispatcher intended to remove a different block and mistakenly removed a block on a track section where railway field workers were still working.

18. To overcome these limitations, Mr. Pirtle developed patented technology and EEPS. The patented technology and Railware's EEPS forestalls errant blocking by requiring railway traffic controllers and employees on the ground to cooperate to lift a block. Every time a

---

[5] *Id.*
[6] *Id.* at 66.
[7] Federal Railroad Administration, Railroad Workplace Safety; Roadway Worker Protection Miscellaneous Revisions (RRR) at 75-76 (May 26, 2016).

block is placed, a unique code is generated using, for example, industry leading RSA-authentication and sent to the railway track foreman in the field. In order for that block to be removed, its unique key must be entered by the dispatcher or otherwise appropriately received at the operations control or dispatch center to authorize it. By putting the power to lift a block not solely in the hands of the dispatcher in the operations control center, but also those of railway workers operating under its protection, the patented technology and Railware's EEPS prevents mistakes and ultimately saves lives, prevents injury and prevents damage to equipment and/or property. EEPS is offered to Railware's customers and potential customers with Dispatch X.

19. In short, the inventions claimed in the Asserted Patents fundamentally altered the way that railroads approach railway worker safety. The inventions integrated a technological barrier between the train dispatcher and releasing blocks that is controlled by the railway workers that are working on or near tracks. The claimed inventions of the Asserted Patents converted what had previously been a single user, single device process into a multi-device process, with the goal and accomplishment of improving railway worker safety. To accomplish this goal, the Asserted Patents introduced a new architecture and algorithm for placing and releasing blocks that was hitherto unknown. This change requires the restructuring of communications into an unconventional arrangement and introduces new communications to the technological environment never before used in railway safety technology.

20. As a result of Railware's and Mr. Pirtle's hard work and innovations, Railware's software won the Federal Railroad Administration ("FRA") President's Award.

21. Ross Pirtle was awarded two U.S. patents for his inventions: the '782 patent and the '545 patent. The '545 patent has since been reissued as the '835 patent and the '115 patent. The '782 patent, the '835 patent, and the '115 each cover Railware's EEPS technology.

22. The ’782 patent includes claims directed to methods and systems for railway control. For example, in claim 5, the claimed method to enhance railway control to protect safety of railway workers on or near railway tracks comprises (1) configuring a mobile user device of a railway field worker to provide a device user interface to display information received via a network from a railway control apparatus and to permit the railway field worker to respond to prompts displayed thereon; (2) providing a terminal user interface on a terminal to permit a terminal user to request the railway control apparatus to place a block on one or more specified track sections to permit a railway field worker to enter the track sections while blocking railway traffic to said track sections; (3) generating by the railway control apparatus a release code and transmitting the release code to an electronic contact address accessible by the railway field worker via operation of the user interface of the user terminal; and (4) permitting the block to said one or more track sections to be removed by the railway control apparatus only upon receiving the release code from the user terminal in return.

23. The ’835 patent includes claims directed to methods and systems for centralized railway control. For example, in claim 19, the claimed method for controlling railway access using a railway traffic control apparatus of a centralized railway control system configured for centralized control of traffic of a centrally controllable railway network including plural railways and a plurality of railway traffic interlocks dispersed in said plural railways constituting said railway network comprises (1) providing a user interface of the railway traffic control apparatus, including a block placing part to place a block on one or more specified track sections in any of said plural railways constituting said railway network that is managed by centralized control operation from the railway traffic control apparatus, the railway traffic control apparatus controlling, by said centralized control operation, one or more interlocks amongst the plurality of

railway traffic interlocks dispersed in said plural railways constituting said railway network, to block railway traffic to the specified track sections and thereby to permit a railway field worker to enter the track sections; (2) generating a removal code, determining an electronic contact address of the railway field worker by accessing a rail personnel contact database registering, for each railway personnel, electronic contact information of the railway personnel, and transmitting the removal code to the electronic contact address of the railway field worker; and (3) permitting the block to said one or more track sections to be removed only upon entry of the removal code by said centralized control operation from the railway traffic control apparatus.

24. The ’115 patent includes claims directed to methods and systems for centralized railway control. For example, in claim 20, the claimed railway control apparatus for centralized control of a centrally controllable railway network including plural railways and a plurality of railway interlocks dispersed in said plural railways comprises (1) a processor for controlling a plurality of track sections in the railway network, wherein each track section is associated with a corresponding interlock and is disposed in any of said plural railways of said railway network that is managed by centralized control operation from the railway control apparatus, the processor controlling, by said centralized control operation, one or more interlocks amongst the plurality of railway interlocks dispersed in said plural railways of said railway network, to block railway traffic to one or more specified track sections; and (2) a memory device storing computer-executable instructions, wherein execution of the computer-executable instructions by the processor causes the railway control apparatus to: (a) receive a selection of at least one track section amongst the plurality of track sections; (b) transmit a block signal to the corresponding interlock associated with the at least one selected track section, to place a block on the selected track section by said centralized control operation from the railway control apparatus;

(c) generate a secret code associated with the at least one selected track section; and (d) transmit the secret code to a remote user terminal.

B. Regulatory Requirements and Recommendations

25. On or about December 16, 1996, the Federal Railroad Administration ("FRA") promulgated 49 C.F.R. 214.319, which governs working limits on railroad tracks.

26. On or about November 25, 2014, the FRA issued Safety Advisory 2014-02 "to reemphasize the importance of clear communication and compliance with applicable rules and procedures regarding roadway worker authority limits on controlled track."[8] In Safety Advisory 2014-02, the FRA specifically stated "FRA recommends that railroads adopt one or more electronic technologies that may serve to fill the technology gap. Examples of such technology already in use include the following systems: Enhanced Employee Protection System [EEPS]. . . ."[9]

27. The FRA described one embodiment of Railware's patented EEPS technology as follows:

> when an RWIC [roadway worker in charge] secures a track authority, he or she is provided a code via a beeper-like device that is not provided to the dispatcher issuing the authority. The system is designed so that the dispatcher cannot remove the blocking devices that are preventing the clearing of the absolute signal until the RWIC provides him or her with the issued code. Thus, the dispatcher cannot remove the associated on-track safety provided by the authority without the knowledge and agreement of the RWIC.[10]

28. On or about June 10, 2016, the FRA issued a Final Rule amending 49 C.F.R. 214.319. Specifically, 49 C.F.R. 214.319(b) provides:

> (b) Each . . . railroad providing regularly scheduled intercity or commuter rail passenger transportation that utilizes controlled track working limits as a form of

[8] DOT Roadway Worker Authority Limits Rule, 79 Fed. Reg. 70268 (2014).
[9] *Id.* at 70269.
[10] *Id.*

on-track safety (under §§ 214.321 through 214.323) in signalized territory shall:

> (1) By July 1, 2017, evaluate its on-track safety program and identify an appropriate method(s) of providing redundant signal protections for roadway work groups who depend on a train dispatcher or control operator to provide signal protection in establishing controlled track working limits. For purposes of this section, redundant signal protections means risk mitigation measures or safety redundancies adopted to ensure the proper establishment and maintenance of signal protections for controlled track working limits until such working limits are released by the roadway worker in charge. Appropriate redundant protections could include the use of various risk mitigation measures (or a combination of risk mitigation measures) such as technology, training, supervision, or operating-based procedures; or could include use of redundant signal protection, such as shunting, designed to prevent signal system-related incursions into established controlled track working limits; and
>
> (2) By January 1, 2018, specifically identify, implement, and comply with the method(s) of providing redundant protections in its on-track safety program.

29. SEPTA is a railroad subject to the provisions of 49 C.F.R. 214.319(b).

30. In the FRA's Section-by-Section Analysis that accompanied the June 10, 2016 rule change, the FRA specifically referred to Safety Advisory 2014-02 and its discussion of Railware's EEPS, concluding "FRA encourages railroads to use new technologies ***such as EEPS*** as they become available to provide redundant signal protections for roadway work groups and to comply with new paragraph (b)."[11]

31. The "EEPS" system referred to by the FRA is covered by the Asserted Patents.

32. SEPTA has followed and continues to follow the FRA's recommendations and implemented the patented technology of the Asserted Patents into at least its control center integration systems and/or CTC systems in a manner(s) covered by the claims of the Asserted Patents. SEPTA deploys its infringing systems, including the patented technology of the Asserted Patents wherever it provides centralized train control systems, including in

[11] DOT Roadway Worker Protection Final Rule, 81 Fed. Reg. 37839, 37861 (emphasis added).

Pennsylvania.

C. SEPTA's Notice of the Patents

33. SEPTA was made aware of its infringement of the '545 patent (of which the '835 patent and the '115 patent are reissues of) at least as of December 15, 2016. SEPTA was made aware of its infringement of the '782 patent at least as of February 1, 2017.

34. More particularly, on December 15, 2016, a representative of Railware reached out to SEPTA via email stating:

> It is our understanding that you are currently using the EEPS track blocking technology developed by Railware at SEPTA. Railware holds a patent in this technology (Patent No: 9,403,545 B2) and has licenses it to others railroads such as Metro North and Long Island Rail Road. For more information about Railware, please go to www.railware.net.
>
> We are delighted that you see the value in using EEPS at SEPTA and would like to meet with you to discuss an appropriate licensing arrangement,
>
> I look forward to hearing from you.

35. A representative of Railware followed up on this communication once more in December 2016.

36. On January 31, 2017, SEPTA responded to Railware's emails via a telephone call, whereby a further conference call was scheduled to discuss Railware's email.

37. On February 1, 2017, this conference call occurred, whereby Railware was directed to communicate directly with another individual at SEPTA. On February 2, 2017, Railware reached out to the identified individual by email, but received no response. On March 2, 2017, Railware followed up via email, but again received no response.

38. Accordingly, SEPTA has had actual knowledge of its infringement of the '545 patent (of which the '835 patent and the '115 patent are reissues of) since at least as of December 15, 2016, and of its infringement of the '782 patent at least as of February 1, 2017.

39. Further, assertion of infringement of only method claims of a patent does not implicate the Patent Act's marking provision (35 U.S.C. § 287). However, to the extent the marking statute does apply, since at least October 21, 2020, Railware has included the patent numbers of the Asserted Patents (1) in the header bar of Railware's Dispatch X system; and/or (2) on Railware's freely and publicly available website.[12] Accordingly, SEPTA has had constructive notice and knowledge of the Asserted Patents since at least October 21, 2020.

40. Moreover, after its communications with SEPTA discussed above, Railware filed suit against National Railroad Passenger Corporation d/b/a Amtrak ("Amtrak") for infringement of the Asserted Patents in relation to Amtrak's implementation of the "EEPS" system that it copied from SEPTA and Metro North. Accordingly, SEPTA also had actual or constructive knowledge of the Asserted Patents at least as of June 15, 2022 (the filing date of the complaint against Amtrak). *See Railware Inc. v. National Railroad Passenger Corporation d/b/a Amtrak*, No. 1:22-cv-5013 (SDNY 2022).

D. SEPTA's Infringement with RailwayNet^{SM}/AIM and/or Any Same or Similar Systems or Methods

41. SEPTA operates one or more control centers, including at least one in this District at 1234 Market Street, Philadelphia, PA 19107. A control center is "a centralized facility that manages the safe and efficient movement of all of SEPTA's operating modes and provides customer service alerts to our passengers."[13] Further, "[a]ll Control Center functions and associated equipment are located at SEPTA's 1234 Market Street headquarters on the 19th floor," and "the Control Center personnel are responsible for ensuring that SEPTA's established

[12] *EEPS with SURELOCK*, RAILWARE, http://railware.net/eeps.html (last visited June 27, 2024).
[13] *Fiscal Year 2018 Operating Budget*, SEPTA (available at https://planning.septa.org/wp-content/uploads/2022/07/Operating-Budget-FY2018.pdf) at 97-98.

service levels are maintained 24 hours a day, 7 days a week."[14] The control center functions include, *inter alia*, "**Railroad Control**" whereby "[t]he Railroad Control Center utilizes a Centralized Train Control System to provide realtime information and control functions to the 19th floor" and "[s]ix (6) train dispatchers have the responsibility to operate switches and display signals on SEPTA-controlled territory, managing the movement of 780 scheduled trains a day." (bolding in original.)[15] SEPTA maintains at least 230 active rail stations and over 450 miles of track.[16]

42. SEPTA has used and/or currently uses a centralized train control system known as RailwayNet[SM] and/or AIM, which was formerly provided by Rockwell Collins, Inc. – a subsidiary of Raytheon Technology that did business as "Collins Aerospace" – that has since been acquired by Wabtec Corporation ("Wabtec"), or a same or similar system.[17]

43. ARINC Incorporated ("ARINC") was the original creator of what would become the RailwayNet[SM] and/or AIM systems. In 2013, Rockwell Collins acquired ARINC. In 2018, United Technologies acquired Rockwell Collins. In 2020, Raytheon Technologies merged with

---

[14] *Id.*
[15] *Id.* at 98.
[16] Testimony of Thomas J. Nestel, III, Chief of Transit Police Southeastern Pennsylvania Transportation Authority (SEPTA) Philadelphia, PA Before the House Committee on Homeland Security Subcommittee on Transportation and Protective Security (Nov. 28, 2017) (available at https://docs.house.gov/meetings/HM/HM07/20171128/106650/HHRG-115-HM07-Wstate-NestelT-20171128.pdf)
[17] *Advanced Information Management (AIM) Rail Dispatch*, WABTEC, https://www.wabteccorp.com/digital-intelligence/signaling-and-train-control/dispatch/advanced-information-management-aim-rail-dispatch (last visited June 27, 2024) (describing AIM); *RailwayNet Positive Train Control Communication Solution*, WABTEC, https://www.wabteccorp.com/digital-intelligence/signaling-and-train-control/communications/railwaynet-positive-train-control-communication-solution (last visited June 27, 2024) (describing RailwayNet[SM]); *see ARINC Wins Centralized Electrification and Traffic Control System for Amtrak's Northeast Corridor Operations*, Press Release (May 7, 2008) (available at https://cisp.cachefly.net/assets/articles/attachments/13192_arinc.pdf) ("In addition to Amtrak trains, the system will be used to dispatch . . . commuter trains from Southeastern Pennsylvania Transportation Authority (SEPTA). . . .); *see also Meeting Minutes re: Contract Op39622521, Metro Exposition Scada Integration*, Los Angeles County Transportation Authority: Operations Committee (July 15, 2010), Attachment A-1 (available at https://boardarchives.metro.net/Items/2010/07_July/20100722RBMItem27.pdf) ("ARINC has provided systems engineering solutions based on their proposed Advanced Information Management (AIM) platform for the following rail transportation agencies: . . . Southeastern Pennsylvania Transportation Authority.")

United Technologies, and rebranded Rockwell Collins/ARINC as Collins Aerospace. In 2022, Collins Aerospace's ARINC rail solutions business segment was acquired by Wabtec.[18] This acquisition included RailwayNet^{SM} and AIM systems.[19]

44. ARINC provided "fully integrated train control and Positive Train Control (PTC), control center integration and customer information systems, [] cybersecurity and life-cycle management" services to "regional, short line, inter-city, commuter, subway and light rail systems across the United States and Canada."[20]

45. Likewise, Wabtec advertises that it provides, *inter alia*, "advanced train control solutions that combine electronic train management, virtual block signaling, satellite communication, and precise positioning into a comprehensive train control solution" and "integrated services including construction, material, engineering, system integration, track services, and turnkey solutions for CTC, CBTC, and PTC systems."[21]

46. Wabtec offers a number of products and/or systems that provide, either alone or in combination with other products, infringing functionality, including, but not limited to RailwayNet^{SM} and/or AIM.

47. SEPTA's implementation of Wabtec's software and/or hardware systems or any same or similar systems or methods throughout its rail networks infringe the Asserted Patents.

---

[18] *Wabtec Acquires Collins Aerospace's ARINC Rail Solutions Business to Extend Rail Optimization Portfolio*, WABTEC (June 16, 2022), https://www.wabteccorp.com/newsroom/press-releases/wabtec-acquires-collins-aerospace-s-arinc-rail-solutions-business-to-extend-rail-optimization-portfolio.

[19] *Advanced Information Management (AIM) Rail Dispatch*, WABTEC, https://www.wabteccorp.com/digital-intelligence/signaling-and-train-control/dispatch/advanced-information-management-aim-rail-dispatch (last visited June 27, 2024) (describing AIM); *RailwayNet Positive Train Control Communication Solution*, WABTEC, https://www.wabteccorp.com/digital-intelligence/signaling-and-train-control/communications/railwaynet-positive-train-control-communication-solution (last visited June 27, 2024) (describing RailwayNet^{SM}).

[20] *Wabtec Acquires Collins Aerospace's ARINC Rail Solutions Business to Extend Rail Optimization Portfolio*, WABTEC (June 16, 2022), https://www.wabteccorp.com/newsroom/press-releases/wabtec-acquires-collins-aerospace-s-arinc-rail-solutions-business-to-extend-rail-optimization-portfolio.

[21] *Signaling and Train Control*, WABTEC, https://www.wabteccorp.com/digital-intelligence/signaling-and-train-control (last visited June 27, 2024).

48. For example, with respect to the ’782 patent, SEPTA’s software and/or hardware systems practice the claimed method for (1) configuring a mobile user device of a railway field worker to provide a device user interface to display information received via a network from a railway control apparatus and to permit the railway field worker to respond to prompts displayed thereon; (2) providing a terminal user interface on a terminal to permit a terminal user of the terminal to request the railway control apparatus to place a block on one or more specified track sections to permit a railway field worker to enter the track sections while blocking railway traffic to said track sections; (3) generating by the railway control apparatus a release code and transmitting the release code to an electronic contact address accessible by the railway field worker via operation of the user interface of the user terminal; and (4) permitting the block to said one or more track sections to be removed by the railway control apparatus only upon receiving the release code from the user terminal in return, such that they infringe one or more claims of the ’782 patent.

49. As a further example, with respect to the ’835 patent, SEPTA’s software and/or hardware systems practice the claimed method for controlling railway access using a railway traffic control apparatus of a centralized railway control system configured for centralized control of traffic of a centrally controllable railway network including plural railways and a plurality of railway traffic interlocks dispersed in said plural railways constituting said railway network centralized railway control system including (1) providing a user interface of the railway traffic control apparatus, including a block placing part to place a block on one or more specified track sections in any of said plural railways constituting said railway network that is managed by centralized control operation from the railway traffic control apparatus, the railway traffic control apparatus controlling, by said centralized control operation, one or more interlocks

amongst the plurality of railway traffic interlocks dispersed in said plural railways constituting said railway network, to block railway traffic to the specified track sections and thereby to permit a railway field worker to enter the track; (2) generating a removal code, determining an electronic contact address of the railway field worker by accessing a rail personnel contact database registering, for each railway personnel, electronic contact information of the railway personnel, and transmitting the removal code to the electronic contact address of the railway field worker; and (3) permitting the block to said one or more track sections to be removed only upon entry of the removal code by said centralized control operation from the railway traffic control apparatus, such that they infringe one or more claims of the ’835 patent.

50. As a further example, with respect to the ’115 patent, SEPTA’s software and/or hardware systems practice the claimed railway control apparatus for centralized control of a centrally controllable railway network including plural railways and a plurality of railway interlocks dispersed in said plural railways comprises (1) a processor for controlling a plurality of track sections in the railway network, wherein each track section is associated with a corresponding interlock and is disposed in any of said plural railways of said railway network that is managed by centralized control operation from the railway control apparatus, the processor controlling, by said centralized control operation, one or more interlocks amongst the plurality of railway interlocks dispersed in said plural railways of said railway network, to block railway traffic to one or more specified track sections; and (2) a memory device storing computer-executable instructions, wherein execution of the computer-executable instructions by the processor causes the railway control apparatus to: (a) receive a selection of at least one track section amongst the plurality of track sections; (b) transmit a block signal to the corresponding interlock associated with the at least one selected track section, to place a block on the selected

track section by said centralized control operation from the railway control apparatus; (c) generate a secret code associated with the at least one selected track section; and (d) transmit the secret code to a remote user terminal, such that they infringe one or more claims of the '115 patent.

51. Additionally, another large railroad operator, National Railroad Passenger Corporation d/b/a Amtrak ("Amtrak") budgeted $2,405,319 as Northeast Corridor (NEC)-wide expenditure for "implement[ing] the SEPTA and Metro North Enhanced Employee Protection System (EEPS) into the Amtrak CETC [Centralized Electrification and Traffic Control] systems on the NEC" in October 2017 for the fiscal year 2018. (emphasis added).[22]

C.EN.101714. CETC Amtrak System - MOFW Enhanced Employee Protection System (Segment 31). CETC - Enhanced Employee Protection System. This project will implement the SEPTA and Metro North Enhanced Employee Protection System (EEPS) into the Amtrak CETC systems on the NEC.	$2,405,319

52. The "Metro North Enhanced Employee Protection System (EEPS)" is covered by one or more claims of the Asserted Patents, and Metro North is a customer of Railware.

FIRST CLAIM FOR RELIEF

(Infringement of the '782 patent)

53. Railware repeats and incorporates by reference all prior allegations of this Complaint as if fully set forth herein.

54. Railware is the owner by assignment of all rights, title, and interest in and to the '782 patent.

55. The '782 patent is valid and enforceable.

56. Claim 5 of the '782 patent recites:

[22] *Northeast Corridor One-Year Implementation Plan*, NEC COMMISSION 1, 16 (Oct. 2017), http://nec-commission.com/app/uploads/2018/03/NEC-One-Year-Implementation-Plan-FY18.pdf.

A method to enhance railway control, to protect safety of railway workers on or near railway tracks, said method comprising:

> configuring a mobile user device of a railway field worker to provide a device user interface to display information received via a network from a railway control apparatus and to permit the railway field worker to respond to prompts displayed thereon;
>
> providing a terminal user interface on a terminal to permit a terminal user of the terminal request the railway control apparatus to place a block on one or more specified track sections to permit a railway field worker to enter the track sections while blocking railway traffic to said track sections;
>
> generating by the railway control apparatus a release code and transmitting the release code to an electronic contact address accessible by the railway field worker via operation of the user interface of the user terminal; and
>
> permitting the block to said one or more track sections to be removed by the railway control apparatus only upon receiving the release code from the user terminal in return.

57. In violation of 35 U.S.C. § 271(a), SEPTA has infringed and continues to infringe one or more claims of the ’782 patent by making, using, offering for sale, selling, and/or importing in or into the United States a system or method covered by the ’782 patent, including, but not limited to, at least SEPTA’s implementation of the RailwayNet^{SM} system/AIM system and/or other same or similar system.[23]

58. SEPTA, through its implementation of the RailwayNet^{SM} system and AIM system and/or other same or similar system, infringes at least claim 5 of the ’782 patent.

59. SEPTA’s implementation of the RailwayNet^{SM} system/AIM system and/or other same or similar system practices a “method to enhance railway control, to protect safety of railway workers on or near railway tracks.”

60. SEPTA’s implementation of the RailwayNet^{SM} system/AIM system and/or other same or similar system includes an enhanced employee protection system, which protects the

[23] Further investigation may reveal that others of SEPTA’s products and systems also directly or indirectly infringe at least claim 5 and/or other claims of the ’782 patent.

safety of railway workers on or near railway tracks.

61. SEPTA owns and/or operates one or more control centers, including one at 1234 Market Street, Philadelphia, PA 19107.[24] Control centers are centralized railway control systems for controlling trains on certain sections of track. SEPTA implements the RailwayNet^{SM} system/AIM system and/or other same or similar system or method as a SaaS and/or IaaS—a software/infrastructure as a service—product that provides "full-featured network management and infrastructure, hardware, network, operating systems, and applications for fault, performance, security and configuration management."[25]

62. RailwayNet^{SM} is advertised to help facilitate the increases in safety and reliability that train control systems provide.[26]

63. RailwayNet^{SM}/AIM and/or other same or similar system or method, which SEPTA uses, improves rail safety. More particularly, "[t]his system refers to communication-based/processor-based train control technology designed to address a number of rail safety issues, including train-to-train collisions, over-speed derailments, incursions into established work-zone limits, and train movement through a main-line switch that is in an improper position."[27]

---

[24] See *PHOTOS: Inside SEPTA's Last Towers,* THE POSITION LIGHT, https://position-light.blogspot.com/2021/06/photos-inside-septas-towers.html (June 6, 2021).
[25] ROCKWELL COLLINS INC., ARINC RAILWAYNET WHITE PAPER 6 (2016), (available at https://www.rockwellcollins.com/-/media/Files/Unsecure/Services-And-Support/Information-Management/ARINC-Rail/RailwayNet/ARINC-Rail_RailwayNet_white-paper.ashx) [hereinafter referred to as "White Paper"].
[26] *Amtrak signs nationwide contract for Rockwell Collins' ARINC RailwayNet^{SM} Positive Train Control service*, COLLINS AEROSPACE (Sep. 6, 2017) (available at https://rockwellcollins.com/-/media/Files/Unsecure/Services-And-Support/Information-Management/ARINC-Rail/RC_Amtrak-Press-Release_09-06-17.ashx); *RailwayNet Positive Train Control Communication Solution*, WABTEC, https://www.wabteccorp.com/digital-intelligence/signaling-and-train-control/communications/railwaynet-positive-train-control-communication-solution (last visited June 27, 2024).
[27] White Paper at 3.

64. Because SEPTA's implementation of RailwayNet^{SM}/AIM and/or other same or similar system or method increases rail safety through a "communication-based/processor-based train control technology," SEPTA practices a "method to enhance railway control, to protect safety of railway workers on or near railway tracks."

65. SEPTA's implementation of RailwayNet^{SM} system/AIM system and/or other same or similar system or method further "configure[es] a mobile user device of a railway field worker to provide a device user interface to display information received via a network from a railway control apparatus and to permit the railway field worker to respond to prompts displayed thereon."

66. SEPTA's implementation of the RailwayNet^{SM} system/AIM system and/or other same or similar system or method includes providing mobile devices for roadway workers.

67. Amtrak budgeted $2,405,319 as Northeast Corridor (NEC)-wide expenditure for "implement[ing] the SEPTA and Metro North Enhanced Employee Protection System (EEPS)

into the Amtrak CETC [Centralized Electrification and Traffic Control] systems on the NEC" in October 2017 for the fiscal year 2018. (emphasis added).[28]

C.EN.101714. CETC Amtrak System - MOFW Enhanced Employee Protection System (Segment 31). CETC - Enhanced Employee Protection System. This project will implement the SEPTA and Metro North Enhanced Employee Protection System (EEPS) into the Amtrak CETC systems on the NEC.	$2,405,319

68. Amtrak budgeted $224,007 as FY19 Proposed Budget for copying SEPTA's enhanced employee protection system.

All Other Amtrak Programs/Projects – Scopes	FY19 Proposed Budget
C.EN.101714. CETC AMTRAK SYSTEM-MOFW ENHANCED EMPLOYEE PROTECTION SYSTEM. Implement a system to enhance roadway worker protection when working on track under foul time or track out of service. The system will provide roadway workers with an authorization code that corresponds to the blocking protection applied in the CETC control system. Removal of the protection by the CETC train dispatcher will require the authorization code be provided by the roadway worker. The system will utilize modifications to the CETC System platform functionality and mobile devices assigned to roadway workers. Deliverables: • EEPS operating practices documentation; • Modification to each CETC System to provide EEPS functionality: - Wilmington CETC (Mid-Atlantic Division) - Boston CETC (NH to Boston, Springfield Line and MBTA Lines) - NY CETC West - PSCC - CETC Hudson-Albany Line • EEPS mobile devices for roadway workers; • Training program for roadway workers and dispatchers; • Operations management plans and procedures to be used after system acceptance;	$224,007

69. This system includes providing "mobile devices for roadway workers" as a part of its deliverables. It is common knowledge that mobile devices include a user interface for interaction by a user.[29] Amtrak's copy of SEPTA's (and Railware's) system (*i.e.*, a railway control apparatus) provides an authorization code to the railway worker's mobile device. Such communication must happen over a network. Further, the roadway worker must be able to respond to prompts displayed on the mobile device in order to provide the CTC train dispatcher with the authorization code. As noted in the image below, Amtrak's copy of SEPTA's system "require[s] the authorization code be provided by the roadway worker."

[28] *Northeast Corridor One-Year Implementation Plan*, NEC COMMISSION 1, 16 (Oct. 2017), http://nec-commission.com/app/uploads/2018/03/NEC-One-Year-Implementation-Plan-FY18.pdf.
[29] *See, e.g.*, *What is a cell phone?*, LENOVO.COM, https://www.lenovo.com/us/en/glossary/cell-phone/?orgRef=https%253A%252F%252Fwww.google.com%252F (last visited June 27, 2024).

All Other Amtrak Programs/Projects – Scopes	FY19 Proposed Budget
C.EN.101714. CETC AMTRAK SYSTEM-MOFW ENHANCED EMPLOYEE PROTECTION SYSTEM. Implement a system to enhance roadway worker protection when working on track under foul time or track out of service. The system will provide roadway workers with an authorization code that corresponds to the blocking protection applied in the CETC control system. Removal of the protection by the CETC train dispatcher will require the authorization code be provided by the roadway worker. The system will utilize modifications to the CETC System platform functionality and mobile devices assigned to roadway workers. Deliverables: • EEPS operating practices documentation; • Modification to each CETC System to provide EEPS functionality: - Wilmington CETC (Mid-Atlantic Division) - Boston CETC (NH to Boston, Springfield Line and MBTA Lines) - NY CETC West - PSCC - CETC Hudson-Albany Line • EEPS mobile devices for roadway workers; • Training program for roadway workers and dispatchers; • Operations management plans and procedures to be used after system acceptance;	$224,007

70. Amtrak, in copying the RailwayNet[SM]/AIM system or other same or similar system or method used by SEPTA, has purchased mobile devices for its railway workers and implemented a system whereby its CTC system permits users to respond to prompts over a network.[30]

All Other Amtrak Programs/Projects – Scopes	FY19 Proposed Budget
C.EN.101714. CETC AMTRAK SYSTEM-MOFW ENHANCED EMPLOYEE PROTECTION SYSTEM. Implement a system to enhance roadway worker protection when working on track under foul time or track out of service. The system will provide roadway workers with an authorization code that corresponds to the blocking protection applied in the CETC control system. Removal of the protection by the CETC train dispatcher will require the authorization code be provided by the roadway worker. The system will utilize modifications to the CETC System platform functionality and mobile devices assigned to roadway workers. Deliverables: • EEPS operating practices documentation; • Modification to each CETC System to provide EEPS functionality: - Wilmington CETC (Mid-Atlantic Division) - Boston CETC (NH to Boston, Springfield Line and MBTA Lines) - NY CETC West - PSCC - CETC Hudson-Albany Line • EEPS mobile devices for roadway workers; • Training program for roadway workers and dispatchers; • Operations management plans and procedures to be used after system acceptance;	$224,007

71. According to Amtrak's Northeast Corridor Annual Report for fiscal year 2017, Amtrak allocated more than $420,000 in copying SEPTA's enhanced employee protection functionality in the Northeast Corridor through its implementation of RailwayNet[SM] system/AIM

[30] *Northeast Corridor One-Year Implementation Plan Fiscal Year 2019*, NEC COMMISSION 1, 233 (Oct. 2018), https://nec-commission.com/app/uploads/2018/10/NEC-One-Year-Plan-FY19.pdf [hereinafter referred to as "*NEC One-Year Plan 2019*"].

system or other same or similar system or method.[31] It also specifies providing back-office infrastructure and messaging, including "[s]torage and delivery of crew and consist information, train IDs and clearances."[32]

C.EN.101711	FEN AMTRAK NEC - FENCE UPGRADES	3,082,806	1,446,696		
C.EN.101713	RAIL AMTRAK NEC - INSULATED JOINT REPLACEMENT PROGRAM	2,577,715	1,168,866	38,720	
C.EN.101714	CETC AMTRAK SYSTEM-MOFW ENHANCED EMPLOYEE PROTECTION SYSTEM	421,503	409,692		
C.EN.101732	RAD AMTRAK NEC - RADIO SYSTEM UPGRADES	-	-		
C.EN.101737	STA PENN STATION NY - STATION CHILLED WATER SYSTEM UPGRADE	-	-		
C.EN.201034	ACSE AMTRAK OWNED-POSITIVE TRAIN CONTROL PTC INSTALLATION	3,150,755	3,023,578		
C.EN.201264	POLE ZOO TO PAOLI - CATENARY STRUCTURE REPLACEMENT DESIGN	71,846	12,551		
C.TR.100074	STA NEW ENGLAND DIV - INSTALL TRAIN APPROACH MESSAGE SYS	286,337	133,789	152,547	

Northeast Corridor Commission | 49

72. SEPTA's implementation of the RailwayNet^{SM} system/AIM system and/or other same or similar system or method provides information (*e.g.,* an authorization code) to the railway worker's mobile device. Such communication happens over a network.[33] Further, the roadway worker is able to respond to prompts displayed on the mobile device in order to provide the CTC train dispatcher with the authorization code.

73. SEPTA's implementation of the RailwayNet^{SM}/AIM system and/or other same or similar system or method requires the authorization code be provided by the roadway worker.

[31] *Northeast Corridor Annual Report: Operations and Infrastructure*, NEC COMMISSION 1, 49 (April 2018), https://nec-commission.com/app/uploads/2018/04/NEC-Annual-Report-FY17.pdf.
[32] White Paper at 7.

74. The RailwayNet[SM]/AIM system or other same or similar system or method supports I-ETMS message flows, including communications with railway workers to communicate crew verification and mandatory directives.[34]

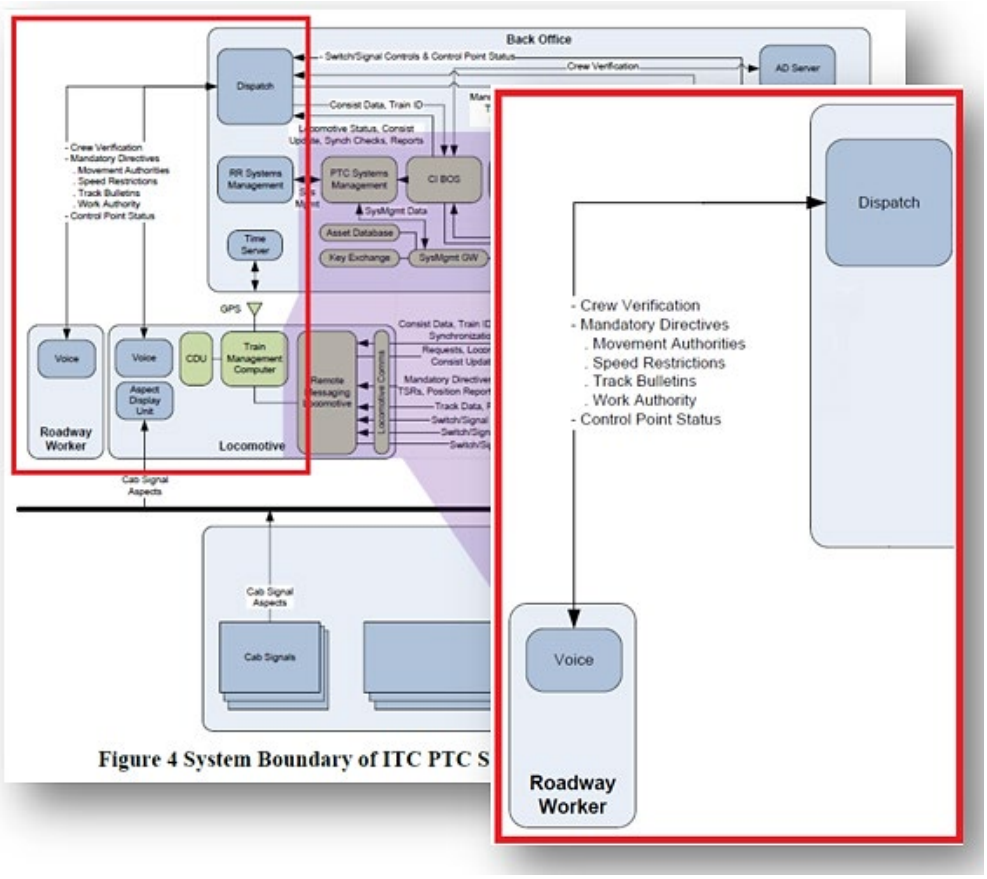

75. Likewise, Wabtec acknowledges that it offers I-ETMS supported packages.[35] Wabtec also advertise that RailwayNet[SM] "offers reliable, tailored, and scalable PTC messaging. Utilizing VHF, cellular, Wi-Fi and MPLS, RailwayNet[SM] PTC delivers initialization messages, crew . . . ."[36]

---

[34] *Positive Train Control Interoperability and Networking Research: Final Report*, Fed. Railroad Admin (Dec. 2015) at 14 [hereinafter referred to as "Final Report"].

[35] *I-ETMS Positive Train Control (PTC) Communications Package*, WABTEC, https://www.wabteccorp.com/digital-intelligence/signaling-and-train-control/communications/i-etms-positive-train-control-ptc-communications-package (last visited June 27, 2024).

[36] *RailwayNet Positive Train Control Communication Solution*, WABTEC, https://www.wabteccorp.com/digital-intelligence/signaling-and-train-control/communications/railwaynet-positive-train-control-communication-solution (last visited June 27, 2024).

76. Accordingly, SEPTA's implementation of RailwayNet^{SM}/AIM and/or other same or similar system or method, by providing a technology infrastructure to send and receive messages via a network and by providing mobile devices to rail workers, practices a method that "configure[es] a mobile user device of a railway field worker to provide a device user interface to display information received via a network from a railway control apparatus and to permit the railway field worker to respond to prompts displayed thereon."

77. SEPTA's implementation of RailwayNet^{SM} system/AIM system and/or other same or similar system or method further provides "a terminal user interface on a terminal to permit a terminal user of the terminal request the railway control apparatus to place a block on one or more specified track sections to permit a railway field worker to enter the track sections while blocking railway traffic to said track sections."

78. SEPTA operates a control center that is "a centralized facility that manages the safe and efficient movement of all of SEPTA's operating modes and provides customer service alerts to our passengers."[37] "The Railroad Control Center utilizes a Centralized Train Control System to provide realtime information and control functions to the 19th floor. Six (6) train dispatchers have the responsibility to operate switches and display signals on SEPTA-controlled territory, managing the movement of 780 scheduled trains a day."[38] The train dispatchers operate those switches and display signals through "a terminal user interface on a terminal to permit a terminal user of the terminal request the railway control apparatus to place a block on one or more specified track sections to permit a railway field worker to enter the track sections while blocking railway traffic to said track sections."

---

[37] *Fiscal Year 2018 Operating Budget*, SEPTA (available at https://planning.septa.org/wp-content/uploads/2022/07/Operating-Budget-FY2018.pdf) at 97-98.
[38] *Id.* at 98.

79. SEPTA's control center, shown below,[39] includes a number of user terminals through which train dispatchers control the movement of trains, including by placing blocks on specified track sections:

80. The "RailwayNet[SM] integrations server and software provides connectivity between the railroad IT systems and the hosted back-office components."[40] The integration server provides a terminal user interface on a terminal for use by the system dispatcher.

[39] Pratima Bhattacharyya, *Reporter's Notebook: Taking a look at SEPTA control,* DAILY PENNSYLVANIAN (Oct. 5, 2010), https://www.thedp.com/article/2010/10/reporters_notebook_taking_a_look_at_septa_control.
[40] *See* White Paper at 8 (illustrating "AIM® integration server"); *see also RailwayNet Positive Train Control Communication Solution*, WABTEC, https://www.wabteccorp.com/digital-intelligence/signaling-and-train-control/communications/railwaynet-positive-train-control-communication-solution (last visited June 27, 2024).

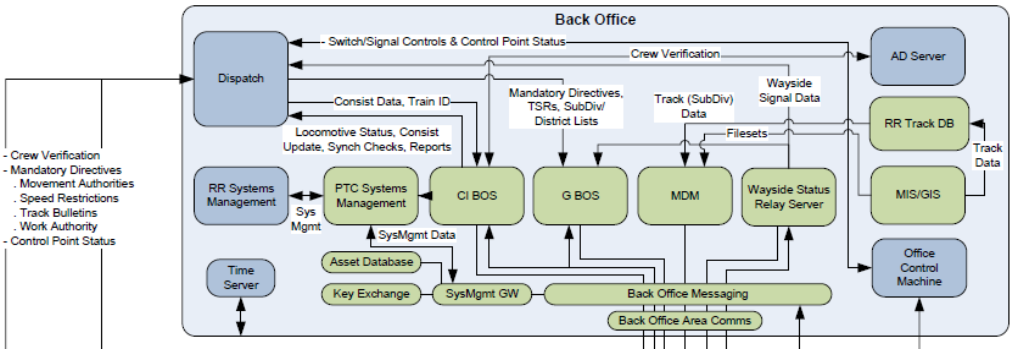

AIM® integration server

The ARINC RailwayNet integrations server and software provides connectivity between the railroad IT systems and the hosted back-office components. The functions of this application include:

- Interface with customer's IT gateway
- Interface with back office
- Manage crew authentication through the customer's IT gateway
- Functions to assign train ID to trains based on the clearance number
- Functions to manage train consist through the customer's IT gateway
- Functions to track, display, and store events and alarms

Centralized Traffic Control and SCADA

Collins designs and integrates state-of-the-art rail control solutions using our ARINC Advanced Information Management (AIM®) platform. AIM serves as an end-to-end solution for all rail control requirements, including SCADA, Centralized Traffic Control, Positive Train Control (PTC) and control center integration. Highly flexible and feature-rich, AIM enables railroads to maximize operational efficiency, cost-effectiveness and safety, all while providing an environment protected by the latest tools and techniques in cybersecurity.

KEY AREAS OF EXPERTISE

- Train monitoring and control
- Automatic train tracking
- Automatic route setting/ automatic routing
- Automatic traffic regulation and schedule deviation
- Schedule management
- Integrated yard management
- Bulletins, authorities and restrictions management
- Employee in Charge (EIC) terminals
- Emergency Operating Procedures (EOP)
- Power planning
- Playback and simulation
- Data acquisition
- Interface integration

81. The RailwayNet^{SM}/AIM system or other same or similar system or method, as implemented by SEPTA, provides the network connections and office applications required to exchange critical information among railroads. It is available on a subscription basis as hosted SaaS (software as a service) and IaaS (infrastructure as a service) solutions and messaging from

the back office to the locomotive through VHF, cellular, and Wi-Fi is also available.[41]

82. Amtrak budgeted an additional $224,007 as FY19 Proposed Budget for copying SEPTA's system to enhance railway worker protection when working on track under foul time or track out of service.

All Other Amtrak Programs/Projects – Scopes	FY19 Proposed Budget
C.EN.101714. CETC AMTRAK SYSTEM-MOFW ENHANCED EMPLOYEE PROTECTION SYSTEM. Implement a system to enhance roadway worker protection when working on track under foul time or track out of service. The system will provide roadway workers with an authorization code that corresponds to the blocking protection applied in the CETC control system. Removal of the protection by the CETC train dispatcher will require the authorization code be provided by the roadway worker. The system will utilize modifications to the CETC System platform functionality and mobile devices assigned to roadway workers. Deliverables: • EEPS operating practices documentation; • Modification to each CETC System to provide EEPS functionality: - Wilmington CETC (Mid-Atlantic Division) - Boston CETC (NH to Boston, Springfield Line and MBTA Lines) - NY CETC West - PSCC - CETC Hudson-Albany Line • EEPS mobile devices for roadway workers; • Training program for roadway workers and dispatchers; • Operations management plans and procedures to be used after system acceptance;	$224,007

83. The RailwayNet[SM] system/AIM system or other same or similar system or method provides "train monitoring and control," "automatic route setting/automatic routing," "automatic traffic regulation," and "bulletins, authorities, and restrictions management," as shown in the image below.[42] One or more of these functionalities encompasses the claimed limitation "to place a block on one or more specified track sections to permit a railway field worker to enter the track sections while blocking railway traffic to said track sections."

---

[41] *New from Rockwell Collins: Shared-network PTC platform*, RAILWAY AGE 14 (July 2016), https://issuu.com/railwayage/docs/july_2016_railway_age; *RailwayNet Positive Train Control Communication Solution*, WABTEC, https://www.wabteccorp.com/digital-intelligence/signaling-and-train-control/communications/railwaynet-positive-train-control-communication-solution (last visited June 27, 2024).

[42] *Intelligence-Based Rail Solutions*, Collins Aerospace, https://web.archive.org/web/20211122013021/https://www.collinsaerospace.com/-/media/project/collinsaerospace/collinsaerospace-website/product-assets/marketing/r/rail/arinc-rail-solutions-for-passengers.pdf?rev=e7e5ddbff2de4154ba265f03e27f14d3; *see also Advanced Information Management (AIM) Rail Dispatch*, WABTEC, https://www.wabteccorp.com/digital-intelligence/signaling-and-train-control/dispatch/advanced-information-management-aim-rail-dispatch (last visited June 27, 2024).

Centralized Traffic Control and SCADA

Collins designs and integrates state-of-the-art rail control solutions using our ARINC Advanced Information Management (AIM®) platform. AIM serves as an end-to-end solution for all rail control requirements, including SCADA, Centralized Traffic Control, Positive Train Control (PTC) and control center integration. Highly flexible and feature-rich, AIM enables railroads to maximize operational efficiency, cost-effectiveness and safety, all while providing an environment protected by the latest tools and techniques in cybersecurity.

KEY AREAS OF EXPERTISE

- Train monitoring and control
- Automatic train tracking
- Automatic route setting/ automatic routing
- Automatic traffic regulation and schedule deviation
- Schedule management
- Integrated yard management
- Bulletins, authorities and restrictions management
- Employee in Charge (EIC) terminals
- Emergency Operating Procedures (EOP)
- Power planning
- Playback and simulation
- Data acquisition
- Interface integration

84. Amtrak budgeted $224,007 as FY19 Proposed Budget for copying SEPTA's enhanced employee protection system.

All Other Amtrak Programs/Projects – Scopes	FY19 Proposed Budget
C.EN.101714. CETC AMTRAK SYSTEM-MOFW ENHANCED EMPLOYEE PROTECTION SYSTEM. Implement a system to enhance roadway worker protection when working on track under foul time or track out of service. The system will provide roadway workers with an authorization code that corresponds to the blocking protection applied in the CETC control system. Removal of the protection by the CETC train dispatcher will require the authorization code be provided by the roadway worker. The system will utilize modifications to the CETC System platform functionality and mobile devices assigned to roadway workers. Deliverables: • EEPS operating practices documentation; • Modification to each CETC System to provide EEPS functionality: - Wilmington CETC (Mid-Atlantic Division) - Boston CETC (NH to Boston, Springfield Line and MBTA Lines) - NY CETC West - PSCC - CETC Hudson-Albany Line • EEPS mobile devices for roadway workers; • Training program for roadway workers and dispatchers; • Operations management plans and procedures to be used after system acceptance;	$224,007

85. The RailwayNet^{SM}/AIM system and/or other same or similar system or method, as implemented by SEPTA, that places track sections in "foul time" necessarily "permit a terminal user of the terminal request the railway control apparatus to place a block on one or

more specified track sections to permit a railway field worker to enter the track sections while blocking railway traffic to said track sections" as recited in this claim element. Specifically, FRA regulations 49 C.F.R. § 214.323 defines "foul time" as "a method of establishing working limits on controlled track in which a roadway worker is notified by the train dispatcher or control operator that *no trains will operate within a specific segment of controlled track until the roadway worker reports clear of the track*." Because SEPTA, through its implementation of the RailwayNet^{SM}/AIM system and/or other same or similar system or method, has the ability to place tracks in foul time, it practices the claimed method "to place a block on one or more specified track sections to permit a railway field worker to enter the track sections while blocking railway traffic to said track sections."

86. In order to comply with and implement FRA's recommendations in its regulations (communication-based/processor-based train control technology designed to address a number of railway safety issues including train-to-train collisions, over-speed derailments, incursions into established work-zone limits, and train movement through a main-line switch that is in an improper position), RailwayNet^{SM}/AIM system and/or other same or similar system or method must be configured to place a block on one or more sections of railway track to prevent trains from traversing the one or more sections of railway track.[43]

87. Accordingly, by permitting the train dispatcher to place a track under foul time, the RailwayNet^{SM}/AIM system and/or other same or similar system or method, as implemented by SEPTA, "permit[s] a terminal user of the terminal request the railway control apparatus to place a block on one or more specified track sections to permit a railway field worker to enter the track sections while blocking railway traffic to said track sections."

[43] *See* Final Report at 14; *see also NEC One-Year Plan* 2019 at 233.

88. SEPTA's implementation of the RailwayNet^{SM}/AIM system and/or other same or similar system or method further generates "by the railway control apparatus a release code and transmit[s] the release code to an electronic contact address accessible by the railway field worker via operation of the user interface of the user terminal."

89. According to Amtrak's 2019 FY plan, it copied SEPTA's enhanced employee protection system that operates by "provid[ing] roadway workers with an authorization code that corresponds to the blocking protection applied in the . . . [CTC] control system. Removal of the protection by the . . . [CTC] train dispatcher will require the authorization code to be provided by the roadway worker."[44]

90. In a report submitted to the U.S. Department of Transportation, it was illustrated that the claimed railway control apparatus as the "back office" in the below diagram.[45]

[44] *NEC One-Year Plan 2019* at 233.
[45] Final Report at 11.

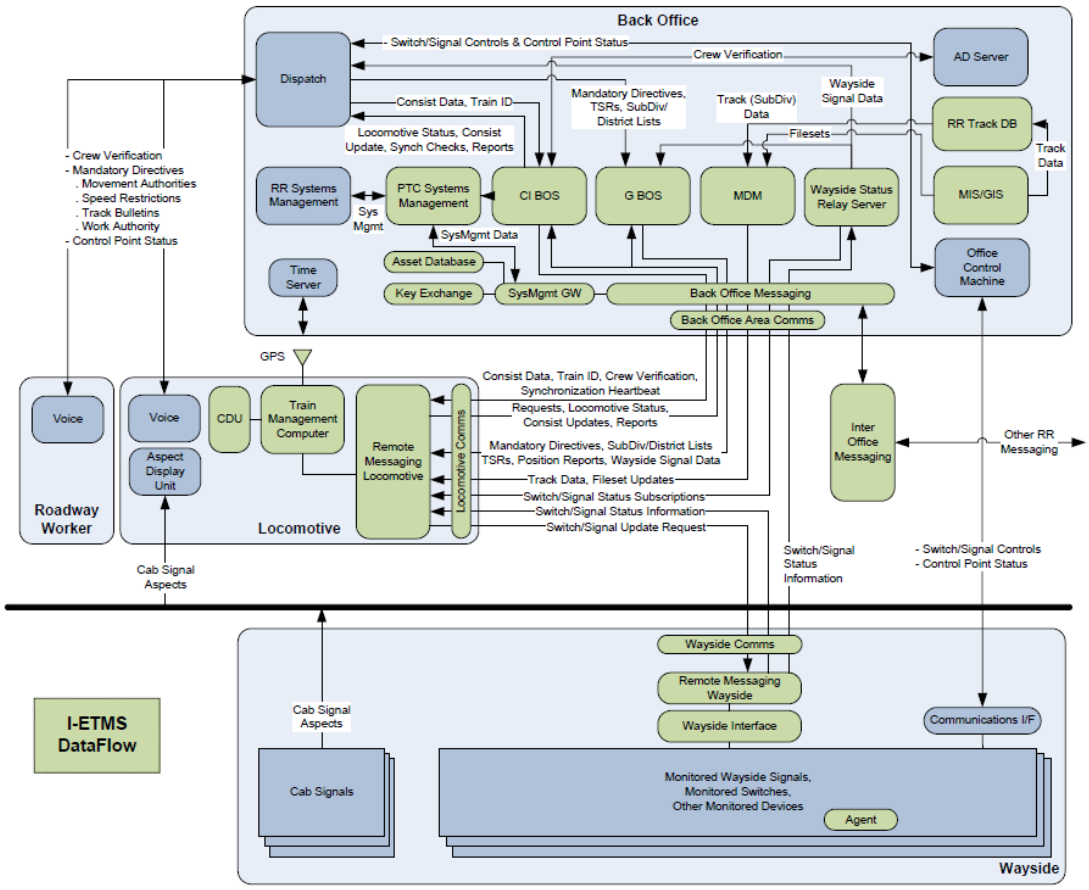

Figure 2 I-ETMS PTC Message Flows

91. Amtrak budgeted $224,007 as FY19 Proposed Budget for copying SEPTA's enhanced employee protection system that will "provide roadway workers with an authorization code that corresponds to the blocking protection applied in the . . . [CTC] control system."[46]

[46] *NEC One-Year Plan 2019* at 233.

All Other Amtrak Programs/Projects – Scopes	FY19 Proposed Budget
C.EN.101714. CETC AMTRAK SYSTEM-MOFW ENHANCED EMPLOYEE PROTECTION SYSTEM. Implement a system to enhance roadway worker protection when working on track under foul time or track out of service. The system will provide roadway workers with an authorization code that corresponds to the blocking protection applied in the CETC control system. Removal of the protection by the CETC train dispatcher will require the authorization code be provided by the roadway worker. The system will utilize modifications to the CETC System platform functionality and mobile devices assigned to roadway workers. Deliverables: • EEPS operating practices documentation; • Modification to each CETC System to provide EEPS functionality: - Wilmington CETC (Mid-Atlantic Division) - Boston CETC (NH to Boston, Springfield Line and MBTA Lines) - NY CETC West - PSCC - CETC Hudson-Albany Line • EEPS mobile devices for roadway workers; • Training program for roadway workers and dispatchers; • Operations management plans and procedures to be used after system acceptance;	$224,007

92. Amtrak's copy of SEPTA's system provides (*i.e.*, transmits to) railway workers with an authorization code that corresponds to the blocking protection applied in the CTC control system. Removal of the protection by the CTC train dispatcher requires that the authorization code be provided by the railway worker. The system also utilizes modifications to the CTC System platform functionality and mobile devices assigned to railway workers. The deliverable to Amtrak included modification to each CTC system to provide enhanced employee protection functionality in numerous CTC systems, as well as included mobile devices for railway workers; enhanced employee protection operating practices documentation; training program for railway workers and dispatchers; and operations management plans and procedures to be used after system acceptance.[47]

93. The RailwayNet^{SM} system/AIM system and/or other same or similar system or method, as implemented by SEPTA, specifies providing back office infrastructure and messaging, including "[s]torage and delivery of crew and consist information, train IDs and

[47] *Id.*

clearances."[48] It further specifies enabling compliance with I-ETMS systems.[49] Because I-ETMS systems require communication of crew verification and employee authentication, SEPTA maintains electronic contact addresses of the railway field workers from a rail personnel contact database. RailwayNet^{SM}/AIM system and/or other same or similar system or method messaging functions also include: "[k]ey exchange server," described as "[s]ecurity keys with data store."[50]

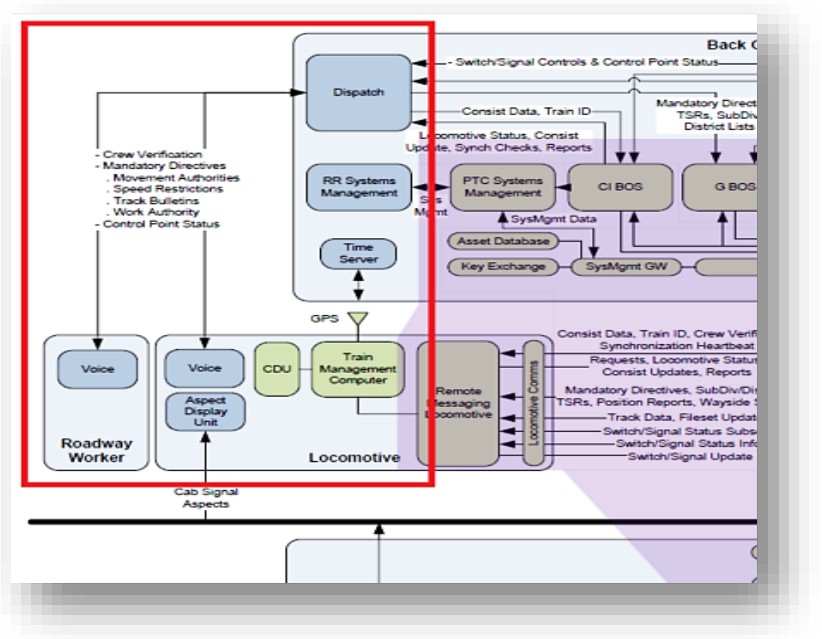

94. Accordingly, since SEPTA's implementation of the RailwayNet^{SM}/AIM system and/or other same or similar system or method provides roadway workers with an authorization code that corresponds to the blocking protection applied in the control system, SEPTA practices the step of "generating by the railway control apparatus a release code and transmitting the release code to an electronic contact address accessible by the railway field worker via operation of the user interface of the user terminal."

---

[48] *See* White Paper at 7; *see also Advanced Information Management (AIM) Rail Dispatch*, WABTEC, https://www.wabteccorp.com/digital-intelligence/signaling-and-train-control/dispatch/advanced-information-management-aim-rail-dispatch (last visited June 27, 2024) (similar advertisements from Wabtec).
[49] *See* Final Report at 43.
[50] White Paper at 7.

95. SEPTA's implementation of the RailwayNet[SM]/AIM system and/or other same or similar system or method permits "the block to said one or more track sections to be removed by the railway control apparatus only upon receiving the release code from the user terminal in return."

96. Amtrak's copy of SEPTA's enhanced employee protection system requires the dispatcher to enter the "authorization code" in order to remove the protection (*e.g.*, the foul time) from the track.[51]

All Other Amtrak Programs/Projects – Scopes	FY19 Proposed Budget
C.EN.101714. CETC AMTRAK SYSTEM-MOFW ENHANCED EMPLOYEE PROTECTION SYSTEM. Implement a system to enhance roadway worker protection when working on track under foul time or track out of service. The system will provide roadway workers with an authorization code that corresponds to the blocking protection applied in the CETC control system. Removal of the protection by the CETC train dispatcher will require the authorization code be provided by the roadway worker. The system will utilize modifications to the CETC System platform functionality and mobile devices assigned to roadway workers. Deliverables: • EEPS operating practices documentation; • Modification to each CETC System to provide EEPS functionality: - Wilmington CETC (Mid-Atlantic Division) - Boston CETC (NH to Boston, Springfield Line and MBTA Lines) - NY CETC West - PSCC - CETC Hudson-Albany Line • EEPS mobile devices for roadway workers; • Training program for roadway workers and dispatchers; • Operations management plans and procedures to be used after system acceptance;	$224,007

97. The FRA has recognized that systems such as the enhanced employee protection system implemented by SEPTA via the RailwayNet[SM] system/AIM system and/or other same or similar system or method complies with applicable recommended regulations (communication-based/processor-based train control technology designed to address a number of rail safety issues including train-to-train collisions, over-speed derailments, incursions into established work-zone limits, and train movement through a main-line switch that is in an improper position), by providing that the "dispatching system will not allow a dispatcher to release controlled track working limits until the RWIC affirmatively indicates via an electronic prompt that he or she is

[51] *NEC One-Year Plan 2019* at 233.

releasing working limits authority."[52]

98. Accordingly, SEPTA's implementation of the RailwayNet^{SM} system/AIM system and/or other same or similar system or method thus permits "the block to said one or more track sections to be removed by the railway control apparatus only upon receiving the release code from the user terminal in return."

99. Therefore, SEPTA, through its implementation of the RailwayNet^{SM}/AIM systems and/or other same or similar system or method has infringed and continues to infringe at least claim 5 of the '782 patent.

100. As direct and proximate result of SEPTA's infringement of the '782 patent, Railware has been injured and has been caused significant harm and financial damages.

101. SEPTA has also induced and continues to induce infringement of at least claim 5 of the '782 patent in violation of 35 U.S.C. § 271(b).

102. SEPTA induces its users, and/or developers of its systems to infringe at least claim 5 of the '782 patent, and does so with the specific intent, by providing instructions, directions, information, and/or knowledge on how to use its systems and/or incorporate its systems into other products (including both the RailwayNet^{SM}/AIM and/or same or similar systems or methods). For example, SEPTA instructs its dispatchers on how to use the system to infringe.

103. To the extent the marking requirements of 35 U.S.C. § 287 apply, SEPTA has had constructive knowledge of the '782 patent at least since February 1, 2017. SEPTA's continued infringement on or after this date is in spite of the objectively high likelihood that its activities constitute infringement of a valid patent, and this risk was either known or so obvious that it

[52] *Railroad Workplace Safety; Roadway Worker Protection Miscellaneous Revisions (RRR)*, FRA-2008-0086 (May 27, 2016) at 81, https://www.fra.dot.gov/eLib/Details/L17467 [hereinafter referred to as "RRR"].

should have been known to SEPTA. Thus, SEPTA's continued infringement at least as of February 1, 2017 is willful and deliberate.

104. Railware has suffered and continues to suffer damages and irreparable harm as a result of SEPTA's past and ongoing infringement. Unless and until SEPTA's infringement is enjoined, Railware will continue to be damaged and irreparably harmed.

105. Railware is entitled to all remedies at law and equity including, but not limited to, an injunction against SEPTA's infringement of the '782 patent pursuant to 35 U.S.C. § 283.

106. Railware is entitled to damages for SEPTA's infringement of the '782 patent including, but not limited to, damages pursuant to 35 U.S.C. §§ 284 and 285.

SECOND CLAIM FOR RELIEF

(Infringement of the '835 patent)

107. Railware repeats and incorporates by reference all prior allegations of this Complaint as if fully set forth herein.

108. Railware is the owner by assignment of all rights, title, and interest in and to the '835 patent.

109. The '835 patent is valid and enforceable.

110. Claim 19 of the '835 patent recites:

> A method for controlling railway access using a railway traffic control apparatus of a centralized railway control system configured for centralized control of traffic of a centrally controllable railway network including plural railways and a plurality of railway traffic interlocks dispersed in said plural railways constituting said railway network, the method comprising:
>
> > providing a user interface of the railway traffic control apparatus, including a block placing part to place a block on one or more specified track sections in any of said plural railways constituting said railway network that is managed by centralized control operation from the railway traffic control apparatus, the railway traffic control apparatus controlling, by said centralized control operation, one or more interlocks amongst the plurality of railway traffic interlocks dispersed in said plural railways constituting

> said railway network, to block railway traffic to the specified track sections and thereby to permit a railway field worker to enter the track sections;
>
> generating a removal code, determining an electronic contact address of the railway field worker by accessing a rail personnel contact database registering, for each railway personnel, electronic contact information of the railway personnel, and transmitting the removal code to the electronic contact address of the railway field worker; and
>
> permitting the block to said one or more track sections to be removed only upon entry of the removal by said centralized control operation from the railway traffic control apparatus.

111. In violation of 35 U.S.C. § 271(a), SEPTA has infringed and continues to infringe one or more claims of the ’835 patent by making, using, offering for sale, selling, and/or importing in or into the United States a system or method covered by the ’835 patent, including, but not limited to, at least SEPTA’s implementation and/or use of the RailwayNet^{SM} system/AIM system and/or other same or similar system or method.[53]

112. SEPTA’s implementation of the RailwayNet^{SM} system/AIM system and/or other same or similar system includes an enhanced employee protection functionality, which protects the safety of railway workers on or near railway tracks.

113. SEPTA, through its implementation and/or use of the RailwayNet^{SM} system/AIM system and/or other same or similar system or method, infringes at least claim 19 of the ’835 patent.

114. SEPTA’s implementation of the RailwayNet^{SM} system/AIM system and/or other same or similar system or method practices a “method for controlling railway access using a railway traffic control apparatus of a centralized railway control system configured for centralized control of traffic of a centrally controllable railway network including plural railways

[53] Further investigation may reveal that others of SEPTA’s products and systems also directly or indirectly infringe at least claim 19 or other claims of the ’835 patent.

and a plurality of railway traffic interlocks dispersed in said plural railways constituting said railway network."

115. SEPTA owns and/or operates control centers, including one at 1234 Market Street, Philadelphia, PA 19107.[54] Control centers are centralized railway control systems using methods to control access to railway tracks configured for centralized control of traffic of a centrally controllable railway network including plural railways and a plurality of railway traffic interlocks dispersed in said plural railways constituting said railway network.

116. SEPTA's control center, shown below,[55] includes a number of user terminals through which train dispatchers control the movement of trains, including by placing blocks on specified track sections:

[54] *See PHOTOS: Inside SEPTA's Last Towers,* The Position Light, https://position-light.blogspot.com/2021/06/photos-inside-septas-towers.html (June 6, 2021).
[55] Pratima Bhattacharyya, *Reporter's Notebook: Taking a look at SEPTA control,* DAILY PENNSYLVANIAN (Oct. 5, 2010), https://www.thedp.com/article/2010/10/reporters_notebook_taking_a_look_at_septa_control.

117. SEPTA describes its control center as "a centralized facility that manages the safe and efficient movement of all of SEPTA's operating modes and provides customer service alerts to our passengers."[56] The control center functions include, *inter alia*, "Railroad Control" whereby "[t]he Railroad Control Center utilizes a Centralized Train Control System to provide realtime information and control functions to the 19th floor. Six (6) train dispatchers have the responsibility to operate switches and display signals on SEPTA-controlled territory, managing the movement of 780 scheduled trains a day."[57]

118. The RailwayNet^{SM} system/AIM system and/or other same or similar system or method provides "centralized traffic control," "train monitoring and control," "automatic route

[56] *Fiscal Year 2018 Operating Budget*, SEPTA (available at https://planning.septa.org/wp-content/uploads/2022/07/Operating-Budget-FY2018.pdf) at 97-98.
[57] *Id.* at 98.

setting/automatic routing," "automatic traffic regulation," and "bulletins, authorities," and "restrictions management."[58]

Centralized Traffic Control and SCADA

Collins designs and integrates state-of-the-art rail control solutions using our ARINC Advanced Information Management (AIM®) platform. AIM serves as an end-to-end solution for all rail control requirements, including SCADA, Centralized Traffic Control, Positive Train Control (PTC) and control center integration. Highly flexible and feature-rich, AIM enables railroads to maximize operational efficiency, cost-effectiveness and safety, all while providing an environment protected by the latest tools and techniques in cybersecurity.

KEY AREAS OF EXPERTISE

- Train monitoring and control
- Automatic train tracking
- Automatic route setting/ automatic routing
- Automatic traffic regulation and schedule deviation
- Schedule management
- Integrated yard management
- Bulletins, authorities and restrictions management
- Employee in Charge (EIC) terminals
- Emergency Operating Procedures (EOP)
- Power planning
- Playback and simulation
- Data acquisition
- Interface integration

119. SEPTA implemented the RailwayNet^{SM}/AIM system and/or other same or similar system or method as a SaaS and/or IaaS—a software/infrastructure as a service—product that provides "full-featured network management and infrastructure, hardware, network, operating systems, and applications for fault, performance, security and configuration management."[59] SEPTA has further implemented the RailwayNet^{SM}/AIM system and/or other same or similar

[58] *Intelligence-Based Rail Solutions*, Collins Aerospace, https://web.archive.org/web/20211122013021/https://www.collinsaerospace.com/-/media/project/collinsaerospace/collinsaerospace-website/product-assets/marketing/r/rail/arinc-rail-solutions-for-passengers.pdf?rev=e7e5ddbff2de4154ba265f03e27f14d3; *see also Advanced Information Management (AIM) Rail Dispatch*, WABTEC, https://www.wabteccorp.com/digital-intelligence/signaling-and-train-control/dispatch/advanced-information-management-aim-rail-dispatch (last visited June 27, 2024).
[59] White Paper at 6.

system or method.

120. RailwayNet^{SM} is advertised to help facilitate the increases in safety and reliability in train control systems.[60]

121. RailwayNet^{SM}/AIM system and/or same or similar system or method, which SEPTA uses, improves rail safety. More particularly, "[t]his system refers to communication-based/processor-based train control technology designed to address a number of rail safety issues, including train-to-train collisions, over-speed derailments, incursions into established work-zone limits, and train movement through a main-line switch that is in an improper position."[61]

122. RailwayNet^{SM} was implemented throughout SEPTA's routes.

123. As explained below, RailwayNet^{SM} is a hosted network, messaging and application platform, designed to assist operators in meeting the requirements mandated by the

[60] *See, e.g., Amtrak signs nationwide contract for Rockwell Collins' ARINC RailwayNet^{SM} Positive Train Control service*, COLLINS AEROSPACE (Sep. 6, 2017), https://rockwellcollins.com/-/media/Files/Unsecure/Services-And-Support/Information-Management/ARINC-Rail/RC_Amtrak-Press-Release_09-06-17.ashx; *RailwayNet Positive Train Control Communication Solution*, WABTEC, https://www.wabteccorp.com/digital-intelligence/signaling-and-train-control/communications/railwaynet-positive-train-control-communication-solution (last visited June 27, 2024).
[61] White Paper at 3.

Rail Safety Improvement Act of 2008 (the "Act"). The Act directs the Federal Railroad Administration (FRA) to mandate new regulations focused on railroad safety. When used in conjunction with the operator's train control infrastructure, RailwayNet^{SM} helps facilitate the increases in safety and reliability.[62]

124. The "RailwayNet^{SM} integrations server and software provides connectivity between the railroad IT systems and the hosted back-office components."[63] The integration server provides an interface with various system components.

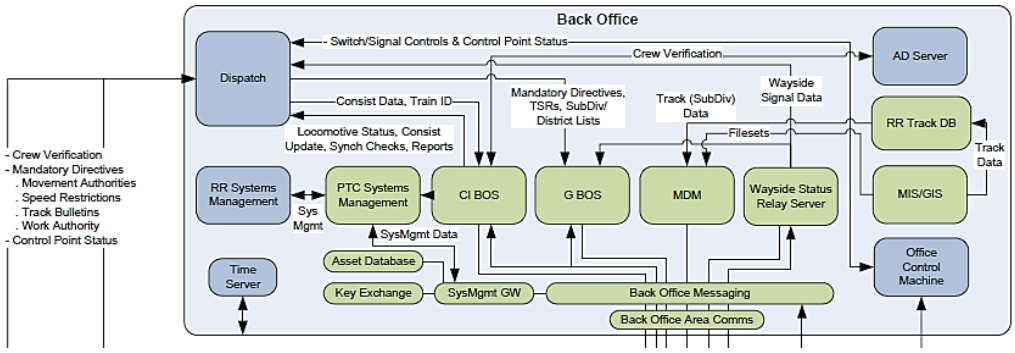

[62] *See, e.g., Amtrak signs nationwide contract for Rockwell Collins' ARINC RailwayNet^{SM} Positive Train Control service*, COLLINS AEROSPACE (Sep. 6, 2017), https://rockwellcollins.com/-/media/Files/Unsecure/Services-And-Support/Information-Management/ARINC-Rail/RC_Amtrak-Press-Release_09-06-17.ashx.
[63] *See* White Paper at 8 (illustrating "AIM® integration server").

AIM® integration server

The ARINC RailwayNet integrations server and software provides connectivity between the railroad IT systems and the hosted back-office components. The functions of this application include:

- Interface with customer's IT gateway
- Interface with back office
- Manage crew authentication through the customer's IT gateway
- Functions to assign train ID to trains based on the clearance number
- Functions to manage train consist through the customer's IT gateway
- Functions to track, display, and store events and alarms

Centralized Traffic Control and SCADA

Collins designs and integrates state-of-the-art rail control solutions using our ARINC Advanced Information Management (AIM®) platform. AIM serves as an end-to-end solution for all rail control requirements, including SCADA, Centralized Traffic Control, Positive Train Control (PTC) and control center integration. Highly flexible and feature-rich, AIM enables railroads to maximize operational efficiency, cost-effectiveness and safety, all while providing an environment protected by the latest tools and techniques in cybersecurity.

KEY AREAS OF EXPERTISE

- Train monitoring and control
- Automatic train tracking
- Automatic route setting/ automatic routing
- Automatic traffic regulation and schedule deviation
- Schedule management
- Integrated yard management
- Bulletins, authorities and restrictions management
- Employee in Charge (EIC) terminals
- Emergency Operating Procedures (EOP)
- Power planning
- Playback and simulation
- Data acquisition
- Interface integration

125. The RailwayNet^{SM}/AIM system and/or other same or similar system or method, implemented by SEPTA, provides the network connections and office applications required to exchange critical information among railroads. It is available on a subscription basis as hosted SaaS (software as a service) and IaaS (infrastructure as a service) solutions, and messaging from the back office to the locomotive through VHF, cellular, and Wi-Fi is also available.[64]

126. The RailwayNet^{SM}/AIM system and/or other same or similar system or method, as implemented by SEPTA, further controls plural railways and a plurality of railway traffic interlocks. Specifically, Centralized Train Control systems, such as that employed by SEPTA and its implementation of the RailwayNet^{SM}/AIM and/or other same or similar system or method

[64] *New from Rockwell Collins: Shared-network PTC platform*, RAILWAY AGE 14 (July 2016), https://issuu.com/railwayage/docs/july_2016_railway_age; *RailwayNet Positive Train Control Communication Solution*, WABTEC, https://www.wabteccorp.com/digital-intelligence/signaling-and-train-control/communications/railwaynet-positive-train-control-communication-solution (last visited June 27, 2024).

"consists of a centralized train dispatcher's office that controls railroad interlocking and traffic flows in portions of the rail system designated as CTC territory."[65] Train dispatchers in the control center have control over all interlockings on SEPTA's railroads.[66]

127. SEPTA implemented the RailwayNet^{SM}/AIM system and/or other same or similar system or method—a hosted network, messaging and application platform as amended—on SEPTA's railroads, including any commuter and freight routes that host SEPTA services.

128. Accordingly, SEPTA's implementation of the RailwayNet^{SM}/AIM system and/or other same or similar system or method practices a "method for controlling railway access using a railway traffic control apparatus of a centralized railway control system configured for centralized control of traffic of a centrally controllable railway network including plural railways and a plurality of railway traffic interlocks dispersed in said plural railways constituting said railway network."

129. SEPTA's implementation of the RailwayNet^{SM}/AIM system and/or other same or similar system or method provides "a user interface of the railway traffic control apparatus, including a block placing part to place a block on one or more specified track sections in any of said plural railways constituting said railway network that is managed by centralized control operation from the railway traffic control apparatus, the railway traffic control apparatus controlling, by said centralized control operation, one or more interlocks amongst the plurality of railway traffic interlocks dispersed in said plural railways constituting said railway network, to block railway traffic to the specified track sections and thereby to permit a railway field worker to enter the track sections."

---

[65] *CTC*, WIKIPEDIA, https://en.wikipedia.org/wiki/Centralized_traffic_control.
[66] *Fiscal Year 2018 Operating Budget*, SEPTA (available at https://planning.septa.org/wp-content/uploads/2022/07/Operating-Budget-FY2018.pdf) at 97-98.

130. Amtrak budgeted $2,405,319 as Northeast Corridor (NEC)-wide expenditure for "implement[ing] the SEPTA and Metro North Enhanced Employee Protection System (EEPS) into the Amtrak CETC [Centralized Electrification and Traffic Control] systems on the NEC" in October 2017 for the fiscal year 2018. (emphasis added).[67]

C.EN.101714. CETC Amtrak System - MOFW Enhanced Employee Protection System (Segment 31). CETC - Enhanced Employee Protection System. This project will implement the SEPTA and Metro North Enhanced Employee Protection System (EEPS) into the Amtrak CETC systems on the NEC.	$2,405,319

131. Amtrak budgeted $224,007 as FY19 Proposed Budget for copying SEPTA's enhanced employee protection system.

All Other Amtrak Programs/Projects – Scopes	FY19 Proposed Budget
C.EN.101714. CETC AMTRAK SYSTEM-MOFW ENHANCED EMPLOYEE PROTECTION SYSTEM. Implement a system to enhance roadway worker protection when working on track under foul time or track out of service. The system will provide roadway workers with an authorization code that corresponds to the blocking protection applied in the CETC control system. Removal of the protection by the CETC train dispatcher will require the authorization code be provided by the roadway worker. The system will utilize modifications to the CETC System platform functionality and mobile devices assigned to roadway workers. Deliverables: • EEPS operating practices documentation; • Modification to each CETC System to provide EEPS functionality: - Wilmington CETC (Mid-Atlantic Division) - Boston CETC (NH to Boston, Springfield Line and MBTA Lines) - NY CETC West - PSCC - CETC Hudson-Albany Line • EEPS mobile devices for roadway workers; • Training program for roadway workers and dispatchers; • Operations management plans and procedures to be used after system acceptance;	$224,007

132. The RailwayNet[SM]/AIM system and/or other same or similar system or method, implemented by SEPTA, that places track sections in "foul time" is a "block placing part" as recited in this claim element. Specifically, FRA regulations 49 C.F.R. § 214.323 defines "foul time" as "a method of establishing working limits on controlled track in which a roadway worker is notified by the train dispatcher or control operator that *no trains will operate within a specific segment of controlled track until the roadway worker reports clear of the track*." Because

[67] *Northeast Corridor One-Year Implementation Plan*, NEC COMMISSION 1, 16 (Oct. 2017), http://nec-commission.com/app/uploads/2018/03/NEC-One-Year-Implementation-Plan-FY18.pdf.

SEPTA, through its implementation of the RailwayNet^{SM}/AIM system and/or other same or similar system or method, has the ability to place tracks in foul time, it includes "a block placing part to place a block on one or more specified track sections in any of said plural railways constituting said railway network that is managed by centralized control operation from the railway traffic control apparatus, the railway traffic control apparatus controlling, by said centralized control operation, one or more interlocks amongst the plurality of railway traffic interlocks dispersed in said plural railways constituting said railway network, to block railway traffic to the specified track sections and thereby to permit a railway field worker to enter the track sections." Moreover, in order to place a track segment in "foul time," the system must provide a "user interface of the railway traffic control apparatus" to permit the dispatcher to establish the blocking protection.

133. The RailwayNet^{SM}/AIM system and/or other same or similar system or method provides "train monitoring and control," automatic route setting/automatic routing," "automatic traffic regulation," and "bulletins, authorities, and restrictions management," as shown in the image below.[68] One or more of these functionalities encompasses the claimed block placing part.

[68] *Intelligence-Based Rail Solutions*, Collins Aerospace, https://web.archive.org/web/20211122013021/https://www.collinsaerospace.com/-/media/project/collinsaerospace/collinsaerospace-website/product-assets/marketing/r/rail/arinc-rail-solutions-for-passengers.pdf?rev=e7e5ddbff2de4154ba265f03e27f14d3; *see Advanced Information Management (AIM) Rail Dispatch*, WABTEC, https://www.wabteccorp.com/digital-intelligence/signaling-and-train-control/dispatch/advanced-information-management-aim-rail-dispatch (last visited June 27, 2024).

Centralized Traffic Control and SCADA

Collins designs and integrates state-of-the-art rail control solutions using our ARINC Advanced Information Management (AIM®) platform. AIM serves as an end-to-end solution for all rail control requirements, including SCADA, Centralized Traffic Control, Positive Train Control (PTC) and control center integration. Highly flexible and feature-rich, AIM enables railroads to maximize operational efficiency, cost-effectiveness and safety, all while providing an environment protected by the latest tools and techniques in cybersecurity.

KEY AREAS OF EXPERTISE

- Train monitoring and control
- Automatic train tracking
- Automatic route setting/ automatic routing
- Automatic traffic regulation and schedule deviation
- Schedule management
- Integrated yard management
- Bulletins, authorities and restrictions management
- Employee in Charge (EIC) terminals
- Emergency Operating Procedures (EOP)
- Power planning
- Playback and simulation
- Data acquisition
- Interface integration

134. The RailwayNet^{SM}/AIM system and/or other same or similar system or method, implemented by SEPTA, is a SaaS and IaaS product that provides "full-featured network management and infrastructure, hardware, network, operating systems, and applications for fault, performance, security and configuration management."[69] Additionally, RailwayNet^{SM} is "designed to help meet the availability standards required for PTC operations."[70] Because RailwayNet^{SM} is designed to support railroads to meet the PTC requirements, RailwayNet^{SM} should be configured to manage train movements, including placing blocks on one or more sections of railway track to prevent trains from traversing the one or more sections of railway track.

135. In order to comply with and implement FRA's regulations (communication-

[69] White Paper at 6.
[70] *Id.*

based/processor-based train control technology designed to address a number of railway safety issues including train-to-train collisions, over-speed derailments, incursions into established work-zone limits, and train movement through a main-line switch that is in an improper position), RailwayNet^{SM}/AIM system and/or other same or similar system or method is configured to place a block on one or more sections of railway track to prevent trains from traversing the one or more sections of railway track.[71]

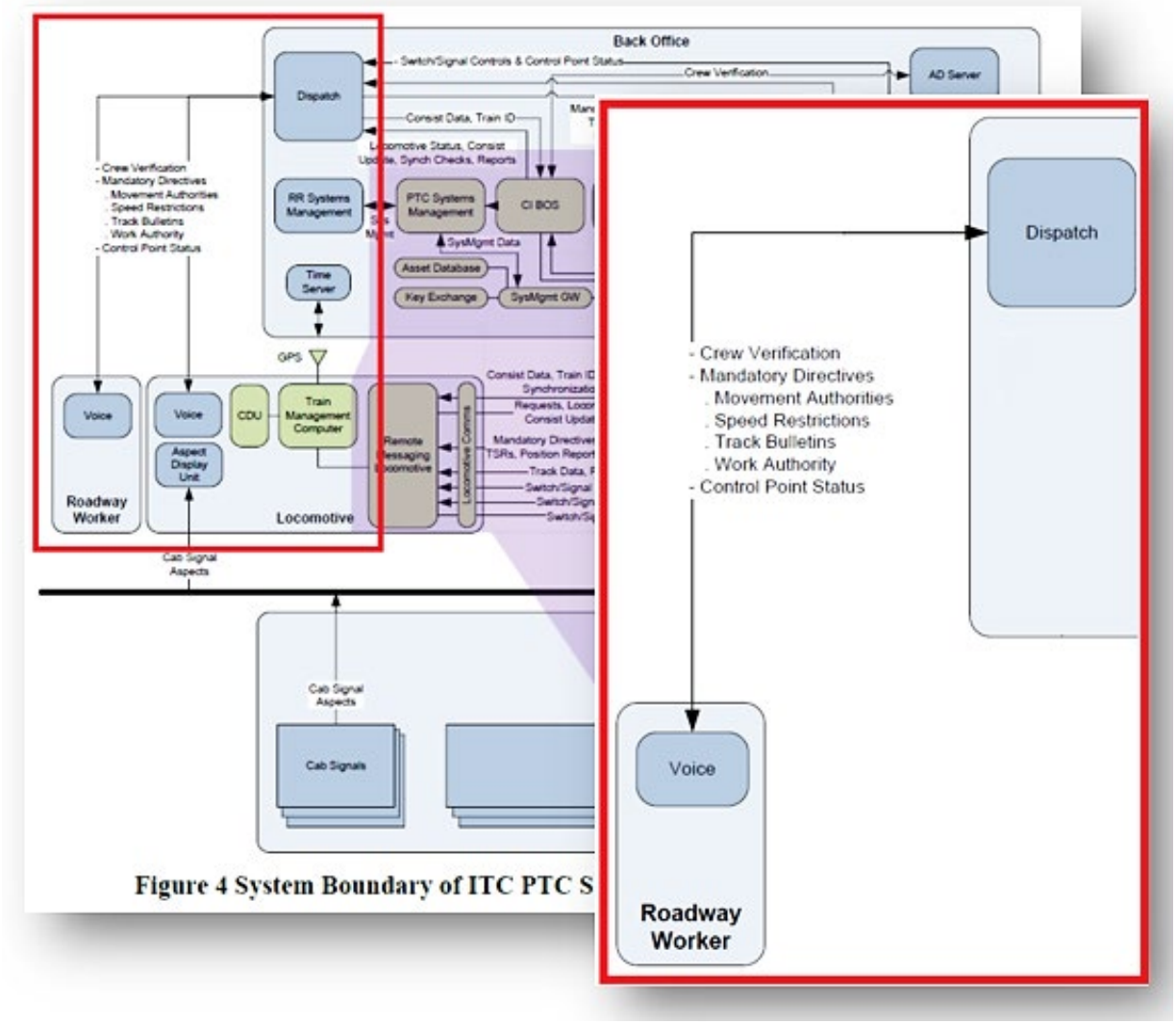

136. Accordingly, SEPTA's implementation of the RailwayNet^{SM}/AIM system and/or

[71] Final Report at 14.

other same or similar system or method provides "a user interface of the railway traffic control apparatus, including a block placing part to place a block on one or more specified track sections in any of said plural railways constituting said railway network that is managed by centralized control operation from the railway traffic control apparatus, the railway traffic control apparatus controlling, by said centralized control operation, one or more interlocks amongst the plurality of railway traffic interlocks dispersed in said plural railways constituting said railway network, to block railway traffic to the specified track sections and thereby to permit a railway field worker to enter the track sections."

137. SEPTA's implementation of the RailwayNet^{SM}/AIM system and/or other same or similar system or method further generates "a removal code, determin[es] an electronic contact address of the railway field worker by accessing a rail personnel contact database registering, for each railway personnel, electronic contact information of the railway personnel, and transmit[s] the removal code to the electronic contact address of the railway field worker."

138. Amtrak budgeted an additional $224,007 in FY19 for copying SEPTA's system to enhance railway worker protection when working on track under foul time or track out of service. The system provides railway workers with an authorization code that corresponds to the blocking protection applied in the CTC control system via their mobile devices. Removal of the protection by the CTC train dispatcher will require the authorization code be provided by the railway worker. The system will utilize modifications to the CTC system platform functionality and mobile devices assigned to railway workers. The deliverables to Amtrak (copying SEPTA's system) included modification to each CTC system to provide enhanced employee protection functionality in numerous CTC systems, and also included enhanced employee protection mobile devices for railway workers; enhanced employee protection operating practices documentation;

training program for railway workers and dispatchers; and operations management plans and procedures to be used after system acceptance.[72]

139. The RailwayNet^{SM}/AIM system and/or other same or similar system or method provides railway workers with an authorization code that corresponds to the blocking protection applied in the control system via their mobile devices. Removal of the protection by the train dispatcher will require the authorization code be provided by the railway worker. The system will utilize modifications to the CTC system platform functionality and mobile devices assigned to railway workers.

140. In a report authored submitted to the U.S. Department of Transportation, it was illustrated that the claimed railway control apparatus as the "back office" in the below diagram.[73]

[72] *NEC One-Year Plan 2019* at 233.
[73] Final Report at 11.

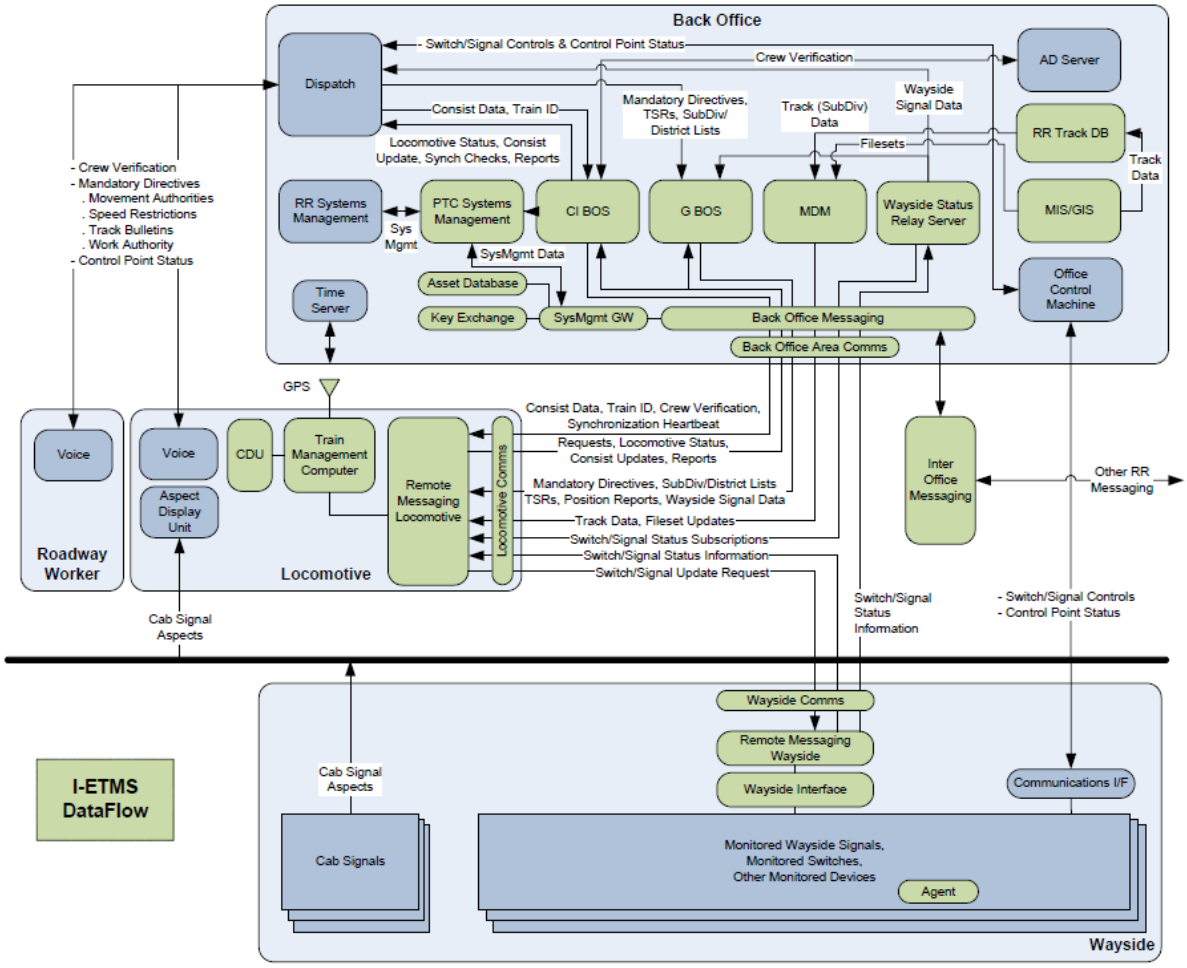

Figure 2 I-ETMS PTC Message Flows

141. Amtrak, coping of SEPTA's system, purchased mobile devices for its railway workers and implemented a system whereby its CTC system sends authorization codes to the railway workers. In order to know which mobile device to send the authorization code to, the system implemented by Amtrak must have a database storing the electronic contact address for the railway workers.[74]

[74] *See NEC One-Year Plan 2019* at 233.

All Other Amtrak Programs/Projects – Scopes	FY19 Proposed Budget
C.EN.101714. CETC AMTRAK SYSTEM-MOFW ENHANCED EMPLOYEE PROTECTION SYSTEM. Implement a system to enhance roadway worker protection when working on track under foul time or track out of service. The system will provide roadway workers with an authorization code that corresponds to the blocking protection applied in the CETC control system. Removal of the protection by the CETC train dispatcher will require the authorization code be provided by the roadway worker. The system will utilize modifications to the CETC System platform functionality and mobile devices assigned to roadway workers. Deliverables: • EEPS operating practices documentation; • Modification to each CETC System to provide EEPS functionality: - Wilmington CETC (Mid-Atlantic Division) - Boston CETC (NH to Boston, Springfield Line and MBTA Lines) - NY CETC West - PSCC - CETC Hudson-Albany Line • EEPS mobile devices for roadway workers; • Training program for roadway workers and dispatchers; • Operations management plans and procedures to be used after system acceptance;	$224,007

142. According to Amtrak's Northeast Corridor Annual Report for fiscal year 2017, Amtrak allocated more than $420,000 in copying SEPTA's enhanced employee protection functionality in the Northeast Corridor through its implementation of RailwayNet^{SM}/AIM system and/or other same or similar system or method. It also specifies providing back-office infrastructure and messaging, including "[s]torage and delivery of crew and consist information, train IDs and clearances."[75]

143. SEPTA, for its implementation of the RailwayNet^{SM}/AIM system and/or other same or similar system or method, has purchased mobile devices for its railway workers and implemented a system whereby its CTC system sends authorization codes to the railway workers.

144. In order to know which mobile device to send the authorization code to, the RailwayNet^{SM}/AIM system and/or other same or similar system or method, as implemented by SEPTA, must have a database storing the electronic contact address for the railway workers.

145. The RailwayNet^{SM} system/AIM system and/or other same or similar system or

[75] White Paper at 7.

method, implemented by SEPTA, is a SaaS and IaaS product that provides "full-featured network management and infrastructure, hardware, network, operating systems, and applications for fault, performance, security and configuration management."[76] It additionally specifies enabling ITC PTC interoperability and compliance with I-ETMS systems.[77]

146. The RailwayNet[SM] system/AIM system and/or other same or similar system or method supports I-ETMS message flows, including communications with railway workers to communicate crew verification and mandatory directives.[78]

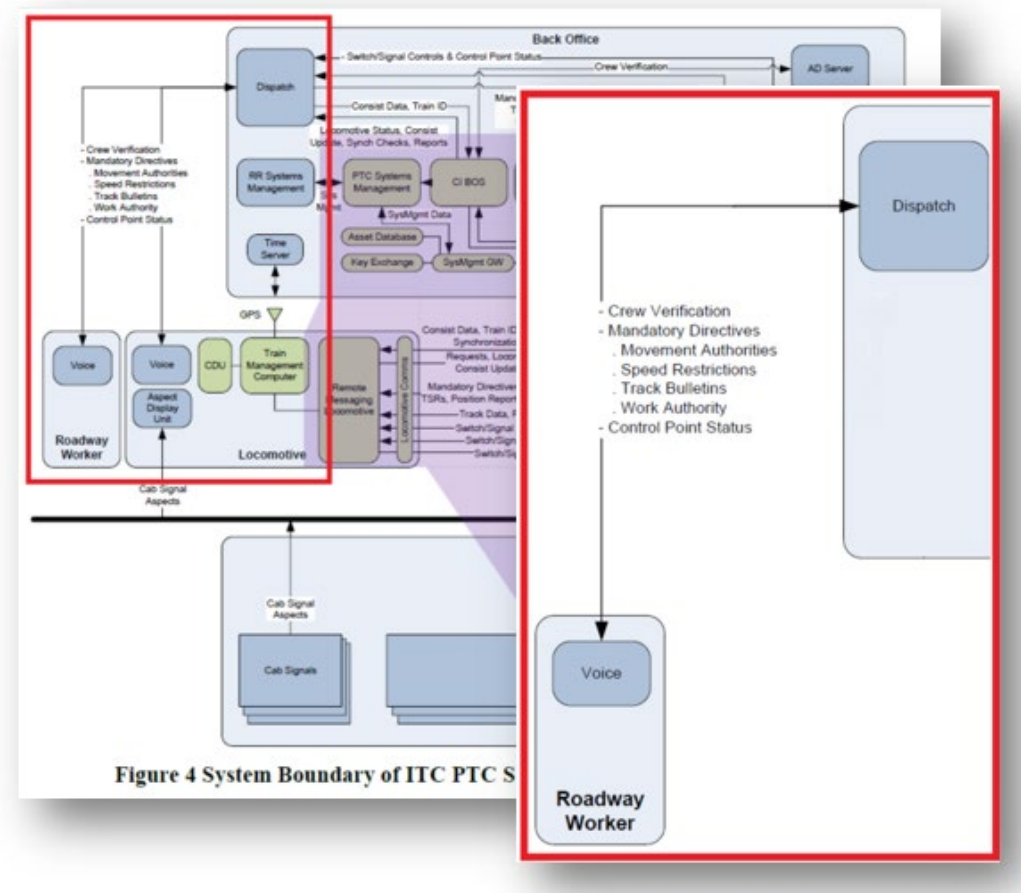

Figure 4 System Boundary of ITC PTC S

[76] White Paper at 6.
[77] Final Report at 43.
[78] *Id.* at 14.

147. Likewise, Wabtec acknowledges that it offers I-ETMS supported packages.[79] Wabtec also advertise that RailwayNet^{SM} "offers reliable, tailored, and scalable PTC messaging. Utilizing VHF, cellular, Wi-Fi and MPLS, RailwayNet^{SM} PTC delivers initialization messages, crew . . . ."[80]

148. According to Amtrak's 2019 FY plan, it copied SEPTA's enhanced employee protection system that operates by "provid[ing] roadway workers with an authorization code that corresponds to the blocking protection applied in the . . . [CTC] control system. Removal of the protection by the . . . [CTC] train dispatcher will require the authorization code to be provided by the roadway worker," as shown in the image below.[81] In order to provide the railway workers with an authorization code, the system must use a method that has a database containing contact information for each railway worker (*i.e.*, a railway personnel contact database registering, for each railway personnel, an electronic contact address of the railway personnel). Moreover, in order to facilitate communication between the control room and the railway workers working on or near the tracks, the system must include a control apparatus comprising a network interface through which the railway control apparatus communicates via a network.

[79] *I-ETMS Positive Train Control (PTC) Communications Package*, WABTEC, https://www.wabteccorp.com/digital-intelligence/signaling-and-train-control/communications/i-etms-positive-train-control-ptc-communications-package (last visited June 27, 2024).
[80] *RailwayNet Positive Train Control Communication Solution*, WABTEC, https://www.wabteccorp.com/digital-intelligence/signaling-and-train-control/communications/railwaynet-positive-train-control-communication-solution (last visited June 27, 2024).
[81] *NEC One-Year Plan 2019* at 233.

All Other Amtrak Programs/Projects – Scopes	FY19 Proposed Budget
C.EN.101714. CETC AMTRAK SYSTEM-MOFW ENHANCED EMPLOYEE PROTECTION SYSTEM. Implement a system to enhance roadway worker protection when working on track under foul time or track out of service. The system will provide roadway workers with an authorization code that corresponds to the blocking protection applied in the CETC control system. Removal of the protection by the CETC train dispatcher will require the authorization code be provided by the roadway worker. The system will utilize modifications to the CETC System platform functionality and mobile devices assigned to roadway workers. Deliverables: • EEPS operating practices documentation; • Modification to each CETC System to provide EEPS functionality: - Wilmington CETC (Mid-Atlantic Division) - Boston CETC (NH to Boston, Springfield Line and MBTA Lines) - NY CETC West - PSCC - CETC Hudson-Albany Line • EEPS mobile devices for roadway workers; • Training program for roadway workers and dispatchers; • Operations management plans and procedures to be used after system acceptance;	$224,007

149. Amtrak budgeted $224,007 as FY19 Proposed Budget for copying SEPTA's enhanced employee protection system that will "provide roadway workers with an authorization code that corresponds to the blocking protection applied in the . . . [CTC] control system."[82]

All Other Amtrak Programs/Projects – Scopes	FY19 Proposed Budget
C.EN.101714. CETC AMTRAK SYSTEM-MOFW ENHANCED EMPLOYEE PROTECTION SYSTEM. Implement a system to enhance roadway worker protection when working on track under foul time or track out of service. The system will provide roadway workers with an authorization code that corresponds to the blocking protection applied in the CETC control system. Removal of the protection by the CETC train dispatcher will require the authorization code be provided by the roadway worker. The system will utilize modifications to the CETC System platform functionality and mobile devices assigned to roadway workers. Deliverables: • EEPS operating practices documentation; • Modification to each CETC System to provide EEPS functionality: - Wilmington CETC (Mid-Atlantic Division) - Boston CETC (NH to Boston, Springfield Line and MBTA Lines) - NY CETC West - PSCC - CETC Hudson-Albany Line • EEPS mobile devices for roadway workers; • Training program for roadway workers and dispatchers; • Operations management plans and procedures to be used after system acceptance;	$224,007

150. SEPTA has implemented an enhanced employee protection system that operates by providing railway workers with an authorization code that corresponds to the blocking protection applied in the CTC control system.

151. SEPTA's implementation of an enhanced employee protection system requires

[82] *NEC One-Year Plan 2019* at 233.

the authorization code to be provided by the roadway worker to be entered back into the control system in order for the blocking protection to be removed.

152. In order to provide the railway workers with an authorization code, SEPTA's system must use a database containing contact information for each railway worker (*i.e.*, a railway personnel contact database registering, for each railway personnel, an electronic contact address of the railway personnel). Moreover, in order to facilitate communication between the control room and the railway workers working on or near the tracks, SEPTA's system must include a control apparatus comprising a network interface through which the railway control apparatus communicates via a network.

153. The RailwayNet^{SM}/AIM system and/or other same or similar system or method, as implemented by SEPTA, specifies providing back office infrastructure and messaging, including "[s]torage and delivery of crew and consist information, train IDs and clearances."[83] It further specified enabling ITC PTC interoperability and compliance with I-ETMS systems.[84] Because I-ETMS systems require communication of crew verification and employee authentication, SEPTA maintains electronic contact addresses of the railway field workers from a rail personnel contact database. RailwayNet^{SM} messaging functions also include: "[k]ey exchange server," described as "[s]ecurity keys with data store."[85]

[83] *See* White Paper at 7.
[84] *See* Final Report at 43.
[85] White Paper at 7.

A summary of the ARINC RailwayNet PTC hosting service functionality is shown below.

Messaging functions	Description	Included
Back-office messaging	Message transmission for the railroad back office	•*
Inter-office messaging	Message transmission between assets and railroad back offices in support of train initialization	•*
Systems management gateway	Messaging systems management	•
Systems management	Remote asset monitoring and control	Optional
Back-office area communications	Communications infrastructure at the Annapolis facility in support of railroad remote asset connectivity via cellular and internet connections	•
Key exchange server	Security keys with data store	•

154. Moreover, the RailwayNet[SM] system/AIM system and/or other same or similar system or method, as implemented by SEPTA, specifies providing back-office infrastructure and messaging that allows railway workers to communicate, *inter alia*, crew verification and mandatory directives with the dispatch.[86]

[86] Final Report at 14.

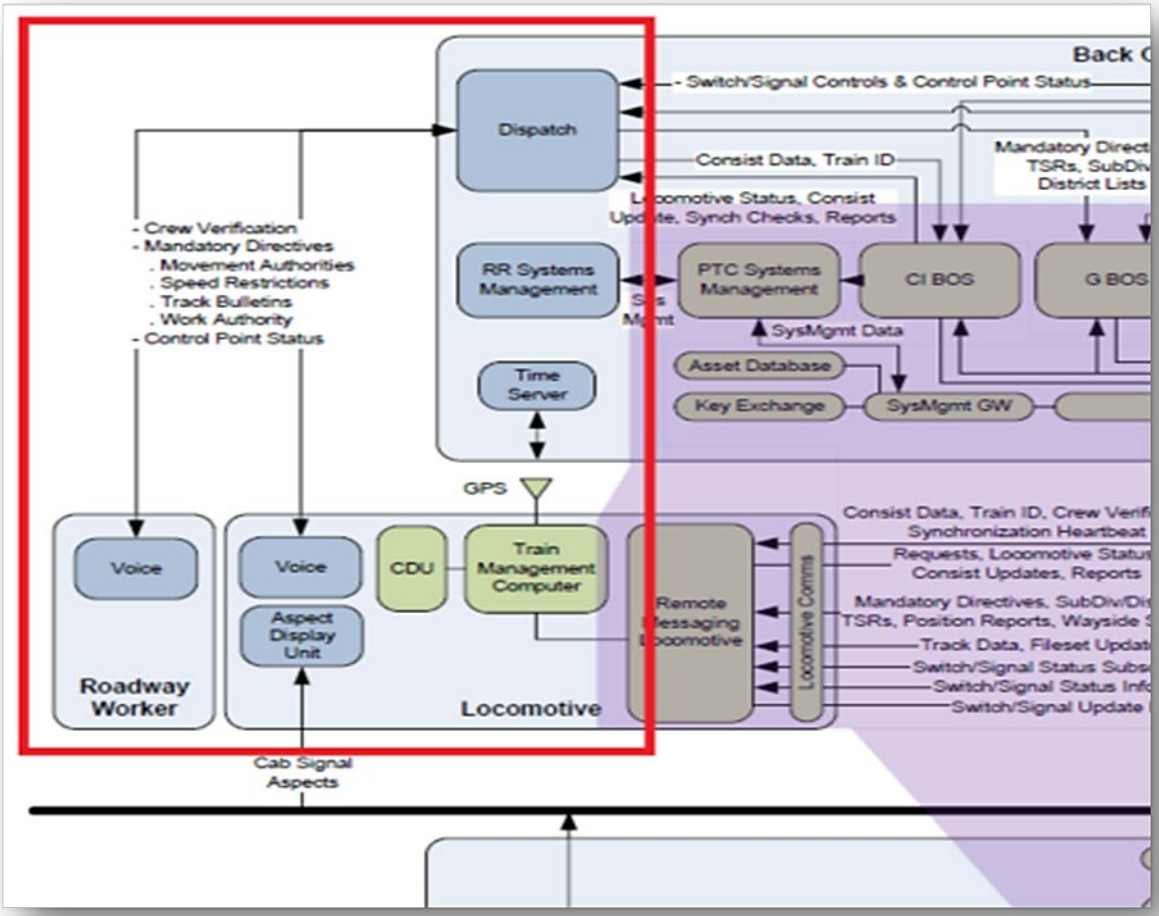

155. Additionally, RailwayNet^{SM}/AIM system and/or other same or similar system or method serves as a node on a network of railroads, enabling interoperability and electronic communications connectivity to the network. Accordingly, RailwayNet^{SM}/AIM system and/or other same or similar system or method is configured to retrieve the electronic contact address of the railway field worker from the rail personnel contact database and transmit the removal code to the electronic contact address of the railway field worker.

156. Accordingly, SEPTA's implementation of the RailwayNet^{SM}/AIM system and/or other same or similar system or method generates "a removal code, determin[es] an electronic contact address of the railway field worker by accessing a rail personnel contact database

registering, for each railway personnel, electronic contact information of the railway personnel, and transmitting the removal code to the electronic contact address of the railway field worker."

157. SEPTA's implementation of the RailwayNet^{SM}/AIM system and/or other same or similar system or method permits "the block to said one or more track sections to be removed only upon entry of the removal code by said centralized control operation from the railway traffic control apparatus."

158. Amtrak copied SEPTA's enhanced employee protection system that requires the dispatcher to enter an "authorization code" in order to remove the protection (i.e., the foul time) from the track.[87]

All Other Amtrak Programs/Projects – Scopes	FY19 Proposed Budget
C.EN.101714. CETC AMTRAK SYSTEM-MOFW ENHANCED EMPLOYEE PROTECTION SYSTEM. Implement a system to enhance roadway worker protection when working on track under foul time or track out of service. The system will provide roadway workers with an authorization code that corresponds to the blocking protection applied in the CETC control system. Removal of the protection by the CETC train dispatcher will require the authorization code be provided by the roadway worker. The system will utilize modifications to the CETC System platform functionality and mobile devices assigned to roadway workers. Deliverables: • EEPS operating practices documentation; • Modification to each CETC System to provide EEPS functionality: - Wilmington CETC (Mid-Atlantic Division) - Boston CETC (NH to Boston, Springfield Line and MBTA Lines) - NY CETC West - PSCC - CETC Hudson-Albany Line • EEPS mobile devices for roadway workers; • Training program for roadway workers and dispatchers; • Operations management plans and procedures to be used after system acceptance;	$224,007

159. SEPTA's implementation of the RailwayNet^{SM} system/AIM system and/or other same or similar system or method requires the entry of an authorization code in order to remove the protection from the track.

160. The FRA has recognized that systems such as the enhanced employee protection system implemented by SEPTA through the RailwayNet^{SM} system/AIM system and/or other

[87] *NEC One-Year Plan 2019* at 233.

same or similar system or method complies with applicable recommended regulations (communication-based/processor-based train control technology designed to address a number of rail safety issues including train-to-train collisions, over-speed derailments, incursions into established work-zone limits, and train movement through a main-line switch that is in an improper position) in that the "dispatching system will not allow a dispatcher to release controlled track working limits until the RWIC affirmatively indicates via an electronic prompt that he or she is releasing working limits authority."[88]

161. Accordingly, SEPTA's implementation of the RailwayNet^{SM}/AIM system and/or other same or similar system or method permits "the block to said one or more track sections to be removed only upon entry of the removal code by said centralized control operation from the railway traffic control apparatus."

162. Therefore, SEPTA, through its implementation of the RailwayNet^{SM}/AIM systems and/or other same or similar system or method has infringed and continues to infringe at least claim 19 of the '835 patent.

163. As direct and proximate result of SEPTA's infringement of the '835 patent, Railware has been injured and has been caused significant harm and financial damages.

164. SEPTA has also induced and continues to induce infringement of at least claim 19 of the '835 patent in violation of 35 U.S.C. § 271(b).

165. SEPTA induces its users, and/or developers of its systems to infringe at least claim 19 of the '835 patent, and does so with the specific intent, by providing instructions, directions, information, and/or knowledge on how to use its systems and/or incorporate its systems into other products (including both the RailwayNet^{SM}/AIM systems and any other same

[88] *RRR* at 81.

or similar systems or methods). For example, SEPTA instructs its dispatchers on how to use the system to infringe.

166. To the extent the marking requirements of 35 U.S.C. § 287 apply, SEPTA has had constructive knowledge of the ’835 patent at least since December 15, 2016. Moreover, SEPTA has had actual knowledge of the ’545 patent (of which the ’835 patent is a reissue) since at least December 15, 2016. SEPTA’s continued infringement on or after either date is in spite of the objectively high likelihood that its activities constitute infringement of a valid patent, and this risk was either known or so obvious that it should have been known to SEPTA. Thus, SEPTA’s continued infringement since at least as of December 15, 2016 is willful and deliberate.

167. Railware has suffered and continues to suffer damages and irreparable harm as a result of SEPTA’s past and ongoing infringement. Unless and until SEPTA’s infringement is enjoined, Railware will continue to be damaged and irreparably harmed.

168. Railware is entitled to all remedies at law and equity including, but not limited to, an injunction against SEPTA’s infringement of the ’835 patent pursuant to 35 U.S.C. § 283.

169. Railware is entitled to damages for SEPTA’s infringement of the ’835 patent including, but not limited to, damages pursuant to 35 U.S.C. §§ 284 and 285.

THIRD CLAIM FOR RELIEF

(Infringement of the ’115 patent)

170. Railware repeats and incorporates by reference all prior allegations of this Complaint as if fully set forth herein.

171. Railware is the owner by assignment of all rights, title, and interest in and to the ’115 patent.

172. The ’115 patent is valid and enforceable.

173. Claim 20 of the ’115 patent recites:

A railway control apparatus for centralized control of a centrally controllable railway network including plural railways and a plurality of railway interlocks dispersed in said plural railways, comprising:

> a processor for controlling a plurality of track sections in the railway network, wherein each track section is associated with a corresponding interlock and is disposed in any of said plural railways of said railway network that is managed by centralized control operation from the railway control apparatus, the processor controlling, by said centralized control operation, one or more interlocks amongst the plurality of railway interlocks dispersed in said plural railways of said railway network, to block railway traffic to one or more specified track sections; and
>
> a memory device storing computer-executable instructions, wherein execution of the computer-executable instructions by the processor causes the railway control apparatus to:
>
> > receive a selection of at least one track section amongst the plurality of track sections;
> >
> > transmit a block signal to the corresponding interlock associated with the at least one selected track section, to place a block on the selected track section by said centralized control operation from the railway control apparatus;
> >
> > generate a secret code associated with the at least one selected track section; and
> >
> > transmit the secret code to a remote user terminal.

174. In violation of 35 U.S.C. § 271(a), SEPTA has infringed and continues to infringe one or more claims of the ’115 patent by making, using, offering for sale, selling, and/or importing in or into the United States a system or method covered by the ’115 patent, including, but not limited to, at least SEPTA’s implementation and/or use of the RailwayNet^{SM} system/AIM system and/or other same or similar system or method.[89]

175. SEPTA’s implementation of the RailwayNet^{SM} system/AIM system and/or other

[89] Further investigation may reveal that others of SEPTA’s products and systems also directly or indirectly infringe at least claim 20 or other claims of the ’115 patent.

same or similar system or method includes an enhanced employee protection system, which protects the safety of railway workers on or near railway tracks.

176. SEPTA, through its implementation and/or use of the RailwayNet^{SM} system/AIM system and/or other same or similar system or method, infringes at least claim 20 of the '115 patent.

177. SEPTA's implementation of the RailwayNet^{SM} system/AIM system and/or other same or similar system or method is a "railway control apparatus for centralized control of a centrally controllable railway network including plural railways and a plurality of railway interlocks dispersed in said plural railways."

178. SEPTA owns and/or operates control centers, including one at 1234 Market Street, Philadelphia, PA 19107.[90] Control centers are centralized railway control systems using methods to control access to railway tracks configured for centralized control of a centrally controllable railway network including plural railways and a plurality of railway interlocks dispersed in said plural railways.

179. SEPTA's control center, shown below,[91] includes a number of user terminals through which train dispatchers control the movement of trains, including by placing blocks on specified track sections:

[90] *See PHOTOS: Inside SEPTA's Last Towers,* THE POSITION LIGHT, https://position-light.blogspot.com/2021/06/photos-inside-septas-towers.html (June 6, 2021).
[91] Pratima Bhattacharyya, *Reporter's Notebook: Taking a look at SEPTA control,* DAILY PENNSYLVANIAN (Oct. 5, 2010), https://www.thedp.com/article/2010/10/reporters_notebook_taking_a_look_at_septa_control.

180. SEPTA describes its control center as "a centralized facility that manages the safe and efficient movement of all of SEPTA's operating modes and provides customer service alerts to our passengers."[92] The control center functions include, *inter alia*, "Railroad Control" whereby "[t]he Railroad Control Center utilizes a Centralized Train Control System to provide realtime information and control functions to the 19th floor. Six (6) train dispatchers have the responsibility to operate switches and display signals on SEPTA-controlled territory, managing the movement of 780 scheduled trains a day."[93]

181. The AIM system provides "centralized traffic control," "train monitoring and control," "automatic route setting/automatic routing," "automatic traffic regulation," and

[92] *Fiscal Year 2018 Operating Budget*, SEPTA (available at https://planning.septa.org/wp-content/uploads/2022/07/Operating-Budget-FY2018.pdf) at 97-98.
[93] *Id.* at 98.

"bulletins, authorities," and "restrictions management."[94]

Centralized Traffic Control and SCADA

Collins designs and integrates state-of-the-art rail control solutions using our ARINC Advanced Information Management (AIM®) platform. AIM serves as an end-to-end solution for all rail control requirements, including SCADA, Centralized Traffic Control, Positive Train Control (PTC) and control center integration. Highly flexible and feature-rich, AIM enables railroads to maximize operational efficiency, cost-effectiveness and safety, all while providing an environment protected by the latest tools and techniques in cybersecurity.

KEY AREAS OF EXPERTISE

- Train monitoring and control
- Automatic train tracking
- Automatic route setting/ automatic routing
- Automatic traffic regulation and schedule deviation
- Schedule management
- Integrated yard management
- Bulletins, authorities and restrictions management
- Employee in Charge (EIC) terminals
- Emergency Operating Procedures (EOP)
- Power planning
- Playback and simulation
- Data acquisition
- Interface integration

182. SEPTA implemented the RailwayNet^{SM} as a SaaS and/or IaaS—a software/infrastructure as a service—product that provides "full-featured network management and infrastructure, hardware, network, operating systems, and applications for fault, performance, security and configuration management."[95] SEPTA has further implemented the AIM system.

183. RailwayNet^{SM} is advertised to help facilitate the increases in safety and reliability

[94] *Intelligence-Based Rail Solutions*, Collins Aerospace, https://web.archive.org/web/20211122013021/https://www.collinsaerospace.com/-/media/project/collinsaerospace/collinsaerospace-website/product-assets/marketing/r/rail/arinc-rail-solutions-for-passengers.pdf?rev=e7e5ddbff2de4154ba265f03e27f14d3; *see also Advanced Information Management (AIM) Rail Dispatch*, WABTEC, https://www.wabteccorp.com/digital-intelligence/signaling-and-train-control/dispatch/advanced-information-management-aim-rail-dispatch (last visited June 27, 2024).
[95] White Paper at 6.

that train control systems provide.[96]

184. RailwayNet^{SM}, which SEPTA uses, improves rail safety. More particularly, "[t]his system refers to communication-based/processor-based train control technology designed to address a number of rail safety issues, including train-to-train collisions, over-speed derailments, incursions into established work-zone limits, and train movement through a main-line switch that is in an improper position."[97]

185. RailwayNet^{SM} was implemented throughout SEPTA's routes.

186. As explained below, RailwayNet^{SM} is a hosted network, messaging and application platform, designed to assist operators in meeting the requirements mandated by the Rail Safety Improvement Act of 2008 (the "Act"). The Act directs the Federal Railroad Administration (FRA) to mandate new regulations focused on railroad safety. When used in conjunction with the operator's train control infrastructure, RailwayNet^{SM} helps facilitate the

[96] *See, e.g., Amtrak signs nationwide contract for Rockwell Collins' ARINC RailwayNet^{SM} Positive Train Control service*, COLLINS AEROSPACE (Sep. 6, 2017), https://rockwellcollins.com/-/media/Files/Unsecure/Services-And-Support/Information-Management/ARINC-Rail/RC_Amtrak-Press-Release_09-06-17.ashx; *RailwayNet Positive Train Control Communication Solution*, WABTEC, https://www.wabteccorp.com/digital-intelligence/signaling-and-train-control/communications/railwaynet-positive-train-control-communication-solution (last visited June 27, 2024).
[97] White Paper at 3.

increases in safety and reliability.[98]

187. The "RailwayNet[SM] integrations server and software provides connectivity between the railroad IT systems and the hosted back-office components."[99] The integration server provides an interface with various system components.

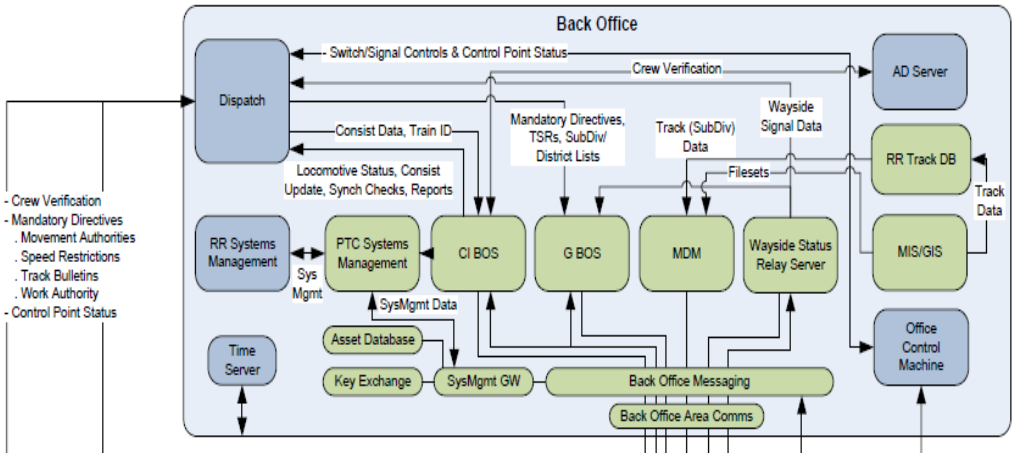

[98] *See, e.g., Amtrak signs nationwide contract for Rockwell Collins' ARINC RailwayNet[SM] Positive Train Control service*, COLLINS AEROSPACE (Sep. 6, 2017), https://rockwellcollins.com/-/media/Files/Unsecure/Services-And-Support/Information-Management/ARINC-Rail/RC_Amtrak-Press-Release_09-06-17.ashx.
[99] *See* White Paper at 8 (illustrating "AIM® integration server").

AIM® integration server

The ARINC RailwayNet integrations server and software provides connectivity between the railroad IT systems and the hosted back-office components. The functions of this application include:

- Interface with customer's IT gateway
- Interface with back office
- Manage crew authentication through the customer's IT gateway
- Functions to assign train ID to trains based on the clearance number
- Functions to manage train consist through the customer's IT gateway
- Functions to track, display, and store events and alarms

Centralized Traffic Control and SCADA

Collins designs and integrates state-of-the-art rail control solutions using our ARINC Advanced Information Management (AIM®) platform. AIM serves as an end-to-end solution for all rail control requirements, including SCADA, Centralized Traffic Control, Positive Train Control (PTC) and control center integration. Highly flexible and feature-rich, AIM enables railroads to maximize operational efficiency, cost-effectiveness and safety, all while providing an environment protected by the latest tools and techniques in cybersecurity.

KEY AREAS OF EXPERTISE

- Train monitoring and control
- Automatic train tracking
- Automatic route setting/ automatic routing
- Automatic traffic regulation and schedule deviation
- Schedule management
- Integrated yard management
- Bulletins, authorities and restrictions management
- Employee in Charge (EIC) terminals
- Emergency Operating Procedures (EOP)
- Power planning
- Playback and simulation
- Data acquisition
- Interface integration

188. The RailwayNet^{SM}/AIM system and/or other same or similar system or method, as implemented by SEPTA, provides the network connections and office applications required to exchange critical information among railroads and their partner short line commuter railroads. It is available on a subscription basis as hosted SaaS (software as a service) and IaaS (infrastructure as a service) solutions, and messaging from the back office to the locomotive through VHF, cellular, and Wi-Fi is also available.[100]

189. The RailwayNet^{SM}/AIM system and/or other same or similar system or method, as implemented by SEPTA, further controls plural railways and a plurality of railway traffic interlocks. Specifically, Centralized Train Control systems, such as that employed by SEPTA

[100] *New from Rockwell Collins: Shared-network PTC platform*, RAILWAY AGE 14 (July 2016), https://issuu.com/railwayage/docs/july_2016_railway_age; *RailwayNet Positive Train Control Communication Solution*, WABTEC, https://www.wabteccorp.com/digital-intelligence/signaling-and-train-control/communications/railwaynet-positive-train-control-communication-solution (last visited June 27, 2024).

and its implementation of the RailwayNet^{SM}/AIM and/or other similar system "consists of a centralized train dispatcher's office that controls railroad interlocking and traffic flows in portions of the rail system designated as CTC territory."[101] Train dispatchers in the control center have control over all interlockings at SEPTA.[102]

190. SEPTA implemented the RailwayNet^{SM}/AIM system and/or other same or similar system or method —a hosted network, messaging and application platform as amended—on throughout SEPTA's routes.

191. Accordingly, SEPTA's implementation of the RailwayNet^{SM}/AIM system and/or other same or similar system or method is a "railway control apparatus for centralized control of a centrally controllable railway network including plural railways and a plurality of railway interlocks dispersed in said plural railways."

192. SEPTA's implementation of the RailwayNet^{SM}/AIM system and/or other same or similar system or method includes "a processor for controlling a plurality of track sections in the railway network, wherein each track section is associated with a corresponding interlock and is disposed in any of said plural railways of said railway network that is managed by centralized control operation from the railway control apparatus, the processor controlling, by said centralized control operation, one or more interlocks amongst the plurality of railway interlocks dispersed in said plural railways of said railway network, to block railway traffic to one or more specified track sections."

193. RailwayNet^{SM}/AIM system and/or other same or similar system or method, which SEPTA uses, improves rail safety. More specifically, "[t]his system refers to **communication-**

---

[101] *CTC*, WIKIPEDIA, https://en.wikipedia.org/wiki/Centralized_traffic_control.
[102] *Fiscal Year 2018 Operating Budget*, SEPTA (available at https://planning.septa.org/wp-content/uploads/2022/07/Operating-Budget-FY2018.pdf) at 97-98.

based/processor-based train control technology designed to address a number of rail safety issues, including train-to-train collisions, over-speed derailments, incursions into established work-zone limits, and train movement through a main-line switch that is in an improper position." (emphasis added).[103]

194. The "RailwayNet[SM] integrations server and software provides connectivity between the railroad IT systems and the hosted back-office components."[104] The integration server provides an interface with various system components.

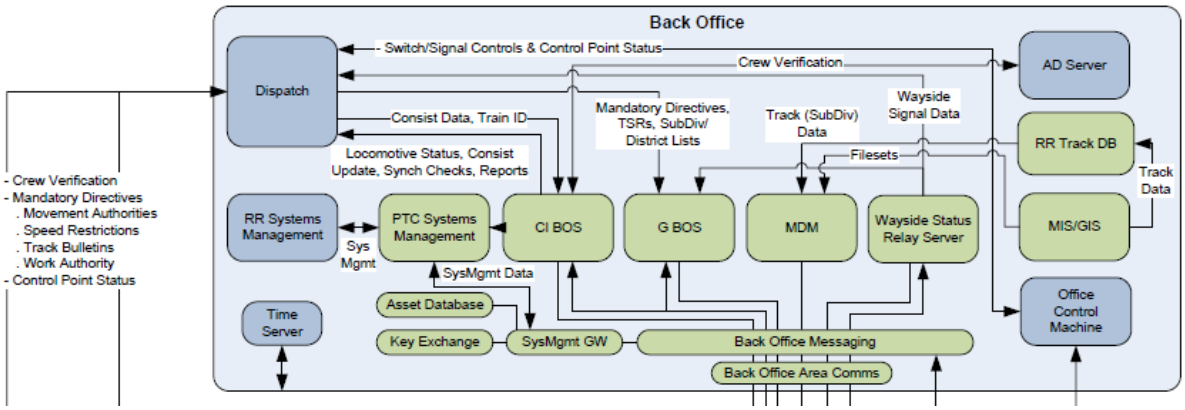

[103] White Paper at 3 (emphasis added).
[104] *See* White Paper at 8 (illustrating "AIM® integration server").

AIM® integration server

The ARINC RailwayNet integrations server and software provides connectivity between the railroad IT systems and the hosted back-office components. The functions of this application include:

- Interface with customer's IT gateway
- Interface with back office
- Manage crew authentication through the customer's IT gateway
- Functions to assign train ID to trains based on the clearance number
- Functions to manage train consist through the customer's IT gateway
- Functions to track, display, and store events and alarms

Centralized Traffic Control and SCADA

Collins designs and integrates state-of-the-art rail control solutions using our ARINC Advanced Information Management (AIM®) platform. AIM serves as an end-to-end solution for all rail control requirements, including SCADA, Centralized Traffic Control, Positive Train Control (PTC) and control center integration. Highly flexible and feature-rich, AIM enables railroads to maximize operational efficiency, cost-effectiveness and safety, all while providing an environment protected by the latest tools and techniques in cybersecurity.

KEY AREAS OF EXPERTISE

- Train monitoring and control
- Automatic train tracking
- Automatic route setting/ automatic routing
- Automatic traffic regulation and schedule deviation
- Schedule management
- Integrated yard management
- Bulletins, authorities and restrictions management
- Employee in Charge (EIC) terminals
- Emergency Operating Procedures (EOP)
- Power planning
- Playback and simulation
- Data acquisition
- Interface integration

195. The RailwayNet^{SM}/AIM system and/or other same or similar system or method, as implemented by SEPTA, provides the network connections and office applications required to exchange critical information among railroads. It is available on a subscription basis as hosted SaaS (software as a service) and IaaS (infrastructure as a service) solutions, and messaging from the back office to the locomotive through VHF, cellular, and Wi-Fi is also available.[105]

196. The RailwayNet^{SM}/AIM system and/or other same or similar system or method, as implemented by SEPTA, further controls plural railways and a plurality of railway traffic interlocks. Specifically, Centralized Train Control systems, such as that employed by SEPTA and its implementation of the RailwayNet^{SM}/AIM and/or other same or similar system or method

[105] *New from Rockwell Collins: Shared-network PTC platform*, RAILWAY AGE 14 (July 2016), https://issuu.com/railwayage/docs/july_2016_railway_age; *RailwayNet Positive Train Control Communication Solution*, WABTEC, https://www.wabteccorp.com/digital-intelligence/signaling-and-train-control/communications/railwaynet-positive-train-control-communication-solution (last visited June 27, 2024).

"consists of a centralized train dispatcher's office that controls railroad interlocking and traffic flows in portions of the rail system designated as CTC territory."[106]

197. SEPTA implemented the RailwayNet[SM]/AIM system and/or other same or similar system or method —a hosted network, messaging and application platform as amended— throughout SEPTA's routes.

198. Amtrak budgeted $2,405,319 as Northeast Corridor (NEC)-wide expenditure for "implement[ing] the SEPTA and Metro North Enhanced Employee Protection System (EEPS) into the Amtrak CETC [Centralized Electrification and Traffic Control] systems on the NEC" in October 2017 for the fiscal year 2018. (emphasis added).[107]

C.EN.101714. CETC Amtrak System - MOFW Enhanced Employee Protection System (Segment 31). CETC - Enhanced Employee Protection System. This project will implement the SEPTA and Metro North Enhanced Employee Protection System (EEPS) into the Amtrak CETC systems on the NEC.	$2,405,319

199.

200. Amtrak budgeted an additional $224,007 as FY19 Proposed Budget for copying SEPTA's system to enhance railway worker protection when working on track under foul time or track out of service. The system provides railway workers with an authorization code that corresponds to the blocking protection applied in the CTC control system. Removal of the protection by the CTC train dispatcher will require the authorization code be provided by the railway worker. The system will utilize modifications to the CTC system platform functionality and mobile devices assigned to railway workers. The deliverable to Amtrak included modification to each CTC system to provide enhanced employee protection system functionality in numerous CTC systems, and also included mobile devices for railway workers; operating

[106] *CTC*, WIKIPEDIA, https://en.wikipedia.org/wiki/Centralized_traffic_control.
[107] *Northeast Corridor One-Year Implementation Plan*, NEC COMMISSION 1, 16 (Oct. 2017), http://nec-commission.com/app/uploads/2018/03/NEC-One-Year-Implementation-Plan-FY18.pdf.

practices documentation; training program for railway workers and dispatchers; and operations management plans and procedures to be used after system acceptance.[108]

All Other Amtrak Programs/Projects – Scopes	FY19 Proposed Budget
C.EN.101714. CETC AMTRAK SYSTEM-MOFW ENHANCED EMPLOYEE PROTECTION SYSTEM. Implement a system to enhance roadway worker protection when working on track under foul time or track out of service. The system will provide roadway workers with an authorization code that corresponds to the blocking protection applied in the CETC control system. Removal of the protection by the CETC train dispatcher will require the authorization code be provided by the roadway worker. The system will utilize modifications to the CETC System platform functionality and mobile devices assigned to roadway workers. Deliverables: • EEPS operating practices documentation; • Modification to each CETC System to provide EEPS functionality: - Wilmington CETC (Mid-Atlantic Division) - Boston CETC (NH to Boston, Springfield Line and MBTA Lines) - NY CETC West - PSCC - CETC Hudson-Albany Line • EEPS mobile devices for roadway workers; • Training program for roadway workers and dispatchers; • Operations management plans and procedures to be used after system acceptance;	$224,007

201. SEPTA's implementation of the RailwayNet^{SM} system/AIM system and/or other same or similar system or method provides railway workers with an authorization code that corresponds to the blocking protection applied in the CTC control system.

202. SEPTA's implementation the RailwayNet^{SM} system/AIM system and/or other same or similar system or method requires the authorization code be provided by the railway worker be entered into the control system in order to remove of the protection by the CTC train dispatcher.

203. SEPTA's implementation of the RailwayNet^{SM} system/AIM system and/or other same or similar system or method utilize modifications to the CTC System platform functionality and mobile devices assigned to railway workers.

204. The RailwayNet^{SM}/AIM system and/or other same or similar system or method, as implemented by SEPTA, that places track sections in "foul time" is an example of a

[108] *NEC One-Year Plan 2019* at 233.

"processor controlling, by said centralized control operation one or more interlocks dispersed in said plural railways of said railway network, to block railway traffic to one or more specified track sections" as recited in this claim element. Specifically, FRA regulations 49 C.F.R. § 214.323 defines "foul time" as "a method of establishing working limits on controlled track in which a roadway worker is notified by the train dispatcher or control operator that *no trains will operate within a specific segment of controlled track until the roadway worker reports clear of the track*." Because SEPTA, through its implementation of the RailwayNet^{SM}/AIM system and/or other same or similar system or method, has the ability to place tracks in foul time, it includes the capability to "block railway traffic to one or more specified track sections." Moreover, in order to place a track segment in "foul time," the system must contain "a processor for controlling a plurality of track sections in the railway network, wherein each track section is associated with a corresponding interlock and is disposed in any of said plural railways of said railway network that is managed by centralized control operation from the railway control apparatus, the processor controlling, by said centralized control operation, one or more interlocks amongst the plurality of railway interlocks dispersed in said plural railways of said railway network" to permit the dispatcher to establish the blocking protection.

205. SEPTA operates a control center which is "a centralized facility that manages the safe and efficient movement of all of SEPTA's operating modes and provides customer service alerts to our passengers."[109] The control center functions include, *inter alia*, "Railroad Control" whereby "[t]he Railroad Control Center utilizes a Centralized Train Control System to provide realtime information and control functions to the 19th floor. Six (6) train dispatchers have the responsibility to operate switches and display signals on SEPTA-controlled territory, managing

[109] *Fiscal Year 2018 Operating Budget*, SEPTA (available at https://planning.septa.org/wp-content/uploads/2022/07/Operating-Budget-FY2018.pdf) at 97-98.

the movement of 780 scheduled trains a day."[110]

206. SEPTA's control center, shown below,[111] includes a number of user terminals through which train dispatchers control the movement of trains, including by placing blocks on specified track sections.

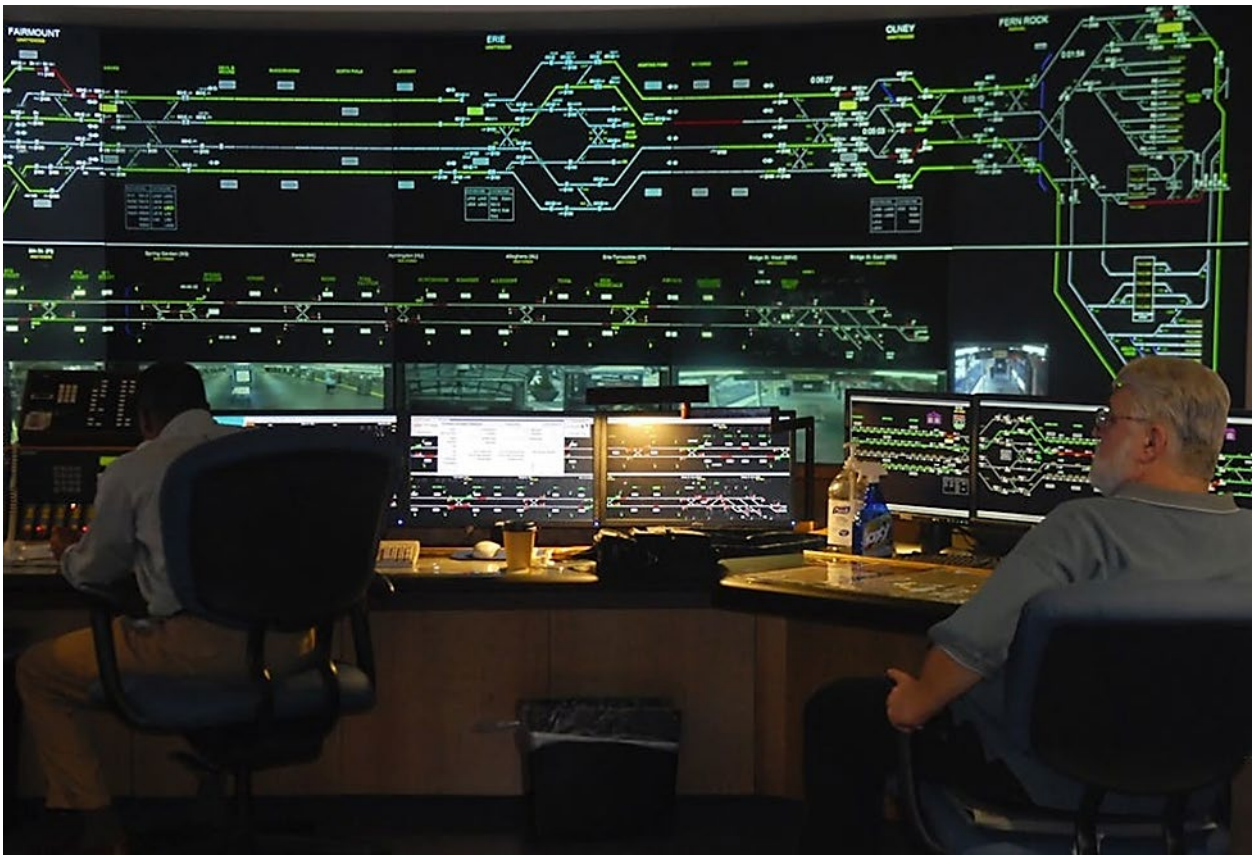

207. The AIM system provides "train monitoring and control," automatic route setting/automatic routing," "automatic traffic regulation," and "bulletins, authorities, and restrictions management," as shown in the image below.[112] One or more of these functionalities

[110] *Id.* at 98.
[111] Pratima Bhattacharyya, *Reporter's Notebook: Taking a look at SEPTA control,* DAILY PENNSYLVANIAN (Oct. 5, 2010), https://www.thedp.com/article/2010/10/reporters_notebook_taking_a_look_at_septa_control.
[112] *Intelligence-Based Rail Solutions*, Collins Aerospace, https://web.archive.org/web/20211122013021/https://www.collinsaerospace.com/-/media/project/collinsaerospace/collinsaerospace-website/product-assets/marketing/r/rail/arinc-rail-solutions-for-passengers.pdf?rev=e7e5ddbff2de4154ba265f03e27f14d3; *Advanced Information Management (AIM) Rail Dispatch*, WABTEC, https://www.wabteccorp.com/digital-intelligence/signaling-and-train-control/dispatch/advanced-information-management-aim-rail-dispatch (last visited June 27, 2024).

encompasses the claimed "block railway traffic" part.

Centralized Traffic Control and SCADA

Collins designs and integrates state-of-the-art rail control solutions using our ARINC Advanced Information Management (AIM®) platform. AIM serves as an end-to-end solution for all rail control requirements, including SCADA, Centralized Traffic Control, Positive Train Control (PTC) and control center integration. Highly flexible and feature-rich, AIM enables railroads to maximize operational efficiency, cost-effectiveness and safety, all while providing an environment protected by the latest tools and techniques in cybersecurity.

KEY AREAS OF EXPERTISE

- Train monitoring and control
- Automatic train tracking
- Automatic route setting/ automatic routing
- Automatic traffic regulation and schedule deviation
- Schedule management
- Integrated yard management
- Bulletins, authorities and restrictions management
- Employee in Charge (EIC) terminals
- Emergency Operating Procedures (EOP)
- Power planning
- Playback and simulation
- Data acquisition
- Interface integration

208. The RailwayNet^{SM}/AIM system and/or other same or similar system or method, as implemented by SEPTA, is a SaaS and IaaS product that provides "full-featured network management and infrastructure, hardware, network, operating systems, and applications for fault, performance, security and configuration management."[113] Additionally, RailwayNet^{SM} is "designed to help meet the availability standards required for PTC operations."[114] Because RailwayNet^{SM} is designed to support railroads to meet the PTC requirements, RailwayNet^{SM} should be configured to manage train movements, including placing blocks on one or more sections of railway track to prevent trains from traversing the one or more sections of railway track.

[113] White Paper at 6.
[114] *Id.*

209. In order to comply with and implement FRA's recommended regulations (communication-based/processor-based train control technology designed to address a number of railway safety issues including train-to-train collisions, over-speed derailments, incursions into established work-zone limits, and train movement through a main-line switch that is in an improper position), RailwayNet^{SM}/AIM system and/or other same or similar system or method is configured to place a block on one or more specified sections of railway track to prevent trains from traversing the one or more sections of railway track.[115]

210. Accordingly, SEPTA's implementation of the RailwayNet^{SM}/AIM system and/or other same or similar system or method includes "a processor for controlling a plurality of track sections in the railway network, wherein each track section is associated with a corresponding interlock and is disposed in any of said plural railways of said railway network that is managed by centralized control operation from the railway control apparatus, the processor controlling, by said centralized control operation, one or more interlocks amongst the plurality of railway interlocks dispersed in said plural railways of said railway network, to block railway traffic to one or more specified track sections."

211. SEPTA's implementation of the RailwayNet^{SM}/AIM system and/or other same or similar system or method further includes "a memory device storing computer-executable instructions."

212. RailwayNet^{SM}/AIM system and/or other same or similar system or method, which SEPTA uses, improves rail safety. More specifically, "[t]his system refers to communication-based/processor-based train control technology designed to address a number of rail safety issues, including train-to-train collisions, over-speed derailments, incursions into established

[115] *See* Final Report at 14; *see also NEC One-Year Plan 2019* at 233.

work-zone limits, and train movement through a main-line switch that is in an improper position."[116]

213. SEPTA's implementation of the RailwayNet℠ system/AIM system and/or other same or similar system or method provides railway workers with an authorization code that corresponds to the blocking protection applied in the CTC control system via their mobile devices.

214. SEPTA's implementation of the RailwayNet℠ system/AIM system and/or other same or similar system or method requires the authorization code be entered into the CTC control system order to remove of the protection by the train dispatcher.

215. SEPTA's implementation of the RailwayNet℠ system/AIM system and/or other same or similar system or method utilizes modifications to the CTC system platform functionality and mobile devices assigned to railway workers.

216. Amtrak budgeted an additional $224,007 in FY19 for copying SEPTA's system to

[116] White Paper at 3.

enhance railway worker protection when working on track under foul time or track out of service. The system provides railway workers with an authorization code that corresponds to the blocking protection applied in the CTC control system via their mobile devices. Removal of the protection by the CTC train dispatcher will require the authorization code be provided by the railway worker. The system will utilize modifications to the CTC System platform functionality and mobile devices assigned to railway workers. The deliverables to Amtrak included modification to each CTC system to provide enhanced employee protection system functionality in numerous CTC systems, and also included mobile devices for railway workers; operating practices documentation; training program for railway workers and dispatchers; and operations management plans and procedures to be used after system acceptance.[117]

217. In a report submitted to the U.S. Department of Transportation, it was illustrated that the claimed railway control apparatus as the "back office" in the below diagram.[118]

[117] *NEC One-Year Plan 2019* at 233.
[118] Final Report at 11.

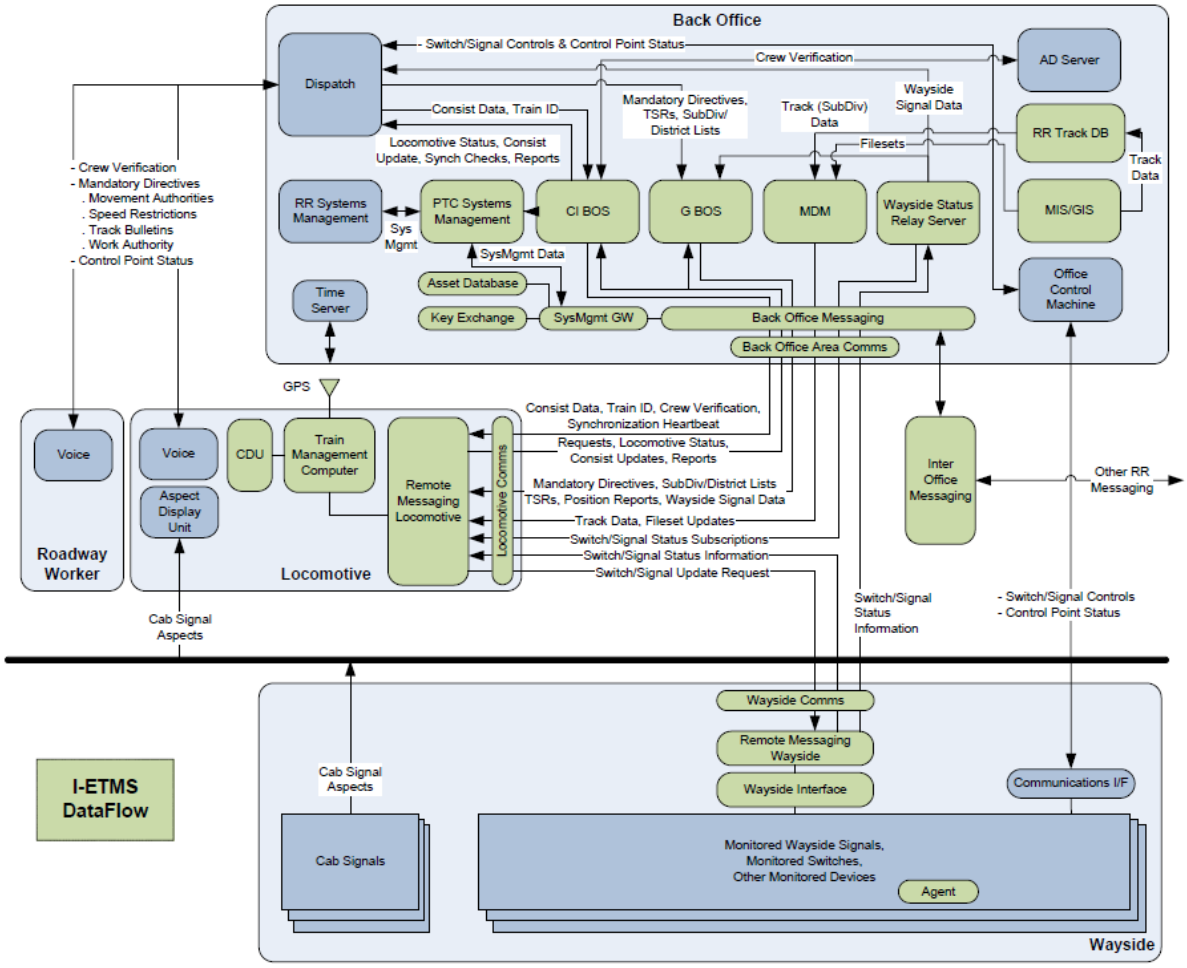

Figure 2 I-ETMS PTC Message Flows

218. SEPTA purchased mobile devices for its railway workers and implemented a system whereby its CTC system sends authorization codes to the railway workers.

219. Amtrak, for its implementation of the SEPTA system, purchased mobile devices for its railway workers and implemented a system whereby its CTC system sends authorization codes to the railway workers. In order to know which mobile device to send the authorization code to, the RailwayNet^{SM}/AIM system, as implemented by Amtrak, must have a memory device capable of storing computer-executable instructions.[119]

[119] *NEC One-Year Plan 2019* at 233.

All Other Amtrak Programs/Projects – Scopes	FY19 Proposed Budget
C.EN.101714. CETC AMTRAK SYSTEM-MOFW ENHANCED EMPLOYEE PROTECTION SYSTEM. Implement a system to enhance roadway worker protection when working on track under foul time or track out of service. The system will provide roadway workers with an authorization code that corresponds to the blocking protection applied in the CETC control system. Removal of the protection by the CETC train dispatcher will require the authorization code be provided by the roadway worker. The system will utilize modifications to the CETC System platform functionality and mobile devices assigned to roadway workers. Deliverables: • EEPS operating practices documentation; • Modification to each CETC System to provide EEPS functionality: - Wilmington CETC (Mid-Atlantic Division) - Boston CETC (NH to Boston, Springfield Line and MBTA Lines) - NY CETC West - PSCC - CETC Hudson-Albany Line • EEPS mobile devices for roadway workers; • Training program for roadway workers and dispatchers; • Operations management plans and procedures to be used after system acceptance;	$224,007

220. According to Amtrak's Northeast Corridor Annual Report for fiscal year 2017, Amtrak allocated more than $420,000 in copying SEPTA's enhanced employee protection functionality in the Northeast Corridor through its implementation of RailwayNet^{SM}.[120] It also specifies providing back-office infrastructure and messaging, including "[s]torage and delivery of crew and consist information, train IDs and clearances."[121]

221. The RailwayNet^{SM}/AIM system and/or other same or similar system or method, implemented by SEPTA is a SaaS and IaaS product that provides "full-featured network management and infrastructure, hardware, network, operating systems, and applications for fault, performance, security and configuration management."[122] It additionally specifies enabling ITC PTC interoperability and compliance with I-ETMS systems.[123]

222. The RailwayNet^{SM} system supports I-ETMS message flows, including communications with railway workers to communicate crew verification and mandatory

[120] *Northeast Corridor Annual Report: Operations and Infrastructure*, NEC COMMISSION 1, 49 (April 2018), https://nec-commission.com/app/uploads/2018/04/NEC-Annual-Report-FY17.pdf.
[121] White Paper at 7.
[122] *Id.* at 6.
[123] Final Report at 43.

directives.[124]

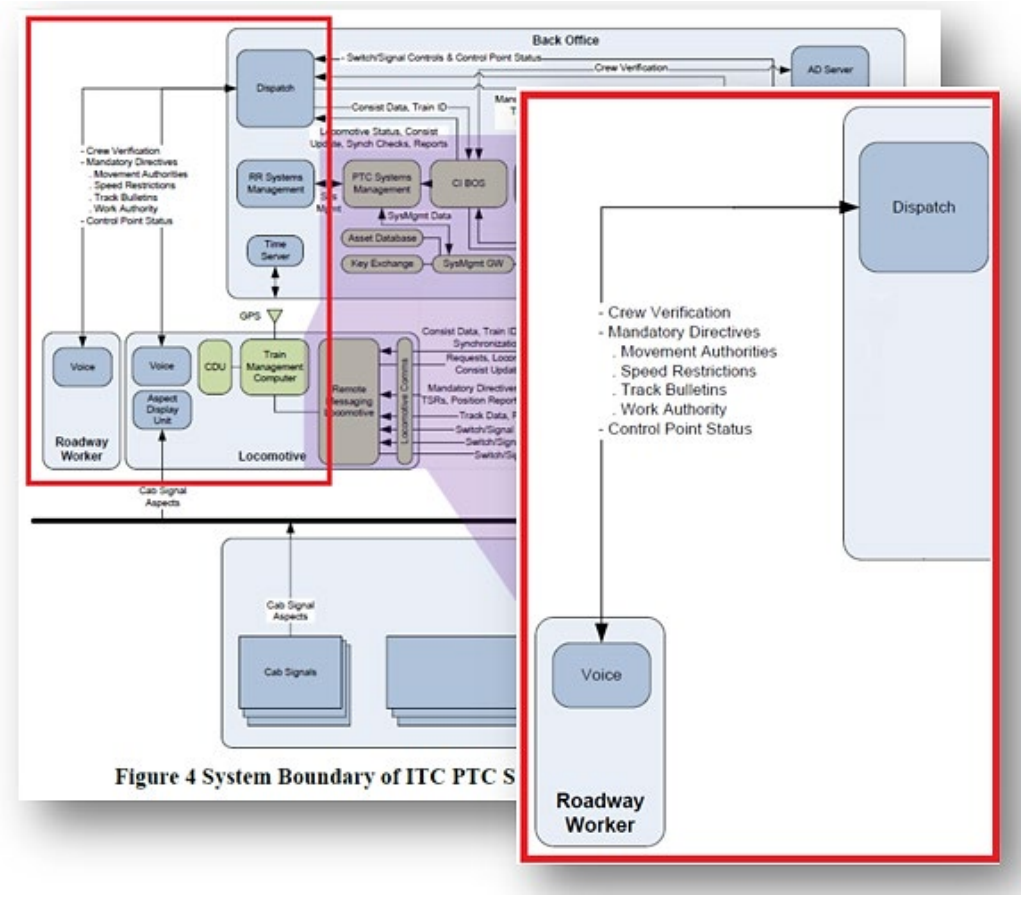

223. Likewise, RailwayNet[SM] "offers reliable, tailored, and scalable PTC messaging. Utilizing VHF, cellular, Wi-Fi and MPLS, RailwayNet[SM] PTC delivers initialization messages, crew . . . ."[125]

224. SEPTA purchased mobile devices for its railway workers and implemented a system whereby its CTC system sends authorization codes to the railway workers.

225. According to Amtrak's 2019 FY plan, it has implemented or is in the process of copying SEPTA's enhanced employee protection system that operates by "provid[ing] roadway

[124] Final Report at 14.
[125] *RailwayNet Positive Train Control Communication Solution*, WABTEC, https://www.wabteccorp.com/digital-intelligence/signaling-and-train-control/communications/railwaynet-positive-train-control-communication-solution (last visited June 27, 2024).

workers with an authorization code that corresponds to the blocking protection applied in the . . . [CTC] control system. Removal of the protection by the . . . [CTC] train dispatcher will require the authorization code to be provided by the roadway worker."[126] In order to provide the railway workers with an authorization code, the system must have a memory device capable of storing computer-executable instructions.

All Other Amtrak Programs/Projects – Scopes	FY19 Proposed Budget
C.EN.101714. CETC AMTRAK SYSTEM-MOFW ENHANCED EMPLOYEE PROTECTION SYSTEM. Implement a system to enhance roadway worker protection when working on track under foul time or track out of service. The system will provide roadway workers with an authorization code that corresponds to the blocking protection applied in the CETC control system. Removal of the protection by the CETC train dispatcher will require the authorization code be provided by the roadway worker. The system will utilize modifications to the CETC System platform functionality and mobile devices assigned to roadway workers. Deliverables: • EEPS operating practices documentation; • Modification to each CETC System to provide EEPS functionality: - Wilmington CETC (Mid-Atlantic Division) - Boston CETC (NH to Boston, Springfield Line and MBTA Lines) - NY CETC West - PSCC - CETC Hudson-Albany Line • EEPS mobile devices for roadway workers; • Training program for roadway workers and dispatchers; • Operations management plans and procedures to be used after system acceptance;	$224,007

226. Amtrak budgeted $224,007 as FY19 Proposed Budget for copying SEPTA's enhanced employee protection system that will "provide roadway workers with an authorization code that corresponds to the blocking protection applied in the . . . [CTC] control system."[127]

[126] *NEC One-Year Plan 2019* at 233.
[127] *Id.*

All Other Amtrak Programs/Projects – Scopes	FY19 Proposed Budget
C.EN.101714. CETC AMTRAK SYSTEM-MOFW ENHANCED EMPLOYEE PROTECTION SYSTEM. Implement a system to enhance roadway worker protection when working on track under foul time or track out of service. The system will provide roadway workers with an authorization code that corresponds to the blocking protection applied in the CETC control system. Removal of the protection by the CETC train dispatcher will require the authorization code be provided by the roadway worker. The system will utilize modifications to the CETC System platform functionality and mobile devices assigned to roadway workers. Deliverables: • EEPS operating practices documentation; • Modification to each CETC System to provide EEPS functionality: - Wilmington CETC (Mid-Atlantic Division) - Boston CETC (NH to Boston, Springfield Line and MBTA Lines) - NY CETC West - PSCC - CETC Hudson-Albany Line • EEPS mobile devices for roadway workers; • Training program for roadway workers and dispatchers; • Operations management plans and procedures to be used after system acceptance;	$224,007

227. The RailwayNet^{SM}/AIM system and/or other same or similar system or method implemented by SEPTA specifies providing back office infrastructure and messaging, including "[s]torage and delivery of crew and consist information, train IDs and clearances."[128] It further specified enabling ITC PTC interoperability and compliance with I-ETMS systems.[129] Because I-ETMS systems require communication of crew verification and employee authentication, SEPTA maintains electronic contact addresses of the railway field workers from a rail personnel contact database. RailwayNet^{SM} messaging functions also include: "[k]ey exchange server," described as "[s]ecurity keys with data store."[130]

[128] *See* White Paper at 7.
[129] *See* Final Report at 43.
[130] White Paper at 7.

A summary of the ARINC RailwayNet PTC hosting service functionality is shown below.

Messaging functions	Description	Included
Back-office messaging	Message transmission for the railroad back office	•*
Inter-office messaging	Message transmission between assets and railroad back offices in support of train initialization	•*
Systems management gateway	Messaging systems management	•
Systems management	Remote asset monitoring and control	Optional
Back-office area communications	Communications infrastructure at the Annapolis facility in support of railroad remote asset connectivity via cellular and internet connections	•
Key exchange server	Security keys with data store	•

228. Moreover, the RailwayNet^{SM} system/AIM system and/or other same or similar system or method, as implemented by SEPTA, specifies providing back-office infrastructure and messaging that allows railway workers to communicate, inter alia, crew verification and mandatory directives with the dispatch.[131]

[131] Final Report at 14.

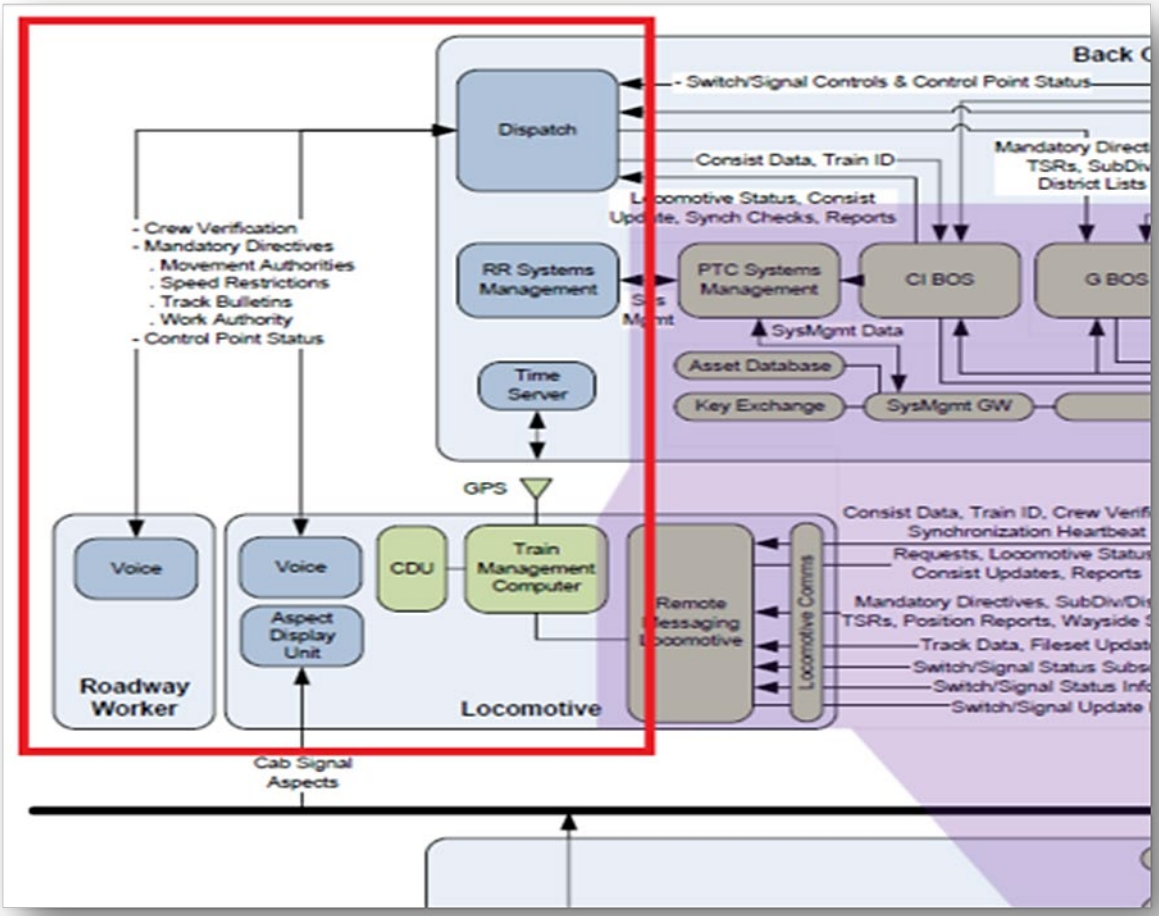

229. Additionally, the RailwayNet^{SM} serves as a node on a network of railroads, enabling interoperability and electronic communications connectivity to the network.[132]

230. Accordingly, SEPTA's implementation of the RailwayNet^{SM}/AIM system and/or other same or similar system or method includes "a memory device storing computer-executable instructions."

231. SEPTA's implementation of the RailwayNet^{SM}/AIM system and/or other same or similar system or method includes a railway control apparatus that executes computer-executable instructions to "receive a selection of at least one track section amongst the plurality of track

[132] *Id.* at 4.

sections."

232. SEPTA's implementation of the RailwayNet^{SM}/AIM system and/or other same or similar system or method is a CTC system which, by definition, is configured for centralized control of traffic of a centrally controllable railway network including plural railways and a plurality of railway traffic interlocks dispersed in the plural railways and controls access to the railway tracks.[133] Further, SEPTA's implementation of the RailwayNet^{SM}/AIM system and/or other similar system can place tracks in "foul time."

233. Further, as illustrated by Amtrak's implementation of "EEPS", which is a copy of SEPTA's system, the system can place tracks in "foul time."

All Other Amtrak Programs/Projects – Scopes	FY19 Proposed Budget
C.EN.101714. CETC AMTRAK SYSTEM-MOFW ENHANCED EMPLOYEE PROTECTION SYSTEM. Implement a system to enhance roadway worker protection when working on track under foul time or track out of service. The system will provide roadway workers with an authorization code that corresponds to the blocking protection applied in the CETC control system. Removal of the protection by the CETC train dispatcher will require the authorization code be provided by the roadway worker. The system will utilize modifications to the CETC System platform functionality and mobile devices assigned to roadway workers. Deliverables: • EEPS operating practices documentation; • Modification to each CETC System to provide EEPS functionality: - Wilmington CETC (Mid-Atlantic Division) - Boston CETC (NH to Boston, Springfield Line and MBTA Lines) - NY CETC West - PSCC - CETC Hudson-Albany Line • EEPS mobile devices for roadway workers; • Training program for roadway workers and dispatchers; • Operations management plans and procedures to be used after system acceptance;	$224,007

234. Foul time is defined as "a method of establishing working limits on controlled track in which a roadway worker is notified by the train dispatcher or control operator that no trains will operate within a specific segment of controlled track until the roadway worker reports clear of the track." 49 C.F.R. Part 214.7. The "specified segments" referred to in the rule are the "selection of at least one track section amongst the plurality of track sections" referred to in this claim element.

[133] *Fiscal Year 2018 Operating Budget*, SEPTA (available at https://planning.septa.org/wp-content/uploads/2022/07/Operating-Budget-FY2018.pdf) at 98.

235. In a report submitted to the U.S. Department of Transportation, it was illustrated that the claimed railway control apparatus as the "back office" in the below diagram.[134]

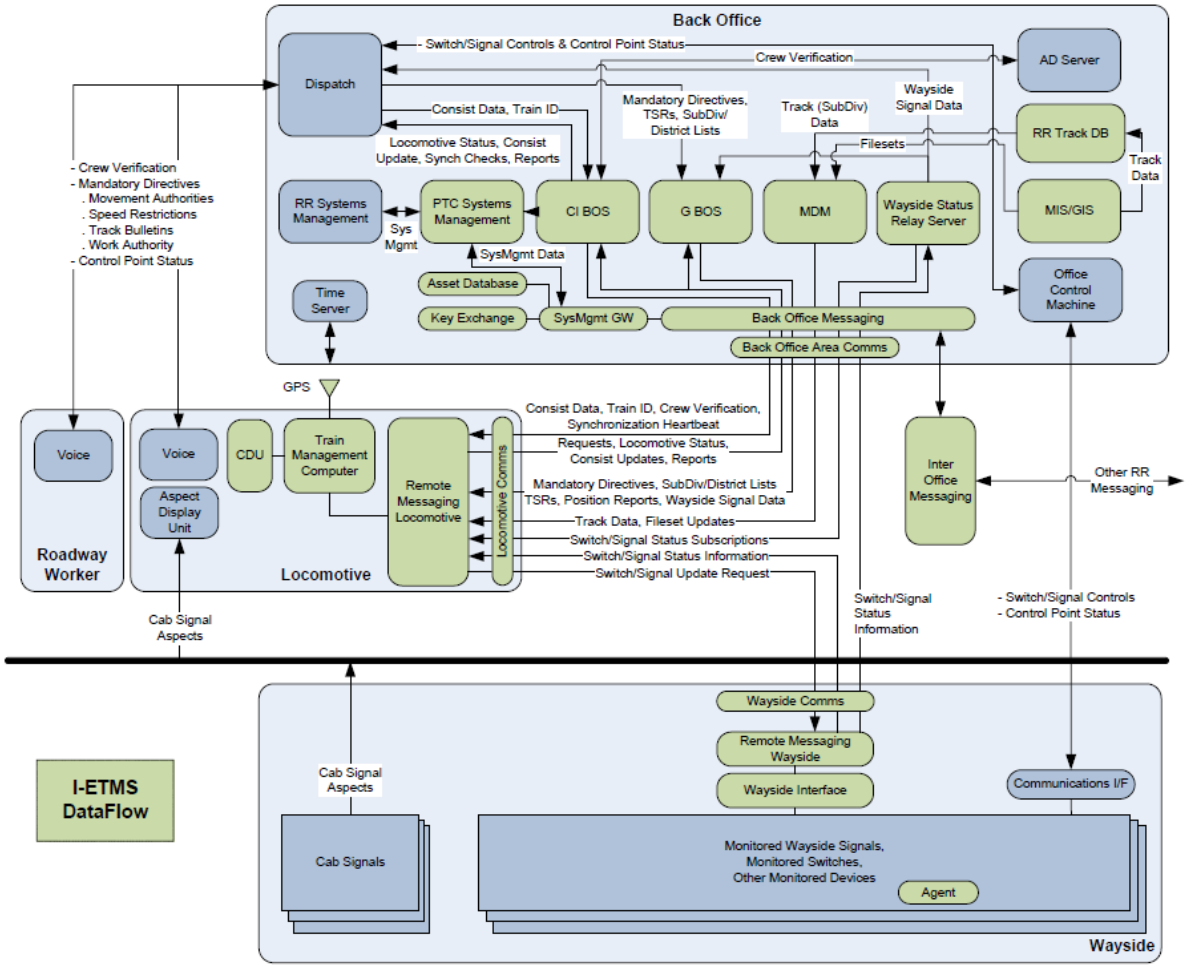

Figure 2 I-ETMS PTC Message Flows

236. According to Amtrak's Northeast Corridor Annual Report for fiscal year 2017, Amtrak allocated more than $420,000 in copying the SEPTA's enhanced employee protection functionality in the Northeast Corridor through its implementation of RailwayNet^{SM}.[135] It also specifies providing back office infrastructure and messaging, including "[s]torage and delivery of

[134] Final Report at 11.
[135] *Northeast Corridor Annual Report: Operations and Infrastructure*, NEC COMMISSION 1, 49 (April 2018), https://nec-commission.com/app/uploads/2018/04/NEC-Annual-Report-FY17.pdf.

crew and consist information, train IDs and clearances."[136]

C.EN.101711	FEN AMTRAK NEC - FENCE UPGRADES	3,082,806	1,446,696		
C.EN.101713	RAIL AMTRAK NEC - INSULATED JOINT REPLACEMENT PROGRAM	2,577,715	1,168,866	38,720	
C.EN.101714	CETC AMTRAK SYSTEM-MOFW ENHANCED EMPLOYEE PROTECTION SYSTEM	421,503	409,692		
C.EN.101732	RAD AMTRAK NEC - RADIO SYSTEM UPGRADES	-	-		
C.EN.101737	STA PENN STATION NY - STATION CHILLED WATER SYSTEM UPGRADE	-	-		
C.EN.201034	ACSE AMTRAK OWNED-POSITIVE TRAIN CONTROL PTC INSTALLATION	3,150,755	3,023,578		
C.EN.201264	POLE ZOO TO PAOLI - CATENARY STRUCTURE REPLACEMENT DESIGN	71,846	12,551		
C.TR.100074	STA NEW ENGLAND DIV - INSTALL TRAIN APPROACH MESSAGE SYS	286,337	133,789	152,547	

Northeast Corridor Commission | 49

237. RailwayNet[SM] system supports I-ETMS message flows, including communications with railway workers to communicate crew verification and mandatory directives.[137]

[136] White Paper at 7.
[137] Final Report at 14.

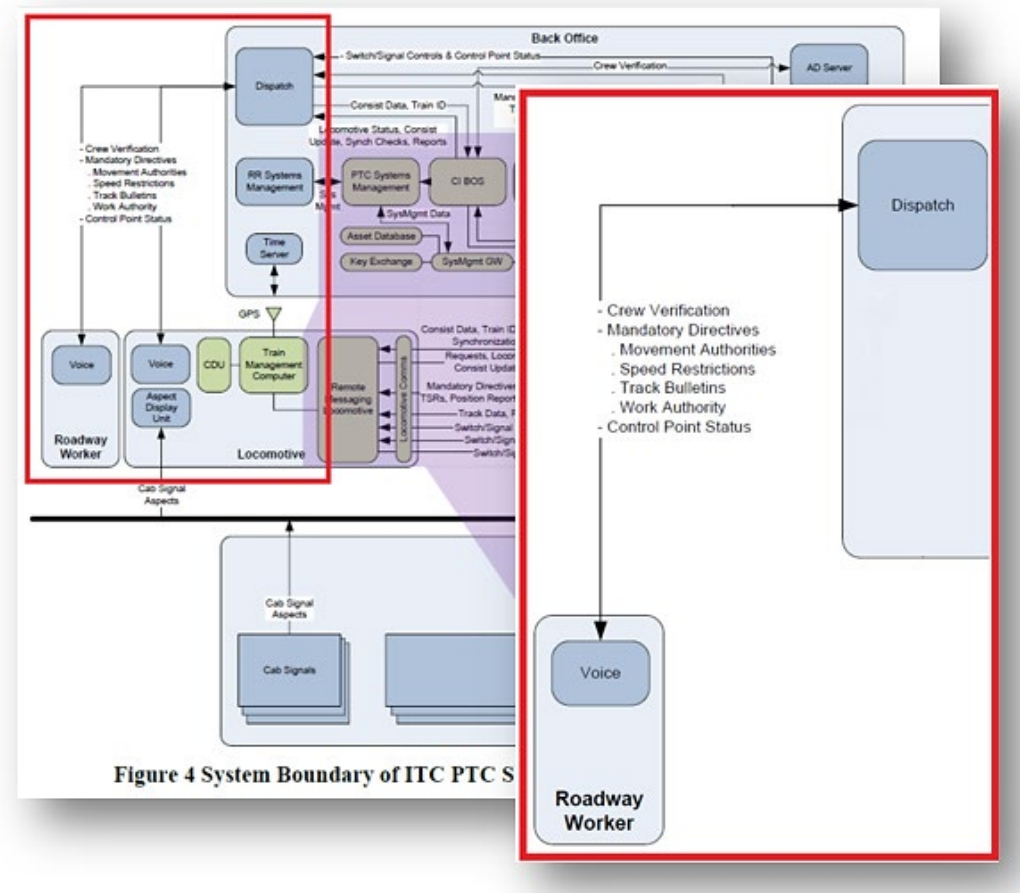

238. Likewise, RailwayNet[SM] "offers reliable, tailored, and scalable PTC messaging. Utilizing VHF, cellular, Wi-Fi and MPLS, RailwayNet[SM] PTC delivers initialization messages, crew . . . ." [138]

239. In order for the "back office" to communicate with the rail workers to block railway traffic to one or more specified track sections, the system must be able to receive a selection of at least one track section amongst the plurality of track sections.

240. Accordingly, SEPTA's implementation of the RailwayNet[SM]/AIM system and/or other same or similar system or method includes a railway control apparatus that executes computer-executable instructions to "receive a selection of at least one track section amongst the

[138] *RailwayNet Positive Train Control Communication Solution*, WABTEC, https://www.wabteccorp.com/digital-intelligence/signaling-and-train-control/communications/railwaynet-positive-train-control-communication-solution (last visited June 27, 2024).

plurality of track sections."

241. SEPTA's implementation of the RailwayNet^{SM}/AIM system and/or other same or similar system or method includes a railway control apparatus that executes computer-executable instructions to "transmit a block signal to the corresponding interlock associated with the at least one selected track section, to place a block on the selected track section by said centralized control operation from the railway control apparatus." Train dispatchers in the control center have control over all interlockings at SEPTA.[139]

242. Amtrak budgeted $224,007 as FY19 Proposed Budget for copying SEPTA's enhanced employee protection system.

All Other Amtrak Programs/Projects – Scopes	FY19 Proposed Budget
C.EN.101714. CETC AMTRAK SYSTEM-MOFW ENHANCED EMPLOYEE PROTECTION SYSTEM. Implement a system to enhance roadway worker protection when working on track under foul time or track out of service. The system will provide roadway workers with an authorization code that corresponds to the blocking protection applied in the CETC control system. Removal of the protection by the CETC train dispatcher will require the authorization code be provided by the roadway worker. The system will utilize modifications to the CETC System platform functionality and mobile devices assigned to roadway workers. Deliverables: • EEPS operating practices documentation; • Modification to each CETC System to provide EEPS functionality: - Wilmington CETC (Mid-Atlantic Division) - Boston CETC (NH to Boston, Springfield Line and MBTA Lines) - NY CETC West - PSCC - CETC Hudson-Albany Line • EEPS mobile devices for roadway workers; • Training program for roadway workers and dispatchers; • Operations management plans and procedures to be used after system acceptance;	$224,007

243. The RailwayNet^{SM}/AIM system and/or other same or similar system or method, as implemented by SEPTA, that places track sections in "foul time" "transmit[s] a block signal to the corresponding interlock associated with the at least one selected track section, to place a block on the selected track section by said centralized control operation from the railway control apparatus." as recited in this claim element. Specifically, FRA regulations 49 C.F.R. § 214.323 defines "foul time" as "a method of establishing working limits on controlled track in which a

[139] *Fiscal Year 2018 Operating Budget*, SEPTA (available at https://planning.septa.org/wp-content/uploads/2022/07/Operating-Budget-FY2018.pdf) at 97-98.

roadway worker is notified by the train dispatcher or control operator that *no trains will operate within a specific segment of controlled track until the roadway worker reports clear of the track*." Because SEPTA, through its implementation of the RailwayNet[SM]/AIM system and/or other same or similar system or method, has the ability to place tracks in foul time, it includes an ability to place blocks.

244. The AIM system provides "train monitoring and control," "automatic route setting/automatic routing," "automatic traffic regulation," and "bulletins, authorities, and restrictions management."[140] One or more of these functionalities encompasses the claimed ability to place blocks.

Centralized Traffic Control and SCADA

Collins designs and integrates state-of-the-art rail control solutions using our ARINC Advanced Information Management (AIM®) platform. AIM serves as an end-to-end solution for all rail control requirements, including SCADA, Centralized Traffic Control, Positive Train Control (PTC) and control center integration. Highly flexible and feature-rich, AIM enables railroads to maximize operational efficiency, cost-effectiveness and safety, all while providing an environment protected by the latest tools and techniques in cybersecurity.

KEY AREAS OF EXPERTISE

- Train monitoring and control
- Automatic train tracking
- Automatic route setting/ automatic routing
- Automatic traffic regulation and schedule deviation
- Schedule management
- Integrated yard management
- Bulletins, authorities and restrictions management
- Employee in Charge (EIC) terminals
- Emergency Operating Procedures (EOP)
- Power planning
- Playback and simulation
- Data acquisition
- Interface integration

[140] *Intelligence-Based Rail Solutions*, Collins Aerospace, https://web.archive.org/web/20211122013021/https://www.collinsaerospace.com/-/media/project/collinsaerospace/collinsaerospace-website/product-assets/marketing/r/rail/arinc-rail-solutions-for-passengers.pdf?rev=e7e5ddbff2de4154ba265f03e27f14d3; *Advanced Information Management (AIM) Rail Dispatch*, WABTEC, https://www.wabteccorp.com/digital-intelligence/signaling-and-train-control/dispatch/advanced-information-management-aim-rail-dispatch (last visited June 27, 2024).

245. The RailwayNet^{SM}/AIM system and/or other same or similar system or method, as implemented by SEPTA, is a SaaS and IaaS product that provides "full-featured network management and infrastructure, hardware, network, operating systems, and applications for fault, performance, security and configuration management."[141] Additionally, RailwayNet^{SM} is "designed to help meet the availability standards required for PTC operations."[142] Because RailwayNet^{SM} is designed to support railroads to meet the PTC requirements, RailwayNet^{SM} is configured to manage train movements, including placing blocks on one or more sections of railway track to prevent trains from traversing the one or more sections of railway track.

246. In order to comply with and implement FRA's recommended regulations (communication-based/processor-based train control technology designed to address a number of railway safety issues including train-to-train collisions, over-speed derailments, incursions into established work-zone limits, and train movement through a main-line switch that is in an improper position), RailwayNet^{SM}/AIM system and/or other same or similar system or method is configured to place a block on one or more sections of railway track to prevent trains from traversing the one or more sections of railway track.[143]

247. Accordingly, SEPTA's implementation of the RailwayNet^{SM}/AIM system and/or other same or similar system or method includes a railway control apparatus that executes computer-executable instructions to "transmit a block signal to the corresponding interlock associated with the at least one selected track section, to place a block on the selected track section by said centralized control operation from the railway control apparatus."

248. SEPTA's implementation of the RailwayNet^{SM}/AIM system and/or other same or

---

[141] White Paper at 6.
[142] *Id.*
[143] *See* Final Report at 14; *see also NEC One-Year Plan 2019* at 233.

similar system or method includes a railway control apparatus that executes computer-executable instructions to "generate a secret code associated with the at least one selected track section."

249. Amtrak budgeted $224,007 as FY19 Proposed Budget for copying SEPTA's enhanced employee protection system that will "provide roadway workers with an authorization code that corresponds to the blocking protection applied in the . . . [CTC] control system."[144]

All Other Amtrak Programs/Projects – Scopes	FY19 Proposed Budget
C.EN.101714. CETC AMTRAK SYSTEM-MOFW ENHANCED EMPLOYEE PROTECTION SYSTEM. Implement a system to enhance roadway worker protection when working on track under foul time or track out of service. The system will provide roadway workers with an authorization code that corresponds to the blocking protection applied in the CETC control system. Removal of the protection by the CETC train dispatcher will require the authorization code be provided by the roadway worker. The system will utilize modifications to the CETC System platform functionality and mobile devices assigned to roadway workers. Deliverables: • EEPS operating practices documentation; • Modification to each CETC System to provide EEPS functionality: - Wilmington CETC (Mid-Atlantic Division) - Boston CETC (NH to Boston, Springfield Line and MBTA Lines) - NY CETC West - PSCC - CETC Hudson-Albany Line • EEPS mobile devices for roadway workers; • Training program for roadway workers and dispatchers; • Operations management plans and procedures to be used after system acceptance;	$224,007

250. The RailwayNet^{SM}/AIM system and/or other same or similar system or method, implemented by SEPTA, specifies providing back office infrastructure and messaging, including "[s]torage and delivery of crew and consist information, train IDs and clearances."[145] It further specifies enabling ITC PTC interoperability and compliance with I-ETMS systems.[146] Because I-ETMS systems require communication of crew verification and employee authentication, SEPTA maintains electronic contact addresses of the railway field workers from a rail personnel contact database. RailwayNet^{SM} messaging functions also include: "[k]ey exchange server," described as "[s]ecurity keys with data store."[147]

[144] *NEC One-Year Plan 2019* at 233.
[145] *See* White Paper at 7.
[146] *See* Final Report at 43.
[147] White Paper at 7.

A summary of the ARINC RailwayNet PTC hosting service functionality is shown below.

Messaging functions	Description	Included
Back-office messaging	Message transmission for the railroad back office	•*
Inter-office messaging	Message transmission between assets and railroad back offices in support of train initialization	•*
Systems management gateway	Messaging systems management	•
Systems management	Remote asset monitoring and control	Optional
Back-office area communications	Communications infrastructure at the Annapolis facility in support of railroad remote asset connectivity via cellular and internet connections	•
Key exchange server	Security keys with data store	•

251. Moreover, the RailwayNet[SM] system/AIM system and/or other same or similar system or method, as implemented by SEPTA, specifies providing back-office infrastructure and messaging that allows railway workers to communicate, inter alia, crew verification and mandatory directives with the dispatch.[148]

[148] Final Report at 14.

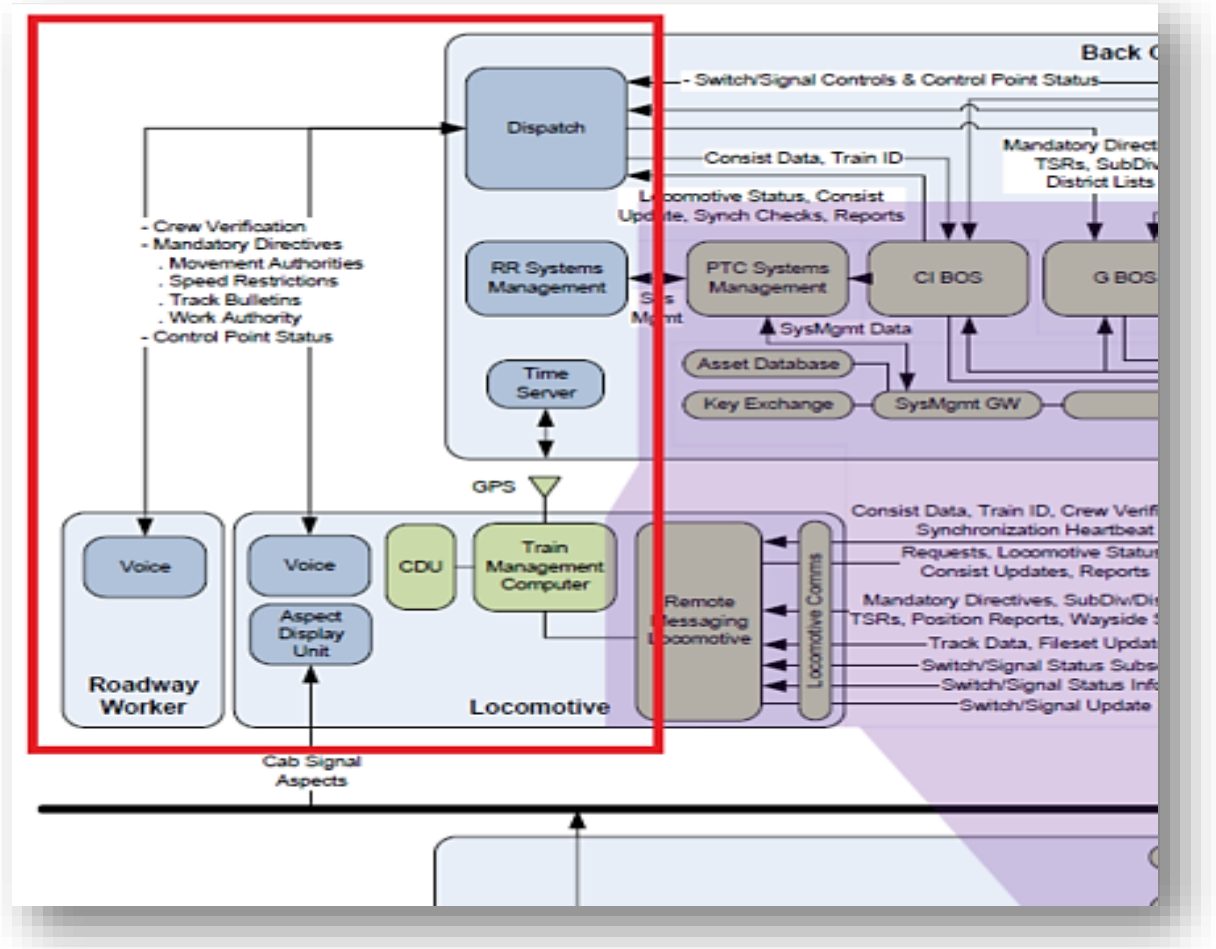

252. Accordingly, SEPTA's implementation of the RailwayNet^{SM}/AIM system and/or other same or similar system or method includes a railway control apparatus that executes computer-executable instructions to "generate a secret code associated with the at least one selected track section."

253. SEPTA's implementation of the RailwayNet^{SM}/AIM system and/or other same or similar system or method includes a railway control apparatus that executes computer-executable instructions to "transmit the secret code to a remote user terminal."

254. Amtrak budgeted $224,007 as FY19 Proposed Budget for copying SEPTA's enhanced employee protection system that will "provide roadway workers with an authorization

code that corresponds to the blocking protection applied in the . . . [CTC] control system."[149]

255. The RailwayNet^{SM}/AIM system and/or other same or similar system or method implemented by SEPTA specifies providing back office infrastructure and messaging, including "[s]torage and delivery of crew and consist information, train IDs and clearances."[150] It further specifies enabling ITC PTC interoperability and compliance with I-ETMS systems.[151] Because I-ETMS systems require communication of crew verification and employee authentication, SEPTA maintains electronic contact addresses of the railway field workers from a rail personnel contact database. RailwayNet^{SM} messaging functions also include: "[k]ey exchange server," described as "[s]ecurity keys with data store."[152]

A summary of the ARINC RailwayNet PTC hosting service functionality is shown below.

Messaging functions	Description	Included
Back-office messaging	Message transmission for the railroad back office	•*
Inter-office messaging	Message transmission between assets and railroad back offices in support of train initialization	•*
Systems management gateway	Messaging systems management	•
Systems management	Remote asset monitoring and control	Optional
Back-office area communications	Communications infrastructure at the Annapolis facility in support of railroad remote asset connectivity via cellular and internet connections	•
Key exchange server	Security keys with data store	•

256. Moreover, the RailwayNet^{SM} system/AIM system and/or other same or similar system or method, as implemented by SEPTA, specifies providing back-office infrastructure and messaging that allows railway workers to communicate, *inter alia*, crew verification and

[149] *NEC One-Year Plan 2019* at 233.
[150] *See* White Paper at 7.
[151] *See* Final Report at 43.
[152] White Paper at 7.

mandatory directives with the dispatch.[153]

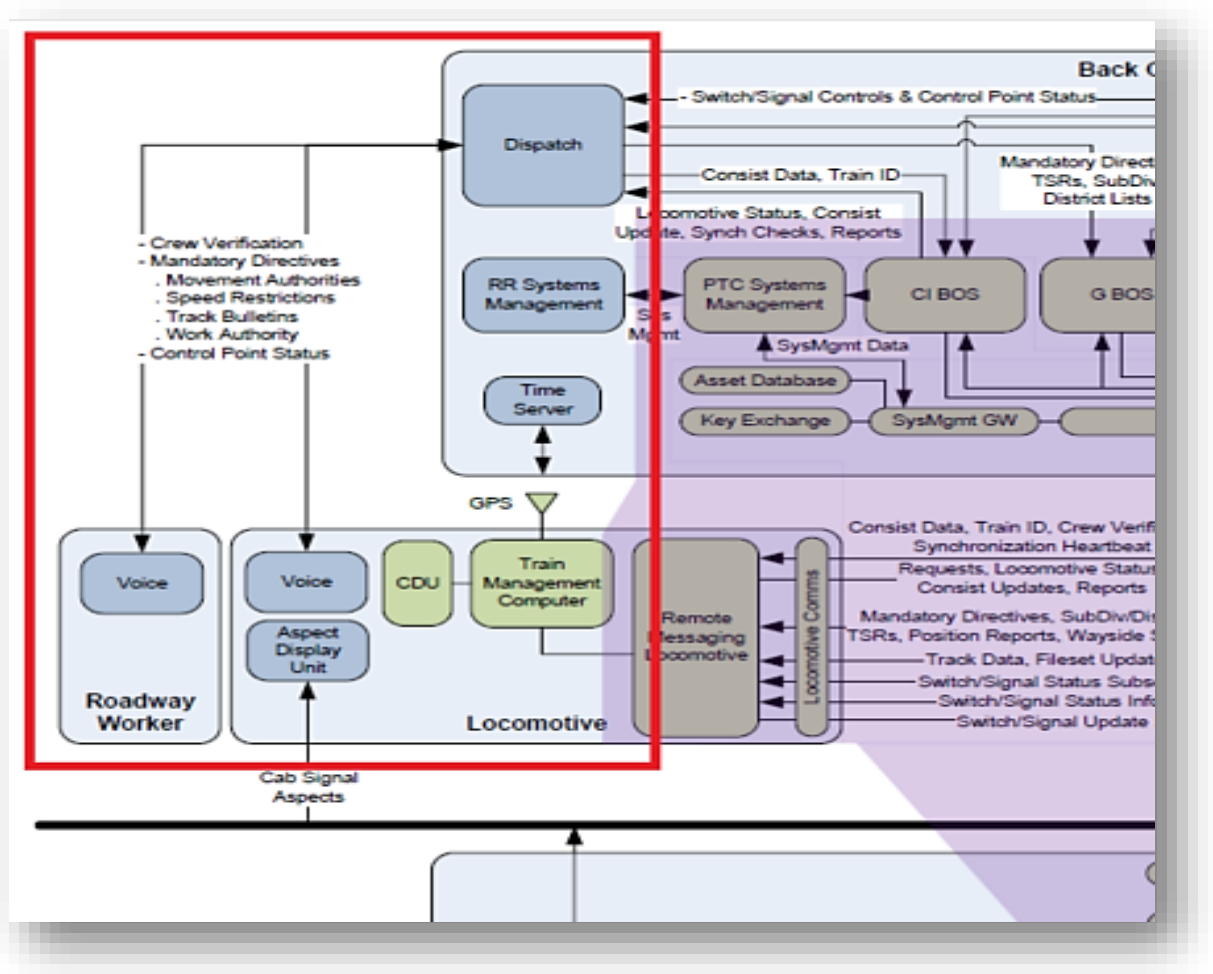

257. Accordingly, SEPTA's implementation of the RailwayNet^{SM}/AIM system and/or other same or similar system or method includes a railway control apparatus that executes computer-executable instructions to "transmit the secret code to a remote user terminal."

258. Therefore, SEPTA, through its implementation of the RailwayNet^{SM}/AIM system and/or other same or similar system or method, has infringed and continues to infringe at least claim 20 of the '115 patent.

259. As direct and proximate result of SEPTA's infringement of the '115 patent,

[153] Final Report at 14.

Railware has been injured and has been caused significant harm and financial damages.

260. SEPTA has also induced and continues to induce infringement of at least claim 20 of the ’115 patent in violation of 35 U.S.C. § 271(b).

261. SEPTA induces its users, and/or developers of its systems to infringe at least claim 20 of the ’115 patent, and does so with the specific intent, by providing instructions, directions, information, and/or knowledge on how to use its systems and/or incorporate its systems into other products (including both the RailwayNet/AIM systems and any similar systems or methods). For example, SEPTA instructs its dispatchers on how to use the system to infringe.

262. As a direct and proximate result of SEPTA’s infringement of the ’115 patent, Railware has been injured and has been caused significant harm and financial damages.

263. Railware has suffered and continues to suffer damages and irreparable harm as a result of SEPTA’s past and ongoing infringement. Unless and until SEPTA’s infringement is enjoined, Railware will continue to be damaged and irreparably harmed.

264. To the extent the marking requirements of 35 U.S.C. § 287 apply, SEPTA has had constructive knowledge of the ’115 patent at least since June 28, 2022. Moreover, SEPTA has had actual knowledge of the ’545 patent (of which the ’115 patent is a reissue) since at least December 15, 2016. SEPTA’s continued infringement on or after either date is in spite of the objectively high likelihood that its activities constitute infringement of a valid patent, and this risk was either known or so obvious that it should have been known to SEPTA. Thus, SEPTA’s continued infringement since at least as of June 28, 2022 is willful and deliberate.

265. Railware is entitled to all remedies at law and equity including, but not limited to, an injunction against SEPTA’s infringement of the ’115 patent pursuant to 35 U.S.C. § 283.

266. Railware is entitled to damages for SEPTA's infringement of the '115 patent including, but not limited to, damages pursuant to 35 U.S.C. §§ 284 and 285.

JURY DEMAND

Railware respectfully requests a jury trial on all triable issues.

REQUEST FOR RELIEF

Railware respectfully asks that the Court enter judgment in its favor as follows:

A. Judgment in favor of Railware and against SEPTA on each cause of action alleged herein;

B. Finding that SEPTA has infringed and is infringing the Asserted Patents;

C. Finding that SEPTA's infringement of the Asserted Patents has been and continues to be willful;

D. Awarding Railware damages adequate to compensate it for SEPTA's past and present infringement, but in no event less than a reasonable royalty;

E. Awarding an accounting and supplemental damages for those acts of infringement committed by SEPTA subsequent to the discovery cut-off date in this action through the date Final Judgment is entered;

F. Ordering that damages for infringement of the Asserted Patents be trebled as provided for by 35 U.S.C. § 284 for SEPTA's willful infringement of the Asserted Patents;

G. Finding that this case is exceptional;

H. Awarding Railware its attorneys' fees and costs, together with prejudgment and post-judgment interest;

I. A preliminary and permanent injunction against SEPTA's continued direct and indirect infringement;

J. To the extent injunctive relief is not awarded, awarding Railware damages adequate to compensate Railware for SEPTA's future infringement, but in no event less than a reasonable royalty; and

K. Any further relief that this Court deems just and proper.

Dated: July 8, 2024

Respectfully submitted,

By: *Joe H. Tucker, Jr.*

Joe H. Tucker Jr., Esquire
Leslie M. Greenspan, Esquire
Jessica A. Rickabaugh, Esquire
Scott E. Diamond, Esquire
TUCKER LAW GROUP, LLC
1801 Market Street, Suite 2500
Philadelphia, PA 19103
(215) 875-0609

Bryan J. Vogel (*pro hac vice* to be filed)
BVogel@RobinsKaplan.com
Derrick J. Carman (*pro hac vice* to be filed)
DCarman@RobinsKaplan.com
Travis K. Waller (*pro hac vice* to be filed)
TWaller@RobinsKaplan.com
ROBINS KAPLAN LLP
1325 Avenue of the Americas
Suite 2601
New York, New York 10019
(212) 980-7400

Attorneys for Plaintiff
Railware, Inc.