UNITED STATES DISTRICT COURT
SOUTHERN DISTRICT OF NEW YORK

RAILWAY, INC.,	:	
Plaintiff,	:	Case No.: 1:22-cv-5013-KPF
-against-	:	**AMENDED COMPLAINT**
NATIONAL RAILROAD PASSENGER CORPORATION D/B/A AMTRAK,	:	**JURY TRIAL REQUESTED**
	:	
Defendant.	:	

AMENDED COMPLAINT FOR PATENT INFRINGEMENT

Plaintiff Railware, Inc. ("Railware") files this complaint against defendant National Railroad Passenger Corporation d/b/a Amtrak ("Amtrak" or "Defendant") and alleges as follows:

INTRODUCTION

1. This lawsuit concerns Defendant's infringement of Railware's patents.

2. Railware produces one of the premier train traffic control systems in the world, Dispatch X. Among Railware's suite of tools in or for its train traffic control systems is its patented safety technology, the Enhanced Employee Protection System ("EEPS"). EEPS is designed to ensure the safety of track workers that must enter onto tracks to perform maintenance and repairs. During track work, trains are typically blocked from traversing sections of tracks that have railway workers on them. But like all human-controlled systems, these systems are subject to operator error, which can result in serious injury or death to railway workers. To protect against these high stakes for railway workers, EEPS forestalls errant train blocking, by placing the authority to lift a block in the hands of the railway worker on the tracks, thereby preventing the railway traffic controller or dispatcher from accidentally lifting a block

and endangering the railway worker(s). Whereas old systems placed the safety of the railway workers in the hands of a geographically remote dispatcher, EEPS places the safety of the railway workers in the hands of the workers themselves.

3. Railware's systems, including EEPS, are used on some of the busiest railroads in the country, including the Metro North Railroad and the Long Island Railroad. Millions of people rely on Railware's products to transport them safely every day.

PATENTS-IN-SUIT

4. Railware's owner and inventor of the patents-in-suit, Ross Pirtle, spent years developing EEPS. As a result of his years of effort and investment, Mr. Pirtle was awarded two United States patents: U.S. Pat. Nos. 9,517,782 (the "'782 patent") (a copy of which is attached as Exhibit A) and 9,403,545 (the "'545 patent"). Mr. Pirtle assigned the '782 and '545 patents to Railware. The '545 patent has since been reissued as two reissue patents: (1) U.S. Reissue Pat. No. RE47,835 (the "'835 patent") (a copy of which is attached as Exhibit B); and (2) U.S. Reissue Pat. No. RE49,115 (the "'115 patent") (a copy of which is attached as Exhibit C) (the '782 patent, the '835 patent, and the '115 patent are collectively referred to herein as the "Asserted Patents").

PARTIES

5. Railware is a corporation organized and existing under the laws of New York with its principal place of business located in Hauppauge, NY. Railware is the owner of all right, title, and interest in the Asserted Patents.

6. Railware is the creator of Dispatch X, one of the premier train traffic control systems in the world, used by some of the busiest railroads in the country, including the Metro North Railroad and the Long Island Railroad. Railware's owner is also the creator of the patented

EEPS technology, which saves railway workers' lives by placing the power to lift a block on a section of track in the hands of the railway workers themselves that are on the track.

7. Amtrak is a corporation organized and existing under the laws of Washington, D.C., and having its principal place of business in Washington, D.C. Amtrak is a federally chartered, for-profit corporation. Amtrak is operated as a for-profit company, rather than a public authority. Amtrak operates a nationwide rail network, serving more than 500 destinations in 46 states, the District of Columbia, and three Canadian provinces, on more than 21,400 miles of routes. Amtrak owns and operates at least 363 miles of the 457-mile Northeast Corridor ("NEC") spine between Washington and Boston, including in this District. For example, Amtrak operates the Penn Station Central Control ("PSCC") in Manhattan, NY from which Amtrak dispatchers control the movement of trains along NEC tracks.[1]

JURISDICTION AND VENUE

8. This Court has subject matter jurisdiction of the action pursuant to the patent laws of the United States, 35 U.S.C. § 1 *et seq.*, and pursuant to 28 U.S.C. § 1338 because Railware's claims against Amtrak both arise out of the patent laws of the United States and raise a federal question.

9. This Court has personal jurisdiction over Amtrak. As alleged herein, Amtrak has had continuous and systematic contacts with the state of New York, has purposely directed activities at the State of New York, and this action arises out of and relates to those activities. For example, Amtrak owns and operates at least 363 miles of track on the NEC, including all track

[1] *See* Edgar Sandoval, *A Look Inside The Penn Station Control Room Keeping Watch Over MTA's Summer Of Hell*, NY DAILY NEWS (July 25, 2017), https://www.nydailynews.com/new-york/penn-station-control-room-summer-hell-article-1.3355722; *see also*, Emma Whitford, *A Rare Peek Inside The Penn Station Central Control Room*, GOTHAMIST (July 25, 2017), https://gothamist.com/news/a-rare-peek-inside-the-penn-station-central-control-room.

between New Rochelle, NY and the NY/NJ state line, west of New York Penn Station. In Fiscal Year 2021, Amtrak invested $935 million in capital renewal and special projects in the New York City Metro area, including $378.7 million completing the East End Gateway, a new entrance into New York's Penn Station at 7th Avenue. Amtrak operates approximately 130-140 trains daily though New York. In FY19, Amtrak spent more than $213 million on goods and services in New York, including more than $148 million in New York City alone. Amtrak has represented that it operates two "major maintenance facilities" in New York, including Sunnyside Yard in New York City.[2] Amtrak has further represented:

> Amtrak and its partners are working together to create the future home of Amtrak's New York City passenger operations within the new Train Hall in Moynihan Station. Moynihan Station expands the nation's busiest train station, New York Penn Station, across 8th Avenue into the historic James A. Farley Post Office Building. Moynihan Station will offer enhanced passenger facilities for Amtrak's NEC and long-distance travelers, including accessibility for passengers with disabilities, all within a grand Train Hall featuring a sky-lit atrium. In concert with the forthcoming renovation of Penn Station, to better serve commuter rail passengers and Amtrak's intercity passenger arrivals, expansion of Amtrak's passenger services into the new Moynihan Station will relieve existing station crowding and improve passenger comfort and security.[3]

10. Venue is proper in this judicial district pursuant to 28 U.S.C. § 1400(b) because, as alleged herein, Amtrak has committed acts of infringement in this District and Amtrak maintains a regular and established place of business in this District. Specifically, Amtrak maintains the PSCC in this District, which is a regular and established place of business. According to Amtrak, at PSCC it "ha[s] 12 dispatchers … around the clock, 365 days a year . . . Christmas included."[4] Amtrak further operates out of the Moynihan Train Hall at Penn Station in

---

[2] https://www.amtrak.com/content/dam/projects/dotcom/english/public/documents/corporate/statefactsheets/NEWYORK19.pdf (last visited May 6, 2022).

[3] *Id.*

[4] Edgar Sandoval, *A Look Inside The Penn Station*.

Manhattan NY, including employing personnel, selling train tickets, boarding, unloading, and housing trains. Amtrak has represented that the Train Hall in Moynihan Station is "home of Amtrak's New York City passenger operations."[5] As to acts of infringement in this District, Amtrak's operation of its dispatch system in PSCC constitutes infringement of the Asserted Patents in this District as set forth herein. Specifically, Amtrak has and/or is operating one or both of Rockwell Collins' ARINC RailwayNet/Advanced Information Management ("AIM") platform and/or AMTEC[6] dispatch and centralized traffic control systems in PSCC, and/or other similar systems. Operation of these systems, as implemented by Amtrak, constitutes infringement of the Asserted Patents as set forth herein.

FACTUAL ALLEGATIONS

A. Railware and its Technology

11. Railware provides one of the premier train traffic control systems in the world, Dispatch X. Railware's systems are used by some of the busiest railroads in the country, including to direct trains at Grand Central Station and Penn Station. Railware's systems are the industry standard for traffic control and operations management. Dispatch X provides customers with high-definition graphics and point and click usability. It is scalable for everything from a local control panel on a single interlocking to an entire railroad. Railware supports all railroad protocols so customers can communicate with systems of any complexity in one high resolution, graphic interface.

---

[5] https://www.amtrak.com/content/dam/projects/dotcom/english/public/documents/corporate/statefactsheets/NEWYORK19.pdf (last visited May 6, 2022).

[6] Railware's allegations are not limited to these products. Any product used by Amtrak that implements functionality similar to that described herein is accused of infringement. Railware's identification of Rockwell Collins' ARINC RailwayNet/AIM platform and/or AMTEC dispatch and centralized traffic control systems is purely exemplary.

12. Among the many features offered by Railware's systems is its patented EEPS technology. EEPS was developed by Railware's owner and inventor on the Asserted Patents, Ross Pirtle, to save people's lives.

13. When railway tracks require maintenance, railway workers must physically enter the track area to perform the necessary maintenance. Entering an active track area poses grave risks to the railway workers, who are defenseless against train traffic. Over time, various safety systems were developed. Early systems included alarm systems, which would alert railway workers to incoming train traffic, ideally allowing them time to vacate the track area before the train approached that portion of the track and until the danger had passed. Such systems, however, proved inadequate to mitigate the risks to railway workers associated with train traffic.

14. The birth of centralized train control[7] ("CTC") systems provided a better option. A remote dispatcher could control the tracks used by trains. This control enabled the dispatcher to temporarily reroute trains away from track sections that were being worked on by railway workers. But these systems too suffered from certain drawbacks. Specifically, the blocking of track sections was controlled entirely by the remote dispatcher. Human error could and did lead to blocks being removed prematurely by the dispatcher, either because the dispatcher falsely believed that the railway work was complete, or because the dispatcher intended to remove a different block and mistakenly removed a block on a track section that was still undergoing work. This proved inadequate to mitigate the risks to railway workers associated with train traffic.

15. To overcome these limitations, Railware developed EEPS. EEPS forestalls errant blocking by requiring railway traffic controllers and employees on the ground to cooperate to lift

[7] Also known as centralized traffic control.

a block. Every time a block is placed, a unique code is generated using, for example, industry leading RSA-authentication and sent to the railway track foreman in the field. In order for that block to be removed, its unique key must be sent back to the dispatcher at the operations control or dispatch center to authorize it. By putting the power to lift a block not solely in the hands of the dispatcher in the operations control center, but also those of railway workers operating under its protection, EEPS prevents mistakes and ultimately saves lives. EEPS is offered to Railware's customers and potential customers with Dispatch X.

16. As a result of Railware's hard work and innovations, its software won the Federal Railroad Administration ("FRA") President's Award and is recommended by the FRA for use in every railroad in the country.

17. EEPS's inventor, Ross Pirtle, was awarded two U.S. patents for his inventions: The '782 patent and the '545 patent. The '545 patent has since been reissued as the '835 patent and the '115 patent. The '782 patent, the '835 patent, and the '115 each cover Railware's EEPS technology.

18. The '782 patent includes claims directed to methods and systems for railway control. For example, in claim 5, the claimed method to enhance railway control, to protect safety of railway workers on or near railway tracks comprises (1) configuring a mobile user device of a railway field worker to provide a device user interface to display information received via a network from a railway control apparatus and to permit the railway field worker to respond to prompts displayed thereon; (2) providing a terminal user interface on a terminal to permit a terminal user to request the railway control apparatus to place a block on one or more specified track sections to permit a railway field worker to enter the track sections while blocking railway traffic to said track sections; (3) generating by the railway control apparatus a

release code and transmitting the release code to an electronic contact address accessible by the railway field worker via operation of the user interface of the user terminal; and (4) permitting the block to said one or more track sections to be removed by the railway control apparatus only upon receiving the release code from the user terminal in return.

19. The ’835 patent includes claims directed to methods and systems for centralized railway control. For example, in claim 19, the claimed method for controlling railway access using a railway traffic control apparatus of a centralized railway control system configured for centralized control of traffic of a centrally controllable railway network including plural railways and a plurality of railway traffic interlocks dispersed in said plural railways constituting said railway network comprises (1) providing a user interface of the railway traffic control apparatus, including a block placing part to place a block on one or more specified track sections in any of said plural railways constituting said railway network that is managed by centralized control operation from the railway traffic control apparatus, the railway traffic control apparatus controlling, by said centralized control operation, one or more interlocks amongst the plurality of railway traffic interlocks dispersed in said plural railways constituting said railway network, to block railway traffic to the specified track sections and thereby to permit a railway field worker to enter the track sections; (2) generating a removal code, determining an electronic contact address of the railway field worker by accessing a rail personnel contact database registering, for each railway personnel, electronic contact information of the railway personnel, and transmitting the removal code to the electronic contact address of the railway field worker; and (3) permitting the block to said one or more track sections to be removed only upon entry of the removal code by said centralized control operation from the railway traffic control apparatus..

20. The ’115 patent includes claims directed to methods and systems for centralized

railway control. For example, in claim 20, the claimed railway control apparatus for centralized control of a centrally controllable railway network including plural railways and a plurality of railway interlocks dispersed in said plural railways comprises (1) a processor for controlling a plurality of track sections in the railway network, wherein each track section is associated with a corresponding interlock and is disposed in any of said plural railways of said railway network that is managed by centralized control operation from the railway control apparatus, the processor controlling, by said centralized control operation, one or more interlocks amongst the plurality of railway interlocks dispersed in said plural railways of said railway network, to block railway traffic to one or more specified track sections; and (2) a memory device storing computer-executable instructions, wherein execution of the computer-executable instructions by the processor causes the railway control apparatus to: (a) receive a selection of at least one track section amongst the plurality of track sections; (b) transmit a block signal to the corresponding interlock associated with the at least one selected track section, to place a block on the selected track section by said centralized control operation from the railway control apparatus; (c) generate a secret code associated with the at least one selected track section; and (d) transmit the secret code to a remote user terminal.

21. The inventions claimed in the Asserted Patents fundamentally altered the way that railroads approach railway worker safety. The inventions integrated a technological barrier between the train dispatcher and releasing blocks that is controlled solely by the railway workers that are working on or near tracks. The claimed inventions of the Asserted Patents converted what had previously been a single user, single device process into a multi-device process, with the goal and accomplishment of improving railway worker safety. To accomplish this goal, the Asserted Patents introduced a new architecture and algorithm for placing and releasing blocks

that was hitherto unknown. This change requires the restructuring of communications into an unconventional arrangement and introduces new communications to the technological environment never before used in railway safety technology.

B. Regulatory Requirements and Recommendations

22. On or about December 16, 1996, the Federal Railroad Administration ("FRA") promulgated 49 C.F.R. 214.319, which governs working limits on railroad tracks.

23. On or about November 25, 2014, the FRA issued Safety Advisory 2014-02 "to reemphasize the importance of clear communication and compliance with applicable rules and procedures regarding roadway worker authority limits on controlled track."[8] In Safety Advisory 2014-02, the FRA specifically stated "FRA recommends that railroads adopt one or more electronic technologies that may serve to fill the technology gap. Examples of such technology already in use include the following systems: Enhanced Employee Protection System [EEPS]. . . ."[9]

24. The FRA described one embodiment of the patented EEPS technology as follows:

> when an RWIC [roadway worker in charge] secures a track authority, he or she is provided a code via a beeper-like device that is not provided to the dispatcher issuing the authority. The system is designed so that the dispatcher cannot remove the blocking devices that are preventing the clearing of the absolute signal until the RWIC provides him or her with the issued code. Thus, the dispatcher cannot remove the associated on-track safety provided by the authority without the knowledge and agreement of the RWIC.[10]

25. On or about June 10, 2016, the FRA issued a Final Rule amending 49 C.F.R. 214.319. Specifically, 49 C.F.R. 214.319(b) provides:

> (b) Each Class I or Class II railroad or each railroad providing regularly scheduled intercity or commuter rail passenger transportation that utilizes controlled track working limits as a form of on-track safety (under §§ 214.321 through 214.323) in

[8] DOT Roadway Worker Authority Limits Rule, 79 Fed. Reg. 70268 (2014).
[9] *Id.* at 70269.
[10] *Id.*

signalized territory shall:

> (1) By July 1, 2017, evaluate its on-track safety program and identify an appropriate method(s) of providing redundant signal protections for roadway work groups who depend on a train dispatcher or control operator to provide signal protection in establishing controlled track working limits. For purposes of this section, redundant signal protections means risk mitigation measures or safety redundancies adopted to ensure the proper establishment and maintenance of signal protections for controlled track working limits until such working limits are released by the roadway worker in charge. Appropriate redundant protections could include the use of various risk mitigation measures (or a combination of risk mitigation measures) such as technology, training, supervision, or operating-based procedures; or could include use of redundant signal protection, such as shunting, designed to prevent signal system-related incursions into established controlled track working limits; and
>
> (2) By January 1, 2018, specifically identify, implement, and comply with the method(s) of providing redundant protections in its on-track safety program.

26. Amtrak is a Class 1 railroad, and therefore subject to the provisions of 49 C.F.R. 214.319(b).

27. In the FRA's Section-by-Section Analysis that accompanied the June 10, 2016 rule change, the FRA specifically referred to Safety Advisory 2014-02 and its discussion of EEPS, concluding "FRA encourages railroads to use new technologies ***such as EEPS*** as they become available to provide redundant signal protections for roadway work groups and to comply with new paragraph (b)."[11]

28. The EEPS system referred to by the FRA is covered by the Asserted Patents.

29. Amtrak has followed and continues to follow the FRA's recommendations and implemented the patented technology of the Asserted Patents into at least its control center integration systems and/or CTC systems in a manner(s) covered by the claims of the Asserted Patents. Amtrak deploys its infringing systems, including the patented technology of the

[11] DOT Roadway Worker Protection Final Rule, 81 Fed. Reg. 37839, 37861 (emphasis added).

Asserted Patents wherever it provides centralized train control systems, including in New York.

C. Amtrak's Notice of the Patents

30. Assertion of infringement of only method claims of a patent does not implicate the Patent Act's marking provision (35 U.S.C. § 287). However, to the extent the marking statute does apply, since at least October 21, 2020, Railware has included the patent numbers of the Asserted Patents (1) in the header bar of Railware's Dispatch X system; and/or (2) on Railware's freely and publicly available website.[12] Accordingly, Amtrak has had constructive notice and knowledge of the Asserted Patents since at least October 21, 2020.

D. Amtrak's Infringement with RailwayNet℠/AIM

31. Amtrak has used and/or currently uses a centralized train control system provided by Rockwell Collins, Inc., a subsidiary of Raytheon Technology that does business as "Collins Aerospace."[13]

32. In 2008, Amtrak awarded ARINC Incorporated ("ARINC") a contract to design a Centralized Electrification and Control (CETC) system for the NEC. In 2013, Rockwell Collins acquired ARINC. In 2018, United Technologies acquired Rockwell Collins. In 2020, Raytheon Technologies merged with United Technologies, and rebranded Rockwell Collins/ARINC as Collins Aerospace.

33. According to Collins Aerospace, it provides "fully integrated train control and Positive Train Control (PTC), control center integration and customer information systems, [] cybersecurity and life-cycle management" services to "Class I freight, regional, short line, inter-

---

[12] *EEPS with SURELOCK*, RAILWARE, http://railware.net/eeps.html (last visited May 3, 2022).
[13] https://www.metro-magazine.com/10028560/arinc-wins-amtrak-contract (last visited May 6, 2022).

city, commuter, subway and light rail systems across the United States and Canada."[14]

34. Collins Aerospace offers a number of products and/or systems that provide, either alone or in combination with other products, infringing functionality, including, but not limited to ARINC RailwayNet^{SM}, Integrated Train Control, and/or AIM.

35. Collins Aerospace, through ARINC, has provided and currently provides centralized train control software and/or hardware to Amtrak, which Amtrak uses at least on its NEC corridor track, including at the PSCC.

36. Collins Aerospace's software and/or hardware systems used by Amtrak on its NEC corridor infringe the Asserted Patents.

37. For example, with respect to the '782 patent, Collins Aerospace's software and/or hardware systems, including those used by Amtrak on its NEC corridor, practice the claimed method for (1) configuring a mobile user device of a railway field worker to provide a device user interface to display information received via a network from a railway control apparatus and to permit the railway field worker to respond to prompts displayed thereon; (2) providing a terminal user interface on a terminal to permit a terminal user of the terminal to request the railway control apparatus to place a block on one or more specified track sections to permit a railway field worker to enter the track sections while blocking railway traffic to said track sections; (3) generating by the railway control apparatus a release code and transmitting the release code to an electronic contact address accessible by the railway field worker via operation of the user interface of the user terminal; and (4) permitting the block to said one or more track sections to be removed by the railway control apparatus only upon receiving the release code

[14] *Rail*, COLLINS AEROSPACE, https://www.collinsaerospace.com/what-we-do/Other-Industries/Rail (last visited Feb. 21, 2021).

from the user terminal in return, such that they infringe one or more claims of the ’782 patent.

38. As a further example, with respect to the ’835 patent, Collins Aerospace’s software and/or hardware systems, including those used by Amtrak on its NEC corridor, practice the claimed method for controlling railway access using a railway traffic control apparatus of a centralized railway control system configured for centralized control of traffic of a centrally controllable railway network including plural railways and a plurality of railway traffic interlocks dispersed in said plural railways constituting said railway network centralized railway control system including (1) providing a user interface of the railway traffic control apparatus, including a block placing part to place a block on one or more specified track sections in any of said plural railways constituting said railway network that is managed by centralized control operation from the railway traffic control apparatus, the railway traffic control apparatus controlling, by said centralized control operation, one or more interlocks amongst the plurality of railway traffic interlocks dispersed in said plural railways constituting said railway network, to block railway traffic to the specified track sections and thereby to permit a railway field worker to enter the track; (2) generating a removal code, determining an electronic contact address of the railway field worker by accessing a rail personnel contact database registering, for each railway personnel, electronic contact information of the railway personnel, and transmitting the removal code to the electronic contact address of the railway field worker; and (3) permitting the block to said one or more track sections to be removed only upon entry of the removal code by said centralized control operation from the railway traffic control apparatus, such that they infringe one or more claims of the ’835 patent.

39. As a further example, with respect to the ’115 patent, Collins Aerospace’s software and/or hardware systems, including those used by Amtrak on its NEC corridor, practice

the claimed railway control apparatus for centralized control of a centrally controllable railway network including plural railways and a plurality of railway interlocks dispersed in said plural railways comprises (1) a processor for controlling a plurality of track sections in the railway network, wherein each track section is associated with a corresponding interlock and is disposed in any of said plural railways of said railway network that is managed by centralized control operation from the railway control apparatus, the processor controlling, by said centralized control operation, one or more interlocks amongst the plurality of railway interlocks dispersed in said plural railways of said railway network, to block railway traffic to one or more specified track sections; and (2) a memory device storing computer-executable instructions, wherein execution of the computer-executable instructions by the processor causes the railway control apparatus to: (a) receive a selection of at least one track section amongst the plurality of track sections; (b) transmit a block signal to the corresponding interlock associated with the at least one selected track section, to place a block on the selected track section by said centralized control operation from the railway control apparatus; (c) generate a secret code associated with the at least one selected track section; and (d) transmit the secret code to a remote user terminal, such that they infringe one or more claims of the ’115 patent.

40. On or about September 6, 2017, Collins Aerospace released a press release stating that Amtrak has signed a nationwide contract for Collins Aerospace’s ARINC RailwayNet^{SM} Positive Train Control service. According to press release: “ARINC RailwayNet is a hosted network, messaging and application platform. . . . RailwayNet helps facilitate the increases in safety and reliability that PTC provides. RailwayNet will be implemented nationwide on Amtrak

routes."[15]

41. According to Amtrak's Northeast Corridor Annual Report for fiscal year 2017, Amtrak allocated more than $420,000 in implementing the Enhanced Employee Protection System (EEPS) in the Northeast Corridor through Collins Aerospace.[16]

C.EN.101711	FEN AMTRAK NEC - FENCE UPGRADES	3,082,806	1,446,696		
C.EN.101713	RAIL AMTRAK NEC - INSULATED JOINT REPLACEMENT PROGRAM	2,577,715	1,168,866	38,720	
C.EN.101714	CETC AMTRAK SYSTEM-MOFW ENHANCED EMPLOYEE PROTECTION SYSTEM	421,503	409,692		
C.EN.101732	RAD AMTRAK NEC - RADIO SYSTEM UPGRADES	-	-		
C.EN.101737	STA PENN STATION NY - STATION CHILLED WATER SYSTEM UPGRADE	-	-		
C.EN.201034	ACSE AMTRAK OWNED-POSITIVE TRAIN CONTROL PTC INSTALLATION	3,150,755	3,023,578		
C.EN.201264	POLE ZOO TO PAOLI - CATENARY STRUCTURE REPLACEMENT DESIGN	71,846	12,551		
C.TR.100074	STA NEW ENGLAND DIV - INSTALL TRAIN APPROACH MESSAGE SYS	286,337	133,789	152,547	

Northeast Corridor Commission | 49

42. Amtrak budgeted $2,405,319 as Northeast Corridor (NEC)-wide expenditure for "implement[ing] the SEPTA [Southeastern Pennsylvania Transportation Authority] and Metro North Enhanced Employee Protection System (EEPS) into the Amtrak CETC [Centralized

[15] *Amtrak Signs Nationwide Contract for Rockwell Collins' ARINC RailwayNet*^{SM} *Positive Train Control Service*, Mass Transit Magazine (Sep. 6, 2017), https://www.masstransitmag.com/rail/railroad-signals-ptc-control-systems-and-products/press-release/12365875/rockwell-collins-amtrak-signs-nationwide-contract-for-rockwell-collins-arinc-railwaynetsm-positive-train-control-service.

[16] *Northeast Corridor Annual Report: Operations and Infrastructure*, NEC COMMISSION 1, 49 (April 2018), https://nec-commission.com/app/uploads/2018/04/NEC-Annual-Report-FY17.pdf.

Electrification and Traffic Control] systems on the NEC" in October 2017 for the fiscal year 2018.[17]

C.EN.101714. CETC Amtrak System - MOFW Enhanced Employee Protection System (Segment 31). CETC - Enhanced Employee Protection System. This project will implement the SEPTA and Metro North Enhanced Employee Protection System (EEPS) into the Amtrak CETC systems on the NEC.	$2,405,319

43. As discussed above, the Metro North EEPS system is covered by one or more claims of the Asserted Patents, and Metro North is a customer of Railware.

E. Amtrak's Infringement with AMTEC System

44. Amtrak recently announced the decision to replace the legacy Collins Aerospace dispatch system with its own, proprietary dispatch system, known as AMTEC. Amtrak has either already implemented the AMTEC system or is in the process of implementing the AMTEC system, including at PSCC. AMTEC stands for Amtrak Train and Electrification Control. AMTEC is Amtrak's proprietary train dispatch system that implements Amtrak's CETC (Centralized Electrification and Train Control) system. Amtrak uses the AMTEC train dispatching system to improve central train control functionality across Amtrak's tracks, including at PSCC.[18]

45. In February 2019, Amtrak's Five-Year Infrastructure Asset Line Plan for FY 2019-2024 allocated $3,650,000 for FY 2019 and $5,194,913 for FY 2020 to convert the ARINC system to the AMTEC system and replace the Mid-Atlantic Division ("MAD") and Northeast Division ("NED") CETC primary and backup system with the AMTEC system in the

---

[17] *Northeast Corridor One-Year Implementation Plan*, NEC COMMISSION 1, 16 (Oct. 2017), http://nec-commission.com/app/uploads/2018/03/NEC-One-Year-Implementation-Plan-FY18.pdf.

[18] *See Management Trainee Program*, AMTRAK CAREERS, https://careers.amtrak.com/content/Management-Trainee-Program/?locale=en_US (last visited April 7, 2022).

Washington to Boston line.[19]

C.EN.101767 - WAS-BOS CETC ARINC TO AMTEC SOFTWARE	FAST Act Category:	Construction Program Priority:
The Washington to Boston ARINC to AMTEC Software Upgrade Project will replace the MAD and NED CETC primary and backup system with the AMTEC system. The project will be design, implement and test the new MAD and NED AMTEC systems by in-house PSCC staff as well as maintenance of all system interfaces. Transportation personnel in Wilmington, Boston and Remote locations will be able to transfer their operations to the new system. Power Director and Load Dispatcher operations will continue, either by a newly selected system by Electric Traction (E/T) personnel or by the existing system. The project will provide training on the new system to both Transportation and CETC specialists. Location: NEC wide.	- Improvements Also Supports: - Normalized Capital Replacement - Strategic Initiatives that improve operational performance, lower cost or improve efficiency - Statutory, regulatory, or other legal mandates	N/A Project Benefits: - Safety - SOGR - Resilience

FY2019	FY2020	FY2021	FY2022	FY2023	FY2024	C.EN.101767 Total
$3,650,000	$5,194,913	$0	$0	$0	$0	$8,844,193

46. Six months earlier, in October 2018, Amtrak had estimated a total project cost of $6,593,463—with a fiscal year 2019 planned expenditure of $6,212,732—to convert the ARINC system to AMTEC Software and replace the MAD and NED CETC primary and backup system with the AMTEC system in the Washington to Boston line.[20]

Washington to Boston ARINC to AMTEC Software Upgrade Project. CETC WASHINGTON TO BOSTON. C.EN.101767. FY19 scope includes completion of installation and testing of all software and hardware on the MAD-Harrisburg line and MAD-Mid-Atlantic Divisions. The project anticipates installation and testing on the NED-Springfield Line in FY19. The remaining work that is needed NED-Mainline will be start and complete in Early FY20.		$6,593,463	$6,212,732
FY19 Phases	Schedule		
MAD-Harrisburg line Phase 1	10/01/18 - 02/28/19		
MAD- Mid-Atlantic Phase 2	01/01/19 - 05/20/19		
NED-Springfield line Phase 3	06/01/19 - 10/01/19		
For project details, see Appendix A.			

[19] *Amtrak Five Year Infrastructure Asset Line Plan FY 2019-2024*, AMTRAK 1, 320, https://www.amtrak.com/content/dam/projects/dotcom/english/public/documents/corporate/businessplanning/Amtrak-Infrastructure-Asset-Line-Plan-FY20-24.pdf (last visited April 7, 2022).
[20] *Northeast Corridor One-Year Implementation Plan Fiscal Year 2019*, NEC COMMISSION 1, 108 (Oct. 2018), https://nec-commission.com/app/uploads/2018/10/NEC-One-Year-Plan-FY19.pdf.

47. Amtrak has stated that the AMTEC system "will provide a common dispatch platform for the NEC."[21]

48. In early 2021, as part of Amtrak's new train control systems, Amtrak announced the "initiative to standardize dispatch systems on the Amtrak-developed AMTEC platform to replace the legacy Collins dispatch system [that] will provide a common dispatch platform for the NEC and the Central division that is more reliable and resilient and will reduce maintenance cost."[22]

49. According to Amtrak's 2019 FY plan, it has implemented or is in the process of implementing an enhanced employee protection system (EEPS) that operates by "provid[ing] roadway workers with an authorization code that corresponds to the blocking protection applied in the CETC control system. Removal of the protection by the CETC train dispatcher will require the authorization code to be provided by the roadway worker."[23]

---

[21] https://www.amtrak.com/content/dam/projects/dotcom/english/public/documents/corporate/businessplanning/Amtrak-Service-Asset-Line-Plans-FY22-27.pdf (last visited May 6, 2022).

[22] *Five-Year Plans | Service And Asset Line Plans | FY 2021-2026*, AMTRAK 1, 149, https://www.amtrak.com/content/dam/projects/dotcom/english/public/documents/corporate/businessplanning/Amtrak-Service-Line-Asset-Line-Plans-FY21-26.pdf (last visited April 7, 2022).

[23] *Northeast Corridor One-Year Implementation Plan Fiscal Year 2019*, NEC COMMISSION 1, 233 (Oct. 2018), https://nec-commission.com/app/uploads/2018/10/NEC-One-Year-Plan-FY19.pdf.

All Other Amtrak Programs/Projects – Scopes	FY19 Proposed Budget
C.EN.101714. CETC AMTRAK SYSTEM-MOFW ENHANCED EMPLOYEE PROTECTION SYSTEM. Implement a system to enhance roadway worker protection when working on track under foul time or track out of service. The system will provide roadway workers with an authorization code that corresponds to the blocking protection applied in the CETC control system. Removal of the protection by the CETC train dispatcher will require the authorization code be provided by the roadway worker. The system will utilize modifications to the CETC System platform functionality and mobile devices assigned to roadway workers. Deliverables: • EEPS operating practices documentation; • Modification to each CETC System to provide EEPS functionality: - Wilmington CETC (Mid-Atlantic Division) - Boston CETC (NH to Boston, Springfield Line and MBTA Lines) - NY CETC West - PSCC - CETC Hudson-Albany Line • EEPS mobile devices for roadway workers; • Training program for roadway workers and dispatchers; • Operations management plans and procedures to be used after system acceptance;	$224,007

50. The EEPS system described in Amtrak's 2019 FY plan has been or will be implemented as part of the AMTEC system upgrade.

FIRST CLAIM FOR RELIEF

(Infringement of the '782 patent)

51. Railware repeats and incorporates by reference all prior allegations of this Complaint as if fully set forth herein.

52. Railware is the owner by assignment of all rights, title, and interest in and to the '782 patent.

53. The '782 patent is valid and enforceable.

54. Claim 5 of the '782 patent recites:

> A method to enhance railway control, to protect safety of railway workers on or near railway tracks, said method comprising:
>
> > configuring a mobile user device of a railway field worker to provide a device user interface to display information received via a network from a railway control apparatus and to permit the railway field worker to respond to prompts displayed thereon;
> >
> > providing a terminal user interface on a terminal to permit a terminal user of the terminal request the railway control apparatus to place a block on one or more specified track sections to permit a railway field worker to enter the track sections while blocking railway traffic to said track sections;

> generating by the railway control apparatus a release code and transmitting the release code to an electronic contact address accessible by the railway field worker via operation of the user interface of the user terminal; and
>
> permitting the block to said one or more track sections to be removed by the railway control apparatus only upon receiving the release code from the user terminal in return.

A. Infringement Based on Amtrak's Implementation of Collins Aerospace's ARINC RailwayNet^{SM} System/AIM System

55. In violation of 35 U.S.C. § 271(a), Amtrak has infringed and continues to infringe one or more claims of the '782 patent by making, using, offering for sale, selling, and/or importing in or into the United States a system or method covered by the '782 patent, including, but not limited to, at least Amtrak's implementation of Collins Aerospace's ARINC RailwayNet^{SM} system/AIM system and/or other similar system.[24]

56. Amtrak, through its implementation of Collins Aerospace's ARINC RailwayNet^{SM} system and AIM system and/or other similar system, infringes at least claim 5 of the '782 patent.

57. Amtrak's implementation of Collins Aerospace's ARINC RailwayNet^{SM} system/AIM system and/or other similar system practices a "method to enhance railway control, to protect safety of railway workers on or near railway tracks."

58. Amtrak owns and/or operates a number of dispatch centers along the Northeast Corridor (NEC) spine including in Boston, MA, New York, NY (PSCC), and Philadelphia, PA.[25] Dispatching centers are centralized railway control systems for controlling trains on certain

---

[24] Further investigation may reveal that others of Amtrak's products and systems also directly or indirectly infringe at least claim 5 or other claims of the '782 patent.

[25] *See CETC Dispatch*, RAILROAD.NET, https://railroad.net/cetc-dispatch-t66499-15.html (last visited Apr. 04, 2022); s*ee also Supra* ¶¶ 22–29.

sections of track. Amtrak implemented the Collins Aerospace-developed RailwayNet^{SM} as a SaaS and/or IaaS—a software/infrastructure as a service—product that provides "full-featured network management and infrastructure, hardware, network, operating systems, and applications for fault, performance, security and configuration management."[26] Amtrak has further implemented Collins Aerospace-developed AIM software.

59. According to Collins Aerospace, RailwayNet^{SM} helps facilitate the increases in safety and reliability that PTC provides.[27]

60. Collins Aerospace advertises that RailwayNet^{SM}, which Amtrak uses, improves rail safety. "This system refers to communication-based/processor-based train control technology designed to address a number of rail safety issues, including train-to-train collisions, over-speed derailments, incursions into established work-zone limits, and train movement through a main-line switch that is in an improper position."[28]

---

[26] ROCKWELL COLLINS INC., ARINC RAILWAYNET WHITE PAPER 6 (2016), https://www.rockwellcollins.com/-/media/Files/Unsecure/Services-And-Support/Information-Management/ARINC-Rail/RailwayNet/ARINC-Rail_RailwayNet_white-paper.ashx [hereinafter referred to as "White Paper"]; *see also Supra* ¶¶ 33–41.

[27] *Amtrak signs nationwide contract for Rockwell Collins' ARINC RailwayNet^{SM} Positive Train Control service*, COLLINS AEROSPACE (Sep. 6, 2017), https://www.collinsaerospace.com/-/media/project/collinsaerospace/collinsaerospace-website/product-assets/files/public/services-and-support/information-management/arinc-rail/amtrak-and-railwaynet-press-release.pdf.

[28] White Paper at 3.

61. Because Amtrak's implementation of Collins Aerospace's ARINC RailwayNet℠ increases rail safety through a "communication-based/processor-based train control technology," Amtrak practices a "method to enhance railway control, to protect safety of railway workers on or near railway tracks."

62. Amtrak's implementation of Collins Aerospace's ARINC RailwayNet℠ system/AIM system and/or other similar system or method further configures "a mobile user device of a railway field worker to provide a device user interface to display information received via a network from a railway control apparatus and to permit the railway field worker to respond to prompts displayed thereon."

63. Amtrak budgeted $224,007 as FY19 Proposed Budget for implementing an "enhanced employee protection system."

All Other Amtrak Programs/Projects – Scopes	FY19 Proposed Budget
C.EN.101714. CETC AMTRAK SYSTEM-MOFW ENHANCED EMPLOYEE PROTECTION SYSTEM. Implement a system to enhance roadway worker protection when working on track under foul time or track out of service. The system will provide roadway workers with an authorization code that corresponds to the blocking protection applied in the CETC control system. Removal of the protection by the CETC train dispatcher will require the authorization code be provided by the roadway worker. The system will utilize modifications to the CETC System platform functionality and mobile devices assigned to roadway workers. Deliverables: • EEPS operating practices documentation; • Modification to each CETC System to provide EEPS functionality: - Wilmington CETC (Mid-Atlantic Division) - Boston CETC (NH to Boston, Springfield Line and MBTA Lines) - NY CETC West - PSCC - CETC Hudson-Albany Line • EEPS mobile devices for roadway workers; • Training program for roadway workers and dispatchers; • Operations management plans and procedures to be used after system acceptance;	$224,007

64. This system includes providing "mobile devices for roadway workers" as a part of its deliverables. It is common knowledge that mobile devices include a user interface for interaction by a user. According to Amtrak, the system, i.e., a railway control apparatus, provides an authorization code to the railway worker's mobile device. Such communication must happen over a network. Further, the roadway worker must be able to respond to prompts displayed on the mobile device in order to provide the CETC train dispatcher with the authorization code. As noted in the image below, Amtrak's implementation of Collins Aerospace's ARINC RailwayNet^{SM}/AIM system and/or other similar system or method "require[s] the authorization code be provided by the roadway worker."

All Other Amtrak Programs/Projects – Scopes	FY19 Proposed Budget
C.EN.101714. CETC AMTRAK SYSTEM-MOFW ENHANCED EMPLOYEE PROTECTION SYSTEM. Implement a system to enhance roadway worker protection when working on track under foul time or track out of service. The system will provide roadway workers with an authorization code that corresponds to the blocking protection applied in the CETC control system. Removal of the protection by the CETC train dispatcher will require the authorization code be provided by the roadway worker. The system will utilize modifications to the CETC System platform functionality and mobile devices assigned to roadway workers. Deliverables: • EEPS operating practices documentation; • Modification to each CETC System to provide EEPS functionality: - Wilmington CETC (Mid-Atlantic Division) - Boston CETC (NH to Boston, Springfield Line and MBTA Lines) - NY CETC West - PSCC - CETC Hudson-Albany Line • EEPS mobile devices for roadway workers; • Training program for roadway workers and dispatchers; • Operations management plans and procedures to be used after system acceptance;	$224,007

65. Amtrak, for its implementation of Collins Aerospace's ARINC RailwayNet[SM]/AIM system, has purchased mobile devices for its railway workers and implemented a system whereby its CETC system permits users to respond to prompts over a network.[29]

All Other Amtrak Programs/Projects – Scopes	FY19 Proposed Budget
C.EN.101714. CETC AMTRAK SYSTEM-MOFW ENHANCED EMPLOYEE PROTECTION SYSTEM. Implement a system to enhance roadway worker protection when working on track under foul time or track out of service. The system will provide roadway workers with an authorization code that corresponds to the blocking protection applied in the CETC control system. Removal of the protection by the CETC train dispatcher will require the authorization code be provided by the roadway worker. The system will utilize modifications to the CETC System platform functionality and mobile devices assigned to roadway workers. Deliverables: • EEPS operating practices documentation; • Modification to each CETC System to provide EEPS functionality: - Wilmington CETC (Mid-Atlantic Division) - Boston CETC (NH to Boston, Springfield Line and MBTA Lines) - NY CETC West - PSCC - CETC Hudson-Albany Line • EEPS mobile devices for roadway workers; • Training program for roadway workers and dispatchers; • Operations management plans and procedures to be used after system acceptance;	$224,007

66. According to Amtrak's Northeast Corridor Annual Report for fiscal year 2017, Amtrak allocated more than $420,000 in implementing the Enhanced Employee Protection System (EEPS) in the Northeast Corridor through its implementation of Collins Aerospace's ARINC RailwayNet[SM].[30] It also specifies providing back-office infrastructure and messaging, including "[s]torage and delivery of crew and consist information, train IDs and clearances."[31]

---

[29] *Northeast Corridor One-Year Implementation Plan Fiscal Year 2019*, NEC COMMISSION 1, 233 (Oct. 2018), https://nec-commission.com/app/uploads/2018/10/NEC-One-Year-Plan-FY19.pdf [hereinafter referred to as "*NEC One-Year Plan 2019*"].
[30] *Northeast Corridor Annual Report: Operations and Infrastructure*, NEC COMMISSION 1, 49 (April 2018), https://nec-commission.com/app/uploads/2018/04/NEC-Annual-Report-FY17.pdf.
[31] White Paper at 7.

C.EN.101711	FEN AMTRAK NEC - FENCE UPGRADES	3,082,806	1,446,696		
C.EN.101713	RAIL AMTRAK NEC - INSULATED JOINT REPLACEMENT PROGRAM	2,577,715	1,168,866	38,720	
C.EN.101714	CETC AMTRAK SYSTEM-MOFW ENHANCED EMPLOYEE PROTECTION SYSTEM	421,503	409,692		
C.EN.101732	RAD AMTRAK NEC - RADIO SYSTEM UPGRADES	-	-		
C.EN.101737	STA PENN STATION NY - STATION CHILLED WATER SYSTEM UPGRADE	-	-		
C.EN.201034	ACSE AMTRAK OWNED-POSITIVE TRAIN CONTROL PTC INSTALLATION	3,150,755	3,023,578		
C.EN.201264	POLE ZOO TO PAOLI - CATENARY STRUCTURE REPLACEMENT DESIGN	71,846	12,551		
C.TR.100074	STA NEW ENGLAND DIV - INSTALL TRAIN APPROACH MESSAGE SYS	286,337	133,789	152,547	

67. According to Collins Aerospace, its RailwayNet^{SM} system supports I-ETMS message flows, including communications with railway workers to communicate crew verification and mandatory directives.

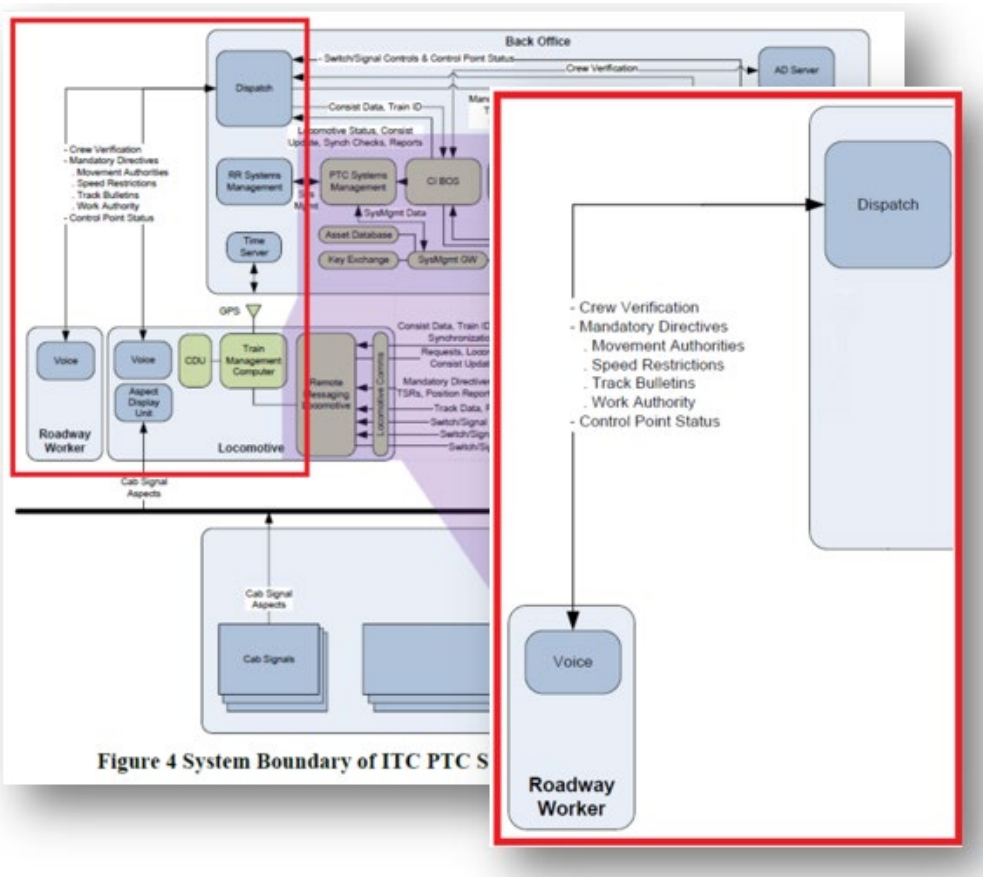

68. Accordingly, Amtrak's implementation of Collins Aerospace's ARINC RailwayNet^{SM} and/or other similar system or method, by providing a technology infrastructure to send and receive messages via a network and by providing mobile devices to rail workers, practices a method that configures "a mobile user device of a railway field worker to provide a device user interface to display information received via a network from a railway control apparatus and to permit the railway field worker to respond to prompts displayed thereon."

69. Amtrak's implementation of Collins Aerospace's ARINC RailwayNet^{SM} system/AIM system and/or other similar system or method further provides "a terminal user interface on a terminal to permit a terminal user of the terminal request the railway control apparatus to place a block on one or more specified track sections to permit a railway field worker to enter the track sections while blocking railway traffic to said track sections."

70. The "ARINC RailwayNet^{SM} integrations server and software provides connectivity between the railroad IT systems and the hosted back-office components."[32] The integration server provides a terminal user interface on a terminal for use by the CETC system dispatcher.

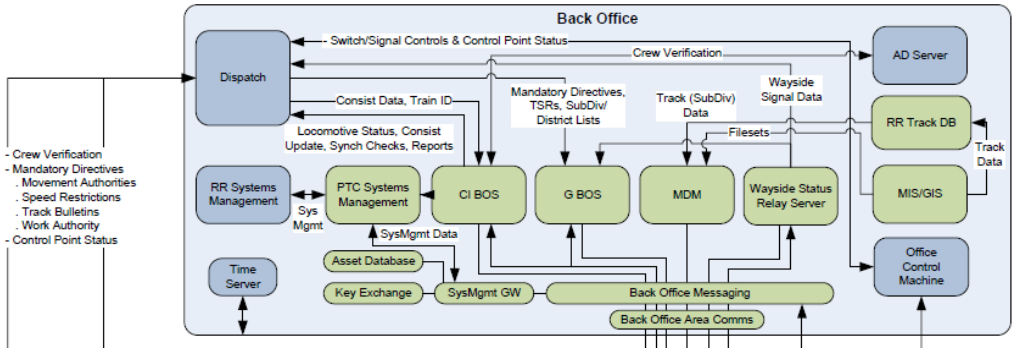

[32] *See* White Paper at 8 (illustrating "AIM® integration server").

AIM® integration server

The ARINC RailwayNet integrations server and software provides connectivity between the railroad IT systems and the hosted back-office components. The functions of this application include:

- Interface with customer's IT gateway
- Interface with back office
- Manage crew authentication through the customer's IT gateway
- Functions to assign train ID to trains based on the clearance number
- Functions to manage train consist through the customer's IT gateway
- Functions to track, display, and store events and alarms

Centralized Traffic Control and SCADA

Collins designs and integrates state-of-the-art rail control solutions using our ARINC Advanced Information Management (AIM®) platform. AIM serves as an end-to-end solution for all rail control requirements, including SCADA, Centralized Traffic Control, Positive Train Control (PTC) and control center integration. Highly flexible and feature-rich, AIM enables railroads to maximize operational efficiency, cost-effectiveness and safety, all while providing an environment protected by the latest tools and techniques in cybersecurity.

KEY AREAS OF EXPERTISE

- Train monitoring and control
- Automatic train tracking
- Automatic route setting/ automatic routing
- Automatic traffic regulation and schedule deviation
- Schedule management
- Integrated yard management
- Bulletins, authorities and restrictions management
- Employee in Charge (EIC) terminals
- Emergency Operating Procedures (EOP)
- Power planning
- Playback and simulation
- Data acquisition
- Interface integration

71. Collins Aerospace's ARINC RailwayNet^{SM}/AIM system, as implemented by Amtrak, provides the network connections and office applications required to exchange critical information among Class I railroads and their partner short line commuter railroads. It is available on a subscription basis as hosted SaaS (software as a service) and IaaS (infrastructure as a service) solutions and PTC messaging from the back office to the locomotive through VHF, cellular, and Wi-Fi is also available.[33]

72. Amtrak budgeted an additional $224,007 as FY19 Proposed Budget for implementing a system to enhance railway worker protection when working on track under foul time or track out of service.

[33] *New from Rockwell Collins: Shared-network PTC platform*, RAILWAY AGE 14 (July 2016), https://issuu.com/railwayage/docs/july_2016_railway_age.

All Other Amtrak Programs/Projects – Scopes	FY19 Proposed Budget
C.EN.101714. CETC AMTRAK SYSTEM-MOFW ENHANCED EMPLOYEE PROTECTION SYSTEM. Implement a system to enhance roadway worker protection when working on track under foul time or track out of service. The system will provide roadway workers with an authorization code that corresponds to the blocking protection applied in the CETC control system. Removal of the protection by the CETC train dispatcher will require the authorization code be provided by the roadway worker. The system will utilize modifications to the CETC System platform functionality and mobile devices assigned to roadway workers. Deliverables: • EEPS operating practices documentation; • Modification to each CETC System to provide EEPS functionality: - Wilmington CETC (Mid-Atlantic Division) - Boston CETC (NH to Boston, Springfield Line and MBTA Lines) - NY CETC West - PSCC - CETC Hudson-Albany Line • EEPS mobile devices for roadway workers; • Training program for roadway workers and dispatchers; • Operations management plans and procedures to be used after system acceptance;	$224,007

73. Collins Aerospace advertises that its AIM system provides "train monitoring and control," "automatic route setting/automatic routing," "automatic traffic regulation," and "bulletins, authorities, and restrictions management."[34] One or more of these functionalities encompasses the claimed limitation to "to place a block on one or more specified track sections to permit a railway field worker to enter the track sections while blocking railway traffic to said track sections."

[34] *Intelligence-Based Rail Solutions*, Collins Aerospace, https://www.collinsaerospace.com/-/media/project/collinsaerospace/collinsaerospace-website/product-assets/marketing/r/rail/arinc-rail-solutions-for-passengers.pdf?rev=e7e5ddbff2de4154ba265f03e27f14d3.

Centralized Traffic Control and SCADA

Collins designs and integrates state-of-the-art rail control solutions using our ARINC Advanced Information Management (AIM®) platform. AIM serves as an end-to-end solution for all rail control requirements, including SCADA, Centralized Traffic Control, Positive Train Control (PTC) and control center integration. Highly flexible and feature-rich, AIM enables railroads to maximize operational efficiency, cost-effectiveness and safety, all while providing an environment protected by the latest tools and techniques in cybersecurity.

KEY AREAS OF EXPERTISE

- Train monitoring and control
- Automatic train tracking
- Automatic route setting/ automatic routing
- Automatic traffic regulation and schedule deviation
- Schedule management
- Integrated yard management
- Bulletins, authorities and restrictions management
- Employee in Charge (EIC) terminals
- Emergency Operating Procedures (EOP)
- Power planning
- Playback and simulation
- Data acquisition
- Interface integration

74. Amtrak budgeted $224,007 as FY19 Proposed Budget for implementing an "enhanced employee protection system."

All Other Amtrak Programs/Projects – Scopes	FY19 Proposed Budget
C.EN.101714. CETC AMTRAK SYSTEM-MOFW ENHANCED EMPLOYEE PROTECTION SYSTEM. Implement a system to enhance roadway worker protection when working on track under foul time or track out of service. The system will provide roadway workers with an authorization code that corresponds to the blocking protection applied in the CETC control system. Removal of the protection by the CETC train dispatcher will require the authorization code be provided by the roadway worker. The system will utilize modifications to the CETC System platform functionality and mobile devices assigned to roadway workers. Deliverables: • EEPS operating practices documentation; • Modification to each CETC System to provide EEPS functionality: - Wilmington CETC (Mid-Atlantic Division) - Boston CETC (NH to Boston, Springfield Line and MBTA Lines) - NY CETC West - PSCC - CETC Hudson-Albany Line • EEPS mobile devices for roadway workers; • Training program for roadway workers and dispatchers; • Operations management plans and procedures to be used after system acceptance;	$224,007

75. Collins Aerospace's ARINC RailwayNet^{SM}/AIM system and/or other similar system or method, implemented by Amtrak, that places track sections in "foul time" necessarily "permit a terminal user of the terminal request the railway control apparatus to place a block on

one or more specified track sections to permit a railway field worker to enter the track sections while blocking railway traffic to said track sections" as recited in this claim element. Specifically, FRA regulations 49 C.F.R. § 214.323 defines "foul time" as "a method of establishing working limits on controlled track in which a roadway worker is notified by the train dispatcher or control operator that *no trains will operate within a specific segment of controlled track until the roadway worker reports clear of the track*." Because Amtrak, through its implementation of ARINC RailwayNet^{SM}/AIM system and/or other similar system or method, has the ability to place tracks in foul time, it practices the claimed method "to place a block on one or more specified track sections to permit a railway field worker to enter the track sections while blocking railway traffic to said track sections."

76. In order to comply with and implement FRA's regulations (communication-based/processor-based train control technology designed to address a number of railway safety issues including train-to-train collisions, over-speed derailments, incursions into established work-zone limits, and train movement through a main-line switch that is in an improper position), RailwayNet^{SM} must be configured to place a block on one or more sections of railway track to prevent trains from traversing the one or more sections of railway track.

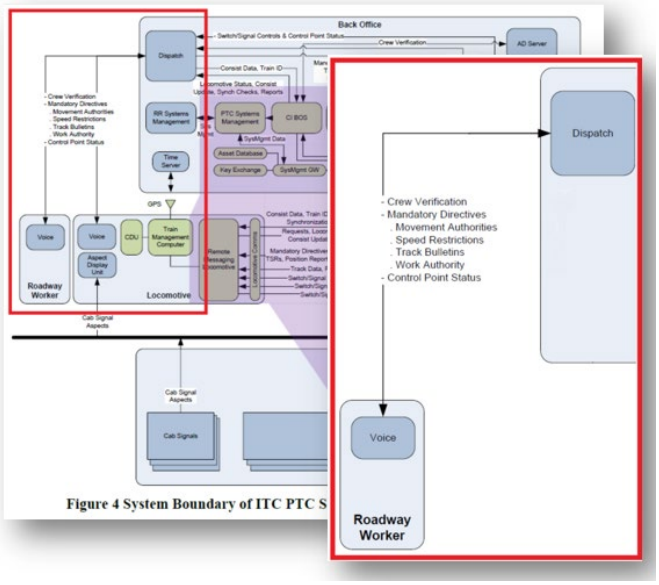

Figure 4 System Boundary of ITC PTC S

77. Accordingly, by permitting the CETC train dispatcher to place a track under foul time, Collins Aerospace's ARINC RailwayNet^{SM}/AIM system and/or other similar system or method, as implemented by Amtrak, "permit[s] a terminal user of the terminal request the railway control apparatus to place a block on one or more specified track sections to permit a railway field worker to enter the track sections while blocking railway traffic to said track sections."

78. Amtrak's implementation of Collins Aerospace's ARINC RailwayNet^{SM}/AIM system and/or other similar system or method further generates "by the railway control apparatus a release code and transmit[s] the release code to an electronic contact address accessible by the railway field worker via operation of the user interface of the user terminal."

79. According to Amtrak's 2019 FY plan, it has implemented or is in the process of implementing an enhanced employee protection system (EEPS) that operates by "provid[ing] roadway workers with an authorization code that corresponds to the blocking protection applied in the CETC control system. Removal of the protection by the CETC train dispatcher will require

the authorization code to be provided by the roadway worker."[35]

80. In a report authored by Collins Aerospace and submitted to the U.S. Department of Transportation, Collins Aerospace illustrates the claimed railway control apparatus as the "back office" in the below diagram.

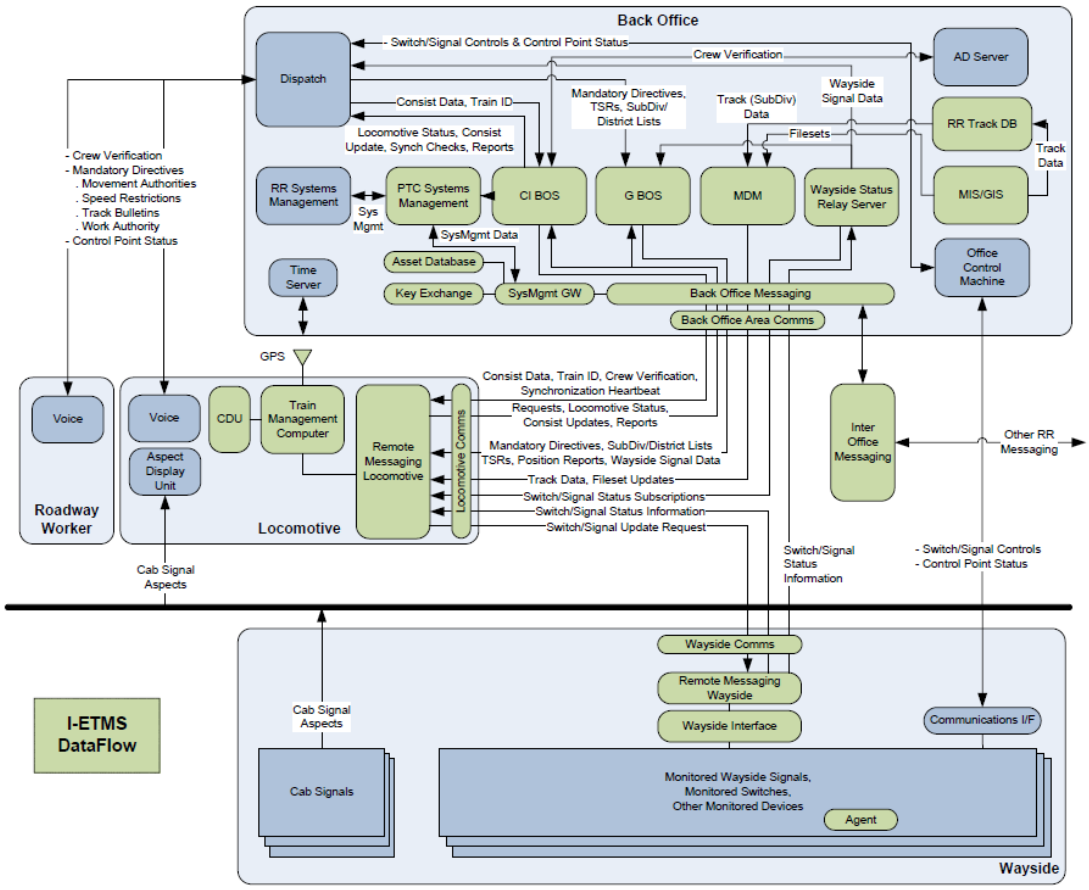

Figure 2 I-ETMS PTC Message Flows

81. Amtrak budgeted $224,007 as FY19 Proposed Budget for implementing an "enhanced employee protection system" that will "provide roadway workers with an authorization code that corresponds to the blocking protection applied in the CETC control

[35] *Northeast Corridor One-Year Implementation Plan Fiscal Year 2019*, NEC COMMISSION 1, 233 (Oct. 2018), https://nec-commission.com/app/uploads/2018/10/NEC-One-Year-Plan-FY19.pdf.

system."[36]

All Other Amtrak Programs/Projects – Scopes	FY19 Proposed Budget
C.EN.101714. CETC AMTRAK SYSTEM-MOFW ENHANCED EMPLOYEE PROTECTION SYSTEM. Implement a system to enhance roadway worker protection when working on track under foul time or track out of service. The system will provide roadway workers with an authorization code that corresponds to the blocking protection applied in the CETC control system. Removal of the protection by the CETC train dispatcher will require the authorization code be provided by the roadway worker. The system will utilize modifications to the CETC System platform functionality and mobile devices assigned to roadway workers. Deliverables: • EEPS operating practices documentation; • Modification to each CETC System to provide EEPS functionality: - Wilmington CETC (Mid-Atlantic Division) - Boston CETC (NH to Boston, Springfield Line and MBTA Lines) - NY CETC West - PSCC - CETC Hudson-Albany Line • EEPS mobile devices for roadway workers; • Training program for roadway workers and dispatchers; • Operations management plans and procedures to be used after system acceptance;	$224,007

82. The system provides, i.e., transmits to, railway workers with an authorization code that corresponds to the blocking protection applied in the CETC control system. Removal of the protection by the CETC train dispatcher requires that the authorization code be provided by the railway worker. The system will utilize modifications to the CETC System platform functionality and mobile devices assigned to railway workers. The deliverable included modification to each CETC System to provide EEPS functionality in at least Wilmington CETC (Mid-Atlantic Division); Boston CETC (NH to Boston, Springfield Line and MBTA Lines); NY CETC West; PSCC (Pennsylvania Station Central Control); and CETC Hudson-Albany Line**.** The deliverables also included EEPS mobile devices for railway workers; EEPS operating practices documentation; training program for railway workers and dispatchers; and operations management plans and procedures to be used after system acceptance.[37]

---

[36] *Northeast Corridor One-Year Implementation Plan Fiscal Year 2019*, NEC COMMISSION 1, 233 (Oct. 2018), https://nec-commission.com/app/uploads/2018/10/NEC-One-Year-Plan-FY19.pdf.

[37] *Northeast Corridor One-Year Implementation Plan Fiscal Year 2019*, NEC COMMISSION 1, 233 (Oct. 2018), https://nec-commission.com/app/uploads/2018/10/NEC-One-Year-Plan-FY19.pdf.

83. Collins Aerospace provides that the ARINC RailwayNet^{SM} system implemented by Amtrak specifies providing back office infrastructure and messaging, including "[s]torage and delivery of crew and consist information, train IDs and clearances" as part of its RailwayNet^{SM} product.[38] It further specifies enabling compliance with I-ETMS systems.[39] Because I-ETMS systems require communication of crew verification and employee authentication, Amtrak maintains electronic contact addresses of the railway field workers from a rail personnel contact database. RailwayNet^{SM} messaging functions also include: "[k]ey exchange server," described as "[s]ecurity keys with data store."[40]

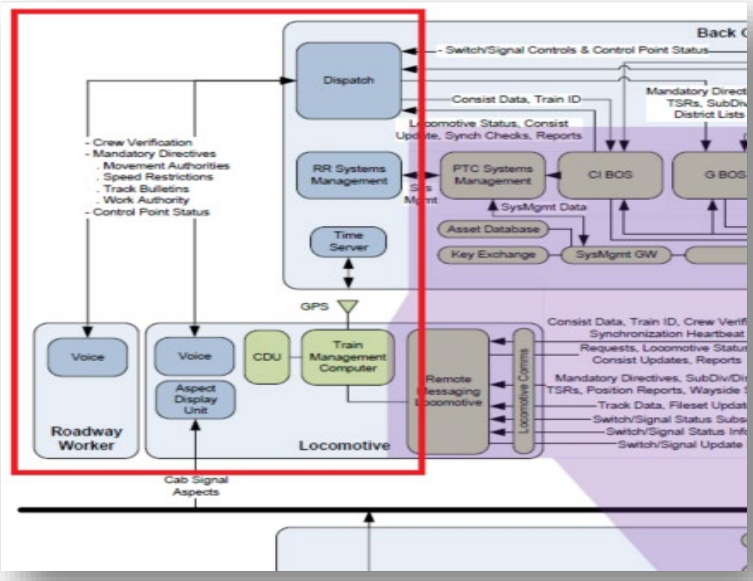

84. Accordingly, since Amtrak's implementation of Collins Aerospace's ARINC RailwayNet^{SM}/AIM system and/or other similar system or method provides "roadway workers with an authorization code that corresponds to the blocking protection applied in the CETC

[38] *See* White Paper at 7.
[39] *See* Report at 43.
[40] White Paper at 7.

control system,"[41] Amtrak practices the method of "generating by the railway control apparatus a release code and transmitting the release code to an electronic contact address accessible by the railway field worker via operation of the user interface of the user terminal."

85. Amtrak's implementation of Collins Aerospace's ARINC RailwayNet^{SM}/AIM system and/or other similar system or method permits "the block to said one or more track sections to be removed by the railway control apparatus only upon receiving the release code from the user terminal in return."

86. Amtrak has indicated that it has implemented or is implementing an enhanced employee protection system (EEPS) that requires the dispatcher to enter the "authorization code" in order to remove the protection (i.e., the foul time) from the track.[42]

All Other Amtrak Programs/Projects – Scopes	FY19 Proposed Budget
C.EN.101714. CETC AMTRAK SYSTEM-MOFW ENHANCED EMPLOYEE PROTECTION SYSTEM. Implement a system to enhance roadway worker protection when working on track under foul time or track out of service. The system will provide roadway workers with an authorization code that corresponds to the blocking protection applied in the CETC control system. Removal of the protection by the CETC train dispatcher will require the authorization code be provided by the roadway worker. The system will utilize modifications to the CETC System platform functionality and mobile devices assigned to roadway workers. Deliverables: • EEPS operating practices documentation; • Modification to each CETC System to provide EEPS functionality: - Wilmington CETC (Mid-Atlantic Division) - Boston CETC (NH to Boston, Springfield Line and MBTA Lines) - NY CETC West - PSCC - CETC Hudson-Albany Line • EEPS mobile devices for roadway workers; • Training program for roadway workers and dispatchers; • Operations management plans and procedures to be used after system acceptance;	$224,007

87. FRA has recognized that systems such as the EEPS system implemented by Amtrak through Collins Aerospace's ARINC RailwayNet^{SM} system complies with applicable regulations (communication-based/processor-based train control technology designed to address a number of rail safety issues including train-to-train collisions, over-speed derailments,

---

[41] *Northeast Corridor One-Year Implementation Plan Fiscal Year 2019*, NEC COMMISSION 1, 233 (Oct. 2018), https://nec-commission.com/app/uploads/2018/10/NEC-One-Year-Plan-FY19.pdf.

[42] *Northeast Corridor One-Year Implementation Plan Fiscal Year 2019*, NEC COMMISSION 1, 233 (Oct. 2018), https://nec-commission.com/app/uploads/2018/10/NEC-One-Year-Plan-FY19.pdf.

incursions into established work-zone limits, and train movement through a main-line switch that is in an improper position), the "dispatching system will not allow a dispatcher to release controlled track working limits until the RWIC affirmatively indicates via an electronic prompt that he or she is releasing working limits authority."[43]

88. Accordingly, Amtrak's implementation of Collins Aerospace's ARINC RailwayNet^{SM} system/AIM system and/or other similar system or method thus permits "the block to said one or more track sections to be removed by the railway control apparatus only upon receiving the release code from the user terminal in return."

89. Therefore, Amtrak, through its implementation of Collins Aerospace's ARINC RailwayNet^{SM}/AIM systems and/or other similar system has infringed and continues to infringe at least claim 5 of the '782 patent.

B. Infringement Based on Amtrak's Implementation of AMTEC System

90. In violation of 35 U.S.C. § 271(a), Amtrak has infringed and continues to infringe one or more claims of the '782 patent by making, using, offering for sale, selling, and/or importing in or into the United States a system or method covered by the '782 patent, including, but not limited to, at least Amtrak's implementation of its AMTEC system and/or other similar system or method.[44]

91. Amtrak, through its implementation AMTEC system and/or other similar system or method, infringes at least claim 5 of the '782 patent.

92. Amtrak's AMTEC system and/or other similar system or method practice a

---

[43] *Railroad Workplace Safety; Roadway Worker Protection Miscellaneous Revisions (RRR)*, FRA-2008-0086 (May 27, 2016) at 81, https://www.fra.dot.gov/eLib/Details/L17467 [hereinafter referred to as "RRR"].

[44] Further investigation may reveal that others of Amtrak's products and systems also directly or indirectly infringe at least claim 5 or other claims of the '782 patent.

"method to enhance railway control, to protect safety of railway workers on or near railway tracks."

93. AMTEC stands for Amtrak Train and Electrification Control. AMTEC is Amtrak's proprietary train dispatch system that implements Amtrak's CETC (Centralized Electrification and Train Control). Amtrak uses the AMTEC train dispatching system to improve central train control functionality across Amtrak's tracks.[45]

94. In 2018, Amtrak budgeted $2,405,319 as Northeast Corridor (NEC)-wide expenditure for implementing the SEPTA (Southeastern Pennsylvania Transportation Authority) and Metro North Enhanced Employee Protection System (EEPS) into the Amtrak CETC (Centralized Electrification and Traffic Control) systems on the NEC in October 2017 for the fiscal year 2018.[46]

C.EN.101714. CETC Amtrak System - MOFW Enhanced Employee Protection System (Segment 31). CETC - Enhanced Employee Protection System. This project will implement the SEPTA and Metro North Enhanced Employee Protection System (EEPS) into the Amtrak CETC systems on the NEC.	$2,405,319

95. In February 2019, Amtrak's Five-Year Infrastructure Asset Line Plan for FY 2019-2024 allocated $3,650,000 for FY 2019 and $5,194,913 for FY 2020 to convert the ARINC system to the AMTEC system and replace the Mid-Atlantic Division ("MAD") and Northeast Division ("NED") CETC primary and backup system with the AMTEC system in the

---

[45] *See Management Trainee Program*, AMTRAK, https://careers.amtrak.com/content/Management-Trainee-Program/?locale=en_US (last visited April 7, 2022) ("Work to support the Amtrak Train and Electrification Control (AMTEC) system… [and] work to support the expansion of the AMTEC train dispatching system to improve train control functionality across the Northeast and Southeast Divisions."); *see also Director, IT, Train Control Systems*, AMTRAK, https://careers.amtrak.com/job/Philadelphia-PA-19104/689937700/ (last visited April 7, 2022) ("Provide leadership, direction, and oversight to the IT group responsible for Amtrak's proprietary train dispatch system (AMTEC – Amtrak Centralized Electrification and Train Control).").

[46] *Northeast Corridor One-Year Implementation Plan*, NEC COMMISSION 1, 16 (Oct. 2017), http://nec-commission.com/app/uploads/2018/03/NEC-One-Year-Implementation-Plan-FY18.pdf.

Washington to Boston line.[47] One of the identified benefits of the AMTEC system is "safety."[48]

C.EN.101767 - WAS-BOS CETC ARINC TO AMTEC SOFTWARE The Washington to Boston ARINC to AMTEC Software Upgrade Project will replace the MAD and NED CETC primary and backup system with the AMTEC system. The project will be design, implement and test the new MAD and NED AMTEC systems by in-house PSCC staff as well as maintenance of all system interfaces. Transportation personnel in Wilmington, Boston and Remote locations will be able to transfer their operations to the new system. Power Director and Load Dispatcher operations will continue, either by a newly selected system by Electric Traction (E/T) personnel or by the existing system. The project will provide training on the new system to both Transportation and CETC specialists. Location: NEC wide.	**FAST Act Category:** - Improvements Also Supports: - Normalized Capital Replacement - Strategic Initiatives that improve operational performance, lower cost or improve efficiency - Statutory, regulatory, or other legal mandates	**Construction Program Priority:** N/A Project Benefits: - Safety - SOGR - Resilience

FY2019	FY2020	FY2021	FY2022	FY2023	FY2024	C.EN.101767 Total
$3,650,000	$5,194,913	$0	$0	$0	$0	$8,844,193

96. Six months earlier, in October 2018, Amtrak had estimated a total project cost of $6,593,463—with a fiscal year 2019 planned expenditure of $6,212,732—to convert ARINC system to AMTEC Software and replace the MAD and NED CETC primary and backup system with the AMTEC system in the Washington to Boston line.[49]

Washington to Boston ARINC to AMTEC Software Upgrade Project. CETC WASHINGTON TO BOSTON. C.EN.101767. FY19 scope includes completion of installation and testing of all software and hardware on the MAD-Harrisburg line and MAD-Mid-Atlantic Divisions. The project anticipates installation and testing on the NED-Springfield Line in FY19. The remaining work that is needed NED-Mainline will be start and complete in Early FY20.		$6,593,463	$6,212,732
FY19 Phases	Schedule		
MAD-Harrisburg line Phase 1	10/01/18 - 02/28/19		
MAD- Mid-Atlantic Phase 2	01/01/19 - 05/20/19		
NED-Springfield line Phase 3	06/01/19 - 10/01/19		
For project details, see Appendix A.			

[47] *Amtrak Five Year Infrastructure Asset Line Plan FY 2019-2024*, AMTRAK 1, 320, https://www.amtrak.com/content/dam/projects/dotcom/english/public/documents/corporate/businessplanning/Amtrak-Infrastructure-Asset-Line-Plan-FY20-24.pdf (last visited April 7, 2022).
[48] *Id.*
[49] *Northeast Corridor One-Year Implementation Plan Fiscal Year 2019*, NEC COMMISSION 1, 108 (Oct. 2018), https://nec-commission.com/app/uploads/2018/10/NEC-One-Year-Plan-FY19.pdf.

97. In early 2021, as part of Amtrak's new train control systems, Amtrak announced the "initiative to standardize dispatch systems on the Amtrak-developed AMTEC platform to replace the legacy Collins dispatch system [that] will provide a common dispatch platform for the NEC and the Central division that is more reliable and resilient and will reduce maintenance cost."[50] The EEPS system described in Amtrak's 2019 FY plan has been or will be implemented as part of the AMTEC system upgrade.

98. Because Amtrak's implementation of the AMTEC system increases rail safety through a reliable and resilient train control technology, and specifically includes the EEPS technology, Amtrak practices a "method to enhance railway control, to protect safety of railway workers on or near railway tracks."

99. Amtrak's AMTEC system and/or other similar system or method configures "a mobile user device of a railway field worker to provide a device user interface to display information received via a network from a railway control apparatus and to permit the railway field worker to respond to prompts displayed thereon."

100. Amtrak budgeted $224,007 as FY19 Proposed Budget for implementing an "enhanced employee protection system."

---

[50] *Five-Year Plans | Service And Asset Line Plans | FY 2021-2026*, AMTRAK 1, 149, https://www.amtrak.com/content/dam/projects/dotcom/english/public/documents/corporate/businessplanning/Amtrak-Service-Line-Asset-Line-Plans-FY21-26.pdf (last visited April 7, 2022).

All Other Amtrak Programs/Projects – Scopes	FY19 Proposed Budget
C.EN.101714. CETC AMTRAK SYSTEM-MOFW ENHANCED EMPLOYEE PROTECTION SYSTEM. Implement a system to enhance roadway worker protection when working on track under foul time or track out of service. The system will provide roadway workers with an authorization code that corresponds to the blocking protection applied in the CETC control system. Removal of the protection by the CETC train dispatcher will require the authorization code be provided by the roadway worker. The system will utilize modifications to the CETC System platform functionality and mobile devices assigned to roadway workers. Deliverables: • EEPS operating practices documentation; • Modification to each CETC System to provide EEPS functionality: - Wilmington CETC (Mid-Atlantic Division) - Boston CETC (NH to Boston, Springfield Line and MBTA Lines) - NY CETC West - PSCC - CETC Hudson-Albany Line • EEPS mobile devices for roadway workers; • Training program for roadway workers and dispatchers; • Operations management plans and procedures to be used after system acceptance;	$224,007

101. This system or method includes providing "mobile devices for roadway workers" as a part of its deliverables. It is common knowledge that mobile devices include a user interface for interaction by a user. According to Amtrak, the system, i.e., a railway control apparatus, provides an authorization code to the railway worker's mobile device. Such communication must happen over a network. Further, the roadway worker must be able to respond to prompts displayed on the mobile device in order to provide the CETC train dispatcher with the authorization code. As noted in the image below, Amtrak's implementation of AMTEC and/or other similar system or method "require[s] the authorization code be provided by the roadway worker."

All Other Amtrak Programs/Projects – Scopes	FY19 Proposed Budget
C.EN.101714. CETC AMTRAK SYSTEM-MOFW ENHANCED EMPLOYEE PROTECTION SYSTEM. Implement a system to enhance roadway worker protection when working on track under foul time or track out of service. The system will provide roadway workers with an authorization code that corresponds to the blocking protection applied in the CETC control system. Removal of the protection by the CETC train dispatcher will require the authorization code be provided by the roadway worker. The system will utilize modifications to the CETC System platform functionality and mobile devices assigned to roadway workers. Deliverables: • EEPS operating practices documentation; • Modification to each CETC System to provide EEPS functionality: - Wilmington CETC (Mid-Atlantic Division) - Boston CETC (NH to Boston, Springfield Line and MBTA Lines) - NY CETC West - PSCC - CETC Hudson-Albany Line • EEPS mobile devices for roadway workers; • Training program for roadway workers and dispatchers; • Operations management plans and procedures to be used after system acceptance;	$224,007

102. Amtrak, for its implementation of AMTEC, has purchased mobile devices for its railway workers and implemented a system whereby its CETC system permits users to respond to prompts over a network in order to provide authorization codes to the train dispatcher.[51]

103. In order to facilitate communication between the control room and the railway workers working on or near the tracks, Amtrak's AMTEC system must include a control apparatus comprising a network interface through which the railway control apparatus communicates via a network and permits the rail worker to respond via the interface on the mobile device.

104. Accordingly, Amtrak's AMTEC system and/or other similar system or method "configur[es] a mobile user device of a railway field worker to provide a device user interface to display information received via a network from a railway control apparatus and to permit the railway field worker to respond to prompts displayed thereon."

105. Amtrak's AMTEC system and/or other similar system or method provides "a terminal user interface on a terminal to permit a terminal user of the terminal request the railway control apparatus to place a block on one or more specified track sections to permit a railway field worker to enter the track sections while blocking railway traffic to said track sections."

106. AMTEC is a CETC system which, by definition, is configured for centralized control of traffic of a railway network.[52] Further, the AMTEC system can place tracks in "foul time:"

---

[51] *Northeast Corridor One-Year Implementation Plan Fiscal Year 2019*, NEC COMMISSION 1, 233 (Oct. 2018), https://nec-commission.com/app/uploads/2018/10/NEC-One-Year-Plan-FY19.pdf [hereinafter referred to as "*NEC One-Year Plan 2019*"].

[52] *See A Guide to Key Railroad Terminology for the Northeast Corridor*, AMTRAK, https://media.amtrak.com/wp-content/uploads/2017/07/NEC-Terms-primer-v1.pdf (last visited April 3, 2022) ("Dispatchers use computerized Centralized Traffic & Electrification Control (CETC) systems to [centrally] control train movement over most of the NEC.").

All Other Amtrak Programs/Projects – Scopes	FY19 Proposed Budget
C.EN.101714. CETC AMTRAK SYSTEM-MOFW ENHANCED EMPLOYEE PROTECTION SYSTEM. Implement a system to enhance roadway worker protection when working on track under foul time or track out of service. The system will provide roadway workers with an authorization code that corresponds to the blocking protection applied in the CETC control system. Removal of the protection by the CETC train dispatcher will require the authorization code be provided by the roadway worker. The system will utilize modifications to the CETC System platform functionality and mobile devices assigned to roadway workers. Deliverables: • EEPS operating practices documentation; • Modification to each CETC System to provide EEPS functionality: - Wilmington CETC (Mid-Atlantic Division) - Boston CETC (NH to Boston, Springfield Line and MBTA Lines) - NY CETC West - PSCC - CETC Hudson-Albany Line • EEPS mobile devices for roadway workers; • Training program for roadway workers and dispatchers; • Operations management plans and procedures to be used after system acceptance;	$224,007

107. Foul time is defined as "a method of establishing working limits on controlled track in which a roadway worker is notified by the train dispatcher or control operator that no trains will operate within a specific segment of controlled track until the roadway worker reports clear of the track." 49 C.F.R. Part 214.7. The "specified segments" referred to in the rule are the "specified track sections" referred to in this claim element.

108. The AMTEC system, as a CETC system, must include terminal user interface on a terminal to permit a terminal user of the terminal to place a specified track section in foul time.[53]

109. According to Amtrak's 2019 FY plan, it has implemented an enhanced employee protection system (EEPS) that operates by "provid[ing] roadway workers with an authorization code that corresponds to the ***blocking protection*** applied in the CETC control system."[54] The referenced "blocking protection applied in the CETC control system [AMTEC]" is a reference to the claimed "railway control apparatus to place a block on one or more specified track sections."

[53] *2019 NEC One-Year Plan* at 233.
[54] *2019 NEC One-Year Plan* at 233 (emphasis added).

All Other Amtrak Programs/Projects – Scopes	FY19 Proposed Budget
C.EN.101714. CETC AMTRAK SYSTEM-MOFW ENHANCED EMPLOYEE PROTECTION SYSTEM. Implement a system to enhance roadway worker protection when working on track under foul time or track out of service. The system will provide roadway workers with an authorization code that corresponds to the blocking protection applied in the CETC control system. Removal of the protection by the CETC train dispatcher will require the authorization code be provided by the roadway worker. The system will utilize modifications to the CETC System platform functionality and mobile devices assigned to roadway workers. Deliverables: • EEPS operating practices documentation; • Modification to each CETC System to provide EEPS functionality: - Wilmington CETC (Mid-Atlantic Division) - Boston CETC (NH to Boston, Springfield Line and MBTA Lines) - NY CETC West - PSCC - CETC Hudson-Albany Line • EEPS mobile devices for roadway workers; • Training program for roadway workers and dispatchers; • Operations management plans and procedures to be used after system acceptance;	$224,007

110. Accordingly, Amtrak's AMTEC system and/or other similar system or method provides "a terminal user interface on a terminal to permit a terminal user of the terminal request the railway control apparatus to place a block on one or more specified track sections to permit a railway field worker to enter the track sections while blocking railway traffic to said track sections."

111. Amtrak's AMTEC system and/or other similar system or method generates "by the railway control apparatus a release code and transmit[s] the release code to an electronic contact address accessible by the railway field worker via operation of the user interface of the user terminal."

112. According to Amtrak's 2019 FY plan, it has implemented an enhanced employee protection system (EEPS) that operates by "provid[ing] roadway workers with an authorization code that corresponds to the blocking protection applied in the CETC control system."[55] The 2019 FY plan further specifies purchasing "EEPS mobile devices for roadway workers."[56]

[55] *2019 NEC One-Year Plan* at 233.
[56] *Id.*

All Other Amtrak Programs/Projects – Scopes	FY19 Proposed Budget
C.EN.101714. CETC AMTRAK SYSTEM-MOFW ENHANCED EMPLOYEE PROTECTION SYSTEM. Implement a system to enhance roadway worker protection when working on track under foul time or track out of service. The system will provide roadway workers with an authorization code that corresponds to the blocking protection applied in the CETC control system. Removal of the protection by the CETC train dispatcher will require the authorization code be provided by the roadway worker. The system will utilize modifications to the CETC System platform functionality and mobile devices assigned to roadway workers. Deliverables: • EEPS operating practices documentation; • Modification to each CETC System to provide EEPS functionality: - Wilmington CETC (Mid-Atlantic Division) - Boston CETC (NH to Boston, Springfield Line and MBTA Lines) - NY CETC West - PSCC - CETC Hudson-Albany Line • EEPS mobile devices for roadway workers; • Training program for roadway workers and dispatchers; • Operations management plans and procedures to be used after system acceptance;	$224,007

113. In order to provide the railway workers with an authorization code to their EEPS mobile devices, Amtrak's AMTEC system has a database containing contact information for each railway worker (i.e., a railway personnel contact database registering, for each railway personnel, an electronic contact address of the railway personnel) and retrieve the electronic contact address for the railway worker from the electronic contact database.

All Other Amtrak Programs/Projects – Scopes	FY19 Proposed Budget
C.EN.101714. CETC AMTRAK SYSTEM-MOFW ENHANCED EMPLOYEE PROTECTION SYSTEM. Implement a system to enhance roadway worker protection when working on track under foul time or track out of service. The system will provide roadway workers with an authorization code that corresponds to the blocking protection applied in the CETC control system. Removal of the protection by the CETC train dispatcher will require the authorization code be provided by the roadway worker. The system will utilize modifications to the CETC System platform functionality and mobile devices assigned to roadway workers. Deliverables: • EEPS operating practices documentation; • Modification to each CETC System to provide EEPS functionality: - Wilmington CETC (Mid-Atlantic Division) - Boston CETC (NH to Boston, Springfield Line and MBTA Lines) - NY CETC West - PSCC - CETC Hudson-Albany Line • EEPS mobile devices for roadway workers; • Training program for roadway workers and dispatchers; • Operations management plans and procedures to be used after system acceptance;	$224,007

114. Additionally, in order to provide railway workers with an authorization code that corresponds to the blocking protection applied in the CETC control system, the AMTEC system must generate the authorization code. Further, the *2019 NEC One-year-Plan* specifically notes that the AMTEC system "will provide roadway workers with an authorization code" which meets the claim element "transmitting the release code to an electronic contact address accessible

by the railway field worker via operation of the user interface of the user terminal."[57]

115. Accordingly, Amtrak's AMTEC system and/or other similar system or method generates "by the railway control apparatus a release code and transmit[s] the release code to an electronic contact address accessible by the railway field worker via operation of the user interface of the user terminal."

116. Amtrak's AMTEC system and/or other similar system or method permits "the block to said one or more track sections to be removed by the railway control apparatus only upon receiving the release code from the user terminal in return."

117. According to Amtrak's 2019 FY plan, it has implemented an enhanced employee protection system (EEPS) that operates by "provid[ing] roadway workers with an authorization code that corresponds to the blocking protection applied in the CETC control system."[58] The system notes that "removal of the protection by the CETC train dispatcher will require the authorization code be provided by the roadway worker."[59]

All Other Amtrak Programs/Projects – Scopes	FY19 Proposed Budget
C.EN.101714. CETC AMTRAK SYSTEM-MOFW ENHANCED EMPLOYEE PROTECTION SYSTEM. Implement a system to enhance roadway worker protection when working on track under foul time or track out of service. The system will provide roadway workers with an authorization code that corresponds to the blocking protection applied in the CETC control system. Removal of the protection by the CETC train dispatcher will require the authorization code be provided by the roadway worker. The system will utilize modifications to the CETC System platform functionality and mobile devices assigned to roadway workers. Deliverables: • EEPS operating practices documentation; • Modification to each CETC System to provide EEPS functionality: - Wilmington CETC (Mid-Atlantic Division) - Boston CETC (NH to Boston, Springfield Line and MBTA Lines) - NY CETC West - PSCC - CETC Hudson-Albany Line • EEPS mobile devices for roadway workers; • Training program for roadway workers and dispatchers; • Operations management plans and procedures to be used after system acceptance;	$224,007

118. In order to ensure that removal of the protection by the CETC train dispatcher is

[57] *Id.*
[58] *2019 NEC One-Year Plan* at 233.
[59] *Id.*

not done prematurely, the AMTEC system requires the authorization code provided by the railway worker; the AMTEC system will then remove block only upon entry of the removal code from the railway worker.

119. Accordingly, Amtrak's AMTEC system and/or other similar system or method permits "the block to said one or more track sections to be removed by the railway control apparatus only upon receiving the release code from the user terminal in return."

***

120. As direct and proximate result of Amtrak's infringement of the '782 patent, Railware has been injured and has been caused significant harm and financial damages.

121. On information and belief, Amtrak has also induced and continues to induce infringement of at least claim 5 of the '782 patent in violation of 35 U.S.C. § 271(b).

122. Amtrak induces its users, and/or developers of its systems to infringe at least claim 5 of the '782 patent, and does so with the specific intent, by providing instructions, directions, information, and/or knowledge on how to use its systems and/or incorporate its systems into other products (including both the Collins Aerospace RailwayNet/AIM systems and the AMTEC systems or similar systems or methods). For example, Amtrak provides a "Management Trainee Program" through which trainees "work to support the Amtrak Train and Electrification Control (AMTEC) system by updating the track model software design and configuration work supporting new interlocking construction and reconfiguration of existing interlockings, as well as similar technical work to support the expansion of the AMTEC train dispatching system to improve train control functionality across the Northeast and Southeast

Divisions."[60]

123. As a direct and proximate result of Amtrak's infringement of the '782 patent, Railware has been injured and has been caused significant harm and financial damages.

124. Upon information and belief, Amtrak, without Railware's permission, has been and is presently infringing at least claim 5 of the '782 patent in violation of 35 U.S.C. § 271(c), by selling or offering to sell an apparatus that is intended for use in practicing the '782 patent that is a material part of the invention to its customers, purchasers, users, and/or developers.

125. The apparatuses and systems used, sold, or offered for sale by Amtrak have no substantial noninfringing uses. Further, they are not staple articles of commerce and constitute a material part of the invention. Thus, Amtrak knew or should have known that the combination for which their apparatuses and systems were made was protected by the '782 patent.

126. As such, Amtrak has contributorily infringed and continue to infringe the '782 patent, as set forth herein, knowing that the apparatuses or systems would be made or adapted for use in an infringing manner.

127. To the extent the marking requirements of 35 U.S.C. § 287 apply, Amtrak has had constructive knowledge of the '782 patent at least since October 21, 2020. Amtrak's continued infringement on or after this date is in spite of the objectively high likelihood that its activities constitute infringement of a valid patent, and this risk was either known or so obvious that it should have been known to Amtrak. Thus, Amtrak's continued infringement at least as of October 21, 2020, or as of the filing of this Complaint is willful and deliberate.

128. Railware has suffered and continues to suffer damages and irreparable harm as a

[60] https://careers.amtrak.com/content/Management-Trainee-Program/?locale=en_US (last visited May 6, 2022).

result of Amtrak's past and ongoing infringement. Unless and until Amtrak's infringement is enjoined, Railware will continue to be damaged and irreparably harmed.

129. Railware is entitled to all remedies at law and equity including, but not limited to, an injunction against Amtrak's infringement of the '782 patent pursuant to 35 U.S.C. § 283.

130. Railware is entitled to damages for Amtrak's infringement of the '782 patent including, but not limited to, damages pursuant to 35 U.S.C. §§ 284 and 285.

SECOND CLAIM FOR RELIEF

(Infringement of the '835 patent)

131. Railware repeats and incorporates by reference all prior allegations of this Complaint as if fully set forth herein.

132. Railware is the owner by assignment of all rights, title, and interest in and to the '835 patent.

133. The '835 patent is valid and enforceable.

134. Claim 19 of the '835 patent recites:

> A method for controlling railway access using a railway traffic control apparatus of a centralized railway control system configured for centralized control of traffic of a centrally controllable railway network including plural railways and a plurality of railway traffic interlocks dispersed in said plural railways constituting said railway network, the method comprising:
>
> > providing a user interface of the railway traffic control apparatus, including a block placing part to place a block on one or more specified track sections in any of said plural railways constituting said railway network that is managed by centralized control operation from the railway traffic control apparatus, the railway traffic control apparatus controlling, by said centralized control operation, one or more interlocks amongst the plurality of railway traffic interlocks dispersed in said plural railways constituting said railway network, to block railway traffic to the specified track sections and thereby to permit a railway field worker to enter the track sections;
> >
> > generating a removal code, determining an electronic contact address of the railway field worker by accessing a rail personnel contact database registering, for each railway personnel, electronic contact information of the

railway personnel, and transmitting the removal code to the electronic contact address of the railway field worker; and

permitting the block to said one or more track sections to be removed only upon entry of the removal by said centralized control operation from the railway traffic control apparatus.

A. Infringement Based on Amtrak's Implementation of Collins Aerospace's ARINC RailwayNet^{SM} System/AIM System

135. In violation of 35 U.S.C. § 271(a), Amtrak has infringed and continues to infringe one or more claims of the '835 patent by making, using, offering for sale, selling, and/or importing in or into the United States a system or method covered by the '835 patent, including, but not limited to, at least Amtrak's implementation and/or use of Collins Aerospace's ARINC RailwayNet^{SM} system/AIM system and/or other similar system or method.[61]

136. Amtrak, through its implementation and/or use of Collins Aerospace's ARINC RailwayNet^{SM} system/AIM system and/or other similar system or method, infringes at least claim 19 of the '835 patent.

137. Amtrak's implementation of Collins Aerospace's ARINC RailwayNet^{SM} system/AIM system and/or other similar system or method practices a "method for controlling railway access using a railway traffic control apparatus of a centralized railway control system configured for centralized control of traffic of a centrally controllable railway network including plural railways and a plurality of railway traffic interlocks dispersed in said plural railways constituting said railway network."

138. Amtrak owns and/or operates a number of dispatch centers along the Northeast Corridor (NEC) spine including in Boston, MA, New York, NY (Penn Station), and

[61] Further investigation may reveal that others of Amtrak's products and systems also directly or indirectly infringe at least claim 19 or other claims of the '835 patent.

Philadelphia, PA.[62] Dispatching centers are centralized railway control systems using methods to control access to railway tracks configured for centralized control of traffic of a centrally controllable railway network including plural railways and a plurality of railway traffic interlocks dispersed in said plural railways constituting said railway network.

139. Collins Aerospace advertises that its AIM system provides "centralized traffic control," "train monitoring and control," "automatic route setting/automatic routing," "automatic traffic regulation," and "bulletins, authorities," and "restrictions management."[63]

Centralized Traffic Control and SCADA

Collins designs and integrates state-of-the-art rail control solutions using our ARINC Advanced Information Management (AIM®) platform. AIM serves as an end-to-end solution for all rail control requirements, including SCADA, Centralized Traffic Control, Positive Train Control (PTC) and control center integration. Highly flexible and feature-rich, AIM enables railroads to maximize operational efficiency, cost-effectiveness and safety, all while providing an environment protected by the latest tools and techniques in cybersecurity.

KEY AREAS OF EXPERTISE

- Train monitoring and control
- Automatic train tracking
- Automatic route setting/ automatic routing
- Automatic traffic regulation and schedule deviation
- Schedule management
- Integrated yard management
- Bulletins, authorities and restrictions management
- Employee in Charge (EIC) terminals
- Emergency Operating Procedures (EOP)
- Power planning
- Playback and simulation
- Data acquisition
- Interface integration

140. Amtrak implemented the Collins Aerospace-developed RailwayNet[SM] as a SaaS

[62] *See CETC Dispatch*, RAILROAD.NET, https://railroad.net/cetc-dispatch-t66499-15.html (last visited Apr. 04, 2022); *see also Supra* ¶¶ 22–29.
[63] *Intelligence-Based Rail Solutions*, Collins Aerospace, https://www.collinsaerospace.com/-/media/project/collinsaerospace/collinsaerospace-website/product-assets/marketing/r/rail/arinc-rail-solutions-for-passengers.pdf?rev=e7e5ddbff2de4154ba265f03e27f14d3.

and/or IaaS—a software/infrastructure as a service—product that provides "full-featured network management and infrastructure, hardware, network, operating systems, and applications for fault, performance, security and configuration management."[64] Amtrak has further implemented Collins Aerospace-developed AIM software.

141. According to Collins Aerospace, RailwayNet^{SM} helps facilitate the increases in safety and reliability that PTC provides.[65]

142. Collins Aerospace advertises that RailwayNet^{SM}, which Amtrak uses, improves rail safety. "This system refers to communication-based/processor-based train control technology designed to address a number of rail safety issues, including train-to-train collisions, over-speed derailments, incursions into established work-zone limits, and train movement through a main-line switch that is in an improper position."[66]

---

[64] ROCKWELL COLLINS INC., ARINC RAILWAYNET WHITE PAPER 6 (2016), https://www.rockwellcollins.com/-/media/Files/Unsecure/Services-And-Support/Information-Management/ARINC-Rail/RailwayNet/ARINC-Rail_RailwayNet_white-paper.ashx [hereinafter referred to as "White Paper"]; *see also Supra* ¶¶ 33–41.

[65] *Amtrak signs nationwide contract for Rockwell Collins' ARINC RailwayNet^{SM} Positive Train Control service*, COLLINS AEROSPACE (Sep. 6, 2017), https://www.collinsaerospace.com/-/media/project/collinsaerospace/collinsaerospace-website/product-assets/files/public/services-and-support/information-management/arinc-rail/amtrak-and-railwaynet-press-release.pdf.

[66] White Paper at 3.

143. In 2017, Amtrak signed an agreement with Rockwell Collins to implement the company's ARINC RailwayNet^{SM} service on approximately 310 Amtrak locomotives operating across the United States. RailwayNet^{SM} was implemented nationwide on Amtrak routes, where it operates its trains over other railroad companies' tracks. Under the agreement, Rockwell Collins initialized Amtrak's fleet enabling its trains to run as "tenants" on 19 different host railroads, including Class 1, commuter and freight tracks. As explained below, ARINC RailwayNet^{SM} is a hosted network, messaging and application platform, designed to assist operators in meeting the requirements mandated by the Rail Safety Improvement Act of 2008 (the "Act"). The Act directs the Federal Railroad Administration (FRA) to mandate new regulations focused on railroad safety. When used in conjunction with the operator's PTC infrastructure, RailwayNet^{SM} helps facilitate the increases in safety and reliability that PTC provides.[67]

144. The "ARINC RailwayNet^{SM} integrations server and software provides

[67] *Amtrak signs nationwide contract for Rockwell Collins' ARINC RailwayNet^{SM} Positive Train Control service*, COLLINS AEROSPACE (Sep. 6, 2017), https://www.collinsaerospace.com/-/media/project/collinsaerospace/collinsaerospace-website/product-assets/files/public/services-and-support/information-management/arinc-rail/amtrak-and-railwaynet-press-release.pdf.

connectivity between the railroad IT systems and the hosted back-office components."[68] The integration server provides an interface with various system components.

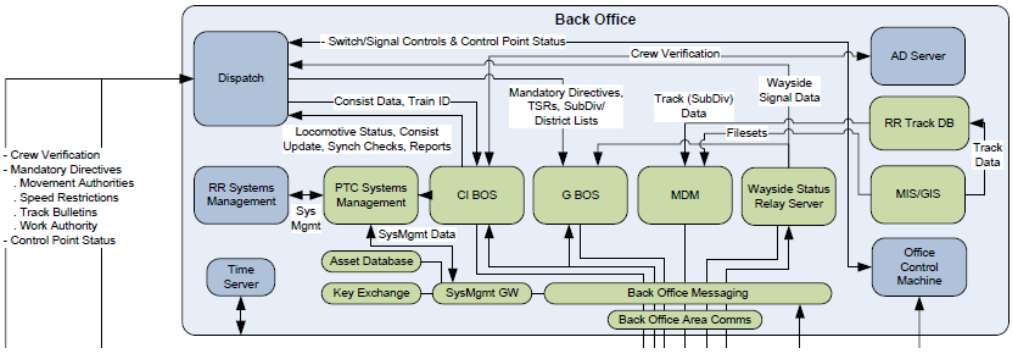

AIM® integration server

The ARINC RailwayNet integrations server and software provides connectivity between the railroad IT systems and the hosted back-office components. The functions of this application include:

- Interface with customer's IT gateway
- Interface with back office
- Manage crew authentication through the customer's IT gateway
- Functions to assign train ID to trains based on the clearance number
- Functions to manage train consist through the customer's IT gateway
- Functions to track, display, and store events and alarms

Centralized Traffic Control and SCADA

Collins designs and integrates state-of-the-art rail control solutions using our ARINC Advanced Information Management (AIM®) platform. AIM serves as an end-to-end solution for all rail control requirements, including SCADA, Centralized Traffic Control, Positive Train Control (PTC) and control center integration. Highly flexible and feature-rich, AIM enables railroads to maximize operational efficiency, cost-effectiveness and safety, all while providing an environment protected by the latest tools and techniques in cybersecurity.

KEY AREAS OF EXPERTISE

- Train monitoring and control
- Automatic train tracking
- Automatic route setting/ automatic routing
- Automatic traffic regulation and schedule deviation
- Schedule management
- Integrated yard management
- Bulletins, authorities and restrictions management
- Employee in Charge (EIC) terminals
- Emergency Operating Procedures (EOP)
- Power planning
- Playback and simulation
- Data acquisition
- Interface integration

145. Collins Aerospace's ARINC RailwayNet[SM]/AIM system and/or other similar system or method, implemented by Amtrak, provides the network connections and office applications required to exchange critical information among Class I railroads and their partner

[68] *See* White Paper at 8 (illustrating "AIM® integration server").

short line commuter railroads. It is available on a subscription basis as hosted SaaS (software as a service) and IaaS (infrastructure as a service) solutions, and PTC messaging from the back office to the locomotive through VHF, cellular, and Wi-Fi is also available.[69]

146. The ARINC RailwayNet^{SM}/AIM system, as implemented by Amtrak, further controls plural railways and a plurality of railway traffic interlocks. Specifically, Centralized Train Control systems, such as that employed by Amtrak and its implementation of ARINC RailwayNet^{SM}/AIM and/or other similar system or method "consists of a centralized train dispatcher's office that controls railroad interlocking and traffic flows in portions of the rail system designated as CTC territory."[70]

147. Collins Aerospace implemented the ARINC RailwayNet^{SM}/AIM system and/or other similar system or method—a hosted network, messaging and application platform as amended—on Amtrak's 19 different railroads, including commuter and freight routes that host Amtrak services.

148. Accordingly, Amtrak's implementation of Collins Aerospace's ARINC RailwayNet^{SM}/AIM system and/or other similar system or method practices a "method for controlling railway access using a railway traffic control apparatus of a centralized railway control system configured for centralized control of traffic of a centrally controllable railway network including plural railways and a plurality of railway traffic interlocks dispersed in said plural railways constituting said railway network."

149. Amtrak's implementation of Collins Aerospace's ARINC RailwayNet^{SM}/AIM system and/or other similar system or method provides "a user interface of the railway traffic

---

[69] *New from Rockwell Collins: Shared-network PTC platform*, RAILWAY AGE 14 (July 2016), https://issuu.com/railwayage/docs/july_2016_railway_age.
[70] *CTC*, WIKIPEDIA, https://en.wikipedia.org/wiki/Centralized_traffic_control.

control apparatus, including a block placing part to place a block on one or more specified track sections in any of said plural railways constituting said railway network that is managed by centralized control operation from the railway traffic control apparatus, the railway traffic control apparatus controlling, by said centralized control operation, one or more interlocks amongst the plurality of railway traffic interlocks dispersed in said plural railways constituting said railway network, to block railway traffic to the specified track sections and thereby to permit a railway field worker to enter the track sections."

150. Amtrak budgeted $224,007 as FY19 Proposed Budget for implementing an "enhanced employee protection system."

All Other Amtrak Programs/Projects – Scopes	FY19 Proposed Budget
C.EN.101714. CETC AMTRAK SYSTEM-MOFW ENHANCED EMPLOYEE PROTECTION SYSTEM. Implement a system to enhance roadway worker protection when working on track under foul time or track out of service. The system will provide roadway workers with an authorization code that corresponds to the blocking protection applied in the CETC control system. Removal of the protection by the CETC train dispatcher will require the authorization code be provided by the roadway worker. The system will utilize modifications to the CETC System platform functionality and mobile devices assigned to roadway workers. Deliverables: • EEPS operating practices documentation; • Modification to each CETC System to provide EEPS functionality: - Wilmington CETC (Mid-Atlantic Division) - Boston CETC (NH to Boston, Springfield Line and MBTA Lines) - NY CETC West - PSCC - CETC Hudson-Albany Line • EEPS mobile devices for roadway workers; • Training program for roadway workers and dispatchers; • Operations management plans and procedures to be used after system acceptance;	$224,007

151. Collins Aerospace's ARINC RailwayNet^{SM}AIM system, implemented by Amtrak, that places track sections in "foul time" is a "block placing part" as recited in this claim element. Specifically, FRA regulations 49 C.F.R. § 214.323 defines "foul time" as "a method of establishing working limits on controlled track in which a roadway worker is notified by the train dispatcher or control operator that *no trains will operate within a specific segment of controlled track until the roadway worker reports clear of the track*." Because Amtrak, through its

implementation of ARINC RailwayNet^{SM}/AIM, has the ability to place tracks in foul time, it includes a "a block placing part to place a block on one or more specified track sections in any of said plural railways constituting said railway network that is managed by centralized control operation from the railway traffic control apparatus, the railway traffic control apparatus controlling, by said centralized control operation, one or more interlocks amongst the plurality of railway traffic interlocks dispersed in said plural railways constituting said railway network, to block railway traffic to the specified track sections and thereby to permit a railway field worker to enter the track sections." Moreover, in order to place a track segment in "foul time," the system must provide a "user interface of the railway traffic control apparatus" to permit the dispatcher to establish the blocking protection.

152. Collins Aerospace advertises that its AIM system provides "train monitoring and control," automatic route setting/automatic routing," "automatic traffic regulation," and "bulletins, authorities, and restrictions management."[71] One or more of these functionalities encompasses the claimed block placing part.

[71] *Intelligence-Based Rail Solutions*, Collins Aerospace, https://www.collinsaerospace.com/-/media/project/collinsaerospace/collinsaerospace-website/product-assets/marketing/r/rail/arinc-rail-solutions-for-passengers.pdf?rev=e7e5ddbff2de4154ba265f03e27f14d3.

Centralized Traffic Control and SCADA

Collins designs and integrates state-of-the-art rail control solutions using our ARINC Advanced Information Management (AIM®) platform. AIM serves as an end-to-end solution for all rail control requirements, including SCADA, Centralized Traffic Control, Positive Train Control (PTC) and control center integration. Highly flexible and feature-rich, AIM enables railroads to maximize operational efficiency, cost-effectiveness and safety, all while providing an environment protected by the latest tools and techniques in cybersecurity.

KEY AREAS OF EXPERTISE

- Train monitoring and control
- Automatic train tracking
- Automatic route setting/ automatic routing
- Automatic traffic regulation and schedule deviation
- Schedule management
- Integrated yard management
- Bulletins, authorities and restrictions management
- Employee in Charge (EIC) terminals
- Emergency Operating Procedures (EOP)
- Power planning
- Playback and simulation
- Data acquisition
- Interface integration

153. Collins Aerospace's ARINC RailwayNet^{SM}/AIM system, implemented by Amtrak, is a SaaS and IaaS product that provides "full-featured network management and infrastructure, hardware, network, operating systems, and applications for fault, performance, security and configuration management."[72] Additionally, RailwayNet^{SM} is "designed to help meet the availability standards required for PTC operations."[73] Because RailwayNet^{SM} is designed to support railroads to meet the PTC requirements, RailwayNet^{SM} should be configured to manage train movements, including placing blocks on one or more sections of railway track to prevent trains from traversing the one or more sections of railway track.

154. In order to comply with and implement FRA's regulations (communication-based/processor-based train control technology designed to address a number of railway safety

[72] White Paper at 6.
[73] *Id.*

issues including train-to-train collisions, over-speed derailments, incursions into established work-zone limits, and train movement through a main-line switch that is in an improper position), RailwayNet^{SM}/AIM system and/or other similar system or method is configured to place a block on one or more sections of railway track to prevent trains from traversing the one or more sections of railway track.

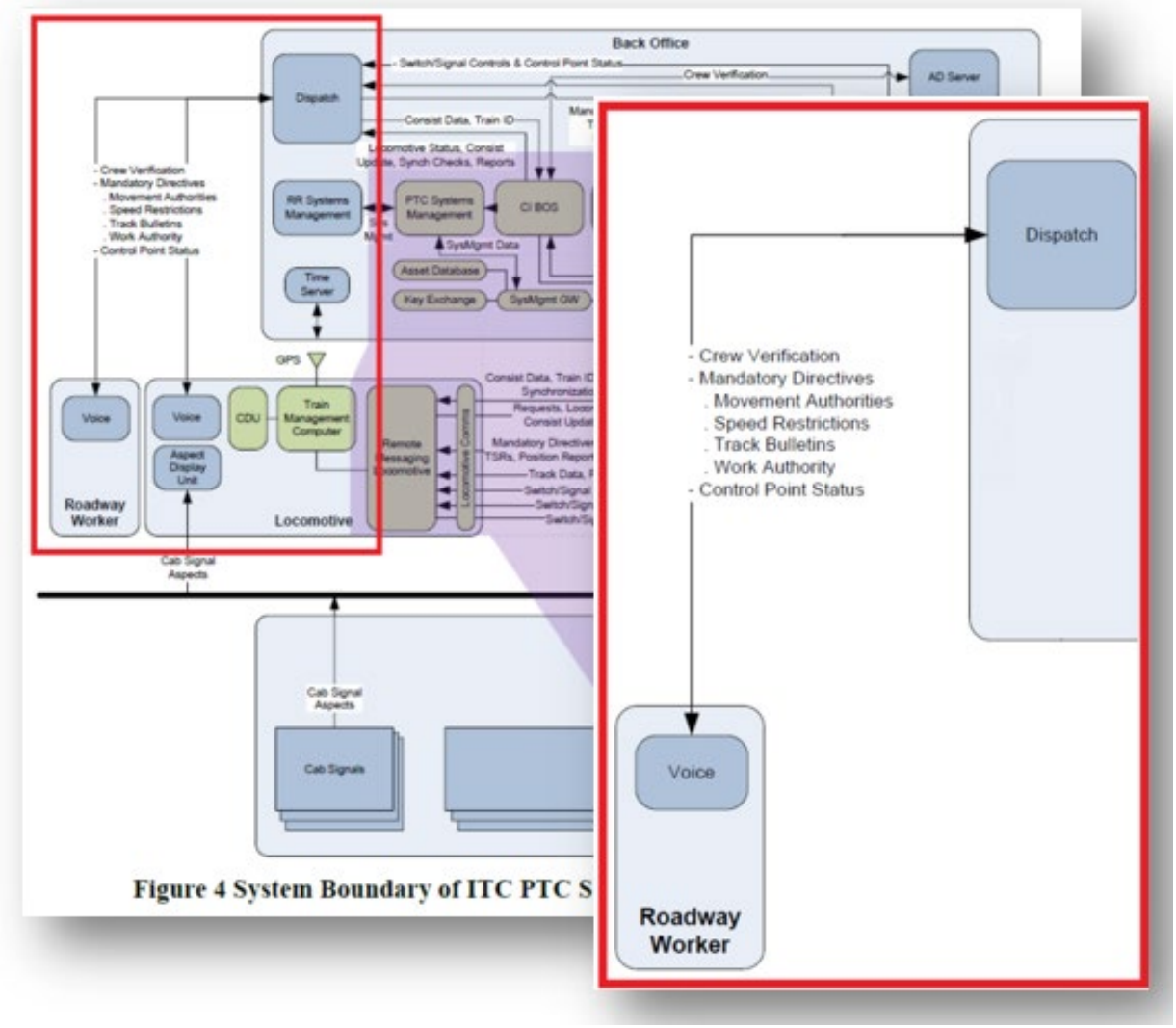

Figure 4 System Boundary of ITC PTC S

155. Accordingly, Amtrak's implementation of Collins Aerospace's ARINC RailwayNet^{SM}/AIM system and/or other similar system or method provides a "a user interface of the railway traffic control apparatus, including a block placing part to place a block on one or more specified track sections in any of said plural railways constituting said railway network that

is managed by centralized control operation from the railway traffic control apparatus, the railway traffic control apparatus controlling, by said centralized control operation, one or more interlocks amongst the plurality of railway traffic interlocks dispersed in said plural railways constituting said railway network, to block railway traffic to the specified track sections and thereby to permit a railway field worker to enter the track sections."

156. Amtrak's implementation of Collins Aerospace's ARINC RailwayNet^{SM}/AIM system and/or other similar system or method further generates "a removal code, determin[es] an electronic contact address of the railway field worker by accessing a rail personnel contact database registering, for each railway personnel, electronic contact information of the railway personnel, and transmit[s] the removal code to the electronic contact address of the railway field worker."

157. Amtrak budgeted an additional $224,007 in FY19 for implementing a system to enhance railway worker protection when working on track under foul time or track out of service. The system provides railway workers with an authorization code that corresponds to the blocking protection applied in the CETC control system via their mobile devices. Removal of the protection by the CETC train dispatcher will require the authorization code be provided by the railway worker. The system will utilize modifications to the CETC System platform functionality and mobile devices assigned to railway workers.

158. The deliverables included modification to each CETC System to provide EEPS functionality in at least Wilmington CETC (Mid-Atlantic Division); Boston CETC (NH to Boston, Springfield Line and MBTA Lines); NY CETC West; PSCC (Pennsylvania Station Central Control); and CETC Hudson-Albany Line**.** The deliverables also included EEPS mobile devices for railway workers; EEPS operating practices documentation; training program for

railway workers and dispatchers; and operations management plans and procedures to be used after system acceptance.[74]

159. In a report authored by Collins Aerospace and submitted to the U.S. Department of Transportation, Collins Aerospace illustrates the claimed railway control apparatus as the "back office" in the below diagram.

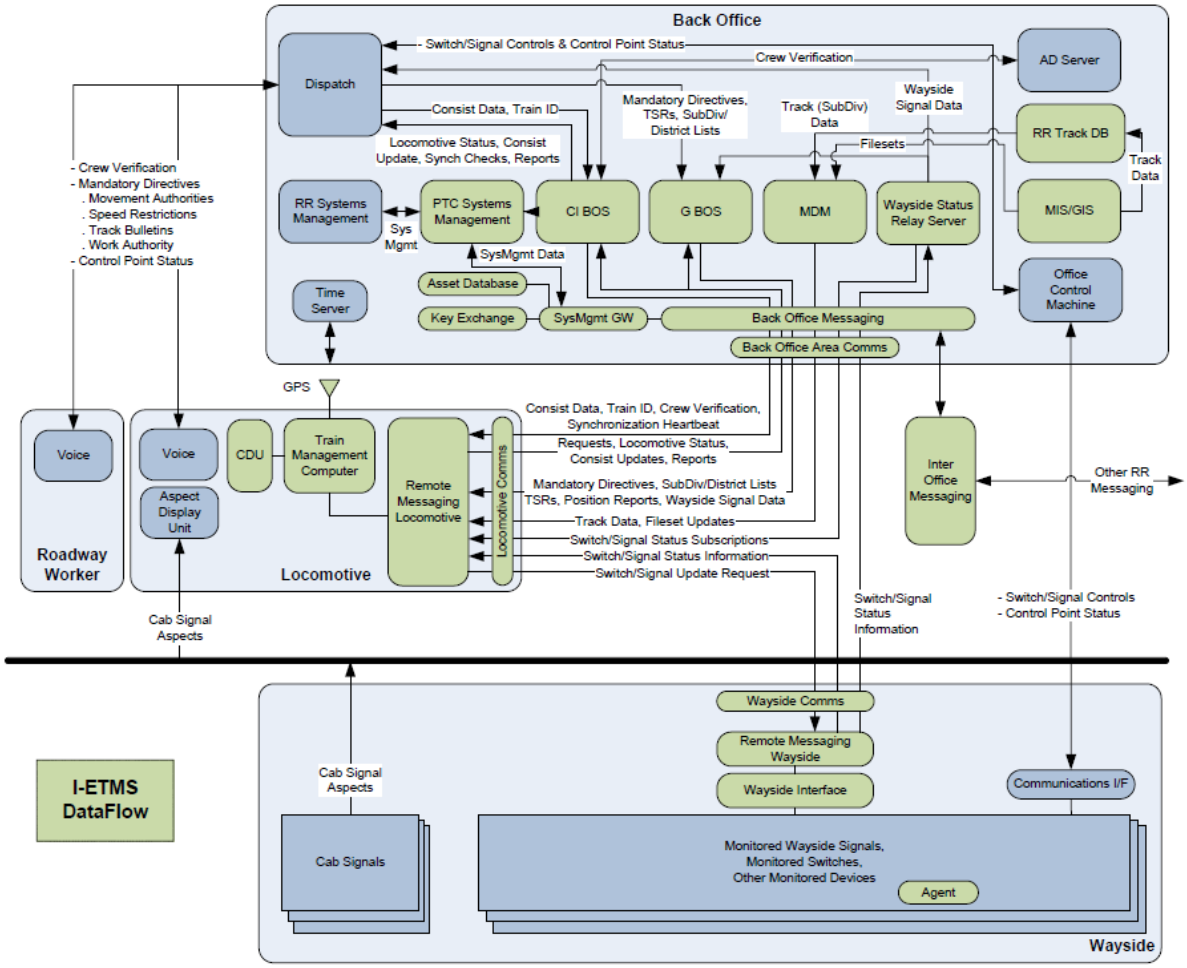

Figure 2 I-ETMS PTC Message Flows

160. Amtrak, for its implementation of Collins Aerospace's ARINC

[74] *Northeast Corridor One-Year Implementation Plan Fiscal Year 2019*, NEC COMMISSION 1, 233 (Oct. 2018), https://nec-commission.com/app/uploads/2018/10/NEC-One-Year-Plan-FY19.pdf.

RailwayNet^{SM}/AIM system and/or other similar system or method, has purchased mobile devices for its railway workers and implemented a system whereby its CETC system sends authorization codes to the railway workers. In order to know which mobile device to send the authorization code to, the RailwayNet^{SM}/AIM system, as implemented by Amtrak, must have a database storing the electronic contact address for the railway workers.[75]

All Other Amtrak Programs/Projects – Scopes	FY19 Proposed Budget
C.EN.101714. CETC AMTRAK SYSTEM-MOFW ENHANCED EMPLOYEE PROTECTION SYSTEM. Implement a system to enhance roadway worker protection when working on track under foul time or track out of service. The system will provide roadway workers with an authorization code that corresponds to the blocking protection applied in the CETC control system. Removal of the protection by the CETC train dispatcher will require the authorization code be provided by the roadway worker. The system will utilize modifications to the CETC System platform functionality and mobile devices assigned to roadway workers. Deliverables: • EEPS operating practices documentation; • Modification to each CETC System to provide EEPS functionality: - Wilmington CETC (Mid-Atlantic Division) - Boston CETC (NH to Boston, Springfield Line and MBTA Lines) - NY CETC West - PSCC - CETC Hudson-Albany Line • EEPS mobile devices for roadway workers; • Training program for roadway workers and dispatchers; • Operations management plans and procedures to be used after system acceptance;	$224,007

161. According to Amtrak's Northeast Corridor Annual Report for fiscal year 2017, Amtrak allocated more than $420,000 in implementing the Enhanced Employee Protection System (EEPS) in the Northeast Corridor through its implementation of Collins Aerospace's ARINC RailwayNet^{SM}.[76] It also specifies providing back-office infrastructure and messaging, including "[s]torage and delivery of crew and consist information, train IDs and clearances."[77]

162. Collins Aerospace has stated that the ARINC RailwayNet^{SM} system implemented

[75] *Northeast Corridor One-Year Implementation Plan Fiscal Year 2019*, NEC COMMISSION 1, 233 (Oct. 2018), https://nec-commission.com/app/uploads/2018/10/NEC-One-Year-Plan-FY19.pdf [hereinafter referred to as "*NEC One-Year Plan 2019*"].
[76] *Northeast Corridor Annual Report: Operations and Infrastructure*, NEC COMMISSION 1, 49 (April 2018), https://nec-commission.com/app/uploads/2018/04/NEC-Annual-Report-FY17.pdf.
[77] White Paper at 7.

by Amtrak is a SaaS and IaaS product that provides "full-featured network management and infrastructure, hardware, network, operating systems, and applications for fault, performance, security and configuration management."[78] It additionally specifies enabling ITC PTC interoperability and compliance with I-ETMS systems.[79]

163. According to Collins Aerospace, its RailwayNet[SM] system supports I-ETMS message flows, including communications with railway workers to communicate crew verification and mandatory directives.

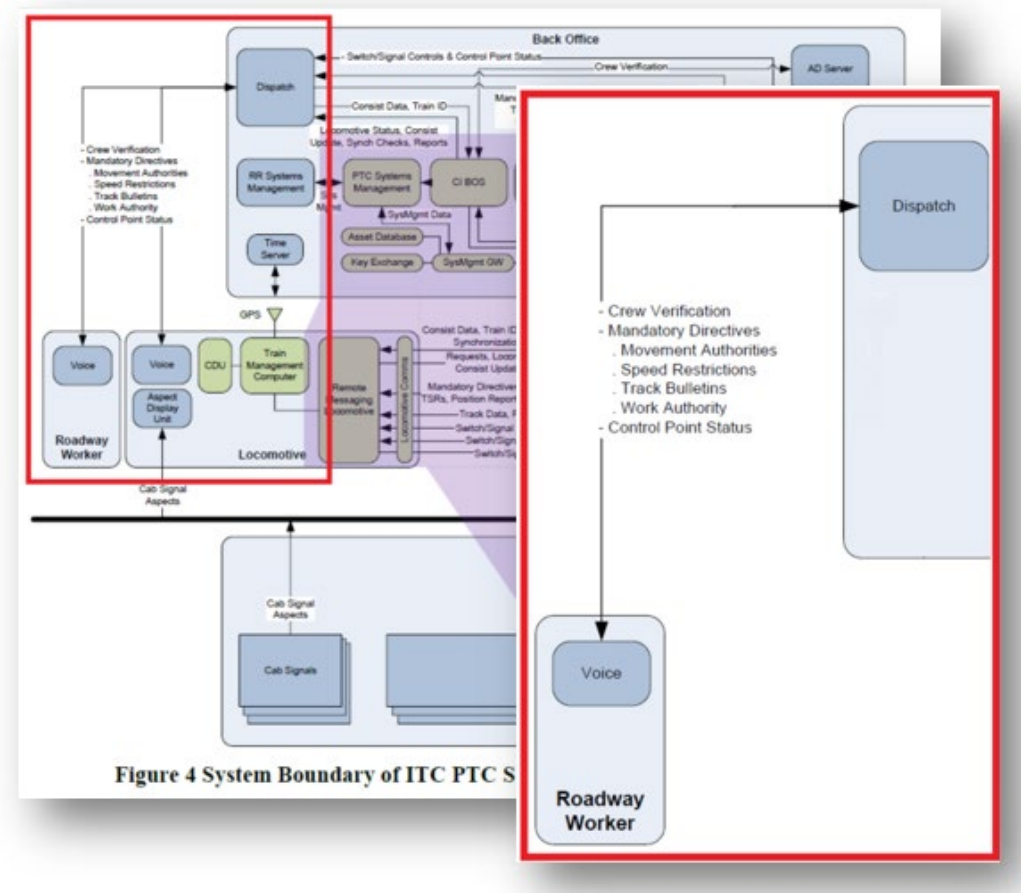

Figure 4 System Boundary of ITC PTC S

164. According to Amtrak's 2019 FY plan, it has implemented or is in the process of implementing an enhanced employee protection system (EEPS) that operates by "provid[ing]

[78] White Paper at 6.
[79] Report at 43.

roadway workers with an authorization code that corresponds to the blocking protection applied in the CETC control system. Removal of the protection by the CETC train dispatcher will require the authorization code to be provided by the roadway worker."[80] In order to provide the railway workers with an authorization code, the system must use a method that has a database containing contact information for each railway worker (i.e., a railway personnel contact database registering, for each railway personnel, an electronic contact address of the railway personnel). Moreover, in order to facilitate communication between the control room and the railway workers working on or near the tracks, the system must include a control apparatus comprising a network interface through which the railway control apparatus communicates via a network.

All Other Amtrak Programs/Projects – Scopes	FY19 Proposed Budget
C.EN.101714. CETC AMTRAK SYSTEM-MOFW ENHANCED EMPLOYEE PROTECTION SYSTEM. Implement a system to enhance roadway worker protection when working on track under foul time or track out of service. The system will provide roadway workers with an authorization code that corresponds to the blocking protection applied in the CETC control system. Removal of the protection by the CETC train dispatcher will require the authorization code be provided by the roadway worker. The system will utilize modifications to the CETC System platform functionality and mobile devices assigned to roadway workers. Deliverables: • EEPS operating practices documentation; • Modification to each CETC System to provide EEPS functionality: - Wilmington CETC (Mid-Atlantic Division) - Boston CETC (NH to Boston, Springfield Line and MBTA Lines) - NY CETC West - PSCC - CETC Hudson-Albany Line • EEPS mobile devices for roadway workers; • Training program for roadway workers and dispatchers; • Operations management plans and procedures to be used after system acceptance;	$224,007

165. Amtrak budgeted $224,007 as FY19 Proposed Budget for implementing an "enhanced employee protection system" that will "provide roadway workers with an authorization code that corresponds to the blocking protection applied in the CETC control

[80] *Northeast Corridor One-Year Implementation Plan Fiscal Year 2019*, NEC COMMISSION 1, 233 (Oct. 2018), https://nec-commission.com/app/uploads/2018/10/NEC-One-Year-Plan-FY19.pdf.

system."[81]

All Other Amtrak Programs/Projects – Scopes	FY19 Proposed Budget
C.EN.101714. CETC AMTRAK SYSTEM-MOFW ENHANCED EMPLOYEE PROTECTION SYSTEM. Implement a system to enhance roadway worker protection when working on track under foul time or track out of service. The system will provide roadway workers with an authorization code that corresponds to the blocking protection applied in the CETC control system. Removal of the protection by the CETC train dispatcher will require the authorization code be provided by the roadway worker. The system will utilize modifications to the CETC System platform functionality and mobile devices assigned to roadway workers. Deliverables: • EEPS operating practices documentation; • Modification to each CETC System to provide EEPS functionality: - Wilmington CETC (Mid-Atlantic Division) - Boston CETC (NH to Boston, Springfield Line and MBTA Lines) - NY CETC West - PSCC - CETC Hudson-Albany Line • EEPS mobile devices for roadway workers; • Training program for roadway workers and dispatchers; • Operations management plans and procedures to be used after system acceptance;	$224,007

166. Collins Aerospace provides that the ARINC RailwayNet^{SM}/AIM system implemented by Amtrak specifies providing back office infrastructure and messaging, including "[s]torage and delivery of crew and consist information, train IDs and clearances."[82] It further specifies enabling ITC PTC interoperability and compliance with I-ETMS systems.[83] Because I-ETMS systems require communication of crew verification and employee authentication, Amtrak maintains electronic contact addresses of the railway field workers from a rail personnel contact database. RailwayNet^{SM} messaging functions also include: "[k]ey exchange server," described as "[s]ecurity keys with data store."[84]

[81] *Northeast Corridor One-Year Implementation Plan Fiscal Year 2019*, NEC COMMISSION 1, 233 (Oct. 2018), https://nec-commission.com/app/uploads/2018/10/NEC-One-Year-Plan-FY19.pdf.
[82] *See* White Paper at 7.
[83] *See* Report at 43.
[84] White Paper at 7.

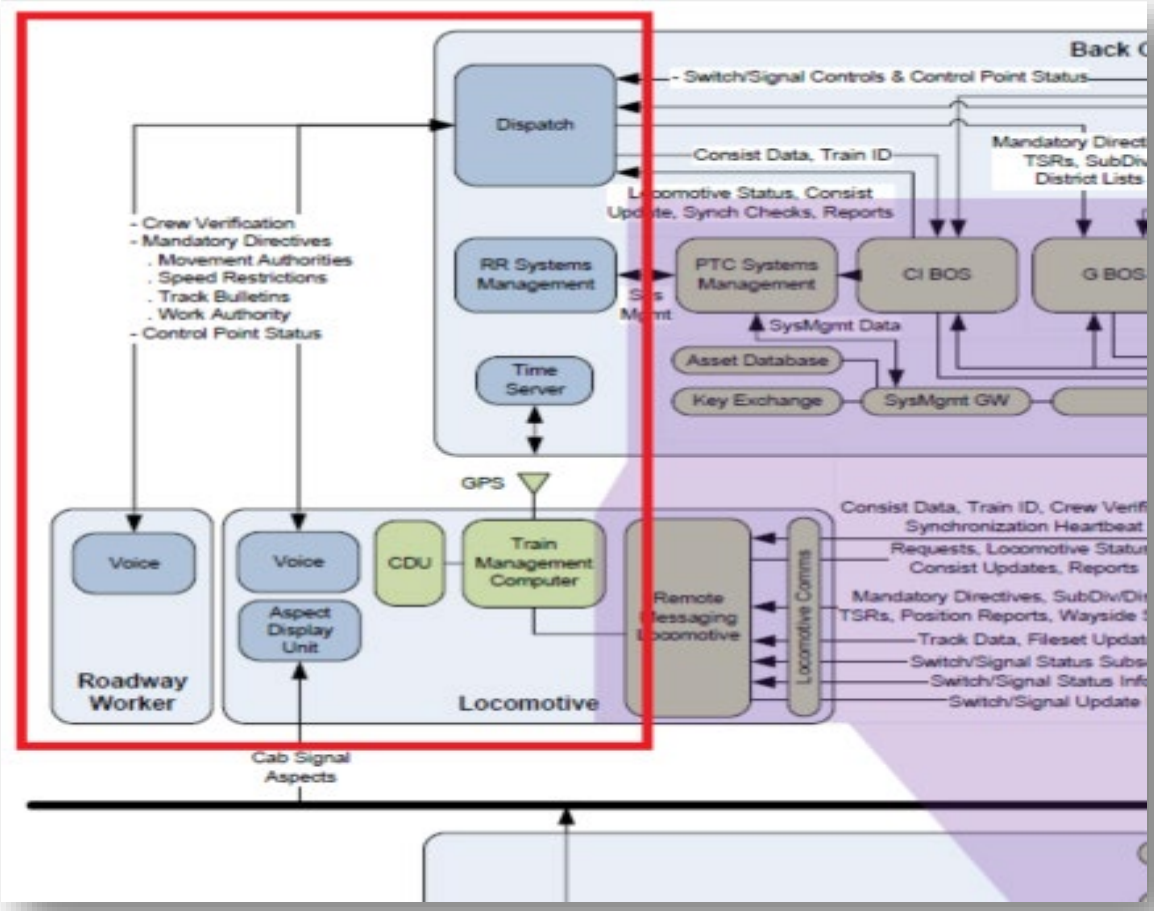

167. Additionally, RailwayNet[SM] serves as a node on a network of Class I railroads, enabling interoperability and electronic communications connectivity to the network.[85] Accordingly, on information and belief, RailwayNet[SM] is configured to retrieve the electronic contact address of the railway field worker from the rail personnel contact database, and transmit the removal code to the electronic contact address of the railway field worker.

168. Accordingly, Amtrak's implementation of Collins Aerospace's ARINC RailwayNet[SM]/AIM system and/or other similar system or method generates "a removal code, determin[es] an electronic contact address of the railway field worker by accessing a rail

[85] *Id.* at 4.

personnel contact database registering, for each railway personnel, electronic contact information of the railway personnel, and transmitting the removal code to the electronic contact address of the railway field worker."

169. Amtrak's implementation of Collins Aerospace's ARINC RailwayNet^{SM}/AIM system and/or other similar system or method permits "the block to said one or more track sections to be removed only upon entry of the removal code by said centralized control operation from the railway traffic control apparatus."

170. Amtrak has indicated that it has implemented or is implementing an enhanced employee protection system (EEPS) that requires the dispatcher to enter the "authorization code" in order to remove the protection (i.e., the foul time) from the track.[86]

All Other Amtrak Programs/Projects – Scopes	FY19 Proposed Budget
C.EN.101714. CETC AMTRAK SYSTEM-MOFW ENHANCED EMPLOYEE PROTECTION SYSTEM. Implement a system to enhance roadway worker protection when working on track under foul time or track out of service. The system will provide roadway workers with an authorization code that corresponds to the blocking protection applied in the CETC control system. Removal of the protection by the CETC train dispatcher will require the authorization code be provided by the roadway worker. The system will utilize modifications to the CETC System platform functionality and mobile devices assigned to roadway workers. Deliverables: • EEPS operating practices documentation; • Modification to each CETC System to provide EEPS functionality: - Wilmington CETC (Mid-Atlantic Division) - Boston CETC (NH to Boston, Springfield Line and MBTA Lines) - NY CETC West - PSCC - CETC Hudson-Albany Line • EEPS mobile devices for roadway workers; • Training program for roadway workers and dispatchers; • Operations management plans and procedures to be used after system acceptance;	$224,007

171. FRA has recognized that systems such as the EEPS system implemented by Amtrak through Collins Aerospace's ARINC RailwayNet^{SM} system complies with applicable regulations (communication-based/processor-based train control technology designed to address

[86] *Northeast Corridor One-Year Implementation Plan Fiscal Year 2019*, NEC COMMISSION 1, 233 (Oct. 2018), https://nec-commission.com/app/uploads/2018/10/NEC-One-Year-Plan-FY19.pdf.

a number of rail safety issues including train-to-train collisions, over-speed derailments, incursions into established work-zone limits, and train movement through a main-line switch that is in an improper position), the "dispatching system will not allow a dispatcher to release controlled track working limits until the RWIC affirmatively indicates via an electronic prompt that he or she is releasing working limits authority."[87]

172. Accordingly, Amtrak's implementation of Collins Aerospace's ARINC RailwayNet^{SM}/AIM system and/or other similar system or method permits "the block to said one or more track sections to be removed only upon entry of the removal code by said centralized control operation from the railway traffic control apparatus."

173. Therefore, Amtrak, through its implementation of Collins Aerospace's ARINC RailwayNet^{SM}/AIM systems and/or other similar system or method has infringed and continues to infringe at least claim 19 of the '835 patent.

B. Infringement Based on Amtrak's Implementation of AMTEC System

174. In violation of 35 U.S.C. § 271(a), Amtrak has infringed and continues to infringe one or more claims of the '835 patent by making, using, offering for sale, selling, and/or importing in or into the United States a system or method covered by the '835 patent, including, but not limited to, at least Amtrak's implementation of its AMTEC system and/or other similar system.[88]

175. Amtrak, through its implementation AMTEC system and/or other similar system or method, infringes at least claim 19 of the '835 patent.

---

[87] *Railroad Workplace Safety; Roadway Worker Protection Miscellaneous Revisions (RRR)*, FRA-2008-0086 (May 27, 2016) at 81, https://www.fra.dot.gov/eLib/Details/L17467 [hereinafter referred to as "RRR"].

[88] Further investigation may reveal that others of Amtrak's products and systems also directly or indirectly infringe at least claim 19 or other claims of the '835 patent.

176. Amtrak's AMTEC system and/or other similar system or method practices a "method for controlling railway access using a railway traffic control apparatus of a centralized railway control system configured for centralized control of traffic of a centrally controllable railway network including plural railways and a plurality of railway traffic interlocks dispersed in said plural railways constituting said railway network."

177. AMTEC stands for Amtrak Train and Electrification Control. AMTEC is Amtrak's proprietary train dispatch system that implements Amtrak's CETC (Centralized Electrification and Train Control). Amtrak uses the AMTEC train dispatching system to improve central train control functionality across Amtrak's tracks.[89]

178. In 2018, Amtrak budgeted $2,405,319 as Northeast Corridor (NEC)-wide expenditure for implementing the SEPTA (Southeastern Pennsylvania Transportation Authority) and Metro North Enhanced Employee Protection System (EEPS) into the Amtrak CETC (Centralized Electrification and Traffic Control) systems on the NEC in October 2017 for the fiscal year 2018.[90]

C.EN.101714. CETC Amtrak System - MOFW Enhanced Employee Protection System (Segment 31). CETC - Enhanced Employee Protection System. This project will implement the SEPTA and Metro North Enhanced Employee Protection System (EEPS) into the Amtrak CETC systems on the NEC.	$2,405,319

179. In February 2019, Amtrak's Five-Year Infrastructure Asset Line Plan for FY

[89] *See Management Trainee Program*, AMTRAK, https://careers.amtrak.com/content/Management-Trainee-Program/?locale=en_US (last visited April 7, 2022) ("Work to support the Amtrak Train and Electrification Control (AMTEC) system… [and] work to support the expansion of the AMTEC train dispatching system to improve train control functionality across the Northeast and Southeast Divisions."); *see also Director, IT, Train Control Systems*, AMTRAK, https://careers.amtrak.com/job/Philadelphia-PA-19104/689937700/ (last visited April 7, 2022) ("Provide leadership, direction, and oversight to the IT group responsible for Amtrak's proprietary train dispatch system (AMTEC – Amtrak Centralized Electrification and Train Control).").

[90] *Northeast Corridor One-Year Implementation Plan*, NEC COMMISSION 1, 16 (Oct. 2017), http://nec-commission.com/app/uploads/2018/03/NEC-One-Year-Implementation-Plan-FY18.pdf.

2019-2024 allocated $3,650,000 for FY 2019 and $5,194,913 for FY 2020 to convert the ARINC system to the AMTEC system and replace the Mid-Atlantic Division ("MAD") and Northeast Division ("NED") CETC primary and backup system with the AMTEC system in the Washington to Boston line.[91]

C.EN.101767 - WAS-BOS CETC ARINC TO AMTEC SOFTWARE The Washington to Boston ARINC to AMTEC Software Upgrade Project will replace the MAD and NED CETC primary and backup system with the AMTEC system. The project will be design, implement and test the new MAD and NED AMTEC systems by in-house PSCC staff as well as maintenance of all system interfaces. Transportation personnel in Wilmington, Boston and Remote locations will be able to transfer their operations to the new system. Power Director and Load Dispatcher operations will continue, either by a newly selected system by Electric Traction (E/T) personnel or by the existing system. The project will provide training on the new system to both Transportation and CETC specialists. Location: NEC wide.	**FAST Act Category:** - Improvements Also Supports: - Normalized Capital Replacement - Strategic Initiatives that improve operational performance, lower cost or improve efficiency - Statutory, regulatory, or other legal mandates	**Construction Program Priority:** N/A Project Benefits: - Safety - SOGR - Resilience

FY2019	FY2020	FY2021	FY2022	FY2023	FY2024	C.EN.101767 Total
$3,650,000	$5,194,913	$0	$0	$0	$0	$8,844,193

180. Six months earlier, in October 2018, Amtrak had estimated a total project cost of $6,593,463—with a fiscal year 2019 planned expenditure of $6,212,732—to convert ARINC system to AMTEC Software and replace the MAD and NED CETC primary and backup system with the AMTEC system in the Washington to Boston line.[92]

[91] *Amtrak Five Year Infrastructure Asset Line Plan FY 2019-2024*, AMTRAK 1, 320, https://www.amtrak.com/content/dam/projects/dotcom/english/public/documents/corporate/businessplanning/Amtrak-Infrastructure-Asset-Line-Plan-FY20-24.pdf (last visited April 7, 2022).
[92] *Northeast Corridor One-Year Implementation Plan Fiscal Year 2019*, NEC COMMISSION 1, 108 (Oct. 2018), https://nec-commission.com/app/uploads/2018/10/NEC-One-Year-Plan-FY19.pdf.

Washington to Boston ARINC to AMTEC Software Upgrade Project. CETC WASHINGTON TO BOSTON. C.EN.101767. FY19 scope includes completion of installation and testing of all software and hardware on the MAD-Harrisburg line and MAD-Mid-Atlantic Divisions. The project anticipates installation and testing on the NED-Springfield Line in FY19. The remaining work that is needed NED-Mainline will be start and complete in Early FY20.	$6,593,463	$6,212,732
FY19 Phases — Schedule		
MAD-Harrisburg line Phase 1 — 10/01/18 - 02/28/19		
MAD- Mid-Atlantic Phase 2 — 01/01/19 - 05/20/19		
NED-Springfield line Phase 3 — 06/01/19 - 10/01/19		
For project details, see Appendix A.		

181. In early 2021, as part of Amtrak's new train control systems, Amtrak announced the "initiative to standardize dispatch systems on the Amtrak-developed AMTEC platform to replace the legacy Collins dispatch system [that] will provide a common dispatch platform for the NEC and the Central division that is more reliable and resilient and will reduce maintenance cost."[93] The EEPS system described in Amtrak's 2019 FY plan has been or will be implemented as part of the AMTEC system upgrade.

182. Accordingly, Amtrak's AMTEC system and/or other similar system or method practices a "method for controlling railway access using a railway traffic control apparatus of a centralized railway control system configured for centralized control of traffic of a centrally controllable railway network including plural railways and a plurality of railway traffic interlocks dispersed in said plural railways constituting said railway network."

183. Amtrak's AMTEC system and/or other similar system or method provides "a user interface of the railway traffic control apparatus, including a block placing part to place a block on one or more specified track sections in any of said plural railways constituting said railway network that is managed by centralized control operation from the railway traffic control

[93] *Five-Year Plans | Service And Asset Line Plans | FY 2021-2026*, AMTRAK 1, 149, https://www.amtrak.com/content/dam/projects/dotcom/english/public/documents/corporate/businessplanning/Amtrak-Service-Line-Asset-Line-Plans-FY21-26.pdf (last visited April 7, 2022).

apparatus, the railway traffic control apparatus controlling, by said centralized control operation, one or more interlocks amongst the plurality of railway traffic interlocks dispersed in said plural railways constituting said railway network, to block railway traffic to the specified track sections and thereby to permit a railway field worker to enter the track sections."

184. Amtrak budgeted $224,007 as FY19 Proposed Budget for implementing an "enhanced employee protection system."

All Other Amtrak Programs/Projects – Scopes	FY19 Proposed Budget
C.EN.101714. CETC AMTRAK SYSTEM-MOFW ENHANCED EMPLOYEE PROTECTION SYSTEM. Implement a system to enhance roadway worker protection when working on track under foul time or track out of service. The system will provide roadway workers with an authorization code that corresponds to the blocking protection applied in the CETC control system. Removal of the protection by the CETC train dispatcher will require the authorization code be provided by the roadway worker. The system will utilize modifications to the CETC System platform functionality and mobile devices assigned to roadway workers. Deliverables: • EEPS operating practices documentation; • Modification to each CETC System to provide EEPS functionality: - Wilmington CETC (Mid-Atlantic Division) - Boston CETC (NH to Boston, Springfield Line and MBTA Lines) - NY CETC West - PSCC - CETC Hudson-Albany Line • EEPS mobile devices for roadway workers; • Training program for roadway workers and dispatchers; • Operations management plans and procedures to be used after system acceptance;	$224,007

185. The portion of Amtrak's AMTEC system that places track sections in "foul time" is a "block placing part" as recited in this claim element. Specifically, FRA regulations 49 C.F.R. § 214.323 defines "foul time" as "a method of establishing working limits on controlled track in which a roadway worker is notified by the train dispatcher or control operator that *no trains will operate within a specific segment of controlled track until the roadway worker reports clear of the track*." Because Amtrak, through its implementation of AMTEC, has the ability to place tracks in foul time, it includes a "a block placing part to place a block on one or more specified track sections in any of said plural railways constituting said railway network that is managed by centralized control operation from the railway traffic control apparatus, the railway traffic

control apparatus controlling, by said centralized control operation, one or more interlocks amongst the plurality of railway traffic interlocks dispersed in said plural railways constituting said railway network, to block railway traffic to the specified track sections and thereby to permit a railway field worker to enter the track sections." Moreover, in order to place a track segment in "foul time," the system must provide a "user interface of the railway traffic control apparatus" to permit the dispatcher to establish the blocking protection.

186. According to Amtrak's 2019 FY plan, it has implemented an enhanced employee protection system (EEPS) that operates by "provid[ing] roadway workers with an authorization code that corresponds to the blocking protection applied in the CETC control system."[94] The 2019 FY plan further specifies purchasing "EEPS mobile devices for roadway workers."[95]

All Other Amtrak Programs/Projects – Scopes	FY19 Proposed Budget
C.EN.101714. CETC AMTRAK SYSTEM-MOFW ENHANCED EMPLOYEE PROTECTION SYSTEM. Implement a system to enhance roadway worker protection when working on track under foul time or track out of service. The system will provide roadway workers with an authorization code that corresponds to the blocking protection applied in the CETC control system. Removal of the protection by the CETC train dispatcher will require the authorization code be provided by the roadway worker. The system will utilize modifications to the CETC System platform functionality and mobile devices assigned to roadway workers. Deliverables: • EEPS operating practices documentation; • Modification to each CETC System to provide EEPS functionality: - Wilmington CETC (Mid-Atlantic Division) - Boston CETC (NH to Boston, Springfield Line and MBTA Lines) - NY CETC West - PSCC - CETC Hudson-Albany Line • EEPS mobile devices for roadway workers; • Training program for roadway workers and dispatchers; • Operations management plans and procedures to be used after system acceptance;	$224,007

187. In order to provide the railway workers with an authorization code to their EEPS mobile devices, Amtrak's AMTEC system must have a database containing contact information for each railway worker (i.e., a rail personnel contact database registering, for each railway personnel, an electronic contact address of the railway personnel). Moreover, in order to

[94] *2019 NEC One-Year Plan* at 233.
[95] *Id.*

facilitate communication between the control room and the railway workers working on or near the tracks, Amtrak's AMTEC system must include a control apparatus comprising a network interface through which the railway control apparatus communicates via a network.

188. AMTEC is a CETC system which, by definition, is configured for centralized control of traffic of a centrally controllable railway network including plural railways and a plurality of railway traffic interlocks dispersed in the plural railways and controls access to the railway tracks.[96] Further, the AMTEC system can place tracks in "foul time:"

All Other Amtrak Programs/Projects – Scopes	FY19 Proposed Budget
C.EN.101714. CETC AMTRAK SYSTEM-MOFW ENHANCED EMPLOYEE PROTECTION SYSTEM. Implement a system to enhance roadway worker protection when working on track under foul time or track out of service. The system will provide roadway workers with an authorization code that corresponds to the blocking protection applied in the CETC control system. Removal of the protection by the CETC train dispatcher will require the authorization code be provided by the roadway worker. The system will utilize modifications to the CETC System platform functionality and mobile devices assigned to roadway workers. Deliverables: • EEPS operating practices documentation; • Modification to each CETC System to provide EEPS functionality: - Wilmington CETC (Mid-Atlantic Division) - Boston CETC (NH to Boston, Springfield Line and MBTA Lines) - NY CETC West - PSCC - CETC Hudson-Albany Line • EEPS mobile devices for roadway workers; • Training program for roadway workers and dispatchers; • Operations management plans and procedures to be used after system acceptance;	$224,007

189. Foul time is defined as "a method of establishing working limits on controlled track in which a roadway worker is notified by the train dispatcher or control operator that no trains will operate within a specific segment of controlled track until the roadway worker reports clear of the track." 49 C.F.R. Part 214.7. The "specified segments" referred to in the rule are the "plural railways" referred to in this claim element.

190. Amtrak budgeted an additional $224,007 as FY19 Proposed Budget for

[96] *See A Guide to Key Railroad Terminology for the Northeast Corridor*, AMTRAK, https://media.amtrak.com/wp-content/uploads/2017/07/NEC-Terms-primer-v1.pdf (last visited April 3, 2022) ("Dispatchers use computerized Centralized Traffic & Electrification Control (CETC) systems to [centrally] control train movement over most of the NEC.").

implementing a system to enhance railway worker protection:

All Other Amtrak Programs/Projects – Scopes	FY19 Proposed Budget
C.EN.101714. CETC AMTRAK SYSTEM-MOFW ENHANCED EMPLOYEE PROTECTION SYSTEM. Implement a system to enhance roadway worker protection when working on track under foul time or track out of service. The system will provide roadway workers with an authorization code that corresponds to the blocking protection applied in the CETC control system. Removal of the protection by the CETC train dispatcher will require the authorization code be provided by the roadway worker. The system will utilize modifications to the CETC System platform functionality and mobile devices assigned to roadway workers. Deliverables: • EEPS operating practices documentation; • Modification to each CETC System to provide EEPS functionality: - Wilmington CETC (Mid-Atlantic Division) - Boston CETC (NH to Boston, Springfield Line and MBTA Lines) - NY CETC West - PSCC - CETC Hudson-Albany Line • EEPS mobile devices for roadway workers; • Training program for roadway workers and dispatchers; • Operations management plans and procedures to be used after system acceptance;	$224,007

191. The EEPS mobile devices for railway workers are part of the deliverables that Amtrak has budgeted an additional $224,007 as FY19 Proposed Budget for implementing a system to enhance railway worker protection when working on track under foul time or track out of service. Moreover, with the advent in mobile technology, these EEPS mobile devices provide a user interface to display information received from the railway control apparatus and to permit the railway field worker to respond to prompts displayed thereon.[97]

192. According to Amtrak's 2019 FY plan, it has implemented an enhanced employee protection system (EEPS) that operates by "provid[ing] roadway workers with an authorization code that corresponds to the ***blocking protection*** applied in the CETC control system."[98] The referenced "blocking protection applied in the CETC control system [AMTEC]" is a reference to the claimed "block placing part."

[97] *See 2019 NEC One-Year Plan* at 233.
[98] *2019 NEC One-Year Plan* at 233 (emphasis added).

All Other Amtrak Programs/Projects – Scopes	FY19 Proposed Budget
C.EN.101714. CETC AMTRAK SYSTEM-MOFW ENHANCED EMPLOYEE PROTECTION SYSTEM. Implement a system to enhance roadway worker protection when working on track under foul time or track out of service. The system will provide roadway workers with an authorization code that corresponds to the blocking protection applied in the CETC control system. Removal of the protection by the CETC train dispatcher will require the authorization code be provided by the roadway worker. The system will utilize modifications to the CETC System platform functionality and mobile devices assigned to roadway workers. Deliverables: • EEPS operating practices documentation; • Modification to each CETC System to provide EEPS functionality: - Wilmington CETC (Mid-Atlantic Division) - Boston CETC (NH to Boston, Springfield Line and MBTA Lines) - NY CETC West - PSCC - CETC Hudson-Albany Line • EEPS mobile devices for roadway workers; • Training program for roadway workers and dispatchers; • Operations management plans and procedures to be used after system acceptance;	$224,007

193. The AMTEC system can place tracks in "foul time" which is defined as "a method of establishing working limits on controlled track in which a roadway worker is notified by the train dispatcher or control operator that no trains will operate within a specific segment of controlled track until the roadway worker reports clear of the track." 49 C.F.R. Part 214.7. The "specified segments" referred to in the rule are the "plural railways" referred to in this claim element. In order to provide "blocking protection" to the railway workers and place tracks in "foul time," the system must have a block placing part to place a block on one or more specified track sections in any of said plural railways constituting said railway network.

194. Accordingly, Amtrak's AMTEC system and/or other similar system or method provides "a user interface of the railway traffic control apparatus, including a block placing part to place a block on one or more specified track sections in any of said plural railways constituting said railway network that is managed by centralized control operation from the railway traffic control apparatus, the railway traffic control apparatus controlling, by said centralized control operation, one or more interlocks amongst the plurality of railway traffic interlocks dispersed in said plural railways constituting said railway network, to block railway traffic to the specified track sections and thereby to permit a railway field worker to enter the

track sections."

195. Amtrak's AMTEC system and/or other similar system or method generates "a removal code, determin[es] an electronic contact address of the railway field worker by accessing a rail personnel contact database registering, for each railway personnel, electronic contact information of the railway personnel, and transmit[s] the removal code to the electronic contact address of the railway field worker."

196. Amtrak's AMTEC system implements an enhanced employee protection system (EEPS) that operates by "provid[ing] roadway workers with an authorization code that corresponds to the blocking protection applied in the CETC control system."[99] In order to provide the railway workers with an authorization code, Amtrak's AMTEC system must first generate the code. Amtrak's AMTEC system must also include a database containing contact information for each railway worker (i.e., a railway personnel contact database registering, for each railway personnel, an electronic contact address of the railway personnel) and retrieve the electronic contact address for the railway worker from the electronic contact database in order to send the generated code to the railway field worker.

[99] *2019 NEC One-Year Plan* at 233.

All Other Amtrak Programs/Projects – Scopes	FY19 Proposed Budget
C.EN.101714. CETC AMTRAK SYSTEM-MOFW ENHANCED EMPLOYEE PROTECTION SYSTEM. Implement a system to enhance roadway worker protection when working on track under foul time or track out of service. The system will provide roadway workers with an authorization code that corresponds to the blocking protection applied in the CETC control system. Removal of the protection by the CETC train dispatcher will require the authorization code be provided by the roadway worker. The system will utilize modifications to the CETC System platform functionality and mobile devices assigned to roadway workers. Deliverables: • EEPS operating practices documentation; • Modification to each CETC System to provide EEPS functionality: - Wilmington CETC (Mid-Atlantic Division) - Boston CETC (NH to Boston, Springfield Line and MBTA Lines) - NY CETC West - PSCC - CETC Hudson-Albany Line • EEPS mobile devices for roadway workers; • Training program for roadway workers and dispatchers; • Operations management plans and procedures to be used after system acceptance;	$224,007

197. Additionally, in order to provide railway workers with an authorization code that corresponds to the blocking protection applied in the CETC control system, the AMTEC system must generate the authorization code . Further, the *2019 NEC One-year-Plan* specifically notes that the AMTEC system "will provide roadway workers with an authorization code" which demonstrates that the AMTEC system "transmit[s] the removal code to the electronic contact address of the railway field worker."[100]

198. Accordingly, AMTEC system and/or other similar system or method generates "a removal code, determining an electronic contact address of the railway field worker by accessing a rail personnel contact database registering, for each railway personnel, electronic contact information of the railway personnel, and transmitting the removal code to the electronic contact address of the railway field worker."

199. Amtrak's AMTEC system and/or other similar system or method permits "the block to said one or more track sections to be removed only upon entry of the removal by said centralized control operation from the railway traffic control apparatus."

200. According to Amtrak's 2019 FY plan, it has implemented an enhanced employee

[100] *Id.*

protection system (EEPS) that operates by "provid[ing] roadway workers with an authorization code that corresponds to the blocking protection applied in the CETC control system."[101] The system notes that "removal of the protection by the CETC train dispatcher will require the authorization code be provided by the roadway worker."[102]

All Other Amtrak Programs/Projects – Scopes	FY19 Proposed Budget
C.EN.101714. CETC AMTRAK SYSTEM-MOFW ENHANCED EMPLOYEE PROTECTION SYSTEM. Implement a system to enhance roadway worker protection when working on track under foul time or track out of service. The system will provide roadway workers with an authorization code that corresponds to the blocking protection applied in the CETC control system. Removal of the protection by the CETC train dispatcher will require the authorization code be provided by the roadway worker. The system will utilize modifications to the CETC System platform functionality and mobile devices assigned to roadway workers. Deliverables: • EEPS operating practices documentation; • Modification to each CETC System to provide EEPS functionality: - Wilmington CETC (Mid-Atlantic Division) - Boston CETC (NH to Boston, Springfield Line and MBTA Lines) - NY CETC West - PSCC - CETC Hudson-Albany Line • EEPS mobile devices for roadway workers; • Training program for roadway workers and dispatchers; • Operations management plans and procedures to be used after system acceptance;	$224,007

201. In order to ensure that removal of the protection by the CETC train dispatcher is not done prematurely, the AMTEC system requires the authorization code provided by the railway worker; the AMTEC system will then remove the block only upon entry of the removal code from the railway worker.

202. Accordingly, AMTEC system and/or other similar system or method permits "the block to said one or more track sections to be removed only upon entry of the removal code by said centralized control operation from the railway traffic control apparatus."

***

203. As direct and proximate result of Amtrak's infringement of the '835 patent, Railware has been injured and has been caused significant harm and financial damages.

---

[101] *2019 NEC One-Year Plan* at 233.
[102] *Id.*

204. On information and belief, Amtrak has also induced and continues to induce infringement of at least claim 19 of the ’835 patent in violation of 35 U.S.C. § 271(b).

205. Amtrak induces its users, and/or developers of its systems to infringe at least claim 19 of the ’835 patent, and does so with the specific intent, by providing instructions, directions, information, and/or knowledge on how to use its systems and/or incorporate its systems into other products (including both the Collins Aerospace RailwayNet/AIM systems and the AMTEC systems or similar systems or methods). For example, Amtrak provides a “Management Trainee Program” through which trainees “work to support the Amtrak Train and Electrification Control (AMTEC) system by updating the track model software design and configuration work supporting new interlocking construction and reconfiguration of existing interlockings, as well as similar technical work to support the expansion of the AMTEC train dispatching system to improve train control functionality across the Northeast and Southeast Divisions.”[103]

206. As a direct and proximate result of Amtrak’s infringement of the ’835 patent, Railware has been injured and has been caused significant harm and financial damages.

207. Upon information and belief, Amtrak, without Railware’s permission, has been and is presently infringing at least claim 19 of the ’835 patent in violation of 35 U.S.C. § 271(c), by selling or offering to sell an apparatus for use in practicing the ’835 patent that is a material part of the invention to its customers, purchasers, users, and/or developers.

208. The apparatuses and systems sold or offered for sale by Amtrak have no substantial noninfringing uses. Further, they are not staple articles of commerce and constitute a

[103] https://careers.amtrak.com/content/Management-Trainee-Program/?locale=en_US (last visited May 6, 2022).

material part of the invention. Thus, Amtrak knew or should have known that the combination for which their apparatuses and systems were made was protected by the ’835 patent.

209. As such, Amtrak has contributorily infringed and continue to infringe the ’835 patent, as set forth herein, knowing that the apparatuses or systems would be made or adapted for use in an infringing manner.

210. To the extent the marking requirements of 35 U.S.C. § 287 apply, Amtrak has had constructive knowledge of the ’835 patent at least since October 21, 2020. Amtrak’s continued infringement on or after this date is in spite of the objectively high likelihood that its activities constitute infringement of a valid patent, and this risk was either known or so obvious that it should have been known to Amtrak. Thus, Amtrak’s continued infringement at least as of October 21, 2020, or as of the filing of this Complaint is willful and deliberate.

211. Railware has suffered and continues to suffer damages and irreparable harm as a result of Amtrak’s past and ongoing infringement. Unless and until Amtrak’s infringement is enjoined, Railware will continue to be damaged and irreparably harmed.

212. Railware is entitled to all remedies at law and equity including, but not limited to, an injunction against Amtrak’s infringement of the ’835 patent pursuant to 35 U.S.C. § 283.

213. Railware is entitled to damages for Amtrak’s infringement of the ’835 patent including, but not limited to, damages pursuant to 35 U.S.C. §§ 284 and 285.

THIRD CLAIM FOR RELIEF

(Infringement of the ’115 patent)

214. Railware repeats and incorporates by reference all prior allegations of this Complaint as if fully set forth herein.

215. Railware is the owner by assignment of all rights, title, and interest in and to the

’115 patent.

216. The ’115 patent is valid and enforceable.

217. Claim 20 of the ’115 patent recites:

> A railway control apparatus for centralized control of a centrally controllable railway network including plural railways and a plurality of railway interlocks dispersed in said plural railways, comprising:
>
> > a processor for controlling a plurality of track sections in the railway network, wherein each track section is associated with a corresponding interlock and is disposed in any of said plural railways of said railway network that is managed by centralized control operation from the railway control apparatus, the processor controlling, by said centralized control operation, one or more interlocks amongst the plurality of railway interlocks dispersed in said plural railways of said railway network, to block railway traffic to one or more specified track sections; and
> >
> > a memory device storing computer-executable instructions, wherein execution of the computer-executable instructions by the processor causes the railway control apparatus to:
> >
> > > receive a selection of at least one track section amongst the plurality of track sections;
> > >
> > > transmit a block signal to the corresponding interlock associated with the at least one selected track section, to place a block on the selected track section by said centralized control operation from the railway control apparatus;
> > >
> > > generate a secret code associated with the at least one selected track section; and
> > >
> > > transmit the secret code to a remote user terminal.

A. Infringement Based on Amtrak’s Implementation of Collins Aerospace’s ARINC RailwayNet^{SM} System/AIM System

218. In violation of 35 U.S.C. § 271(a), Amtrak has infringed and continues to infringe one or more claims of the ’115 patent by making, using, offering for sale, selling, and/or importing in or into the United States a system or method covered by the ’115 patent, including, but not limited to, at least Amtrak’s implementation and/or use of Collins Aerospace’s ARINC

RailwayNet^{SM} system/AIM system and/or other similar system.[104]

219. Amtrak, through its implementation and/or use of Collins Aerospace's ARINC RailwayNet^{SM} system/AIM system and/or other similar system, infringes at least claim 20 of the '115 patent.

220. Amtrak's implementation of Collins Aerospace's ARINC RailwayNet^{SM} system/AIM system and/or other similar system is a "railway control apparatus for centralized control of a centrally controllable railway network including plural railways and a plurality of railway interlocks dispersed in said plural railways."

221. Amtrak owns and/or operates a number of dispatch centers along the Northeast Corridor (NEC) spine including in Boston, MA, New York, NY (Penn Station), and Philadelphia, PA.[105] Dispatching centers are centralized railway control systems using methods to control access to railway tracks configured for centralized control of a centrally controllable railway network including plural railways and a plurality of railway interlocks dispersed in said plural railways.

222. Collins Aerospace advertises that its AIM system provides "centralized traffic control," "train monitoring and control," "automatic route setting/automatic routing," "automatic traffic regulation," and "bulletins, authorities," and "restrictions management."[106]

---

[104] Further investigation may reveal that others of Amtrak's products and systems also directly or indirectly infringe at least claim 20 or other claims of the '115 patent.
[105] *See CETC Dispatch*, RAILROAD.NET, https://railroad.net/cetc-dispatch-t66499-15.html (last visited Apr. 04, 2022); s*ee also Supra* ¶¶ 22–29.
[106] *Intelligence-Based Rail Solutions*, Collins Aerospace, https://www.collinsaerospace.com/-/media/project/collinsaerospace/collinsaerospace-website/product-assets/marketing/r/rail/arinc-rail-solutions-for-passengers.pdf?rev=e7e5ddbff2de4154ba265f03e27f14d3.

Centralized Traffic Control and SCADA

Collins designs and integrates state-of-the-art rail control solutions using our ARINC Advanced Information Management (AIM®) platform. AIM serves as an end-to-end solution for all rail control requirements, including SCADA, Centralized Traffic Control, Positive Train Control (PTC) and control center integration. Highly flexible and feature-rich, AIM enables railroads to maximize operational efficiency, cost-effectiveness and safety, all while providing an environment protected by the latest tools and techniques in cybersecurity.

KEY AREAS OF EXPERTISE

- Train monitoring and control
- Automatic train tracking
- Automatic route setting/ automatic routing
- Automatic traffic regulation and schedule deviation
- Schedule management
- Integrated yard management
- Bulletins, authorities and restrictions management
- Employee in Charge (EIC) terminals
- Emergency Operating Procedures (EOP)
- Power planning
- Playback and simulation
- Data acquisition
- Interface integration

223. Amtrak implemented the Collins Aerospace-developed RailwayNet^{SM} as a SaaS and/or IaaS—a software/infrastructure as a service—product that provides "full-featured network management and infrastructure, hardware, network, operating systems, and applications for fault, performance, security and configuration management."[107] Amtrak has further implemented Collins Aerospace-developed AIM software.

224. According to Collins Aerospace, RailwayNet^{SM} helps facilitate the increases in safety and reliability that PTC provides.[108]

---

[107] ROCKWELL COLLINS INC., ARINC RAILWAYNET WHITE PAPER 6 (2016), https://www.rockwellcollins.com/-/media/Files/Unsecure/Services-And-Support/Information-Management/ARINC-Rail/RailwayNet/ARINC-Rail_RailwayNet_white-paper.ashx [hereinafter referred to as "White Paper"]; *see also Supra* ¶¶ 33–41.

[108] *Amtrak signs nationwide contract for Rockwell Collins' ARINC RailwayNet^{SM} Positive Train Control service*, COLLINS AEROSPACE (Sep. 6, 2017), https://www.collinsaerospace.com/-

225. Collins Aerospace advertises that RailwayNet^{SM}, which Amtrak uses, improves rail safety. "This system refers to communication-based/processor-based train control technology designed to address a number of rail safety issues, including train-to-train collisions, over-speed derailments, incursions into established work-zone limits, and train movement through a main-line switch that is in an improper position."[109]

226. In 2017, Amtrak signed an agreement with Rockwell Collins to implement the company's ARINC RailwayNet^{SM} service on approximately 310 Amtrak locomotives operating across the United States. RailwayNet^{SM} was implemented nationwide on Amtrak routes, where it operates its trains over other railroad companies' tracks. Under the agreement, Rockwell Collins initialized Amtrak's fleet enabling its trains to run as "tenants" on 19 different host railroads, including Class 1, commuter and freight tracks. As explained below, ARINC RailwayNet^{SM} is a hosted network, messaging and application platform, designed to assist operators in meeting the requirements mandated by the Rail Safety Improvement Act of 2008 (the "Act"). The Act directs

/media/project/collinsaerospace/collinsaerospace-website/product-assets/files/public/services-and-support/information-management/arinc-rail/amtrak-and-railwaynet-press-release.pdf.

[109] White Paper at 3.

the Federal Railroad Administration (FRA) to mandate new regulations focused on railroad safety. When used in conjunction with the operator's PTC infrastructure, RailwayNet^{SM} helps facilitate the increases in safety and reliability that PTC provides.[110]

227. The "ARINC RailwayNet^{SM} integrations server and software provides connectivity between the railroad IT systems and the hosted back-office components."[111] The integration server provides an interface with various system components.

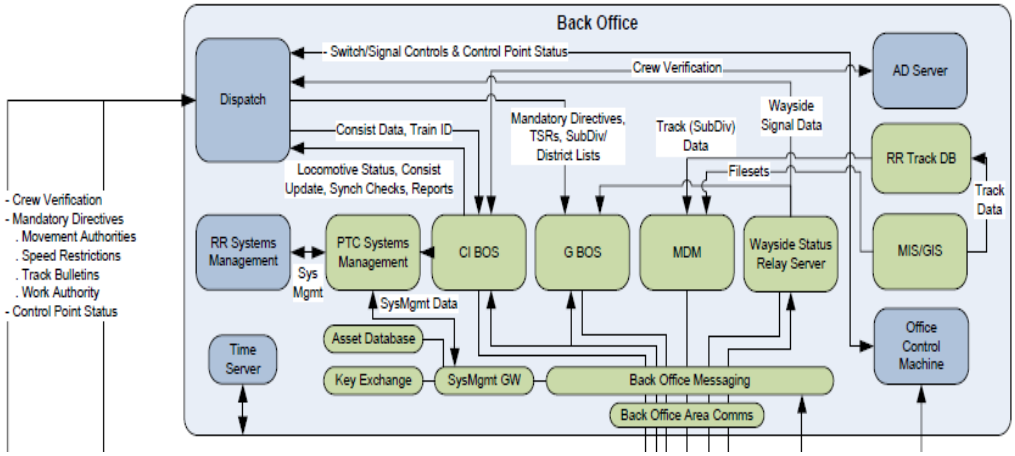

[110] *Amtrak signs nationwide contract for Rockwell Collins' ARINC RailwayNet^{SM} Positive Train Control service*, COLLINS AEROSPACE (Sep. 6, 2017), https://www.collinsaerospace.com/-/media/project/collinsaerospace/collinsaerospace-website/product-assets/files/public/services-and-support/information-management/arinc-rail/amtrak-and-railwaynet-press-release.pdf.
[111] *See* White Paper at 8 (illustrating "AIM® integration server").

AIM® integration server

The ARINC RailwayNet integrations server and software provides connectivity between the railroad IT systems and the hosted back-office components. The functions of this application include:

- Interface with customer's IT gateway
- Interface with back office
- Manage crew authentication through the customer's IT gateway
- Functions to assign train ID to trains based on the clearance number
- Functions to manage train consist through the customer's IT gateway
- Functions to track, display, and store events and alarms

Centralized Traffic Control and SCADA

Collins designs and integrates state-of-the-art rail control solutions using our ARINC Advanced Information Management (AIM®) platform. AIM serves as an end-to-end solution for all rail control requirements, including SCADA, Centralized Traffic Control, Positive Train Control (PTC) and control center integration. Highly flexible and feature-rich, AIM enables railroads to maximize operational efficiency, cost-effectiveness and safety, all while providing an environment protected by the latest tools and techniques in cybersecurity.

KEY AREAS OF EXPERTISE

- Train monitoring and control
- Automatic train tracking
- Automatic route setting/ automatic routing
- Automatic traffic regulation and schedule deviation
- Schedule management
- Integrated yard management
- Bulletins, authorities and restrictions management
- Employee in Charge (EIC) terminals
- Emergency Operating Procedures (EOP)
- Power planning
- Playback and simulation
- Data acquisition
- Interface integration

228. Collins Aerospace's ARINC RailwayNet^{SM}/AIM system and/or other similar system, implemented by Amtrak, provides the network connections and office applications required to exchange critical information among Class I railroads and their partner short line commuter railroads. It is available on a subscription basis as hosted SaaS (software as a service) and IaaS (infrastructure as a service) solutions, and PTC messaging from the back office to the locomotive through VHF, cellular, and Wi-Fi is also available.[112]

229. The ARINC RailwayNet^{SM}/AIM system, as implemented by Amtrak, further controls plural railways and a plurality of railway traffic interlocks. Specifically, Centralized Train Control systems, such as that employed by Amtrak and its implementation of ARINC RailwayNet^{SM}/AIM and/or other similar system "consists of a centralized train dispatcher's

[112] *New from Rockwell Collins: Shared-network PTC platform*, RAILWAY AGE 14 (July 2016), https://issuu.com/railwayage/docs/july_2016_railway_age.

office that controls railroad interlocking and traffic flows in portions of the rail system designated as CTC territory."[113]

230. Collins Aerospace implemented the ARINC RailwayNet^{SM}/AIM system and/or other similar system—a hosted network, messaging and application platform as amended—on Amtrak's 19 different railroads, including commuter and freight routes that host Amtrak services.

231. Accordingly, Amtrak's implementation of Collins Aerospace's ARINC RailwayNet^{SM}/AIM system and/or other similar system is a "railway control apparatus for centralized control of a centrally controllable railway network including plural railways and a plurality of railway interlocks dispersed in said plural railways."

232. Amtrak's implementation of Collins Aerospace's ARINC RailwayNet^{SM}/AIM system and/or other similar system includes "a processor for controlling a plurality of track sections in the railway network, wherein each track section is associated with a corresponding interlock and is disposed in any of said plural railways of said railway network that is managed by centralized control operation from the railway control apparatus, the processor controlling, by said centralized control operation, one or more interlocks amongst the plurality of railway interlocks dispersed in said plural railways of said railway network, to block railway traffic to one or more specified track sections."

233. Collins Aerospace advertises that RailwayNet^{SM}, which Amtrak uses, improves rail safety. "This system refers to **communication-based/processor-based** train control technology designed to address a number of rail safety issues, including train-to-train collisions, over-speed derailments, incursions into established work-zone limits, and train movement

[113] *CTC*, WIKIPEDIA, https://en.wikipedia.org/wiki/Centralized_traffic_control.

through a main-line switch that is in an improper position."[114]

234. The "ARINC RailwayNet[SM] integrations server and software provides connectivity between the railroad IT systems and the hosted back-office components."[115] The integration server provides an interface with various system components.

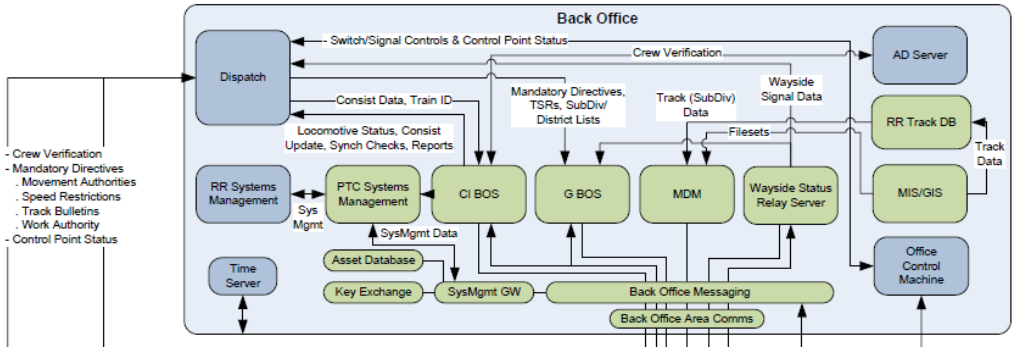

AIM® integration server

The ARINC RailwayNet integrations server and software provides connectivity between the railroad IT systems and the hosted back-office components. The functions of this application include:

- Interface with customer's IT gateway
- Interface with back office
- Manage crew authentication through the customer's IT gateway
- Functions to assign train ID to trains based on the clearance number
- Functions to manage train consist through the customer's IT gateway
- Functions to track, display, and store events and alarms

Centralized Traffic Control and SCADA

Collins designs and integrates state-of-the-art rail control solutions using our ARINC Advanced Information Management (AIM®) platform. AIM serves as an end-to-end solution for all rail control requirements, including SCADA, Centralized Traffic Control, Positive Train Control (PTC) and control center integration. Highly flexible and feature-rich, AIM enables railroads to maximize operational efficiency, cost-effectiveness and safety, all while providing an environment protected by the latest tools and techniques in cybersecurity.

KEY AREAS OF EXPERTISE

- Train monitoring and control
- Automatic train tracking
- Automatic route setting/ automatic routing
- Automatic traffic regulation and schedule deviation
- Schedule management
- Integrated yard management
- Bulletins, authorities and restrictions management
- Employee in Charge (EIC) terminals
- Emergency Operating Procedures (EOP)
- Power planning
- Playback and simulation
- Data acquisition
- Interface integration

[114] White Paper at 3 (emphasis added).
[115] *See* White Paper at 8 (illustrating "AIM® integration server").

235. Collins Aerospace's ARINC RailwayNet^{SM}/AIM system and/or other similar system, implemented by Amtrak, provides the network connections and office applications required to exchange critical information among Class I railroads and their partner short line commuter railroads. It is available on a subscription basis as hosted SaaS (software as a service) and IaaS (infrastructure as a service) solutions, and PTC messaging from the back office to the locomotive through VHF, cellular, and Wi-Fi is also available.[116]

236. The ARINC RailwayNet^{SM}/AIM system, as implemented by Amtrak, further controls plural railways and a plurality of railway traffic interlocks. Specifically, Centralized Train Control systems, such as that employed by Amtrak and its implementation of ARINC RailwayNet^{SM}/AIM and/or other similar system "consists of a centralized train dispatcher's office that controls railroad interlocking and traffic flows in portions of the rail system designated as CTC territory."[117]

237. Collins Aerospace implemented the ARINC RailwayNet^{SM}/AIM system and/or other similar system service—a hosted network, messaging and application platform as amended—on Amtrak's 19 different railroads, including commuter and freight routes that host Amtrak services.

238. Amtrak budgeted an additional $224,007 as FY19 Proposed Budget for implementing a system to enhance railway worker protection when working on track under foul time or track out of service. The system will provide railway workers with an authorization code that corresponds to the blocking protection applied in the CETC control system. Removal of the

---

[116] *New from Rockwell Collins: Shared-network PTC platform*, RAILWAY AGE 14 (July 2016), https://issuu.com/railwayage/docs/july_2016_railway_age.
[117] *CTC*, WIKIPEDIA, https://en.wikipedia.org/wiki/Centralized_traffic_control.

protection by the CETC train dispatcher will require the authorization code be provided by the railway worker. The system will utilize modifications to the CETC System platform functionality and mobile devices assigned to railway workers. The deliverable included modification to each CETC System to provide EEPS functionality in at least Wilmington CETC (Mid-Atlantic Division); Boston CETC (NH to Boston, Springfield Line and MBTA Lines); NY CETC West; PSCC (Pennsylvania Station Central Control); and CETC Hudson-Albany Line**.** The deliverables also included EEPS mobile devices for railway workers; EEPS operating practices documentation; training program for railway workers and dispatchers; and operations management plans and procedures to be used after system acceptance.[118]

239. Amtrak budgeted $224,007 as FY19 Proposed Budget for implementing an "enhanced employee protection system."

All Other Amtrak Programs/Projects – Scopes	FY19 Proposed Budget
C.EN.101714. CETC AMTRAK SYSTEM-MOFW ENHANCED EMPLOYEE PROTECTION SYSTEM. Implement a system to enhance roadway worker protection when working on track under foul time or track out of service. The system will provide roadway workers with an authorization code that corresponds to the blocking protection applied in the CETC control system. Removal of the protection by the CETC train dispatcher will require the authorization code be provided by the roadway worker. The system will utilize modifications to the CETC System platform functionality and mobile devices assigned to roadway workers. Deliverables: • EEPS operating practices documentation; • Modification to each CETC System to provide EEPS functionality: - Wilmington CETC (Mid-Atlantic Division) - Boston CETC (NH to Boston, Springfield Line and MBTA Lines) - NY CETC West - PSCC - CETC Hudson-Albany Line • EEPS mobile devices for roadway workers; • Training program for roadway workers and dispatchers; • Operations management plans and procedures to be used after system acceptance;	$224,007

240. Collins Aerospace's ARINC RailwayNet^{SM}AIM system, implemented by Amtrak, that places track sections in "foul time" is an example of a "processor controlling, by said

[118] *Northeast Corridor One-Year Implementation Plan Fiscal Year 2019*, NEC COMMISSION 1, 233 (Oct. 2018), https://nec-commission.com/app/uploads/2018/10/NEC-One-Year-Plan-FY19.pdf.

centralized control operation one or more interlocks dispersed in said plural railways of said railway network, to block railway traffic to one or more specified track sections" as recited in this claim element. Specifically, FRA regulations 49 C.F.R. § 214.323 defines "foul time" as "a method of establishing working limits on controlled track in which a roadway worker is notified by the train dispatcher or control operator that *no trains will operate within a specific segment of controlled track until the roadway worker reports clear of the track*." Because Amtrak, through its implementation of ARINC RailwayNet^{SM}/AIM, has the ability to place tracks in foul time, it includes the capability to "block railway traffic to one or more specified track sections." Moreover, in order to place a track segment in "foul time," the system must contain "a processor for controlling a plurality of track sections in the railway network, wherein each track section is associated with a corresponding interlock and is disposed in any of said plural railways of said railway network that is managed by centralized control operation from the railway control apparatus, the processor controlling, by said centralized control operation, one or more interlocks amongst the plurality of railway interlocks dispersed in said plural railways of said railway network" to permit the dispatcher to establish the blocking protection.

241. Collins Aerospace advertises that its AIM system provides "train monitoring and control," automatic route setting/automatic routing," "automatic traffic regulation," and "bulletins, authorities, and restrictions management."[119] One or more of these functionalities encompasses the claimed "block railway traffic" part.

[119] *Intelligence-Based Rail Solutions*, Collins Aerospace, https://www.collinsaerospace.com/-/media/project/collinsaerospace/collinsaerospace-website/product-assets/marketing/r/rail/arinc-rail-solutions-for-passengers.pdf?rev=e7e5ddbff2de4154ba265f03e27f14d3.

Centralized Traffic Control and SCADA

Collins designs and integrates state-of-the-art rail control solutions using our ARINC Advanced Information Management (AIM®) platform. AIM serves as an end-to-end solution for all rail control requirements, including SCADA, Centralized Traffic Control, Positive Train Control (PTC) and control center integration. Highly flexible and feature-rich, AIM enables railroads to maximize operational efficiency, cost-effectiveness and safety, all while providing an environment protected by the latest tools and techniques in cybersecurity.

KEY AREAS OF EXPERTISE

- Train monitoring and control
- Automatic train tracking
- Automatic route setting/ automatic routing
- Automatic traffic regulation and schedule deviation
- Schedule management
- Integrated yard management
- Bulletins, authorities and restrictions management
- Employee in Charge (EIC) terminals
- Emergency Operating Procedures (EOP)
- Power planning
- Playback and simulation
- Data acquisition
- Interface integration

242. Collins Aerospace's ARINC RailwayNet^{SM}/AIM system, implemented by Amtrak, is a SaaS and IaaS product that provides "full-featured network management and infrastructure, hardware, network, operating systems, and applications for fault, performance, security and configuration management."[120] Additionally, RailwayNet^{SM} is "designed to help meet the availability standards required for PTC operations."[121] Because RailwayNet^{SM} is designed to support railroads to meet the PTC requirements, RailwayNet^{SM} should be configured to manage train movements, including placing blocks on one or more sections of railway track to prevent trains from traversing the one or more sections of railway track.

243. In order to comply with and implement FRA's regulations (communication-based/processor-based train control technology designed to address a number of railway safety

[120] White Paper at 6.
[121] *Id.*

issues including train-to-train collisions, over-speed derailments, incursions into established work-zone limits, and train movement through a main-line switch that is in an improper position), RailwayNet^{SM}/AIM system and/or other similar system is configured to place a block on one or more specified sections of railway track to prevent trains from traversing the one or more sections of railway track.

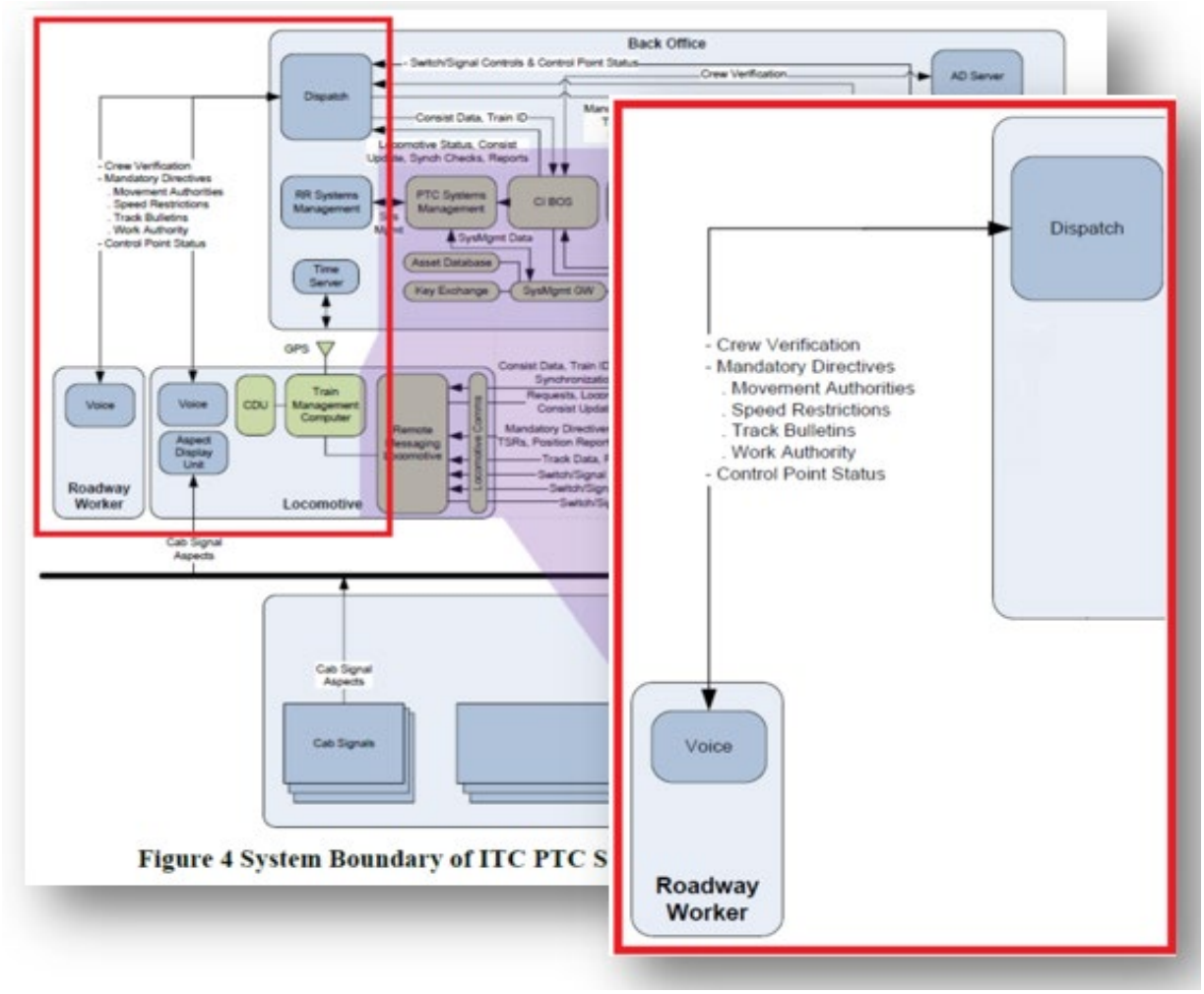

244. Accordingly, Amtrak's implementation of Collins Aerospace's ARINC RailwayNet^{SM}/AIM system and/or other similar system includes "a processor for controlling a plurality of track sections in the railway network, wherein each track section is associated with a corresponding interlock and is disposed in any of said plural railways of said railway network

that is managed by centralized control operation from the railway control apparatus, the processor controlling, by said centralized control operation, one or more interlocks amongst the plurality of railway interlocks dispersed in said plural railways of said railway network, to block railway traffic to one or more specified track sections."

245. Amtrak's implementation of Collins Aerospace's ARINC RailwayNet^{SM}/AIM system and/or other similar system further includes "a memory device storing computer-executable instructions."

246. Collins Aerospace advertises that RailwayNet^{SM}, which Amtrak uses, improves rail safety. "This system refers to communication-based/processor-based train control technology designed to address a number of rail safety issues, including train-to-train collisions, over-speed derailments, incursions into established work-zone limits, and train movement through a main-line switch that is in an improper position."[122]

247. Amtrak budgeted an additional $224,007 in FY19 for implementing a system to

[122] White Paper at 3.

enhance railway worker protection when working on track under foul time or track out of service. The system provides railway workers with an authorization code that corresponds to the blocking protection applied in the CETC control system via their mobile devices. Removal of the protection by the CETC train dispatcher will require the authorization code be provided by the railway worker. The system will utilize modifications to the CETC System platform functionality and mobile devices assigned to railway workers.

248. The deliverables included modification to each CETC System to provide EEPS functionality in at least Wilmington CETC (Mid-Atlantic Division); Boston CETC (NH to Boston, Springfield Line and MBTA Lines); NY CETC West; PSCC (Pennsylvania Station Central Control); and CETC Hudson-Albany Line**.** The deliverables also included EEPS mobile devices for railway workers; EEPS operating practices documentation; training program for railway workers and dispatchers; and operations management plans and procedures to be used after system acceptance.[123]

249. In a report authored by Collins Aerospace and submitted to the U.S. Department of Transportation, Collins Aerospace illustrates the claimed railway control apparatus as the "back office" in the below diagram.

[123] *Northeast Corridor One-Year Implementation Plan Fiscal Year 2019*, NEC COMMISSION 1, 233 (Oct. 2018), https://nec-commission.com/app/uploads/2018/10/NEC-One-Year-Plan-FY19.pdf.

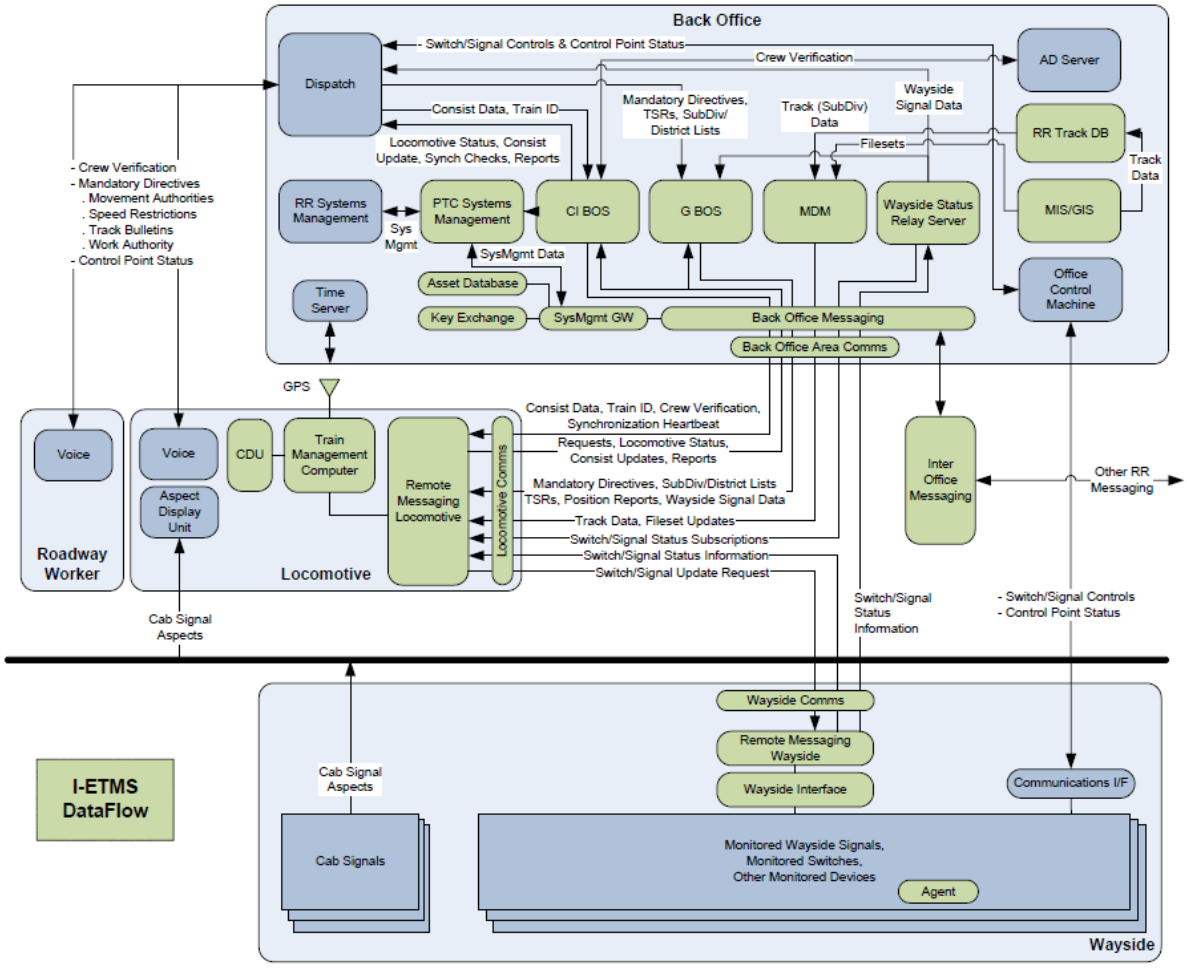

Figure 2 I-ETMS PTC Message Flows

250. Amtrak, for its implementation of Collins Aerospace's ARINC RailwayNet^{SM}/AIM system and/or other similar system or method, has purchased mobile devices for its railway workers and implemented a system whereby its CETC system sends authorization codes to the railway workers. In order to know which mobile device to send the authorization code to, the RailwayNet^{SM}/AIM system, as implemented by Amtrak, must have a memory device capable of storing computer-executable instructions.[124]

[124] *Northeast Corridor One-Year Implementation Plan Fiscal Year 2019*, NEC COMMISSION 1, 233 (Oct. 2018), https://nec-commission.com/app/uploads/2018/10/NEC-One-Year-Plan-FY19.pdf [hereinafter referred to as "*NEC One-Year Plan 2019*"].

All Other Amtrak Programs/Projects – Scopes	FY19 Proposed Budget
C.EN.101714. CETC AMTRAK SYSTEM-MOFW ENHANCED EMPLOYEE PROTECTION SYSTEM. Implement a system to enhance roadway worker protection when working on track under foul time or track out of service. The system will provide roadway workers with an authorization code that corresponds to the blocking protection applied in the CETC control system. Removal of the protection by the CETC train dispatcher will require the authorization code be provided by the roadway worker. The system will utilize modifications to the CETC System platform functionality and mobile devices assigned to roadway workers. Deliverables: • EEPS operating practices documentation; • Modification to each CETC System to provide EEPS functionality: - Wilmington CETC (Mid-Atlantic Division) - Boston CETC (NH to Boston, Springfield Line and MBTA Lines) - NY CETC West - PSCC - CETC Hudson-Albany Line • EEPS mobile devices for roadway workers; • Training program for roadway workers and dispatchers; • Operations management plans and procedures to be used after system acceptance;	$224,007

251. According to Amtrak's Northeast Corridor Annual Report for fiscal year 2017, Amtrak allocated more than $420,000 in implementing the Enhanced Employee Protection System (EEPS) in the Northeast Corridor through its implementation of Collins Aerospace's ARINC RailwayNet^{SM}.[125] It also specifies providing back-office infrastructure and messaging, including "[s]torage and delivery of crew and consist information, train IDs and clearances."[126]

252. Collins Aerospace has stated that the ARINC RailwayNet^{SM} system implemented by Amtrak is a SaaS and IaaS product that provides "full-featured network management and infrastructure, hardware, network, operating systems, and applications for fault, performance, security and configuration management."[127] It additionally specifies enabling ITC PTC interoperability and compliance with I-ETMS systems.[128]

253. According to Collins Aerospace, its RailwayNet^{SM} system supports I-ETMS message flows, including communications with railway workers to communicate crew

[125] *Northeast Corridor Annual Report: Operations and Infrastructure*, NEC COMMISSION 1, 49 (April 2018), https://nec-commission.com/app/uploads/2018/04/NEC-Annual-Report-FY17.pdf.
[126] White Paper at 7.
[127] White Paper at 6.
[128] Report at 43.

verification and mandatory directives.

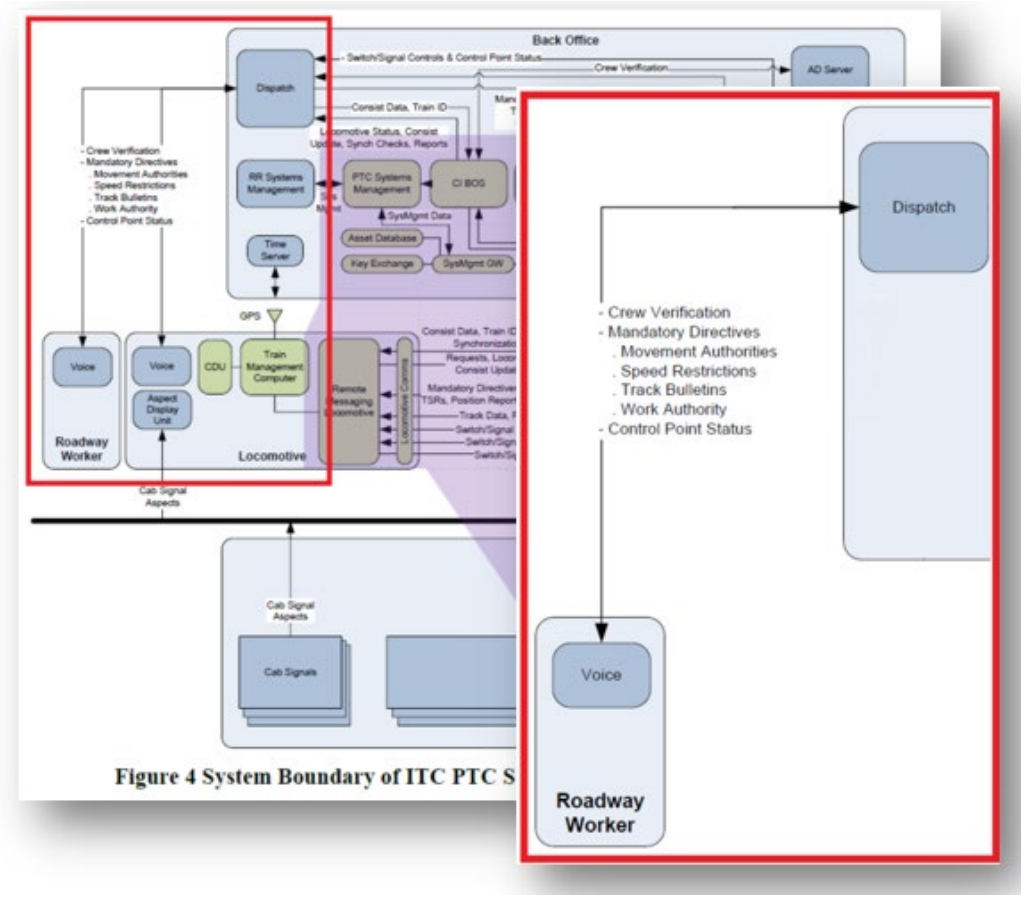

254. According to Amtrak's 2019 FY plan, it has implemented or is in the process of implementing an enhanced employee protection system (EEPS) that operates by "provid[ing] roadway workers with an authorization code that corresponds to the blocking protection applied in the CETC control system. Removal of the protection by the CETC train dispatcher will require the authorization code to be provided by the roadway worker."[129] In order to provide the railway workers with an authorization code, the system must have a memory device capable of storing computer-executable instructions.

[129] *Northeast Corridor One-Year Implementation Plan Fiscal Year 2019*, NEC COMMISSION 1, 233 (Oct. 2018), https://nec-commission.com/app/uploads/2018/10/NEC-One-Year-Plan-FY19.pdf.

All Other Amtrak Programs/Projects – Scopes	FY19 Proposed Budget
C.EN.101714. CETC AMTRAK SYSTEM-MOFW ENHANCED EMPLOYEE PROTECTION SYSTEM. Implement a system to enhance roadway worker protection when working on track under foul time or track out of service. The system will provide roadway workers with an authorization code that corresponds to the blocking protection applied in the CETC control system. Removal of the protection by the CETC train dispatcher will require the authorization code be provided by the roadway worker. The system will utilize modifications to the CETC System platform functionality and mobile devices assigned to roadway workers. Deliverables: • EEPS operating practices documentation; • Modification to each CETC System to provide EEPS functionality: - Wilmington CETC (Mid-Atlantic Division) - Boston CETC (NH to Boston, Springfield Line and MBTA Lines) - NY CETC West - PSCC - CETC Hudson-Albany Line • EEPS mobile devices for roadway workers; • Training program for roadway workers and dispatchers; • Operations management plans and procedures to be used after system acceptance;	$224,007

255. Amtrak budgeted $224,007 as FY19 Proposed Budget for implementing an "enhanced employee protection system" that will "provide roadway workers with an authorization code that corresponds to the blocking protection applied in the CETC control system."[130]

All Other Amtrak Programs/Projects – Scopes	FY19 Proposed Budget
C.EN.101714. CETC AMTRAK SYSTEM-MOFW ENHANCED EMPLOYEE PROTECTION SYSTEM. Implement a system to enhance roadway worker protection when working on track under foul time or track out of service. The system will provide roadway workers with an authorization code that corresponds to the blocking protection applied in the CETC control system. Removal of the protection by the CETC train dispatcher will require the authorization code be provided by the roadway worker. The system will utilize modifications to the CETC System platform functionality and mobile devices assigned to roadway workers. Deliverables: • EEPS operating practices documentation; • Modification to each CETC System to provide EEPS functionality: - Wilmington CETC (Mid-Atlantic Division) - Boston CETC (NH to Boston, Springfield Line and MBTA Lines) - NY CETC West - PSCC - CETC Hudson-Albany Line • EEPS mobile devices for roadway workers; • Training program for roadway workers and dispatchers; • Operations management plans and procedures to be used after system acceptance;	$224,007

256. Collins Aerospace provides that the ARINC RailwayNet^{SM}/AIM system

[130] *Northeast Corridor One-Year Implementation Plan Fiscal Year 2019*, NEC COMMISSION 1, 233 (Oct. 2018), https://nec-commission.com/app/uploads/2018/10/NEC-One-Year-Plan-FY19.pdf.

implemented by Amtrak specifies providing back office infrastructure and messaging, including "[s]torage and delivery of crew and consist information, train IDs and clearances."[131] It further specifies enabling ITC PTC interoperability and compliance with I-ETMS systems.[132] Because I-ETMS systems require communication of crew verification and employee authentication, Amtrak maintains electronic contact addresses of the railway field workers from a rail personnel contact database. RailwayNet[SM] messaging functions also include: "[k]ey exchange server," described as "[s]ecurity keys with data store."[133]

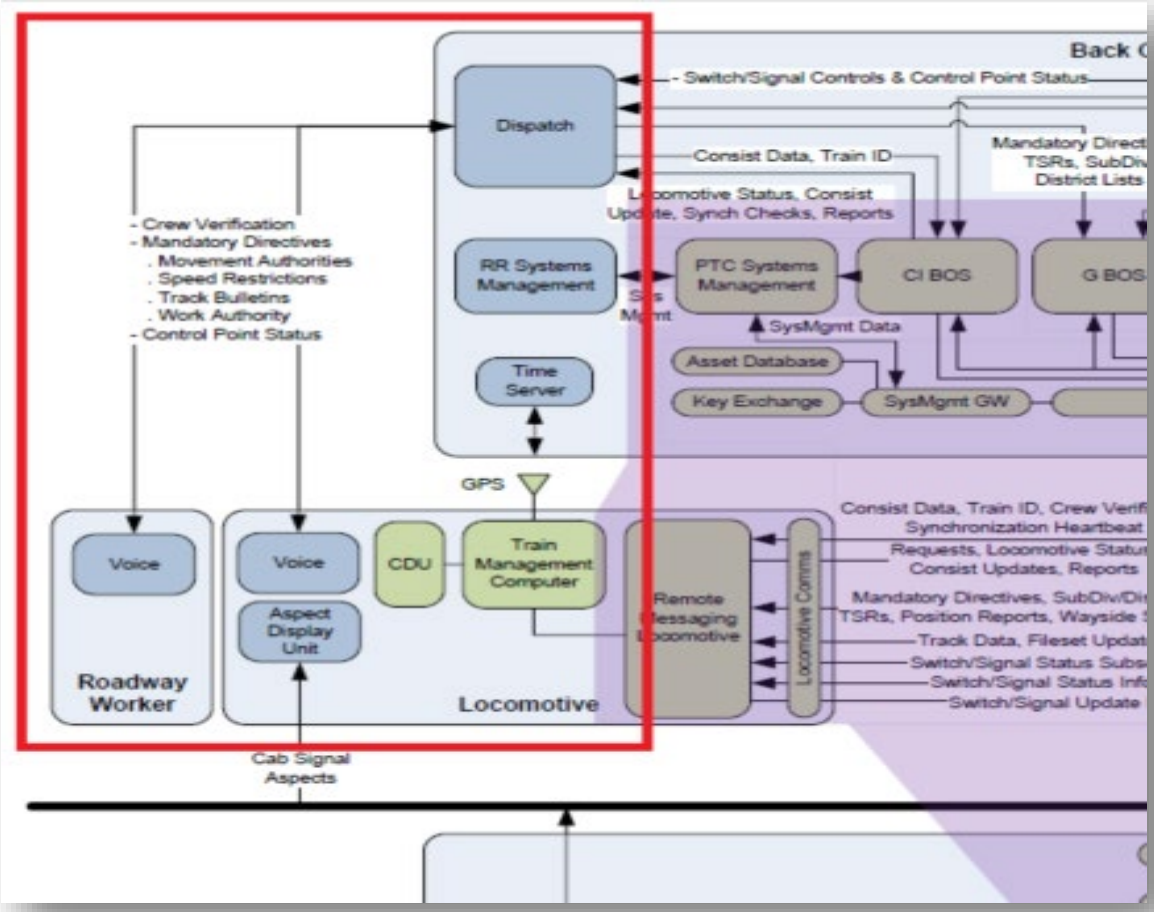

[131] *See* White Paper at 7.
[132] *See* Report at 43.
[133] White Paper at 7.

257. Additionally, RailwayNet^{SM} serves as a node on a network of Class I railroads, enabling interoperability and electronic communications connectivity to the network.[134]

258. Accordingly, Amtrak's implementation of Collins Aerospace's ARINC RailwayNet^{SM}/AIM system and/or other similar system includes "a memory device storing computer-executable instructions."

259. Amtrak's implementation of Collins Aerospace's ARINC RailwayNet^{SM}/AIM system and/or other similar system includes a railway control apparatus that executes computer-executable instructions to "receive a selection of at least one track section amongst the plurality of track sections."

260. Amtrak's implementation of Collins Aerospace's ARINC RailwayNet^{SM}/AIM system and/or other similar system is a CETC system which, by definition, is configured for centralized control of traffic of a centrally controllable railway network including plural railways and a plurality of railway traffic interlocks dispersed in the plural railways and controls access to the railway tracks.[135] Further, Amtrak's implementation of Collins Aerospace's ARINC RailwayNet^{SM}/AIM system and/or other similar system can place tracks in "foul time:"

---

[134] *Id.* at 4.

[135] *See A Guide to Key Railroad Terminology for the Northeast Corridor*, AMTRAK, https://media.amtrak.com/wp-content/uploads/2017/07/NEC-Terms-primer-v1.pdf (last visited April 3, 2022) ("Dispatchers use computerized Centralized Traffic & Electrification Control (CETC) systems to [centrally] control train movement over most of the NEC.").

All Other Amtrak Programs/Projects – Scopes	FY19 Proposed Budget
C.EN.101714. CETC AMTRAK SYSTEM-MOFW ENHANCED EMPLOYEE PROTECTION SYSTEM. Implement a system to enhance roadway worker protection when working on track under foul time or track out of service. The system will provide roadway workers with an authorization code that corresponds to the blocking protection applied in the CETC control system. Removal of the protection by the CETC train dispatcher will require the authorization code be provided by the roadway worker. The system will utilize modifications to the CETC System platform functionality and mobile devices assigned to roadway workers. Deliverables: • EEPS operating practices documentation; • Modification to each CETC System to provide EEPS functionality: - Wilmington CETC (Mid-Atlantic Division) - Boston CETC (NH to Boston, Springfield Line and MBTA Lines) - NY CETC West - PSCC - CETC Hudson-Albany Line • EEPS mobile devices for roadway workers; • Training program for roadway workers and dispatchers; • Operations management plans and procedures to be used after system acceptance;	$224,007

261. Foul time is defined as "a method of establishing working limits on controlled track in which a roadway worker is notified by the train dispatcher or control operator that no trains will operate within a specific segment of controlled track until the roadway worker reports clear of the track." 49 C.F.R. Part 214.7. The "specified segments" referred to in the rule are the "selection of at least one track section amongst the plurality of track sections" referred to in this claim element.

262. In a report authored by Collins Aerospace and submitted to the U.S. Department of Transportation, Collins Aerospace illustrates the claimed railway control apparatus as the "back office" in the below diagram.

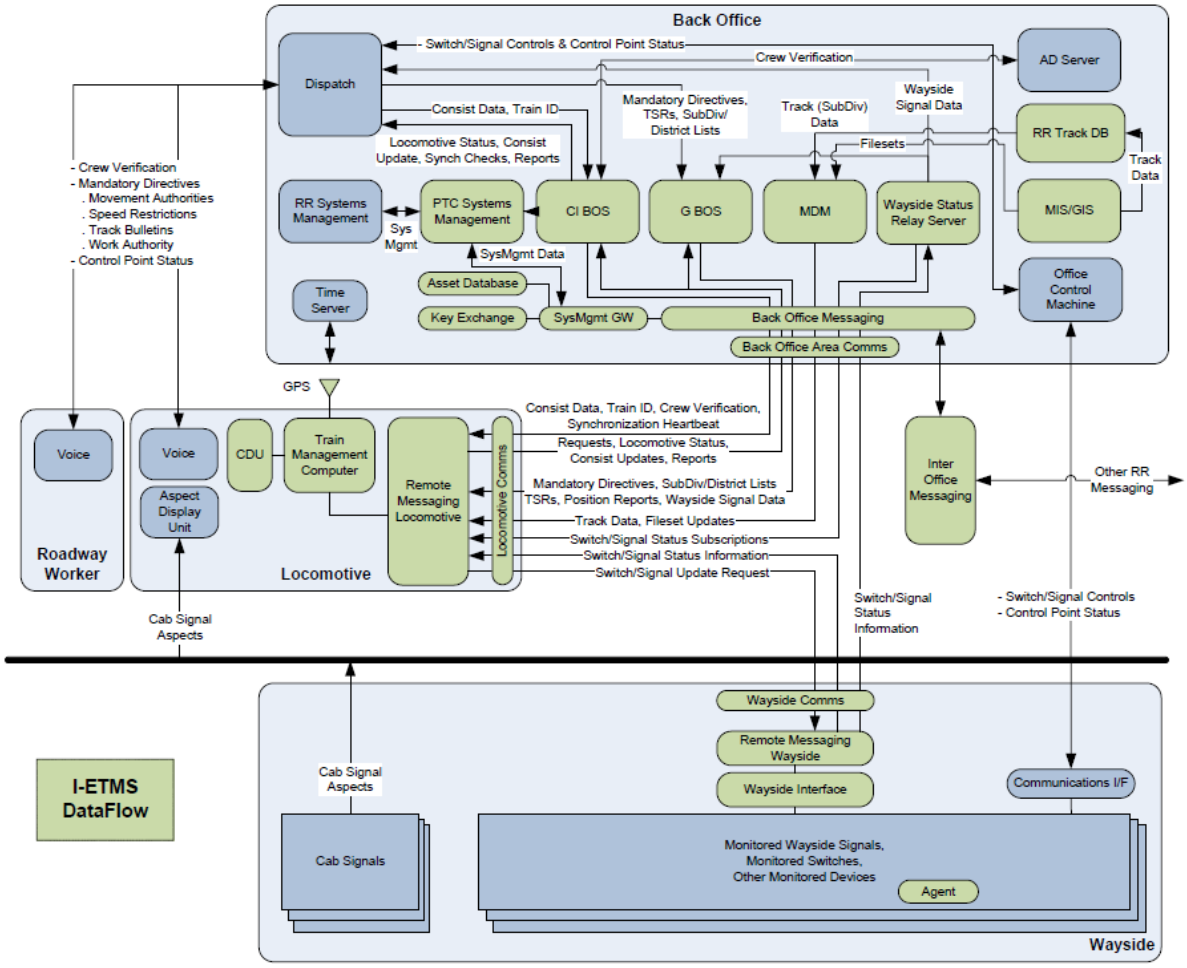

Figure 2 I-ETMS PTC Message Flows

263. According to Amtrak's Northeast Corridor Annual Report for fiscal year 2017, Amtrak allocated more than $420,000 in implementing the Enhanced Employee Protection System (EEPS) in the Northeast Corridor through its implementation of Collins Aerospace's ARINC RailwayNet^{SM}.[136] It also specifies providing back office infrastructure and messaging, including "[s]torage and delivery of crew and consist information, train IDs and clearances."[137]

[136] *Northeast Corridor Annual Report: Operations and Infrastructure*, NEC COMMISSION 1, 49 (April 2018), https://nec-commission.com/app/uploads/2018/04/NEC-Annual-Report-FY17.pdf.
[137] White Paper at 7.

C.EN.101711	FEN AMTRAK NEC - FENCE UPGRADES	3,082,806	1,446,696		
C.EN.101713	RAIL AMTRAK NEC - INSULATED JOINT REPLACEMENT PROGRAM	2,577,715	1,168,866	38,720	
C.EN.101714	CETC AMTRAK SYSTEM-MOFW ENHANCED EMPLOYEE PROTECTION SYSTEM	421,503	409,692		
C.EN.101732	RAD AMTRAK NEC - RADIO SYSTEM UPGRADES	-	-		
C.EN.101737	STA PENN STATION NY - STATION CHILLED WATER SYSTEM UPGRADE	-	-		
C.EN.201034	ACSE AMTRAK OWNED-POSITIVE TRAIN CONTROL PTC INSTALLATION	3,150,755	3,023,578		
C.EN.201264	POLE ZOO TO PAOLI - CATENARY STRUCTURE REPLACEMENT DESIGN	71,846	12,551		
C.TR.100074	STA NEW ENGLAND DIV - INSTALL TRAIN APPROACH MESSAGE SYS	286,337	133,789	152,547	

264. According to Collins Aerospace, its RailwayNet^{SM} system supports I-ETMS message flows, including communications with railway workers to communicate crew verification and mandatory directives.

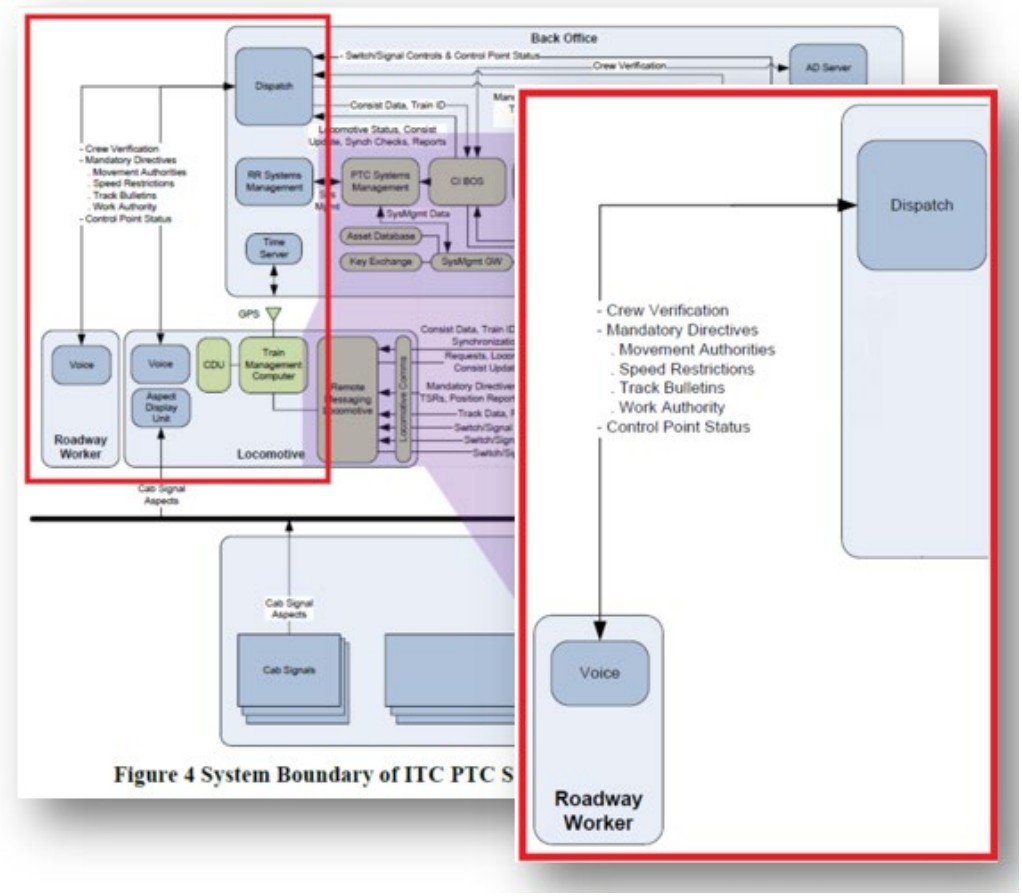

265. In order for the "back office" to communicate with the rail workers to block railway traffic to one or more specified track sections, the system must be able to receive a selection of at least one track section amongst the plurality of track sections.

266. Accordingly, Amtrak's implementation of Collins Aerospace's ARINC RailwayNet^{SM}/AIM system and/or other similar system includes a railway control apparatus that executes computer-executable instructions to "receive a selection of at least one track section amongst the plurality of track sections."

267. Amtrak's implementation of Collins Aerospace's ARINC RailwayNet^{SM}/AIM system and/or other similar system includes a railway control apparatus that executes computer-executable instructions to "transmit a block signal to the corresponding interlock associated with the at least one selected track section, to place a block on the selected track section by said

centralized control operation from the railway control apparatus."

268. Amtrak budgeted $224,007 as FY19 Proposed Budget for implementing an "enhanced employee protection system."

All Other Amtrak Programs/Projects – Scopes	FY19 Proposed Budget
C.EN.101714. CETC AMTRAK SYSTEM-MOFW ENHANCED EMPLOYEE PROTECTION SYSTEM. Implement a system to enhance roadway worker protection when working on track under foul time or track out of service. The system will provide roadway workers with an authorization code that corresponds to the blocking protection applied in the CETC control system. Removal of the protection by the CETC train dispatcher will require the authorization code be provided by the roadway worker. The system will utilize modifications to the CETC System platform functionality and mobile devices assigned to roadway workers. Deliverables: • EEPS operating practices documentation; • Modification to each CETC System to provide EEPS functionality: - Wilmington CETC (Mid-Atlantic Division) - Boston CETC (NH to Boston, Springfield Line and MBTA Lines) - NY CETC West - PSCC - CETC Hudson-Albany Line • EEPS mobile devices for roadway workers; • Training program for roadway workers and dispatchers; • Operations management plans and procedures to be used after system acceptance;	$224,007

269. Collins Aerospace's ARINC RailwayNet^{SM}AIM system, implemented by Amtrak, that places track sections in "foul time" "transmit[s] a block signal to the corresponding interlock associated with the at least one selected track section, to place a block on the selected track section by said centralized control operation from the railway control apparatus." as recited in this claim element. Specifically, FRA regulations 49 C.F.R. § 214.323 defines "foul time" as "a method of establishing working limits on controlled track in which a roadway worker is notified by the train dispatcher or control operator that *no trains will operate within a specific segment of controlled track until the roadway worker reports clear of the track*." Because Amtrak, through its implementation of ARINC RailwayNet^{SM}/AIM, has the ability to place tracks in foul time, it includes an ability to place blocks.

270. Collins Aerospace advertises that its AIM system provides "train monitoring and control," automatic route setting/automatic routing," "automatic traffic regulation," and

"bulletins, authorities, and restrictions management."[138] One or more of these functionalities encompasses the claimed ability to place blocks.

Centralized Traffic Control and SCADA

Collins designs and integrates state-of-the-art rail control solutions using our ARINC Advanced Information Management (AIM®) platform. AIM serves as an end-to-end solution for all rail control requirements, including SCADA, Centralized Traffic Control, Positive Train Control (PTC) and control center integration. Highly flexible and feature-rich, AIM enables railroads to maximize operational efficiency, cost-effectiveness and safety, all while providing an environment protected by the latest tools and techniques in cybersecurity.

KEY AREAS OF EXPERTISE

- Train monitoring and control
- Automatic train tracking
- Automatic route setting/ automatic routing
- Automatic traffic regulation and schedule deviation
- Schedule management
- Integrated yard management
- Bulletins, authorities and restrictions management
- Employee in Charge (EIC) terminals
- Emergency Operating Procedures (EOP)
- Power planning
- Playback and simulation
- Data acquisition
- Interface integration

271. Collins Aerospace's ARINC RailwayNet^{SM}/AIM system, implemented by Amtrak, is a SaaS and IaaS product that provides "full-featured network management and infrastructure, hardware, network, operating systems, and applications for fault, performance, security and configuration management."[139] Additionally, RailwayNet^{SM} is "designed to help meet the availability standards required for PTC operations."[140] Because RailwayNet^{SM} is designed to support railroads to meet the PTC requirements, RailwayNet^{SM} should be configured to manage train movements, including placing blocks on one or more sections of railway track to

[138] *Intelligence-Based Rail Solutions*, Collins Aerospace, https://www.collinsaerospace.com/-/media/project/collinsaerospace/collinsaerospace-website/product-assets/marketing/r/rail/arinc-rail-solutions-for-passengers.pdf?rev=e7e5ddbff2de4154ba265f03e27f14d3.
[139] White Paper at 6.
[140] *Id.*

prevent trains from traversing the one or more sections of railway track.

272. In order to comply with and implement FRA's regulations (communication-based/processor-based train control technology designed to address a number of railway safety issues including train-to-train collisions, over-speed derailments, incursions into established work-zone limits, and train movement through a main-line switch that is in an improper position), RailwayNet^{SM}/AIM system and/or other similar system is configured to place a block on one or more sections of railway track to prevent trains from traversing the one or more sections of railway track.

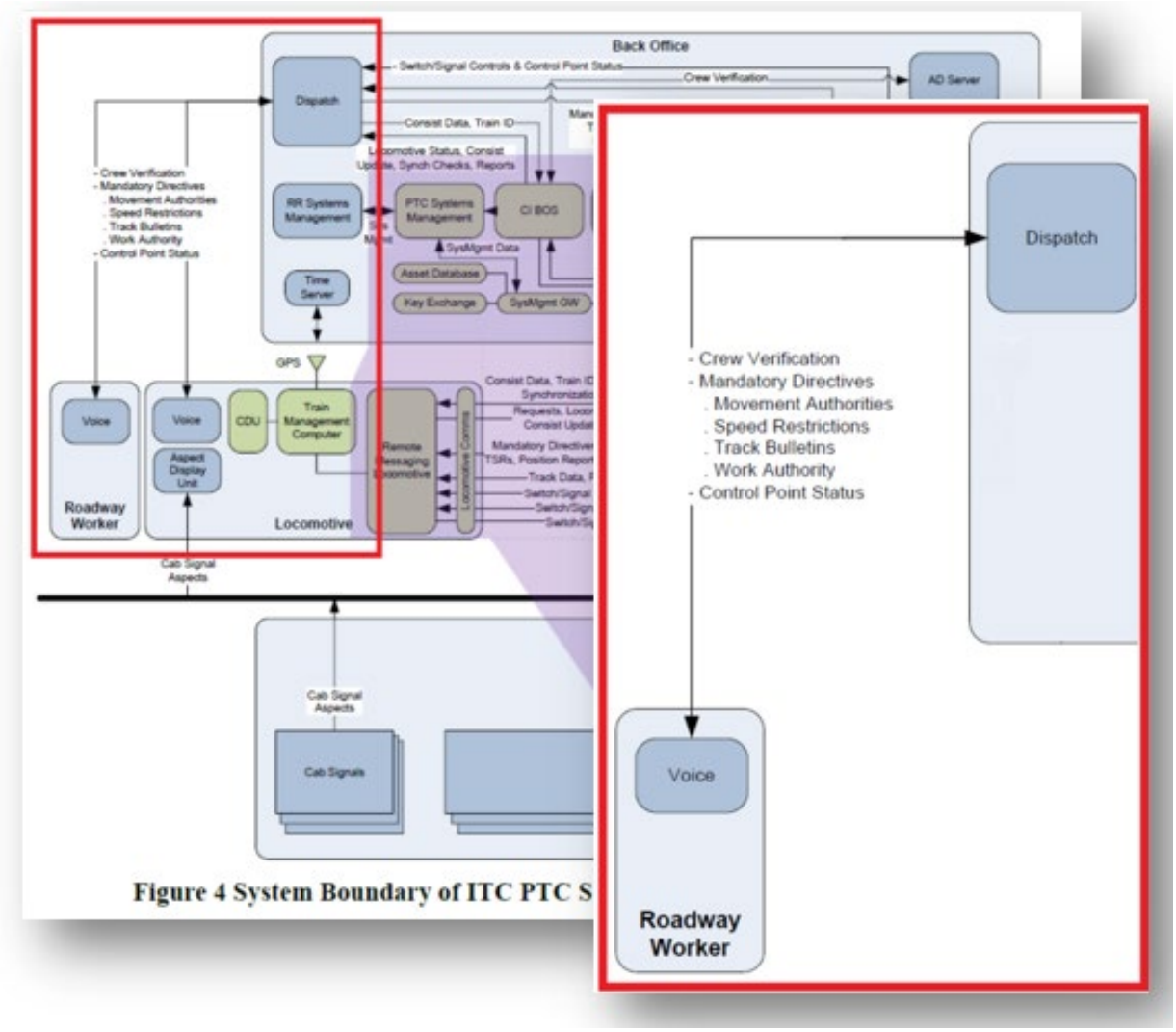

Figure 4 System Boundary of ITC PTC S

273. Accordingly, Amtrak's implementation of Collins Aerospace's ARINC

RailwayNet^{SM}/AIM system and/or other similar system includes a railway control apparatus that executes computer-executable instructions to "transmit a block signal to the corresponding interlock associated with the at least one selected track section, to place a block on the selected track section by said centralized control operation from the railway control apparatus."

274. Amtrak's implementation of Collins Aerospace's ARINC RailwayNet^{SM}/AIM system and/or other similar system includes a railway control apparatus that executes computer-executable instructions to "generate a secret code associated with the at least one selected track section."

275. Amtrak budgeted $224,007 as FY19 Proposed Budget for implementing an "enhanced employee protection system" that will "provide roadway workers with an authorization code that corresponds to the blocking protection applied in the CETC control system."[141]

All Other Amtrak Programs/Projects – Scopes	FY19 Proposed Budget
C.EN.101714. CETC AMTRAK SYSTEM-MOFW ENHANCED EMPLOYEE PROTECTION SYSTEM. Implement a system to enhance roadway worker protection when working on track under foul time or track out of service. The system will provide roadway workers with an authorization code that corresponds to the blocking protection applied in the CETC control system. Removal of the protection by the CETC train dispatcher will require the authorization code be provided by the roadway worker. The system will utilize modifications to the CETC System platform functionality and mobile devices assigned to roadway workers. Deliverables: • EEPS operating practices documentation; • Modification to each CETC System to provide EEPS functionality: - Wilmington CETC (Mid-Atlantic Division) - Boston CETC (NH to Boston, Springfield Line and MBTA Lines) - NY CETC West - PSCC - CETC Hudson-Albany Line • EEPS mobile devices for roadway workers; • Training program for roadway workers and dispatchers; • Operations management plans and procedures to be used after system acceptance;	$224,007

276. Collins Aerospace provides that the ARINC RailwayNet^{SM}/AIM system implemented by Amtrak specifies providing back office infrastructure and messaging, including

[141] *Northeast Corridor One-Year Implementation Plan Fiscal Year 2019*, NEC COMMISSION 1, 233 (Oct. 2018), https://nec-commission.com/app/uploads/2018/10/NEC-One-Year-Plan-FY19.pdf.

"[s]torage and delivery of crew and consist information, train IDs and clearances."[142] It further specifies enabling ITC PTC interoperability and compliance with I-ETMS systems.[143] Because I-ETMS systems require communication of crew verification and employee authentication, Amtrak maintains electronic contact addresses of the railway field workers from a rail personnel contact database. RailwayNet[SM] messaging functions also include: "[k]ey exchange server," described as "[s]ecurity keys with data store."[144]

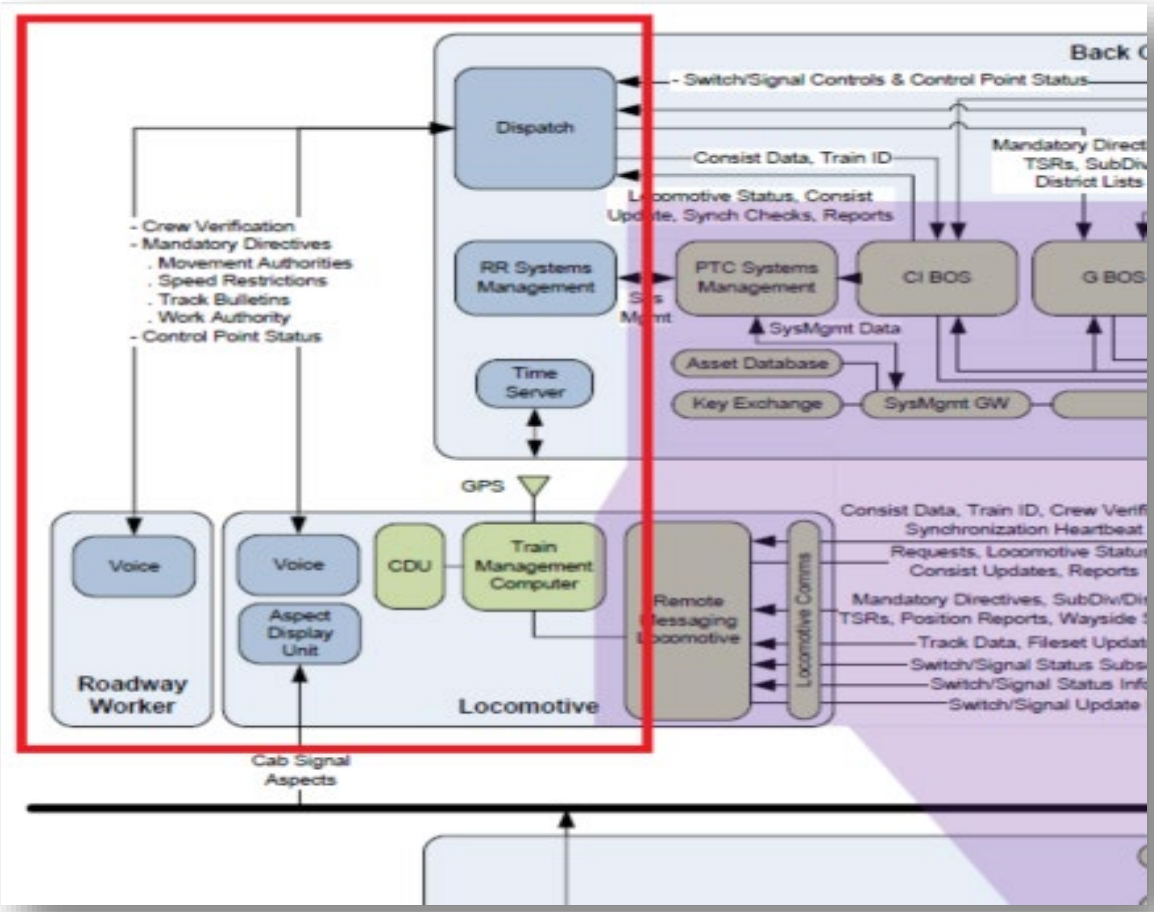

277. Accordingly, Amtrak's implementation of Collins Aerospace's ARINC

[142] *See* White Paper at 7.
[143] *See* Report at 43.
[144] White Paper at 7.

RailwayNet^{SM}/AIM system and/or other similar system includes a railway control apparatus that executes computer-executable instructions to "generate a secret code associated with the at least one selected track section."

278. Amtrak's implementation of Collins Aerospace's ARINC RailwayNet^{SM}/AIM system and/or other similar system includes a railway control apparatus that executes computer-executable instructions to "transmit the secret code to a remote user terminal."

279. Amtrak budgeted $224,007 as FY19 Proposed Budget for implementing an "enhanced employee protection system" that will "provide roadway workers with an authorization code that corresponds to the blocking protection applied in the CETC control system."[145]

All Other Amtrak Programs/Projects – Scopes	FY19 Proposed Budget
C.EN.101714. CETC AMTRAK SYSTEM-MOFW ENHANCED EMPLOYEE PROTECTION SYSTEM. Implement a system to enhance roadway worker protection when working on track under foul time or track out of service. The system will provide roadway workers with an authorization code that corresponds to the blocking protection applied in the CETC control system. Removal of the protection by the CETC train dispatcher will require the authorization code be provided by the roadway worker. The system will utilize modifications to the CETC System platform functionality and mobile devices assigned to roadway workers. Deliverables: • EEPS operating practices documentation; • Modification to each CETC System to provide EEPS functionality: - Wilmington CETC (Mid-Atlantic Division) - Boston CETC (NH to Boston, Springfield Line and MBTA Lines) - NY CETC West - PSCC - CETC Hudson-Albany Line • EEPS mobile devices for roadway workers; • Training program for roadway workers and dispatchers; • Operations management plans and procedures to be used after system acceptance;	$224,007

280. Collins Aerospace provides that the ARINC RailwayNet^{SM}/AIM system implemented by Amtrak specifies providing back office infrastructure and messaging, including "[s]torage and delivery of crew and consist information, train IDs and clearances."[146] It further

[145] *Northeast Corridor One-Year Implementation Plan Fiscal Year 2019*, NEC COMMISSION 1, 233 (Oct. 2018), https://nec-commission.com/app/uploads/2018/10/NEC-One-Year-Plan-FY19.pdf.
[146] *See* White Paper at 7.

specifies enabling ITC PTC interoperability and compliance with I-ETMS systems.[147] Because I-ETMS systems require communication of crew verification and employee authentication, Amtrak maintains electronic contact addresses of the railway field workers from a rail personnel contact database. RailwayNet^{SM} messaging functions also include: "[k]ey exchange server," described as "[s]ecurity keys with data store."[148]

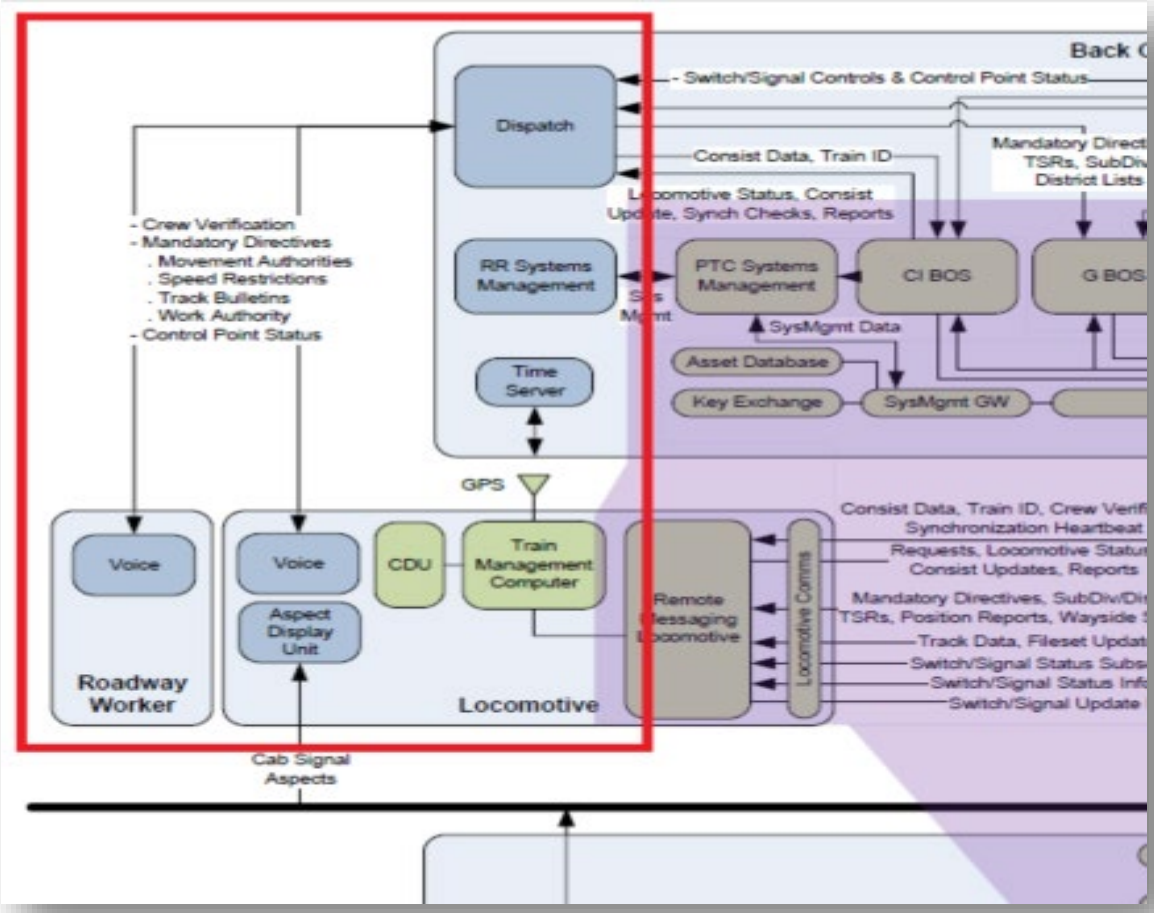

281. Accordingly, Amtrak's implementation of Collins Aerospace's ARINC RailwayNet^{SM}/AIM system and/or other similar system includes a railway control apparatus that

[147] *See* Report at 43.
[148] White Paper at 7.

executes computer-executable instructions to "transmit the secret code to a remote user terminal."

282. Therefore, Amtrak, through its implementation of Collins Aerospace's ARINC RailwayNet^{SM}/AIM systems and/or other similar system or method has infringed and continues to infringe at least claim 20 of the '115 patent.

B. Infringement Based on Amtrak's Implementation of AMTEC System

283. In violation of 35 U.S.C. § 271(a), Amtrak has infringed and continues to infringe one or more claims of the '115 patent by making, using, offering for sale, selling, and/or importing in or into the United States a system or method covered by the '115 patent, including, but not limited to, at least Amtrak's implementation of its AMTEC system and/or other similar system.[149]

284. Amtrak, through its implementation AMTEC system and/or other similar system or method, infringes at least claim 20 of the '115 patent.

285. Amtrak's AMTEC system and/or other similar system is a "railway control apparatus for centralized control of a centrally controllable railway network including plural railways and a plurality of railway interlocks dispersed in said plural railways."

286. AMTEC stands for Amtrak Train and Electrification Control. AMTEC is Amtrak's proprietary train dispatch system that implements Amtrak's CETC (Centralized Electrification and Train Control). Amtrak uses the AMTEC train dispatching system to improve central train control functionality across Amtrak's tracks.[150]

---

[149] Further investigation may reveal that others of Amtrak's products and systems also directly or indirectly infringe at least claim 19 or other claims of the '835 patent.

[150] *See Management Trainee Program*, AMTRAK, https://careers.amtrak.com/content/Management-Trainee-Program/?locale=en_US (last visited April 7, 2022) ("Work to support the Amtrak Train and Electrification Control (AMTEC)

287. In 2018, Amtrak budgeted $2,405,319 as Northeast Corridor (NEC)-wide expenditure for implementing the SEPTA (Southeastern Pennsylvania Transportation Authority) and Metro North Enhanced Employee Protection System (EEPS) into the Amtrak CETC (Centralized Electrification and Traffic Control) systems on the NEC in October 2017 for the fiscal year 2018.[151]

C.EN.101714. CETC Amtrak System - MOFW Enhanced Employee Protection System (Segment 31). CETC - Enhanced Employee Protection System. This project will implement the SEPTA and Metro North Enhanced Employee Protection System (EEPS) into the Amtrak CETC systems on the NEC.	$2,405,319

288. In February 2019, Amtrak's Five-Year Infrastructure Asset Line Plan for FY 2019-2024 allocated $3,650,000 for FY 2019 and $5,194,913 for FY 2020 to convert the ARINC system to the AMTEC system and replace the Mid-Atlantic Division ("MAD") and Northeast Division ("NED") CETC primary and backup system with the AMTEC system in the Washington to Boston line.[152]

---

system… [and] work to support the expansion of the AMTEC train dispatching system to improve train control functionality across the Northeast and Southeast Divisions."); *see also Director, IT, Train Control Systems*, AMTRAK, https://careers.amtrak.com/job/Philadelphia-PA-19104/689937700/ (last visited April 7, 2022) ("Provide leadership, direction, and oversight to the IT group responsible for Amtrak's proprietary train dispatch system (AMTEC – Amtrak Centralized Electrification and Train Control).").

[151] *Northeast Corridor One-Year Implementation Plan*, NEC COMMISSION 1, 16 (Oct. 2017), http://nec-commission.com/app/uploads/2018/03/NEC-One-Year-Implementation-Plan-FY18.pdf.

[152] *Amtrak Five Year Infrastructure Asset Line Plan FY 2019-2024*, AMTRAK 1, 320, https://www.amtrak.com/content/dam/projects/dotcom/english/public/documents/corporate/businessplanning/Amtrak-Infrastructure-Asset-Line-Plan-FY20-24.pdf (last visited April 7, 2022).

C.EN.101767 - WAS-BOS CETC ARINC TO AMTEC SOFTWARE	FAST Act Category:	Construction Program Priority:
The Washington to Boston ARINC to AMTEC Software Upgrade Project will replace the MAD and NED CETC primary and backup system with the AMTEC system. The project will be design, implement and test the new MAD and NED AMTEC systems by in-house PSCC staff as well as maintenance of all system interfaces. Transportation personnel in Wilmington, Boston and Remote locations will be able to transfer their operations to the new system. Power Director and Load Dispatcher operations will continue, either by a newly selected system by Electric Traction (E/T) personnel or by the existing system. The project will provide training on the new system to both Transportation and CETC specialists. Location: NEC wide.	- Improvements Also Supports: - Normalized Capital Replacement - Strategic Initiatives that improve operational performance, lower cost or improve efficiency - Statutory, regulatory, or other legal mandates	N/A Project Benefits: - Safety - SOGR - Resilience

FY2019	FY2020	FY2021	FY2022	FY2023	FY2024	C.EN.101767 Total
$3,650,000	$5,194,913	$0	$0	$0	$0	$8,844,193

289. Six months earlier, in October 2018, Amtrak had estimated a total project cost of $6,593,463—with a fiscal year 2019 planned expenditure of $6,212,732—to convert ARINC system to AMTEC Software and replace the MAD and NED CETC primary and backup system with the AMTEC system in the Washington to Boston line.[153]

Washington to Boston ARINC to AMTEC Software Upgrade Project. CETC WASHINGTON TO BOSTON. C.EN.101767. FY19 scope includes completion of installation and testing of all software and hardware on the MAD-Harrisburg line and MAD-Mid-Atlantic Divisions. The project anticipates installation and testing on the NED-Springfield Line in FY19. The remaining work that is needed NED-Mainline will be start and complete in Early FY20. FY19 Phases — Schedule MAD-Harrisburg line Phase 1 — 10/01/18 - 02/28/19 MAD- Mid-Atlantic Phase 2 — 01/01/19 - 05/20/19 NED-Springfield line Phase 3 — 06/01/19 - 10/01/19 For project details, see Appendix A.	$6,593,463	$6,212,732

290. In early 2021, as part of Amtrak's new train control systems, Amtrak announced the "initiative to standardize dispatch systems on the Amtrak-developed AMTEC platform to

[153] *Northeast Corridor One-Year Implementation Plan Fiscal Year 2019*, NEC COMMISSION 1, 108 (Oct. 2018), https://nec-commission.com/app/uploads/2018/10/NEC-One-Year-Plan-FY19.pdf.

replace the legacy Collins dispatch system [that] will provide a common dispatch platform for the NEC and the Central division that is more reliable and resilient and will reduce maintenance cost."[154] The EEPS system described in Amtrak's 2019 FY plan has been or will be implemented as part of the AMTEC system upgrade.

291. Accordingly, Amtrak's AMTEC system and/or other similar system is "a railway control apparatus for centralized control of a centrally controllable railway network including plural railways and a plurality of railway interlocks dispersed in said plural railways."

292. Amtrak's AMTEC system and/or other similar system includes "a processor for controlling a plurality of track sections in the railway network, wherein each track section is associated with a corresponding interlock and is disposed in any of said plural railways of said railway network that is managed by centralized control operation from the railway control apparatus, the processor controlling, by said centralized control operation, one or more interlocks amongst the plurality of railway interlocks dispersed in said plural railways of said railway network, to block railway traffic to one or more specified track sections."

293. AMTEC is a CETC system which, by definition, is configured for centralized control of traffic of a centrally controllable railway network including plural railways and a plurality of railway traffic interlocks dispersed in the plural railways and controls access to the railway tracks.[155] Further, the AMTEC system can place tracks in "foul time:"

---

[154] *Five-Year Plans | Service And Asset Line Plans | FY 2021-2026*, AMTRAK 1, 149, https://www.amtrak.com/content/dam/projects/dotcom/english/public/documents/corporate/businessplanning/Amtrak-Service-Line-Asset-Line-Plans-FY21-26.pdf (last visited April 7, 2022).

[155] *See A Guide to Key Railroad Terminology for the Northeast Corridor*, AMTRAK, https://media.amtrak.com/wp-content/uploads/2017/07/NEC-Terms-primer-v1.pdf (last visited April 3, 2022) ("Dispatchers use computerized Centralized Traffic & Electrification Control (CETC) systems to [centrally] control train movement over most of the NEC.").

All Other Amtrak Programs/Projects – Scopes	FY19 Proposed Budget
C.EN.101714. CETC AMTRAK SYSTEM-MOFW ENHANCED EMPLOYEE PROTECTION SYSTEM. Implement a system to enhance roadway worker protection when working on track under foul time or track out of service. The system will provide roadway workers with an authorization code that corresponds to the blocking protection applied in the CETC control system. Removal of the protection by the CETC train dispatcher will require the authorization code be provided by the roadway worker. The system will utilize modifications to the CETC System platform functionality and mobile devices assigned to roadway workers. Deliverables: • EEPS operating practices documentation; • Modification to each CETC System to provide EEPS functionality: - Wilmington CETC (Mid-Atlantic Division) - Boston CETC (NH to Boston, Springfield Line and MBTA Lines) - NY CETC West - PSCC - CETC Hudson-Albany Line • EEPS mobile devices for roadway workers; • Training program for roadway workers and dispatchers; • Operations management plans and procedures to be used after system acceptance;	$224,007

294. Foul time is defined as "a method of establishing working limits on controlled track in which a roadway worker is notified by the train dispatcher or control operator that no trains will operate within a specific segment of controlled track until the roadway worker reports clear of the track." 49 C.F.R. Part 214.7. The "specified segments" referred to in the rule are the "plural railways" referred to in this claim element.

295. Amtrak budgeted $224,007 as FY19 Proposed Budget for implementing an "enhanced employee protection system."

All Other Amtrak Programs/Projects – Scopes	FY19 Proposed Budget
C.EN.101714. CETC AMTRAK SYSTEM-MOFW ENHANCED EMPLOYEE PROTECTION SYSTEM. Implement a system to enhance roadway worker protection when working on track under foul time or track out of service. The system will provide roadway workers with an authorization code that corresponds to the blocking protection applied in the CETC control system. Removal of the protection by the CETC train dispatcher will require the authorization code be provided by the roadway worker. The system will utilize modifications to the CETC System platform functionality and mobile devices assigned to roadway workers. Deliverables: • EEPS operating practices documentation; • Modification to each CETC System to provide EEPS functionality: - Wilmington CETC (Mid-Atlantic Division) - Boston CETC (NH to Boston, Springfield Line and MBTA Lines) - NY CETC West - PSCC - CETC Hudson-Albany Line • EEPS mobile devices for roadway workers; • Training program for roadway workers and dispatchers; • Operations management plans and procedures to be used after system acceptance;	$224,007

296. The portion of Amtrak's AMTEC system that places track sections in "foul time"

is the ability "to block railway traffic" as recited in this claim element. Specifically, FRA regulations 49 C.F.R. § 214.323 defines "foul time" as "a method of establishing working limits on controlled track in which a roadway worker is notified by the train dispatcher or control operator that *no trains will operate within a specific segment of controlled track until the roadway worker reports clear of the track*." Because Amtrak, through its implementation of AMTEC, has the ability to place tracks in foul time, it includes "a processor for controlling a plurality of track sections in the railway network, wherein each track section is associated with a corresponding interlock and is disposed in any of said plural railways of said railway network that is managed by centralized control operation from the railway control apparatus, the processor controlling, by said centralized control operation, one or more interlocks amongst the plurality of railway interlocks dispersed in said plural railways of said railway network, to block railway traffic to one or more specified track sections."

297. According to Amtrak's 2019 FY plan, it has implemented an enhanced employee protection system (EEPS) that operates by "provid[ing] roadway workers with an authorization code that corresponds to the ***blocking protection*** applied in the CETC control system."[156] The referenced "blocking protection applied in the CETC control system [AMTEC]" is a reference to the claimed ability to "to block railway traffic to one or more specified track ."

[156] *2019 NEC One-Year Plan* at 233 (emphasis added).

All Other Amtrak Programs/Projects – Scopes	FY19 Proposed Budget
C.EN.101714. CETC AMTRAK SYSTEM-MOFW ENHANCED EMPLOYEE PROTECTION SYSTEM. Implement a system to enhance roadway worker protection when working on track under foul time or track out of service. The system will provide roadway workers with an authorization code that corresponds to the blocking protection applied in the CETC control system. Removal of the protection by the CETC train dispatcher will require the authorization code be provided by the roadway worker. The system will utilize modifications to the CETC System platform functionality and mobile devices assigned to roadway workers. Deliverables: • EEPS operating practices documentation; • Modification to each CETC System to provide EEPS functionality: - Wilmington CETC (Mid-Atlantic Division) - Boston CETC (NH to Boston, Springfield Line and MBTA Lines) - NY CETC West - PSCC - CETC Hudson-Albany Line • EEPS mobile devices for roadway workers; • Training program for roadway workers and dispatchers; • Operations management plans and procedures to be used after system acceptance;	$224,007

298. The AMTEC system can place tracks in "foul time" which is defined as "a method of establishing working limits on controlled track in which a roadway worker is notified by the train dispatcher or control operator that no trains will operate within a specific segment of controlled track until the roadway worker reports clear of the track." 49 C.F.R. Part 214.7. The "specified segments" referred to in the rule are the "plural railways" referred to in this claim element. In order to provide "blocking protection" to the railway workers and place tracks in "foul time," the system must have the ability to block railway traffic to one or more specified track sections in any of said plural railways constituting said railway network.

299. Accordingly, Amtrak's AMTEC system and/or other similar system includes "a processor for controlling a plurality of track sections in the railway network, wherein each track section is associated with a corresponding interlock and is disposed in any of said plural railways of said railway network that is managed by centralized control operation from the railway control apparatus, the processor controlling, by said centralized control operation, one or more interlocks amongst the plurality of railway interlocks dispersed in said plural railways of said railway network, to block railway traffic to one or more specified track sections."

300. Amtrak's AMTEC system and/or other similar system includes "a memory device

storing computer-executable instructions."

301. According to Amtrak's 2019 FY plan, it has implemented an enhanced employee protection system (EEPS) that operates by "provid[ing] roadway workers with an authorization code that corresponds to the blocking protection applied in the CETC control system."[157] The 2019 FY plan further specifies purchasing "EEPS mobile devices for roadway workers."[158]

All Other Amtrak Programs/Projects – Scopes	FY19 Proposed Budget
C.EN.101714. CETC AMTRAK SYSTEM-MOFW ENHANCED EMPLOYEE PROTECTION SYSTEM. Implement a system to enhance roadway worker protection when working on track under foul time or track out of service. The system will provide roadway workers with an authorization code that corresponds to the blocking protection applied in the CETC control system. Removal of the protection by the CETC train dispatcher will require the authorization code be provided by the roadway worker. The system will utilize modifications to the CETC System platform functionality and mobile devices assigned to roadway workers. Deliverables: • EEPS operating practices documentation; • Modification to each CETC System to provide EEPS functionality: - Wilmington CETC (Mid-Atlantic Division) - Boston CETC (NH to Boston, Springfield Line and MBTA Lines) - NY CETC West - PSCC - CETC Hudson-Albany Line • EEPS mobile devices for roadway workers; • Training program for roadway workers and dispatchers; • Operations management plans and procedures to be used after system acceptance;	$224,007

302. In order to provide the railway workers with an authorization code to their EEPS mobile devices, Amtrak's AMTEC system must include a memory device with the ability to store computer-executable instructions.

303. Amtrak budgeted an additional $224,007 as FY19 Proposed Budget for implementing a system to enhance railway worker protection:

[157] *2019 NEC One-Year Plan* at 233.
[158] *Id.*

All Other Amtrak Programs/Projects – Scopes	FY19 Proposed Budget
C.EN.101714. CETC AMTRAK SYSTEM-MOFW ENHANCED EMPLOYEE PROTECTION SYSTEM. Implement a system to enhance roadway worker protection when working on track under foul time or track out of service. The system will provide roadway workers with an authorization code that corresponds to the blocking protection applied in the CETC control system. Removal of the protection by the CETC train dispatcher will require the authorization code be provided by the roadway worker. The system will utilize modifications to the CETC System platform functionality and mobile devices assigned to roadway workers. Deliverables: • EEPS operating practices documentation; • Modification to each CETC System to provide EEPS functionality: - Wilmington CETC (Mid-Atlantic Division) - Boston CETC (NH to Boston, Springfield Line and MBTA Lines) - NY CETC West - PSCC - CETC Hudson-Albany Line • EEPS mobile devices for roadway workers; • Training program for roadway workers and dispatchers; • Operations management plans and procedures to be used after system acceptance;	$224,007

304. The EEPS mobile devices for railway workers are part of the deliverables that Amtrak has budgeted an additional $224,007 as FY19 Proposed Budget for implementing a system to enhance railway worker protection when working on track under foul time or track out of service. Moreover, with the advent in mobile technology, these EEPS mobile devices contain memory device capable of storing computer-executable instructions.[159]

305. Accordingly, Amtrak's AMTEC system and/or other similar system includes "a memory device storing computer-executable instructions."

306. Amtrak's AMTEC system and/or other similar system includes a railway control apparatus that executes computer-executable instructions to "receive a selection of at least one track section amongst the plurality of track sections."

307. According to Amtrak's 2019 FY plan, it has implemented or is in the process of implementing an enhanced employee protection system (EEPS) that operates by "provid[ing] roadway workers with an authorization code that corresponds to the blocking protection applied in the CETC control system. Removal of the protection by the CETC train dispatcher will require

[159] *See 2019 NEC One-Year Plan* at 233.

the authorization code to be provided by the roadway worker."[160]

All Other Amtrak Programs/Projects – Scopes	FY19 Proposed Budget
C.EN.101714. CETC AMTRAK SYSTEM-MOFW ENHANCED EMPLOYEE PROTECTION SYSTEM. Implement a system to enhance roadway worker protection when working on track under foul time or track out of service. The system will provide roadway workers with an authorization code that corresponds to the blocking protection applied in the CETC control system. Removal of the protection by the CETC train dispatcher will require the authorization code be provided by the roadway worker. The system will utilize modifications to the CETC System platform functionality and mobile devices assigned to roadway workers. Deliverables: • EEPS operating practices documentation; • Modification to each CETC System to provide EEPS functionality: - Wilmington CETC (Mid-Atlantic Division) - Boston CETC (NH to Boston, Springfield Line and MBTA Lines) - NY CETC West - PSCC - CETC Hudson-Albany Line • EEPS mobile devices for roadway workers; • Training program for roadway workers and dispatchers; • Operations management plans and procedures to be used after system acceptance;	$224,007

308. The EEPS system described in Amtrak's 2019 FY plan has been or will be implemented as part of the AMTEC system upgrade.

309. In order for the system to block railway traffic to one or more specified track sections, the system must be able to receive a selection of at least one track section amongst the plurality of track sections.

310. Accordingly, Amtrak's AMTEC system and/or other similar system includes a railway control apparatus that executes computer-executable instructions to "receive a selection of at least one track section amongst the plurality of track sections."

311. Amtrak's AMTEC system and/or other similar system includes a railway control apparatus that executes computer-executable instructions to "transmit a block signal to the corresponding interlock associated with the at least one selected track section, to place a block on the selected track section by said centralized control operation from the railway control apparatus."

---

[160] *Northeast Corridor One-Year Implementation Plan Fiscal Year 2019*, NEC COMMISSION 1, 233 (Oct. 2018), https://nec-commission.com/app/uploads/2018/10/NEC-One-Year-Plan-FY19.pdf.

312. AMTEC is a CETC system which, by definition, is configured for centralized control of traffic of a centrally controllable railway network including plural railways and a plurality of railway traffic interlocks dispersed in the plural railways and controls access to the railway tracks.[161] Further, the AMTEC system can place tracks in "foul time:"

All Other Amtrak Programs/Projects – Scopes	FY19 Proposed Budget
C.EN.101714. CETC AMTRAK SYSTEM-MOFW ENHANCED EMPLOYEE PROTECTION SYSTEM. Implement a system to enhance roadway worker protection when working on track under foul time or track out of service. The system will provide roadway workers with an authorization code that corresponds to the blocking protection applied in the CETC control system. Removal of the protection by the CETC train dispatcher will require the authorization code be provided by the roadway worker. The system will utilize modifications to the CETC System platform functionality and mobile devices assigned to roadway workers. Deliverables: • EEPS operating practices documentation; • Modification to each CETC System to provide EEPS functionality: - Wilmington CETC (Mid-Atlantic Division) - Boston CETC (NH to Boston, Springfield Line and MBTA Lines) - NY CETC West - PSCC - CETC Hudson-Albany Line • EEPS mobile devices for roadway workers; • Training program for roadway workers and dispatchers; • Operations management plans and procedures to be used after system acceptance;	$224,007

313. Foul time is defined as "a method of establishing working limits on controlled track in which a roadway worker is notified by the train dispatcher or control operator that no trains will operate within a specific segment of controlled track until the roadway worker reports clear of the track." 49 C.F.R. Part 214.7. The "specified segments" referred to in the rule is the "selected track section" referred to in this claim element.

314. Amtrak budgeted $224,007 as FY19 Proposed Budget for implementing an "enhanced employee protection system."

[161] *See A Guide to Key Railroad Terminology for the Northeast Corridor*, AMTRAK, https://media.amtrak.com/wp-content/uploads/2017/07/NEC-Terms-primer-v1.pdf (last visited April 3, 2022) ("Dispatchers use computerized Centralized Traffic & Electrification Control (CETC) systems to [centrally] control train movement over most of the NEC.").

All Other Amtrak Programs/Projects – Scopes	FY19 Proposed Budget
C.EN.101714. CETC AMTRAK SYSTEM-MOFW ENHANCED EMPLOYEE PROTECTION SYSTEM. Implement a system to enhance roadway worker protection when working on track under foul time or track out of service. The system will provide roadway workers with an authorization code that corresponds to the blocking protection applied in the CETC control system. Removal of the protection by the CETC train dispatcher will require the authorization code be provided by the roadway worker. The system will utilize modifications to the CETC System platform functionality and mobile devices assigned to roadway workers. Deliverables: • EEPS operating practices documentation; • Modification to each CETC System to provide EEPS functionality: - Wilmington CETC (Mid-Atlantic Division) - Boston CETC (NH to Boston, Springfield Line and MBTA Lines) - NY CETC West - PSCC - CETC Hudson-Albany Line • EEPS mobile devices for roadway workers; • Training program for roadway workers and dispatchers; • Operations management plans and procedures to be used after system acceptance;	$224,007

315. The portion of Amtrak's AMTEC system that places track sections in "foul time" is the ability "place a block on the selected track section" as recited in this claim element. Specifically, FRA regulations 49 C.F.R. § 214.323 defines "foul time" as "a method of establishing working limits on controlled track in which a roadway worker is notified by the train dispatcher or control operator that *no trains will operate within a specific segment of controlled track until the roadway worker reports clear of the track*." Because Amtrak, through its implementation of AMTEC, has the ability to place tracks in foul time, it must include the ability to "transmit a block signal to the corresponding interlock associated with the at least one selected track section, to place a block on the selected track section by said centralized control operation from the railway control apparatus."

316. According to Amtrak's 2019 FY plan, it has implemented an enhanced employee protection system (EEPS) that operates by "provid[ing] roadway workers with an authorization code that corresponds to the ***blocking protection*** applied in the CETC control system."[162] The referenced "blocking protection applied in the CETC control system [AMTEC]" is a reference to

[162] *2019 NEC One-Year Plan* at 233 (emphasis added).

the claimed ability to "place a block on the selected track section."

All Other Amtrak Programs/Projects – Scopes	FY19 Proposed Budget
C.EN.101714. CETC AMTRAK SYSTEM-MOFW ENHANCED EMPLOYEE PROTECTION SYSTEM. Implement a system to enhance roadway worker protection when working on track under foul time or track out of service. The system will provide roadway workers with an authorization code that corresponds to the blocking protection applied in the CETC control system. Removal of the protection by the CETC train dispatcher will require the authorization code be provided by the roadway worker. The system will utilize modifications to the CETC System platform functionality and mobile devices assigned to roadway workers. Deliverables: • EEPS operating practices documentation; • Modification to each CETC System to provide EEPS functionality: - Wilmington CETC (Mid-Atlantic Division) - Boston CETC (NH to Boston, Springfield Line and MBTA Lines) - NY CETC West - PSCC - CETC Hudson-Albany Line • EEPS mobile devices for roadway workers; • Training program for roadway workers and dispatchers; • Operations management plans and procedures to be used after system acceptance;	$224,007

317. Accordingly, Amtrak's AMTEC system and/or other similar system includes a railway control apparatus that executes computer-executable instructions to "transmit a block signal to the corresponding interlock associated with the at least one selected track section, to place a block on the selected track section by said centralized control operation from the railway control apparatus."

318. Amtrak's AMTEC system and/or other similar system includes a railway control apparatus that executes computer-executable instructions to "generate a secret code associated with the at least one selected track section."

319. Amtrak's AMTEC system implements an enhanced employee protection system (EEPS) that operates by "provid[ing] roadway workers with an authorization code that corresponds to the blocking protection applied in the CETC control system."[163] In order to provide the railway workers with an authorization code, Amtrak's AMTEC system must first generate the code.

[163] *2019 NEC One-Year Plan* at 233.

All Other Amtrak Programs/Projects – Scopes	FY19 Proposed Budget
C.EN.101714. CETC AMTRAK SYSTEM-MOFW ENHANCED EMPLOYEE PROTECTION SYSTEM. Implement a system to enhance roadway worker protection when working on track under foul time or track out of service. The system will provide roadway workers with an authorization code that corresponds to the blocking protection applied in the CETC control system. Removal of the protection by the CETC train dispatcher will require the authorization code be provided by the roadway worker. The system will utilize modifications to the CETC System platform functionality and mobile devices assigned to roadway workers. Deliverables: • EEPS operating practices documentation; • Modification to each CETC System to provide EEPS functionality: - Wilmington CETC (Mid-Atlantic Division) - Boston CETC (NH to Boston, Springfield Line and MBTA Lines) - NY CETC West - PSCC - CETC Hudson-Albany Line • EEPS mobile devices for roadway workers; • Training program for roadway workers and dispatchers; • Operations management plans and procedures to be used after system acceptance;	$224,007

320. Further, the *2019 NEC One-year-Plan* specifically notes that the AMTEC system "will provide roadway workers with an authorization code" which demonstrates that the AMTEC system "transmit[s] the removal code to the electronic contact address of the railway field worker."[164]

321. Accordingly, Amtrak's AMTEC system and/or other similar system includes a railway control apparatus that executes computer-executable instructions to "generate a secret code associated with the at least one selected track section."

322. Amtrak's AMTEC system and/or other similar system includes a railway control apparatus that executes computer-executable instructions to "transmit the secret code to a remote user terminal."

323. According to Amtrak's 2019 FY plan, it has implemented an enhanced employee protection system (EEPS) that operates by "provid[ing] roadway workers with an authorization code that corresponds to the blocking protection applied in the CETC control system."[165] The system notes that "removal of the protection by the CETC train dispatcher will require the

[164] *Id.*
[165] *2019 NEC One-Year Plan* at 233.

authorization code be provided by the roadway worker."[166]

All Other Amtrak Programs/Projects – Scopes	FY19 Proposed Budget
C.EN.101714. CETC AMTRAK SYSTEM-MOFW ENHANCED EMPLOYEE PROTECTION SYSTEM. Implement a system to enhance roadway worker protection when working on track under foul time or track out of service. The system will provide roadway workers with an authorization code that corresponds to the blocking protection applied in the CETC control system. Removal of the protection by the CETC train dispatcher will require the authorization code be provided by the roadway worker. The system will utilize modifications to the CETC System platform functionality and mobile devices assigned to roadway workers. Deliverables: • EEPS operating practices documentation; • Modification to each CETC System to provide EEPS functionality: - Wilmington CETC (Mid-Atlantic Division) - Boston CETC (NH to Boston, Springfield Line and MBTA Lines) - NY CETC West - PSCC - CETC Hudson-Albany Line • EEPS mobile devices for roadway workers; • Training program for roadway workers and dispatchers; • Operations management plans and procedures to be used after system acceptance;	$224,007

324. In order to ensure that removal of the protection by the CETC train dispatcher is not done prematurely, the AMTEC system requires the authorization code provided by the railway worker; the AMTEC system will then remove the block only upon entry of the removal code from the railway worker. To accomplish this, the system must be able to transmit the secret code to a remote user terminal, i.e., the EEPS mobile devices of the remote roadway worker.

325. Accordingly, Amtrak's AMTEC system and/or other similar system includes a railway control apparatus that executes computer-executable instructions to "transmit the secret code to a remote user terminal."

***

326. As direct and proximate result of Amtrak's infringement of the '115 patent, Railware has been injured and has been caused significant harm and financial damages.

327. On information and belief, Amtrak has also induced and continues to induce infringement of at least claim 20 of the '115 patent in violation of 35 U.S.C. § 271(b).

328. Amtrak induces its users, and/or developers of its systems to infringe at least

[166] *Id.*

claim 20 of the ’115 patent, and does so with the specific intent, by providing instructions, directions, information, and/or knowledge on how to use its systems and/or incorporate its systems into other products (including both the Collins Aerospace RailwayNet/AIM systems and the AMTEC systems or similar systems or methods). For example, Amtrak provides a “Management Trainee Program” through which trainees “work to support the Amtrak Train and Electrification Control (AMTEC) system by updating the track model software design and configuration work supporting new interlocking construction and reconfiguration of existing interlockings, as well as similar technical work to support the expansion of the AMTEC train dispatching system to improve train control functionality across the Northeast and Southeast Divisions.”[167]

329. As a direct and proximate result of Amtrak’s infringement of the ’115 patent, Railware has been injured and has been caused significant harm and financial damages.

330. Upon information and belief, Amtrak, without Railware’s permission, has been and is presently infringing at least claim 20 of the ’115 patent in violation of 35 U.S.C. § 271(c), by selling or offering to sell an apparatus for use in practicing the ’115 patent that is a material part of the invention to its customers, purchasers, users, and/or developers.

331. The apparatuses and systems sold or offered for sale by Amtrak have no substantial noninfringing uses. Further, they are not staple articles of commerce and constitute a material part of the invention. Thus, Amtrak knew or should have known that the combination for which their apparatuses and systems were made was protected by the ’115 patent.

332. As such, Amtrak has contributorily infringed and continue to infringe the ’115

[167] https://careers.amtrak.com/content/Management-Trainee-Program/?locale=en_US (last visited May 6, 2022).

patent, as set forth herein, knowing that the apparatuses or systems would be made or adapted for use in an infringing manner.

333. Railware has suffered and continues to suffer damages and irreparable harm as a result of Amtrak's past and ongoing infringement. Unless and until Amtrak's infringement is enjoined, Railware will continue to be damaged and irreparably harmed.

334. Railware is entitled to all remedies at law and equity including, but not limited to, an injunction against Amtrak's infringement of the '115 patent pursuant to 35 U.S.C. § 283.

335. Railware is entitled to damages for Amtrak's infringement of the '115 patent including, but not limited to, damages pursuant to 35 U.S.C. §§ 284 and 285.

JURY DEMAND

Railware respectfully requests a jury trial on all triable issues.

REQUEST FOR RELIEF

Railware respectfully asks that the Court enter judgment in its favor as follows:

A. Judgment in favor of Railware and against Amtrak on each cause of action alleged herein;

B. Finding that Amtrak has infringed and is infringing the Asserted Patents;

C. Finding that Amtrak's infringement of the Asserted Patents has been and continues to be willful;

D. Awarding Railware damages adequate to compensate it for Amtrak's past and present infringement, but in no event less than a reasonable royalty;

E. Awarding an accounting and supplemental damages for those acts of infringement committed by Amtrak subsequent to the discovery cut-off date in this action through the date Final Judgment is entered;

F. Ordering that damages for infringement of the Asserted patents be trebled as provided for by 35 U.S.C. § 284 for Amtrak's willful infringement of the Asserted Patents;

G. Finding that this case is exceptional;

H. Awarding Railware its attorneys' fees and costs, together with prejudgment and post-judgment interest;

I. A preliminary and permanent injunction against Amtrak's continued direct and indirect infringement;

J. To the extent injunctive relief is not awarded, awarding Railware damages adequate to compensate Railware for Amtrak's future infringement, but in no event less than a reasonable royalty; and

K. Any further relief that this Court deems just and proper.

Dated: June 30, 2022

Respectfully submitted,

ROBINS KAPLAN LLP

By: */s/ Bryan J. Vogel*

Bryan J. Vogel
BVogel@RobinsKaplan.com
Derrick J. Carman
DCarman@RobinsKaplan.com
1325 Avenue of the Americas
Suite 2601
New York, New York 10019
212-980-7400

Attorneys for Plaintiff
Railware, Inc.