Bryan J. Vogel (*pro hac vice* forthcoming)
BVogel@RobinsKaplan.com
Derrick Carman (*pro hac vice* forthcoming)
DCarman@RobinsKaplan.com
Travis K Waller (*pro hac vice* forthcoming)
TWaller@RobinsKaplan.com
ROBINS KAPLAN LLP
1325 Avenue of the Americas, Suite 2601
New York, New York 10019
Tel.: (212) 980-7400
Fax: (212) 980-7499

Li Zhu (Bar No. 302210)
LZhu@RobinsKaplan.com
ROBINS KAPLAN LLP
555 Twin Dolphin Drive, Suite 310
Redwood City, California 94065
Tel.: (650) 784-4040
Fax: (650) 784-4041

Attorneys for Plaintiff Railware, Inc.

ROBINS KAPLAN LLP
ATTORNEYS AT LAW
SILICON VALLEY

UNITED STATES DISTRICT COURT
NORTHERN DISTRICT OF CALIFORNIA
SAN JOSE DIVISION

RAILWARE, INC., PLAINTIFF, v. PENINSULA CORRIDOR JOINT POWERS BOARD D/B/A CALTRAIN, DEFENDANT.	Case No. **COMPLAINT** **DEMAND FOR JURY TRIAL**

Plaintiff Railware, Inc. ("Railware" or "Plaintiff") files this Complaint against Defendant Peninsula Corridor Joint Powers Board d/b/a Caltrain ("Caltrain" or "Defendant") and alleges as follows:

INTRODUCTION

1. This lawsuit concerns Caltrain's willful and deliberate infringement of Railware's patents.

2. Railware produces one of the premier centralized train traffic control products in

Wabtec v. Railware, Inc.
IPR2026-00135
EX2015 - 0001

ROBINS KAPLAN LLP
ATTORNEYS AT LAW
SILICON VALLEY

the world, Dispatch X. Included in Railware's Dispatch X is its patented safety technology, the Enhanced Employee Protection System ("EEPS"). Railware's Dispatch X with EEPS functionality is designed to ensure the safety of track workers (also referred to as "railway field workers," "roadway field workers," or the like) that must enter onto tracks to perform maintenance and repairs, as well as to prevent damage to equipment and/or property. During track work, trains are typically blocked from traversing sections of tracks that have railway field workers on them. But like all human-controlled systems, these systems are subject to operator error, which can result in serious injury or death to railway workers, as well as damage to equipment and/or property. Railware's patented safety technology places the power to remove a block on a specified segment(s) of track that prevent trains from being routed into the blocked area in the hands of the railway field worker on the tracks in the form of a code, thereby preventing the dispatcher/CTC system from prematurely, errantly or mistakenly lifting a block and ultimately saving lives and preventing injury of railway field workers, and preventing damage to equipment and/or property.

3. Railware holds, *inter alia*, a federally registered trademark in "EEPS," as well as a common law trademark in the EEPS and/or "Enhanced Employee Protection System" marks/designations.[1] Railware's first use of these marks in commerce was no later than November 2013.

4. Railware's products, including Railware's Dispatch X with EEPS functionality, are used on some of the busiest railroads in the country, including railroads of Metro-North Railroad and Long Island Rail Road. Millions of people rely on Railware's products to transport them safely every day.

PATENTS-IN-SUIT

5. Railware's owner, Ross Pirtle, spent considerable effort and investment developing the patented safety technology. As a result of this effort and investment, Mr. Pirtle was awarded

[1] Accordingly, any usage of the terms "enhanced employee protection system" or "EEPS" herein that is ascribed to any entity that is not Railware denotes that entity's usage of the inventions described and claimed in the Asserted Patents. No other entity, beyond Railware, has exclusive rights, title and/or legal ownership in or of the EEPS and/or "Enhanced Employee Protection System" marks/designations or any goodwill associated therewith, as applied to computer software, recorded, for use in railway traffic control systems and apparatus for safety of railway workers and property.

two United States patents covering this safety technology: U.S. Pat. No. 9,517,782 (the "'782 patent") (a copy of which is attached as **Exhibit A**) and 9,403,545 (the "'545 patent"). Mr. Pirtle assigned the '782 and '545 patents to Railware. The '545 patent has since been reissued as two reissue patents: (1) U.S. Reissue Pat. No. RE47,835 (the "'835 patent") (a copy of which is attached as **Exhibit B**); and (2) U.S. Reissue Pat. No. RE49,115 (the "'115 patent") (a copy of which is attached as **Exhibit C**) (the '782 patent, the '835 patent, and the '115 patent are collectively referred to herein as the "Asserted Patents").

PARTIES

6. Railware is a corporation organized and existing under the laws of New York with its principal place of business located in Hauppauge, NY. Railware is the owner of all right, title, and interest in the Asserted Patents.

7. Railware produces one of the premier centralized train traffic control products in the world, Dispatch X. Included in Dispatch X is Railware's EEPS functionality. Dispatch X with EEPS is used by some of the busiest railroads in the country, including railroads of Metro-North Railroad and Long Island Rail Road. Railware's owner is also the creator of the EEPS functionality, which saves railway workers' lives, prevents railway worker injury, and avoids the damage or destruction of costly railroad equipment, all by placing the power to lift a block on a section of track in the hands of the railway workers themselves that are on the track, thereby preventing the dispatcher/CTC system from prematurely, errantly or mistakenly lifting a block.

8. Peninsula Corridor Joint Powers Board d/b/a Caltrain is a Joint Powers Authority formed under California Government Code section 6500. At all times relevant to this Complaint, Peninsula Corridor Joint Powers Board has owned, operated, and done business under the name "Caltrain."

9. Caltrain has a headquarters located at 1250 San Carlos Avenue, San Carlos, California 94070.

10. Caltrain operates a mass-transit system within California, including in this District.

11. Caltrain, as a joint powers authority, is controlled both by California statutory law, as well as the joint powers agreement entered into by the members comprising the joint powers

ROBINS KAPLAN LLP
ATTORNEYS AT LAW
SILICON VALLEY

ROBINS KAPLAN LLP
ATTORNEYS AT LAW
SILICON VALLEY

authority.[2]

12. Caltrain is "legally and financially independent from its three member agencies, namely the San Mateo County Transit District (District), the Santa Clara Valley Transportation Authority (VTA), and the City and County of San Francisco (CCSF), and is not a component unit of any other organization."[3]

13. Caltrain Board members are appointed by various elected officials from the respective member agencies.[4]

14. Caltrain may, *inter alia*, enter into contracts and sue or be sued in its own name.[5]

15. Funding for the general operation of Caltrain is shared amongst the member entities.[6]

16. The debts and obligations, including the defense of any legal claims, of Caltrain are born by Caltrain.[7]

17. The State of California is not directly liable for the debts of liabilities of Caltrain.[8]

18. The majority of Caltrain's operating budget is funded by fares, commercial revenue, and private and public investment.[9]

JURISDICTION AND VENUE

19. **Jurisdiction**. This Court has subject matter jurisdiction of the action pursuant to the patent laws of the United States, 35 U.S.C. § 1 *et seq.*, and pursuant to 28 U.S.C. § 1338 because Railware's claims against Caltrain both arise out of the patent laws of the United States

---

[2] Cal. Gov't Code § 6503.

[3] PENINSULA CORRIDOR JOINT POWERS BOARD, ANNUAL COMPREHENSIVE FINANCIAL REPORT (FISCAL YEARS ENDED JUNE 30, 2023 AND 2022) at ii (available at https://www.caltrain.com/media/32501); Cal. Gov't Code § 6507 (Caltrain is "a public entity separate from the parties to the agreement."); Joint Powers Agreement Peninsula Corridor Project § 4 (dated Oct. 3, 1996) ("JPA Agreement") ("There is hereby created the JPB as a public entity separate and apart from CCSF, SCVTA and SamTrans, or any current combination thereof. . . .") (available at https://www.caltrain.com/media/2079/download?inline).

[4] JPA § 4.

[5] Cal. Gov't Code § 6508; JPA Agreement § 5.

[6] JPA Agreement § 7.

[7] JPA Agreement §§ 15, 16.

[8] *Id.*

[9] Peninsula Corridor Joint Powers Board Statement Of Revenue And Expense Adopted Operating Budgets Fiscal Years 2024 & 2025 (available at https://www.caltrain.com/media/30699/); PENINSULA CORRIDOR JOINT POWERS BOARD, ANNUAL COMPREHENSIVE FINANCIAL REPORT (FISCAL YEARS ENDED JUNE 30, 2023 AND 2022) at 8-9 (available at https://www.caltrain.com/media/32501).

ROBINS KAPLAN LLP
ATTORNEYS AT LAW
SILICON VALLEY

and raise a federal question.

20. This Court has personal jurisdiction over Caltrain at least because Caltrain owns and/or operates trains and significant portions of track in this District, and the allegations of infringement that give rise to this Complaint stem from Caltrain's activities in this District.

21. **Venue.** Venue is proper in this judicial district pursuant to 28 U.S.C. § 1400(b) because, as alleged herein, Caltrain is a resident of this judicial district. Additionally, Caltrain has committed acts of infringement in this District, and Caltrain maintains a regular and established place of business in this District. Specifically, Caltrain maintains a regular and established place of business at 585 Lenzen Avenue, San Jose, California 95126, via its operation of a control center known as the Central Equipment & Maintenance Facility ("CEMOF").[10]

22. Caltrain has committed acts of infringement in this District. Caltrain's operation of its dispatch system at, at least, its San Jose CEMOF control center, has infringed and continues to infringe the Asserted Patents in this District as set forth herein. Specifically, Caltrain has operated and/or continues to operate one or both of Westinghouse Air Brake Technologies Corporation's ("Wabtec") RailwayNet℠ and/or Advanced Information Management ("AIM") platforms (formerly Collins Aerospace ARINC RailwayNet℠ or AIM platform) with an EEPS and/or EEPS-like functionality and/or another same or similar systems or methods. Operation of these systems or methods, as implemented by Caltrain, including in this District, constitutes infringement of the Asserted Patents as set forth herein.

23. **Divisional Assignment**. Assignment to the San Jose Division is proper pursuant to Civil L.R. 3-2(c) and (e) because a substantial part of the events or omissions giving rise to the claim occurred at the CEMOF dispatch center, which is located in Santa Clara county.

FACTUAL ALLEGATIONS

A. Railware and its Patented Technology

24. Railware provides one of the premier centralized train traffic control products in the world, Dispatch X. Railware's products are used by some of the busiest railroads in the country,

[10] *See Central Equipment & Maintenance Facility (CEMOF)*, CALTRAIN, https://www.caltrain.com/projects/central-equipment-maintenance-facility-cemof (last visited July 7, 2025).

ROBINS KAPLAN LLP
ATTORNEYS AT LAW
SILICON VALLEY

including to direct trains at Grand Central Station and New York Penn Station. Railware's products are the industry standard for traffic control and operations management. Dispatch X provides customers with high-definition graphics and point and click usability. It is scalable for everything from a local control panel on a single interlocking to an entire railroad. Railware supports all railroad protocols so customers can communicate with systems of any complexity in one high resolution, graphic interface.

25. Included in Railware's Dispatch X is its patented EEPS functionality. Railware's Dispatch X with EEPS was developed by Railware's owner and inventor on the Asserted Patents, Ross Pirtle, to save railway field workers' lives and prevent injury of railway field workers, as well as prevent damage to equipment and/or property.

26. Many modern railroads control the movement of trains through a railway network using a centralized system known as centralized traffic control ("CTC"). CTC systems are used for monitoring, tracking, and operating trains traversing tracks throughout a network. CTC systems are controlled by train dispatchers. CTC systems typically include, among other front-end and back-end components, one or more control consoles that display various pieces of information, such as track conditions, train traffic, and scheduling. Through interactions with the control console, the dispatcher can view and control the movement of trains throughout the railway network. Movement of trains within a sector of track is typically governed by interlocking signals, which are controlled by the dispatcher via interactions with a control console.

27. CTC systems are generally made up of a combination of both hardware components and software components. The hardware components utilized can include items such as computers, computer monitors, databases, servers, processors, keyboards, mobile devices, kiosks, and the like. The software components include the software that is run on these various hardware components to achieve the monitoring, tracking, and train operation functions critical to the aims of the CTC system. An example of such a software is Railware's Dispatch X.

28. CTC systems also typically utilize a network, which can include, for example, data networks, cellular networks, internet networks, radio networks, and the like, and any combination thereof. This network is typically configured to facilitate exchanges between the various hardware

ROBINS KAPLAN LLP
ATTORNEYS AT LAW
SILICON VALLEY

and/or software components of the CTC system, as well as to facilitate communications between the individuals working in the railway network, such as dispatchers, railway field workers, and the like.

29. When railway tracks require maintenance, railway field workers must physically enter the track area to perform the necessary maintenance. Entering an active track area poses grave risks to the railway field workers, who are defenseless against train traffic. Over time, various safety systems were developed, such as alarm systems that alerted railway workers to incoming train traffic, ideally allowing them time to vacate the track area before the train approached. These systems proved inadequate in protecting railway field workers.

30. As one example, using the CTC system, the dispatcher could remotely control the tracks used by trains.[11] This remote control enabled the remote dispatcher to "block" sections of track and to temporarily reroute trains away from blocked track sections that were being worked on by railway field workers.[12] But these systems suffered from certain drawbacks.[13] Specifically, the blocking of track sections was controlled entirely by the remote dispatcher.[14] Human error could and did lead to blocks being removed prematurely, errantly, or mistakenly by the dispatcher, such as either because the dispatcher falsely believed that the work was complete, or because the dispatcher intended to remove a different block and mistakenly removed a block on a track section where railway field workers were still working.[15]

31. Other examples of inadequate safety precautions include NORAC's Operating Rules, including the "Form D" control system. NORAC's Operating Rules have been adopted by numerous railroads and have existed since the mid-1980's.[16] "Form D" has been an integral part of NORAC's Operating Rules since at least the early 1990's. A "Form D" contains "written authorization(s), restriction(s), or instruction(s) issued by the Dispatcher to specified

[11] *See* '782 patent at 1:48-62.
[12] *Id.* at 5:50-54.
[13] *Id.* at 2:27-37.
[14] *Id.* at 1:46-47.
[15] *See id.* at 2:27-37.
[16] *See generally* NORAC Operating Rules, 10th ed., (Nov. 6, 2011) (available at https://www.hubdiv.org/docs/signaling/NORAC.pdf).

ROBINS KAPLAN LLP
ATTORNEYS AT LAW
SILICON VALLEY

individuals."[17] These instructions can include a "Form D Line 4," which is used when "removing a track from service."[18] The Operating Rules require the dispatcher to determine that "controlled signals leading to the affected track are in Stop position" prior to issuing a "Form D Line 4."[19] Similarly, prior to releasing a "Form D," the dispatcher ostensibly must take certain actions, including "contact the addressee(s) and state his intent to cancel the Form D . . ., state the Form D number and, date, the cancellation time and date, and his initials, [and] ensure that all cancellation information is repeated [by the addressee] correctly."[20]

32. Despite these protections, human errors and accidents continued to occur, such as those recognized in the Federal Railroad Administration's (FRA) Final Rule and in the Asserted Patents. Such errors included mistakes such as where "the train dispatchers did not maintain the required blocking devices."[21]

33. Consistent with the infirmities of prior systems discussed above, unfortunately, a tragic event occurred that gave rise to the inventions described and claimed in the Asserted Patents. In 2013, a Metro-North Railroad passenger train struck and killed several railway field workers in West Haven, Connecticut. This happened because a remote dispatcher mistakenly removed the block protection on the wrong railroad track (that appeared in close proximity on the control console to the block protection that should have been removed).

34. Immediately after the accident occurred, Metro-North Railroad (Railware's long-time customer) asked Railware's President, Ross Pirtle (the inventor on the Asserted Patents), to determine and assess the cause of this tragic accident. Mr. Pirtle conducted an investigation, and determined that the accident was caused due to the dispatcher—believing the track to be clear—routing a train on the track where the workers were still working, which resulted in the train striking the railway field workers on the track and tragically killing them. Mr. Pirtle developed his inventions that are described and claimed in the Asserted Patents to prevent this from happening

---

[17] *Id.* at 7.
[18] *Id.* at 52.
[19] *Id.*
[20] *Id.* at 72.
[21] Federal Railroad Administration, Railroad Workplace Safety; Roadway Worker Protection Miscellaneous Revisions (RRR), 81 Fed. Reg. 37840, 37859 (May 26, 2016) [hereinafter referred to as "RRR"].

ROBINS KAPLAN LLP
ATTORNEYS AT LAW
SILICON VALLEY

again. Specifically, Mr. Pirtle invented an unconventional network architecture for generating, transmitting, receiving and using a code that is associated with a block placed on a track by a dispatcher and that is transmitted to the railway field worker(s) that is working on the track, but otherwise is not readily available to the dispatcher. In order to remove the block on a track, the code must be returned to the CTC system, such as by the dispatcher receiving the code from the railway field worker, for example, through a radio transmission. By putting the power to lift a block in the hands of the railway field worker(s) working under its protection, Mr. Pirtle's patented inventions prevent errant unblocking of track(s) within the railway network and ultimately save lives, prevent injury, and prevent damage to equipment and/or property. Mr. Pirtle's inventions are implemented at some of the busiest railroads in the U.S., as well as implemented in Railware's train control software (Dispatch X), which would ultimately become a commercial embodiment of the Asserted Patents called EEPS (Enhanced Employee Protection System).

35. Railware's patented technology has received praise in the industry. For example, the Federal Railroad Administration ("FRA") issued Safety Advisory 2014-02 "to reemphasize the importance of clear communication and compliance with applicable rules and procedures regarding roadway worker authority limits on controlled track."[22] Therein, the FRA specifically stated "FRA recommends that railroads adopt one or more electronic technologies that may serve to fill the technology gap. Examples of such technology already in use include the following systems: Enhanced Employee Protection System [EEPS] . . . ," referring to Railware's commercial embodiment of its patented technology.[23]

36. As a result of Railware's and Mr. Pirtle's hard work and innovations, Railware's technology won the Federal Railroad Administration ("FRA") President's Award.

37. Ross Pirtle was awarded two U.S. patents for his inventions: the '782 patent and the '545 patent. The '545 patent has since been reissued as the '835 patent and the '115 patent. The '782 patent, the '835 patent, and the '115 each cover Railware's technology and products.

38. The '782 patent includes claims directed to methods and systems for railway

[22] DOT Roadway Worker Authority Limits Rule, 79 Fed. Reg. 70268 (2014).
[23] *Id*. at 70269.

ROBINS KAPLAN LLP
ATTORNEYS AT LAW
SILICON VALLEY

control. For example, in claim 5, the claimed method to enhance railway control to protect safety of railway workers on or near railway tracks comprises (1) configuring a mobile user device of a railway field worker to provide a device user interface to display information received via a network from a railway control apparatus and to permit the railway field worker to respond to prompts displayed thereon; (2) providing a terminal user interface on a terminal to permit a terminal user to request the railway control apparatus to place a block on one or more specified track sections to permit a railway field worker to enter the track sections while blocking railway traffic to said track sections; (3) generating by the railway control apparatus a release code and transmitting the release code to an electronic contact address accessible by the railway field worker via operation of the user interface of the user terminal; and (4) permitting the block to said one or more track sections to be removed by the railway control apparatus only upon receiving the release code from the user terminal in return.

39. The ’835 patent includes claims directed to methods and systems for centralized railway control. For example, in claim 19, the claimed method for controlling railway access using a railway traffic control apparatus of a centralized railway control system configured for centralized control of traffic of a centrally controllable railway network including plural railways and a plurality of railway traffic interlocks dispersed in said plural railways constituting said railway network comprises (1) providing a user interface of the railway traffic control apparatus, including a block placing part to place a block on one or more specified track sections in any of said plural railways constituting said railway network that is managed by centralized control operation from the railway traffic control apparatus, the railway traffic control apparatus controlling, by said centralized control operation, one or more interlocks amongst the plurality of railway traffic interlocks dispersed in said plural railways constituting said railway network, to block railway traffic to the specified track sections and thereby to permit a railway field worker to enter the track sections; (2) generating a removal code, determining an electronic contact address of the railway field worker by accessing a rail personnel contact database registering, for each railway personnel, electronic contact information of the railway personnel, and transmitting the removal code to the electronic contact address of the railway field worker; and (3) permitting the

ROBINS KAPLAN LLP
ATTORNEYS AT LAW
SILICON VALLEY

block to said one or more track sections to be removed only upon entry of the removal code by said centralized control operation from the railway traffic control apparatus.

40. The '115 patent includes claims directed to methods and systems for centralized railway control. For example, in claim 20, the claimed railway control apparatus for centralized control of a centrally controllable railway network including plural railways and a plurality of railway interlocks dispersed in said plural railways comprises (1) a processor for controlling a plurality of track sections in the railway network, wherein each track section is associated with a corresponding interlock and is disposed in any of said plural railways of said railway network that is managed by centralized control operation from the railway control apparatus, the processor controlling, by said centralized control operation, one or more interlocks amongst the plurality of railway interlocks dispersed in said plural railways of said railway network, to block railway traffic to one or more specified track sections; and (2) a memory device storing computer-executable instructions, wherein execution of the computer-executable instructions by the processor causes the railway control apparatus to: (a) receive a selection of at least one track section amongst the plurality of track sections; (b) transmit a block signal to the corresponding interlock associated with the at least one selected track section, to place a block on the selected track section by said centralized control operation from the railway control apparatus; (c) generate a secret code associated with the at least one selected track section; and (d) transmit the secret code to a remote user terminal.

B. Regulatory Requirements and Recommendations

41. On or about December 16, 1996, the Federal Railroad Administration ("FRA") promulgated 49 C.F.R. 214.319, which governs working limits on railroad tracks.

42. On or about November 25, 2014, the FRA issued Safety Advisory 2014-02 "to reemphasize the importance of clear communication and compliance with applicable rules and procedures regarding . . . [railway field worker] authority limits on controlled track."[24] In Safety Advisory 2014-02, the FRA specifically stated "FRA recommends that railroads adopt one or more electronic technologies that may serve to fill the technology gap. Examples of such technology

[24] DOT Roadway Worker Authority Limits Rule, 79 Fed. Reg. 70268 (2014).

ROBINS KAPLAN LLP
ATTORNEYS AT LAW
SILICON VALLEY

already in use include the following systems: Enhanced Employee Protection System [EEPS]. . . ."[25]

43. The FRA described one embodiment of Railware's commercial implementation (EEPS) of its patented technology as follows:

> when an RWIC secures a track authority, he or she is provided a code via a beeper-like device that is not provided to the dispatcher issuing the authority. The system is designed so that the dispatcher cannot remove the blocking devices that are preventing the clearing of the absolute signal until the RWIC provides him or her with the issued code. Thus, the dispatcher cannot remove the associated on-track safety provided by the authority without the knowledge and agreement of the RWIC.[26]

44. On or about June 10, 2016, the FRA issued a Final Rule amending 49 C.F.R. 214.319. Specifically, 49 C.F.R. 214.319(b) provides:

> (b) Each . . . railroad providing regularly scheduled intercity or commuter rail passenger transportation that utilizes controlled track working limits as a form of on-track safety (under §§ 214.321 through 214.323) in signalized territory shall:
>
> > (1) By July 1, 2017, evaluate its on-track safety program and identify an appropriate method(s) of providing redundant signal protections for . . .[railway] work groups who depend on a train dispatcher or control operator to provide signal protection in establishing controlled track working limits. For purposes of this section, redundant signal protections means risk mitigation measures or safety redundancies adopted to ensure the proper establishment and maintenance of signal protections for controlled track working limits until such working limits are released by the . . .[railway field] worker in charge. Appropriate redundant protections could include the use of various risk mitigation measures (or a combination of risk mitigation measures) such as technology, training, supervision, or operating-based procedures; or could include use of redundant signal protection, such as shunting, designed to prevent signal system-related incursions into established controlled track working limits; and
> >
> > (2) By January 1, 2018, specifically identify, implement, and comply with the method(s) of providing redundant protections in its on-track safety program.

45. Caltrain is a railroad subject to the provisions of 49 C.F.R. 214.319(b).

46. In the FRA's Section-by-Section Analysis that accompanied the June 10, 2016 rule change, the FRA specifically referred to Safety Advisory 2014-02 and its discussion of Railware's EEPS, concluding "FRA encourages railroads to use new technologies ***such as EEPS*** as they

---

[25] *Id.* at 70269.
[26] *Id.*

ROBINS KAPLAN LLP
ATTORNEYS AT LAW
SILICON VALLEY

become available to provide redundant signal protections for . . .[railway] work groups and to comply with new paragraph (b)."[27]

47. The "EEPS" technology referred to by the FRA is covered by the Asserted Patents.

48. Caltrain has followed and continues to follow the FRA's recommendations and has implemented technology claimed in the Asserted Patents into at least its CTC systems. Caltrain deploys its infringing system(s), including the patented technology of the Asserted Patents, wherever it provides centralized train control systems, including in California.

C. Caltrain's Notice of the Patents

49. Caltrain was made aware of its infringement of the Asserted Patents at least as of May 15, 2025.

50. More particularly, on May 15, 2025, a letter was sent to Caltrain stating that:

> It appears that Caltrain has implemented and/or is in the process of implementing safety technology covered by . . . [the Asserted Patents] into at least its CTC system(s) provided by Westinghouse Air Brake Technologies Corporation ("Wabtec") and/or other same or similar system or method. *See, e.g.*, Caltrain Railroad Company Train Collision with On-Track Equipment and Derailment and Fire, National Transportation Safety Board Track and Engineering Group Chairman Factual Report, RRD22MR007 at 58 (Sept. 9, 2022); Caltrain Passenger Train Collision with Hi-rail Construction Vehicles, National Transportation Safety Board, RIR-24-01 at 11 (Feb. 27, 2024).

51. Given this correspondence, Caltrain knew or should have known and received notice of the Asserted Patents at least as of May 15, 2025.

52. Further, assertion of infringement of only method claims of a patent does not implicate the Patent Act's marking provision (35 U.S.C. § 287). However, to the extent the marking statute does apply, since at least October 21, 2020, Railware has included the patent numbers of the Asserted Patents (1) in the header bar of Railware's Dispatch X system; and/or (2) on Railware's freely and publicly available website.[28] Accordingly, Caltrain has had constructive notice and knowledge of the Asserted Patents since at least October 21, 2020.

53. Moreover, in a September 8, 2022 report, Caltrain indicated that "[m]eetings with [Southeastern Pennsylvania Transportation Authority ("SEPTA")] and Wabtec (who recently

[27] DOT Roadway Worker Protection Final Rule, 81 Fed. Reg. 37839, 37861 (emphasis added).
[28] *EEPS with SURELOCK*, RAILWARE, http://railware.net/eeps.html (last visited July 7, 2025).

ROBINS KAPLAN LLP
ATTORNEYS AT LAW
SILICON VALLEY

purchased the Rockwell Collins dispatch system known as ARINC used at Caltrain) were held recently. The use of a single code for an RWIC to provide to the dispatcher is essentially 'turnkey.'"[29] SEPTA utilizes Railware's patented technology covered by the Asserted Patents in connection with its CTC systems. As Caltrain was holding meetings with SEPTA regarding its system, Caltrain knew or should have known of the systems used by SEPTA and their use of Railware's patented technology covered by the Asserted Patents.

54. Caltrain knew or should have known and received notice of Railware's patents that reissued from the '545 patent (*i.e.*, the '835 patent and the '115 patent) on at least their respective dates of issuance: February 4, 2020 for the '835 patent, and June 28, 2022 for the '115 patent. Caltrain knew or should have known and received notice of the '782 patent on at least its issue date: December 13, 2016.

55. Caltrain operates tracks alongside National Railroad Passenger Corporation d/b/a Amtrak ("Amtrak"), which also uses Railware's patented technology covered by the Asserted Patents in connection with its CTC systems.[30] Caltrain knew of should have known of the systems used by Amtrak and their use of Railware's patented technology covered by the Asserted Patents.

56. Railware filed suit against Amtrak for infringement of the Asserted Patents in relation to Amtrak's implementation of Railware's patented technology that Amtrak copied from New Jersey Transit and Metro-North and implemented in connection with its CTC systems. Accordingly, Caltrain also had actual or constructive knowledge and notice of the Asserted Patents at least as of June 15, 2022 (the filing date of the complaint against Amtrak). *See Railware Inc. v. National Railroad Passenger Corporation d/b/a Amtrak*, No. 1:22-cv-5013 (SDNY 2022).

57. Railware filed suit against Southeastern Pennsylvania Transportation Authority ("SEPTA") for infringement of the Asserted Patents in relation to SEPTA's implementation of

---

[29] *Caltrain Railroad Company Train Collision with On-Track Equipment and Derailment and Fire*, National Transportation Safety Board Track and Engineering Group Chairman Factual Report, RRD22MR007 at 58 (Sept. 9, 2022).

[30] CALTRAIN BUSINESS PLAN, FREQUENTLY ASKED QUESTIONS (FAQS) at 4 (Dec. 2019) (available at https://www.caltrain.com/media/11259/download?inline) ("Diridon Station: The existing San José Diridon Station is a major transit hub located within downtown San José. It is a historic station with transit service provided by Amtrak, Altamont Commuter Express, Caltrain, and VTA light rail and bus service.").

Railware's patented technology in connection with its CTC systems. Caltrain has discussed Railware's patented technology covered by the Asserted Patents with SEPTA.[31] Accordingly, Caltrain also had actual or constructive knowledge and notice of the Asserted Patents at least as of July 8, 2024 (the filing date of the complaint against SEPTA). *See Railware Inc. v. Southeastern Pennsylvania Transportation Authority*, No. 2:24-cv-02963 (EDPA 2024).

D. Caltrain's Infringement with the RailwayNet^{SM} system/AIM system with EEPS and/or EEPS-like functionality and/or Any Same or Similar Systems or Methods

58. Caltrain and/or its agents own and/or operate one or more control centers, including at least at CEMOF, located in this District at 585 Lenzen Avenue, San Jose, California 95126.[32] CEMOF "is the 'nerve center,' of the commuter railroad, where dispatchers direct and monitor train traffic between San Francisco and Gilroy."[33] This control center "controls all train movement on the corridor."[34] Caltrain "provides train service along a 77-mile route to 32 stations between San Francisco and Gilroy."[35]

59. Caltrain has used and/or currently uses a CTC system that it refers to internally as the "Rail Operations Control System" or "ROCS."[36] ROCS is Caltrain's internal nomenclature for its implementation of the RailwayNet^{SM} system with EEPS and/or EEPS-like functionality and/or the AIM system with EEPS and/or EEPS-like functionality or other same or similar systems or methods,[37] that was formerly provided to it by Rockwell Collins, Inc. – a subsidiary of Raytheon

---

[31] *Caltrain Railroad Company Train Collision with On-Track Equipment and Derailment and Fire*, National Transportation Safety Board Track and Engineering Group Chairman Factual Report, RRD22MR007 at 58 (Sept. 9, 2022).

[32] *Central Equipment & Maintenance Facility (CEMOF)*, CALTRAIN, https://www.caltrain.com/projects/central-equipment-maintenance-facility-cemof (last visited July 7, 2025).

[33] *Id.*

[34] *Caltrain: Behind the Scenes of a Major Service Disruption*, CALTRAIN, https://www.caltrain.com/rider-information/caltrain-behind-scenes-major-service-disruption (last visited July 7, 2025).

[35] Caltrain Business Plan: Glossary of Key Terms at 1 (2018) (available at https://caltrain.com/media/10973).

[36] ARINC MAINTENANCE AND SUPPORT SERVICES, JPB BOARD OF DIRECTORS at 2 (Sept.5, 2019) (available at https://www.caltrain.com/media/2443/download); MODERNIZATION PROGRAM PENINSULA CORRIDOR ELECTRIFICATION PROJECT (PCEP): JULY 2017 MONTHLY PROGRESS REPORT, CALTRAIN at 18-1 (July 31, 2017) (available at https://www.caltrain.com/media/616/download?inline); MODERNIZATION PROGRAM PENINSULA CORRIDOR ELECTRIFICATION PROJECT (PCEP): APRIL 2017 MONTHLY PROGRESS REPORT (April 30, 2017) at 17-1 (available at https://caltrain.com/media/613/download?inline).

[37] ARINC MAINTENANCE AND SUPPORT SERVICES, JPB BOARD OF DIRECTORS at 2 (Sept. 5, 2019) (available at https://www.caltrain.com/media/2443/download); MODERNIZATION PROGRAM PENINSULA CORRIDOR

Technology that did business as "Collins Aerospace" – that has since been acquired by Westinghouse Air Brake Technologies Corporation ("Wabtec").[38]

60. ARINC Incorporated ("ARINC") was the original provider of what would become the RailwayNet^{SM} system with EEPS and/or EEPS-like functionality and/or the AIM system with EEPS and/or EEPS-like functionality or same or similar systems used by Caltrain. In 2013, Rockwell Collins acquired ARINC. In 2018, United Technologies acquired Rockwell Collins. In 2020, Raytheon Technologies merged with United Technologies, and rebranded Rockwell Collins/ARINC as Collins Aerospace. In 2022, Collins Aerospace's ARINC rail solutions business segment was acquired by Wabtec.[39] This acquisition included the RailwayNet^{SM} system and/or the AIM system or same or similar systems used by Caltrain.[40]

61. ARINC provided "fully integrated train control and Positive Train Control (PTC), control center integration and customer information systems, [] cybersecurity and life-cycle management" services to "regional, short line, inter-city, commuter, subway and light rail systems across the United States and Canada."[41]

62. Likewise, Wabtec advertises that it provides, *inter alia*, "advanced train control

---

ELECTRIFICATION PROJECT (PCEP): JULY 2017 MONTHLY PROGRESS REPORT, CALTRAIN at 18-1 (July 31, 2017) (available at https://www.caltrain.com/media/616/download?inline); MODERNIZATION PROGRAM PENINSULA CORRIDOR ELECTRIFICATION PROJECT (PCEP): APRIL 2017 MONTHLY PROGRESS REPORT (April 30, 2017) at 17-1 (available at https://caltrain.com/media/613/download?inline); *Peninsula Corridor Electrification Project*, TYLIN, https://www.tylin.com/work/projects/peninsula-corridor-electrification-project (last visited July 7, 2025) ("We are also providing implementation management services to oversee the design, development, testing, and commissioning of the Office SCADA systems based on the Advanced Integration Management (AIM) system supplied by Wabtec (formerly ARINC), the system integrator.").

[38] *Advanced Information Management (AIM) Rail Dispatch*, WABTEC, https://www.wabteccorp.com/digital-intelligence/signaling-and-train-control/dispatch/advanced-information-management-aim-rail-dispatch (last visited July 7, 2025) (describing AIM); *RailwayNet Positive Train Control Communication Solution*, WABTEC, https://www.wabteccorp.com/digital-intelligence/signaling-and-train-control/communications/railwaynet-positive-train-control-communication-solution (last visited July 7, 2025) (describing RailwayNet^{SM}).

[39] *Wabtec Acquires Collins Aerospace's ARINC Rail Solutions Business to Extend Rail Optimization Portfolio*, WABTEC (June 16, 2022), https://www.wabteccorp.com/newsroom/press-releases/wabtec-acquires-collins-aerospace-s-arinc-rail-solutions-business-to-extend-rail-optimization-portfolio.

[40] *Advanced Information Management (AIM) Rail Dispatch*, WABTEC, https://www.wabteccorp.com/digital-intelligence/signaling-and-train-control/dispatch/advanced-information-management-aim-rail-dispatch (last visited July 7, 2025) (describing AIM); *RailwayNet Positive Train Control Communication Solution*, WABTEC, https://www.wabteccorp.com/digital-intelligence/signaling-and-train-control/communications/railwaynet-positive-train-control-communication-solution (last visited July 7, 2025) (describing RailwayNet^{SM}).

[41] *Wabtec Acquires Collins Aerospace's ARINC Rail Solutions Business to Extend Rail Optimization Portfolio*, WABTEC (June 16, 2022), https://www.wabteccorp.com/newsroom/press-releases/wabtec-acquires-collins-aerospace-s-arinc-rail-solutions-business-to-extend-rail-optimization-portfolio.

ROBINS KAPLAN LLP
ATTORNEYS AT LAW
SILICON VALLEY

solutions that combine electronic train management, virtual block signaling, satellite communication, and precise positioning into a comprehensive train control solution" and "integrated services including construction, material, engineering, system integration, track services, and turnkey solutions for CTC, CBTC, and PTC systems."[42]

63. Wabtec offers a number of products and/or systems that provide, either alone or in combination with other products, infringing functionality, including, but not limited to the RailwayNet^{SM} system with EEPS and/or EEPS-like functionality and/or the AIM system with EEPS and/or EEPS-like functionality or same or similar systems.

64. Caltrain's implementation and use of the RailwayNet^{SM} system with EEPS and/or EEPS-like functionality and/or the AIM system with EEPS and/or EEPS-like functionality or any same or similar systems or methods in connection with its rail network(s) infringes the Asserted Patents.

65. For example, with respect to the '782 patent, Caltrain's software and/or hardware systems practice the claimed method for (1) configuring a mobile user device of a railway field worker to provide a device user interface to display information received via a network from a railway control apparatus and to permit the railway field worker to respond to prompts displayed thereon; (2) providing a terminal user interface on a terminal to permit a terminal user of the terminal to request the railway control apparatus to place a block on one or more specified track sections to permit a railway field worker to enter the track sections while blocking railway traffic to said track sections; (3) generating by the railway control apparatus a release code and transmitting the release code to an electronic contact address accessible by the railway field worker via operation of the user interface of the user terminal; and (4) permitting the block to said one or more track sections to be removed by the railway control apparatus only upon receiving the release code from the user terminal in return, such that they infringe one or more claims of the '782 patent.

66. As a further example, with respect to the '835 patent, Caltrain's software and/or hardware systems practice the claimed method for controlling railway access using a railway

[42] *Signaling and Train Control*, WABTEC, https://www.wabteccorp.com/digital-intelligence/signaling-and-train-control (last visited July 7, 2025).

ROBINS KAPLAN LLP
ATTORNEYS AT LAW
SILICON VALLEY

ROBINS KAPLAN LLP
ATTORNEYS AT LAW
SILICON VALLEY

traffic control apparatus of a centralized railway control system configured for centralized control of traffic of a centrally controllable railway network including plural railways and a plurality of railway traffic interlocks dispersed in said plural railways constituting said railway network centralized railway control system including (1) providing a user interface of the railway traffic control apparatus, including a block placing part to place a block on one or more specified track sections in any of said plural railways constituting said railway network that is managed by centralized control operation from the railway traffic control apparatus, the railway traffic control apparatus controlling, by said centralized control operation, one or more interlocks amongst the plurality of railway traffic interlocks dispersed in said plural railways constituting said railway network, to block railway traffic to the specified track sections and thereby to permit a railway field worker to enter the track; (2) generating a removal code, determining an electronic contact address of the railway field worker by accessing a rail personnel contact database registering, for each railway personnel, electronic contact information of the railway personnel, and transmitting the removal code to the electronic contact address of the railway field worker; and (3) permitting the block to said one or more track sections to be removed only upon entry of the removal code by said centralized control operation from the railway traffic control apparatus, such that they infringe one or more claims of the ’835 patent.

67. As a further example, with respect to the ’115 patent, Caltrain’s software and/or hardware systems practice the claimed railway control apparatus for centralized control of a centrally controllable railway network including plural railways and a plurality of railway interlocks dispersed in said plural railways comprises (1) a processor for controlling a plurality of track sections in the railway network, wherein each track section is associated with a corresponding interlock and is disposed in any of said plural railways of said railway network that is managed by centralized control operation from the railway control apparatus, the processor controlling, by said centralized control operation, one or more interlocks amongst the plurality of railway interlocks dispersed in said plural railways of said railway network, to block railway traffic to one or more specified track sections; and (2) a memory device storing computer-executable instructions, wherein execution of the computer-executable instructions by the processor causes the railway

control apparatus to: (a) receive a selection of at least one track section amongst the plurality of track sections; (b) transmit a block signal to the corresponding interlock associated with the at least one selected track section, to place a block on the selected track section by said centralized control operation from the railway control apparatus; (c) generate a secret code associated with the at least one selected track section; and (d) transmit the secret code to a remote user terminal, such that they infringe one or more claims of the '115 patent.

68. Caltrain's implementation and use of the RailwayNet[SM] system with EEPS and/or EEPS-like functionality and/or the AIM system with EEPS and/or EEPS-like functionality and/or other same or similar system or methods includes enhanced employee protection functionality, which Caltrain refers to internally as an "Enhanced Employee Protection System[]."[43]

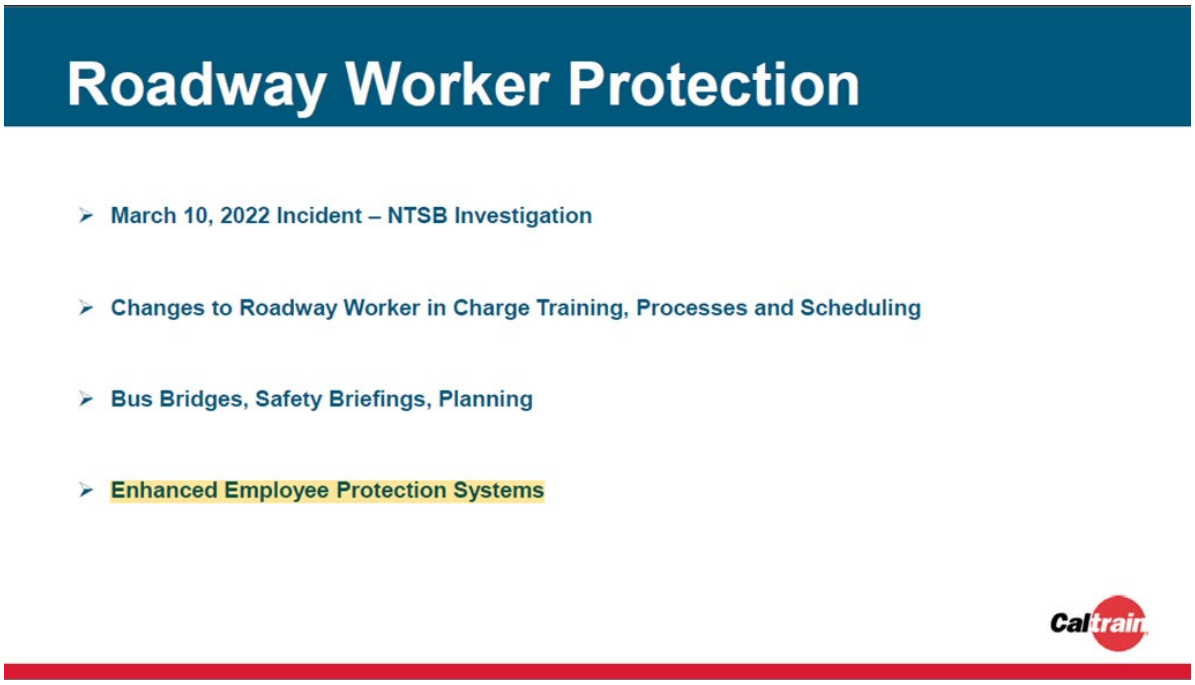

[43] CALTRAIN SAFETY BRIEFING (April 19, 2023) at 18 (available at https://www.caltrain.com/media/30177/download); PENINSULA CORRIDOR JOINT POWERS BOARD, ANNUAL COMPREHENSIVE FINANCIAL REPORT (FISCAL YEARS ENDED JUNE 30, 2023 AND 2022) at ix (available at https://www.caltrain.com/media/32501); PENINSULA CORRIDOR JOINT POWERS BOARD, ANNUAL COMPREHENSIVE FINANCIAL REPORT (FISCAL YEARS ENDED JUNE 30, 2024 AND 2023) at xiii (available at https://www.caltrain.com/media/34732); Project Monitoring Report (PMR) November 2024: Peninsula Corridor Electrification Project (PCEP) San Francisco to San Jose, CA at A-1 (2024) (available at https://www.caltrain.com/media/35145).

ROBINS KAPLAN LLP
ATTORNEYS AT LAW
SILICON VALLEY

ROBINS KAPLAN LLP
ATTORNEYS AT LAW
SILICON VALLEY

FIRST CLAIM FOR RELIEF
(Infringement of the '782 Patent)

69. Railware repeats and incorporates by reference all prior allegations of this Complaint as if fully set forth herein.

70. Railware is the owner by assignment of all right, title, and interest in and to the '782 patent.

71. The '782 patent is valid and enforceable.

72. Claim 5 of the '782 patent recites:

> A method to enhance railway control, to protect safety of railway workers on or near railway tracks, said method comprising:
>
> > configuring a mobile user device of a railway field worker to provide a device user interface to display information received via a network from a railway control apparatus and to permit the railway field worker to respond to prompts displayed thereon;
> >
> > providing a terminal user interface on a terminal to permit a terminal user of the terminal request the railway control apparatus to place a block on one or more specified track sections to permit a railway field worker to enter the track sections while blocking railway traffic to said track sections;
> >
> > generating by the railway control apparatus a release code and transmitting the release code to an electronic contact address accessible by the railway field worker via operation of the user interface of the user terminal; and
> >
> > permitting the block to said one or more track sections to be removed by the railway control apparatus only upon receiving the release code from the user terminal in return.

73. In violation of 35 U.S.C. § 271(a), Caltrain has infringed and continues to infringe one or more claims of the '782 patent by making, using, offering for sale, selling, and/or importing in or into the United States a system or method covered by the '782 patent, including, but not limited to, at least Caltrain's implementation and use of the RailwayNet^{SM} system with EEPS and/or EEPS-like functionality and/or the AIM system with EEPS and/or EEPS-like functionality or any same or similar systems or methods.[44]

74. Caltrain, through its implementation and use of the the RailwayNet^{SM} system with EEPS and/or EEPS-like functionality and/or the AIM system with EEPS and/or EEPS-like

[44] Further investigation may reveal that others of Caltrain's products and systems also directly or indirectly infringe at least claim 5 and/or other claims of the '782 patent.

functionality or any same or similar systems or methods, infringes at least claim 5 of the '782 patent.

75. Caltrain's implementation and use of the the RailwayNet[SM] system with EEPS and/or EEPS-like functionality and/or the AIM system with EEPS and/or EEPS-like functionality or any same or similar systems or methods practices a "method to enhance railway control, to protect safety of railway workers on or near railway tracks."

76. Caltrain's implementation and use of the RailwayNet[SM] system with EEPS and/or EEPS-like functionality and/or the AIM system with EEPS and/or EEPS-like functionality or any same or similar systems or methods includes an enhanced employee protection system, which protects the safety of railway workers on or near railway tracks.[45]

> Roadway Worker Protection (RWP) has also been a focus in the aftermath of a train collision incident in March 2022. Gaps were discovered in RWP programs that contributed to the San Bruno incident, and Caltrain has closed those gaps through revised RWP training; changed to a safer fouling distance – 10 feet from the rail and 10 feet from the overhead wires; improved processes for issuing track and time protection; and investment in a software based enhanced employee protection system that adds yet another layer of RWP.

77. Caltrain owns and/or operates one or more control centers, including the CEMOF located at 585 Lenzen Avenue, San Jose, California 95126.[46] Control centers are centralized railway control systems for controlling trains on certain sections of track.[47] Caltrain implements and uses the RailwayNet[SM] system with EEPS and/or EEPS-like functionality and/or the AIM system with EEPS and/or EEPS-like functionality or any same or similar systems or methods as a SaaS and/or IaaS—a software/infrastructure as a service—product that provides "full-featured network management and infrastructure, hardware, network, operating systems, and applications

---

[45] PENINSULA CORRIDOR JOINT POWERS BOARD, ANNUAL COMPREHENSIVE FINANCIAL REPORT (FISCAL YEARS ENDED JUNE 30, 2023 AND 2022) at ix (available at https://www.caltrain.com/media/32501); PENINSULA CORRIDOR JOINT POWERS BOARD, ANNUAL COMPREHENSIVE FINANCIAL REPORT (FISCAL YEARS ENDED JUNE 30, 2024 AND 2023) at xiii (available at https://www.caltrain.com/media/34732).

[46] *See Central Equipment & Maintenance Facility (CEMOF)*, CALTRAIN, https://www.caltrain.com/projects/central-equipment-maintenance-facility-cemof (last visited July 7, 2025).

[47] *See Central Equipment & Maintenance Facility (CEMOF)*, CALTRAIN, https://www.caltrain.com/projects/central-equipment-maintenance-facility-cemof (last visited July 7, 2025); *Caltrain: Behind the Scenes of a Major Service Disruption*, CALTRAIN, https://www.caltrain.com/rider-information/caltrain-behind-scenes-major-service-disruption (last visited July 7, 2025).

ROBINS KAPLAN LLP
ATTORNEYS AT LAW
SILICON VALLEY

for fault, performance, security and configuration management."[48]

78. The RailwayNet[SM] system with EEPS and/or EEPS-like functionality and/or the AIM system with EEPS and/or EEPS-like functionality or any same or similar systems or methods is advertised to help facilitate the increases in safety and reliability that train control systems provide.[49]

79. The RailwayNet[SM] system with EEPS and/or EEPS-like functionality and/or the AIM system with EEPS and/or EEPS-like functionality or any same or similar systems or methods, which Caltrain uses, improves rail safety.[50]

80. More particularly, "[t]his system refers to communication-based/processor-based train control technology designed to address a number of rail safety issues, including train-to-train collisions, over-speed derailments, incursions into established work-zone limits, and train movement through a main-line switch that is in an improper position."[51]

---

[48] ROCKWELL COLLINS INC., ARINC RAILWAYNET WHITE PAPER 6 (2016) (available at https://www.rockwellcollins.com/-/media/Files/Unsecure/Services-And-Support/Information-Management/ARINC-Rail/RailwayNet/ARINC-Rail_RailwayNet_white-paper.ashx) [hereinafter referred to as "White Paper"].

[49] *Amtrak signs nationwide contract for Rockwell Collins' ARINC RailwayNet[SM] Positive Train Control service*, COLLINS AEROSPACE (Sep. 6, 2017) (available at https://rockwellcollins.com/-/media/Files/Unsecure/Services-And-Support/Information-Management/ARINC-Rail/RC_Amtrak-Press-Release_09-06-17.ashx); *RailwayNet Positive Train Control Communication Solution*, WABTEC, https://www.wabteccorp.com/digital-intelligence/signaling-and-train-control/communications/railwaynet-positive-train-control-communication-solution (last visited July 7, 2025).

[50] PENINSULA CORRIDOR JOINT POWERS BOARD, ANNUAL COMPREHENSIVE FINANCIAL REPORT (FISCAL YEARS ENDED JUNE 30, 2023 AND 2022) at ix (available at https://www.caltrain.com/media/32501); *Caltrain Railroad Company Train Collision with On-Track Equipment and Derailment and Fire, National Transportation Safety Board Track and Engineering Group Chairman Factual Report*, RRD22MR007 at 58 (Sept. 9, 2022); *Caltrain Passenger Train Collision with Hi-rail Construction Vehicles, National Transportation Safety Board,* RIR-24-01 at 11 (Feb. 27, 2024).

[51] White Paper at 3.

ROBINS KAPLAN LLP
ATTORNEYS AT LAW
SILICON VALLEY

ROBINS KAPLAN LLP
ATTORNEYS AT LAW
SILICON VALLEY

81. Because Caltrain's implementation and use of the RailwayNet℠ system with EEPS and/or EEPS-like functionality and/or the AIM system with EEPS and/or EEPS-like functionality or any same or similar systems or methods increases rail safety through a "communication-based/processor-based train control technology," Caltrain practices a "method to enhance railway control, to protect safety of railway workers on or near railway tracks."

82. Caltrain's implementation and use of RailwayNet℠ system with EEPS and/or EEPS-like functionality and/or the AIM system with EEPS and/or EEPS-like functionality or any same or similar systems or methods further "configure[es] a mobile user device of a railway field worker to provide a device user interface to display information received via a network from a railway control apparatus and to permit the railway field worker to respond to prompts displayed thereon."

83. Caltrain's implementation and use of the RailwayNet℠ system with EEPS and/or EEPS-like functionality and/or the AIM system with EEPS and/or EEPS-like functionality or any same or similar systems or methods includes the utilization of mobile devices for railway field workers such that calls may be conducted between the railway field worker and the dispatcher to

"to release Track and Time Authority."[52]

84. Furthermore, Caltrain's implementation and use of the RailwayNet[SM] system with EEPS and/or EEPS-like functionality and/or the AIM system with EEPS and/or EEPS-like functionality or any same or similar systems or methods includes the use of "release codes" "for a [Roadway Worker In Charge]" which the railway field worker must "provide to the dispatcher" in order for a block to be released.[53]

c. Release "Codes"

i. Meetings with SEPTA and Wabtec (Who recently purchased the Rockwell Collins dispatch system known as ARINC used at Caltrain) were held recently. The use of a single code for an RWIC to provide to the dispatcher is essentially "turnkey."

Caltrain Passenger Train Collision with Hi-rail Construction Vehicles
RIR-24-01

1.7.3 Redundant Safety Protections

Caltrain instituted a redundant safety process for dispatchers requiring them to click a checkbox verifying the release of track and time authority before its release. They also acquired software that will only allow the dispatcher to release track and time authority after both the RWIC and one other authorized person in the work group has entered a special pin code into the system.

Caltrain now requires that a RWIC be physically within the limits of track and time authority when requesting and releasing authority. They also modified On Track Safety Rule 6.3.1 to require the track and time authority form to be initialed by at least one other roadway worker/contractor in the work group confirming that they are clear of the track.

[52] *Caltrain Passenger Train Collision with Hi-rail Construction Vehicles, National Transportation Safety Board*, RIR-24-01 at 11 (Feb. 27, 2024).

[53] *Caltrain Railroad Company Train Collision with On-Track Equipment and Derailment and Fire*, National Transportation Safety Board Track and Engineering Group Chairman Factual Report, RRD22MR007 at 58 (Sept. 9, 2022); *Caltrain Passenger Train Collision with Hi-rail Construction Vehicles, National Transportation Safety Board,* RIR-24-01 at 11 (Feb. 27, 2024); QUARTERLY PROGRESS REVIEW MEETING NO. 22: DECEMBER 5, 2022, PENINSULA CORRIDOR JOINT POWERS BOARD (JPB)/CALTRAIN at 4 (Dec. 19, 2022).

ROBINS KAPLAN LLP
ATTORNEYS AT LAW
SILICON VALLEY

- The safety task force formed after the March 10, 2022 incident continues to meet.
  - A new protocol has been developed that requires both the Roadway Worker in Charge (RWIC) and the contractor's foreman to sign off before track and time protection can be released.
  - A new electronic process has just been implemented that requires a specific electronic code to be transmitted to the dispatcher. Before protection can be released.

85. Caltrain's RailwayNet[SM] system with EEPS and/or EEPS-like functionality and/or the AIM system with EEPS and/or EEPS-like functionality or any same or similar systems or methods has implemented and used and continues to use a system whereby its CTC system permits users to respond to prompts over a network.

86. Caltrain's RailwayNet[SM] system with EEPS and/or EEPS-like functionality and/or the AIM system with EEPS and/or EEPS-like functionality or any same or similar systems or methods displays information received via a network from a railway control apparatus. For example, the railway control apparatus provides a release code to the railway field worker's (*e.g.*, the "RWIC") mobile device.

87. Caltrain's RailwayNet[SM] system with EEPS and/or EEPS-like functionality and/or the AIM system with EEPS and/or EEPS-like functionality or any same or similar systems or methods also specifies providing back-office infrastructure and messaging, including "[s]torage and delivery of crew and consist information, train IDs and clearances."[54]

88. Caltrain's implementation and use of the RailwayNet[SM] system with EEPS and/or EEPS-like functionality and/or the AIM system with EEPS and/or EEPS-like functionality or any same or similar systems or methods provides information (*e.g.,* a release code) to the railway worker's mobile device.[55] Such communication happens over a network. Further, the railway field worker is able to respond to prompts displayed on the mobile device in order to provide the CTC train dispatcher with the release code.

89. As noted above, Caltrain's implementation and use of the RailwayNet[SM] system

[54] White Paper at 7.

[55] *See, e.g., Caltrain Railroad Company Train Collision with On-Track Equipment and Derailment and Fire*, National Transportation Safety Board Track and Engineering Group Chairman Factual Report, RRD22MR007 at 58 (Sept. 9, 2022); *Caltrain Passenger Train Collision with Hi-rail Construction Vehicles, National Transportation Safety Board,* RIR-24-01 at 11 (Feb. 27, 2024).

ROBINS KAPLAN LLP
ATTORNEYS AT LAW
SILICON VALLEY

with EEPS and/or EEPS-like functionality and/or the AIM system with EEPS and/or EEPS-like functionality or any same or similar systems or methods includes the use of "release codes" or a "pin code" which the railway field worker must "provide to the dispatcher" in order for a block to be released.[56]

c. Release "Codes"

i. Meetings with SEPTA and Wabtec (Who recently purchased the Rockwell Collins dispatch system known as ARINC used at Caltrain) were held recently. The use of a single code for an RWIC to provide to the dispatcher is essentially "turnkey."

Caltrain Passenger Train Collision with Hi-rail Construction Vehicles
RIR-24-01

1.7.3 Redundant Safety Protections

Caltrain instituted a redundant safety process for dispatchers requiring them to click a checkbox verifying the release of track and time authority before its release. They also acquired software that will only allow the dispatcher to release track and time authority after both the RWIC and one other authorized person in the work group has entered a special pin code into the system.

Caltrain now requires that a RWIC be physically within the limits of track and time authority when requesting and releasing authority. They also modified On Track Safety Rule 6.3.1 to require the track and time authority form to be initialed by at least one other roadway worker/contractor in the work group confirming that they are clear of the track.

- The safety task force formed after the March 10, 2022 incident continues to meet.
  - A new protocol has been developed that requires both the Roadway Worker in Charge (RWIC) and the contractor's foreman to sign off before track and time protection can be released.
  - A new electronic process has just been implemented that requires a specific electronic code to be transmitted to the dispatcher. Before protection can be released.

90. Caltrain also provides its railway field workers with company issued mobile

[56] *See, e.g., Caltrain Railroad Company Train Collision with On-Track Equipment and Derailment and Fire*, National Transportation Safety Board Track and Engineering Group Chairman Factual Report, RRD22MR007 at 58 (Sept. 9, 2022); *Caltrain Passenger Train Collision with Hi-rail Construction Vehicles, National Transportation Safety Board,* RIR-24-01 at 11 (Feb. 27, 2024); QUARTERLY PROGRESS REVIEW MEETING NO. 22: DECEMBER 5, 2022, PENINSULA CORRIDOR JOINT POWERS BOARD (JPB)/CALTRAIN at 4 (Dec. 19, 2022).

ROBINS KAPLAN LLP
ATTORNEYS AT LAW
SILICON VALLEY

devices.[57]

91. Furthermore, the RailwayNet[SM] system with EEPS and/or EEPS-like functionality and/or the AIM system with EEPS and/or EEPS-like functionality or any same or similar systems or methods supports I-ETMS message flows, including communications with railway workers to communicate crew verification and mandatory directives.[58]

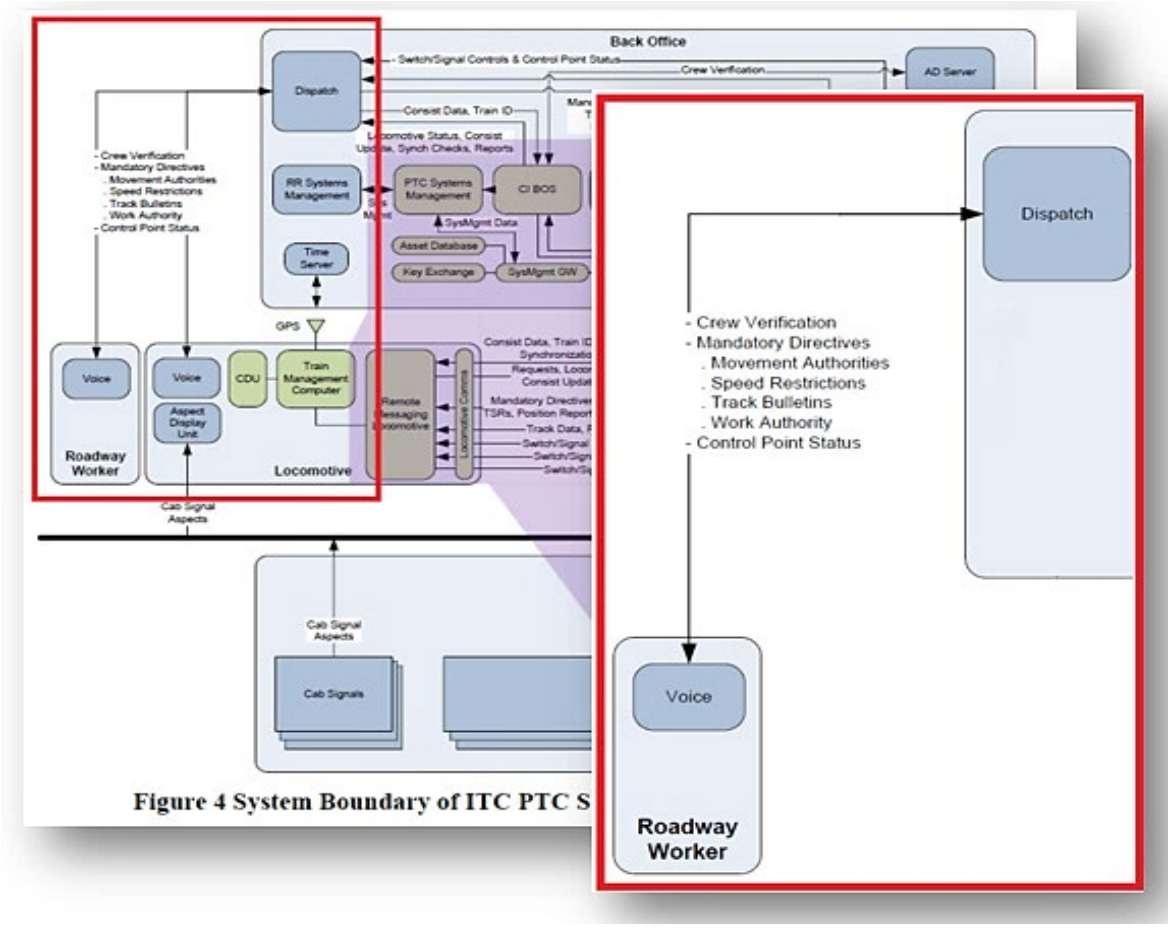

92. Likewise, Wabtec acknowledges that it offers I-ETMS supported packages.[59]

---

[57] *See, e.g.*, Roadway Worker Protection (RWP) Caltrain Training - Study Guide, Caltrain at 5 (available at https://www.caltrain.com/media/2098#:~:text=Fouling%20a%20track%2D%20is%20the%20placement%20of,field%20side%20of%20the%20nearest%20running%20rail.&text=safety%20at%20least%2015%20seconds%20prior%20to%20the%20train%20passing%20by%20the%20work%20zone); *Caltrain Passenger Train Collision with Hi-rail Construction Vehicles, National Transportation Safety Board*, RIR-24-01 at 5 (Feb. 27, 2024) ("About 9:58 a.m., the RWIC contacted the dispatcher by phone and released Track and Time Authority . . . .").

[58] *Positive Train Control Interoperability and Networking Research: Final Report*, Fed. Railroad Admin. (Dec. 2015) at 14 [hereinafter referred to as "Final Report"].

[59] *I-ETMS Positive Train Control (PTC) Communications Package*, WABTEC, https://www.wabteccorp.com/digital-intelligence/signaling-and-train-control/communications/i-etms-positive-train-control-ptc-communications-package (last visited July 7, 2025).

ROBINS KAPLAN LLP
ATTORNEYS AT LAW
SILICON VALLEY

Wabtec also advertises that RailwayNet^{SM} "offers reliable, tailored, and scalable PTC messaging. Utilizing VHF, cellular, Wi-Fi and MPLS, RailwayNet^{SM} PTC delivers initialization messages . . . ."[60]

93. Accordingly, Caltrain's implementation and use of RailwayNet^{SM} system with EEPS and/or EEPS-like functionality and/or the AIM system with EEPS and/or EEPS-like functionality or any same or similar systems or methods, by providing a technology infrastructure to send and receive messages (including "release codes" and/or "unique PINs") via a network and by providing mobile devices to rail workers, practices a method that "configure[es] a mobile user device of a railway field worker to provide a device user interface to display information received via a network from a railway control apparatus and to permit the railway field worker to respond to prompts displayed thereon."

94. Caltrain's implementation and use of RailwayNet^{SM} system with EEPS and/or EEPS-like functionality and/or the AIM system with EEPS and/or EEPS-like functionality or any same or similar systems or methods further provides "a terminal user interface on a terminal to permit a terminal user of the terminal request the railway control apparatus to place a block on one or more specified track sections to permit a railway field worker to enter the track sections while blocking railway traffic to said track sections."

95. Caltrain operates one or more control centers that are "the 'nerve center,' of the commuter railroad, where dispatchers direct and monitor train traffic between San Francisco and Gilroy"[61] and which "control[] all train movement on the corridor."[62]

96. Caltrain's control centers, examples of which are shown below, include a number of terminals through which train dispatchers control the movement of trains, including by placing blocks on specified track sections:

---

[60] *RailwayNet Positive Train Control Communication Solution*, WABTEC, https://www.wabteccorp.com/digital-intelligence/signaling-and-train-control/communications/railwaynet-positive-train-control-communication-solution (last visited July 7, 2025).

[61] *Central Equipment & Maintenance Facility (CEMOF)*, CALTRAIN, https://www.caltrain.com/projects/central-equipment-maintenance-facility-cemof (last visited July 7, 2025).

[62] *Caltrain: Behind the Scenes of a Major Service Disruption*, CALTRAIN, https://www.caltrain.com/rider-information/caltrain-behind-scenes-major-service-disruption (last visited July 7, 2025).

ROBINS KAPLAN LLP
ATTORNEYS AT LAW
SILICON VALLEY

ROBINS KAPLAN LLP
ATTORNEYS AT LAW
SILICON VALLEY

CEMOF[63]

97. The RailwayNet[SM] system with EEPS and/or EEPS-like functionality and/or the AIM system with EEPS and/or EEPS-like functionality or any same or similar systems or methods includes an "integration server and software" that "provides connectivity between the railroad IT systems and the hosted back-office components."[64] The integration server provides a terminal user interface on a terminal for use by the system dispatcher.

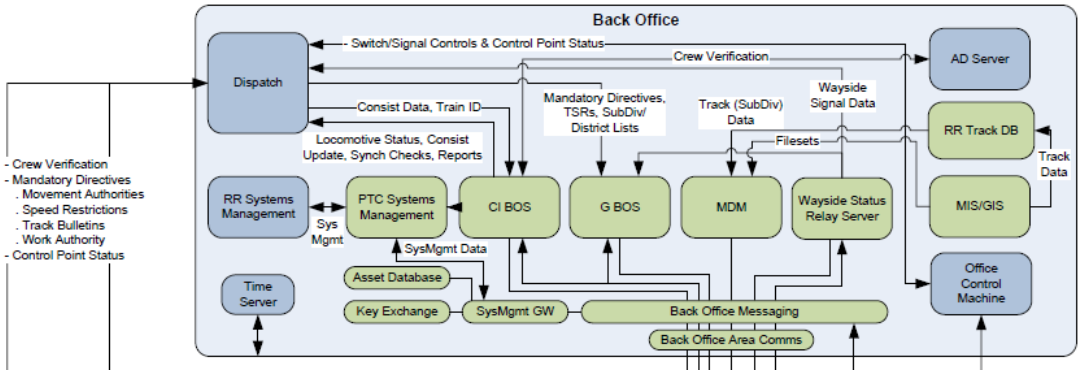

[63] *Peninsula Corridor Electrification Project*, TYLIN, https://www.tylin.com/work/projects/peninsula-corridor-electrification-project (last visited July 7, 2025).

[64] *See* White Paper at 8 (illustrating "AIM® integration server"); *see also RailwayNet Positive Train Control Communication Solution*, WABTEC, https://www.wabteccorp.com/digital-intelligence/signaling-and-train-control/communications/railwaynet-positive-train-control-communication-solution (last visited July 7, 2025).

AIM® integration server

The ARINC RailwayNet integrations server and software provides connectivity between the railroad IT systems and the hosted back-office components. The functions of this application include:

- Interface with customer's IT gateway
- Interface with back office
- Manage crew authentication through the customer's IT gateway
- Functions to assign train ID to trains based on the clearance number
- Functions to manage train consist through the customer's IT gateway
- Functions to track, display, and store events and alarms

Centralized Traffic Control and SCADA

Collins designs and integrates state-of-the-art rail control solutions using our ARINC Advanced Information Management (AIM®) platform. AIM serves as an end-to-end solution for all rail control requirements, including SCADA, Centralized Traffic Control, Positive Train Control (PTC) and control center integration. Highly flexible and feature-rich, AIM enables railroads to maximize operational efficiency, cost-effectiveness and safety, all while providing an environment protected by the latest tools and techniques in cybersecurity.

KEY AREAS OF EXPERTISE

- Train monitoring and control
- Automatic train tracking
- Automatic route setting/ automatic routing
- Automatic traffic regulation and schedule deviation
- Schedule management
- Integrated yard management
- Bulletins, authorities and restrictions management
- Employee in Charge (EIC) terminals
- Emergency Operating Procedures (EOP)
- Power planning
- Playback and simulation
- Data acquisition
- Interface integration

98. The RailwayNet[SM] system with EEPS and/or EEPS-like functionality and/or the AIM system with EEPS and/or EEPS-like functionality or any same or similar systems or methods, as implemented and used and continues to be used by Caltrain, provides the network connections and office applications required to exchange critical information among railroads. It is available on a subscription basis as hosted SaaS (software as a service) and IaaS (infrastructure as a service) solutions and messaging from the back office to the locomotive through VHF, cellular, and Wi-Fi is also available.[65]

99. The RailwayNet[SM] system with EEPS and/or EEPS-like functionality and/or the AIM system with EEPS and/or EEPS-like functionality or any same or similar systems or methods provides "train monitoring and control," "automatic route setting/automatic routing," "automatic traffic regulation," and "bulletins, authorities, and restrictions management," as shown, for

[65] *New from Rockwell Collins: Shared-network PTC platform*, RAILWAY AGE 14 (July 2016), https://issuu.com/railwayage/docs/july_2016_railway_age; *RailwayNet Positive Train Control Communication Solution*, WABTEC, https://www.wabteccorp.com/digital-intelligence/signaling-and-train-control/communications/railwaynet-positive-train-control-communication-solution (last visited July 7, 2025).

ROBINS KAPLAN LLP
ATTORNEYS AT LAW
SILICON VALLEY

example, in the image below.[66] One or more of these functionalities encompasses the claimed limitation "permit a terminal user of the terminal request the railway control apparatus to place a block on one or more specified track sections to permit a railway field worker to enter the track sections while blocking railway traffic to said track sections."

Centralized Traffic Control and SCADA

Collins designs and integrates state-of-the-art rail control solutions using our ARINC Advanced Information Management (AIM®) platform. AIM serves as an end-to-end solution for all rail control requirements, including SCADA, Centralized Traffic Control, Positive Train Control (PTC) and control center integration. Highly flexible and feature-rich, AIM enables railroads to maximize operational efficiency, cost-effectiveness and safety, all while providing an environment protected by the latest tools and techniques in cybersecurity.

KEY AREAS OF EXPERTISE

- Train monitoring and control
- Automatic train tracking
- Automatic route setting/ automatic routing
- Automatic traffic regulation and schedule deviation
- Schedule management
- Integrated yard management
- Bulletins, authorities and restrictions management
- Employee in Charge (EIC) terminals
- Emergency Operating Procedures (EOP)
- Power planning
- Playback and simulation
- Data acquisition
- Interface integration

100. The RailwayNet[SM] system with EEPS and/or EEPS-like functionality and/or the AIM system with EEPS and/or EEPS-like functionality or any same or similar systems or methods, as implemented and used and continues to be used by Caltrain, uses "track and time" in which "[b]efore granting track and time authority, the dispatcher must apply a 'block' through the dispatching system to prevent train movement into the limits."[67]

101. The RailwayNet[SM] system with EEPS and/or EEPS-like functionality and/or the

[66] *Intelligence-Based Rail Solutions*, COLLINS AEROSPACE, [https://web.archive.org/web/20211122013021/https://www.collinsaerospace.com/-/media/project/collinsaerospace/collinsaerospace-website/product-assets/marketing/r/rail/arinc-rail-solutions-for-passengers.pdf?rev=e7e5ddbff2de4154ba265f03e27f14d3] (last visited July 7, 2025); *see also Advanced Information Management (AIM) Rail Dispatch*, WABTEC, https://www.wabteccorp.com/digital-intelligence/signaling-and-train-control/dispatch/advanced-information-management-aim-rail-dispatch (last visited July 7, 2025).

[67] Caltrain Passenger Train Collision with Hi-rail Construction Vehicles, National Transportation Safety Board, RIR-24-01 at 11 (Feb. 27, 2024).

ROBINS KAPLAN LLP
ATTORNEYS AT LAW
SILICON VALLEY

ROBINS KAPLAN LLP
ATTORNEYS AT LAW
SILICON VALLEY

AIM system with EEPS and/or EEPS-like functionality or any same or similar systems or methods, as implemented and used and continues to be used by Caltrain, that places track sections in "foul time" necessarily "permit a terminal user of the terminal request the railway control apparatus to place a block on one or more specified track sections to permit a railway field worker to enter the track sections while blocking railway traffic to said track sections."

102. Specifically, FRA regulations 49 C.F.R. § 214.323 defines "foul time" as "a method of establishing working limits on controlled track in which a . . . [railway field worker] is notified by the train dispatcher or control operator that ***no trains will operate within a specific segment of controlled track until the . . .[railway field worker] reports clear of the track***." (emphasis added).

103. Caltrain's implementation and use of the RailwayNet^{SM} system with EEPS and/or EEPS-like functionality and/or the AIM system with EEPS and/or EEPS-like functionality or any same or similar systems or methods has the ability to take tracks out of service and/or place tracks in foul time.[68]

104. Because Caltrain, through its implementation and use of the RailwayNet^{SM} system with EEPS and/or EEPS-like functionality and/or the AIM system with EEPS and/or EEPS-like functionality or any same or similar systems or methods, has the ability to take tracks out of service and/or place tracks in foul time, it practices the claimed method "to place a block on one or more specified track sections to permit a railway field worker to enter the track sections while blocking railway traffic to said track sections."

105. In order to comply with and implement FRA's recommendations in its regulations (communication-based/processor-based train control technology designed to address a number of railway safety issues including train-to-train collisions, over-speed derailments, incursions into

[68] *See, e.g., Caltrain Railroad Company Train Collision with On-Track Equipment and Derailment and Fire, National Transportation Safety Board Track and Engineering Group Chairman Factual Report*, RRD22MR007 at 15 (Sept. 9, 2022) ("The RWIC was asked if he were aware about whether the men or equipment fouled main track one. . . ."); Roadway Worker Protection (RWP) Caltrain Training - Study Guide, Caltrain at 10 ("Form C -Track Out Of Service . . . The track is taken out of service and not available for trains to use unless the RWIC provides permission. . . .) (available at https://www.caltrain.com/media/2098#:~:text=Fouling%20a%20track%2D%20is%20the%20placement%20of,field%20side%20of%20the%20nearest%20running%20rail.&text=safety%20at%20least%2015%20seconds%20prior%20to%20the%20train%20passing%20by%20the%20work%20zone.).

ROBINS KAPLAN LLP
ATTORNEYS AT LAW
SILICON VALLEY

established work-zone limits, and train movement through a main-line switch that is in an improper position), the RailwayNet[SM] system with EEPS and/or EEPS-like functionality and/or the AIM system with EEPS and/or EEPS-like functionality or any same or similar systems or methods must be configured and used to place a block on one or more sections of railway track to prevent trains from traversing the one or more sections of railway track.[69]

106. Accordingly, by permitting the train dispatcher to take a track out of service and/or place a track under foul time, the RailwayNet[SM] system with EEPS and/or EEPS-like functionality and/or the AIM system with EEPS and/or EEPS-like functionality or any same or similar systems or methods, as implemented and used and continues to be used by Caltrain, "permit[s] a terminal user of the terminal request the railway control apparatus to place a block on one or more specified track sections to permit a railway field worker to enter the track sections while blocking railway traffic to said track sections."

107. Caltrain's implementation and use of the RailwayNet[SM] system with EEPS and/or EEPS-like functionality and/or the AIM system with EEPS and/or EEPS-like functionality or any same or similar systems or methods further generates "by the railway control apparatus a release code and transmit[s] the release code to an electronic contact address accessible by the railway field worker via operation of the user interface of the user terminal."

108. In a report submitted to the U.S. Department of Transportation regarding the RailwayNet[SM] system with EEPS and/or EEPS-like functionality and/or the AIM system with EEPS and/or EEPS-like functionality or any same or similar systems or methods, communications to the railway field worker are generated in the "back office."[70] This "back office" fulfills the claim element requirement for a railway control apparatus.[71]

---

[69] *See* Final Report at 14; *see also NEC One-Year Plan* 2019 at 233.
[70] Final Report at 11.
[71] *See* ARINC MAINTENANCE AND SUPPORT SERVICES, JPB BOARD OF DIRECTORS at 2 (Sept. 5, 2019) (available at https://www.caltrain.com/media/2443/download); MODERNIZATION PROGRAM PENINSULA CORRIDOR ELECTRIFICATION PROJECT (PCEP): JULY 2017 MONTHLY PROGRESS REPORT, CALTRAIN at 18-1 (July 31, 2017) (available at https://www.caltrain.com/media/616/download?inline); MODERNIZATION PROGRAM PENINSULA CORRIDOR ELECTRIFICATION PROJECT (PCEP): APRIL 2017 MONTHLY PROGRESS REPORT (April 30, 2017) at 17-1 (available at https://caltrain.com/media/613/download?inline).

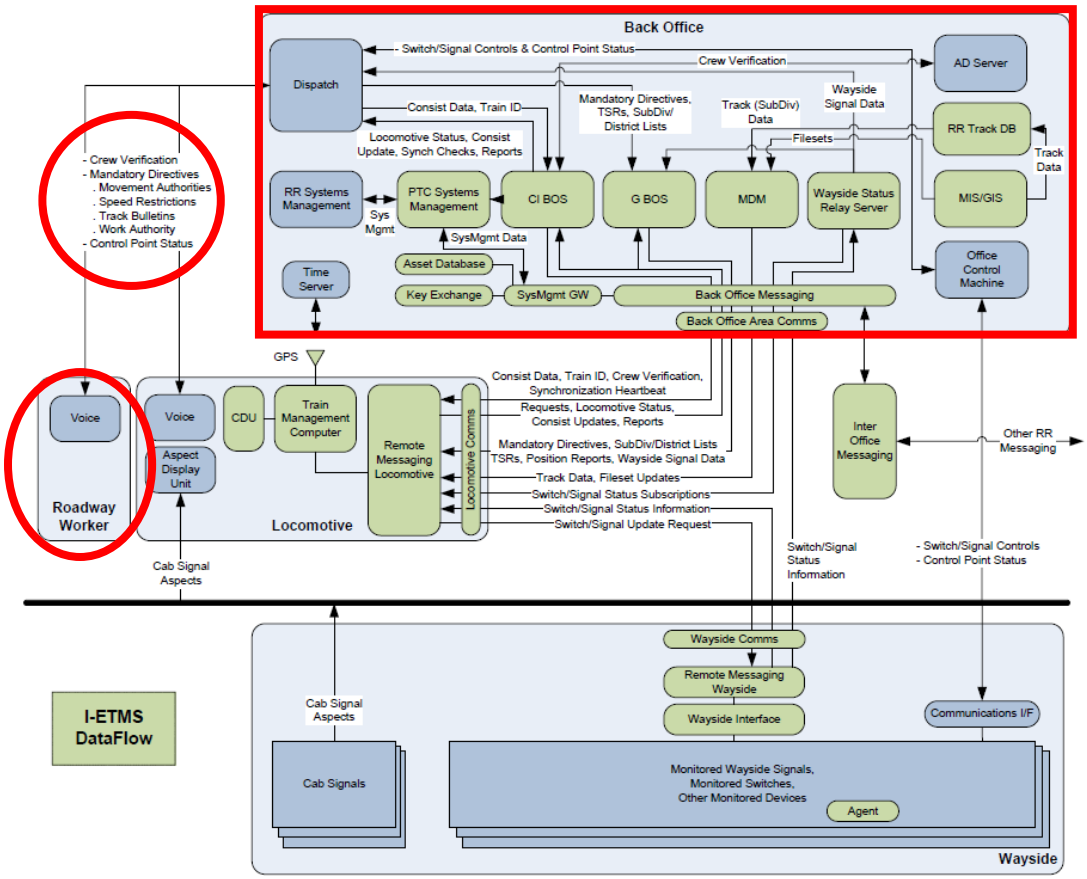

Figure 2 I-ETMS PTC Message Flows

109. The "back office" of Caltrain's implementation and use of the RailwayNet[SM] system with EEPS and/or EEPS-like functionality and/or the AIM system with EEPS and/or EEPS-like functionality or any same or similar systems or methods generates a release code which is transmitted to the railway field worker.[72]

[72] *See, e.g., Caltrain Railroad Company Train Collision with On-Track Equipment and Derailment and Fire*, National Transportation Safety Board Track and Engineering Group Chairman Factual Report, RRD22MR007 at 58 (Sept. 9, 2022); *Caltrain Passenger Train Collision with Hi-rail Construction Vehicles, National Transportation Safety Board,* RIR-24-01 at 11 (Feb. 27, 2024); QUARTERLY PROGRESS REVIEW MEETING NO. 22: DECEMBER 5, 2022, PENINSULA CORRIDOR JOINT POWERS BOARD (JPB)/CALTRAIN at 4 (Dec. 19, 2022).

ROBINS KAPLAN LLP
ATTORNEYS AT LAW
SILICON VALLEY

c. Release "Codes"

i. Meetings with SEPTA and Wabtec (Who recently purchased the Rockwell Collins dispatch system known as ARINC used at Caltrain) were held recently. The use of a single code for an RWIC to provide to the dispatcher is essentially "turnkey."

Caltrain Passenger Train Collision with Hi-rail Construction Vehicles
RIR-24-01

1.7.3 Redundant Safety Protections

Caltrain instituted a redundant safety process for dispatchers requiring them to click a checkbox verifying the release of track and time authority before its release. They also acquired software that will only allow the dispatcher to release track and time authority after both the RWIC and one other authorized person in the work group has entered a special pin code into the system.

Caltrain now requires that a RWIC be physically within the limits of track and time authority when requesting and releasing authority. They also modified On Track Safety Rule 6.3.1 to require the track and time authority form to be initialed by at least one other roadway worker/contractor in the work group confirming that they are clear of the track.

- The safety task force formed after the March 10, 2022 incident continues to meet.
  - A new protocol has been developed that requires both the Roadway Worker in Charge (RWIC) and the contractor's foreman to sign off before track and time protection can be released.
  - A new electronic process has just been implemented that requires a specific electronic code to be transmitted to the dispatcher. Before protection can be released.

110. In order for the code to be transmitted to the railway field worker, the "back office" of Caltrain's implementation and use of the RailwayNet^{SM} system with EEPS and/or EEPS-like functionality and/or the AIM system with EEPS and/or EEPS-like functionality or any same or similar systems or methods must retrieve the phone number of the railway field worker (*i.e.,* an "electronic contact address") and then transmit the release code to an electronic contact address accessible by the railway field worker.

111. The release code corresponds to the blocking protection applied in the CTC

ROBINS KAPLAN LLP
ATTORNEYS AT LAW
SILICON VALLEY

system.[73]

Caltrain Passenger Train Collision with Hi-rail Construction Vehicles
RIR-24-01

1.7.3 Redundant Safety Protections

Caltrain instituted a redundant safety process for dispatchers requiring them to click a checkbox verifying the release of track and time authority before its release. They also acquired software that will only allow the dispatcher to release track and time authority after both the RWIC and one other authorized person in the work group has entered a special pin code into the system.

Caltrain now requires that a RWIC be physically within the limits of track and time authority when requesting and releasing authority. They also modified On Track Safety Rule 6.3.1 to require the track and time authority form to be initialed by at least one other roadway worker/contractor in the work group confirming that they are clear of the track.

- The safety task force formed after the March 10, 2022 incident continues to meet.
  - A new protocol has been developed that requires both the Roadway Worker in Charge (RWIC) and the contractor's foreman to sign off before track and time protection can be released.
  - A new electronic process has just been implemented that requires a specific electronic code to be transmitted to the dispatcher. Before protection can be released.

112. The RailwayNet[SM] system with EEPS and/or EEPS-like functionality and/or the AIM system with EEPS and/or EEPS-like functionality or any same or similar systems or methods, as implemented and used and continues to be used by Caltrain, specifies providing back office infrastructure and messaging, including "[s]torage and delivery of crew and consist information, train IDs and clearances."[74] It further specifies enabling compliance with I-ETMS systems.[75] Because I-ETMS systems require communication of crew verification and employee authentication, Caltrain maintains electronic contact addresses of the railway field workers from a

[73] *See, e.g., Caltrain Railroad Company Train Collision with On-Track Equipment and Derailment and Fire*, National Transportation Safety Board Track and Engineering Group Chairman Factual Report, RRD22MR007 at 58 (Sept. 9, 2022); *Caltrain Passenger Train Collision with Hi-rail Construction Vehicles, National Transportation Safety Board,* RIR-24-01 at 11 (Feb. 27, 2024); QUARTERLY PROGRESS REVIEW MEETING NO. 22: DECEMBER 5, 2022, PENINSULA CORRIDOR JOINT POWERS BOARD (JPB)/CALTRAIN at 4 (Dec. 19, 2022).

[74] *See* White Paper at 7; *see also Advanced Information Management (AIM) Rail Dispatch*, WABTEC, https://www.wabteccorp.com/digital-intelligence/signaling-and-train-control/dispatch/advanced-information-management-aim-rail-dispatch (last visited July 7, 2025) (similar advertisements from Wabtec).

[75] *See* Final Report at 43.

ROBINS KAPLAN LLP
ATTORNEYS AT LAW
SILICON VALLEY

rail personnel contact database. The RailwayNet[SM] system with EEPS and/or EEPS-like functionality and/or the AIM system with EEPS and/or EEPS-like functionality or any same or similar systems or methods messaging functions also include "[k]ey exchange server," described as "[s]ecurity keys with data store."[76]

A summary of the ARINC RailwayNet PTC hosting service functionality is shown below.

Messaging functions	Description	Included
Back-office messaging	Message transmission for the railroad back office	•*
Inter-office messaging	Message transmission between assets and railroad back offices in support of train initialization	•*
Systems management gateway	Messaging systems management	•
Systems management	Remote asset monitoring and control	Optional
Back-office area communications	Communications infrastructure at the Annapolis facility in support of railroad remote asset connectivity via cellular and internet connections	•
Key exchange server	Security keys with data store	•

113. Accordingly, since Caltrain's implementation and use of the RailwayNet[SM] system with EEPS and/or EEPS-like functionality and/or the AIM system with EEPS and/or EEPS-like functionality or any same or similar systems or methods provides railway field workers with a release code that corresponds to the blocking protection applied in the control system, Caltrain practices the step of "generating by the railway control apparatus a release code and transmitting the release code to an electronic contact address accessible by the railway field worker via operation of the user interface of the user terminal."

114. Caltrain's implementation and use of the RailwayNet[SM] system with EEPS and/or EEPS-like functionality and/or the AIM system with EEPS and/or EEPS-like functionality or any same or similar systems or methods permits "the block to said one or more track sections to be removed by the railway control apparatus only upon receiving the release code from the user terminal in return."

[76] White Paper at 7.

ROBINS KAPLAN LLP
ATTORNEYS AT LAW
SILICON VALLEY

115. Caltrain's implementation and use of the RailwayNet[SM] system with EEPS and/or EEPS-like functionality and/or the AIM system with EEPS and/or EEPS-like functionality or any same or similar systems or methods includes an enhanced employee protection system, which requires the dispatcher to enter a "release code" or a "pin code" in order to remove the protection (*e.g.*, the foul time) from the track.[77]

> c. Release "Codes"
>
> i. Meetings with SEPTA and Wabtec (Who recently purchased the Rockwell Collins dispatch system known as ARINC used at Caltrain) were held recently. The use of a single code for an RWIC to provide to the dispatcher is essentially "turnkey."

> Caltrain Passenger Train Collision with Hi-rail Construction Vehicles
> RIR-24-01
>
> **1.7.3 Redundant Safety Protections**
>
> Caltrain instituted a redundant safety process for dispatchers requiring them to click a checkbox verifying the release of track and time authority before its release. They also acquired software that will only allow the dispatcher to release track and time authority after both the RWIC and one other authorized person in the work group has entered a special pin code into the system.
>
> Caltrain now requires that a RWIC be physically within the limits of track and time authority when requesting and releasing authority. They also modified On Track Safety Rule 6.3.1 to require the track and time authority form to be initialed by at least one other roadway worker/contractor in the work group confirming that they are clear of the track.

> - The safety task force formed after the March 10, 2022 incident continues to meet.
> - A new protocol has been developed that requires both the Roadway Worker in Charge (RWIC) and the contractor's foreman to sign off before track and time protection can be released.
> - A new electronic process has just been implemented that requires a specific electronic code to be transmitted to the dispatcher. Before protection can be released.

116. Moreover, the FRA has recognized that systems such as the RailwayNet[SM] system with EEPS and/or EEPS-like functionality and/or the AIM system with EEPS and/or EEPS-like

[77] *See, e.g., Caltrain Railroad Company Train Collision with On-Track Equipment and Derailment and Fire*, National Transportation Safety Board Track and Engineering Group Chairman Factual Report, RRD22MR007 at 58 (Sept. 9, 2022); *Caltrain Passenger Train Collision with Hi-rail Construction Vehicles, National Transportation Safety Board,* RIR-24-01 at 11 (Feb. 27, 2024); QUARTERLY PROGRESS REVIEW MEETING NO. 22: DECEMBER 5, 2022, PENINSULA CORRIDOR JOINT POWERS BOARD (JPB)/CALTRAIN at 4 (Dec. 19, 2022).

ROBINS KAPLAN LLP
ATTORNEYS AT LAW
SILICON VALLEY

ROBINS KAPLAN LLP
ATTORNEYS AT LAW
SILICON VALLEY

functionality or any same or similar systems or methods implemented and used and continues to be used by Caltrain complies with applicable recommended regulations (communication-based/processor-based train control technology designed to address a number of rail safety issues including train-to-train collisions, over-speed derailments, incursions into established work-zone limits, and train movement through a main-line switch that is in an improper position) by providing that the "dispatching system will not allow a dispatcher to release controlled track working limits until the RWIC affirmatively indicates via an electronic prompt that he or she is releasing working limits authority."[78]

117. Accordingly, Caltrain's implementation and use of the RailwayNet^{SM} system with EEPS and/or EEPS-like functionality and/or the AIM system with EEPS and/or EEPS-like functionality or any same or similar systems or methods thus permits "the block to said one or more track sections to be removed by the railway control apparatus only upon receiving the release code from the user terminal in return."

118. Therefore, Caltrain, through its implementation and use of the RailwayNet^{SM} system with EEPS and/or EEPS-like functionality and/or the AIM system with EEPS and/or EEPS-like functionality or any same or similar systems or methods has infringed and continues to infringe at least claim 5 of the '782 patent.

119. As direct and proximate result of Caltrain's infringement of the '782 patent, Railware has been irreparably injured and has been caused significant harm and financial damages.

120. Caltrain has also induced and continues to induce infringement of at least claim 5 of the '782 patent in violation of 35 U.S.C. § 271(b).

121. Caltrain induces its users, and/or developers of its systems or methods to infringe at least claim 5 of the '782 patent, and does so with the specific intent, by providing instructions, directions, information, and/or knowledge on how to use its systems and/or incorporate its systems or methods into other products (including the RailwayNet^{SM} system with EEPS and/or EEPS-like functionality and/or the AIM system with EEPS and/or EEPS-like functionality or any same or

[78] *RRR,* 81 Fed. Reg. at 37860.

similar systems or methods). For example, Caltrain instructs its own dispatchers on how to use the system to infringe.

122. Caltrain had notice of and was aware or should have been aware of its infringement of the ’782 patent on at least December 13, 2016, or at the latest by May 15, 2025.

123. Caltrain knew or should have known and received notice of the ’782 patent on at least its issue date: December 13, 2016.

124. Further, to the extent the marking requirements of 35 U.S.C. § 287 apply, Caltrain had constructive knowledge of the ’782 patent at least since October 21, 2020.

125. Further, Caltrain knew or should have known and received notice of the ’782 patent on at least June 15, 2022, which is the date Railware filed suit against Amtrak for infringement of the ’782 patent, or earlier considering the business relationship between Caltrain and Amtrak, and again on at least July 8, 2024, which is the date Railware filed suit against SEPTA for infringement of the ’782 patent, and again on the dates of any subsequent litigations filed by Railware regarding the Asserted Patents.

126. Further, Caltrain knew or should have known and received notice of the ’782 patent on at least September 8, 2022, which is the date Caltrain issued a report indicating that it had met with SEPTA regarding its CTC system, and discussed the “use of a single code for an RWIC to provide to the dispatcher.”

127. Further, Caltrain knew or should have known and received notice of the ’782 patent as of May 15, 2025, when Caltrain was sent a letter informing it of its infringement of the ’782 patent.

128. Caltrain’s continued infringement on or after any of these dates is in spite of the objectively high likelihood that its activities constitute infringement of a valid patent, and this risk was either known or so obvious that it should have been known to Caltrain. Thus, Caltrain’s continued infringement at least as of December 13, 2016, or at the latest May 15, 2025, is willful and deliberate.

129. Railware has suffered and continues to suffer damages and irreparable harm as a result of Caltrain’s past and ongoing infringement. Unless and until Caltrain’s infringement is

ROBINS KAPLAN LLP
ATTORNEYS AT LAW
SILICON VALLEY

enjoined, Railware will continue to be damaged and irreparably harmed.

130. Railware is entitled to all remedies at law and equity including, but not limited to, an injunction against Caltrain's infringement of the '782 patent pursuant to 35 U.S.C. § 283.

131. Railware is entitled to damages for Caltrain's infringement of the '782 patent including, but not limited to, damages pursuant to 35 U.S.C. §§ 284 and 285.

SECOND CLAIM FOR RELIEF
(Infringement of the '835 patent)

132. Railware repeats and incorporates by reference all prior allegations of this Complaint as if fully set forth herein.

133. Railware is the owner by assignment of all right, title, and interest in and to the '835 patent.

134. The '835 patent is valid and enforceable.

135. Claim 19 of the '835 patent recites:

> A method for controlling railway access using a railway traffic control apparatus of a centralized railway control system configured for centralized control of traffic of a centrally controllable railway network including plural railways and a plurality of railway traffic interlocks dispersed in said plural railways constituting said railway network, the method comprising:
>
> > providing a user interface of the railway traffic control apparatus, including a block placing part to place a block on one or more specified track sections in any of said plural railways constituting said railway network that is managed by centralized control operation from the railway traffic control apparatus, the railway traffic control apparatus controlling, by said centralized control operation, one or more interlocks amongst the plurality of railway traffic interlocks dispersed in said plural railways constituting said railway network, to block railway traffic to the specified track sections and thereby to permit a railway field worker to enter the track sections;
> >
> > generating a removal code, determining an electronic contact address of the railway field worker by accessing a rail personnel contact database registering, for each railway personnel, electronic contact information of the railway personnel, and transmitting the removal code to the electronic contact address of the railway field worker; and
> >
> > permitting the block to said one or more track sections to be removed only upon entry of the removal by said centralized control operation from the railway traffic control apparatus.

136. In violation of 35 U.S.C. § 271(a), Caltrain has infringed and continues to infringe one or more claims of the '835 patent by making, using, offering for sale, selling, and/or importing

in or into the United States a system or method covered by the '835 patent, including, but not limited to, at least Caltrain's implementation and/or use of the RailwayNet^{SM} system with EEPS and/or EEPS-like functionality and/or the AIM system with EEPS and/or EEPS-like functionality or any same or similar systems or methods.[79]

137. Caltrain's implementation and use of the RailwayNet^{SM} system with EEPS and/or EEPS-like functionality and/or the AIM system with EEPS and/or EEPS-like functionality or any same or similar systems or methods includes an enhanced employee protection functionality, which protects the safety of railway workers on or near railway tracks.[80]

> Roadway Worker Protection (RWP) has also been a focus in the aftermath of a train collision incident in March 2022. Gaps were discovered in RWP programs that contributed to the San Bruno incident, and Caltrain has closed those gaps through revised RWP training; changed to a safer fouling distance – 10 feet from the rail and 10 feet from the overhead wires; improved processes for issuing track and time protection; and investment in a software based enhanced employee protection system that adds yet another layer of RWP.

138. Caltrain, through its implementation and/or use of the RailwayNet^{SM} system with EEPS and/or EEPS-like functionality and/or the AIM system with EEPS and/or EEPS-like functionality or any same or similar systems or methods, infringes at least claim 19 of the '835 patent.

139. Caltrain's implementation and use of the RailwayNet^{SM} system with EEPS and/or EEPS-like functionality and/or the AIM system with EEPS and/or EEPS-like functionality or any same or similar systems or methods practices a "method for controlling railway access using a railway traffic control apparatus of a centralized railway control system configured for centralized control of traffic of a centrally controllable railway network including plural railways and a plurality of railway traffic interlocks dispersed in said plural railways constituting said railway network."

140. Caltrain owns and/or operates one or more control centers, including the CEMOF located at 585 Lenzen Avenue, San Jose, California 95126.[81] Control centers are centralized

---

[79] Further investigation may reveal that others of Caltrain's products and systems also directly or indirectly infringe at least claim 19 or other claims of the '835 patent.

[80] PENINSULA CORRIDOR JOINT POWERS BOARD, ANNUAL COMPREHENSIVE FINANCIAL REPORT (FISCAL YEARS ENDED JUNE 30, 2023 AND 2022) at ix (available at https://www.caltrain.com/media/32501).

[81] *See Central Equipment & Maintenance Facility (CEMOF)*, CALTRAIN, https://www.caltrain.com/projects/central-equipment-maintenance-facility-cemof (last visited July 7, 2025).

ROBINS KAPLAN LLP
ATTORNEYS AT LAW
SILICON VALLEY

railway control systems using methods to control access to railway tracks configured for centralized control of traffic of a centrally controllable railway network including plural railways and a plurality of railway traffic interlocks dispersed in said plural railways constituting said railway network.

141. Caltrain's control centers, examples of which are shown below, include a number of terminals through which train dispatchers control the movement of trains, including by placing blocks on specified track sections. The below images illustrate.

CEMOF[82]

142. Caltrain's control centers are "the 'nerve center,' of the commuter railroad, where dispatchers direct and monitor train traffic between San Francisco and Gilroy"[83] and "control[] all train movement on the corridor."[84]

143. The RailwayNet[SM] system with EEPS and/or EEPS-like functionality and/or the

[82] *Peninsula Corridor Electrification Project*, TYLIN, https://www.tylin.com/work/projects/peninsula-corridor-electrification-project (last visited July 7, 2025).
[83] *Central Equipment & Maintenance Facility (CEMOF)*, CALTRAIN, https://www.caltrain.com/projects/central-equipment-maintenance-facility-cemof (last visited July 7, 2025).
[84] *Caltrain: Behind the Scenes of a Major Service Disruption*, CALTRAIN, https://www.caltrain.com/rider-information/caltrain-behind-scenes-major-service-disruption (last visited July 7, 2025).

ROBINS KAPLAN LLP
ATTORNEYS AT LAW
SILICON VALLEY

AIM system with EEPS and/or EEPS-like functionality or any same or similar systems or methods provides "centralized traffic control," "train monitoring and control," "automatic route setting/automatic routing," "automatic traffic regulation," and "bulletins, authorities," and "restrictions management."[85]

Centralized Traffic Control and SCADA

Collins designs and integrates state-of-the-art rail control solutions using our ARINC Advanced Information Management (AIM®) platform. AIM serves as an end-to-end solution for all rail control requirements, including SCADA, Centralized Traffic Control, Positive Train Control (PTC) and control center integration. Highly flexible and feature-rich, AIM enables railroads to maximize operational efficiency, cost-effectiveness and safety, all while providing an environment protected by the latest tools and techniques in cybersecurity.

KEY AREAS OF EXPERTISE

- Train monitoring and control
- Automatic train tracking
- Automatic route setting/ automatic routing
- Automatic traffic regulation and schedule deviation
- Schedule management
- Integrated yard management
- Bulletins, authorities and restrictions management
- Employee in Charge (EIC) terminals
- Emergency Operating Procedures (EOP)
- Power planning
- Playback and simulation
- Data acquisition
- Interface integration

144. Caltrain has implemented and used and continues to use the RailwayNet[SM] system with EEPS and/or EEPS-like functionality and/or the AIM system with EEPS and/or EEPS-like functionality or any same or similar systems or methods.[86]

---

[85] *Intelligence-Based Rail Solutions*, COLLINS AEROSPACE, [https://web.archive.org/web/20211122013021/https://www.collinsaerospace.com/-/media/project/collinsaerospace/collinsaerospace-website/product-assets/marketing/r/rail/arinc-rail-solutions-for-passengers.pdf?rev=e7e5ddbff2de4154ba265f03e27f14d3] (last visited July 7, 2025); *see also Advanced Information Management (AIM) Rail Dispatch*, WABTEC, https://www.wabteccorp.com/digital-intelligence/signaling-and-train-control/dispatch/advanced-information-management-aim-rail-dispatch (last visited July 7, 2025).

[86] ARINC MAINTENANCE AND SUPPORT SERVICES, JPB BOARD OF DIRECTORS at 2 (Sept. 5, 2019) (available at https://www.caltrain.com/media/2443/download); MODERNIZATION PROGRAM PENINSULA CORRIDOR ELECTRIFICATION PROJECT (PCEP): JULY 2017 MONTHLY PROGRESS REPORT, CALTRAIN at 18-1 (July 31, 2017) (available at https://www.caltrain.com/media/616/download?inline); MODERNIZATION PROGRAM PENINSULA

ROBINS KAPLAN LLP
ATTORNEYS AT LAW
SILICON VALLEY

145. Caltrain implemented and used and continues to use the RailwayNet^{SM} system with EEPS and/or EEPS-like functionality and/or the AIM system with EEPS and/or EEPS-like functionality or any same or similar systems or methods as a SaaS and/or IaaS—a software/infrastructure as a service—product that provides "full-featured network management and infrastructure, hardware, network, operating systems, and applications for fault, performance, security and configuration management."[87]

146. The RailwayNet^{SM} system with EEPS and/or EEPS-like functionality and/or the AIM system with EEPS and/or EEPS-like functionality or any same or similar systems or methods is advertised to help facilitate the increases in safety and reliability in train control systems.[88]

147. The RailwayNet^{SM} system with EEPS and/or EEPS-like functionality and/or the AIM system with EEPS and/or EEPS-like functionality or any same or similar systems or methods, which Caltrain implemented and uses, improves rail safety. More particularly, "[t]his system refers to communication-based/processor-based train control technology designed to address a number of rail safety issues, including train-to-train collisions, over-speed derailments, incursions into

---

CORRIDOR ELECTRIFICATION PROJECT (PCEP): APRIL 2017 MONTHLY PROGRESS REPORT (April 30, 2017) at 17-1 (available at https://caltrain.com/media/613/download?inline); *Peninsula Corridor Electrification Project*, TYLIN, https://www.tylin.com/work/projects/peninsula-corridor-electrification-project (last visited July 7, 2025) ("We are also providing implementation management services to oversee the design, development, testing, and commissioning of the Office SCADA systems based on the Advanced Integration Management (AIM) system supplied by Wabtec (formerly ARINC), the system integrator."); *Caltrain Railroad Company Train Collision with On-Track Equipment and Derailment and Fire, National Transportation Safety Board Track and Engineering Group Chairman Factual Report*, RRD22MR007 at 58 (Sept. 9, 2022) ("Meetings with SEPTA and Wabtec (Who recently purchased the Rockwell Collins dispatch system known as ARINC used at Caltrain) were held recently. The use of a single code for an RWIC to provide to the dispatcher is essentially "'turnkey.'"); *Caltrain Passenger Train Collision with Hi-rail Construction Vehicles, National Transportation Safety Board,* RIR-24-01 at 11 (Feb. 27, 2024).

[87] White Paper at 6.

[88] *See, e.g., Amtrak signs nationwide contract for Rockwell Collins' ARINC RailwayNet^{SM} Positive Train Control service*, COLLINS AEROSPACE (Sep. 6, 2017), https://rockwellcollins.com/-/media/Files/Unsecure/Services-And-Support/Information-Management/ARINC-Rail/RC_Amtrak-Press-Release_09-06-17.ashx; *RailwayNet Positive Train Control Communication Solution*, WABTEC, https://www.wabteccorp.com/digital-intelligence/signaling-and-train-control/communications/railwaynet-positive-train-control-communication-solution (last visited July 7, 2025).

ROBINS KAPLAN LLP
ATTORNEYS AT LAW
SILICON VALLEY

established work-zone limits, and train movement through a main-line switch that is in an improper position."[89]

148. The RailwayNet℠ system with EEPS and/or EEPS-like functionality and/or the AIM system with EEPS and/or EEPS-like functionality or any same or similar systems or methods was implemented and used and continues to be used throughout Caltrain's routes.[90]

149. As explained below, the RailwayNet℠ system with EEPS and/or EEPS-like functionality and/or the AIM system with EEPS and/or EEPS-like functionality or any same or similar systems or methods is a hosted network, messaging and application platform, designed to assist operators in meeting the requirements mandated by the Rail Safety Improvement Act of 2008 (the "Act"). The Act directs the Federal Railroad Administration (FRA) to mandate new regulations focused on railroad safety. When used in conjunction with the operator's train control

[89] White Paper at 3.

[90] ARINC MAINTENANCE AND SUPPORT SERVICES, JPB BOARD OF DIRECTORS at 2 (Sept. 5, 2019) (available at https://www.caltrain.com/media/2443/download); MODERNIZATION PROGRAM PENINSULA CORRIDOR ELECTRIFICATION PROJECT (PCEP): JULY 2017 MONTHLY PROGRESS REPORT, CALTRAIN at 18-1 (July 31, 2017) (available at https://www.caltrain.com/media/616/download?inline); MODERNIZATION PROGRAM PENINSULA CORRIDOR ELECTRIFICATION PROJECT (PCEP): APRIL 2017 MONTHLY PROGRESS REPORT (April 30, 2017) at 17-1 (available at https://caltrain.com/media/613/download?inline); *Peninsula Corridor Electrification Project*, TYLIN, https://www.tylin.com/work/projects/peninsula-corridor-electrification-project (last visited July 7, 2025) ("We are also providing implementation management services to oversee the design, development, testing, and commissioning of the Office SCADA systems based on the Advanced Integration Management (AIM) system supplied by Wabtec (formerly ARINC), the system integrator.").

ROBINS KAPLAN LLP
ATTORNEYS AT LAW
SILICON VALLEY

infrastructure, the RailwayNet[SM] system with EEPS and/or EEPS-like functionality and/or the AIM system with EEPS and/or EEPS-like functionality or any same or similar systems or methods helps facilitate the increases in safety and reliability.[91]

150. The RailwayNet[SM] system with EEPS and/or EEPS-like functionality and/or the AIM system with EEPS and/or EEPS-like functionality or any same or similar systems or methods includes an "integration server and software" that "provides connectivity between the railroad IT systems and the hosted back-office components."[92] The integration server provides an interface with various system components.

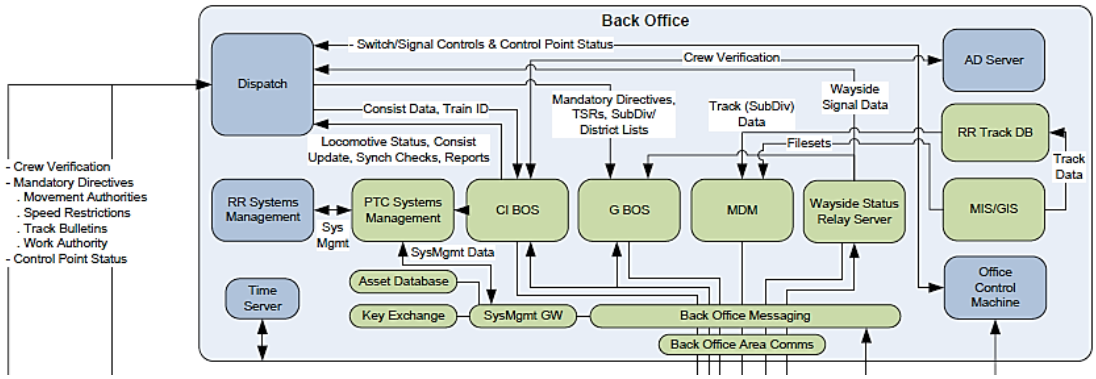

[91] *See, e.g., Amtrak signs nationwide contract for Rockwell Collins' ARINC RailwayNet[SM] Positive Train Control service*, COLLINS AEROSPACE (Sep. 6, 2017), https://rockwellcollins.com/-/media/Files/Unsecure/Services-And-Support/Information-Management/ARINC-Rail/RC_Amtrak-Press-Release_09-06-17.ashx.

[92] *See* White Paper at 8 (illustrating "AIM® integration server").

ROBINS KAPLAN LLP
ATTORNEYS AT LAW
SILICON VALLEY

AIM® integration server

The ARINC RailwayNet integrations server and software provides connectivity between the railroad IT systems and the hosted back-office components. The functions of this application include:

- Interface with customer's IT gateway
- Interface with back office
- Manage crew authentication through the customer's IT gateway
- Functions to assign train ID to trains based on the clearance number
- Functions to manage train consist through the customer's IT gateway
- Functions to track, display, and store events and alarms

Centralized Traffic Control and SCADA

Collins designs and integrates state-of-the-art rail control solutions using our ARINC Advanced Information Management (AIM®) platform. AIM serves as an end-to-end solution for all rail control requirements, including SCADA, Centralized Traffic Control, Positive Train Control (PTC) and control center integration. Highly flexible and feature-rich, AIM enables railroads to maximize operational efficiency, cost-effectiveness and safety, all while providing an environment protected by the latest tools and techniques in cybersecurity.

KEY AREAS OF EXPERTISE

- Train monitoring and control
- Automatic train tracking
- Automatic route setting/ automatic routing
- Automatic traffic regulation and schedule deviation
- Schedule management
- Integrated yard management
- Bulletins, authorities and restrictions management
- Employee in Charge (EIC) terminals
- Emergency Operating Procedures (EOP)
- Power planning
- Playback and simulation
- Data acquisition
- Interface integration

151. The RailwayNet[SM] system with EEPS and/or EEPS-like functionality and/or the AIM system with EEPS and/or EEPS-like functionality or any same or similar systems or methods, implemented and used and continues to be used by Caltrain, provides the network connections and office applications required to exchange critical information among railroads. It is available on a subscription basis as hosted SaaS (software as a service) and IaaS (infrastructure as a service) solutions, and messaging from the back office to the locomotive through VHF, cellular, and Wi-Fi is also available.[93]

152. The RailwayNet[SM] system with EEPS and/or EEPS-like functionality and/or the AIM system with EEPS and/or EEPS-like functionality or any same or similar systems or methods as implemented and used and continues to be used by Caltrain, further controls plural railways and a plurality of railway traffic interlocks. Specifically, Centralized Train Control systems, such as that employed by Caltrain and its implementation and use of the RailwayNet[SM] system with EEPS and/or EEPS-like functionality and/or the AIM system with EEPS and/or EEPS-like functionality

[93] *News from Rockwell Collins: Shared-network PTC platform*, RAILWAY AGE 14 (July 2016), https://issuu.com/railwayage/docs/july_2016_railway_age; *RailwayNet Positive Train Control Communication Solution*, WABTEC, https://www.wabteccorp.com/digital-intelligence/signaling-and-train-control/communications/railwaynet-positive-train-control-communication-solution (last visited July 7, 2025).

ROBINS KAPLAN LLP
ATTORNEYS AT LAW
SILICON VALLEY

ROBINS KAPLAN LLP
ATTORNEYS AT LAW
SILICON VALLEY

or any same or similar systems or methods "consists of a centralized train dispatcher's office that controls railroad interlocking and traffic flows in portions of the rail system designated as CTC territory."[94] Train dispatchers in the control center have control over all interlockings on Caltrain's railroads.[95]

153. Caltrain implemented and used and continues to use the RailwayNet^{SM} system with EEPS and/or EEPS-like functionality and/or the AIM system with EEPS and/or EEPS-like functionality or any same or similar systems or methods—a hosted network, messaging and application platform as amended—on Caltrain's railroads, including any commuter and freight routes that host Caltrain services.[96]

154. Accordingly, Caltrain's implementation and use of the RailwayNet^{SM} system with EEPS and/or EEPS-like functionality and/or the AIM system with EEPS and/or EEPS-like functionality or any same or similar systems or methods practices a "method for controlling railway access using a railway traffic control apparatus of a centralized railway control system configured for centralized control of traffic of a centrally controllable railway network including plural railways and a plurality of railway traffic interlocks dispersed in said plural railways constituting said railway network."

---

[94] *CTC*, WIKIPEDIA, https://en.wikipedia.org/wiki/Centralized_traffic_control.

[95] THE CALTRAIN CORRIDOR VISION PLAN: APPENDIX A, SAN FRANCISCO BAY AREA PLANNING AND URBAN RESEARCH ASSOCIATION (2016) at 5, n. 5 ("On the Caltrain corridor, "interlocking" is generally synonymous with "control point," i.e., a location in a Centralized Traffic Control (CTC) railroad network with signals and turnouts directly controlled by dispatchers.") (available at https://www.spur.org/sites/default/files/2017-02/Appendix_A_Existing_Conditions_and_Methodology.pdf).

[96] ARINC MAINTENANCE AND SUPPORT SERVICES, JPB BOARD OF DIRECTORS at 2 (Sept. 5, 2019) (available at https://www.caltrain.com/media/2443/download); MODERNIZATION PROGRAM PENINSULA CORRIDOR ELECTRIFICATION PROJECT (PCEP): JULY 2017 MONTHLY PROGRESS REPORT, CALTRAIN at 18-1 (July 31, 2017) (available at https://www.caltrain.com/media/616/download?inline); MODERNIZATION PROGRAM PENINSULA CORRIDOR ELECTRIFICATION PROJECT (PCEP): APRIL 2017 MONTHLY PROGRESS REPORT (April 30, 2017) at 17-1 (available at https://caltrain.com/media/613/download?inline); *Peninsula Corridor Electrification Project*, TYLIN, https://www.tylin.com/work/projects/peninsula-corridor-electrification-project (last visited July 7, 2025) ("We are also providing implementation management services to oversee the design, development, testing, and commissioning of the Office SCADA systems based on the Advanced Integration Management (AIM) system supplied by Wabtec (formerly ARINC), the system integrator."); *Caltrain Railroad Company Train Collision with On-Track Equipment and Derailment and Fire, National Transportation Safety Board Track and Engineering Group Chairman Factual Report*, RRD22MR007 at 58 (Sept. 9, 2022) ("Meetings with SEPTA and Wabtec (Who recently purchased the Rockwell Collins dispatch system known as ARINC used at Caltrain) were held recently. The use of a single code for an RWIC to provide to the dispatcher is essentially "'turnkey.'"); *Caltrain Passenger Train Collision with Hi-rail Construction Vehicles, National Transportation Safety Board,* RIR-24-01 at 11 (Feb. 27, 2024).

155. Caltrain's implementation and use of the RailwayNet[SM] system with EEPS and/or EEPS-like functionality and/or the AIM system with EEPS and/or EEPS-like functionality or any same or similar systems or methods provides "a user interface of the railway traffic control apparatus, including a block placing part to place a block on one or more specified track sections in any of said plural railways constituting said railway network that is managed by centralized control operation from the railway traffic control apparatus, the railway traffic control apparatus controlling, by said centralized control operation, one or more interlocks amongst the plurality of railway traffic interlocks dispersed in said plural railways constituting said railway network, to block railway traffic to the specified track sections and thereby to permit a railway field worker to enter the track sections."

156. Caltrain's implementation and use of the RailwayNet[SM] system with EEPS and/or EEPS-like functionality and/or the AIM system with EEPS and/or EEPS-like functionality or any same or similar systems or methods includes an enhanced employee protection functionality.[97]

[97] CALTRAIN SAFETY BRIEFING (April 19, 2023) at 18 (available at https://www.caltrain.com/media/30177/download); PENINSULA CORRIDOR JOINT POWERS BOARD, ANNUAL COMPREHENSIVE FINANCIAL REPORT (FISCAL YEARS ENDED JUNE 30, 2023 AND 2022) at ix (available at https://www.caltrain.com/media/32501); PENINSULA CORRIDOR JOINT POWERS BOARD, ANNUAL COMPREHENSIVE FINANCIAL REPORT (FISCAL YEARS ENDED JUNE 30, 2024 AND 2023) at xiii (available at https://www.caltrain.com/media/34732); Project Monitoring Report (PMR) November 2024: Peninsula Corridor Electrification Project (PCEP) San Francisco to San Jose, CA at A-1 (2024) (available at https://www.caltrain.com/media/35145.).

ROBINS KAPLAN LLP
ATTORNEYS AT LAW
SILICON VALLEY

ROBINS KAPLAN LLP
ATTORNEYS AT LAW
SILICON VALLEY

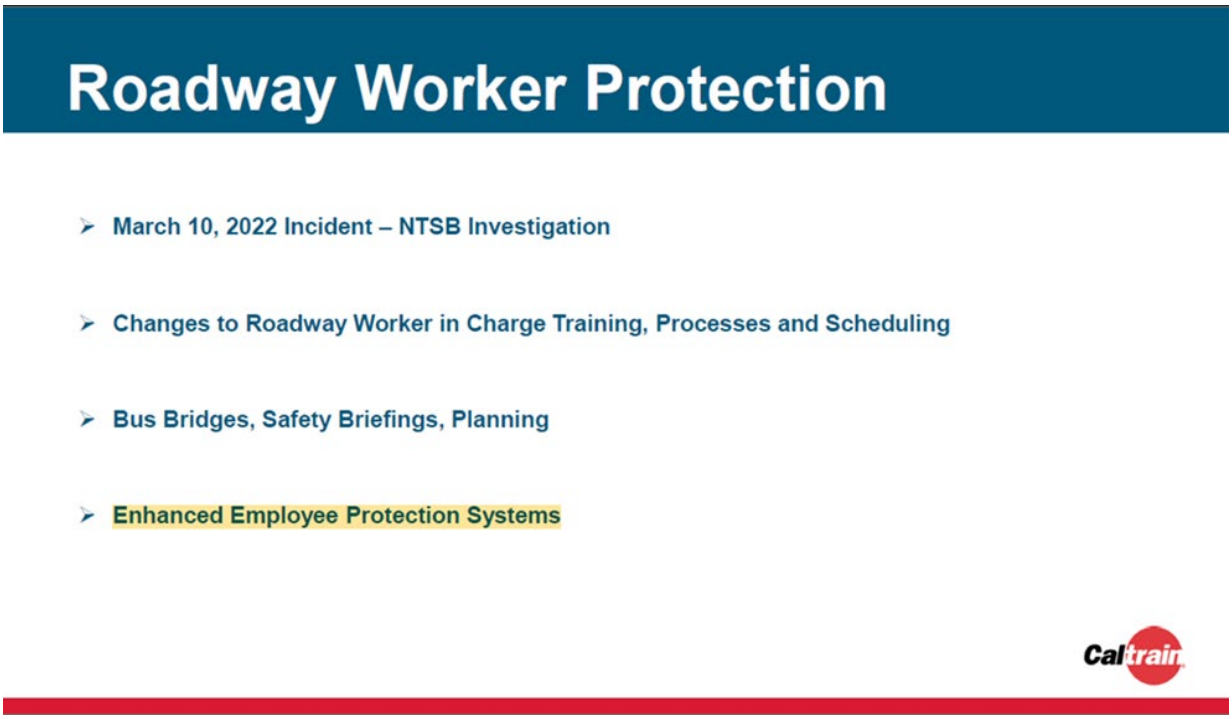

157. The RailwayNet[SM] system with EEPS and/or EEPS-like functionality and/or the AIM system with EEPS and/or EEPS-like functionality or any same or similar systems or methods, as implemented and used and continues to be used by Caltrain, uses "track and time" in which "[b]efore granting track and time authority, the dispatcher must apply a 'block' through the dispatching system to prevent train movement into the limits."[98]

158. Additionally, the RailwayNet[SM] system with EEPS and/or EEPS-like functionality and/or the AIM system with EEPS and/or EEPS-like functionality or any same or similar systems or methods, implemented and used and continues to be used by Caltrain, that places track sections in "foul time" is a "block placing part" as recited in this claim element.

159. Specifically, FRA regulations 49 C.F.R. § 214.323 defines "foul time" as "a method of establishing working limits on controlled track in which a . . . [railway field worker] is notified by the train dispatcher or control operator that ***no trains will operate within a specific segment of controlled track until the . . . [railway field worker] reports clear of the track***." (emphasis added).

160. Caltrain's implementation and use of the RailwayNet[SM] system with EEPS and/or

[98] Caltrain Passenger Train Collision with Hi-rail Construction Vehicles, National Transportation Safety Board, RIR-24-01 at 11 (Feb. 27, 2024).

EEPS-like functionality and/or the AIM system with EEPS and/or EEPS-like functionality or any same or similar systems or methods has the ability to place tracks in foul time.[99]

161. Because Caltrain, through its implementation and use of the RailwayNet^{SM} system with EEPS and/or EEPS-like functionality and/or the AIM system with EEPS and/or EEPS-like functionality or any same or similar systems or methods, has the ability to place tracks in foul time, it includes "a block placing part to place a block on one or more specified track sections in any of said plural railways constituting said railway network that is managed by centralized control operation from the railway traffic control apparatus, the railway traffic control apparatus controlling, by said centralized control operation, one or more interlocks amongst the plurality of railway traffic interlocks dispersed in said plural railways constituting said railway network, to block railway traffic to the specified track sections and thereby to permit a railway field worker to enter the track sections."

162. Moreover, in order to place a track segment in "foul time," the system must provide a "user interface of the railway traffic control apparatus" to permit the dispatcher to establish the blocking protection. As illustrated in the below images, such interfaces exist in Caltrain's control centers.

[99] *See, e.g., Caltrain Railroad Company Train Collision with On-Track Equipment and Derailment and Fire, National Transportation Safety Board Track and Engineering Group Chairman Factual Report*, RRD22MR007 at 15 (Sept. 9, 2022) ("The RWIC was asked if he were aware about whether the men or equipment fouled main track one. . . ."); Roadway Worker Protection (RWP) Caltrain Training - Study Guide, Caltrain at 10 ("Form C -Track Out Of Service . . . The track is taken out of service and not available for trains to use unless the RWIC provides permission. . . .) (available at https://www.caltrain.com/media/2098#:~:text=Fouling%20a%20track%2D%20is%20the%20placement%20of,field%20side%20of%20the%20nearest%20running%20rail.&text=safety%20at%20least%2015%20seconds%20prior%20to%20the%20train%20passing%20by%20the%20work%20zone.).

ROBINS KAPLAN LLP
ATTORNEYS AT LAW
SILICON VALLEY

ROBINS KAPLAN LLP
ATTORNEYS AT LAW
SILICON VALLEY

CEMOF[100]

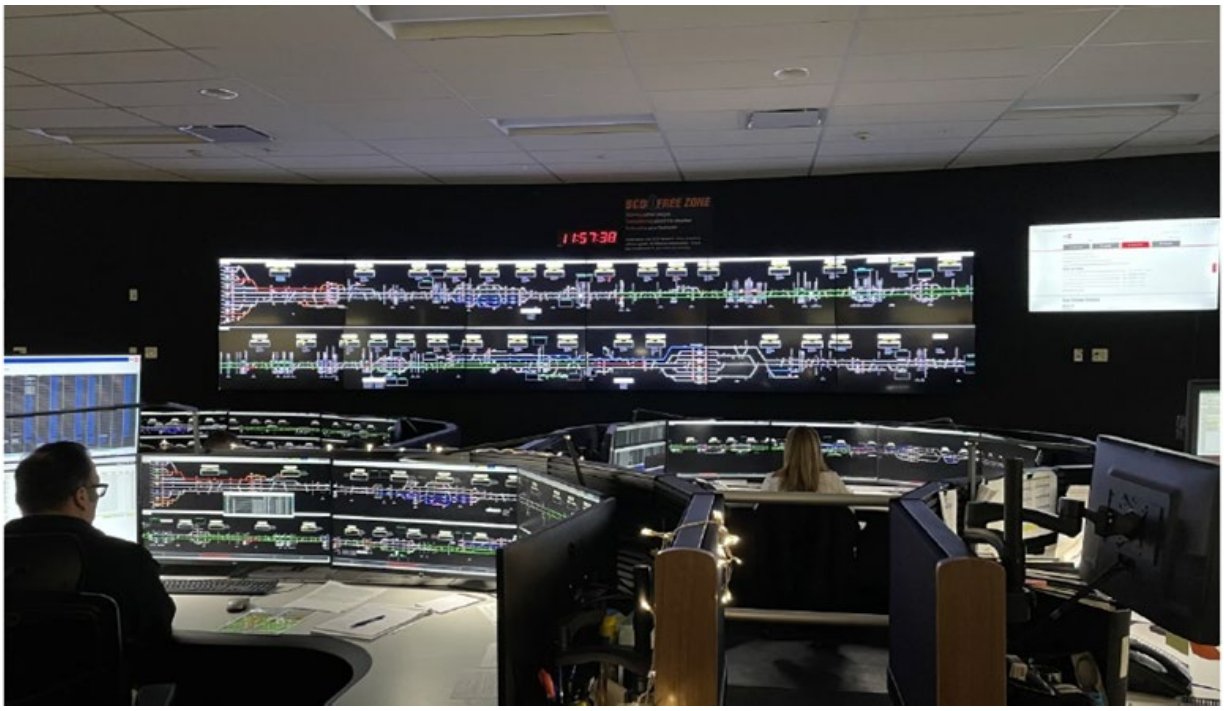

163. The blocking protection is applied by controlling one or more interlocks.[101]

164. The RailwayNet[SM] system with EEPS and/or EEPS-like functionality and/or the AIM system with EEPS and/or EEPS-like functionality or any same or similar systems or methods provides "train monitoring and control," automatic route setting/automatic routing," "automatic traffic regulation," and "bulletins, authorities, and restrictions management," as shown in the image below.[102] One or more of these functionalities encompasses the claimed block placing part.

---

[100] *Peninsula Corridor Electrification Project*, TYLIN, https://www.tylin.com/work/projects/peninsula-corridor-electrification-project (last visited July 7, 2025).

[101] *See* THE CALTRAIN CORRIDOR VISION PLAN: APPENDIX A, SAN FRANCISCO BAY AREA PLANNING AND URBAN RESEARCH ASSOCIATION (2016) at 1 (available at https://www.spur.org/sites/default/files/2017-02/Appendix_A_Existing_Conditions_and_Methodology.pdf); Roadway Worker Protection (RWP) Caltrain Training - Study Guide, Caltrain at 11 (available at https://www.caltrain.com/media/2098#:~:text=Fouling%20a%20track%2D%20is%20the%20placement%20of,field%20side%20of%20the%20nearest%20running%20rail.&text=safety%20at%20least%2015%20seconds%20prior%20to%20the%20train%20passing%20by%20the%20work%20zone.)

[102] *Intelligence-Based Rail Solutions*, COLLINS AEROSPACE, [https://web.archive.org/web/20211122013021/https://www.collinsaerospace.com/-/media/project/collinsaerospace/collinsaerospace-website/product-assets/marketing/r/rail/arinc-rail-solutions-for-passengers.pdf?rev=e7e5ddbff2de4154ba265f03e27f14d3] (last visited July 7, 2025); *see Advanced Information Management (AIM) Rail Dispatch*, WABTEC, https://www.wabteccorp.com/digital-intelligence/signaling-and-train-control/dispatch/advanced-information-management-aim-rail-dispatch (last visited July 7, 2025).

ROBINS KAPLAN LLP
ATTORNEYS AT LAW
SILICON VALLEY

Centralized Traffic Control and SCADA

Collins designs and integrates state-of-the-art rail control solutions using our ARINC Advanced Information Management (AIM®) platform. AIM serves as an end-to-end solution for all rail control requirements, including SCADA, Centralized Traffic Control, Positive Train Control (PTC) and control center integration. Highly flexible and feature-rich, AIM enables railroads to maximize operational efficiency, cost-effectiveness and safety, all while providing an environment protected by the latest tools and techniques in cybersecurity.

KEY AREAS OF EXPERTISE

- Train monitoring and control
- Automatic train tracking
- Automatic route setting/ automatic routing
- Automatic traffic regulation and schedule deviation
- Schedule management
- Integrated yard management
- Bulletins, authorities and restrictions management
- Employee in Charge (EIC) terminals
- Emergency Operating Procedures (EOP)
- Power planning
- Playback and simulation
- Data acquisition
- Interface integration

165. The RailwayNet[SM] system with EEPS and/or EEPS-like functionality and/or the AIM system with EEPS and/or EEPS-like functionality or any same or similar systems or methods, implemented and used and continues to be used by Caltrain, is a SaaS and IaaS product that provides "full-featured network management and infrastructure, hardware, network, operating systems, and applications for fault, performance, security and configuration management."[103] Additionally, the RailwayNet[SM] system with EEPS and/or EEPS-like functionality and/or the AIM system with EEPS and/or EEPS-like functionality or any same or similar systems or methods is "designed to help meet the availability standards required for PTC operations."[104] Because the system is designed to support railroads to meet the PTC requirements, it must be configured to manage train movements, including placing blocks on one or more sections of railway track to prevent trains from traversing the one or more sections of railway track.

166. In order to comply with and implement FRA's regulations (communication-based/processor-based train control technology designed to address a number of railway safety

[103] White Paper at 6.
[104] *Id.*

ROBINS KAPLAN LLP
ATTORNEYS AT LAW
SILICON VALLEY

issues including train-to-train collisions, over-speed derailments, incursions into established work-zone limits, and train movement through a main-line switch that is in an improper position), the RailwayNet^{SM} system with EEPS and/or EEPS-like functionality and/or the AIM system with EEPS and/or EEPS-like functionality or any same or similar systems or methods is configured and used to place a block on one or more sections of railway track to prevent trains from traversing the one or more sections of railway track.[105]

167. Accordingly, Caltrain's implementation and use of the RailwayNet^{SM} system with EEPS and/or EEPS-like functionality and/or the AIM system with EEPS and/or EEPS-like functionality or any same or similar systems or methods provides "a user interface of the railway traffic control apparatus, including a block placing part to place a block on one or more specified track sections in any of said plural railways constituting said railway network that is managed by centralized control operation from the railway traffic control apparatus, the railway traffic control apparatus controlling, by said centralized control operation, one or more interlocks amongst the plurality of railway traffic interlocks dispersed in said plural railways constituting said railway network, to block railway traffic to the specified track sections and thereby to permit a railway field worker to enter the track sections."

168. Caltrain's implementation and use of the system with EEPS and/or EEPS-like functionality and/or the AIM system with EEPS and/or EEPS-like functionality or any same or similar systems or methods further "generat[es] a removal code, determin[es] an electronic contact address of the railway field worker by accessing a rail personnel contact database registering, for each railway personnel, electronic contact information of the railway personnel, and transmit[s] the removal code to the electronic contact address of the railway field worker."

169. In a report submitted to the U.S. Department of Transportation regarding the RailwayNet^{SM} system with EEPS and/or EEPS-like functionality and/or the AIM system with EEPS and/or EEPS-like functionality or any same or similar systems or methods, communications to the railway field worker are generated in the "back office."[106] The below figure illustrates.

[105] Final Report at 14.
[106] Final Report at 11.

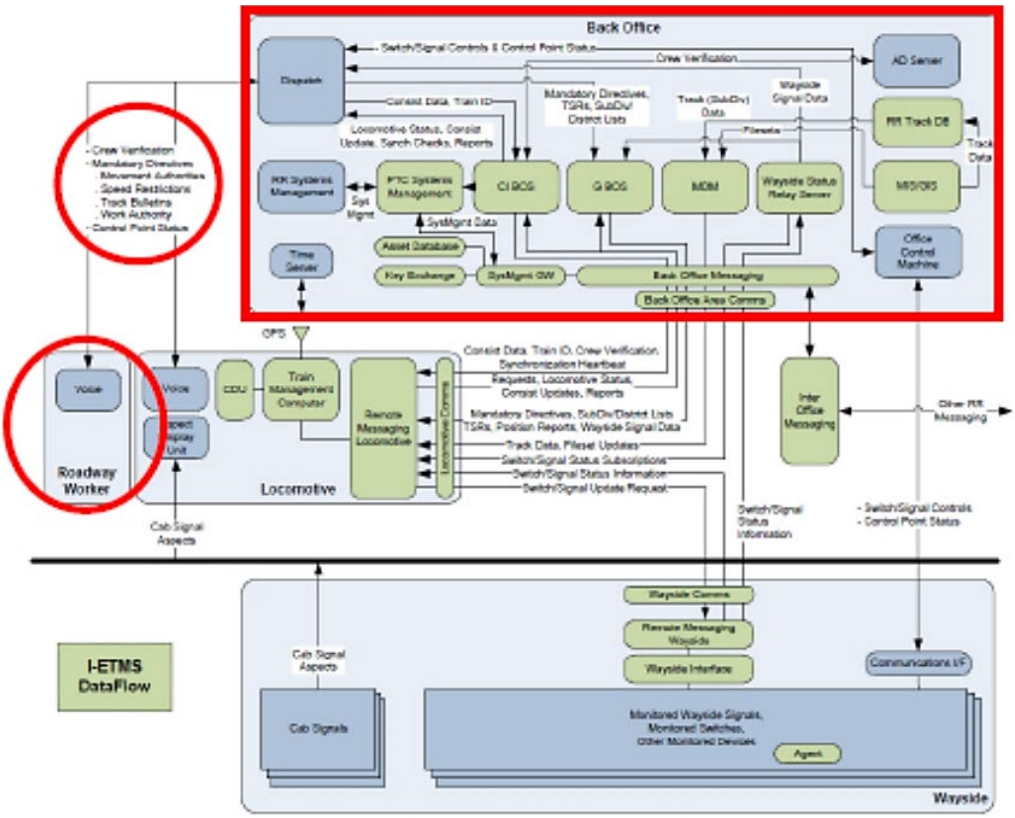

Figure 2 I-ETMS PTC Message Flows

170. The "back office" of Caltrain's implementation and use of the RailwayNet[SM] system with EEPS and/or EEPS-like functionality and/or the AIM system with EEPS and/or EEPS-like functionality or any same or similar systems or methods generates a release code which is transmitted to the railway field worker.[107]

> c. Release "Codes"
>
> i. Meetings with SEPTA and Wabtec (Who recently purchased the Rockwell Collins dispatch system known as ARINC used at Caltrain) were held recently. The use of a single code for an RWIC to provide to the dispatcher is essentially "turnkey."

[107] *See, e.g., Caltrain Railroad Company Train Collision with On-Track Equipment and Derailment and Fire*, National Transportation Safety Board Track and Engineering Group Chairman Factual Report, RRD22MR007 at 58 (Sept. 9, 2022); *Caltrain Passenger Train Collision with Hi-rail Construction Vehicles, National Transportation Safety Board,* RIR-24-01 at 11 (Feb. 27, 2024); QUARTERLY PROGRESS REVIEW MEETING NO. 22: DECEMBER 5, 2022, PENINSULA CORRIDOR JOINT POWERS BOARD (JPB)/CALTRAIN at 4 (Dec. 19, 2022).

ROBINS KAPLAN LLP
ATTORNEYS AT LAW
SILICON VALLEY

1.7.3 Redundant Safety Protections

Caltrain instituted a redundant safety process for dispatchers requiring them to click a checkbox verifying the release of track and time authority before its release. They also acquired software that will only allow the dispatcher to release track and time authority after both the RWIC and one other authorized person in the work group has entered a special pin code into the system.

Caltrain now requires that a RWIC be physically within the limits of track and time authority when requesting and releasing authority. They also modified On Track Safety Rule 6.3.1 to require the track and time authority form to be initialed by at least one other roadway worker/contractor in the work group confirming that they are clear of the track.

- The safety task force formed after the March 10, 2022 incident continues to meet.
  - A new protocol has been developed that requires both the Roadway Worker in Charge (RWIC) and the contractor's foreman to sign off before track and time protection can be released.
  - A new electronic process has just been implemented that requires a specific electronic code to be transmitted to the dispatcher. Before protection can be released.

171. In order for the code to be transmitted to the railway field worker, the "back office" of Caltrain's implementation and use of the RailwayNet[SM] system with EEPS and/or EEPS-like functionality and/or the AIM system with EEPS and/or EEPS-like functionality or any same or similar systems or methods must retrieve the phone number of the railway field worker (i.e., an "electronic contact address") and then transmit the release code to an electronic contact address accessible by the railway field worker.

172. The RailwayNet[SM] system with EEPS and/or EEPS-like functionality and/or the AIM system with EEPS and/or EEPS-like functionality or any same or similar systems or methods, as implemented and used and continues to be used by Caltrain, specifies providing back-office infrastructure and messaging, including "[s]torage and delivery of crew and consist information, train IDs and clearances."[108] It further specified enabling ITC PTC interoperability and compliance with I-ETMS systems.[109] Because I-ETMS systems require communication of crew verification

[108] White Paper at 7.
[109] *See* Final Report at 43.

ROBINS KAPLAN LLP
ATTORNEYS AT LAW
SILICON VALLEY

and employee authentication, Caltrain maintains electronic contact addresses of the railway field workers from a rail personnel contact database. RailwayNet[SM] messaging functions also include: "[k]ey exchange server," described as "[s]ecurity keys with data store."[110]

A summary of the ARINC RailwayNet PTC hosting service functionality is shown below.

Messaging functions	Description	Included
Back-office messaging	Message transmission for the railroad back office	•*
Inter-office messaging	Message transmission between assets and railroad back offices in support of train initialization	•*
Systems management gateway	Messaging systems management	•
Systems management	Remote asset monitoring and control	Optional
Back-office area communications	Communications infrastructure at the Annapolis facility in support of railroad remote asset connectivity via cellular and internet connections	•
Key exchange server	Security keys with data store	•

173. In order to know which mobile device to send the release code to, the RailwayNet[SM] system with EEPS and/or EEPS-like functionality and/or the AIM system with EEPS and/or EEPS-like functionality or any same or similar systems or methods, as implemented and used and continues to be used by Caltrain, must have a database storing the electronic contact address for the railway workers.

174. The RailwayNet[SM] system with EEPS and/or EEPS-like functionality and/or the AIM system with EEPS and/or EEPS-like functionality or any same or similar systems or methods, implemented and used and continues to be used by Caltrain, is a SaaS and IaaS product that provides "full-featured network management and infrastructure, hardware, network, operating systems, and applications for fault, performance, security and configuration management."[111] It additionally specifies enabling ITC PTC interoperability and compliance with I-ETMS systems.[112]

175. The RailwayNet[SM] system with EEPS and/or EEPS-like functionality and/or the AIM system with EEPS and/or EEPS-like functionality or any same or similar systems or methods

[110] White Paper at 7.
[111] White Paper at 6.
[112] Final Report at 43.

ROBINS KAPLAN LLP
ATTORNEYS AT LAW
SILICON VALLEY

supports I-ETMS message flows, including communications with railway workers to communicate crew verification and mandatory directives.[113] The below image illustrates.

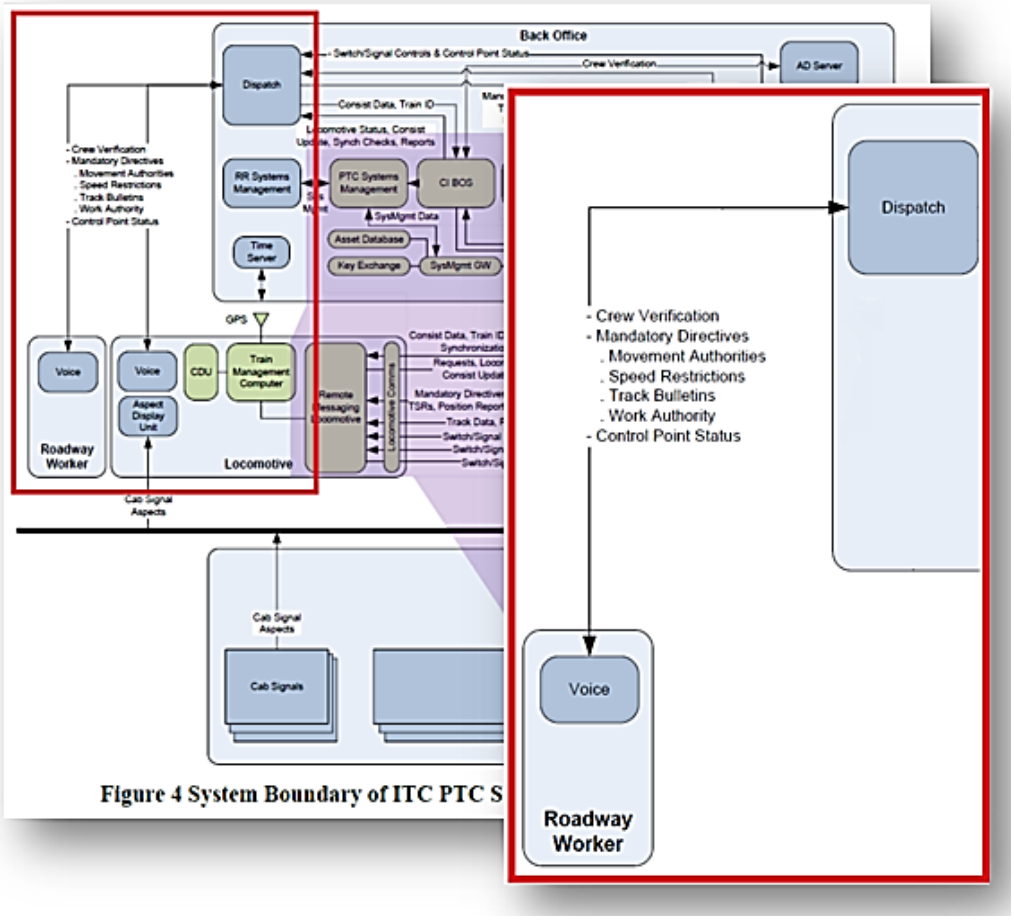

Figure 4 System Boundary of ITC PTC S

176. Likewise, Wabtec acknowledges that it offers I-ETMS supported packages.[114] Wabtec also advertise that RailwayNet^{SM} "offers reliable, tailored, and scalable PTC messaging. Utilizing VHF, cellular, Wi-Fi and MPLS, RailwayNet^{SM} PTC delivers initialization messages . . . ."[115]

177. Accordingly, Caltrain's implementation and use of the RailwayNet^{SM} system with EEPS and/or EEPS-like functionality and/or the AIM system with EEPS and/or EEPS-like

[113] *Id.* at 14.
[114] *I-ETMS Positive Train Control (PTC) Communications Package*, WABTEC, https://www.wabteccorp.com/digital-intelligence/signaling-and-train-control/communications/i-etms-positive-train-control-ptc-communications-package (last visited July 7, 2025).
[115] *RailwayNet Positive Train Control Communication Solution*, WABTEC, https://www.wabteccorp.com/digital-intelligence/signaling-and-train-control/communications/railwaynet-positive-train-control-communication-solution (last visited July 7, 2025).

ROBINS KAPLAN LLP
ATTORNEYS AT LAW
SILICON VALLEY

functionality or any same or similar systems or methods generates "a removal code, determin[es] an electronic contact address of the railway field worker by accessing a rail personnel contact database registering, for each railway personnel, electronic contact information of the railway personnel, and transmitting the removal code to the electronic contact address of the railway field worker."

178. Caltrain's implementation and use of the RailwayNet[SM] system with EEPS and/or EEPS-like functionality and/or the AIM system with EEPS and/or EEPS-like functionality or any same or similar systems or methods permits "the block to said one or more track sections to be removed only upon entry of the removal code by said centralized control operation from the railway traffic control apparatus."

179. Caltrain's implementation and use of the RailwayNet[SM] system with EEPS and/or EEPS-like functionality and/or the AIM system with EEPS and/or EEPS-like functionality or any same or similar systems or methods requires the entry of a release code in order to remove the protection from the track.[116]

c. Release "Codes"

i. Meetings with SEPTA and Wabtec (Who recently purchased the Rockwell Collins dispatch system known as ARINC used at Caltrain) were held recently. The use of a single code for an RWIC to provide to the dispatcher is essentially "turnkey."

[116] *See, e.g., Caltrain Railroad Company Train Collision with On-Track Equipment and Derailment and Fire*, National Transportation Safety Board Track and Engineering Group Chairman Factual Report, RRD22MR007 at 58 (Sept. 9, 2022); *Caltrain Passenger Train Collision with Hi-rail Construction Vehicles, National Transportation Safety Board,* RIR-24-01 at 11 (Feb. 27, 2024); QUARTERLY PROGRESS REVIEW MEETING NO. 22: DECEMBER 5, 2022, PENINSULA CORRIDOR JOINT POWERS BOARD (JPB)/CALTRAIN at 4 (Dec. 19, 2022).

ROBINS KAPLAN LLP
ATTORNEYS AT LAW
SILICON VALLEY

1.7.3 Redundant Safety Protections

Caltrain instituted a redundant safety process for dispatchers requiring them to click a checkbox verifying the release of track and time authority before its release. They also acquired software that will only allow the dispatcher to release track and time authority after both the RWIC and one other authorized person in the work group has entered a special pin code into the system.

Caltrain now requires that a RWIC be physically within the limits of track and time authority when requesting and releasing authority. They also modified On Track Safety Rule 6.3.1 to require the track and time authority form to be initialed by at least one other roadway worker/contractor in the work group confirming that they are clear of the track.

- The safety task force formed after the March 10, 2022 incident continues to meet.
  - A new protocol has been developed that requires both the Roadway Worker in Charge (RWIC) and the contractor's foreman to sign off before track and time protection can be released.
  - A new electronic process has just been implemented that requires a specific electronic code to be transmitted to the dispatcher. Before protection can be released.

180. Moreover, the FRA has recognized that the RailwayNet^{SM} system with EEPS and/or EEPS-like functionality and/or the AIM system with EEPS and/or EEPS-like functionality or any same or similar systems or methods implemented and used and continues to be used by Caltrain complies with applicable recommended regulations (communication-based/processor-based train control technology designed to address a number of rail safety issues including train-to-train collisions, over-speed derailments, incursions into established work-zone limits, and train movement through a main-line switch that is in an improper position) in that the "dispatching system will not allow a dispatcher to release controlled track working limits until the RWIC affirmatively indicates via an electronic prompt that he or she is releasing working limits authority."[117]

181. Accordingly, Caltrain's implementation and use of the RailwayNet^{SM} system with EEPS and/or EEPS-like functionality and/or the AIM system with EEPS and/or EEPS-like functionality or any same or similar systems or methods permits "the block to said one or more

[117] *RRR,* 81 Fed. Reg. at 37860.

ROBINS KAPLAN LLP
ATTORNEYS AT LAW
SILICON VALLEY

track sections to be removed only upon entry of the removal code by said centralized control operation from the railway traffic control apparatus."

182. Therefore, Caltrain, through its implementation and use of the RailwayNet^{SM} system with EEPS and/or EEPS-like functionality and/or the AIM system with EEPS and/or EEPS-like functionality or any same or similar systems or methods has infringed and continues to infringe at least claim 19 of the '835 patent.

183. As direct and proximate result of Caltrain's infringement of the '835 patent, Railware has been irreparably injured and has been caused significant harm and financial damages.

184. Caltrain has also induced and continues to induce infringement of at least claim 19 of the '835 patent in violation of 35 U.S.C. § 271(b).

185. Caltrain induces its users, and/or developers of its systems or methods to infringe at least claim 19 of the '835 patent, and does so with the specific intent, by providing instructions, directions, information, and/or knowledge on how to use its systems or methods and/or incorporate its systems or methods into other products (including the RailwayNet^{SM} system with EEPS and/or EEPS-like functionality and/or the AIM system with EEPS and/or EEPS-like functionality or any same or similar systems or methods).

186. Caltrain had notice of and was aware or should have been aware of its infringement of the '835 patent by at least February 4, 2020, or at the latest May 15, 2025.

187. Caltrain knew or should have known and received notice of the '835 patent at least on its issue date: February 4, 2020.

188. To the extent the marking requirements of 35 U.S.C. § 287 apply, Caltrain had constructive knowledge of the '835 patent at least since October 21, 2020.

189. Further, Caltrain knew or should have known and received notice of the '835 patent on at least June 15, 2022, which is the date Railware filed suit against Amtrak for infringement of the '835 patent, or earlier considering the business relationship between Caltrain and Amtrak, and again on at least July 8, 2024, which is the date Railware filed suit against SEPTA for infringement of the '835 patent, and again on the dates of any subsequent litigations filed by Railware regarding the Asserted Patents.

ROBINS KAPLAN LLP
ATTORNEYS AT LAW
SILICON VALLEY

ROBINS KAPLAN LLP
ATTORNEYS AT LAW
SILICON VALLEY

190. Further, Caltrain knew or should have known and received notice of the '835 patent on at least September 8, 2022, which is the date Caltrain issued a report indicating that it had met with SEPTA regarding its CTC system, and discussed the "use of a single code for an RWIC to provide to the dispatcher."

191. Further, Caltrain knew or should have known and received notice of the '835 patent as of May 15, 2025, when Caltrain was sent a letter informing it of its infringement of the '835 patent.

192. Caltrain's continued infringement on or after any of these dates is in spite of the objectively high likelihood that its activities constitute infringement of a valid patent, and this risk was either known or so obvious that it should have been known to Caltrain. Thus, Caltrain's continued infringement at least as of February 4, 2020, or at the latest May 15, 2025, is willful and deliberate.

193. Railware has suffered and continues to suffer damages and irreparable harm as a result of Caltrain's past and ongoing infringement. Unless and until Caltrain's infringement is enjoined, Railware will continue to be damaged and irreparably harmed.

194. Railware is entitled to all remedies at law and equity including, but not limited to, an injunction against Caltrain's infringement of the '835 patent pursuant to 35 U.S.C. § 283.

195. Railware is entitled to damages for Caltrain's infringement of the '835 patent including, but not limited to, damages pursuant to 35 U.S.C. §§ 284 and 285.

THIRD CLAIM FOR RELIEF
(Infringement of the '115 patent)

196. Railware repeats and incorporates by reference all prior allegations of this Complaint as if fully set forth herein.

197. Railware is the owner by assignment of all right, title, and interest in and to the '115 patent.

198. The '115 patent is valid and enforceable.

199. Claim 20 of the '115 patent recites:

A railway control apparatus for centralized control of a centrally controllable

ROBINS KAPLAN LLP
ATTORNEYS AT LAW
SILICON VALLEY

railway network including plural railways and a plurality of railway interlocks dispersed in said plural railways, comprising:

> a processor for controlling a plurality of track sections in the railway network, wherein each track section is associated with a corresponding interlock and is disposed in any of said plural railways of said railway network that is managed by centralized control operation from the railway control apparatus, the processor controlling, by said centralized control operation, one or more interlocks amongst the plurality of railway interlocks dispersed in said plural railways of said railway network, to block railway traffic to one or more specified track sections; and
>
> a memory device storing computer-executable instructions, wherein execution of the computer-executable instructions by the processor causes the railway control apparatus to:
>
> > receive a selection of at least one track section amongst the plurality of track sections;
> >
> > transmit a block signal to the corresponding interlock associated with the at least one selected track section, to place a block on the selected track section by said centralized control operation from the railway control apparatus;
> >
> > generate a secret code associated with the at least one selected track section; and
> >
> > transmit the secret code to a remote user terminal.

200. In violation of 35 U.S.C. § 271(a), Caltrain has infringed and continues to infringe one or more claims of the ’115 patent by making, using, offering for sale, selling, and/or importing in or into the United States a system or method covered by the ’115 patent, including, but not limited to, at least Caltrain’s implementation and/or use of the RailwayNet^{SM} system with EEPS and/or EEPS-like functionality and/or the AIM system with EEPS and/or EEPS-like functionality or any same or similar systems or methods.[118]

201. Caltrain, through its implementation and/or use of the RailwayNet^{SM} system with EEPS and/or EEPS-like functionality and/or the AIM system with EEPS and/or EEPS-like functionality or any same or similar systems or methods, infringes at least claim 20 of the ’115 patent.

202. Caltrain’s implementation and use of the RailwayNet^{SM} system with EEPS and/or

[118] Further investigation may reveal that others of Caltrain’s products and systems also directly or indirectly infringe at least claim 20 or other claims of the ’115 patent.

ROBINS KAPLAN LLP
ATTORNEYS AT LAW
SILICON VALLEY

EEPS-like functionality and/or the AIM system with EEPS and/or EEPS-like functionality or any same or similar systems or methods is a "railway control apparatus for centralized control of a centrally controllable railway network including plural railways and a plurality of railway interlocks dispersed in said plural railways."

203. Caltrain owns and/or operates one or more control centers, including the CEMOF located at 585 Lenzen Avenue, San Jose, California 95126.[119] Control centers are centralized railway control systems using methods to control access to railway tracks configured for centralized control of traffic of a centrally controllable railway network including plural railways and a plurality of railway traffic interlocks dispersed in said plural railways constituting said railway network.

204. Caltrain's control centers, examples of which are shown below, include a number of terminals through which train dispatchers control the movement of trains, including by placing blocks on specified track sections. The below image illustrates.

CEMOF[120]

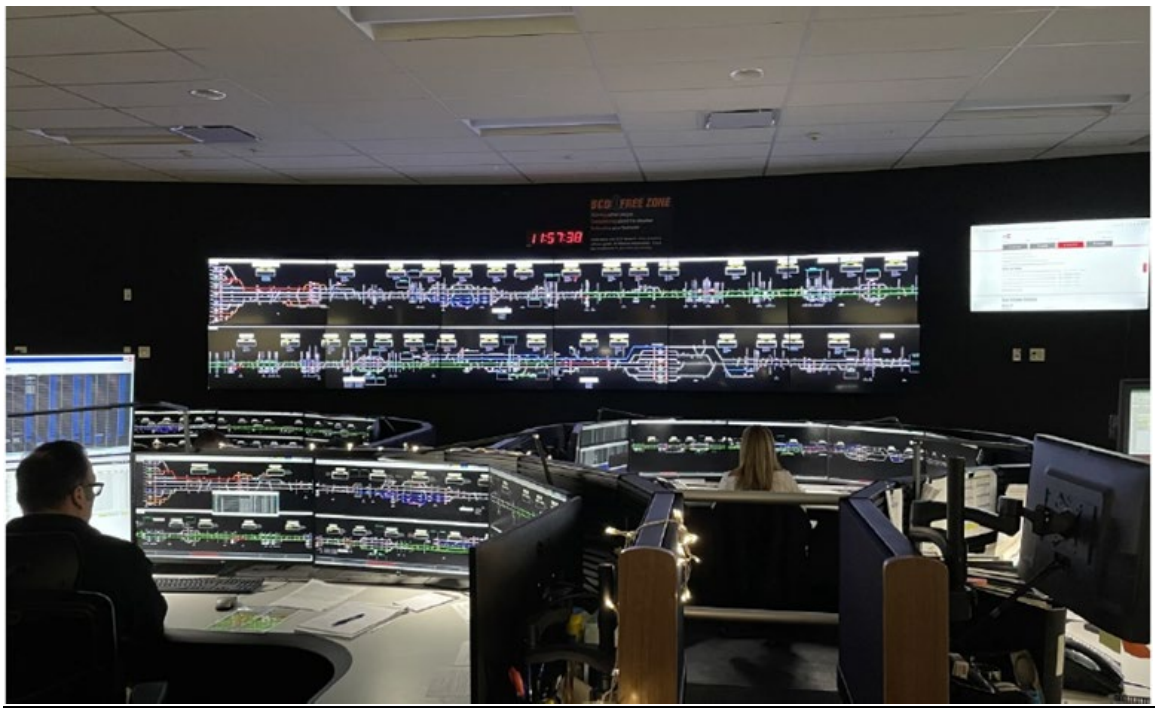

[119] *See Central Equipment & Maintenance Facility (CEMOF)*, CALTRAIN, https://www.caltrain.com/projects/central-equipment-maintenance-facility-cemof (last visited July 7, 2025).
[120] *Peninsula Corridor Electrification Project*, TYLIN, https://www.tylin.com/work/projects/peninsula-corridor-electrification-project (last visited July 7, 2025).

ROBINS KAPLAN LLP
ATTORNEYS AT LAW
SILICON VALLEY

205. Caltrain's control centers are "the 'nerve center,' of the commuter railroad, where dispatchers direct and monitor train traffic between San Francisco and Gilroy"[121] and "control[] all train movement on the corridor."[122]

206. The RailwayNet[SM] system with EEPS and/or EEPS-like functionality and/or the AIM system with EEPS and/or EEPS-like functionality or any same or similar systems or methods provides "centralized traffic control," "train monitoring and control," "automatic route setting/automatic routing," "automatic traffic regulation," and "bulletins, authorities," and "restrictions management."[123]

Centralized Traffic Control and SCADA

Collins designs and integrates state-of-the-art rail control solutions using our ARINC Advanced Information Management (AIM®) platform. AIM serves as an end-to-end solution for all rail control requirements, including SCADA, Centralized Traffic Control, Positive Train Control (PTC) and control center integration. Highly flexible and feature-rich, AIM enables railroads to maximize operational efficiency, cost-effectiveness and safety, all while providing an environment protected by the latest tools and techniques in cybersecurity.

KEY AREAS OF EXPERTISE

- Train monitoring and control
- Automatic train tracking
- Automatic route setting/ automatic routing
- Automatic traffic regulation and schedule deviation
- Schedule management
- Integrated yard management
- Bulletins, authorities and restrictions management
- Employee in Charge (EIC) terminals
- Emergency Operating Procedures (EOP)
- Power planning
- Playback and simulation
- Data acquisition
- Interface integration

---

[121] *Central Equipment & Maintenance Facility (CEMOF)*, CALTRAIN, https://www.caltrain.com/projects/central-equipment-maintenance-facility-cemof (last visited July 7, 2025).

[122] *Caltrain: Behind the Scenes of a Major Service Disruption*, CALTRAIN, https://www.caltrain.com/rider-information/caltrain-behind-scenes-major-service-disruption (last visited July 7, 2025).

[123] *Intelligence-Based Rail Solutions*, COLLINS AEROSPACE, [https://web.archive.org/web/20211122013021/https://www.collinsaerospace.com/-/media/project/collinsaerospace/collinsaerospace-website/product-assets/marketing/r/rail/arinc-rail-solutions-for-passengers.pdf?rev=e7e5ddbff2de4154ba265f03e27f14d3] (last visited July 7, 2025); *see also Advanced Information Management (AIM) Rail Dispatch*, WABTEC, https://www.wabteccorp.com/digital-intelligence/signaling-and-train-control/dispatch/advanced-information-management-aim-rail-dispatch (last visited July 7, 2025).

ROBINS KAPLAN LLP
ATTORNEYS AT LAW
SILICON VALLEY

207. Caltrain has implemented and used and continues to use the RailwayNet^{SM} system with EEPS and/or EEPS-like functionality and/or the AIM system with EEPS and/or EEPS-like functionality or any same or similar systems or methods.[124]

208. Caltrain implemented and used and continues to use the RailwayNet^{SM} system with EEPS and/or EEPS-like functionality and/or the AIM system with EEPS and/or EEPS-like functionality or any same or similar systems or methods as a SaaS and/or IaaS—a software/infrastructure as a service—product that provides "full-featured network management and infrastructure, hardware, network, operating systems, and applications for fault, performance, security and configuration management."[125]

209. The RailwayNet^{SM} system with EEPS and/or EEPS-like functionality and/or the AIM system with EEPS and/or EEPS-like functionality or any same or similar systems or methods is advertised to help facilitate the increases in safety and reliability that train control systems provide.[126]

210. The RailwayNet^{SM} system with EEPS and/or EEPS-like functionality and/or the AIM system with EEPS and/or EEPS-like functionality or any same or similar systems or methods, which Caltrain implemented and used and continues to use, improves rail safety. More particularly,

---

[124] ARINC MAINTENANCE AND SUPPORT SERVICES, JPB BOARD OF DIRECTORS at 2 (Sept. 5, 2019) (available at https://www.caltrain.com/media/2443/download); MODERNIZATION PROGRAM PENINSULA CORRIDOR ELECTRIFICATION PROJECT (PCEP): JULY 2017 MONTHLY PROGRESS REPORT, CALTRAIN at 18-1 (July 31, 2017) (available at https://www.caltrain.com/media/616/download?inline); MODERNIZATION PROGRAM PENINSULA CORRIDOR ELECTRIFICATION PROJECT (PCEP): APRIL 2017 MONTHLY PROGRESS REPORT (April 30, 2017) at 17-1 (available at https://caltrain.com/media/613/download?inline); *Peninsula Corridor Electrification Project*, TYLIN, https://www.tylin.com/work/projects/peninsula-corridor-electrification-project (last visited July 7, 2025) ("We are also providing implementation management services to oversee the design, development, testing, and commissioning of the Office SCADA systems based on the Advanced Integration Management (AIM) system supplied by Wabtec (formerly ARINC), the system integrator."); *Caltrain Railroad Company Train Collision with On-Track Equipment and Derailment and Fire, National Transportation Safety Board Track and Engineering Group Chairman Factual Report*, RRD22MR007 at 58 (Sept. 9, 2022) ("Meetings with SEPTA and Wabtec (Who recently purchased the Rockwell Collins dispatch system known as ARINC used at Caltrain) were held recently. The use of a single code for an RWIC to provide to the dispatcher is essentially "'turnkey.'"); *Caltrain Passenger Train Collision with Hi-rail Construction Vehicles, National Transportation Safety Board,* RIR-24-01 at 11 (Feb. 27, 2024).

[125] White Paper at 6.

[126] *See, e.g., Amtrak signs nationwide contract for Rockwell Collins' ARINC RailwayNet^{SM} Positive Train Control service*, COLLINS AEROSPACE (Sep. 6, 2017), https://rockwellcollins.com/-/media/Files/Unsecure/Services-And-Support/Information-Management/ARINC-Rail/RC_Amtrak-Press-Release_09-06-17.ashx; *RailwayNet Positive Train Control Communication Solution*, WABTEC, https://www.wabteccorp.com/digital-intelligence/signaling-and-train-control/communications/railwaynet-positive-train-control-communication-solution (last visited July 7, 2025).

"[t]his system refers to communication-based/processor-based train control technology designed to address a number of rail safety issues, including train-to-train collisions, over-speed derailments, incursions into established work-zone limits, and train movement through a main-line switch that is in an improper position."[127]

211. The RailwayNet℠ system with EEPS and/or EEPS-like functionality and/or the AIM system with EEPS and/or EEPS-like functionality or any same or similar systems or methods was implemented and used and continues to be used throughout Caltrain's routes.[128]

212. As explained below, the RailwayNet℠ system with EEPS and/or EEPS-like functionality and/or the AIM system with EEPS and/or EEPS-like functionality or any same or

[127] White Paper at 3.

[128] ARINC MAINTENANCE AND SUPPORT SERVICES, JPB BOARD OF DIRECTORS at 2 (Sept. 5, 2019) (available at https://www.caltrain.com/media/2443/download); MODERNIZATION PROGRAM PENINSULA CORRIDOR ELECTRIFICATION PROJECT (PCEP): JULY 2017 MONTHLY PROGRESS REPORT, CALTRAIN at 18-1 (July 31, 2017) (available at https://www.caltrain.com/media/616/download?inline); MODERNIZATION PROGRAM PENINSULA CORRIDOR ELECTRIFICATION PROJECT (PCEP): APRIL 2017 MONTHLY PROGRESS REPORT (April 30, 2017) at 17-1 (available at https://caltrain.com/media/613/download?inline); *Peninsula Corridor Electrification Project*, TYLIN, https://www.tylin.com/work/projects/peninsula-corridor-electrification-project (last visited July 7, 2025) ("We are also providing implementation management services to oversee the design, development, testing, and commissioning of the Office SCADA systems based on the Advanced Integration Management (AIM) system supplied by Wabtec (formerly ARINC), the system integrator."); *Caltrain Railroad Company Train Collision with On-Track Equipment and Derailment and Fire, National Transportation Safety Board Track and Engineering Group Chairman Factual Report*, RRD22MR007 at 58 (Sept. 9, 2022) ("Meetings with SEPTA and Wabtec (Who recently purchased the Rockwell Collins dispatch system known as ARINC used at Caltrain) were held recently. The use of a single code for an RWIC to provide to the dispatcher is essentially "'turnkey.'"); *Caltrain Passenger Train Collision with Hi-rail Construction Vehicles, National Transportation Safety Board,* RIR-24-01 at 11 (Feb. 27, 2024).

ROBINS KAPLAN LLP
ATTORNEYS AT LAW
SILICON VALLEY

similar systems or methods is a hosted network, messaging and application platform, designed to assist operators in meeting the requirements mandated by the Rail Safety Improvement Act of 2008 (the "Act"). The Act directs the Federal Railroad Administration (FRA) to mandate new regulations focused on railroad safety. When used in conjunction with the operator's train control infrastructure, the RailwayNet^{SM} system with EEPS and/or EEPS-like functionality and/or the AIM system with EEPS and/or EEPS-like functionality or any same or similar systems or methods helps facilitate the increases in safety and reliability.[129]

213. The RailwayNet^{SM} system with EEPS and/or EEPS-like functionality and/or the AIM system with EEPS and/or EEPS-like functionality or any same or similar systems or methods includes an "integration server and software" that "provides connectivity between the railroad IT systems and the hosted back-office components."[130] The integration server provides an interface with various system components.

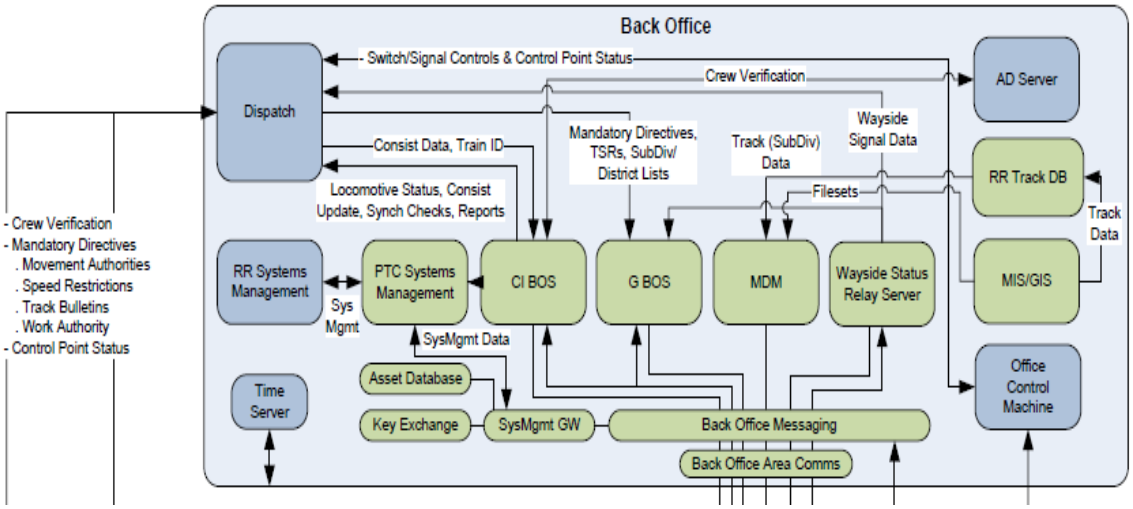

[129] *See, e.g., Amtrak signs nationwide contract for Rockwell Collins' ARINC RailwayNet^{SM} Positive Train Control service*, COLLINS AEROSPACE (Sep. 6, 2017), https://rockwellcollins.com/-/media/Files/Unsecure/Services-And-Support/Information-Management/ARINC-Rail/RC_Amtrak-Press-Release_09-06-17.ashx.

[130] *See* White Paper at 8 (illustrating "AIM® integration server").

ROBINS KAPLAN LLP
ATTORNEYS AT LAW
SILICON VALLEY

AIM® integration server

The ARINC RailwayNet integrations server and software provides connectivity between the railroad IT systems and the hosted back-office components. The functions of this application include:

- Interface with customer's IT gateway
- Interface with back office
- Manage crew authentication through the customer's IT gateway
- Functions to assign train ID to trains based on the clearance number
- Functions to manage train consist through the customer's IT gateway
- Functions to track, display, and store events and alarms

Centralized Traffic Control and SCADA

Collins designs and integrates state-of-the-art rail control solutions using our ARINC Advanced Information Management (AIM®) platform. AIM serves as an end-to-end solution for all rail control requirements, including SCADA, Centralized Traffic Control, Positive Train Control (PTC) and control center integration. Highly flexible and feature-rich, AIM enables railroads to maximize operational efficiency, cost-effectiveness and safety, all while providing an environment protected by the latest tools and techniques in cybersecurity.

KEY AREAS OF EXPERTISE

- Train monitoring and control
- Automatic train tracking
- Automatic route setting/ automatic routing
- Automatic traffic regulation and schedule deviation
- Schedule management
- Integrated yard management
- Bulletins, authorities and restrictions management
- Employee in Charge (EIC) terminals
- Emergency Operating Procedures (EOP)
- Power planning
- Playback and simulation
- Data acquisition
- Interface integration

214. The RailwayNet^{SM} system with EEPS and/or EEPS-like functionality and/or the AIM system with EEPS and/or EEPS-like functionality or any same or similar systems or methods, as implemented and used and continues to be used by Caltrain, provides the network connections and office applications required to exchange critical information among railroads and their partner short line commuter railroads. It is available on a subscription basis as hosted SaaS (software as a service) and IaaS (infrastructure as a service) solutions, and messaging from the back office to the locomotive through VHF, cellular, and Wi-Fi is also available.[131]

215. The RailwayNet^{SM} system with EEPS and/or EEPS-like functionality and/or the AIM system with EEPS and/or EEPS-like functionality or any same or similar systems or methods, as implemented and used and continues to be used by Caltrain, further controls plural railways and a plurality of railway traffic interlocks. Specifically, Centralized Train Control systems, such as that employed by Caltrain and its implementation and use of the RailwayNet^{SM} system with EEPS and/or EEPS-like functionality and/or the AIM system with EEPS and/or EEPS-like functionality or any same or similar systems or methods "consists of a centralized train dispatcher's office that

[131] *New from Rockwell Collins: Shared-network PTC platform*, RAILWAY AGE 14 (July 2016), https://issuu.com/railwayage/docs/july_2016_railway_age; *RailwayNet Positive Train Control Communication Solution*, WABTEC, https://www.wabteccorp.com/digital-intelligence/signaling-and-train-control/communications/railwaynet-positive-train-control-communication-solution (last visited July 7, 2025).

ROBINS KAPLAN LLP
ATTORNEYS AT LAW
SILICON VALLEY

controls railroad interlocking and traffic flows in portions of the rail system designated as CTC territory."[132] Train dispatchers in the control center have control over all interlockings on Caltrain's railroads.[133]

216. Caltrain implemented and used and continues to use the RailwayNet^{SM} system with EEPS and/or EEPS-like functionality and/or the AIM system with EEPS and/or EEPS-like functionality or any same or similar systems or methods—a hosted network, messaging and application platform as amended—throughout Caltrain's routes.[134]

217. Accordingly, Caltrain's implementation and use of the RailwayNet^{SM} system with EEPS and/or EEPS-like functionality and/or the AIM system with EEPS and/or EEPS-like functionality or any same or similar systems or methods is a "railway control apparatus for centralized control of a centrally controllable railway network including plural railways and a plurality of railway interlocks dispersed in said plural railways."

218. Caltrain's implementation and use of the RailwayNet^{SM} system with EEPS and/or EEPS-like functionality and/or the AIM system with EEPS and/or EEPS-like functionality or any same or similar systems or methods includes "a processor for controlling a plurality of track sections in the railway network, wherein each track section is associated with a corresponding

---

[132] *CTC*, WIKIPEDIA, https://en.wikipedia.org/wiki/Centralized_traffic_control.

[133] THE CALTRAIN CORRIDOR VISION PLAN: APPENDIX A, SAN FRANCISCO BAY AREA PLANNING AND URBAN RESEARCH ASSOCIATION (2016) at 5, n. 5 ("On the Caltrain corridor, "interlocking" is generally synonymous with "control point," i.e., a location in a Centralized Traffic Control (CTC) railroad network with signals and turnouts directly controlled by dispatchers.") (available at https://www.spur.org/sites/default/files/2017-02/Appendix_A_Existing_Conditions_and_Methodology.pdf).

[134] ARINC MAINTENANCE AND SUPPORT SERVICES, JPB BOARD OF DIRECTORS at 2 (Sept. 5, 2019) (available at https://www.caltrain.com/media/2443/download); MODERNIZATION PROGRAM PENINSULA CORRIDOR ELECTRIFICATION PROJECT (PCEP): JULY 2017 MONTHLY PROGRESS REPORT, CALTRAIN at 18-1 (July 31, 2017) (available at https://www.caltrain.com/media/616/download?inline); MODERNIZATION PROGRAM PENINSULA CORRIDOR ELECTRIFICATION PROJECT (PCEP): APRIL 2017 MONTHLY PROGRESS REPORT (April 30, 2017) at 17-1 (available at https://caltrain.com/media/613/download?inline); *Peninsula Corridor Electrification Project*, TYLIN, https://www.tylin.com/work/projects/peninsula-corridor-electrification-project (last visited July 7, 2025) ("We are also providing implementation management services to oversee the design, development, testing, and commissioning of the Office SCADA systems based on the Advanced Integration Management (AIM) system supplied by Wabtec (formerly ARINC), the system integrator."); *Caltrain Railroad Company Train Collision with On-Track Equipment and Derailment and Fire, National Transportation Safety Board Track and Engineering Group Chairman Factual Report*, RRD22MR007 at 58 (Sept. 9, 2022) ("Meetings with SEPTA and Wabtec (Who recently purchased the Rockwell Collins dispatch system known as ARINC used at Caltrain) were held recently. The use of a single code for an RWIC to provide to the dispatcher is essentially "'turnkey.'"); *Caltrain Passenger Train Collision with Hi-rail Construction Vehicles, National Transportation Safety Board,* RIR-24-01 at 11 (Feb. 27, 2024).

ROBINS KAPLAN LLP
ATTORNEYS AT LAW
SILICON VALLEY

ROBINS KAPLAN LLP
ATTORNEYS AT LAW
SILICON VALLEY

interlock and is disposed in any of said plural railways of said railway network that is managed by centralized control operation from the railway control apparatus, the processor controlling, by said centralized control operation, one or more interlocks amongst the plurality of railway interlocks dispersed in said plural railways of said railway network, to block railway traffic to one or more specified track sections."

219. The RailwayNet[SM] system with EEPS and/or EEPS-like functionality and/or the AIM system with EEPS and/or EEPS-like functionality or any same or similar systems or methods, which Caltrain implemented and used and continues to use, improves rail safety. More specifically, "[t]his system refers to ***communication-based/processor-based*** train control technology designed to address a number of rail safety issues, including train-to-train collisions, over-speed derailments, incursions into established work-zone limits, and train movement through a main-line switch that is in an improper position."[135]

220. The RailwayNet[SM] system with EEPS and/or EEPS-like functionality and/or the AIM system with EEPS and/or EEPS-like functionality or any same or similar systems or methods includes an "integration server and software" that "provides connectivity between the railroad IT systems and the hosted back-office components."[136] The integration server provides an interface with various system components.

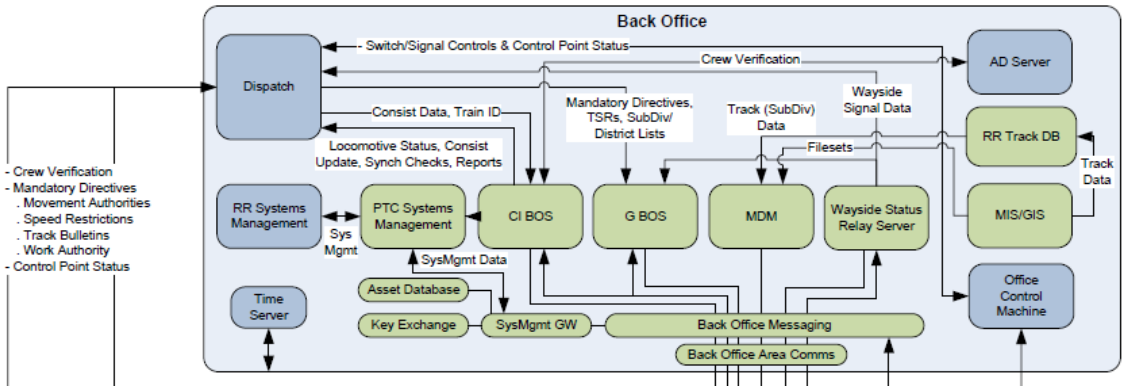

[135] White Paper at 3 (emphasis added).
[136] *See* White Paper at 8 (illustrating "AIM® integration server").

AIM® integration server

The ARINC RailwayNet integrations server and software provides connectivity between the railroad IT systems and the hosted back-office components. The functions of this application include:

- Interface with customer's IT gateway
- Interface with back office
- Manage crew authentication through the customer's IT gateway
- Functions to assign train ID to trains based on the clearance number
- Functions to manage train consist through the customer's IT gateway
- Functions to track, display, and store events and alarms

Centralized Traffic Control and SCADA

Collins designs and integrates state-of-the-art rail control solutions using our ARINC Advanced Information Management (AIM®) platform. AIM serves as an end-to-end solution for all rail control requirements, including SCADA, Centralized Traffic Control, Positive Train Control (PTC) and control center integration. Highly flexible and feature-rich, AIM enables railroads to maximize operational efficiency, cost-effectiveness and safety, all while providing an environment protected by the latest tools and techniques in cybersecurity.

KEY AREAS OF EXPERTISE

- Train monitoring and control
- Automatic train tracking
- Automatic route setting/ automatic routing
- Automatic traffic regulation and schedule deviation
- Schedule management
- Integrated yard management
- Bulletins, authorities and restrictions management
- Employee in Charge (EIC) terminals
- Emergency Operating Procedures (EOP)
- Power planning
- Playback and simulation
- Data acquisition
- Interface integration

221. The RailwayNet[SM] system with EEPS and/or EEPS-like functionality and/or the AIM system with EEPS and/or EEPS-like functionality or any same or similar systems or methods, as implemented and used and continues to be used by Caltrain, provides the network connections and office applications required to exchange critical information among railroads. It is available on a subscription basis as hosted SaaS (software as a service) and IaaS (infrastructure as a service) solutions, and messaging from the back office to the locomotive through VHF, cellular, and Wi-Fi is also available.[137]

222. The RailwayNet[SM] system with EEPS and/or EEPS-like functionality and/or the AIM system with EEPS and/or EEPS-like functionality or any same or similar systems or methods, as implemented and used and continues to be used by Caltrain, further controls plural railways and a plurality of railway traffic interlocks. Specifically, Centralized Train Control systems, such as that employed by Caltrain and its implementation of the RailwayNet[SM] system with EEPS and/or EEPS-like functionality and/or the AIM system with EEPS and/or EEPS-like functionality or any

[137] *New from Rockwell Collins: Shared-network PTC platform*, RAILWAY AGE 14 (July 2016), https://issuu.com/railwayage/docs/july_2016_railway_age; *RailwayNet Positive Train Control Communication Solution*, WABTEC, https://www.wabteccorp.com/digital-intelligence/signaling-and-train-control/communications/railwaynet-positive-train-control-communication-solution (last visited July 7, 2025).

ROBINS KAPLAN LLP
ATTORNEYS AT LAW
SILICON VALLEY

same or similar systems or methods "consists of a centralized train dispatcher's office that controls railroad interlocking and traffic flows in portions of the rail system designated as CTC territory."[138] Train dispatchers in the control center have control over all interlockings on Caltrain's railroads.[139]

223. Caltrain implemented and used and continues to use the RailwayNet^{SM} system with EEPS and/or EEPS-like functionality and/or the AIM system with EEPS and/or EEPS-like functionality or any same or similar systems or methods—a hosted network, messaging and application platform as amended—throughout Caltrain's routes.[140]

224. The RailwayNet^{SM} system with EEPS and/or EEPS-like functionality and/or the AIM system with EEPS and/or EEPS-like functionality or any same or similar systems or methods, as implemented and used and continues to be used by Caltrain, uses "track and time" in which "[b]efore granting track and time authority, the dispatcher must apply a 'block' through the dispatching system to prevent train movement into the limits."[141]

225. The RailwayNet^{SM} system with EEPS and/or EEPS-like functionality and/or the AIM system with EEPS and/or EEPS-like functionality or any same or similar systems or methods, as implemented and used and continues to be used by Caltrain, has the ability to take tracks out of

---

[138] *CTC*, WIKIPEDIA, https://en.wikipedia.org/wiki/Centralized_traffic_control.

[139] THE CALTRAIN CORRIDOR VISION PLAN: APPENDIX A, SAN FRANCISCO BAY AREA PLANNING AND URBAN RESEARCH ASSOCIATION (2016) at 5, n. 5 ("On the Caltrain corridor, "interlocking" is generally synonymous with "control point," i.e., a location in a Centralized Traffic Control (CTC) railroad network with signals and turnouts directly controlled by dispatchers.") (available at https://www.spur.org/sites/default/files/2017-02/Appendix_A_Existing_Conditions_and_Methodology.pdf).

[140] ARINC MAINTENANCE AND SUPPORT SERVICES, JPB BOARD OF DIRECTORS at 2 (Sept. 5, 2019) (available at https://www.caltrain.com/media/2443/download); MODERNIZATION PROGRAM PENINSULA CORRIDOR ELECTRIFICATION PROJECT (PCEP): JULY 2017 MONTHLY PROGRESS REPORT, CALTRAIN at 18-1 (July 31, 2017) (available at https://www.caltrain.com/media/616/download?inline); MODERNIZATION PROGRAM PENINSULA CORRIDOR ELECTRIFICATION PROJECT (PCEP): APRIL 2017 MONTHLY PROGRESS REPORT (April 30, 2017) at 17-1 (available at https://caltrain.com/media/613/download?inline); *Peninsula Corridor Electrification Project*, TYLIN, https://www.tylin.com/work/projects/peninsula-corridor-electrification-project (last visited July 7, 2025) ("We are also providing implementation management services to oversee the design, development, testing, and commissioning of the Office SCADA systems based on the Advanced Integration Management (AIM) system supplied by Wabtec (formerly ARINC), the system integrator."); *Caltrain Railroad Company Train Collision with On-Track Equipment and Derailment and Fire, National Transportation Safety Board Track and Engineering Group Chairman Factual Report*, RRD22MR007 at 58 (Sept. 9, 2022) ("Meetings with SEPTA and Wabtec (Who recently purchased the Rockwell Collins dispatch system known as ARINC used at Caltrain) were held recently. The use of a single code for an RWIC to provide to the dispatcher is essentially "'turnkey.'"); *Caltrain Passenger Train Collision with Hi-rail Construction Vehicles, National Transportation Safety Board,* RIR-24-01 at 11 (Feb. 27, 2024).

[141] Caltrain Passenger Train Collision with Hi-rail Construction Vehicles, National Transportation Safety Board, RIR-24-01 at 11 (Feb. 27, 2024).

ROBINS KAPLAN LLP
ATTORNEYS AT LAW
SILICON VALLEY

ROBINS KAPLAN LLP
ATTORNEYS AT LAW
SILICON VALLEY

service and/or place track sections in "foul time" as an example of a "processor controlling, by said centralized control operation one or more interlocks dispersed in said plural railways of said railway network, to block railway traffic to one or more specified track sections" as recited in this claim element.

226. Specifically, FRA regulations 49 C.F.R. § 214.323 defines "foul time" as "a method of establishing working limits on controlled track in which a. . . [railway field worker] is notified by the train dispatcher or control operator that ***no trains will operate within a specific segment of controlled track until the . . . [railway field worker] reports clear of the track***." (Emphasis added).

227. Caltrain's implementation and use of the RailwayNet^{SM} system with EEPS and/or EEPS-like functionality and/or the AIM system with EEPS and/or EEPS-like functionality or any same or similar systems or methods has the ability to take tracks out of service and/or place tracks in foul time.[142]

228. Because Caltrain, through its implementation and use of the RailwayNet^{SM} system with EEPS and/or EEPS-like functionality and/or the AIM system with EEPS and/or EEPS-like functionality or any same or similar systems or methods, has the ability to take tracks out of service and/or place tracks in foul time, it includes the capability to "block railway traffic to one or more specified track sections."

229. Moreover, in order to place a track segment in "foul time," the system must contain "a processor for controlling a plurality of track sections in the railway network, wherein each track section is associated with a corresponding interlock and is disposed in any of said plural railways of said railway network that is managed by centralized control operation from the railway control apparatus, the processor controlling, by said centralized control operation, one or more interlocks

[142] *See, e.g., Caltrain Railroad Company Train Collision with On-Track Equipment and Derailment and Fire, National Transportation Safety Board Track and Engineering Group Chairman Factual Report*, RRD22MR007 at 15 (Sept. 9, 2022) ("The RWIC was asked if he were aware about whether the men or equipment fouled main track one. . . ."); Roadway Worker Protection (RWP) Caltrain Training - Study Guide, Caltrain at 10 ("Form C - Track Out Of Service . . . The track is taken out of service and not available for trains to use unless the RWIC provides permission. . . .) (available at https://www.caltrain.com/media/2098#:~:text=Fouling%20a%20track%2D%20is%20the%20placement%20of,field%20side%20of%20the%20nearest%20running%20rail.&text=safety%20at%20least%2015%20seconds%20prior%20to%20the%20train%20passing%20by%20the%20work%20zone.)

amongst the plurality of railway interlocks dispersed in said plural railways of said railway network" to permit the dispatcher to establish the blocking protection.

230. Caltrain owns and/or operates one or more control centers, including the CEMOF located at 585 Lenzen Avenue, San Jose, California 95126.[143] Control centers are centralized railway control systems using methods to control access to railway tracks configured for centralized control of traffic of a centrally controllable railway network including plural railways and a plurality of railway traffic interlocks dispersed in said plural railways constituting said railway network.

231. Caltrain's control centers, examples of which are shown below, include a number of terminals through which train dispatchers control the movement of trains, including by placing blocks on specified track sections. The below images illustrate.

CEMOF[144]

232. Caltrain's control centers are "the 'nerve center,' of the commuter railroad, where

[143] *See Central Equipment & Maintenance Facility (CEMOF)*, CALTRAIN, https://www.caltrain.com/projects/central-equipment-maintenance-facility-cemof (last visited July 7, 2025).
[144] *Peninsula Corridor Electrification Project*, TYLIN, https://www.tylin.com/work/projects/peninsula-corridor-electrification-project (last visited July 7, 2025).

ROBINS KAPLAN LLP
ATTORNEYS AT LAW
SILICON VALLEY

ROBINS KAPLAN LLP
ATTORNEYS AT LAW
SILICON VALLEY

dispatchers direct and monitor train traffic between San Francisco and Gilroy"[145] and "control[] all train movement on the corridor."[146]

233. The RailwayNet[SM] system with EEPS and/or EEPS-like functionality and/or the AIM system with EEPS and/or EEPS-like functionality or any same or similar systems or methods provides "train monitoring and control," automatic route setting/automatic routing," "automatic traffic regulation," and "bulletins, authorities, and restrictions management," as shown, for example, in the image below.[147] One or more of these functionalities encompasses the claimed "block railway traffic" part.

Centralized Traffic Control and SCADA

Collins designs and integrates state-of-the-art rail control solutions using our ARINC Advanced Information Management (AIM®) platform. AIM serves as an end-to-end solution for all rail control requirements, including SCADA, Centralized Traffic Control, Positive Train Control (PTC) and control center integration. Highly flexible and feature-rich, AIM enables railroads to maximize operational efficiency, cost-effectiveness and safety, all while providing an environment protected by the latest tools and techniques in cybersecurity.

KEY AREAS OF EXPERTISE

- Train monitoring and control
- Automatic train tracking
- Automatic route setting/ automatic routing
- Automatic traffic regulation and schedule deviation
- Schedule management
- Integrated yard management
- Bulletins, authorities and restrictions management
- Employee in Charge (EIC) terminals
- Emergency Operating Procedures (EOP)
- Power planning
- Playback and simulation
- Data acquisition
- Interface integration

234. The RailwayNet[SM] system with EEPS and/or EEPS-like functionality and/or the

[145] *Central Equipment & Maintenance Facility (CEMOF)*, CALTRAIN, https://www.caltrain.com/projects/central-equipment-maintenance-facility-cemof (last visited July 7, 2025).
[146] *Caltrain: Behind the Scenes of a Major Service Disruption*, CALTRAIN, https://www.caltrain.com/rider-information/caltrain-behind-scenes-major-service-disruption (last visited July 7, 2025).
[147] *Intelligence-Based Rail Solutions*, COLLINS AEROSPACE, [https://web.archive.org/web/20211122013021/https://www.collinsaerospace.com/-/media/project/collinsaerospace/collinsaerospace-website/product-assets/marketing/r/rail/arinc-rail-solutions-for-passengers.pdf?rev=e7e5ddbff2de4154ba265f03e27f14d3] (last visited July 7, 2025); *Advanced Information Management (AIM) Rail Dispatch*, WABTEC, https://www.wabteccorp.com/digital-intelligence/signaling-and-train-control/dispatch/advanced-information-management-aim-rail-dispatch (last visited July 7, 2025).

AIM system with EEPS and/or EEPS-like functionality or any same or similar systems or methods, as implemented and used and continues to be used by Caltrain, is a SaaS and IaaS product that provides "full-featured network management and infrastructure, hardware, network, operating systems, and applications for fault, performance, security and configuration management."[148] Additionally, the RailwayNet^{SM} system with EEPS and/or EEPS-like functionality and/or the AIM system with EEPS and/or EEPS-like functionality or any same or similar systems or methods is "designed to help meet the availability standards required for PTC operations."[149] Because the system is designed to support railroads to meet the PTC requirements, it should be configured to manage train movements, including placing blocks on one or more sections of railway track to prevent trains from traversing the one or more sections of railway track.

235. In order to comply with and implement FRA's recommended regulations (communication-based/processor-based train control technology designed to address a number of railway safety issues including train-to-train collisions, over-speed derailments, incursions into established work-zone limits, and train movement through a main-line switch that is in an improper position) the RailwayNet^{SM} system with EEPS and/or EEPS-like functionality and/or the AIM system with EEPS and/or EEPS-like functionality or any same or similar systems or methods is configured and used to place a block on one or more specified sections of railway track to prevent trains from traversing the one or more sections of railway track.[150]

236. Accordingly, Caltrain's implementation and use of the RailwayNet^{SM} system with EEPS and/or EEPS-like functionality and/or the AIM system with EEPS and/or EEPS-like functionality or any same or similar systems or methods includes "a processor for controlling a plurality of track sections in the railway network, wherein each track section is associated with a corresponding interlock and is disposed in any of said plural railways of said railway network that is managed by centralized control operation from the railway control apparatus, the processor controlling, by said centralized control operation, one or more interlocks amongst the plurality of

[148] White Paper at 6.
[149] *Id.*
[150] *See* Final Report at 14; *see also NEC One-Year Plan 2019* at 233.

ROBINS KAPLAN LLP
ATTORNEYS AT LAW
SILICON VALLEY

railway interlocks dispersed in said plural railways of said railway network, to block railway traffic to one or more specified track sections."

237. Caltrain's implementation and use of the RailwayNet^{SM} system with EEPS and/or EEPS-like functionality and/or the AIM system with EEPS and/or EEPS-like functionality or any same or similar systems or methods further includes "a memory device storing computer-executable instructions."

238. The RailwayNet^{SM} system with EEPS and/or EEPS-like functionality and/or the AIM system with EEPS and/or EEPS-like functionality or any same or similar systems or methods, which Caltrain implemented and used and continues to use, improves rail safety. More specifically, "[t]his system refers to communication-based/processor-based train control technology designed to address a number of rail safety issues, including train-to-train collisions, over-speed derailments, incursions into established work-zone limits, and train movement through a main-line switch that is in an improper position."[151]

239. Because Caltrain's implementation and use of the RailwayNet^{SM} system with EEPS and/or EEPS-like functionality and/or the AIM system with EEPS and/or EEPS-like functionality

[151] White Paper at 3.

ROBINS KAPLAN LLP
ATTORNEYS AT LAW
SILICON VALLEY

ROBINS KAPLAN LLP
ATTORNEYS AT LAW
SILICON VALLEY

or any same or similar systems or methods is a processor-based system, there must be a memory device configured to store computer-executable instructions (*e.g.*, code) for the processor to execute.[152]

240. The RailwayNet[SM] system with EEPS and/or EEPS-like functionality and/or the AIM system with EEPS and/or EEPS-like functionality or any same or similar systems or methods, implemented and used and continues to be used by Caltrain, is a SaaS and IaaS product that provides "full-featured network management and infrastructure, hardware, network, operating systems, and applications for fault, performance, security and configuration management."[153]

241. Moreover, Caltrain's implementation and use of the RailwayNet[SM] system with EEPS and/or EEPS-like functionality and/or the AIM system with EEPS and/or EEPS-like functionality or any same or similar systems or methods utilizes a "back office" which contains numerous databases and servers, which are memory devices used for storing computer-executable instructions related functions performed by the back office.[154] The below image illustrates.[155]

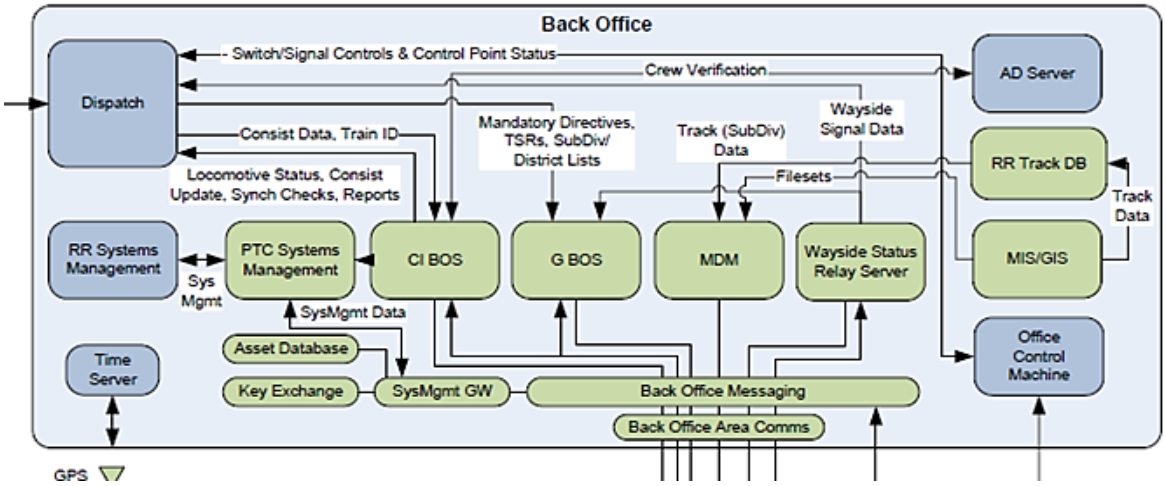

242. Caltrain utilizes a memory device to store the computer-executable instructions for its enhanced employee protection functionality.

243. Accordingly, Caltrain's implementation and use of the RailwayNet[SM] system with EEPS and/or EEPS-like functionality and/or the AIM system with EEPS and/or EEPS-like

---

[152] *Id.*
[153] *Id.* at 6.
[154] Final Report at 14.
[155] *Id.*

functionality or any same or similar systems or methods includes "a memory device storing computer-executable instructions."

244. Caltrain's implementation and use of the RailwayNet^{SM} system with EEPS and/or EEPS-like functionality and/or the AIM system with EEPS and/or EEPS-like functionality or any same or similar systems or methods includes a railway control apparatus that executes computer-executable instructions to "receive a selection of at least one track section amongst the plurality of track sections."

245. Caltrain's implementation and use of the RailwayNet^{SM} system with EEPS and/or EEPS-like functionality and/or the AIM system with EEPS and/or EEPS-like functionality or any same or similar systems or methods is a CTC system which, by definition, is configured and used for centralized control of traffic of a centrally controllable railway network including plural railways and a plurality of railway traffic interlocks dispersed in the plural railways and controls access to the railway tracks.[156]

246. The RailwayNet^{SM} system with EEPS and/or EEPS-like functionality and/or the AIM system with EEPS and/or EEPS-like functionality or any same or similar systems or methods, as implemented and used and continues to be used by Caltrain, uses "track and time" in which "[b]efore granting track and time authority, the dispatcher must apply a 'block' through the dispatching system to prevent train movement into the limits."[157]

247. Further, Caltrain's implementation and use of the RailwayNet^{SM} system with EEPS and/or EEPS-like functionality and/or the AIM system with EEPS and/or EEPS-like functionality or any same or similar systems or methods can place tracks in "foul time."[158]

248. Foul time is defined as "a method of establishing working limits on controlled track

---

[156] *See* THE CALTRAIN CORRIDOR VISION PLAN: APPENDIX A, SAN FRANCISCO BAY AREA PLANNING AND URBAN RESEARCH ASSOCIATION (2016) at 1, 5 (available at https://www.spur.org/sites/default/files/2017-02/Appendix_A_Existing_Conditions_and_Methodology.pdf); *CTC*, WIKIPEDIA, https://en.wikipedia.org/wiki/Centralized_traffic_control (last visited July 7, 2025).

[157] Caltrain Passenger Train Collision with Hi-rail Construction Vehicles, National Transportation Safety Board, RIR-24-01 at 11 (Feb. 27, 2024).

[158] *See, e.g., Caltrain Railroad Company Train Collision with On-Track Equipment and Derailment and Fire, National Transportation Safety Board Track and Engineering Group Chairman Factual Report*, RRD22MR007 at 15 (Sept. 9, 2022) ("The RWIC was asked if he were aware about whether the men or equipment fouled main track one. . . .").

ROBINS KAPLAN LLP
ATTORNEYS AT LAW
SILICON VALLEY

in which a . . . [railway field worker] is notified by the train dispatcher or control operator that no trains will operate within a specific segment of controlled track until the. . . [railway field worker] reports clear of the track." 49 C.F.R. Part 214.7. The "specified segments" referred to in the rule are the "selection of at least one track section amongst the plurality of track sections" referred to in this claim element.

249. In Caltrain's implementation and use of the system with EEPS and/or EEPS-like functionality and/or the AIM system with EEPS and/or EEPS-like functionality or any same or similar systems or methods, a dispatcher can take sections of track out of service and/or put it in foul time.[159]

250. In order for the dispatcher to complete these functions, the system must be able to receive a selection of at least one track section amongst the plurality of track sections.[160]

251. Accordingly, Caltrain's implementation and use of the RailwayNet^{SM} system with EEPS and/or EEPS-like functionality and/or the AIM system with EEPS and/or EEPS-like functionality or any same or similar systems or methods includes a railway control apparatus that executes computer-executable instructions to "receive a selection of at least one track section amongst the plurality of track sections."

252. Caltrain's implementation and use of the RailwayNet^{SM} system with EEPS and/or EEPS-like functionality and/or the AIM system with EEPS and/or EEPS-like functionality or any same or similar systems or methods includes a railway control apparatus that executes computer-executable instructions to "transmit a block signal to the corresponding interlock associated with the at least one selected track section, to place a block on the selected track section by said centralized control operation from the railway control apparatus."

---

[159] *See* Roadway Worker Protection (RWP) Caltrain Training - Study Guide, Caltrain at 10 ("Form C - Track Out Of Service . . . The track is taken out of service and not available for trains to use unless the RWIC provides permission. . . .) (available at https://www.caltrain.com/media/2098#:~:text=Fouling%20a%20track%2D%20is%20the%20placement%20of,field%20side%20of%20the%20nearest%20running%20rail.&text=safety%20at%20least%2015%20seconds%20prior%20to%20the%20train%20passing%20by%20the%20work%20zone.)

[160] *Cf.* 49 C.F.R. § 214.323 (Foul time) ("Working limits established on controlled track through the use of foul time procedures shall comply with the following requirements: . . . (c) The train dispatcher or control operator shall not permit the movement of trains or other on-track equipment into working limits protected by foul time until the . . . [railway field worker] in charge who obtained the foul time has reported clear of the track.").

ROBINS KAPLAN LLP
ATTORNEYS AT LAW
SILICON VALLEY

253. Train dispatchers in Caltrain's control center have control over all interlockings on Caltrain's railroads.[161]

254. The RailwayNet^{SM} system with EEPS and/or EEPS-like functionality and/or the AIM system with EEPS and/or EEPS-like functionality or any same or similar systems or methods, as implemented and used and continues to be used by Caltrain, uses "track and time" in which "[b]efore granting track and time authority, the dispatcher must apply a 'block' through the dispatching system to prevent train movement into the limits."[162]

255. The RailwayNet^{SM} system with EEPS and/or EEPS-like functionality and/or the AIM system with EEPS and/or EEPS-like functionality or any same or similar systems or methods, as implemented and used and continues to be used by Caltrain, that takes tracks out of service and/or places track sections in "foul time" "transmit[s] a block signal to the corresponding interlock associated with the at least one selected track section, to place a block on the selected track section by said centralized control operation from the railway control apparatus." as recited in this claim element.

256. Specifically, FRA regulations 49 C.F.R. § 214.323 defines "foul time" as "a method of establishing working limits on controlled track in which a . . .[railway field worker] is notified by the train dispatcher or control operator that ***no trains will operate within a specific segment of controlled track until the . . . [railway field worker] reports clear of the track***." (emphasis added).

257. Caltrain's implementation and use of the RailwayNet^{SM} system with EEPS and/or EEPS-like functionality and/or the AIM system with EEPS and/or EEPS-like functionality or any same or similar systems or methods has the ability to take tracks out of service and/or place tracks in foul time.[163]

---

[161] THE CALTRAIN CORRIDOR VISION PLAN: APPENDIX A, SAN FRANCISCO BAY AREA PLANNING AND URBAN RESEARCH ASSOCIATION (2016) at 5, n. 5 ("On the Caltrain corridor, "interlocking" is generally synonymous with "control point," i.e., a location in a Centralized Traffic Control (CTC) railroad network with signals and turnouts directly controlled by dispatchers.") (available at https://www.spur.org/sites/default/files/2017-02/Appendix_A_Existing_Conditions_and_Methodology.pdf).

[162] Caltrain Passenger Train Collision with Hi-rail Construction Vehicles, National Transportation Safety Board, RIR-24-01 at 11 (Feb. 27, 2024).

[163] *See* Roadway Worker Protection (RWP) Caltrain Training - Study Guide, Caltrain at 10 ("Form C - Track Out Of Service . . . The track is taken out of service and not available for trains to use unless the RWIC provides

ROBINS KAPLAN LLP
ATTORNEYS AT LAW
SILICON VALLEY

258. Because Caltrain, through its implementation and use of the RailwayNet[SM] system with EEPS and/or EEPS-like functionality and/or the AIM system with EEPS and/or EEPS-like functionality or any same or similar systems or methods, has the ability to place tracks in foul time, it includes an ability to place blocks.

259. Caltrain places blocks by transmitting a block signal to the corresponding interlock associated with the at least one selected track section.[164]

260. The RailwayNet[SM] system with EEPS and/or EEPS-like functionality and/or the AIM system with EEPS and/or EEPS-like functionality or any same or similar systems or methods provides "train monitoring and control," "automatic route setting/automatic routing," "automatic traffic regulation," and "bulletins, authorities, and restrictions management."[165] One or more of these functionalities encompass the claimed ability to place blocks.

ROBINS KAPLAN LLP
ATTORNEYS AT LAW
SILICON VALLEY

---

permission. . . .) (available at https://www.caltrain.com/media/2098#:~:text=Fouling%20a%20track%2D%20is%20the%20placement%20of,field%20side%20of%20the%20nearest%20running%20rail.&text=safety%20at%20least%2015%20seconds%20prior%20to%20the%20train%20passing%20by%20the%20work%20zone.).

[164] *See* THE CALTRAIN CORRIDOR VISION PLAN: APPENDIX A, SAN FRANCISCO BAY AREA PLANNING AND URBAN RESEARCH ASSOCIATION (2016) at 5, n. 5 ("On the Caltrain corridor, "interlocking" is generally synonymous with "control point," i.e., a location in a Centralized Traffic Control (CTC) railroad network with signals and turnouts directly controlled by dispatchers.") (available at https://www.spur.org/sites/default/files/2017-02/Appendix_A_Existing_Conditions_and_Methodology.pdf); *see also* GLOSSARY OF TERMS, CALTRAIN at 1, 3 ("Centralized Traffic Control (CTC) - A remotely controlled block signal system under which train movements are authorized by block signals whose indicators supersede the superiority of trains" . . . . Block Signal - A fixed signal at the entrance of a block to govern trains and engines entering and using that block.") (March 22, 2010) (available at https://caltrain.com/media/1257/download).

[165] *Intelligence-Based Rail Solutions*, COLLINS AEROSPACE, [https://web.archive.org/web/20211122013021/https://www.collinsaerospace.com/-/media/project/collinsaerospace/collinsaerospace-website/product-assets/marketing/r/rail/arinc-rail-solutions-for-passengers.pdf?rev=e7e5ddbff2de4154ba265f03e27f14d3] (last visited July 7, 2025); *Advanced Information Management (AIM) Rail Dispatch*, WABTEC, https://www.wabteccorp.com/digital-intelligence/signaling-and-train-control/dispatch/advanced-information-management-aim-rail-dispatch (last visited July 7, 2025).

ROBINS KAPLAN LLP
ATTORNEYS AT LAW
SILICON VALLEY

Centralized Traffic Control and SCADA

Collins designs and integrates state-of-the-art rail control solutions using our ARINC Advanced Information Management (AIM®) platform. AIM serves as an end-to-end solution for all rail control requirements, including SCADA, Centralized Traffic Control, Positive Train Control (PTC) and control center integration. Highly flexible and feature-rich, AIM enables railroads to maximize operational efficiency, cost-effectiveness and safety, all while providing an environment protected by the latest tools and techniques in cybersecurity.

KEY AREAS OF EXPERTISE

- Train monitoring and control
- Automatic train tracking
- Automatic route setting/ automatic routing
- Automatic traffic regulation and schedule deviation
- Schedule management
- Integrated yard management
- Bulletins, authorities and restrictions management
- Employee in Charge (EIC) terminals
- Emergency Operating Procedures (EOP)
- Power planning
- Playback and simulation
- Data acquisition
- Interface integration

261. The RailwayNet[SM] system with EEPS and/or EEPS-like functionality and/or the AIM system with EEPS and/or EEPS-like functionality or any same or similar systems or methods, as implemented and used and continues to be used by Caltrain, is a SaaS and IaaS product that provides "full-featured network management and infrastructure, hardware, network, operating systems, and applications for fault, performance, security and configuration management."[166] Additionally, the RailwayNet[SM] system with EEPS and/or EEPS-like functionality and/or the AIM system with EEPS and/or EEPS-like functionality or any same or similar systems or methods is "designed to help meet the availability standards required for PTC operations."[167] Because the system is designed to support railroads to meet the PTC requirements, it is configured to manage train movements, including placing blocks on one or more sections of railway track to prevent trains from traversing the one or more sections of railway track.

262. In order to comply with and implement FRA's recommended regulations (communication-based/processor-based train control technology designed to address a number of railway safety issues including train-to-train collisions, over-speed derailments, incursions into established work-zone limits, and train movement through a main-line switch that is in an improper

[166] White Paper at 6.
[167] *Id.*

position), the RailwayNet^{SM} system with EEPS and/or EEPS-like functionality and/or the AIM system with EEPS and/or EEPS-like functionality or any same or similar systems or methods is configured and used to place a block on one or more sections of railway track to prevent trains from traversing the one or more sections of railway track.[168]

263. Accordingly, Caltrain's implementation and use of the RailwayNet^{SM} system with EEPS and/or EEPS-like functionality and/or the AIM system with EEPS and/or EEPS-like functionality or any same or similar systems or methods includes a railway control apparatus that executes computer-executable instructions to "transmit a block signal to the corresponding interlock associated with the at least one selected track section, to place a block on the selected track section by said centralized control operation from the railway control apparatus."

264. Caltrain's implementation and use of the RailwayNet^{SM} system with EEPS and/or EEPS-like functionality and/or the AIM system with EEPS and/or EEPS-like functionality or any same or similar systems or methods includes a railway control apparatus that executes computer-executable instructions to "generate a secret code associated with the at least one selected track section."

265. Caltrain's implementation and use of the RailwayNet^{SM} system with EEPS and/or EEPS-like functionality and/or the AIM system with EEPS and/or EEPS-like functionality or any same or similar systems or methods includes an "Enhanced Employee Protection System."[169]

---

[168] *See* Final Report at 14; *see also NEC One-Year Plan 2019* at 233.

[169] *Caltrain Railroad Company Train Collision with On-Track Equipment and Derailment and Fire*, National Transportation Safety Board Track and Engineering Group Chairman Factual Report, RRD22MR007 at 58 (Sept. 9, 2022); *see also* CALTRAIN SAFETY BRIEFING (April 19, 2023) at 18 (available at https://www.caltrain.com/media/30177/download); PENINSULA CORRIDOR JOINT POWERS BOARD, ANNUAL COMPREHENSIVE FINANCIAL REPORT (FISCAL YEARS ENDED JUNE 30, 2023 AND 2022) at ix (available at https://www.caltrain.com/media/32501); PENINSULA CORRIDOR JOINT POWERS BOARD, ANNUAL COMPREHENSIVE FINANCIAL REPORT (FISCAL YEARS ENDED JUNE 30, 2024 AND 2023) at xiii (available at https://www.caltrain.com/media/34732); Project Monitoring Report (PMR) November 2024: Peninsula Corridor Electrification Project (PCEP) San Francisco to San Jose, CA at A-1 (2024) (available at https://www.caltrain.com/media/35145).

ROBINS KAPLAN LLP
ATTORNEYS AT LAW
SILICON VALLEY

ROBINS KAPLAN LLP
ATTORNEYS AT LAW
SILICON VALLEY

Roadway Worker Protection

- March 10, 2022 Incident – NTSB Investigation
- Changes to Roadway Worker in Charge Training, Processes and Scheduling
- Bus Bridges, Safety Briefings, Planning
- Enhanced Employee Protection Systems

Caltrain

266. As part of this system, Caltrain's implementation and use of the RailwayNet[SM] system with EEPS and/or EEPS-like functionality and/or the AIM system with EEPS and/or EEPS-like functionality or any same or similar systems or methods generates a "release code" or "pin code" associated with a block.[170]

c. Release "Codes"

i. Meetings with SEPTA and Wabtec (Who recently purchased the Rockwell Collins dispatch system known as ARINC used at Caltrain) were held recently. The use of a single code for an RWIC to provide to the dispatcher is essentially "turnkey."

[170] *See, e.g., Caltrain Railroad Company Train Collision with On-Track Equipment and Derailment and Fire*, National Transportation Safety Board Track and Engineering Group Chairman Factual Report, RRD22MR007 at 58 (Sept. 9, 2022); *Caltrain Passenger Train Collision with Hi-rail Construction Vehicles, National Transportation Safety Board,* RIR-24-01 at 11 (Feb. 27, 2024); QUARTERLY PROGRESS REVIEW MEETING NO. 22: DECEMBER 5, 2022, PENINSULA CORRIDOR JOINT POWERS BOARD (JPB)/CALTRAIN at 4 (Dec. 19, 2022).

Caltrain Passenger Train Collision with Hi-rail Construction Vehicles
RIR-24-01

1.7.3 Redundant Safety Protections

Caltrain instituted a redundant safety process for dispatchers requiring them to click a checkbox verifying the release of track and time authority before its release. They also acquired software that will only allow the dispatcher to release track and time authority after both the RWIC and one other authorized person in the work group has entered a special pin code into the system.

Caltrain now requires that a RWIC be physically within the limits of track and time authority when requesting and releasing authority. They also modified On Track Safety Rule 6.3.1 to require the track and time authority form to be initialed by at least one other roadway worker/contractor in the work group confirming that they are clear of the track.

- The safety task force formed after the March 10, 2022 incident continues to meet.
  - A new protocol has been developed that requires both the Roadway Worker in Charge (RWIC) and the contractor's foreman to sign off before track and time protection can be released.
  - A new electronic process has just been implemented that requires a specific electronic code to be transmitted to the dispatcher. Before protection can be released.

267. The "release code" generated is secret. It is unique to the railway worker and not readily available to the dispatcher.[171]

268. Moreover, the RailwayNet[SM] system with EEPS and/or EEPS-like functionality and/or the AIM system with EEPS and/or EEPS-like functionality or any same or similar systems or methods, implemented and used and continues to be used by Caltrain, specifies providing back office infrastructure and messaging, including "[s]torage and delivery of crew and consist information, train IDs and clearances."[172] It further specifies enabling ITC PTC interoperability and compliance with I-ETMS systems.[173] Because I-ETMS systems require communication of crew verification and employee authentication, Caltrain maintains electronic contact addresses of the railway field workers from a rail personnel contact database. The systems messaging functions

[171] *See, e.g., Caltrain Railroad Company Train Collision with On-Track Equipment and Derailment and Fire*, National Transportation Safety Board Track and Engineering Group Chairman Factual Report, RRD22MR007 at 58 (Sept. 9, 2022); *Caltrain Passenger Train Collision with Hi-rail Construction Vehicles, National Transportation Safety Board,* RIR-24-01 at 11 (Feb. 27, 2024).
[172] *See* White Paper at 7.
[173] *See* Final Report at 43.

also include: "[k]ey exchange server," described as "[s]ecurity keys with data store."[174]

A summary of the ARINC RailwayNet PTC hosting service functionality is shown below.

Messaging functions	Description	Included
Back-office messaging	Message transmission for the railroad back office	•*
Inter-office messaging	Message transmission between assets and railroad back offices in support of train initialization	•*
Systems management gateway	Messaging systems management	•
Systems management	Remote asset monitoring and control	Optional
Back-office area communications	Communications infrastructure at the Annapolis facility in support of railroad remote asset connectivity via cellular and internet connections	•
Key exchange server	Security keys with data store	•

269. Moreover, the RailwayNet[SM] system with EEPS and/or EEPS-like functionality and/or the AIM system with EEPS and/or EEPS-like functionality or any same or similar systems or methods, as implemented and used and continues to be used by Caltrain, specifies providing back-office infrastructure and messaging that allows railway workers to communicate, *inter alia,* crew verification and mandatory directives with the dispatch.[175]

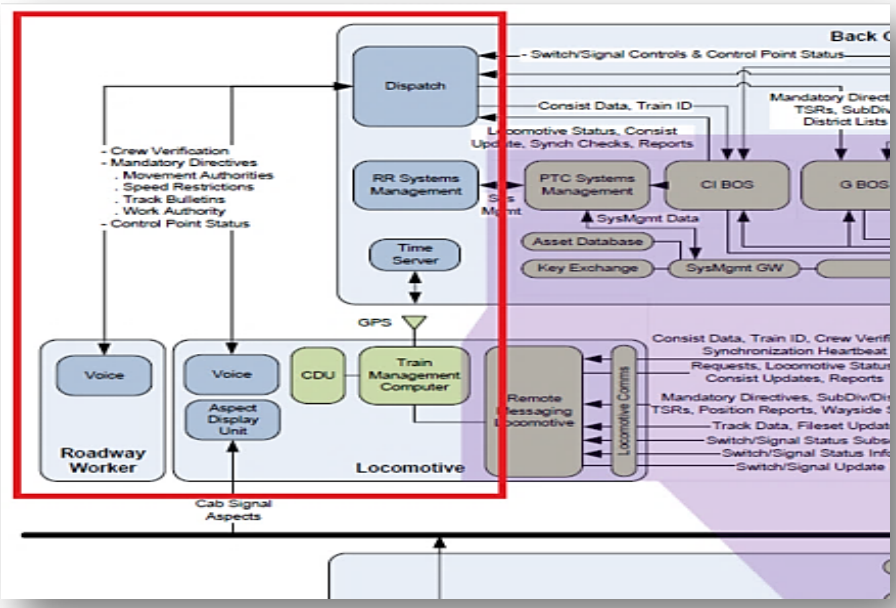

[174] White Paper at 7.
[175] Final Report at 14.

ROBINS KAPLAN LLP
ATTORNEYS AT LAW
SILICON VALLEY

ROBINS KAPLAN LLP
ATTORNEYS AT LAW
SILICON VALLEY

270. The secret code generated by the "back office" is associated with at least one section of track. In Caltrain's implementation and use of the RailwayNet^{SM} system with EEPS and/or EEPS-like functionality and/or the AIM system with EEPS and/or EEPS-like functionality or any same or similar systems or methods, a dispatcher can take a section of track out of service and/or put it in foul time.[176] In order for the dispatcher to complete these functions, the secret code (which must be transmitted to the dispatcher prior to taking an individual track out of service and/or putting it in foul time) must be associated with at least one section of track.

271. Accordingly, Caltrain's implementation and use of the RailwayNet^{SM} system with EEPS and/or EEPS-like functionality and/or the AIM system with EEPS and/or EEPS-like functionality or any same or similar systems or methods includes a railway control apparatus that executes computer-executable instructions to "generate a secret code associated with the at least one selected track section."

272. Caltrain's implementation and use of the RailwayNet^{SM} system with EEPS and/or EEPS-like functionality and/or the AIM system with EEPS and/or EEPS-like functionality or any same or similar systems or methods includes a railway control apparatus that executes computer-executable instructions to "transmit the secret code to a remote user terminal."

273. Caltrain's implementation and use of the RailwayNet^{SM} system with EEPS and/or EEPS-like functionality and/or the AIM system with EEPS and/or EEPS-like functionality or any same or similar systems or methods requires that a railway field worker be provided with a "release code" or a "pin code."[177]

---

[176] *See* Roadway Worker Protection (RWP) Caltrain Training - Study Guide, Caltrain at 10 ("Form C - Track Out Of Service . . . The track is taken out of service and not available for trains to use unless the RWIC provides permission. . . .) (available at https://www.caltrain.com/media/2098#:~:text=Fouling%20a%20track%2D%20is%20the%20placement%20of,field%20side%20of%20the%20nearest%20running%20rail.&text=safety%20at%20least%2015%20seconds%20prior%20to%20the%20train%20passing%20by%20the%20work%20zone.).

[177] *See, e.g., Caltrain Railroad Company Train Collision with On-Track Equipment and Derailment and Fire*, National Transportation Safety Board Track and Engineering Group Chairman Factual Report, RRD22MR007 at 58 (Sept. 9, 2022); *Caltrain Passenger Train Collision with Hi-rail Construction Vehicles, National Transportation Safety Board,* RIR-24-01 at 11 (Feb. 27, 2024); QUARTERLY PROGRESS REVIEW MEETING NO. 22: DECEMBER 5, 2022, PENINSULA CORRIDOR JOINT POWERS BOARD (JPB)/CALTRAIN at 4 (Dec. 19, 2022).

c. Release "Codes"

i. Meetings with SEPTA and Wabtec (Who recently purchased the Rockwell Collins dispatch system known as ARINC used at Caltrain) were held recently. The use of a single code for an RWIC to provide to the dispatcher is essentially "turnkey."

Caltrain Passenger Train Collision with Hi-rail Construction Vehicles
RIR-24-01

1.7.3 Redundant Safety Protections

Caltrain instituted a redundant safety process for dispatchers requiring them to click a checkbox verifying the release of track and time authority before its release. They also acquired software that will only allow the dispatcher to release track and time authority after both the RWIC and one other authorized person in the work group has entered a special pin code into the system.

Caltrain now requires that a RWIC be physically within the limits of track and time authority when requesting and releasing authority. They also modified On Track Safety Rule 6.3.1 to require the track and time authority form to be initialed by at least one other roadway worker/contractor in the work group confirming that they are clear of the track.

- The safety task force formed after the March 10, 2022 incident continues to meet.
  - A new protocol has been developed that requires both the Roadway Worker in Charge (RWIC) and the contractor's foreman to sign off before track and time protection can be released.
  - A new electronic process has just been implemented that requires a specific electronic code to be transmitted to the dispatcher. Before protection can be released.

274. Caltrain provides mobile devices to railway field workers, through which the railway field worker receives the code via remote user terminal, *i.e.*, the mobile device issued to the railway field worker.[178]

275. Accordingly, Caltrain's implementation and use of the RailwayNet[SM] system with EEPS and/or EEPS-like functionality and/or the AIM system with EEPS and/or EEPS-like functionality or any same or similar systems or methods includes a railway control apparatus that executes computer-executable instructions to "transmit the secret code to a remote user terminal."

[178] *See, e.g.*, Roadway Worker Protection (RWP) Caltrain Training - Study Guide, Caltrain at 5 (available at https://www.caltrain.com/media/2098#:~:text=Fouling%20a%20track%2D%20is%20the%20placement%20of,field%20side%20of%20the%20nearest%20running%20rail.&text=safety%20at%20least%2015%20seconds%20prior%20to%20the%20train%20passing%20by%20the%20work%20zone); *Caltrain Passenger Train Collision with Hi-rail Construction Vehicles, National Transportation Safety Board*, RIR-24-01 at 5 (Feb. 27, 2024) ("About 9:58 a.m., the RWIC contacted the dispatcher by phone and released Track and Time Authority . . . .").

ROBINS KAPLAN LLP
ATTORNEYS AT LAW
SILICON VALLEY

ROBINS KAPLAN LLP
ATTORNEYS AT LAW
SILICON VALLEY

276. Therefore, Caltrain, through its implementation and use of the RailwayNet^{SM} system with EEPS and/or EEPS-like functionality and/or the AIM system with EEPS and/or EEPS-like functionality or any same or similar systems or methods, has infringed and continues to infringe at least claim 20 of the ’115 patent.

277. As direct and proximate result of Caltrain’s infringement of the ’115 patent, Railware has been irreparably injured and has been caused significant harm and financial damages.

278. Caltrain has also induced and continues to induce infringement of at least claim 20 of the ’115 patent in violation of 35 U.S.C. § 271(b).

279. Caltrain induces its users, and/or developers of its systems or methods to infringe at least claim 20 of the ’115 patent, and does so with the specific intent, by providing instructions, directions, information, and/or knowledge on how to use its systems or methods and/or incorporate its systems or methods into other products (including the RailwayNet^{SM} system with EEPS and/or EEPS-like functionality and/or the AIM system with EEPS and/or EEPS-like functionality or any same or similar systems or methods).

280. Caltrain had notice of and was aware or should have been aware of its infringement of the ’115 patent as of at least October 21, 2020, or at the latest May 15, 2025.

281. To the extent the marking requirements of 35 U.S.C. § 287 apply, Caltrain had constructive knowledge of the ’115 patent at least since October 21, 2020.

282. Further, Caltrain knew or should have known and received notice of the ’115 patent on at least June 15, 2022, which is the date Railware filed suit against Amtrak for infringement of the ’115 patent, or earlier considering the business relationship between Caltrain and Amtrak, and again on at least July 8, 2024, which is the date Railware filed suit against SEPTA for infringement of the ’115 patent, and again on the dates of any subsequent litigations filed by Railware regarding the Asserted Patents.

283. Further, Caltrain knew or should have known and received notice of the ’115 patent on at least its issue date: June 28, 2022.

284. Further, Caltrain knew or should have known and received notice of the ’115 patent on at least September 8, 2022, which is the date Caltrain issued a report indicating that it had meet

ROBINS KAPLAN LLP
ATTORNEYS AT LAW
SILICON VALLEY

with SEPTA regarding its CTC system, and discussed the "use of a single code for an RWIC to provide to the dispatcher."

285. Further, Caltrain knew or should have known and received notice of the '115 patent as of May 15, 2025, when Caltrain was sent a letter informing it of its infringement of the '115 patent.

286. Caltrain's continued infringement on or after any of these dates is in spite of the objectively high likelihood that its activities constitute infringement of a valid patent, and this risk was either known or so obvious that it should have been known to Caltrain. Thus, Caltrain's continued infringement at least as of October 21, 2020, or at the latest May 15, 2025, is willful and deliberate.

287. Railware has suffered and continues to suffer damages and irreparable harm as a result of Caltrain's past and ongoing infringement. Unless and until Caltrain's infringement is enjoined, Railware will continue to be damaged and irreparably harmed.

288. Railware is entitled to all remedies at law and equity including, but not limited to, an injunction against Caltrain's infringement of the '115 patent pursuant to 35 U.S.C. § 283.

289. Railware is entitled to damages for Caltrain's infringement of the '115 patent including, but not limited to, damages pursuant to 35 U.S.C. §§ 284 and 285.

JURY DEMAND

Railware respectfully requests a jury trial on all triable issues.

REQUEST FOR RELIEF

Railware respectfully asks that the Court enter judgment in its favor as follows:

A. Judgment in favor of Railware and against Caltrain on each cause of action alleged herein;

B. Finding that Caltrain has infringed and is infringing the Asserted Patents;

C. Finding that Caltrain's infringement of the Asserted Patents has been and continues to be willful;

D. Awarding Railware damages adequate to compensate it for Caltrain's past and present infringement, but in no event less than a reasonable royalty;

E. Awarding an accounting and supplemental damages for those acts of infringement committed by Caltrain subsequent to the discovery cut-off date in this action through the date Final Judgment is entered;

F. Ordering that damages for infringement of the Asserted Patents be trebled as provided for by 35 U.S.C. § 284 for Caltrain's willful infringement of the Asserted Patents;

G. Finding that this case is exceptional;

H. Awarding Railware its attorneys' fees and costs, together with prejudgment and post-judgment interest;

I. A preliminary and permanent injunction against Caltrain's continued direct and indirect infringement;

J. To the extent injunctive relief is not awarded, awarding Railware damages adequate to compensate Railware for Caltrain's future infringement, but in no event less than a reasonable royalty; and

K. Any further relief that this Court deems just and proper.

ROBINS KAPLAN LLP
ATTORNEYS AT LAW
SILICON VALLEY

Dated: July 8, 2025

Respectfully submitted,

By: */s/ Li Zhu*

Li Zhu (Bar No. 302210)
LZhu@RobinsKaplan.com
ROBINS KAPLAN LLP
555 Twin Dolphin Drive, Suite 310
Redwood City, California 94065
Tel.: (650) 784-4040
Fax: (650) 784-4041

Bryan J. Vogel (*pro hac vice* forthcoming)
BVogel@RobinsKaplan.com
Derrick J. Carman (*pro hac vice* forthcoming)
DCarman@RobinsKaplan.com
Travis K. Waller (*pro hac vice* forthcoming)
TWaller@RobinsKaplan.com
ROBINS KAPLAN LLP
1325 Avenue of the Americas, Suite 2601
New York, New York 10019
Tel.: (212) 980-7400

Attorneys for Plaintiff
Railware, Inc.

ROBINS KAPLAN LLP
ATTORNEYS AT LAW
SILICON VALLEY