US 20020146097A1

(19) United States

(12) Patent Application Publication (10) Pub. No.: US 2002/0146097 A1

Vuori (43) Pub. Date: Oct. 10, 2002

(54) SHORT VOICE MESSAGE (SVM) SERVICE METHOD, APPARATUS AND SYSTEM

(75) Inventor: Petri Vuori, Salo (FI)

Correspondence Address:
WARE FRESSOLA VAN DER SLUYS & ADOLPHSON, LLP
BRADFORD GREEN BUILDING 5
755 MAIN STREET, P O BOX 224
MONROE, CT 06468 (US)

(73) Assignee: Nokia Mobile Phones Ltd.

(21) Appl. No.: 09/911,078

(22) Filed: Jul. 23, 2001

Related U.S. Application Data

(60) Provisional application No. 60/281,942, filed on Apr. 5, 2001.

Publication Classification

(51) Int. Cl.[7] ..... H04M 1/64

(52) U.S. Cl. ..... 379/88.22

(57) ABSTRACT

Tiresome entry of numerous letters of the alphabet into a hand-held device for assembling a short text message for transmission via a short message service (SMS) to a second terminal is avoided by the sending of a short voice message (SVM). The SVM is recorded in the sending terminal and sent to a SVM service center (SVMSC). The SVMSC may notify the intended recipient of the arrival of the SVM and await acceptance before sending it. The second terminal may then commence a bidirectional communication so that an instant voice message session can be established. Alternatively, the problem can be overcome by converting the spoken SVM to text in the user terminal by means of voice recognition software and sending the converted text to the recipient by means of the traditional SMS infrastructure for display as text or for playback as text converted to voice.

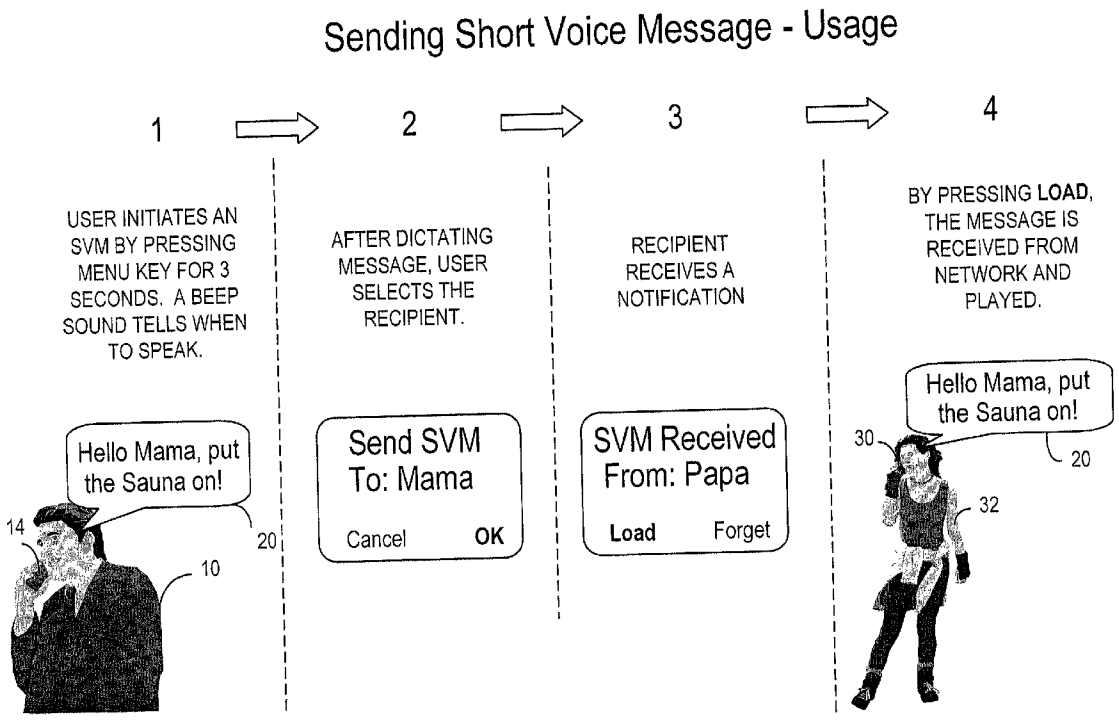

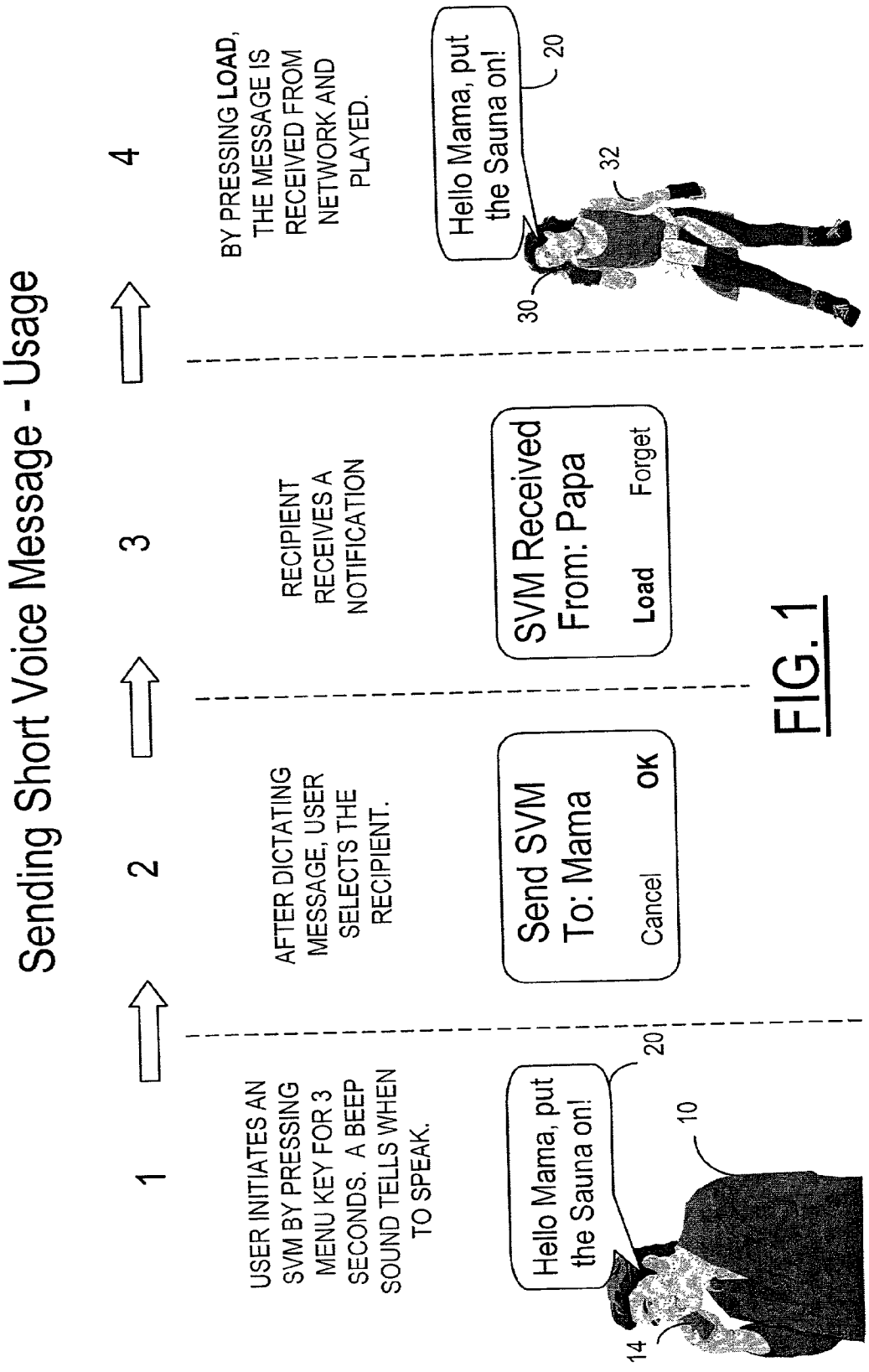
Sending Short Voice Message - Usage
1
USER INITIATES AN SVM BY PRESSING MENU KEY FOR 3 SECONDS. A BEEP SOUND TELLS WHEN TO SPEAK.
Hello Mama, put the Sauna on!
20
10
14
2
AFTER DICTATING MESSAGE, USER SELECTS THE RECIPIENT.
Send SVM To: Mama
Cancel
OK
3
RECIPIENT RECEIVES A NOTIFICATION
SVM Received From: Papa
Load
Forget
4
BY PRESSING LOAD, THE MESSAGE IS RECEIVED FROM NETWORK AND PLAYED.
Hello Mama, put the Sauna on!
20
32
30

FIG. 1

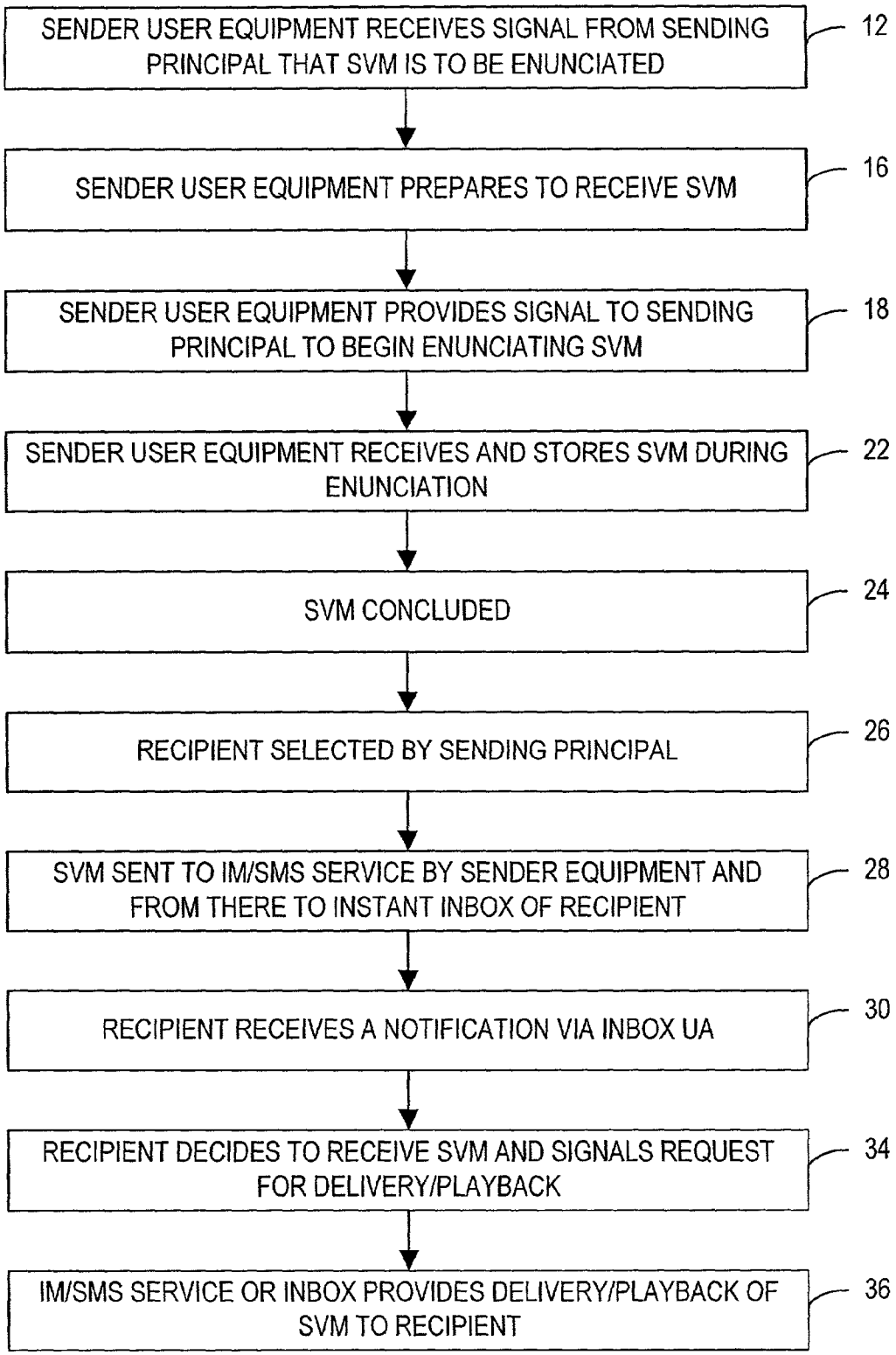
SENDER USER EQUIPMENT RECEIVES SIGNAL FROM SENDING PRINCIPAL THAT SVM IS TO BE ENUNCIATED
12
SENDER USER EQUIPMENT PREPARES TO RECEIVE SVM
16
SENDER USER EQUIPMENT PROVIDES SIGNAL TO SENDING PRINCIPAL TO BEGIN ENUNCIATING SVM
18
SENDER USER EQUIPMENT RECEIVES AND STORES SVM DURING ENUNCIATION
22
SVM CONCLUDED
24
RECIPIENT SELECTED BY SENDING PRINCIPAL
26
SVM SENT TO IM/SMS SERVICE BY SENDER EQUIPMENT AND FROM THERE TO INSTANT INBOX OF RECIPIENT
28
RECIPIENT RECEIVES A NOTIFICATION VIA INBOX UA
30
RECIPIENT DECIDES TO RECEIVE SVM AND SIGNALS REQUEST FOR DELIVERY/PLAYBACK
34
IM/SMS SERVICE OR INBOX PROVIDES DELIVERY/PLAYBACK OF SVM TO RECIPIENT
36

FIG. 2

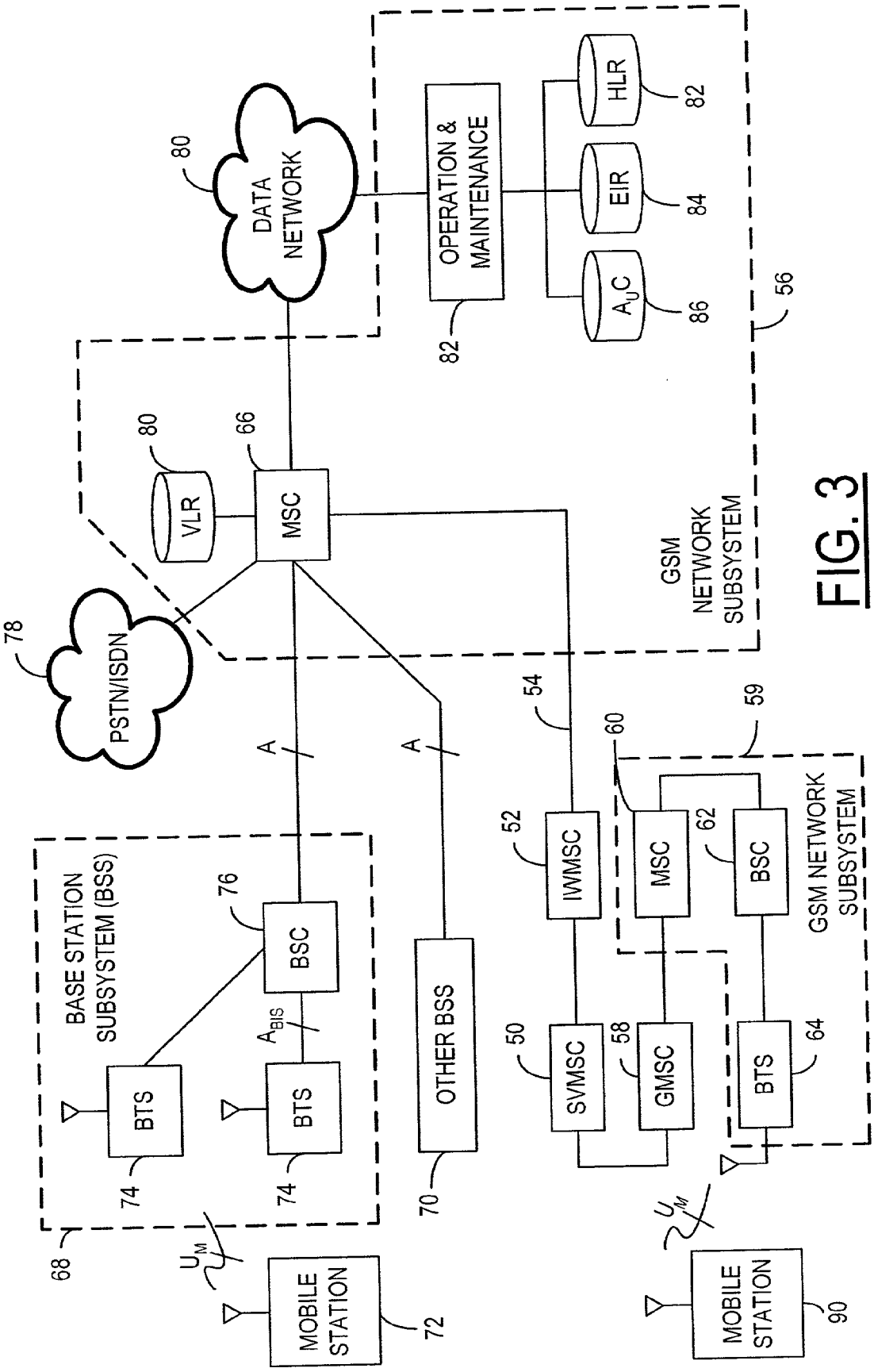
DATA NETWORK
80
OPERATION & MAINTENANCE
82
HLR
82
EIR
84
$A_UC$
86
56
VLR
80
MSC
66
GSM NETWORK SUBSYSTEM
PSTN/ISDN
78
A
A
54
60
59
52
IWMSC
MSC
62
BSC
GSM NETWORK SUBSYSTEM
BASE STATION SUBSYSTEM (BSS)
76
BSC
$A_{BIS}$
BTS
BTS
74
74
68
OTHER BSS
70
50
SVMSC
58
GMSC
BTS
64
$U_M$
$U_M$
MOBILE STATION
72
MOBILE STATION
90

FIG. 3

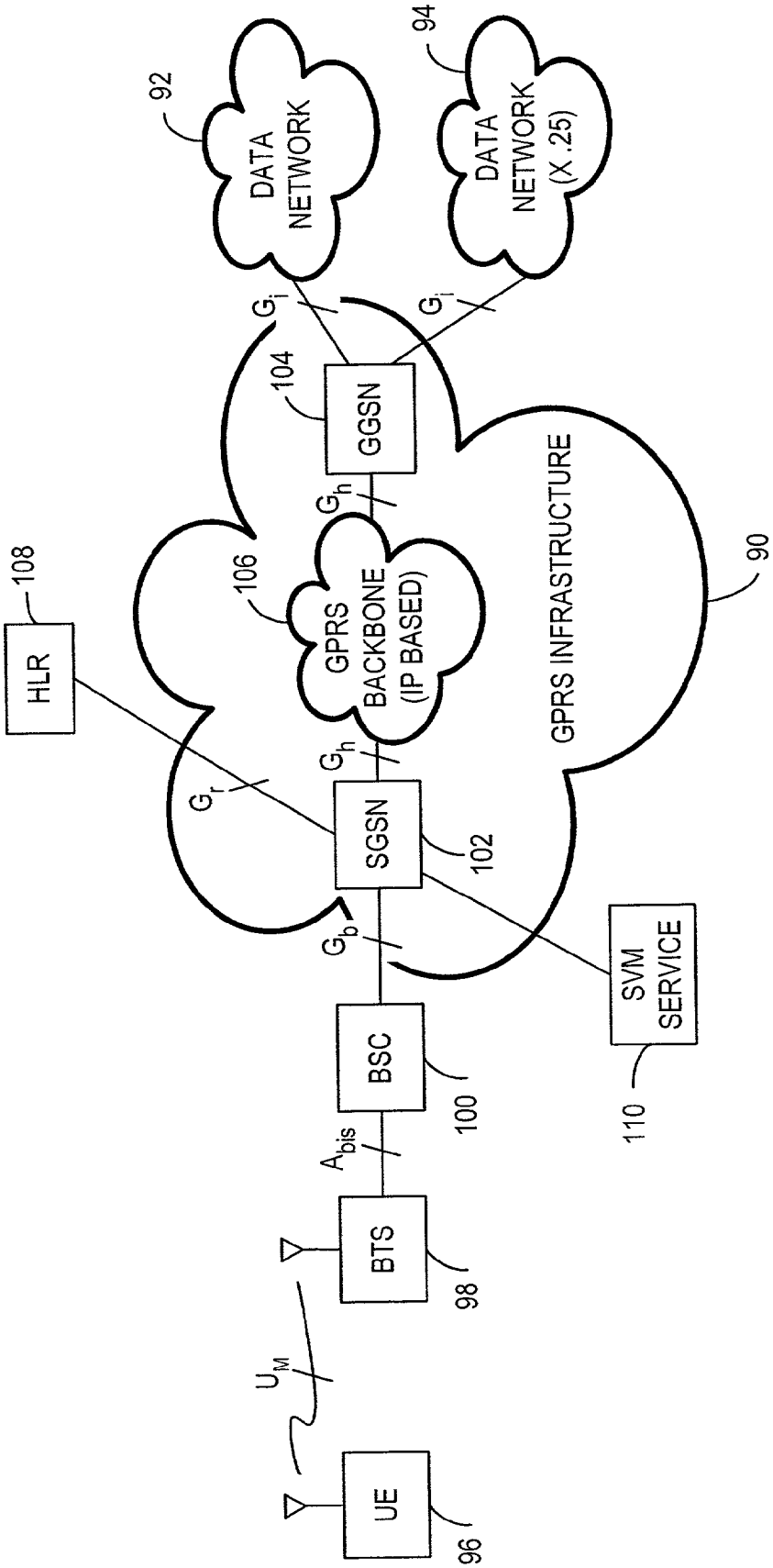
DATA NETWORK
92
DATA NETWORK (X.25)
94
$G_i$
$G_i$
GGSN
104
$G_h$
GPRS BACKBONE (IP BASED)
106
GPRS INFRASTRUCTURE
90
HLR
108
$G_r$
$G_h$
SGSN
102
$G_b$
SVM SERVICE
110
BSC
100
$A_{bis}$
BTS
98
$U_M$
UE
96

FIG. 4

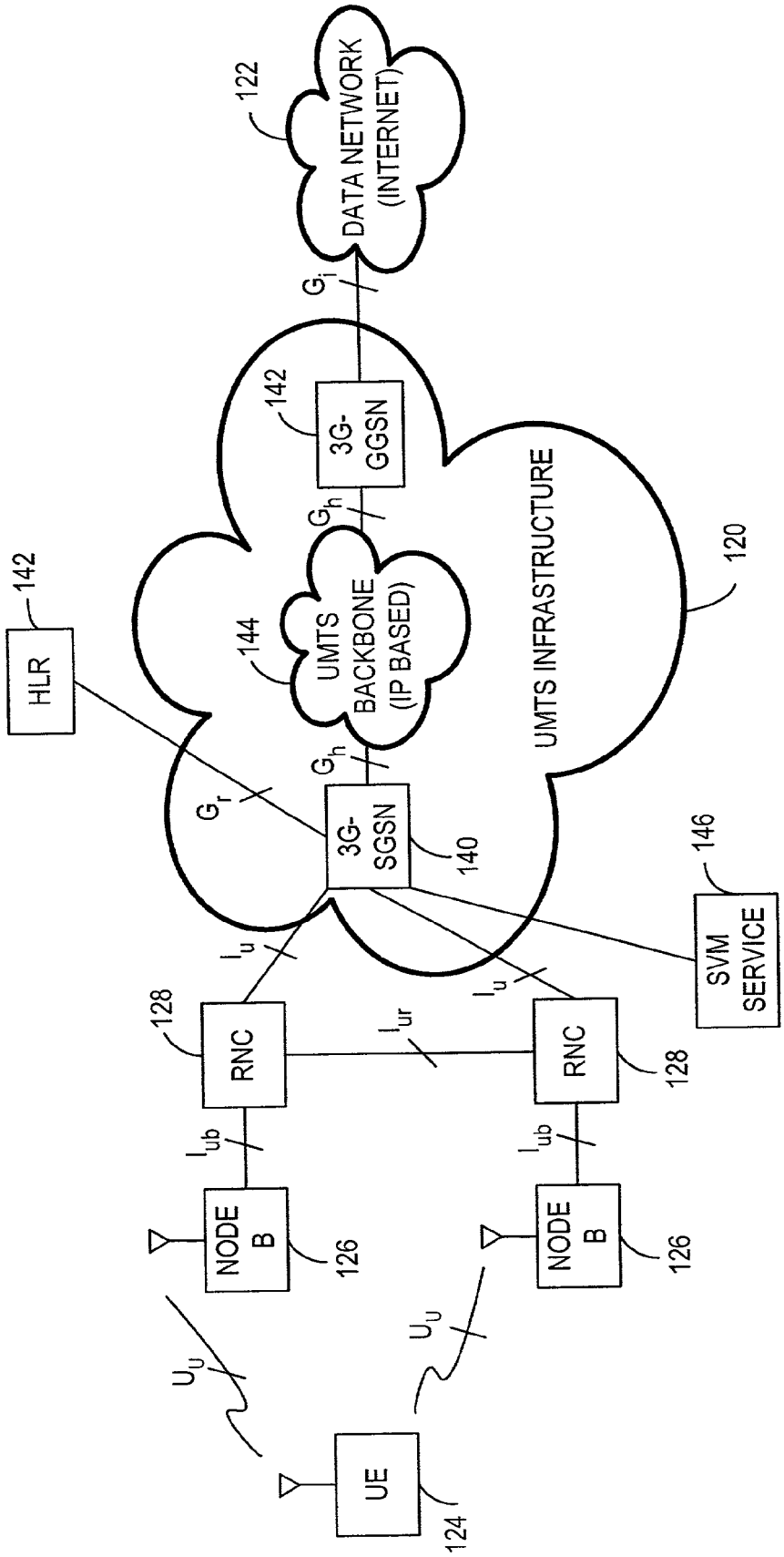
DATA NETWORK (INTERNET)
122
$G_i$
3G-GGSN
142
$G_h$
UMTS BACKBONE (IP BASED)
144
UMTS INFRASTRUCTURE
120
HLR
142
$G_r$
$G_h$
3G-SGSN
140
SVM SERVICE
146
$I_u$
$I_u$
RNC
128
$I_{ur}$
RNC
128
$I_{ub}$
$I_{ub}$
NODE B
126
NODE B
126
$U_U$
$U_U$
UE
124

FIG. 5

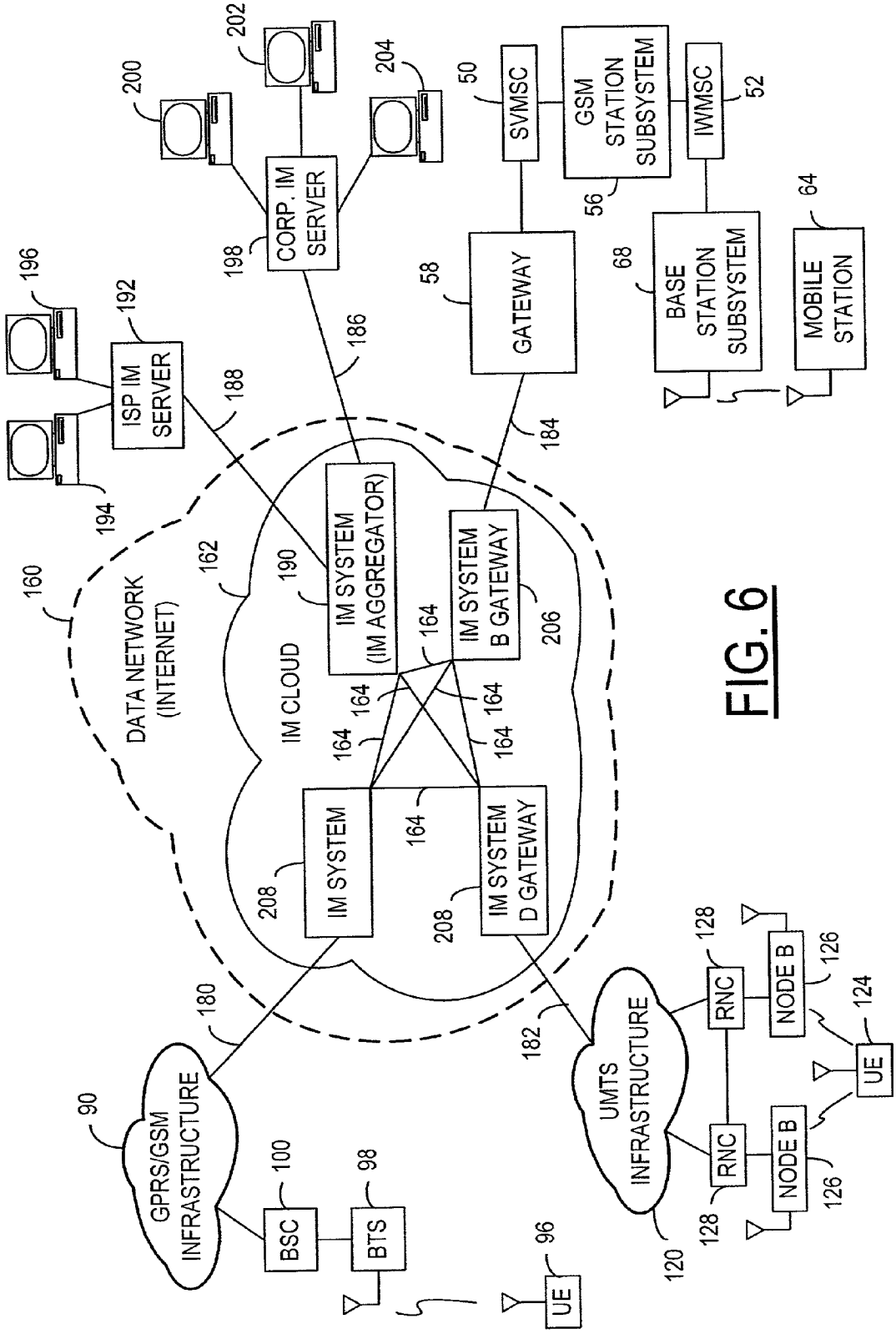
200
202
204
CORP. IM SERVER
198
186
196
192
ISP IM SERVER
188
194
160
DATA NETWORK (INTERNET)
162
IM CLOUD
190
IM SYSTEM (IM AGGREGATOR)
164
IM SYSTEM B GATEWAY
206
IM SYSTEM
208
IM SYSTEM D GATEWAY
180
182
90
GPRS/GSM INFRASTRUCTURE
BSC
100
BTS
98
UE
96
UMTS INFRASTRUCTURE
120
RNC
128
NODE B
126
UE
124
50
SVMSC
GSM STATION SUBSYSTEM
56
IWMSC
52
58
GATEWAY
184
68
BASE STATION SUBSYSTEM
64
MOBILE STATION

FIG. 6

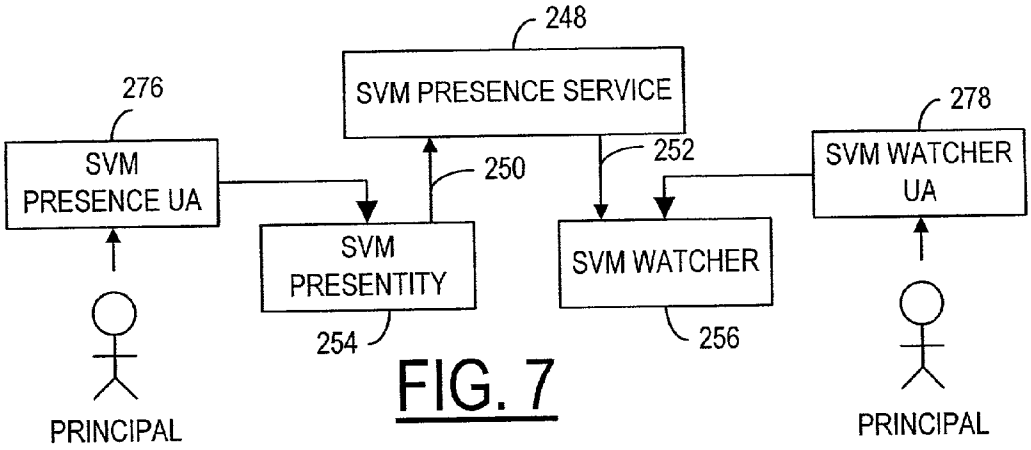


FIG. 7

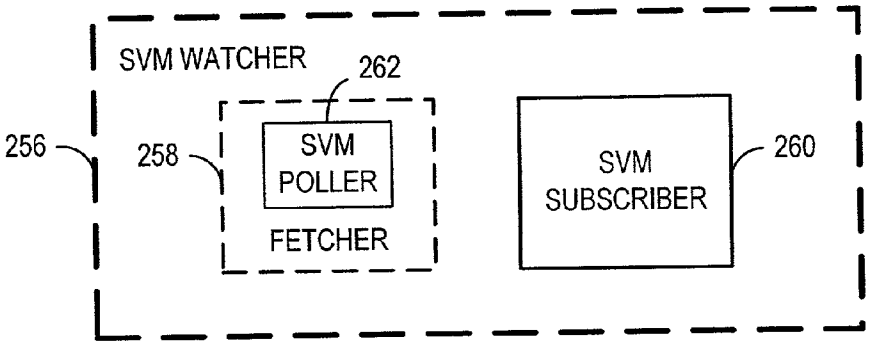


FIG. 8

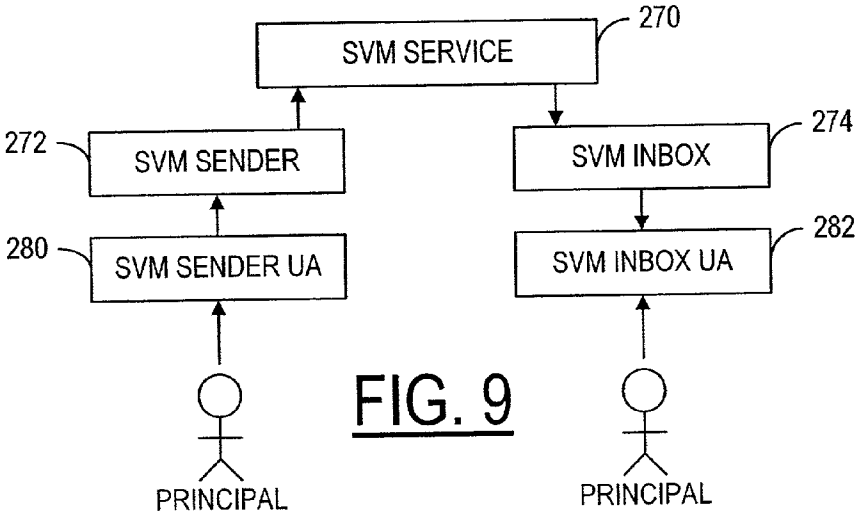


FIG. 9

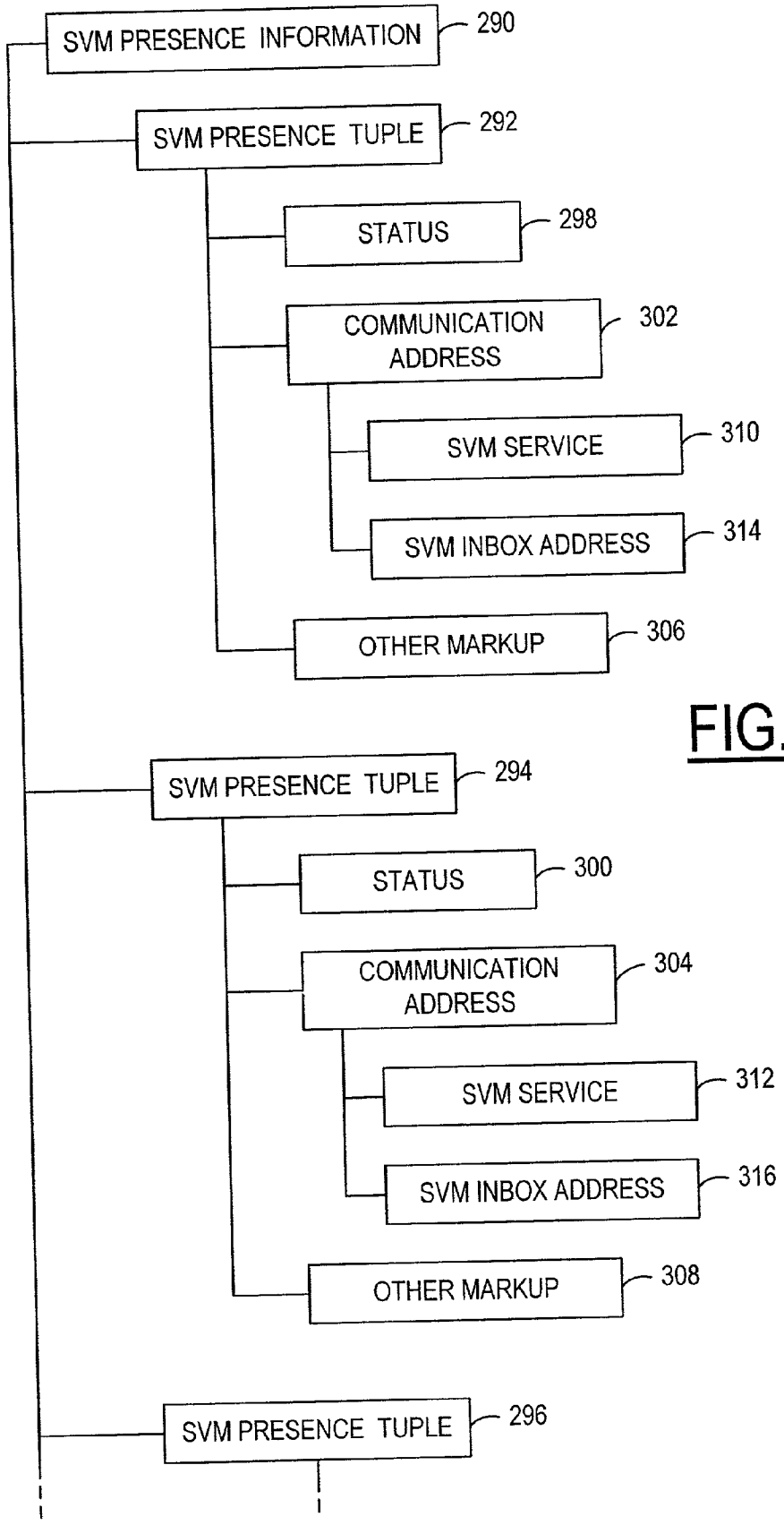
SVM PRESENCE INFORMATION
290
SVM PRESENCE TUPLE
292
STATUS
298
COMMUNICATION ADDRESS
302
SVM SERVICE
310
SVM INBOX ADDRESS
314
OTHER MARKUP
306
SVM PRESENCE TUPLE
294
STATUS
300
COMMUNICATION ADDRESS
304
SVM SERVICE
312
SVM INBOX ADDRESS
316
OTHER MARKUP
308
SVM PRESENCE TUPLE
296

FIG. 10

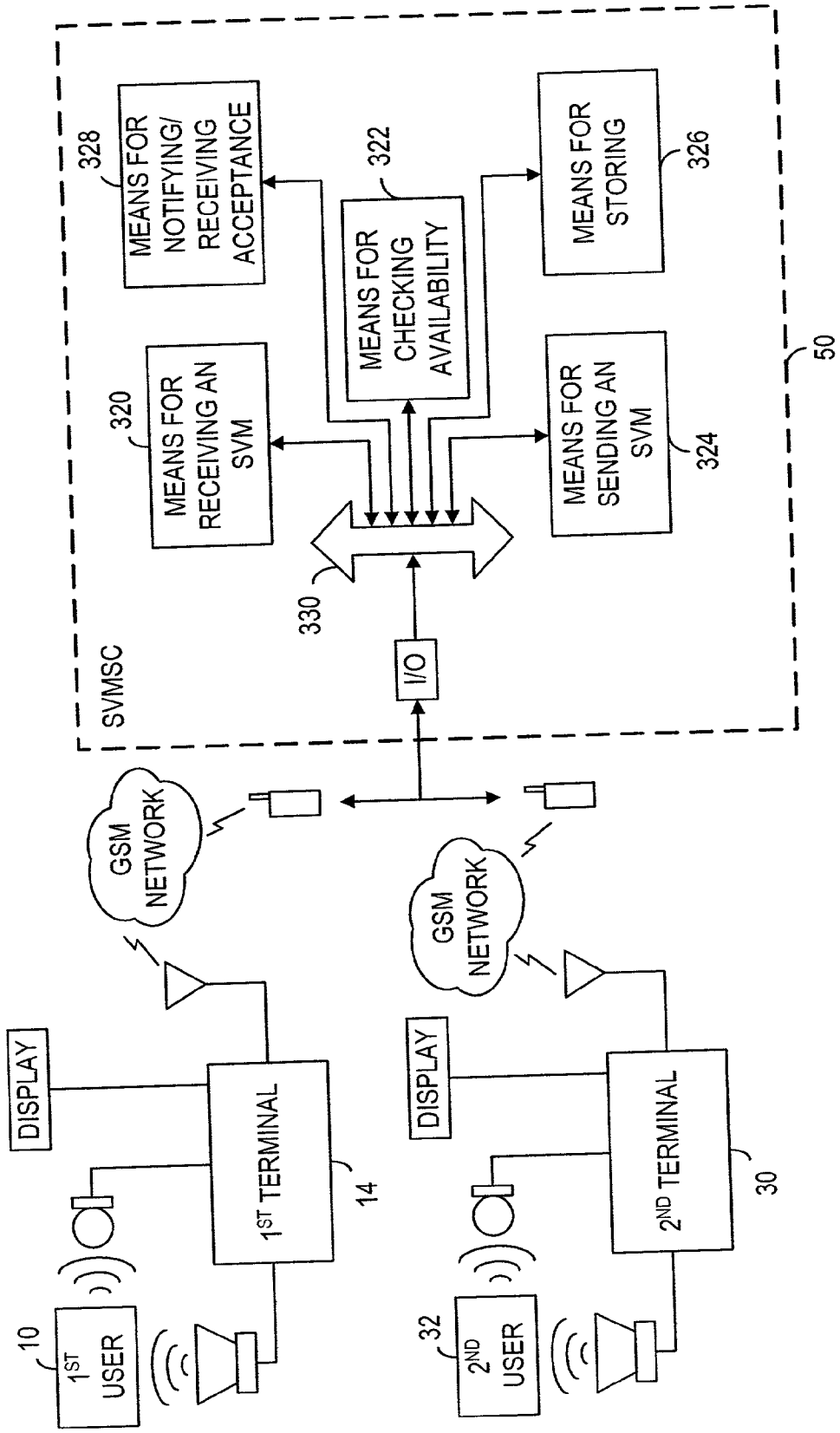
SVMSC
MEANS FOR NOTIFYING/ RECEIVING ACCEPTANCE
328
MEANS FOR CHECKING AVAILABILITY
322
MEANS FOR STORING
326
MEANS FOR RECEIVING AN SVM
320
MEANS FOR SENDING AN SVM
324
50
330
I/O
GSM NETWORK
GSM NETWORK
DISPLAY
1ST TERMINAL
14
DISPLAY
2ND TERMINAL
30
10
1ST USER
32
2ND USER

FIG. 11

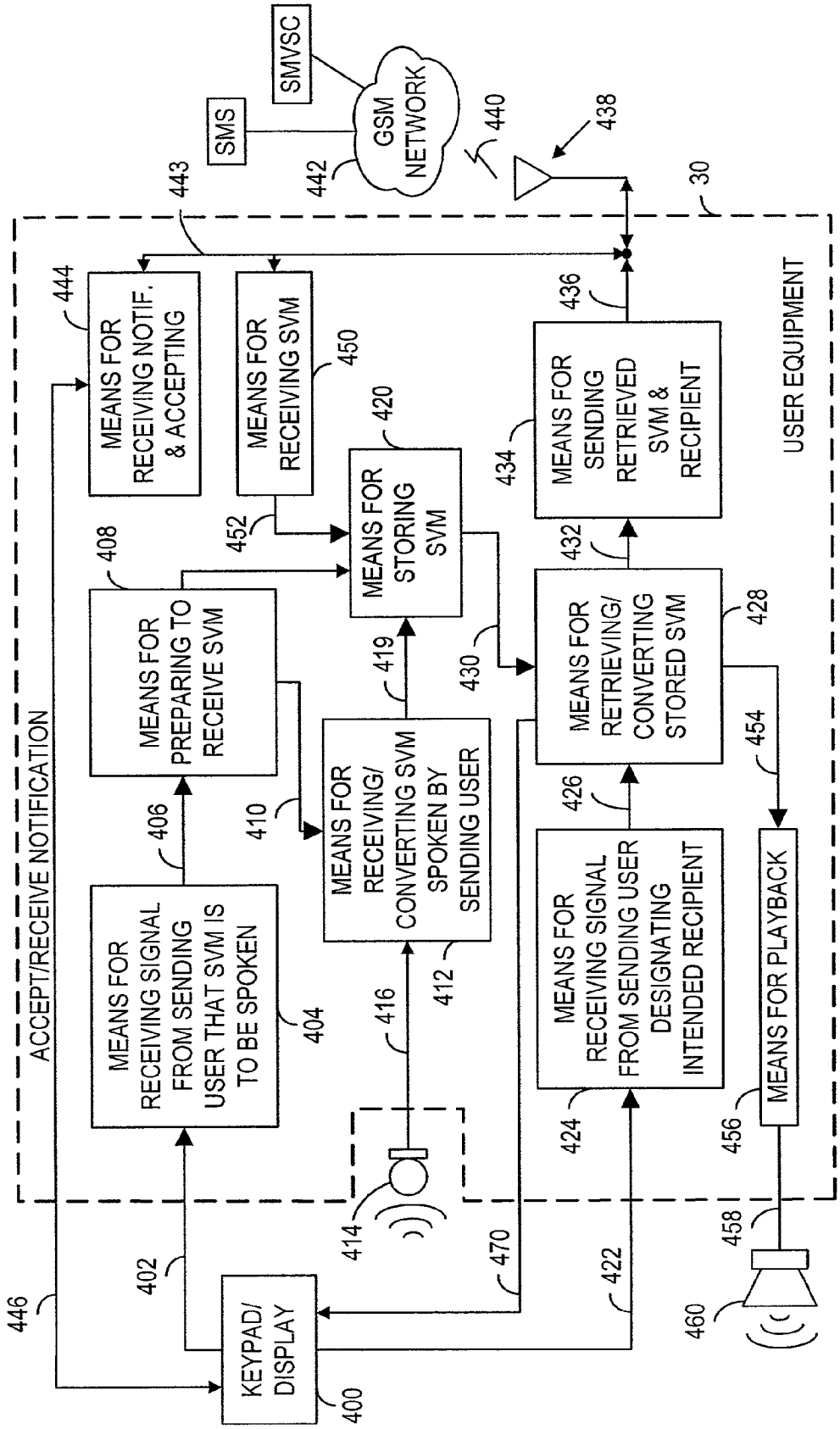
SMVSC
SMS
GSM NETWORK
442
440
438
30
443
ACCEPT/RECEIVE NOTIFICATION
USER EQUIPMENT
444
MEANS FOR RECEIVING NOTIF. & ACCEPTING
MEANS FOR RECEIVING SVM
450
420
MEANS FOR STORING SVM
452
436
MEANS FOR SENDING RETRIEVED SVM & RECIPIENT
434
408
MEANS FOR PREPARING TO RECEIVE SVM
419
430
432
MEANS FOR RETRIEVING/ CONVERTING STORED SVM
428
406
410
MEANS FOR RECEIVING/ CONVERTING SVM SPOKEN BY SENDING USER
412
416
404
MEANS FOR RECEIVING SIGNAL FROM SENDING USER THAT SVM IS TO BE SPOKEN
426
454
MEANS FOR RECEIVING SIGNAL FROM SENDING USER DESIGNATING INTENDED RECIPIENT
424
MEANS FOR PLAYBACK
456
414
470
422
458
460
402
446
KEYPAD/ DISPLAY
400

FIG. 12

# SHORT VOICE MESSAGE (SVM) SERVICE METHOD, APPARATUS AND SYSTEM

[0001] This application claims the benefit of U.S. Provisional Application No. 60/281,942 filed Apr. 5, 2001.

## BACKGROUND OF THE INVENTION

[0002] 1. Technical Field

[0003] The present invention relates to a new way to send messages and, more particularly, voice-type short messages.

[0004] 2. Discussion of Related Art

[0005] The short message service (SMS) has been realized point-to-point (PP) and for cell broadcast services (CBS) in the Global System for Mobile communications (GSM). See the ETSI GSM Technical Specification GSM 03.40 Version 5.3.0 July 1996 and GSM 07.05 Version 5.5.0 January 1998. For a short tutorial on SMS, see "The Global System for Mobile Communications Short Message Service" by G. Peersman and S. Cvetkovic, *IEEE Personal Communications*, June 2000. A problem with entering messages for transmittal via the SMS is that it often takes too long to create the message. The user has to use a keyboard wherein each key has the capability of entering one of several possible letters of the alphabet which are individually selected by multiple depressions. This can take a long time because it is possible to send more than a hundred characters even without concatenation. With concatenation, a message can be increased much longer to tens of thousands of characters. Such can become tiresome and impractical if extended too long even if using a full keyboard on a personal computer (PC) or personal digital assistant (PDA).

## DISCLOSURE OF INVENTION

[0006] An object of the present invention is to facilitate the sending of short messages.

[0007] According to a first aspect of the present invention, a method is provided for use in a telecommunications network for providing messages between users. The method comprises the steps of receiving a voice message from a first terminal spoken by a first user for a second user at a second terminal, checking availability of the second terminal, and immediately sending the received voice message to the second terminal if available. Similarly, according to a second aspect of the present invention, apparatus for use in such a telecommunications network comprises means for receiving a voice message from a first terminal spoken by a first user for a second user at a second terminal, means for checking availability of the second terminal, and means for immediately sending the received voice message to the second terminal, if available.

[0008] In accordance with both the first and second aspects of the present invention, the voice message can be stored until the second terminal is determined to be available. The second user can be notified at the second terminal of the received voice message from the first user prior to sending the voice message to the second terminal. In that case, the voice message is sent only after the second user signals acceptance.

[0009] In still further accord with the first and second aspects of the present invention, a communication session, i.e., a bidirectional communication can be established after receipt of a first message from the first terminal to the second terminal by receiving a voice message from the second terminal spoken by the second user and sending the received voice message to the first terminal. Such an interchange can be continued with numerous voice messages being exchanged between the first and second terminals. Before establishing the session, the availability of the first terminal can be established before sending the voice message from the second user to the first terminal.

[0010] Still further in accord with the first and second aspects of the present invention, the voice message received in either the first or second terminal may be stored therein for use by the receiving user at the convenience of the receiving user. Such could be stored on a SIM card, for instance.

[0011] According to a third aspect of the present invention, a voice message service center in a voice message system including a plurality of terminals comprises means for receiving a voice message from a first user terminal, means for storing the receive voice message from the first terminal, means for checking availability of an intended second user at a second terminal, and means for sending the stored received message from the first terminal to the second terminal if the second terminal is available.

[0012] In further accord with the third aspect of the present invention, the service center may further comprise means for notifying the second terminal of the voice message received from the first terminal wherein the received voice message from the first terminal is sent to the second terminal upon receiving an acceptance signal from the second terminal in response to the notification.

[0013] In still further accord with the third aspect of the present invention, one or more of the plurality of terminals comprises means for receiving the voice message at the first user terminal spoken by a first user for providing the voice message from the first user terminal to the means for receiving the voice message at the service center, means for storing voice messages including the voice message spoken by the first user, means for receiving a designation signal from the first user designating a second user as an intended recipient, means for retrieving the stored voice message in response to the designation signal for providing the voice message retrieved from storage and the designation signal, and means for sending the voice message retrieved from storage and the designation signal to the second user of the voice message system as an outgoing voice message. The one or more of the plurality of terminals may further comprise means for receiving an incoming voice message from the second user for storage in the means for storing SVMs and means for playback of the incoming voice message to the first user after retrieval from the means for storing voice messages by the means for retrieving stored voice messages. The one or more of the plurality of terminals may further comprise means for receiving notification of the incoming voice message from the second user for display or notification thereof to the first user, and means responsive to an acceptance indication input signal from the first user for sending the acceptance indication input signal for use in the voice message system in deciding whether to send the incoming voice message from the second user to the first user.

[0014] Still further in accord with the third aspect of the present invention, the means for receiving the voice message

spoken by the first user includes voice recognition means for recognizing the voice message spoken by the first user for providing the voice message as a text message for storage in and retrieval from the means for storing voice messages as a text message for transmission as an outgoing text voice message via a short message service center. The means for receiving an incoming voice message from the second user may include means for receiving an incoming text voice message for storage in the means for storing voice messages as a text message and wherein the means for playback of the incoming text voice message is for displaying the incoming text message on a display of the user equipment. On the other hand, the means for retrieving the stored voice message may also be for converting the retrieved voice message to a voice signal for playback on a means for playback as an enunciated voice message, such as an artificial voice.

[**0015**] According to a fourth aspect of the present invention, user equipment for use in a voice message system comprises means for receiving a short voice message spoken by a first user, means for storing SVMs including the SVM spoken by the first user, means for receiving a designation signal from the first user designating a second user as an intended recipient, means for retrieving the stored SVM in response to the designation signal for providing the SVM retrieved from storage and the designation signal, and means for sending the SVM retrieved from storage and the designation signal to the second user of the voice message system as an outgoing SVM.

[**0016**] In further accord with the fourth aspect of the present invention, the user equipment further comprises means for receiving an incoming SVM from the second user for storage and the means for storing SVMs, and means for playback of the incoming SVM to the first user after retrieval from the means for storing SVMs by the means for retrieving stored SVMs. Such user equipment may further comprise means for receiving notification of the incoming SVM from the second user for display or notification thereof by the user equipment, and means responsive to an acceptance indication input signal from the first user for sending the acceptance indication input signal for use in the voice message system in deciding whether to send the incoming SVM from the second user to the user equipment of the first user.

[**0017**] In still further accord with the fourth aspect of the present invention, the means for receiving the SVM spoken by the first user may include voice recognition means for recognizing the short voice message spoken by the first user for providing the SVM as a text message for storage in and retrieval from the means for storing SVMs as a text message for transmission as an outgoing text SVM via a short message service center. Similarly, the means for receiving an incoming SVM from the second user may include means for receiving an incoming text SVM for storage in the means for storing SVMs as a text message and wherein the means for playback of the incoming text SVM is for display on a display of the user equipment. Conversion software may also be provided for converting the incoming text SVM from the second user to voice for enunciation for instance as an artificial voice.

[**0018**] These and other objects, features and advantages of the present invention will become more apparent in light of the following detailed description of a best mode embodiment thereof, as illustrated in the accompanying drawing.

## BRIEF DESCRIPTION OF THE DRAWINGS

[**0019**] **FIG. 1** shows a short voice message (SVM) service method, according to the present invention.

[**0020**] **FIG. 2** is similar to **FIG. 1** in showing a SVM service method, according to the present invention.

[**0021**] **FIG. 3** shows the SVM service method of the present invention applied to GSM network subsystems.

[**0022**] **FIG. 4** shows the SVM service method of the present invention applied to a GPRS system.

[**0023**] **FIG. 5** shows the SVM service method of the present invention applied to a UMTS system.

[**0024**] **FIG. 6** shows the SVM service method of the present invention applied to an instant messaging infrastructure proposed by a third party operator of a proprietary instant messaging service.

[**0025**] **FIG. 7** shows the SVM service method of the present invention applied to a presence service as proposed to the IETF.

[**0026**] **FIG. 8** shows details of alternative watchers for the watcher of **FIG. 7**.

[**0027**] **FIG. 9** shows the SVM service method of the present invention applied to an instant messaging service proposed to the IETF.

[**0028**] **FIG. 10** shows the SVM service method of the present invention applied to create presence information according to a proposal to the IETF.

[**0029**] **FIG. 11** shows details of a SVM service center, according to the present invention as shown interfaced to a pair of terminals via one of many possible alternative networks.

[**0030**] **FIG. 12** shows details of a user equipment, according to the present invention, as shown interfaced to one of many possible networks.

## BEST MODE FOR CARRYING OUT THE INVENTION

[**0031**] As mentioned above, the present invention discloses a short voice message (SVM) service or voice message service (VMS) which is a completely new way to send short messages, i.e., as voice-type short messages. According to the present invention, short voice messages (SVMs) are sent as SMS messages, SMS-like messages, or as instant messages. The user or sending principal simply records a short voice message and sends it over the network for playback at the terminal of one or more intended recipients or receiving principals.

[**0032**] Referring to **FIG. 1, a** user **10** initiates a short voice message (SVM), e.g., by pressing a menu key on a user equipment **14** that is associated with the short voice message feature for a period of time, for instance, several seconds. As shown in a step **12** of **FIG. 2**, the user equipment **14** receives a signal on account of depression of the menu key by the user that a short voice message is to be spoken. As indicated in a step **16**, the user equipment **14** prepares to receive a short voice message and for instance emits a beep sound to tell the user that he may commence speaking as indicated in a step **18**. The user **10** then speaks into the user equipment

**14** as indicated in panel **1** at a baloon **20** in **FIG. 1**. The user equipment **14** then receives and stores the SVM during enunciation of the spoken message, as indicated in a step **22** of **FIG. 2**. The SVM may be concluded in any number of ways such as by the user **10** depressing a same or different menu key for a brief period of time, for instance, an instantaneous depression. Or, the user equipment could end the message recordation by signaling the user that the maximum message length has been reached.

[**0033**] The user **10** then uses the menu key to select one or more intended recipients as indicated both in a step **26** in **FIG. 2** and in a second panel labeled with a reference numeral **2** in **FIG. 1**. After selecting a recipient, the user may depress a menu key to initiate the transfer such as a key associated with the "OK" display of panel **2** of **FIG. 1**. It should be realized that the step **26** could instead be executed at a different stage of the process shown in **FIG. 2**. For instance, it could be executed before or after the step **12**.

[**0034**] The SVM is then sent to an SVM service center. This could be a short message service (SMS) service center which determines the availability of the one or more intended recipients. The service center may then send the SVM immediately to those intended recipients who are available and continue attempting to send to those not then available until they become available or until a time out occurs. On the other hand, instead of sending the SVM immediately upon determining availability, the service center may instead notify the available recipient or recipients that an SVM message has been received and which may identify the sender on a display of each available recipient's user equipment **30** as shown in panel **3** of **FIG. 1**. A transfer of the SVM message to the SVM service center is indicated in a step **28** as well as the sending of a notification, if applicable. The reception of the notification is indicated in a step **30**.

[**0035**] After that, if applicable the recipient **32** (as shown in panels **3** & **4** of **FIG. 1**) decides as indicated in a step **34** of **FIG. 2** to decline ("forget") or accept ("load") the SVM received from the sender and depresses a corresponding key or otherwise signals (e.g. voice) acceptance or not. Assuming the recipient **32** decides to accept the SVM, a step **36** is executed in which the short voice message service center provides delivery of the SVM to the recipient for playback as shown in the replicated baloon **20** in panel **4**. It will be realized as indicated above that instead of sending a notification as indicated in the step **30**, the SVM service could instead send the SVM directly to the intended recipient without giving the recipient any discretion as to whether to accept or not. This might be the case for instance in a conventional SMS or instant messaging (IM) context where the sender first determines whether the intended recipient is available by means of a presence service and the intended recipient has effectively acquiesced to availability by previously joining a "buddy list" or otherwise subscribing to the service. In that case, the voice message spoken by the initiating user is immediately sent to the user equipment of the intended recipient where it can be annunciated without further intervention or recorded on the recipient's SIM card for playback at the recipient's discretion.

[**0036**] It should be realized that the process shown in **FIGS. 1 and 2** can be reversed for messaging from user **32** to user **10** so that an interchange of communications between the two users may take place.

[**0037**] The short voice message service may be carried out in a GSM network as shown in **FIG. 3**. A short voice message (SVM) service center **50** is shown along with an interworking MSC **52** connected by a line **54** to a GSM Network Subsystem **56**. A gateway **58** is for interworking between the SVMSC **50** and a mobile switching center (MSC) **58** of another GSM network **59** including an MSC **60**, a BSC **62**, and a BTS **64**. The first-mentioned GSM Network Subsystem **56** also includes an MSC **66** is connected to a base station subsystem (BSS) **68** as well other base station subsystems **70** for communication with a plurality of mobile stations, the figure showing only one mobile station **72** for convenience. The BSS **68** includes one or more base transceiver stations (BTS) **74** as well as a base station controller **76** which is in turn connected to the MSC **66**. The MSC is also connected to a public switched telephone network (PSTN) and/or ISDN network **78** for allowing mobile stations to communicate with wired telephone sets in a circuit-switched manner. The MSC **66** is also connected to a plurality of databases including a VLR **80**, HLR **82**, EIR **84**, and AuC **86** which may be connected to the MSC directly or via a data network **80** and operation and maintenance center **82**. An interworking function (not shown) may be needed between the data network **80** and the MSC **58**.

[**0038**] The SVMSC **50** of **FIG. 3** may utilize the protocol layer for the existing SMS point-to-point service with the capability to transfer short messages e.g. of 140 octets of data in each packet data unit (PDU). According to an SMS feature that is particularly advantageous for purposes of the present invention, the SMS service provides the capability of concatenating messages of a length that can be increased to e.g. 38,760 or 16,830 depending on the character coding scheme used. These concatenated PDUs can be strung together to form a short voice message, according to the present invention, in any combination of from 1 to 255 PDUs of 140 octets each. In this way, short voice messages such as illustrated in **FIGS. 1 and 2** can be transmitted between a mobile station **72** in one GSM network subsystem **56** and another mobile station **90** associated with another GSM network subsystem **59**. The sequence of steps shown in **FIG. 2** from an initiating user **10** to a receiving user **32** can be reversed in direction so that the user **32** sends a reply to the user **10**. In the case shown in **FIG. 3**, this interchange would take place entirely between GSM network subsystems **56**, **59**.

[**0039**] In addition to carrying out the present invention on the GSM network subsystems **56**, **59** of **FIG. 3**, it should be realized that other approaches are possible, especially considering the development of GSM networks into a packet-based infrastructure via the General Packet Radio Service (GPRS) and subsequently the Universal Mobile Telecommunications System (UMTS). As shown in **FIG. 4, a** GPRS infrastructure **90** is capable of being connected to various data networks including for instance the Internet **92** or an x.25 network **94**. At the subscriber side, a user equipment (UE) **96** communicates via a radio link (Um) to a Base Transceiver Station **98** which is connected to a Base Station Controller **100** in turn connected to the GPRS infrastructure **90**. GPRS is a data service for GSM. It is a packet-switched mobile datacom service that is the next step in the evolution of GSM. It enables relatively high-speed mobile datacom usage and is very useful for "bursty" data applications such as mobile Internet browsing, email and push technologies

and it can be applied to the SVM service of the present invention. It has been demonstrated at speeds as fast as 150 kbps. The GPRS infrastructure includes a serving GPRS support node (SGSN) **102** connected to the BSC **100** as well as a gateway GPRS support node (GGSN) **104** that can be connected to the packet data networks **92**, **94**. The SGSN **102** and GGSM **104** may be interconnected by a GPRS backbone (IP based) **106**. The SGSN **102** may be connected to an HLR **108** similar to the HLR **74** of **FIG. 3**. It may also be connected to an SVM Service **110** similar to the SVM Service Center **50** of **FIG. 3**, according to the present invention for connection to a GSM Network Subsystem, to another GPRS infrastructure, or similar.

[**0040**] The present invention may also be implemented on a UMTS packet network architecture such as shown in **FIG. 5**. A universal mobile telecommunications system (UMTS) infrastructure **120** is shown in **FIG. 5** connected to a data network **122** such as the Internet. At the subscriber side, a user equipment **124** is connected by one or more radio links (Uu) to one or more corresponding Node Bs **126** which are in turn connected (Iub) to corresponding radio network controllers (RNCs) **128**. The RNCs **128** may be interconnected (Iur) as shown for purposes of improving the radio links and facilitating handover. The RNCs **128** are connected to the UMTS infrastructure **120** via Iu interfaces to a third generation-serving GPRS support node (3G-SGSN) **140**. This may be also connected to an HLR **142** similar to the HLR **108** of **FIG. 4** and the HLR **74** of **FIG. 3**. The 3G-SGSN **140** may be connected to a 3G-gateway GPRS support node (3G-GGSN) **142** by means of a IP-based UMTS backbone **144**. It may also be connected to an SVM service **146** similar to the SVM service center **50** of **FIG. 3**, according to the present invention for connection to a GSM Network Subsystem, to another UMTS infrastructure, to a GPRS infrastructure, or similar. The present invention may also be implemented using the networks of **FIGS. 4 and 5** as shown in an open architecture example in **FIG. 6**.

[**0041**] **FIG. 6** shows a data network **160** such as the data network **80** of **FIG. 3**, the data network **92** of **FIG. 4**, or the data network **122** of **FIG. 5**. Within the data network is an instant messaging (IM) cloud **162** which contains an instant messaging architecture such as proposed in Internet Draft "draft-aol-imx-00.txt" by E. Aoki and A. Wick dated Jun. 15, 2000 and entitled "The IMX Architecture Interoperability with America On Line's Instant Messaging Services". This open IM architecture is illustrated and discussed for instance in the publication IEEE *Internet Computing* in an unattributed article entitled "AOL's Instant Messaging Proposal Elicits Kudos and Brickbats" dated July-August 2000. This proposal by AOL includes three main ways to participate in the proposed public IM cloud. IM System Hosts may be public, may be aggregators, or may be privately-owned gateways. A plurality of IM systems are shown within the IM cloud **162** of **FIG. 6** and communicate with each other according to the above-mentioned proposal using an open IMX protocol. The communications between hosts in the IM cloud is via on-demand, persistent TCP connections using the open IMX protocol. This is signified by open IMX protocol lines **164** interconnecting the IM systems. The systems within the IM cloud communicate outside the cloud with proprietary or vendor-specific client protocols **180**, **182**, **184**, **186**, **188**. These are server-to-server protocols and are not the same as the open IMX protocol interconnecting the IM systems within the IM cloud. These vendor-specific client protocols may be different from each other and may be used to connect various entities to the IM cloud via the data network **160**. It should be mentioned that although the IM cloud **162** is shown within the data network **160**, it could be a separate entity connected to the various clients directly or via the data network **160**. As many IM systems as want to can be part of the IM cloud **162**, according to the above-mentioned AOL proposal. Further to the proposal, companies, IM services, or ISPs can run their own IM system by either being right in the cloud or connecting to the cloud through an IM aggregator **190**. For instance, an ISP IM server **192** is connected by the line **188** to the IM system aggregator **190**. This ISP **192** can provide instant message services to IM clients **194**, **196** which can be independent of each other. Similarly, a corporate IM server **198** can be connected to the aggregator **190** by the line **186** for providing IM services to its own clients **200**, **202**, **204**, within and without the enterprise.

[**0042**] According to the present invention, in addition to the above-mentioned ISP **192** and corporate IM server **198**, for example, short voice messages can be provided from, to, or between the clients **194**, **196**, **200**, **202**, **204** via the data network **160** which may include the IM cloud **162**. Furthermore, in addition to the IM system aggregator, other IM systems **206**, **208**, **210** can be provided for the purpose of interconnecting various wireless user equipments **96**, **124** and other mobile stations such as the mobile station **72** to the IM cloud **162** for purposes of interchanging short voice messages between wireless systems or between various systems including SVM exchanges between wireless and land based systems.

[**0043**] In the alternative, it has been proposed in IETF RFC 2778 dated February 2000 (before the AOL proposal) to provide a presence and instant messaging system according to "a model for presence and instant messaging" by M. Day (Lotus), J. Rosenberg (Dynamiesoft) and H. Sugano (Fujitsu). An exemplary instant message service is shown for instance in **FIG. 7** according to the above-mentioned model for presence adapted to SVM, according to the present invention. An SVM presence service **248** serves to accept SVM presence information e.g. on a line **250**, store it, and distribute it, e.g., on a line **252**. An SVM presentity **254** is a client that provides the presence information on the line **250** to be stored and distributed. Another set of clients called SVM watchers such as an SVM watcher **256** in **FIG. 7**, receives SVM presence information on the line **252** from the SVM presence service **248**.

[**0044**] As shown in **FIG. 8**, according to an adaptation of RFC 2778, there are two kinds of SVM watchers, called SVM fetchers **258** and SVM subscribers **260**. An SVM fetcher **258** simply requests the current value of some SVM presentity's presence information from the presence service **248**. In contrast, an SVM subscriber **260** requests notification from the SVM presence service **248** of (future) changes in some SVM presentity's presence information. A special kind of SVM fetcher is one that fetches SVM presence information on a regular basis. This is called an SVM poller **262**.

[**0045**] The SVM presence service **248** of **FIG. 7** also has SVM watcher information about SVM watchers and their activities in terms of fetching or subscribing to SVM presence information. The SVM presence service may also

distribute SVM watcher information to some SVM watchers, using the same mechanisms that are available for distributing SVM presence information. Changes to SVM presence information are distributed to SVM subscribers via notifications.

[0046] Associated with the SVM presence service **248** of **FIGS. 7 and 8**, is an SVM service such as shown in **FIG. 9**. The above mentioned RFC 2778 models an instant messaging service responsive to messages from a sender for providing messages to an instant inbox. In **FIG. 9**, there is shown a short voice message service **270** responsive to messages from an SVM sender **272** for providing short voice messages to an SVM inbox **274**. Thus it will be realized that the SVM service of the present invention can be carried out on the model for presence and instant messaging described in RFC 2778 as well as according to an open IM architecture such as proposal as shown in **FIG. 6**. If carried out on the model of RFC 2778, then the SVM users will fulfill roles such as fulfilled by the "principals" of RFC 2778 wherein the term "principal" refers to people, groups and/or software in the "real world" outside of the system that use the system as a means of coordination and communication. The users **10**, **32** of FIG. I would fall within this definition. It is stated in RFC **2778** that it is entirely outside the model presented there as to how the real world maps on to "principals" i.e., the system of model entities knows only that two distinct principals are distinct, and two identical principals are identical. A principal interacts with the system via one of several user agents (UAs) such as shown in **FIGS. 7 and 9**. These user agents may for instance be carried out as defined in internet draft "ietf-sip-rfc 25436is-02.ps" entitled "SIP: Session Initiation Protocol" by Handley et al, dated Nov. 24, 2000. According to the present invention therefore, the presence service of **FIG. 7** is adapted to keep track of "presence" of SVM service users and principals interact with such an adapted system via an SVM presence UA **276** and an SVM watcher UA **278**. Similarly, as shown in **FIG. 9**, principal users of the SVM service **270** interact therewith using a SVM sender UA **280** and an SVM inbox UA **282**. It should be mentioned, as is mentioned in RFC 2778, that the different kinds of user agents are split apart in the model even though most implementations will combine at least some of them. A user agent is purely coupling between a principal and some core entity of the system (SVM inbox **274**, SVM sender **272**, SVM presentity **254**, SVM watcher **256**). It will therefore be understood that the simple examples shown in RFC 2778 are applicable to the SVM service of the present invention.

[0047] Referring now to **FIG. 10**, the SVM service of the present invention is shown as part of the SVM presence information **290** of the presence service **248** of **FIG. 7**. The presence information comprises an arbitrary number of elements, called presence tuples **292**, **294**, **296** . . . ,n. Each such element comprises a status marker **298**, **300** (which might convey information such as on-line/off-line/busy/away/do not disturb), an optional communication address **302**, **304**, and optional other presence markups **306**, **308**. A communication address **302**, **304** includes a communication means which, according to the present invention, is an SVM service **310**, **312**. It also includes an SVM inbox address **314**, **316**, according to the present invention. Status **298**, **300** is further defined, as guided by the model to have at least two states that interact with instant message delivery—open, in which short voice messages will be accepted, and closed, in which short voice messages will not be accepted. Status can be interpretable by programs or by persons and can consist of single or multiple values as spelled out in the IETF model of RFC 2778.

[0048] Referring back to **FIG. 9**, it will be realized that the SVM presence service of **FIG. 7** and **FIG. 10** has an effect on the short voice messaging service in that since the SVM in-box **274** is a receptacle for short voice messages, its SVM inbox address **314** can be included in the presence tuple **292**, **294** to define how a short voice message should be delivered to that short voice message inbox. As noted above, certain values of the status marker **298**, **300** indicate whether short voice messages will be accepted at the SVM inbox **274**. Therefore, the combination of the SVM presence service of **FIG. 7** and the SVM service of **FIG. 9** constitute an IM system similar to that shown in **FIG. 6** except being a more "open" architecture than that shown in **FIG. 6**.

[0049] A problem with prior art SMS systems is that they are proprietary systems wherein each SMS center is different, depending on the vendor. To avoid such a problem with the inventive SVM services, the open RFC 2778 approach or similar is recommended. Other approaches which make for a more transparent applicability of the inventive SVM service would include a platform that integrates IP networks with the short voice message service in both mobile and fixed networks. For the mobile case, such an integrated platform would be similar to that shown in the article "iSMS: An Integration Platform for Short Message Service and IP Networks" by H. Chung-Hwa Rao et al, *IEEE Network,* March/April 2001, pages 48-55. In that article, instead of having a proprietary SMSC and gateway interconnecting a mobile network with an IP network, a so-called iSMS gateway is proposed having a mobile telephone connected with a proprietary GSM network communicating with a short message driver using an AT-command set which in turn communicates using a TCP API with an iSMS server connected to an IP network using TCP. This would also allow GSM networks of different operators to interwork with each other in a fairly painless manner. See for instance **FIG. 5** of the above mentioned article by H. Chung-Hwa Rao which could easily be adapted to the SVM service center of the present invention, as will be apparent to anyone of skill in the art. This approach could also be used between the IM System B Gateway **206** and SVMSC **50** of **FIG. 6**, thereby avoiding any need for the gateway **58**.

[0050] Referring now to **FIG. 11, a** generalized SVMSC **50** is shown interfacing with the first terminal **14** and the second terminal **30**. The first terminal is for use by the first user **10** and the second terminal **30** by the second user. Each terminal has a display, microphone, speaker and antenna associated therewith, although the wireless connection between the terminals and the SVMSC may be replaced by a wired connection for one or both terminals as shown in **FIG. 6**. The SVMSC of **FIG. 11** includes means **320** for receiving an SVM from the first terminal spoken by the first user intended by the first user for delivery to the second user at the second terminal. The SVMSC is able to check the availability of the second terminal by means **322** for checking such availability. Such may reside in whole or in part in one or both of the illustrated GSM networks. If the second terminal is available, the SVMSC immediately sends the received voice message to the second terminal by means **324**.

[0051] The voice message may be stored temporarily in a means **326** for storing short voice messages in the SVMC until it is determined that the second terminal is available. In some implementations, it may be desired to notify the second terminal of recipient of an SVM before actually sending it. In that case, a means **328** for notifying is provided in the SVMC which is able to send a notification to the second user at the second terminal of the existence of a received voice message from the first user intended for the second user. If the second user signals acceptance, the SVMSC causes the received SVM to immediately be sent to the second terminal. In other words, it is retrieved from the means **326** for temporarily storing the SVM (or from another storage location outside the SVMSC) and immediately delivered to the second terminal.

[0052] Once the second user has received the SVM from the first user, the second user may simply do nothing or may instead reply. In that case, the second user initiates an SVM in the same manner as shown in **FIG. 1** except in the reverse direction. The SVMSC then receives a short voice message from the second terminal spoken by the second user and immediately sends the received voice message to the first terminal. In some cases, if a significant lag of time has elapsed between the sending of the message from the first terminal to the second terminal and the initiation of a reply from the second terminal or for some other reason, it may be advisable to check the availability of the first terminal before carrying out the step of immediately sending the received voice message from the second terminal to the first terminal. This can be under the control of a timing algorithm.

[0053] It should also be mentioned that the short voice messages exchanged between the first and second terminals may also be stored within the terminals themselves after transmission from the SVMSC. For instance, such short messages may be stored on the SIM card within each terminal or, in the case of a hard-wired terminal, on some other storage medium such as a hard drive, EEPROM, or random access memory.

[0054] The various blocks shown in the SVMSC **50** of **FIG. 1** are shown interconnected by a common bus **330** which is in turn connected to an input/output (I/O) port which is itself connected to a pair of mobile phones by an antenna or some other connection. These mobile phones are in communication with antennas of the first and second terminals via corresponding GSM networks serving the respective first and second users. It should be realized that the various blocks illustrated within the SVMSC may be carried out functionally on one or more integrated circuits or as part of software executed by a general purpose signal processor. In that case, the bus **330** constitutes a data, address and control bus interconnected to various components such as a central processing unit (CPU), clock, random access memory (RAM), read only memory (ROM), etc. Also in that case, the ROM stores code which is used by the CPU to execute the functional blocks shown in **FIG. 11**. For the case shown, in which the first and second terminals **14**, **30** are subscribers to service providers from different companies, the SVMSC can ideally be carried out according to the iSMS gateway approach described above in order to ameliorate interworking complexities that would be caused by the SVMSC having proprietary interfaces. Therefore, the SVMSC of **FIG. 11** is shown communicating with two separate GSM networks using the above-mentioned iSMS methodology but adapted to the SVM service center model of the present invention. In such a case, the SVMSC can be implemented on a laptop.

[0055] **FIG. 12** shows details of a user equipment such as the user equipment **14** or the user equipment **30** of **FIG. 1**. Such may include an input/output device **400** including but not limited to a keypad and display. The keypad may be used to receive an input from the sending user that an SVM is to be spoken. This may be signaled by the sending user pressing a key of the keypad which causes a signal on a line **402** to be provided to a means **404** for receiving and registering the signal on the line **402** from the sending user that an SVM is to be spoken. This causes a signal on the line **406** to be provided to a means **408** for preparing to receive the SVM. This means **408** in turn provides a signal on a line **410** to a means **412** for receiving the SVM spoken by the sending user into a microphone **414** which provides a signal on a line **416** to the means **412** that converts the signal on the line **416** to a coded signal indicative of speech for being decoded at the receiving end for playback as speech. This coded signal may be provided on a line **419** to a means **420** for storing the SVM temporarily. Once the SVM message is completed, the user may select the recipient as indicated at panel **2** in **FIG. 1** by means of the keypad **400** which provides a selection signal on a line **422** to a means **424** for receiving such a signal from the sending user designating the intended recipient which is encoded and provided on a signal line **426** to means **428** for retrieving the SVM stored in the storage means **420** It should be realized that the various blocks illustrated within the SVMSC may be carried out functionally on one or more integrated circuits or as part of software executed by a general purpose signal processor. In that case, the bus **330** constitutes a data, address and control bus interconnected to various components such as a central processing unit (CPU), clock, random access memory (RAM), read only memory (ROM), etc. Also in that case, the ROM stores code which is used by the CPU to execute the functional blocks shown in **FIG. 11**. For the case shown, in which the first and second terminals **14**, **30** are subscribers to service providers from different companies, the SVMSC can ideally be carried out according to the iSMS gateway approach described above in order to ameliorate interworking complexities that would be caused by the SVMSC having proprietary interfaces. Therefore, the SVMSC of **FIG. 11** is shown communicating with two separate GSM networks using the above-mentioned iSMS methodology but adapted to the SVM service center model of the present invention. In such a case, the SVMSC can be implemented on a laptop.

[0056] **FIG. 12** shows details of a user equipment such as the user equipment **14** or the user equipment **30** of **FIG. 1**. Such may include an input/output device **400** including but not limited to a keypad and display. The keypad may be used to receive an input from the sending user that an SVM is to be spoken. This may be signaled by the sending user pressing a key of the keypad which causes a signal on a line **402** to be provided to a means **404** for receiving and registering the signal on the line **402** from the sending user that an SVM is to be spoken. This causes a signal on the line **406** to be provided to a means **408** for preparing to receive the SVM. This means **408** in turn provides a signal on a line **410** to a means **412** for receiving the SVM spoken by the sending user into a microphone **414** which provides a signal on a line **416** to the means **412** that converts the signal on the

line **416** to a coded signal indicative of speech for being decoded at the receiving end for playback as speech. This coded signal may be provided on a line **419** to a means **420** for storing the SVM temporarily. Once the SVM message is completed, the user may select the recipient as indicated at panel **2** in **FIG. 1** by means of the keypad **400** which provides a selection signal on a line **422** to a means **424** for receiving such a signal from the sending user designating the intended recipient which is encoded and provided on a signal line **426** to means **428** for retrieving the SVM stored in the storage means **420** as conveyed on a line **430**. The stored SVM along with the encoded information designating the intended recipient is provided on a signal line **432** to a means **434** for sending the retrieved SVM on a line **436** to an antenna **438** for transmission on a wireless link **440** to a GSM network **442**. From there, it may be sent to an SVMSC similar to the SVMSC of **FIG. 11**.

[**0057**] Similarly, in the reverse direction, another user equipment provides an SVM message to an SVMSC (which may be the same SVMSC) and provides same to the GSM network **442** which in turn provides a notification on the wireless link **440** to the antenna **438** for transfer on a line **443** to a means **444** for receiving such notifications. This notification signal is provided on a line **446** to the display **400** in a manner similar to that shown in panel **3** of **FIG. 1**. The receiving user can then depress a key to "load" or "forget" the incoming SVM message. Assuming the receiving user depresses the keypad on a key corresponding to "load" and thereby signals acceptance, a signal is provided on the line **446** to the means **444** for accepting the notified SVM message. The acceptance is signaled on the line **443** to the antenna **438** for transmission to the SVMSC via the wireless link **440** and the GSM network **442**. The SVMSC then provides the SVM to the GSM network **442** which in turn provides it over the wireless link **440** to the antenna **438** for transfer to a means **450** for receiving the SVM. The receiving means **450** then provides the received SVM on a line **452** to the means **420** for storing the received SVM. It may then be retrieved by the means **428** and provided on a line **454** for playback on a means **456** which is connected by a signal line **458** to a speaker **460** for announcing the SVM to the receiving user. As with the SVMSC of **FIG. 11**, the user equipment of **FIG. 12** may be carried out in various combinations of software and hardware including a general purpose or special purpose signal processor. As known in the art, these functionalities can be embodied in various combinations of software and hardware which functionalities are freely transferable between various degrees of software and hardware implementations.

[**0058**] In cases where it is undesirable to send short voice messages in the form of speech, the problem of entering numerous letters of the alphabet for assembling short messages can be overcome by converting the spoken SVM to text in the user terminal by means of voice recognition software and sending the converted text to the recipient by means of the traditional SMS infrastructure for display as text at the intended recipient's terminal or for playback as text converted to voice such as an artificial voice. In that case, referring to **FIG. 12**, the means **412** for receiving the spoken SVM can include voice recognition software and means for converting the recognized voice characteristics to text for provision on the line **419** as characters such as traditionally used in SMS and which takes up much less storage capacity of the means **420** for storing such messages. In that case, the means **428** retrieves the stored message and sends it over the line **432** to the sending means **434** and on to the recipient via the antenna **438**, wireless link **440**, GSM network **442**, and a traditional SMS network such as shown which is in turn connected to the GSM network of the intended recipient. Upon receipt, the recipient's terminal may display the incoming SMS message as text in the traditional manner of SMS or may include hardware/software for playback as text converted to voice such as an artificial voice. In that case, the recipient's user equipment would have to include in the means for receiving **428** a converting means for converting the textual message to a voice signal on the line **454** for playback and annunciation on the speaker **460**. However, if only text, then it can be displayed on the display **400** without such conversion.

[**0059**] Although the invention has been shown and described with respect to a best mode embodiment thereof, it should be understood by those skilled in the art that the foregoing and various other changes, omissions and additions in the form and detail thereof may be made therein without departing from the spirit and scope of the invention.

**1**. Method for use in a telecommunications network for providing messages between users, comprising the steps of:

receiving a voice message from a first terminal spoken by a first user for a second user at a second terminal,

checking availability of said second terminal, and

immediately sending the received voice message to the second terminal if available.

**2**. The method of claim 1, further comprising the step of storing the voice message until the step of checking availability determines the second terminal is available.

**3**. The method of claim 1, further comprising the step of notifying the second user at the second terminal of the received voice message from the first user prior to said step of immediately sending.

**4**. The method of claim 3, wherein said step of immediately sending the received voice message to the second terminal is carried out only after the second user signals acceptance.

**5**. The method of claim 1, further comprising the steps of:

receiving a voice message from the second terminal spoken by the second user, and

immediately sending the received voice message to the first terminal.

**6**. The method of claim 5, further comprising the step of checking the availability of said first terminal before carrying out said step of immediately sending the received voice message to the first terminal.

**7**. The method of claim 1, further comprising the step of storing the received voice message in the second terminal for playback by the second user at the convenience of the second user.

**8**. Apparatus for use in a telecommunications network for providing messages between users, comprising:

means for receiving a voice message from a first terminal spoken by a first user for a second user at a second terminal;

means for checking availability of said second terminal; and

means for immediately sending the received voice message to the second terminal if available.

**9**. The apparatus of claim 8, further comprising means for storing the voice message until the means for checking availability determines the second terminal is available.

**10**. The apparatus of claim 8, further comprising means for notifying the second user at the second terminal of the received voice message from the first user prior to the received voice message transmission to the second terminal.

**11**. The apparatus of claim 10, wherein the received voice message is sent to the second terminal only after the second user signals acceptance.

**12**. The apparatus of claim 8, further comprising:

means for receiving a voice message from the second terminal spoken by the second user in reply to the voice message from the first user; and

means for immediately sending the voice message received from the second user to the first terminal.

**13**. The apparatus of claim 12, further comprising means for checking the availability of the first terminal before immediately sending the voice message received from the second terminal to the first terminal.

**14**. The apparatus of claim 8, further comprising means for storing the voice message received in the second terminal for playback to the second user at the convenience of the second user.

**15**. A voice message system including a plurality of terminals and a voice message service center, said service center comprising:

means for receiving a voice message from a first user terminal;

means for storing the received voice message from the first terminal;

means for checking availability of an intended second user at a second terminal;

means for sending the stored received message from the first terminal to the second terminal if the second terminal is available.

**16**. The system of claim 15, said service center further comprising means for notifying the second terminal of the voice message received from the first terminal wherein the received voice message from the first terminal is sent to the second terminal upon receiving an acceptance signal from the second terminal in response to the notification.

**17**. The system of claim 15, wherein one or more of said plurality of terminals comprises:

means for receiving said voice message at said first user terminal spoken by a first user for providing said voice message from said first user terminal to said means for receiving said voice message at said service center;

means for storing voice messages including said voice message spoken by said first user;

means for receiving a designation signal from said first user designating a second user as an intended recipient;

means for retrieving the stored voice message in response to the designation signal for providing the voice message retrieved from storage and the designation signal; and

means for sending the voice message retrieved from storage and the designation signal to the second user of the voice message system as an outgoing voice message.

**18**. The voice message system of claim 17, wherein said one or more of said plurality of terminals further comprises:

means for receiving an incoming voice message from the second user for storage in the means for storing SVMs; and

means for playback of the incoming voice message to the first user after retrieval from the means for storing voice messages by the means for retrieving stored voice messages.

**19**. The voice message system of claim 18, wherein said one or more of said plurality of terminals further comprises:

means for receiving notification of the incoming voice message from the second user for display or notification thereof to the first user; and

means responsive to an acceptance indication input signal from the first user for sending the acceptance indication input signal for use in the voice message system in deciding whether to send the incoming voice message from the second user to the first user.

**20**. The voice message system of claim 17, wherein the means for receiving the voice message spoken by the first user includes voice recognition means for recognizing the voice message spoken by the first user for providing the voice message as a text message for storage in and retrieval from the means for storing voice messages as a text message for transmission as an outgoing text voice message via a short message service center.

**21**. The voice message system of claim 20, wherein the means for receiving an incoming voice message from the second user may include means for receiving an incoming text voice message for storage in the means for storing voice messages as a text message and wherein the means for playback of the incoming text voice message is for displaying the incoming text message on a display of the user equipment.

**22**. The user equipment of claim 20, wherein the means for receiving an incoming voice message from the second user is means for receiving an incoming text voice message for storage in the means for storing voice messages as a text message and wherein the means for retrieving the stored voice message is also for converting the retrieved voice message to a voice signal for playback on a means for playback as an enunciated voice message.

**23**. User equipment for use in a voice message system, comprising:

means for receiving a short voice message (SVM) spoken by a first user;

means for storing SVMs including said SVM spoken by said first user;

means for receiving a designation signal from the first user designating a second user as an intended recipient;

means for retrieving the stored SVM in response to the designation signal for providing the SVM retrieved from storage and the designation signal; and

means for sending the SVM retrieved from storage and the designation signal to the second user of the voice message system as an outgoing SVM.

**24**. The user equipment of claim 23, further comprising:

means for receiving an incoming SVM from the second user for storage in the means for storing SVMs; and

means for playback of the incoming SVM to the first user after retrieval from the means for storing SVMs by the means for retrieving stored SVMs.

**25**. The user equipment of claim 24, further comprising:

means for receiving notification of the incoming SVM from the second user for display or notification thereof by the user equipment; and

means responsive to an acceptance indication input signal from the first user for sending the acceptance indication input signal for use in the voice message system in deciding whether to send the incoming SVM from the second user to the user equipment of the first user.

**26**. The user equipment of claim 23, wherein the means for receiving the SVM spoken by the first user is voice recognition means for providing the SVM as a text message for storage in and retrieval from said means for storing SVMs as a text message for transmission as an outgoing text SVM via a short message service (SMS) center.

**27**. The user equipment of claim 26, wherein the means for receiving an incoming SVM from the second user is means for receiving an incoming text SVM for storage in the means for storing SVMs as a text message and wherein the means for playback of the incoming text SVM is for displaying the incoming text message on a display of the user equipment.

* * * * *