MOLECULAR AND CELLULAR BIOLOGY, Oct. 1984, p. 2072–2081
0270-7306/84/102072-10$02.00/0
Copyright © 1984, American Society for Microbiology
Vol. 4, No. 10

A Human Parvovirus, Adeno-Associated Virus, as a Eucaryotic Vector: Transient Expression and Encapsidation of the Procaryotic Gene for Chloramphenicol Acetyltransferase

JON-DURI TRATSCHIN, MICHAEL H. P. WEST, TRACEY SANDBANK, AND BARRIE J. CARTER*

Laboratory of Cell Biology and Genetics, National Institute of Arthritis, Diabetes, and Digestive and Kidney Diseases, Bethesda, Maryland 20205

Received 3 April 1984/Accepted 2 July 1984

We have used the defective human parvovirus adeno-associated virus (AAV) as a novel eucaryotic vector (parvector) for the expression of a foreign gene in human cells. The recombinant, pAV2, contains the AAV genome in a pBR322-derived bacterial plasmid. When pAV2 is transfected into human cells together with helper adenovirus particles, the AAV genome is rescued from the recombinant plasmid and replicated to produce infectious AAV particles at high efficiency. To create a vector, we inserted a procaryotic sequence coding for chloramphenicol acetyltransferase (CAT) into derivatives of pAV2 following either of the AAV promoters p_{40} (pAVHiCAT) and p_{19} (pAVBcCAT). When transfected into human 293 cells or HeLa cells, pAVHiCAT expressed CAT activity in the absence of adenovirus. In the presence of adenovirus, this vector produced increased amounts of CAT activity and the recombinant AAV-CAT genome was replicated. In 293 cells, pAVBcCAT expressed a similar amount of CAT activity in the absence or presence of adenovirus and the recombinant AAV-CAT genome was not replicated. In HeLa cells, pAVBcCAT expressed low levels of CAT activity, but this level was elevated by coinfection with adenovirus particles or by cotransfection with a plasmid which expressed the adenovirus early region 1A (E1A) product. The E1A product is a transcriptional activator and is expressed in 293 cells. Thus, expression from two AAV promoters is differentially regulated: expression from p_{19} is increased by E1A, whereas p_{40} yields high levels of constitutive expression in the absence of E1A. Both AAV vectors were packaged into AAV particles by complementation with wild-type AAV and yielded CAT activity when subsequently infected into cells in the presence of adenovirus.

Analysis of gene expression in mammalian cells has been greatly facilitated by the development of procedures for introducing specific genes into cells. In particular, eucaryotic virus genomes are currently being developed as vectors for the expression of genes in mammalian cells. Vectors based on RNA viruses such as retroviruses or on DNA viruses including papovaviruses, adenoviruses, herpesviruses, or poxviruses have been described (12, 22, 39, 49, 52). Each of these groups of viruses has various advantages and disadvantages as eucaryotic vectors. Thus far, a major group of DNA viruses, the parvoviruses, has not been exploited as potential vectors.

One parvovirus, adeno-associated virus (AAV), has a number of features which suggest that it may be useful as a eucaryotic expression vector. The AAV type 2 (AAV2) genome is 4,675 nucleotides long (57) and contains three transcription promoters (6, 15, 36, 38, 40). AAV replication occurs in a wide variety of hosts, including human, simian, or rodent cells, provided the appropriate adenovirus or herpesvirus helper functions are available (4). In the absence of helper functions, the infecting AAV genome covalently integrates into cell chromosomal locations but can be rescued by addition of helper virus (8, 18, 20). Thus, AAV represents an inducible system and may be useful as a vector for either transient expression or integration of genes in mammalian cells.

When a recombinant plasmid, pAV2, containing the entire AAV2 DNA genome inserted in a pBR332-derived bacterial plasmid via *Bgl*II linkers is transfected into human 293 cells together with helper adenovirus, the AAV genome is rescued from the recombinant and replicated to produce infectious progeny virus (35). Here we describe experiments which show that a non-AAV coding sequence inserted into pAV2 can be expressed transiently under the control of either of two AAV promoters. For these studies we have used the coding sequence for the procaryotic gene for chloramphenicol acetyltransferase (CAT). Transient expression of CAT activity in mammalian cells can be readily assayed (13, 32).

We inserted the CAT gene-coding sequence downstream of the AAV promoter p_{40} (plasmid pAVHiCAT) or p_{19} (plasmid pAVBcCAT). Both constructions expressed CAT activity when transfected into human 293 cells or HeLa cells. Comparison of the level of CAT expression in the two cell lines in the presence or absence of adenovirus particles or a plasmid containing the adenovirus early region 1A (E1A) gene suggests that the two AAV promoters are differentially regulated.

Transfection of either pAVHiCAT or pAVBcCAT into 293 cells in the presence of both wild-type AAV DNA and adenovirus allowed replication and packaging of either type of AAV-CAT recombinant genome into AAV particles. Subsequent infection of these recombinant AAV particles into other cells resulted in expression of CAT activity. These parvectors, which can be used for transient expression and packaged into AAV particles, increase the number of available vectors and provide additional flexibility in design of experiments to introduce various genes into mammalian cells.

MATERIALS AND METHODS

Viruses and cells. AAV2 and adenovirus 2 (Ad2) were grown as described before (5). Production of AAV capsid

* Corresponding author.

Sarepta Exhibit 1035, Page 1

antigen was assayed by fixing cells at 24 to 30 h after infection or 48 h after transfection and staining for AAV capsid protein, using an indirect immunofluorescence assay as described previously (5). Production of infectious AAV was assayed by titrating cell lysates on KB cells grown in monolayer and using the same AAV immunofluorescence procedure (5).

Human 293-31 cells, an established line of adenovirus-transformed human embryonic kidney cells (14), or HeLa cells were grown at 37°C in monolayer culture in 35-mm plastic dishes in Eagle minimal essential medium supplemented with antibiotics and 10% fetal calf serum.

Growth and purification of plasmids. Plasmids or DNA ligation mixtures were used to transform *Escherichia coli* HB101, using the RbCl procedure (31), and ampicillin-resistant colonies were selected by growth on Luria broth agar containing ampicillin (50 μg/ml). Individual colonies were examined for the presence of the appropriate plasmid by growing small-scale cultures in Luria broth medium and lysing according to the rapid boiling procedure (21). Plasmids in the minilysates were analyzed by restriction endonuclease cleavage and electrophoresis in agarose gels. All restriction endonucleases were purchased from New England Biolabs (Beverley, Mass.), Bethesda Research Labs (Gaithersburg, Md.), or Boehringer Mannheim (Indianapolis, Ind.) and were used according to the supplier's specifications. When required, DNA fragments were purified from agarose gels according to the procedures of Langridge et al. (33) or Weislander (62). Large-scale preparations of plasmids were obtained by growing the appropriated *E. coli* strain in minimal M9 medium supplemented with Casamino Acids (0.2%), thiamine (1 μg/ml), and ampicillin (20 μg/ml) and amplifying with chloramphenicol (100 μg/ml) or kasugamycin (1 mg/ml). Plasmids were then purified according to the procedure of Humphreys et al. (23), as specified by Moore et al. (44).

For cleavage with *Bcl*I, plasmids were grown in the methylation-deficient strain *E. coli* GM119 (9) obtained from N. Jones. All manipulations with recombinant DNA were performed in accordance with National Institutes of Health guidelines.

Construction of individual plasmids. The important features of the plasmids used in this work are listed in Table 1.

Plasmids pSV2CAT and pSV0CAT (13, 32) were obtained from L. Laimins. These two plasmids contain the procaryotic sequences coding for CAT (13) inserted within the simian virus 40 (SV40) early gene transcription unit of an SV40-pBR322 vector. pSV0CAT was derived from pSV2CAT by deletion of the SV40 promoter located 5′ to the inserted CAT sequence. The pSV2CAT and pSV0CAT plasmids used here differ slightly from those described before (13, 32) by an additional deletion of a 610-base pair (bp) *Mbo*I fragment of SV40 DNA (SV40 DNA nucleotides 4,035 to 4,645) immediately 3′ to the inserted CAT gene. This additional deletion removed the SV40 small-t intron (B. Howard, personal communication).

Plasmid pJN20 (obtained from N. Jones) contains the left-hand 0 to 7.8% *Hin*dIII fragment of Ad5 inserted at the *Hin*dIII site of pBR322 and expresses the Ad5 E1A gene (27).

Figure 1 shows the structure of the AAV2 genome, the location of relevant restriction sites, and the structures of individual AAV plasmids used in this study. pA11P.Xba is a pBR322-derived plasmid containing a polylinker sequence (17, 35). pAV2 contains the entire AAV2 genome inserted via *Bgl*II linkers into pA11P.Xba (35). pAV*dl*Hc23 was derived from pAV2 by deletion of the *Hin*cII fragment between map positions 51 and 86 (i.e., between sites Hc2 and Hc3) as described elsewhere (59).

TABLE 1. Plasmids used in this work[a]

Plasmid	Relevant properties	Reference(s)
pSV2CAT	CAT expression from early SV40 promoter	13,32
pSV0CAT	Deletion of promoter from pSV2CAT	13,32
pJN20	Expresses Ad5 E1A gene product	27
pA11P · Xba	pBR322 derivative containing polylinker	17,35
pAV2	Contains infectious AAV2 genome in pA11P · Xba	35
pAV*dl*Hc23	Deletion of capsid antigen from pAV2	This work
pAVHiCAT	CAT expression from AAV P_{40}	This work
pAVHiTAC	CAT in opposite orientation to pAVHiCAT	This work
pAVBcTAC	CAT expression from AAV p_{19}	This work
pAVBcTAC	CAT in opposite orientation to pAVBcCAT	This work

[a] Construction and detailed properties of the plasmids are described further in the text.

pAVHiCAT and pAVHiTAC were derived by insertion of the CAT coding sequence into the *Hin*dIII site of pAV*dl*Hc23, and pAVBcCAT and pAVBcTAC were derived by insertion of the CAT sequence between the *Bcl*I and *Bst*EII sites of pAV2. These plasmids were constructed as follows. The CAT coding sequence was obtained by cleaving the modified pSV0CAT described above with *Hin*dIII and *Hpa*I to generate a 873-bp *Hin*dIII/*Hpa*I fragment. pAV*dl*Hc23 was cleaved with *Hin*dIII and ligated with the 868-bp CAT fragment, using T4 DNA ligase (Boehringer Mannheim). The ligation mixture was then treated with DNA polymerase I Klenow fragment (Boehringer Mannheim) to convert the remaining *Hin*dIII cohesive end to a blunt end. This repaired end was then joined to the *Hpa*I blunt end with T4 DNA ligase (Collaborative Research, Waltham, Mass.) under the conditions for blunt-end ligation. This yielded two plasmids, pAVHiCAT and pAVHiTAC, containing the CAT sequence in opposite orientations. In a second set of constructions, pAV2 was cleaved with *Bcl*I and *Bst*EII. The cohesive ends of the pAV2 large *Bcl*I/*Bst*EII fragment as well as that of the CAT-containing *Hin*dIII/*Hpa*I fragment were blunt ended with DNA polymerase I Klenow fragment. The two fragments were then joined by blunt-end ligation to yield two plasmids, pAVBcCAT and pAVBcTAC, containing the CAT sequence inserted in opposite orientations. In pAVBcCAT the construction resulted in regeneration of the *Bcl*I site as verified by *Bcl*I cleavage of pAVBcCAT.

Transfection of cells with recombinant plasmid DNA. All transfection experiments were performed on 293 or HeLa cells grown in 35-mm plastic dishes, using either a DEAE-dextran or a $CaPO_4$ procedure. A total of 10^6 cells were seeded 24 h before transfection.

The DEAE-dextran procedure (42, 45) was used when assaying recombinant AAV DNA for replication and was performed as described before (35). Mixtures of recombinant DNA (1 to 20 μg per dish as specified in individual experiments) in the presence or absence of helper adenovirus particles (5 PFU per cell) were added to subconfluent cells in the presence of minimal essential medium containing 250 μg

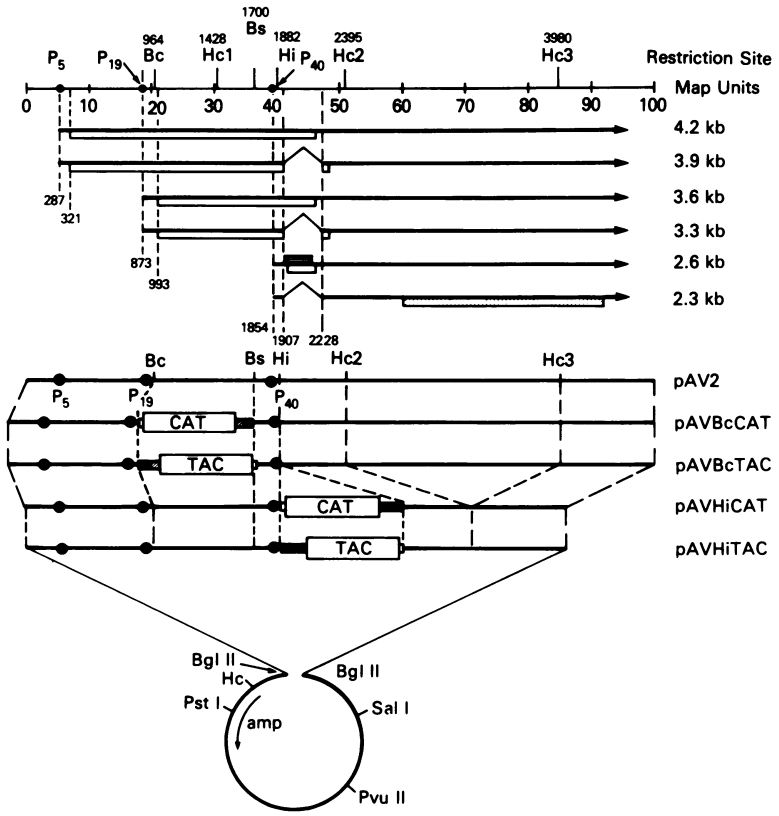

FIG. 1. Structure of the AAV2 genome and AAV-CAT plasmids. The upper portion shows diagrammatically the structure of AAV2 DNA on a scale of 100 map units. Restriction endonuclease sites are designated as follows: Bc, *Bcl*I; Hc, *Hinc*II; Bs, *Bst*EII; Hi, *Hin*dIII. For Hc, the sites in AAV are designated numerically from the left as indicated by the number following the abbreviated name, e.g., Hc2. Horizontal arrows show the structures of the six AAV mRNAs having the sizes as indicated (in kilobases [kb]) at the right. The caret indicates the AAV intron. The arrowhead indicates the polyadenylation site at 96 map units. p_5, p_{19} and p_{40} indicate the three promoter sites. Based on sequence analysis, potential open reading frames accessible from each RNA are indicated by the boxes above or below individual RNAs as follows: orf-1, open boxes; orf-2, stipled box (map units 60 to 92); orf-3, horizontally shaded box. The location of restriction sites, 5′ termini of RNAs, initiation and termination sites of reading frames, and the intron are also designated by the nucleotide number according to the AAV DNA numbering scheme of Srivastava et al. (57), in which nucleotide 1 is at the left and nucleotide 4,675 is at the right (100 map units). The lower portion shows the structure of the AAV-CAT plasmids. The parental AAV-plasmid pAV2 contains the entire AAV2 genome (solid horizontal line) inserted into a pBR322-derived plasmid (open circle) via *Bgl*II linkers. The figure is drawn approximately to scale and several reference restriction sites are shown in the plasmid sequence as well as the location of the ampicillin resistance gene (amp). The construction of individual plasmids is described fully in the text. Briefly, in pAVBcCAT and pAVBcTAC, the AAV Bc/Bs fragment was replaced by the CAT fragment. In pAVHiCAT and pAVHiTAC, the AAV Hc2/Hc3 fragment was deleted to give the AAV mutant pAV*dl*Hc23, and the CAT fragment was then inserted at the AAV Hi site. The inserted CAT fragment consisted of 29 5′ untranslated nucleotides (small open box), 660 nucleotides of CAT coding sequence (large open box), 86 3′ untranslated nucleotides (diagonally shaded box), and 98 nucleotides of SV40 sequence.

of DEAE-dextran per ml (average molecular weight, 500,000; Sigma Chemical Co., St. Louis, Mo.) and 50 mM Tris-hydrochloride (pH 7.5) for 20 min. After 20 min the mixture was removed and the cells were washed once with minimal essential medium containing 10% fetal calf serum. The wash medium was then replaced with fresh medium and the incubation was continued. For in vivo labeling of viral DNA, the cell growth medium was replaced with low-phosphate medium (1% of normal phosphate concentration) at 16 h after transfection and supplemented with $H_3{}^{32}PO_4$ (10 to 20 μCi/ml; New England Nuclear, Boston, Ma.).

$CaPO_4$ transfection was used when the recombinant plasmids were to be tested for expression of enzyme activity or AAV capsid antigen fluorescence or for packaging recombinant DNA into AAV particles. $CaPO_4$ transfections of mixtures of recombinant DNA were performed essentially according to the procedure of Wigler et al. (63). Adenovirus particles (5 to 10 PFU/ml) were added 1 h before transfection.

Analysis of intracellular viral and plasmid DNA. Viral DNA was selectively extracted from cells at 40 h after transfection, using a Hirt (19) procedure modified to prevent reannealing of AAV single-stranded DNA and to remove contaminating RNA as described before (7). DNA was electrophoresed in horizontal 0.7% agarose gels (11 by 14 cm) in 10 mM Tris–40 mM sodium acetate–1 mM EDTA (pH 8.0) at 100 mA per gel. The gels were then dried down and autoradiographed directly with an intensifying screen (Cronex 70; Du Pont Co., Wilmington, Del.) or blotted onto nitrocellulose paper (56) and hybridized with AAV ^{32}P-DNA labeled by in vitro nick-translation (53). After hybridization in 6× SSC (SSC = 0.15 M NaCl plus 0.015 M sodium citrate)

at 70°C for 16 to 24 h, the nitrocellulose paper was washed in 0.1× SSC–0.05% sodium dodecyl sulfate at 52°C and autoradiographed.

Assay of CAT activity in human cells. CAT activity in transfected cells was determined as described before (13). Cell extracts were made at 48 h after transfection. The assay mixture contained (in a final volume of 180 μl) 130 μl of 0.25 M Tris-hydrochloride (pH 7.5), 20 μl of cell extract, 20 μl of 4 mM acetyl coenzyme A, and 0.5 μCi of [dichloroacetyl-1,2-^{14}C]chloramphenicol (43.2 Ci/mol; New England Nuclear) and was incubated for 30 to 60 min at 37°C. Reactions were stopped and extracted with cold ethyl acetate, and the extent of acetylation of chloramphenicol was determined by thin-layer chromatography on silica gel plates run with ascending chloroform-methanol (95:5). The thin-layer plate was autoradiographed, the spots were cut out, and the radioactivity was measured by liquid scintillation counting. The results are expressed as the proportion of chloramphenicol acetylated by 20 μl of the cell extract (i.e., by the CAT activity from 2×10^5 cells). Control reactions contained *E. coli* CAT (0.5 U) obtained from P-L Biochemicals (Piscataway, N.J.).

RESULTS

Structure of the AAV2 genome. The structure of the AAV2 genome and the plasmids used in this study are shown in Fig. 1. AAV DNA contains three overlapping transcription units with separate promoters, p_5, p_{19}, and p_{40} (15, 36, 38, 40), and two major open reading frames (orf) as determined from the nucleotide sequence (57). orf-1 is in the left half of the genome and apparently can be entered from transcripts originating from either p_5 or p_{19}. Also, splicing of AAV RNA alters the carboxyl terminus of putative orf-1 proteins. Thus, the four largest AAV RNAs may enable orf-1 to code for at least four proteins differing in their amino or carboxyl termini. Other studies (59) show that orf-1 codes for at least one function, *rep*, which is required for AAV DNA replication. orf-2 in the right half of the genome is apparently accessible from the most abundant 2.3-kilobase mRNA which specifies AAV capsid antigen (26). There are two small reading frames (orf-3 and the carboxy terminus of orf-1) which may be accessible from the unspliced 2.6-kilobase transcript.

Structure of the AAV-CAT plasmids. The DNA containing the CAT coding sequence (1) which we used was a 873-bp fragment including 775 bp of procaryotic Tn*9* sequence followed by 98 bp derived from nucleotides 2,606 to 2,704 (*Hpa*I to *Bcl*I) of SV40 DNA. The SV40 sequence is located within the carboxyl terminus region of the SV40 large-T antigen but contains no SV40 control signals. In the vectors we describe here, the SV40 sequence is located downstream of the CAT termination codon and is not expected to be expressed. The 775 bp of procaryotic DNA contains the CAT coding sequence (660 nucleotides) together with 29 untranslated nucleotides 5′ to the AUG codon and 86 nucleotides 3′ to the UAA termination codon (1).

The structure of the AAV-CAT plasmids is summarized in Fig. 1. The inserted CAT-SV40 sequence contained neither its procaryotic promoter nor any SV40 transcriptional control signals and therefore was expected to be expressed only under the control of AAV transcription signals. The *Hin*dIII site of AAV2 occurs 29 nucleotides downstream from the 5′ terminus of transcripts originating from p_{40} (15, 36). Thus, in the 2.3-kilobase spliced mRNA which is the major AAV transcript, the *Hin*dIII site occurs within the 53-nucleotide untranslated leader. Therefore, in pAVHiCAT, the CAT coding sequence is preceded by 58 untranslated nucleotides downstream from the 5′ start point of transcription from p_{40}. In this construction the CAT coding sequence is not in frame with orf-1. In pAVHiTAC, the orientation of the CAT sequence is opposite to that of the AAV transcription unit and is not expected to be expressed.

The first AUG codon of orf-1 within the AAV p_{19} transcription unit occurs 121 nucleotides downstream from the 5′ terminus of the p_{19} transcripts. The *Bcl*I site occurs 92 nucleotides from the 5′ terminus of this RNA. Insertion of the CAT fragment at this site in pAVBcCAT regenerated the *Bcl*I site. Therefore, in the chimeric p_{19} transcripts, the first AUG codon of the CAT coding frame occurs 134 nucleotides downstream from the 5′ terminus, which is similar to orf-1 in the normal AAV p_{19} mRNA. In pAVBcCAT, the CAT coding sequence is not expected to be translatable by read-through from p_5 transcripts because deletion of p_5 has no effect on expression of CAT (Tratschin, unpublished data). There is one other feature of the p_{19} transcripts which is detailed below (see Discussion). pAVBcTAC has the CAT sequence inserted opposite to the AAV transcriptional unit.

In both pAVBcCAT and pAVHiCAT, the CAT sequence is inserted upstream of the AAV intron and splicing is not required to express CAT. Thus, pAVBcCAT and pAVHiCAT can be used as a measure of p_{19} and p_{40} activity, respectively. Note that in referring to plasmids we use the prefix "p" to designate the entire AAV-plasmid, e.g., pAVHiCAT. In referring to the AAV genome contained in, or rescued from, the plasmid we omit the prefix, e.g., AVHiCAT.

Replication of chimeric AAV-CAT genomes. Replication of the recombinant AAV-CAT genomes was tested in 293 cells. In the presence of adenovirus particles, transfection of 293 cells with plasmids containing intact AAV genomes results in replication of the AAV genome free of the plasmid sequence (35, 54, 54a). Thus, replication of wild-type AAV genomes (58) from pAV2 results in production of monomeric and dimeric duplex replicative form (RF) molecules and progeny ss molecules (Fig. 2). Plasmid pAVHiCAT, like the parent plasmid pAV*dl*Hc23, yielded ^{32}P-labeled, duplex RF molecules of the size expected for the mutant AAV genomes. The AVHiTAC genome consistently replicated very poorly and RF molecules were barely detectable in the gel autoradiogram (Fig. 2, track 2). AVHiCAT did not produce ssDNA (Fig. 2, track 1) presumably because, like AV*dl*Hc23 (Fig. 2, track 6), it is deleted for the capsid protein (59). Neither pAVBcCAT nor pAVBcTAC yielded any replicating genomes, but AVBcCAT could be complemented for RF synthesis by a replicating mutant AAV such as AV*dl*Hc23 (Fig. 2, track 7).

In the absence of adenovirus, none of the AAV genomes, including that from pAV2 or AAV particles, replicated in either 293 or HeLa cells (data not shown). Replication of AAV requires the adenovirus E4 gene (4, 7, 25, 51) which is not expressed in 293 cells or HeLa cells.

Transient expression of CAT activity in 293 cells transfected with CAT plasmids. We first examined the expression of CAT activity in 293 cells transfected with recombinant plasmids in the presence or absence of adenovirus infection. One example of an autoradiogram of a thin-layer assay of CAT activity is shown in Fig. 3. In general, after autoradiographic exposure, the amount of radioactivity was quantitated, and the results from several experiments are summarized in Table 2. Initial experiments (Fig. 3A) performed in the presence of adenovirus showed that pAVBcCAT and

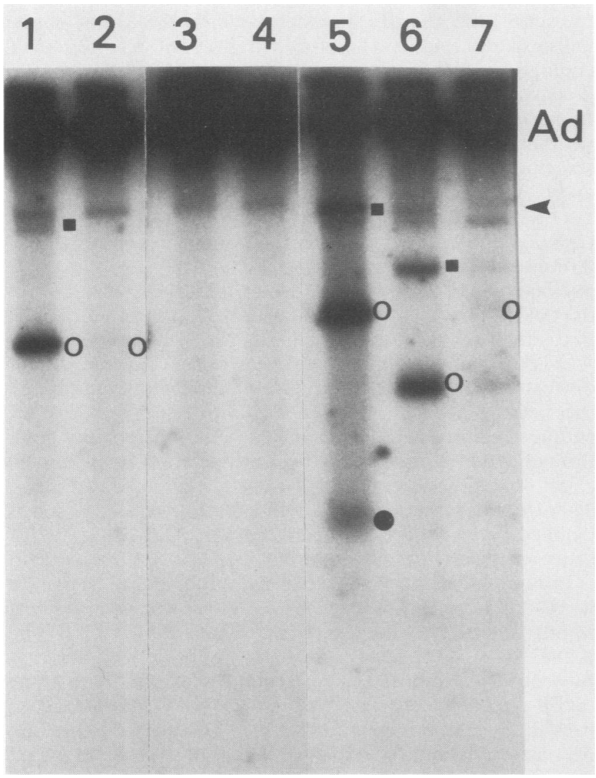

FIG. 2. Replication of AAV vectors. Adenovirus (Ad)-infected 293 cells were transfected with various AAV-plasmid DNAs. The viral DNA, labeled with ^{32}P in vivo, was extracted and electrophoresed in an agarose gel followed by autoradiography as described in the text. Cultures were transfected with 10 μg of supercoiled DNA as follows: track 1, pAVHiCAT; track 2, pAVHiTAC; track 3, pAVBcCAT; track 4, pAVBcTAC; track 5, pAV2; track 6, pAV*dl*Hc23; track 7, pAVBcCAT plus pAV*dl*Hc23. For each culture the AAV DNA species are indicated: duplex RF monomer (○); duplex RF dimer (■); progeny ssDNA (●). In track 7 only AVBcCAT RF DNA is indicated. Lanes 5 to 7 are from a separate gel. The arrow indicates one or two cell DNA bands which are usually seen (35). In some tracks, the duplex RF is obscured. In track 2, the AVHiTAC monomer RF can be seen readily on the original autoradiogram.

pAVHiCAT both expressed CAT activity, whereas there was no detectable expression from either pAVHiTAC or pAVBcTAC or from pAV*dl*Hc23. Apparently, the CAT expression observed from pAVHiCAT or pAVBcCAT was under the control of AAV promoters since insertion of CAT in the opposite orientation abolished the activity. In 293 cells plasmids pAVHiCAT and pAVBcCAT both expressed significant levels of CAT in the absence of adenovirus (Fig. 3B), and, generally, expression from the AAV p_{19} promoter in pAVBcCAT was about two- to threefold higher than that from p_{40} in pAVHiCAT (Table 2). In the presence of the helper adenovirus, CAT expression was increased six- to sevenfold from pAVHiCAT, but there was no significant effect on the level of expression from pAVBcCAT (Fig. 3B). Indeed, the very small increase in CAT expression from pAVBcCAT in the presence of adenovirus seen in the experiment of Fig. 3B was not seen in other experiments (Table 2).

CAT activity was also expressed from plasmid pSV2CAT transfected into 293 cells but not from pSV0CAT in which both the SV40 promoter and the enhancer sequences were deleted (Table 2). Furthermore, CAT expression from pSV2CAT was not significantly altered by coinfection with adenovirus. CAT expression from both of the AAV promoters appeared to be quite efficient as compared with the enhanced SV40 promoter in pSV2CAT.

Expression of CAT from recombinant plasmids in HeLa and 293 cells and effect of adenovirus E1A genes. 293 cells are transformed by Ad5 (14) and express the adenovirus E1A gene product, which is a transcriptional activator of other adenovirus early genes (2, 28, 47). We therefore examined CAT expression from the AAV vector in non-adenovirus-transformed human HeLa cells. CAT expression in HeLa cells from pAVHiCAT was about 10-fold higher than from pAVBcCAT (Table 3). When the HeLa cells were also transfected with a second plasmid, pJN20, which expresses the adenovirus E1A gene, CAT expression from pAVBcCAT was increased significantly, whereas expression from pAVHiCAT was not. When the HeLa cells were infected with adenovirus particles, CAT expression from pAVHiCAT was increased 10-fold and that from pAVBcCAT was increased nearly 4-fold.

In the experiment of Table 3, the levels of CAT expression from pAVHiCAT in HeLa cells were similar to those in 293 cells (Table 2). However, 293 and HeLa cells do not necessarily exhibit the same efficiency of transfection for exogenous DNA, and therefore the levels of CAT activity cannot be directly compared in the two cell lines. Nevertheless, these results suggest that the AAV promoters are differentially regulated. As judged from the HeLa cells, p_{40} may be intrinsically more efficient than p_{19} but in these cells the expression from p_{19} could be increased by addition of a plasmid expressing E1A. This result is reflected in 293 cells in which p_{19} was somewhat more efficient than p_{40}, although we have not determined whether the level of E1A protein in 293 cells is equivalent to the level in HeLa cells transfected with the E1A plasmid. Thus, p_{19} is more readily stimulated by E1A than is p_{40}.

CAT expression after packaging of recombinant AAV CAT genomes in AAV particles. We tested whether the AVHiCAT or AVBcCAT genomes could be packaged into AAV particles when the capsid protein or replication function was supplied by complementing pAV2 DNA, as shown in the experiment summarized in Fig. 4 and Table 4. 293 cell cultures were transfected with pAVHiCAT or pAVBcCAT with or without pAV2 in the presence of adenovirus. At 44 h, portions of each of these passage 0 (P0) cultures were extracted for viral DNA or assay of CAT activity. The remainder of each culture was lysed and used to infect fresh cultures (P1) of 293 cells in the presence or absence of additional adenovirus. The P1 cultures were analyzed at 44 h for viral DNA and CAT activity as before. The analysis of viral DNA from the P0 and P1 cultures is shown in Fig. 4, and the analysis of CAT activity is shown in Table 4.

In P0, both AAV-CAT constructions gave CAT activity at the expected levels (Table 4). The presence of complementing pAV2 had little effect on expression from HiCAT but decreased that from BcCAT. The reason for this is not known but is under investigation. Particles from the P0 culture transfected with pAVHiCAT plus pAV2 yielded a significant amount of CAT activity in the P1 culture in the presence of adenovirus (Table 4). No CAT activity was detected in P1 if the original P0 culture did not have pAV2 or if adenovirus was absent in P1. These results show that, in

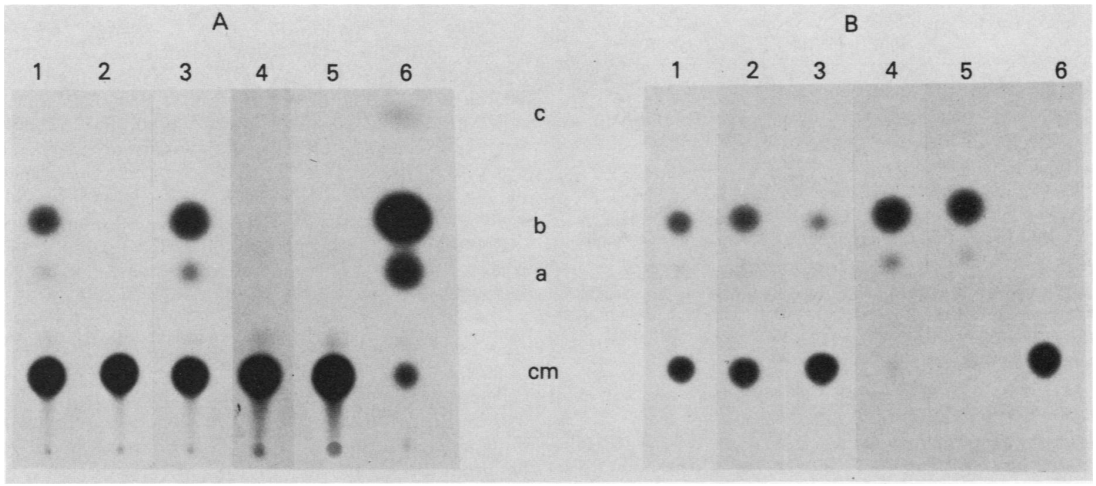

FIG. 3. Assay of CAT activity in 293 cells transfected with AAV-CAT plasmids. Cells were transfected with AAV plasmid DNA, and at 44 h lysates were prepared for assay of CAT activity, using the thin-layer procedure described in the text. Autoradiograms of thin-layer plates from such assays are shown. The four radioactive species are: cm, [^{14}C]chloramphenicol; a, 1-acetate-chloramphenicol; b, 3-acetate-chloramphenicol; c, 1,3-acetate-chloramphenicol. (A) Tracks 1 to 4 show lysates from adenovirus-infected 293 cells transfected with pAVBcCAT (track 1), pAVBcTAC (track 2), pAVHiCAT (track 3), or pAVHiTAC (track 4). Controls with (track 6) or without (track 5) purified CAT were performed. (B) Tracks 2 and 4 were from adenovirus-infected cells; tracks 1 and 3 were in the absence of adenovirus. 293 cells were transfected as in (A) with pAVBcCAT (tracks 1 and 2) or pAVHiCAT (tracks 3 and 4) DNA. Control experiments with (track 5) or without (track 6) purified CAT were performed.

the P0 cultures, AVHiCAT genomes were replicated and packaged into AAV particles when complemented with capsid protein by pAV2.

Similar results were obtained with the BcCAT genomes (Table 4). A low level of CAT expression was seen in P1 in the presence of adenovirus when pAV2 was used in P0. A similar interpretation of these reults can be made except that the failure to obtain packaged AVBcCAT genomes in P0 in the absence of pAV2 presumably reflects the *rep*$^-$ phenotype of pAVBcCAT rather than the inability to provide capsid. To observe CAT expession in the P1 cells, adenovirus was supplied to allow conversion of the ss genomes to double-stranded structures.

Interpretation of the experiment shown in Table 4 is strengthened by the analysis of the DNA genomes (Fig. 4). In P0, AVHiCAT genomes replicated whether or not pAV2 was present, whereas AVBcCAT genomes replicated only when complemented with pAV2 (Fig. 4A and B, tracks 1 to 4). Replication of the complementing wild-type genomes derived from pAV2 was detected by blotting with the AAV DNA probe (Fig. 4B, tracks 2 and 4). In the P1 cultures, replication of AVHiCAT (Fig. 4A, track 8) or AVBcCAT (Fig. 4A, track 10) genomes was seen only after infection with lysates derived from P0 cultures that were complemented with pAV2. In these same P1 cultures, replication of the complementing AAV genomes can also be seen (Fig. 4B, tracks 8 and 10). The control P1 cultures infected with lysates from uncomplemented P0 cells showed no evidence of either AAV or CAT sequences (Fig. 4A and B, tracks 7 and 9). When the lysate from the P0 culture transfected with pAVHiCAT and pAV2 was infected with P1 cells in the absence of adenovirus, the only DNAs detected were two faint bands which corresponded to the unreplicated, single strands of AVHiCAT (Fig. 4A, track 6) and AAV wild type (Fig. 4B, track 6). That these are indeed single strands was verified by reannealing, before electrophoresis, a portion of the DNA preparations which converted this DNA to double strands (data not shown). The single strands of AVHiCAT DNA were not detected in P1 cells if the P0 culture was not complemented with pAV2 (Fig. 4A and B, track 5). These unreplicated single strands are characteristic of AAV genomes seen in cells infected by AAV particles in the absence of adenovirus (41).

Two additional features of the experiment in Fig. 4 should be noted. First, although single strands of AVHiCAT or AVBcCAT DNA were not detected in the P0 cells, they

TABLE 2. CAT expression from AAV vectors in 293 cells[a]

Plasmid	% [^{14}C]chloramphenicol acetylated					
	Expt 1		Expt 2		Expt 3	
	−Ad	+Ad	−Ad	+Ad	−Ad	+Ad
pAVHiCAT	16.2 (1.0)	95.5 (5.9)	10.0 (1.0)	67.6 (6.7)	10.5 (1.0)	58.4 (5.6)
pAVBcCAT	40.6 (2.5)	37.1 (2.3)	30.8 (3.1)	28.2 (2.8)		
pAV*dl*Hc23	0	0	0	0	0	0
pSV2CAT					11.5 (1.1)	9.9 (0.9)
pSV0CAT					0	0

[a] Cells were transfected with 5 μg of the indicated plasmid in the presence (+) or absence (−) of 5 PFU of adenovirus (Ad) per cell. CAT activity was measured and quantitated in cell lysates made 40 h after transfection, as described in the text. Values in parentheses show normalized amounts relative to the amount of CAT expression from pAVHiCAT in the absence of adenovirus. Note that data in each experiment have been normalized separately.

TABLE 3. CAT expression from AAV vectors in HeLa cells and the effect of E1A

Plasmid DNA	Amt of CAT activity
pAVHiCAT + pA11P · Xba	4.0 (1.0)
pAVHiCAT + pJN20 (E1A)	5.2 (1.3)
pAVHiCAT + Ad particles	43.9 (11.0)
pAVBcCAT + pA11P · Xba	0.5 (0.1)
pAVBcCAT + pJN20 (E1A)	5.7 (1.4)
pAVBcCAT + Ad particles	1.8 (0.5)

[a] Cells (10^6) were transfected with 5 μg of each of the indicated plasmids and infected with adenovirus (Ad) particles (5 PFU per cell) as indicated. CAT activity was quantitated and normalized as described in Table 2 footnote *a*. pJN20 expressed the Ad5 E1A gene (27).

were clearly present and packaged as shown by analysis of P1 cells. Furthermore, in the P1 cells the single strands of the CAT mutants could be detected. This may reflect other observations that certain AAV mutants accumulate ssDNA relatively inefficiently in a transfection assay (P. Senapathy, J.-D. Tratschin and B. J. Carter, J. Mol. Biol., in press). A second feature of the DNA analysis is the detection of the component labeled as * in P0 and P1 cultures derived from transfection with pAVHiCAT plus pAV2. This component hybridized only to the AAV DNA probe and not to the CAT probe, which, together with its size, suggests that it may represent AVHiCAT genomes in which the CAT insert has been specifically deleted by recombination with the complementing AAV genomes. There is a second type of instability of both AVHiCAT and AVBcCAT genomes evident as revealed by the minor P1 DNA component migrating slightly faster than the AVHiCAT or AVBcCAT genomes (Fig. 4, tracks 8 and 10). These components were not investigated further.

DISCUSSION

The experiments described here show that AAV vectors can be used for transient expression of a foreign gene in human cells. Either of two AAV promoters, p_{19} or p_{40}, can be used for expression of the procaryotic CAT gene in human cells. We have not yet tested whether the third AAV promoter, p_5, can be used in a similar way. Elsewhere it has been shown that the CAT assay generally reflects the amount of functional CAT mRNA in a variety of cells (13). A preliminary analysis indicates that the level of CAT activity

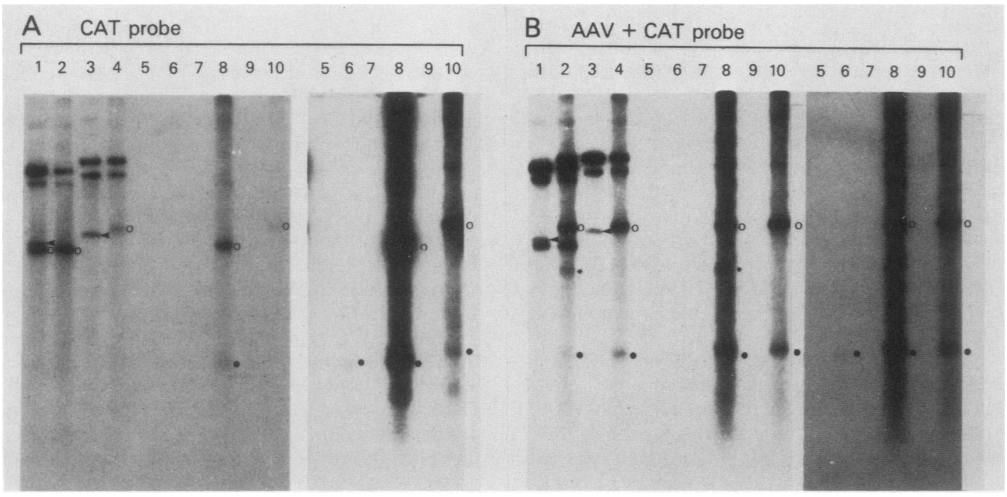

FIG. 4. Introduction into and expression of CAT activity in 293 cells after packaging of AAV-CAT genomes in AAV particles. Four (P0) cultures of 293 cells were infected with adenovirus and transfected with plasmid DNA, using the $CaP0_4$ procedure. After 44 h, viral DNA was isolated from one-fifth of each culture and two-fifths of each culture was taken for CAT assay. The remainder of each P0 culture was used to infect fresh (P1) cultures of 293 cells after treating the lysates with DNase and heating at 60°C. The P1 cultures were again harvested at 44 h to isolate viral DNA and to assay CAT activity. The assays of CAT activity are summarized in Table 4. Analysis of the DNAs isolated from the P0 and P1 cultures is shown. The DNA samples were electrophoresed in an agarose gel and blotted. The blot was first hybridized with an in vitro nick-translated, CAT coding sequence, ^{32}P-DNA probe (A) and autoradiographed. The same blot was then hybridized with an in vitro nick-translated, AAV ^{32}P-DNA probe and autoradiographed again (B). Tracks 1 to 4 show DNA from the P0 cultures transfected as follows: 10 μg of pAVHiCAT (track 1); 10 μg of pAVHiCAT plus 5 μg of pAV2 (track 2); 10 μg of pAVBcCAT (track 3); 10 μg of pAVBcCAT plus 5 μg of pAV2 (track 4). Tracks 7 to 10 show the DNA from the corresponding P1 cultures which were infected with adenovirus and lysates from the P0 cultures shown in tracks 1 to 4, respectively. Tracks 5 and 6 show DNA from P1 cultures infected with the same lysates used for the cultures in tracks 7 and 8 (i.e., the P0 lysates from the cultures shown in tracks 1 and 2) but in the absence of adenovirus. For both (A) and (B) two autoradiographic exposures of tracks 5 to 10 are shown. (A) shows only DNA species containing the CAT-coding sequence, and the monomeric duplex RF DNA (○) and progeny ssDNA (●) of these CAT-containing genomes are indicated. (B) shows all DNA species containing AAV sequences, including recombinant AAV-CAT genomes and wild-type AAV genomes, but only the wild-type monomeric duplex RF DNA (○) and progeny ssDNA (●) are indicated. The asterisk (*) in track 2 shows an AV*dl*Hc23 genome (monomeric duplex RF) derived by in vivo deletion of the CAT insert from AVHiCAT. In both (A) and (B) the arrowheads denote residual input supercoiled pAVHiCAT (track 1) or pAVBcCAT (track 3) DNA. The bulk of the input plasmid DNA accumulates as open circular or linear DNA molecules shown by the slowly migrating doublet in tracks 1 to 4. That the DNA species denoted as single-stranded were indeed single-stranded was verified by electrophoresis after reannealing (not shown).

TABLE 4. Encapsidation of AAV vectors and expression of CAT from packaged genomes[a]

Plasmid DNA	CAT activity in 293 cells		
	P0 (+Ad)	P1	
		−Ad	+Ad
pAVHiCAT	42.8	0	0
pAVHiCAT + pAV2	31.5	0	6.1
pAVBcCAT	7.9	ND	0
pAVBcCAT + pAV2	2.4	ND	0.6

[a] Portions of the cultures from the experiment described in Fig. 4 were assayed for CAT activity. Results are expressed as the proportion of [^{14}C]chloramphenicol which was acetylated in the assay. In P0 the cells (10^6 per culture) were transfected with 5 μg of plasmid DNA as shown, in the presence of adenovirus. P1 cells were infected with the corresponding P0 lysates in the presence (+) or absence (−) of adenovirus (Ad). ND, Not determined.

expressed from pAVBcCAT and pAVHiCAT does reflect the amount of mRNA and that the transcripts are initiated from the expected positions in the AAV nucleotide sequence (Tratschin, unpublished data). Therefore, our experiments probably reflect the relative activities of the two AAV promoters.

The AAV-CAT genomes could be packaged into AAV particles when complemented with wild-type AAV and adenovirus. It is of interest that the AVBcCAT genome, which is about 3% (150 nucleotides) longer than a normal AAV genome, can be packaged. However, we have not determined an upper limit for the size of DNA which can be packaged into AAV particles. The AVHiCAT genome was packaged into particles much more efficiently than AVBcCAT. This may reflect the increased size of the AVBcCAT genome or more efficient replication of AVHiCAT.

When 293 cells were infected with packaged AAV-CAT genomes, CAT was expressed if adenovirus was present. The adenovirus was required presumably to allow the infecting AAV-CAT genome to form double-stranded transcription templates. However, these experiments suggest that this vector may be useful for integration into the cell genome either by transfection with the RNA or by packaging into AAV particles. Furthermore, when the amount of CAT expression (Table 4) is compared with the amount of input DNA (Fig. 4), infection with encapsidated genomes appears to be much more efficient than transfection for introducing biologically active DNA into cells. Other studies to be described elsewhere (J.-D. Tratschin, I. L. Miller, and B. J. Carter, unpublished data) show that this vector is indeed very efficient for chromosomal integration of selective markers.

Insertion of the CAT sequence at the *Hin*dIII site did not prevent RF replication but prevented accumulation of progeny single strands. Insertion between the *Bcl*I and *Bst*IIE sites prevented both RF and ssDNA synthesis. These results are consistent with other studies (59) which show that AAV RF replication requires a *rep* function coded by orf-1 and is blocked by deletions to the left of the *Hin*dIII site but not by the deletion of sequences between the *Hin*dIII site and the *Kpn*I site at 89 map units. Because of the requirement for capsid protein to accumulate AAV ssDNA (46), deletions in orf-2 prevent synthesis of both AAV capsid and ssDNA. Thus, plasmids pAVHiCAT and pAVHiTAC, like the parent plasmid pAV*dl*Hc23, each yielded double-stranded RF molecules but no ssDNA. The AVHiTAC genomes appeared to replicate much less well than the AVHiCAT genomes. This may be due to an effect on the efficiency with which the AAV *rep* product functions, depending upon the precise structure of its apparent carboxyl terminus.

The adenovirus E1A gene product is a transcriptional activator of other adenovirus early genes (2, 28, 41, 47, 61) as well as certain resident cell genes (48) and some exogenously introduced cellular genes (11, 60). This transcriptional activation is mediated mainly by the product of the E1A 13S mRNA rather than the E1A 12S mRNA product (3, 41, 43). The precise mechanism of activation by E1A is not known but may reflect a positive regulation (11, 16, 60, 61), perhaps by interacting with cell factors (24) to catalyze the formation of transcription complexes (10).

The expression of CAT from the two AAV promoters p_{19} and p_{40} is apparently regulated differently with respect to E1A. Expression from pAVBcCAT (i.e., from p_{19}) is regulated by the adenovirus E1A gene. Thus, in 293 cells which express both adenovirus genes E1A and E1B, pAVBcCAT expressed higher levels of CAT than in HeLa cells. However, CAT expression from pAVBcCAT in HeLa cells was increased when plasmid pJN20, which expresses the adenovirus E1A gene but not E1B (27), was present. Although E1A activated expression from p_{19}, a low amount of expression was seen in the absence of E1A in HeLa cells. This may mean either that p_{19} can indeed function at a low level in the absence of E1A as occurs for other E1A-activated promoters (10, 47) or that HeLa cells may be already partially activated in the same way that occurs after expression of E1A (29).

The AAV p_{40} promoter functioned efficiently in either 293 or HeLa cells in the absence of adenovirus but in both types of cell, expression from this promoter was increased 6- to 10-fold when adenovirus was present. However, this additional stimulation does not appear to be due simply to the E1A expression in adenovirus-infected cells because CAT expression from p_{40} was not increased by simultaneous transfection of the HeLa cells with an E1A plasmid, pJN20. This suggests that some adenovirus function other than E1A may activate p_{40} expression or that this AAV promoter may be preferentially activated as a result of replication of the AVHiCAT genome either because of increased copy number or because the replicating genome may provide a transcription template with a different conformation. Further experiments are required to resolve these possibilities. Other studies have shown that AAV capsid protein expression from p_{40} transcripts is also post-transcriptionally regulated by the adenovirus E2A gene product and VA RNA (25, 26), but the E2A product is not required for AAV RF synthesis (46). Since AAV RF synthesis requires the AAV *rep* gene product, this suggests that any *rep* gene product synthesized from a p_{19} transcript is apparently not regulated by the same post-transcriptional controls that regulate the capsid protein expression from p_{40} transcripts. This is consistent with the results described here because expression of CAT from p_{19} was not increased by the presence of adenovirus. These considerations also indicate that expression of the AAV *rep* gene and capsid gene are regulated by different mechanisms.

The results reported here are significant for the physiology of the AAV growth cycle (4). AAV RF replication requires expression of the AAV *rep* function from either or both of the p_5 and p_{19} promoters (59) as well as an adenovirus early region E4 gene product (7, 25, 51). Subsequent accumulation of AAV progeny ssDNA and particle assembly requires expression of the AAV capsid protein from p_{40} (46). Although we have not analyzed the control of the AAV p_5 promoter, any *rep* function expressed from p_{19} would be

stimulated by the E1A protein, which also stimulates expression of adenovirus E4 gene products (2, 3, 28, 41, 43, 61). Thus, in a normal infection with AAV and adenovirus, E1A may stimulate AAV RF replication both directly by activation of p_{19} and indirectly via activation of E4. Replication of the AAV genomes or some additional adenovirus function (25, 26), or both, may then stimulate expression of large amounts of the AAV capsid protein which is required in stoichiometric amounts for particle assembly. Adenovirus mutants such as Ad5*dl*312, which are deleted for the E1A gene, can grow in the absence of any E1A function when infected at high multiplicity but at low multiplicity grow only on cells, such as 293, which express E1A (55). We have also shown that AAV can grow in the absence of E1A function when Ad5*dl*312 was present at high multiplicity but not at low multiplicity (41). This is consistent with the results reported here since p_{19} apparently functions at a low level even in the absence of E1A in HeLa cells. If Ad5*dl*312 is present at high multiplicity, expression of the E4 gene can occur also in the absence of E1A. This, together with a low level of AAV *rep* expression, may be sufficient to allow AAV replication to begin. This in turn could amplify the AAV templates and allow expression of additional *rep* gene product as well as the AAV capsid gene, which in any case can be expressed in the absence of E1A. These observations suggest that the results observed with the AAV-CAT genomes in the transfection experiments may indeed reflect normal events in physiological infections with virus particles.

It was noted above that in the p_{19} transcripts from AVBcCAT, the initiating AUG for CAT is located 134 nucleotides from the mRNA terminus and in normal AAV p_{19} RNA the apparent AUG for entering orf-1 is 121 nucleotides from the terminus. Interestingly, in both transcripts the sequence from 83 to 94 nucleotides downstream from the 5′ terminus is AUGCGCCGGTGA, which contains an AUG codon and an in-frame terminating TGA codon.. This AUG codon is not in frame with the downstream AUG codons which are apparently used for translation of CAT or orf-1. At least in AVBcCAT, translation from a further downstream AUG is apparently not blocked. This observation is of interest because there are now some exceptions to the general rule that eucaryotic messages are translated from the first AUG triplet (30). Apparently, there may be an optimal sequence context for efficient initiation by eucaryotic ribosomes (30). Furthermore, a very recent report showed that mammalian ribosomes can reinitiate translation after prior initiation and termination at an upstream site (37). Either of these possibilities would explain expression of CAT from AVBcCAT and further studies are in progress. Thus, AAV may represent another example of translational initiation from an internal AUG.

In summary, we have shown that AAV can be used as a vector in human cells to allow transient expression of a foreign gene and that expression from two AAV transcription units is regulated differently. This work shows that AAV will be useful for further studies on expression of genes in eucaryotic cells.

ACKNOWLEDGMENTS

We thank L. Laimins and N. Jones for plasmids and I. Miller for expert assistance. We also thank A. Colberg-Poley, L. Laimins, N. Jones, and B. Howard for useful discussions.

J.-D.T. was partially funded by Schweizerischer Nationalfonds zur Foerderung der wissenschaftlichen Forschung.

LITERATURE CITED

1. **Alton, N., and D. Vapnek.** 1981. Nucleotide sequence analysis of the chloramphenicol resistance transposon Tn9. Nature (London) **282**:864–869.
2. **Berk, A. J., F. Lee, T. Harrison, J. Williams, and P. A. Sharp.** 1979. Pre-early Ad5 gene product regulates synthesis of early viral mRNAs. Cell **17**:935–944.
3. **Carlock, L. R., and N. C. Jones.** 1981. Transformation-defective mutant of adenovirus type 5 containing a single altered E1A mRNA species. J. Virol. **40**:657–664.
4. **Carter, B. J., and C. A. Laughlin.** 1983. Adeno-associated virus defectiveness and the nature of the helper function, p. 67–127. *In* K. Berns (ed.), The parvoviruses. Plenum Publishing Corp., New York.
5. **Carter, B. J., C. A. Laughlin, L. M. de la Maza, and M. W. Meyers.** 1979. Adeno-associated virus auto-interference. Virology **92**:449–462.
6. **Carter, B. J., C. A. Laughlin, and C. J. Marcus-Sekura.** 1983. Parvovirus transcription, p. 153–207. *In* K. Berns (ed.), The parvoviruses. Plenum Publishing Corp., New York.
7. **Carter, B. J., C. J. Marcus-Sekura, C. A. Laughlin, and G. Ketner.** 1983. Properties of an adenovirus mutant, Ad2dl807, having a deletion near the right hand genome terminus: failure to help AAV DNA replication. Virology **126**:505–512.
8. **Cheung, A. M. K., M. D. Hoggan, W. W. Hauswirth, and K. I. Berns.** 1980. Integration of the adeno-associated virus genome into cellular DNA in latently infected human Detroit 6 cells. J. Virol. **33**:739–748.
9. **Garret, J., and R. Young.** 1982. Lethal action of bacteriophage lambda S gene. J. Virol. **44**:886–892.
10. **Gaynor, R. B., and A. J. Berk.** 1983. *Cis*-acting induction of adenovirus transcription. Cell **33**:683–693.
11. **Gaynor, R. B., D. Hillman, and A. J. Berk.** 1984. Adenovirus early region 1A protein activates transcription of a non-viral gene introduced into mammalian cells by infection or transfection. Proc. Natl. Acad. Sci. U.S.A. **81**:1193–1197.
12. **Gluzman, Y.** 1983. Eukaryotic viral vectors. Cold Spring Harbor Laboratory, Cold Spring Harbor, N.Y.
13. **Gorman, C. M., L. F. Moffat, and B. H. Howard.** 1982. Recombinant genomes which express chloramphenicol acetyltransferase in mammalian cells. Mol. Cell. Biol. **2**:1044–1051.
14. **Graham, F. L., J. Smiley, W. C. Russell, and R. Naiva.** 1977. Characteristics of a human cell line transformed by DNA from adenovirus type 5. J. Gen. Virol. **36**:59–72.
15. **Green, M., and R. G. Roeder.** 1980. Definition of a novel promoter for the major adeno-associated virus mRNA. Cell **22**:231–242.
16. **Green, N. R., R. Treisman, and T. Maniatis.** 1983. Transcriptional activation of cloned human β-globin genes by viral immediate-early gene products. Cell **35**:137–148.
17. **Gruss, P., N. Rosenthal, M. Konig, R. W. Ellis, T. Y. Shih, E. M. Scolnik, and G. Khoury.** 1982. The expression of viral and cellular p21 ras genes using SV40 as a vector. p. 13–17. *In* Y. Gluzman (ed.), Eukaryotic viral vectors. Cold Spring Harbor Laboratory, Cold Spring Harbor, N.Y.
18. **Handa, H., K. Shiroki, and H. Shimojo.** 1977. Establishment and characteristics of KB cell lines latently infected with adeno-associated virus type 1. Virology **82**:84–92.
19. **Hirt, B.** 1967. Selective extraction of polyoma DNA from infected mouse cell cultures. J. Mol. Biol. **26**:365–369.
20. **Hoggan, M. D., G. F. Thomas, and F. B. Johnson.** 1973. Continuous carriage of adeno-associated virus genome in cell culture in the absence of adenovirus, p. 243–249. *In* Proceedings of the Fourth Lepetit Colloquium, Cocoyac, Mexico. North-Holland Publishing Co., Amsterdam.
21. **Holmes, D. S., and M. Quigley.** 1981. A rapid boiling method for the preparation of bacterial plasmids. Anal. Biochem. **114**:193–198.
22. **Howard, B. H.** 1983. Vectors for introducing genes into cells of higher eukaryotes. Trends Biochem. Sci. **8**:209–212.
23. **Humphreys, G. O., G. A. Willshaw, and E. S. Anderson.** 1975. A simple method for the preparation of large quantities of pure plasmid DNA. Biochim. Biophys. Acta **383**:457–463.

24. **Imperiale, M. J., L. T. Feldman, and J. R. Nevins.** 1983. Activation of gene expression by adenovirus and herpesvirus regulatory genes acting in *trans* and by a *cis*-acting adenovirus enhancer element. Cell **35**:127–136.
25. **Janik, J. E., M. M. Huston, and J. A. Rose.** 1981. Locations of adenovirus genes required for the replication of adeno-associated virus. Proc. Natl. Acad. Sci. U.S.A. **78**:1925–1929.
26. **Jay, F. T., C. A. Laughlin, and B. J. Carter.** 1981. Eukaryotic translational control: adeno-associated virus protein synthesis is affected by a mutation in the adenovirus DNA-binding protein. Proc. Natl. Acad. Sci. U.S.A. **78**:2927–2931.
27. **Jones, N. C., J. D. Richter, D. L. Weeks, and L. D. Smith.** 1983. Regulation of adenovirus transcription by an E1A gene in microinjected *Xenopus laevis* oocytes. Mol. Cell. Biol. **3**:2131–2142.
28. **Jones, N. C., and T. E. Shenk.** 1979. An adenovirus type 5 early gene function regulates expression of other early viral genes. Proc. Natl. Acad. Sci. U.S.A. **76**:3665–3669.
29. **Kao, H.-T., and J. R. Nevins.** 1983. Transcriptional activation and subsequent control of the human heat-shock gene during adenovirus infection. Mol. Cell. Biol. **3**:2958–2965.
30. **Kozak, M.** 1984. Point mutations close to the AUG initiator codon affect the efficiency of translation of rat preproinsulin in vivo. Nature (London) **308**:241–246.
31. **Kushner, S. R.** 1978. An improved method for transformation of *Escherichia coli* with ColE1-derived plasmids, p. 17. *In* H. B. Boyer and S. Nicosia (ed.), Genetic engineering, Elsevier/North-Holland, Amsterdam.
32. **Laimins, L. A., G. Khoury, C. Gorman, B. Howard, and P. Gruss.** 1982. Host-specific activation of transcription by tandem repeats from simian virus 40 and moloney murine sarcoma virus. Proc. Natl. Acad. Sci. U.S.A. **79**:7453–7457.
33. **Langridge, J., P. Langridge, and P. L. Berquist.** 1980. Extraction of nucleic acids from agarose gels. Anal. Biochem. **103**:264–271.
34. **Laughlin, C. A., N. Jones, and B. J. Carter.** 1982. Effect of deletions in adenovirus early region 1 genes upon replication of adeno-associated virus. J. Virol. **41**:868–876.
35. **Laughlin, C. A., J.-D. Tratschin, H. Coon, and B. J. Carter.** 1983. Cloning of infectious adeno-associated virus genomes in bacterial plasmids. Gene **23**:65–73.
36. **Laughlin, C. A., H. Westphal, and B. J. Carter.** 1979. Spliced adeno-associated virus RNA. Proc. Natl. Acad. Sci. U.S.A. **76**:5567–5571.
37. **Liu, C.-C., C. C. Simonsen, and A. D. Levinson.** 1984. Initiation of translation at internal AUG codons in mammalian cells. Nature (London) **309**:82–85.
38. **Lusby, E. W., and K. I. Berns.** 1982. Mapping of 5′-termini of two adeno-associated virus RNAs in the left half of the genome. J. Virol. **41**:518–526
39. **Mackett, M., G. L. Smith, and B. Moss.** 1982. Vaccinia virus: a selectable eukaryotic cloning vector. Proc. Natl. Acad. Sci. U.S.A. **79**:7415–7419.
40. **Marcus, C. J., C. A. Laughlin, and B. J. Carter.** 1981. Adeno-associated virus transcription. Eur. J. Biochem. **121**:147–154.
41. **Marcus-Sekura, C. J., and B. J. Carter.** 1983. Chromatin-like structure of adeno-associated virus DNA in infected cells. J. Virol. **48**:79–87.
42. **McCutchan, J. H., and J. S. Pagano.** 1968. Enhancement of the infectivity of simian virus 40 deoxyribonucleic acid with diethylaminoethyl-dextran. J. Natl. Cancer Inst. **41**:351–357.
43. **Montell, C., E. F. Fisher, M. H. Caruthers, and A. J. Berk.** 1982. Resolving the function of overlapping viral genes by site-specific mutagenesis at a mRNA splice site. Nature (London) **295**:380–384.
44. **Moore, D. D., K. Denniston-Thompson, M. E. Furth, B. G. Williams, and F. R. Blattner.** 1977. Construction of chimeric phages and plasmids containing the origin of replication of bacteriophage lambda. Science **198**:1041–1046.
45. **Muzyczka, N.** 1980. Construction of an SV40-derived cloning vector. Gene **11**:63–77.
46. **Myers, M. W., and B. J. Carter.** 1981. Adeno-associated virus replication. The effect of L-canavanine or a helper virus mutation on accumulation of viral capsids and progeny single stranded DNA. J. Biol. Chem. **256**:567–570.
47. **Nevins, J. R.** 1981. Mechanism of activation of early viral transcription by the adenovirus E1A gene product. Cell **26**:213–220.
48. **Nevins, J. R.** 1982. Induction of the synthesis of a 70,000 dalton mammalian heat-shock protein by the adenovirus E1A gene product. Cell **29**:913–919.
49. **Panicali, D., and E. Paoletti.** 1982. Construction of poxviruses as cloning vectors: insertion of the thymidine kinase gene from herpes simplex into the DNA of infectious vaccinia virus. Proc. Natl. Acad. Sci. U.S.A. **79**:4927–4931.
50. **Ricciardi, R. P., R. L. Jones, C. L. Cepko, P. A. Sharp, and B. E. Roberts.** 1981. Expression of early adenovirus genes requires a viral encoded acidic polypeptide. Proc. Natl. Acad. Sci. U.S.A. **78**:6121–6125.
51. **Richardson, W. R., and H. Westphal.** 1981. A cascade of adenovirus early functions is required for expression of adeno-associated virus. Cell **27**:133–141.
52. **Rigby, P. W. J.** 1983. Cloning vectors derived from animal viruses. J. Gen. Virol. **64**:255–266.
53. **Rigby, P. W. J., M. Dieckmann, C. Rhodes, and P. Berg.** 1977. Labeling deoxyribonucleic acid to high specific activity in vitro by nick-translation with DNA polymerase. J. Mol. Biol. **113**:237–248.
54. **Samulski, R. J., K. I. Berns, M. Tan, and N. Muzyczka.** 1982. Cloning of adeno-associated virus into pBR322: rescue of intact virus from the recombinant plasmid in human cells. Proc. Natl. Acad. Sci. U.S.A. **79**:2077–2081.

54a. **Senapathy, P., and B. J. Carter.** 1984. Molecular cloning of adeno-associated virus variant genomes and generation of infectious virus by recombination in mammalian cells. J. Biol. Chem. **259**:4661–4666.

55. **Shenk, T. E., N. C. Jones, W. Colby, and D. Fowlkes.** 1980. Functional analysis of Ad5 host range deletion mutants defective for transformation of rat embryo cells. Cold Spring Harbor Symp. Quant. Biol. **44**:367–375.
56. **Southern, E.** 1975. Detection of specific sequences among DNA fragments separated by gel electrophoresis. J. Mol. Biol. **98**:503–521.
57. **Srivastava, A., E. W. Lusby, and K. I. Berns.** 1983. Nucleotide sequence and organization of the adeno-associated virus 2 genome. J. Virol. **45**:555–564.
58. **Straus, S. E., E. D. Sebring, and J. A. Rose.** 1976. Concatemers of alternating plus and minus strands are intermediates in adeno-associated virus DNA synthesis. Proc. Natl. Acad. Sci. U.S.A. **73**:742–746.
59. **Tratschin, J.-D., I. L. Miller, and B. J. Carter.** 1984. Genetic analysis of adeno-associated virus: properties of deletion mutants constructed in vitro and evidence for an adeno-associated virus replication function. J. Virol. **51**:611–619.
60. **Treisman, R., M. R. Green, and T. Maniatis.** 1983. *cis* and *trans* activation of globin gene transcription in transient assays. Proc. Natl. Acad. Sci. U.S.A. **80**:7428–7432.
61. **Weeks, D. L., and N. C. Jones.** 1983. E1A control of gene expression is mediated by sequences 5′ to the transcriptional starts of the early viral genes. Mol. Cell. Biol. **3**:1222–1234.
62. **Weislander, L.** 1979. A simple method to recover intact high molecular weight RNA and DNA after electrophoretic separation in low gelling temperature agarose gels. Anal. Biochem. **98**:305–310.
63. **Wigler, M., A. Pellicer, S. Silverstein, R. Axel, G. Urlaub, and L. Chasin.** 1979. DNA mediated transfer of the adenine phosphoribosyl transferase gene locus into mammalian cells. Proc. Natl. Acad. Sci. U.S.A. **76**:1373–1376.