US 20020023053A1

(19) United States

(12) Patent Application Publication (10) Pub. No.: US 2002/0023053 A1

Szoc et al. (43) Pub. Date: Feb. 21, 2002

(54) SYSTEM, METHOD AND APPARATUS FOR INTERNATIONAL FINANCIAL TRANSACTIONS

(76) Inventors: **Ronald Z. Szoc**, Washington, DC (US); **Radomir Zamurovic**, Potomac, MD (US); **Jim Lesure**, Edgewater, MD (US); **Jeremy Shanahan**, Annandale, VA (US)

Correspondence Address:
HOWREY SIMON ARNOLD & WHITE LLP
BOX 34
1299 PENNSYLVANIA AVENUE NW
WASHINGTON, DC 20004 (US)

(21) Appl. No.: **09/825,366**

(22) Filed: **Apr. 4, 2001**

Related U.S. Application Data

(63) Non-provisional of provisional application No. 60/194,587, filed on Apr. 5, 2000.

Publication Classification

(51) **Int. Cl.**[7] **G06F 17/60**

(52) **U.S. Cl.** **705/39**

(57) **ABSTRACT**

An apparatus, system and method for providing real-time foreign exchange information, cross-border payments, and other financial information and services to clients over the World Wide Web. Real-time foreign exchange rate quotes are provided that may be relied on in timing international transactions to a benefit of a consumer. Single or multiple transactions are automatically converted from a consumer's native currency to any of a plurality of foreign currencies and vice versa, thereby simplifying and facilitating these international transactions.

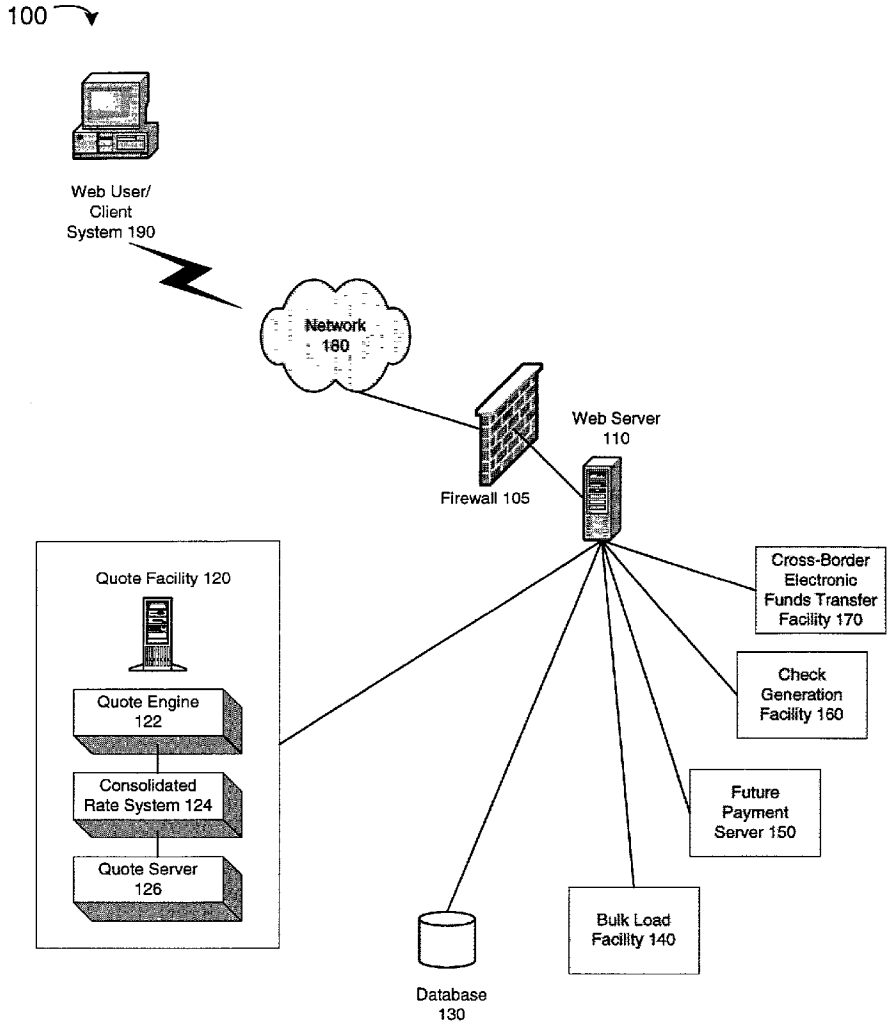

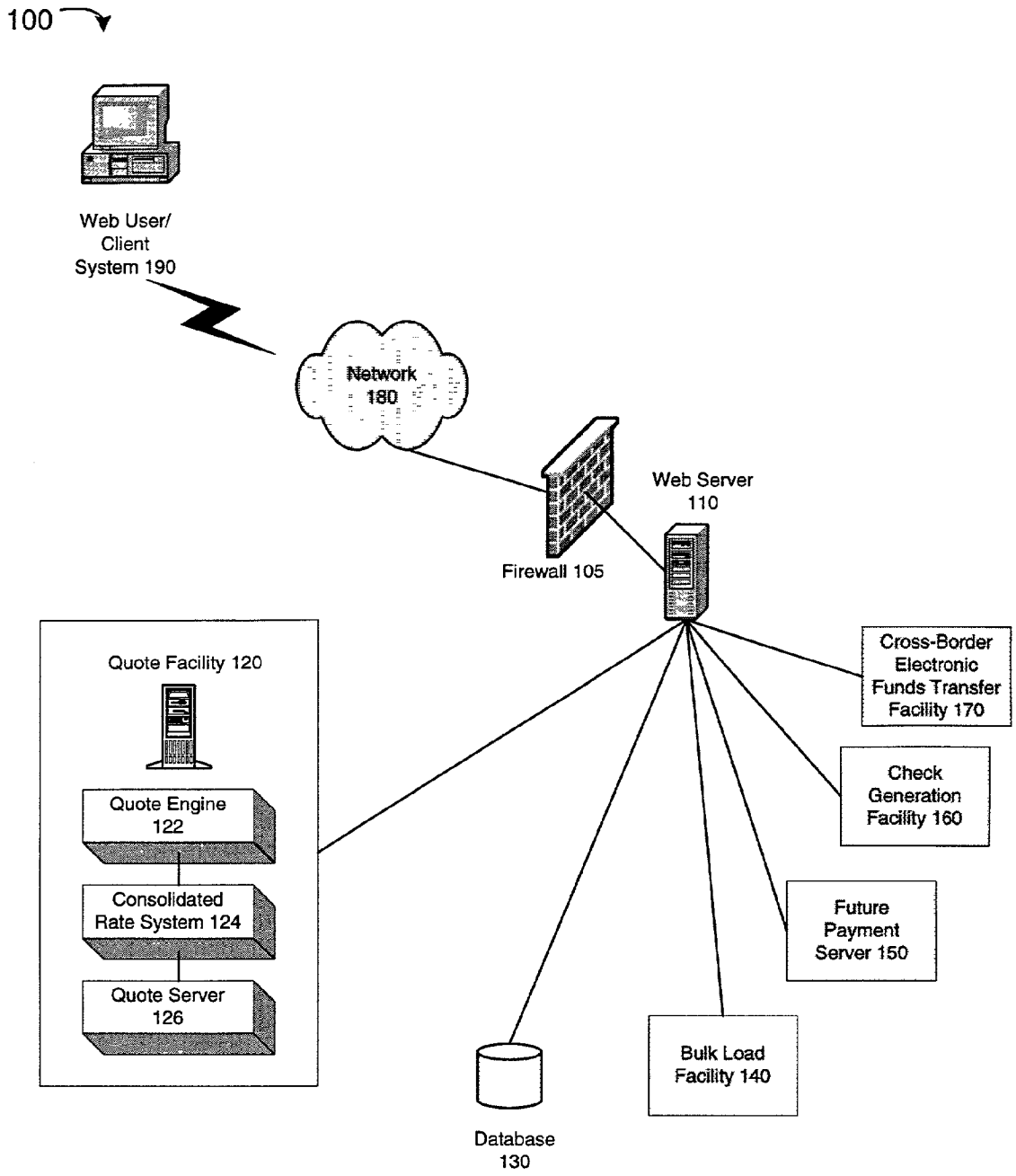
100
Web User/
Client
System 190
Network
180
Firewall 105
Web Server
110
Quote Facility 120
Quote Engine
122
Consolidated
Rate System 124
Quote Server
126
Cross-Border
Electronic
Funds Transfer
Facility 170
Check
Generation
Facility 160
Future
Payment
Server 150
Bulk Load
Facility 140
Database
130

Figure 1

200

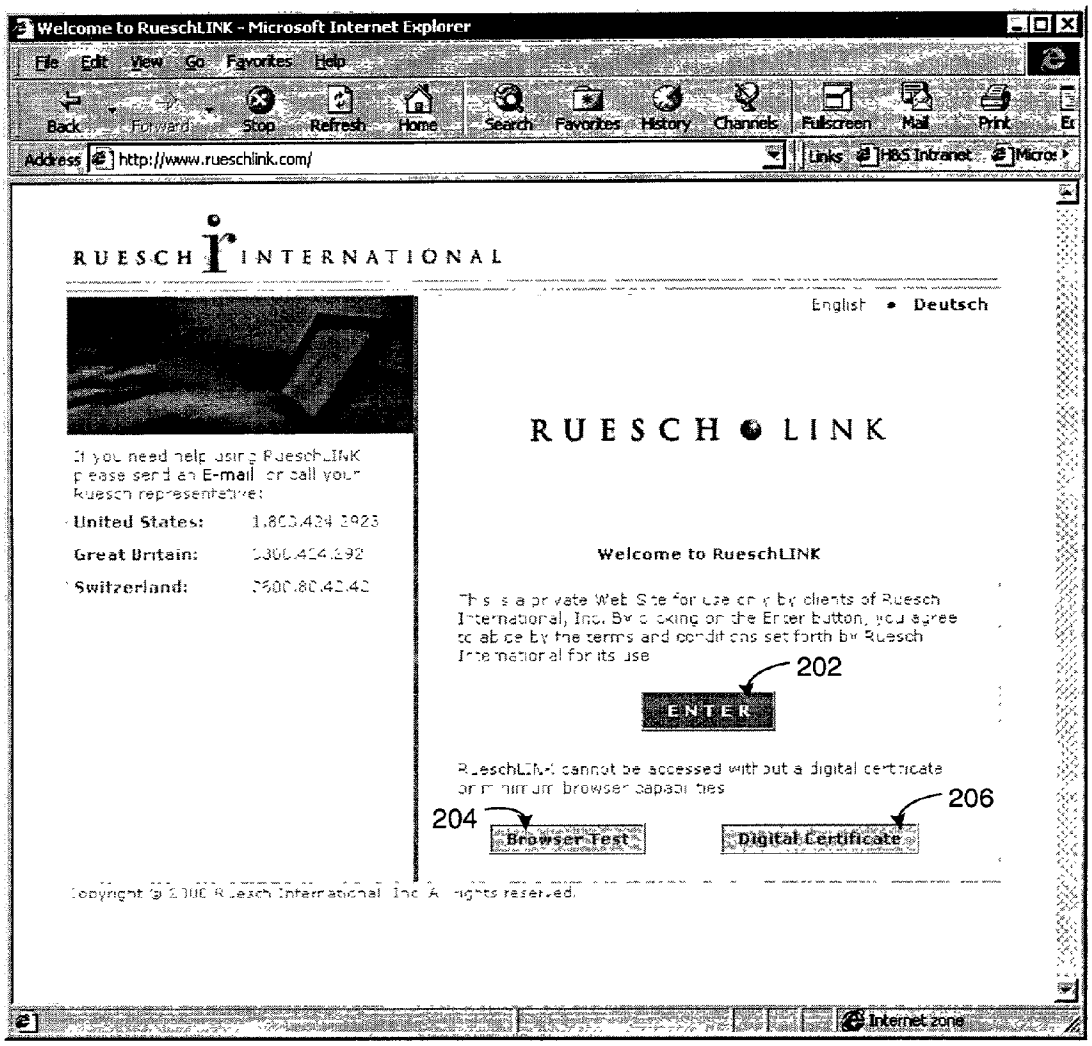
Welcome to RueschLINK - Microsoft Internet Explorer
File Edit View Go Favorites Help
Back Forward Stop Refresh Home Search Favorites History Channels Fullscreen Mail Print
Address http://www.rueschlink.com/
Links H&S Intranet
RUESCH INTERNATIONAL
English • Deutsch
RUESCH LINK
Welcome to RueschLINK
United States:
Great Britain:
Switzerland:
ENTER
202
204
206
Browser Test
Digital Certificate
Internet zone

Figure 2

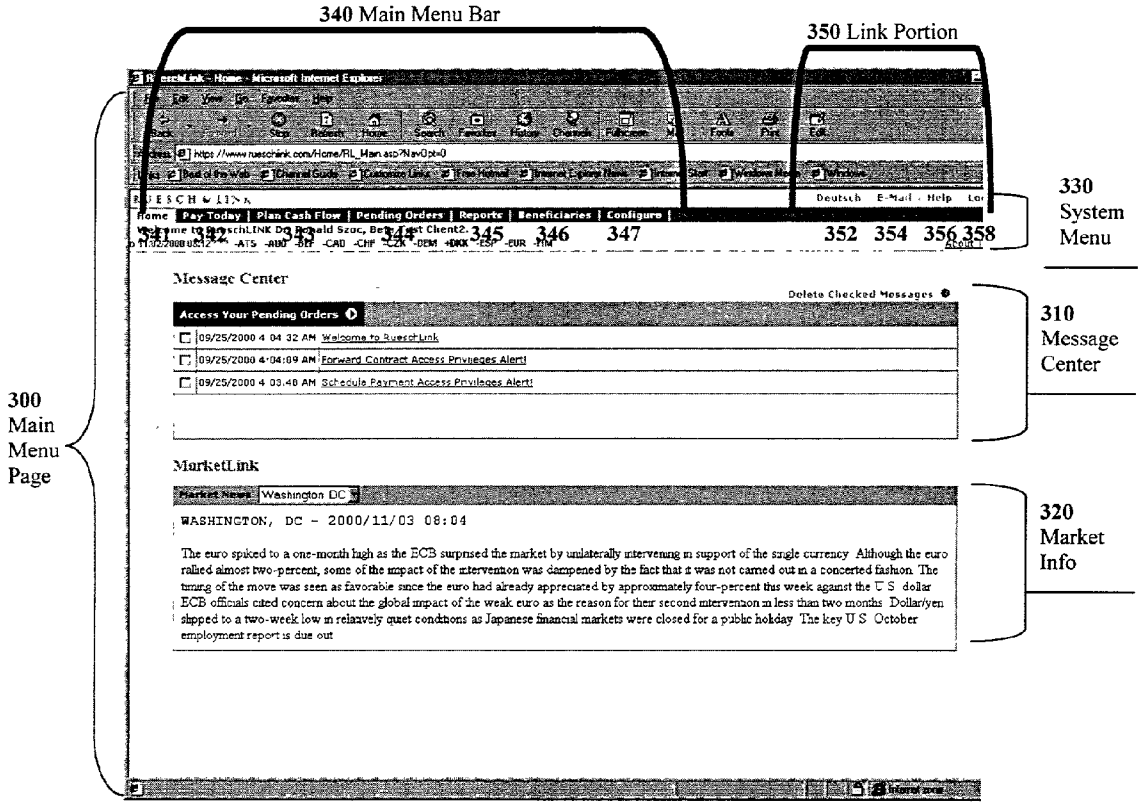
340 Main Menu Bar
350 Link Portion
330 System Menu
310 Message Center
320 Market Info
300 Main Menu Page
Home | Pay Today | Plan Cash Flow | Pending Orders | Reports | Beneficiaries | Configure
Deutsch E-Mail Help
Message Center
Delete Checked Messages
Access Your Pending Orders
09/25/2000 4 04 32 AM Welcome to RueschLink
09/25/2000 4:04:09 AM Forward Contract Access Privileges Alert!
09/25/2000 4 03.40 AM Schedule Payment Access Privileges Alert!
MarketLink
Market News Washington DC
WASHINGTON, DC - 2000/11/03 08:04
The euro spiked to a one-month high as the ECB surprised the market by unilaterally intervening in support of the single currency Although the euro rallied almost two-percent, some of the impact of the intervention was dampened by the fact that it was not carried out in a concerted fashion The timing of the move was seen as favorable since the euro had already appreciated by approximately four-percent this week against the U S dollar ECB officials cited concern about the global impact of the weak euro as the reason for their second intervention in less than two months Dollar/yen slipped to a two-week low in relatively quiet conditions as Japanese financial markets were closed for a public holiday The key U S October employment report is due out

FIGURE 3

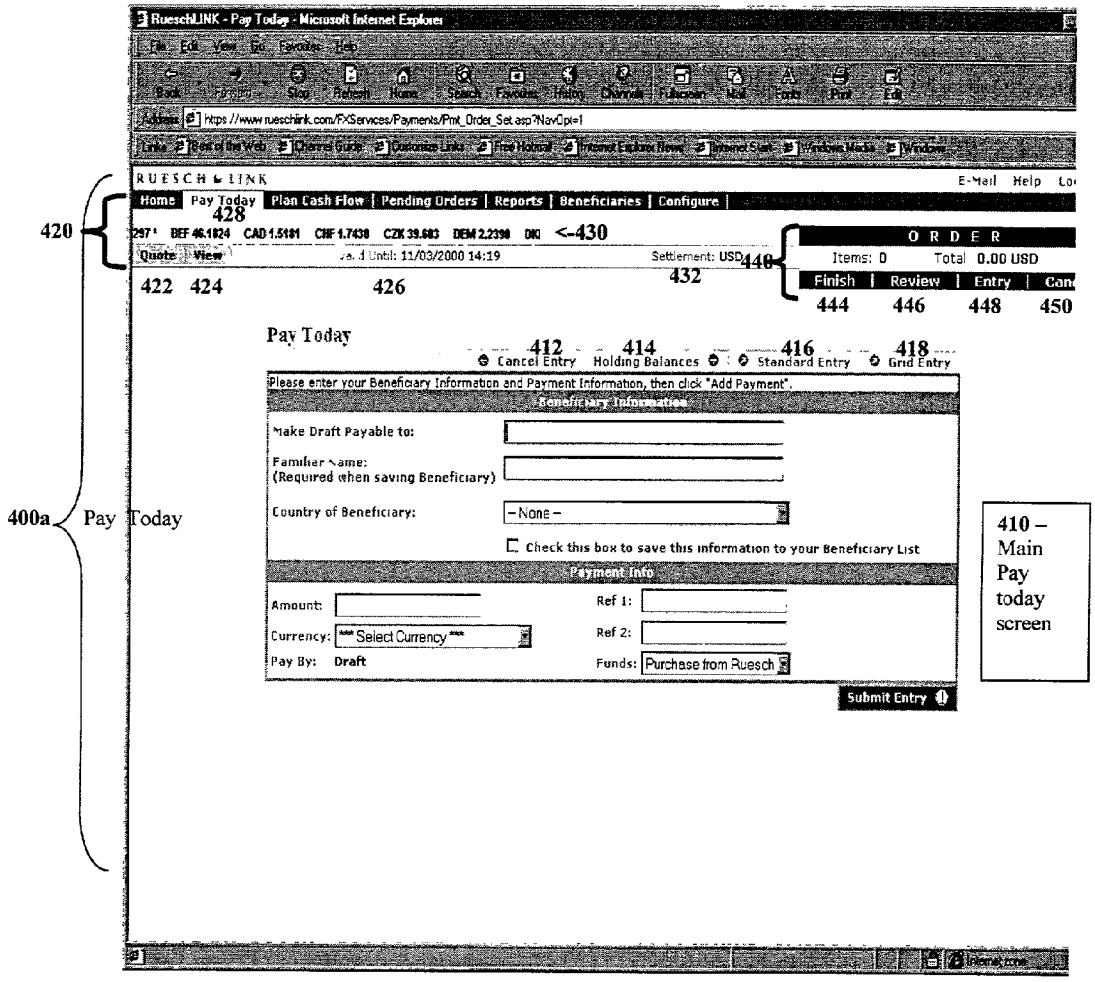
RueschLINK - Pay Today - Microsoft Internet Explorer
RUESCH LINK
E-Mail Help
Home
Pay Today
Plan Cash Flow
Pending Orders
Reports
Beneficiaries
Configure
428
420
<-430
Quote View
Settlement: USD
440
432
422 424
426
ORDER
Items: 0 Total 0.00 USD
Finish Review Entry
444 446 448 450
Pay Today
412 414 416 418
Cancel Entry
Holding Balances
Standard Entry
Grid Entry
Please enter your Beneficiary Information and Payment Information, then click "Add Payment".
Make Draft Payable to:
Familiar Name:
(Required when saving Beneficiary)
Country of Beneficiary:
-None-
Check this box to save this information to your Beneficiary List
Payment Info
Amount:
Currency:
Select Currency
Pay By: Draft
Ref 1:
Ref 2:
Funds:
Purchase from Ruesch
Submit Entry
400a
Pay Today
410 – Main Pay today screen

FIGURE 4A

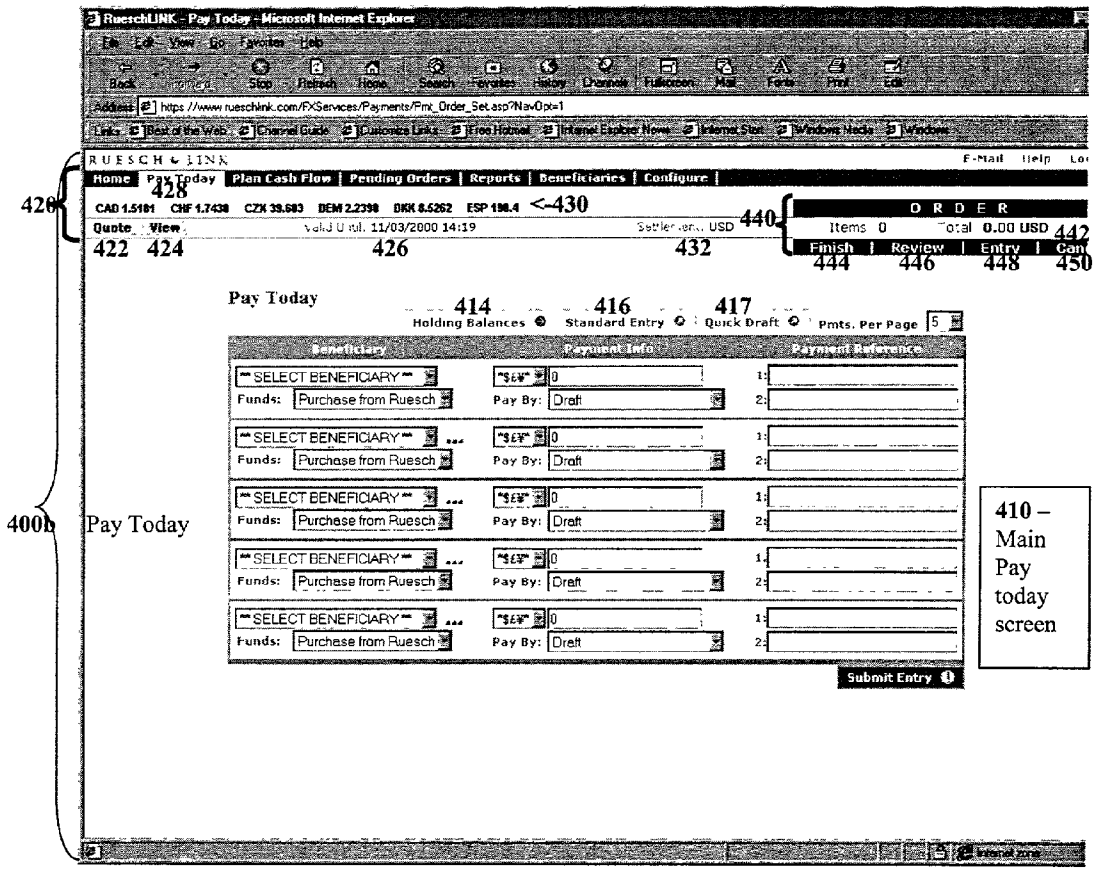
RueschLINK - Pay Today - Microsoft Internet Explorer
RUESCHLINK
Home
Pay Today
Plan Cash Flow
Pending Orders
Reports
Beneficiaries
Configure
428
420
CAD 1.5181 CHF 1.7438 CZK 39.683 DEM 2.2398 DKK 8.5262 ESP 198.4
<-430
Quote View
Valid Until 11/03/2000 14:19
Settlement USD
440
ORDER
Items 0
Total 0.00 USD
442
Finish | Review | Entry | Cancel
422 424 426 432 444 446 448 450
Pay Today
414 416 417
Holding Balances
Standard Entry
Quick Draft
Pmts. Per Page 5
Beneficiary
Payment Info
Payment Reference
SELECT BENEFICIARY
Funds: Purchase from Ruesch
Pay By: Draft
Submit Entry
400b
Pay Today
410 – Main Pay today screen

FIGURE 4B

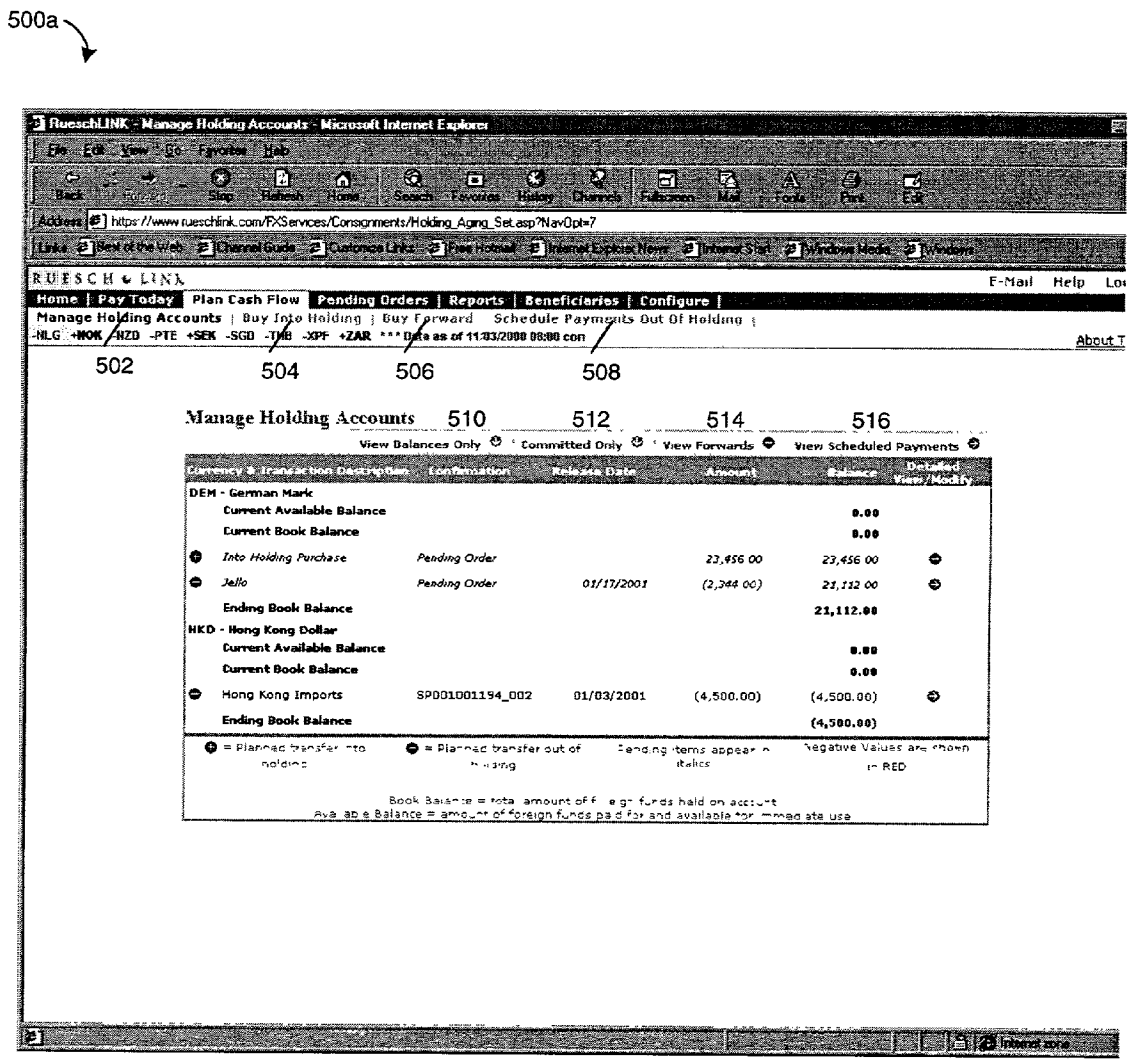
500a
RueschLINK - Manage Holding Accounts - Microsoft Internet Explorer
Address https://www.rueschlink.com/FXServices/Consignments/Holding_Aging_Set.asp?NavOpt=7
RUESCH LINK
E-Mail Help
Home | Pay Today | Plan Cash Flow | Pending Orders | Reports | Beneficiaries | Configure |
Manage Holding Accounts | Buy Into Holding | Buy Forward Schedule Payments Out Of Holding |
-NLG +NOK -NZD -PTE +SEK -SGD -TMB -XPF +ZAR *** Data as of 11/03/2000 08:00 con
About T
502
504
506
508
Manage Holding Accounts
510
512
514
516
View Balances Only
Committed Only
View Forwards
View Scheduled Payments
Currency & Transaction Description
Confirmation
Release Date
Amount
Balance
Detailed View/Modify
DEM - German Mark
Current Available Balance 0.00
Current Book Balance 0.00
Into Holding Purchase Pending Order 23,456 00 23,456 00
Jello Pending Order 01/17/2001 (2,344 00) 21,112 00
Ending Book Balance 21,112.00
HKD - Hong Kong Dollar
Current Available Balance 0.00
Current Book Balance 0.00
Hong Kong Imports SP001001194_002 01/03/2001 (4,500.00) (4,500.00)
Ending Book Balance (4,500.00)
= Planned transfer into holding
= Planned transfer out of holding
Pending items appear in italics
Negative Values are shown in RED
Book Balance = total amount of foreign funds held on account
Available Balance = amount of foreign funds paid for and available for immediate use
Internet zone

FIGURE 5A

500b

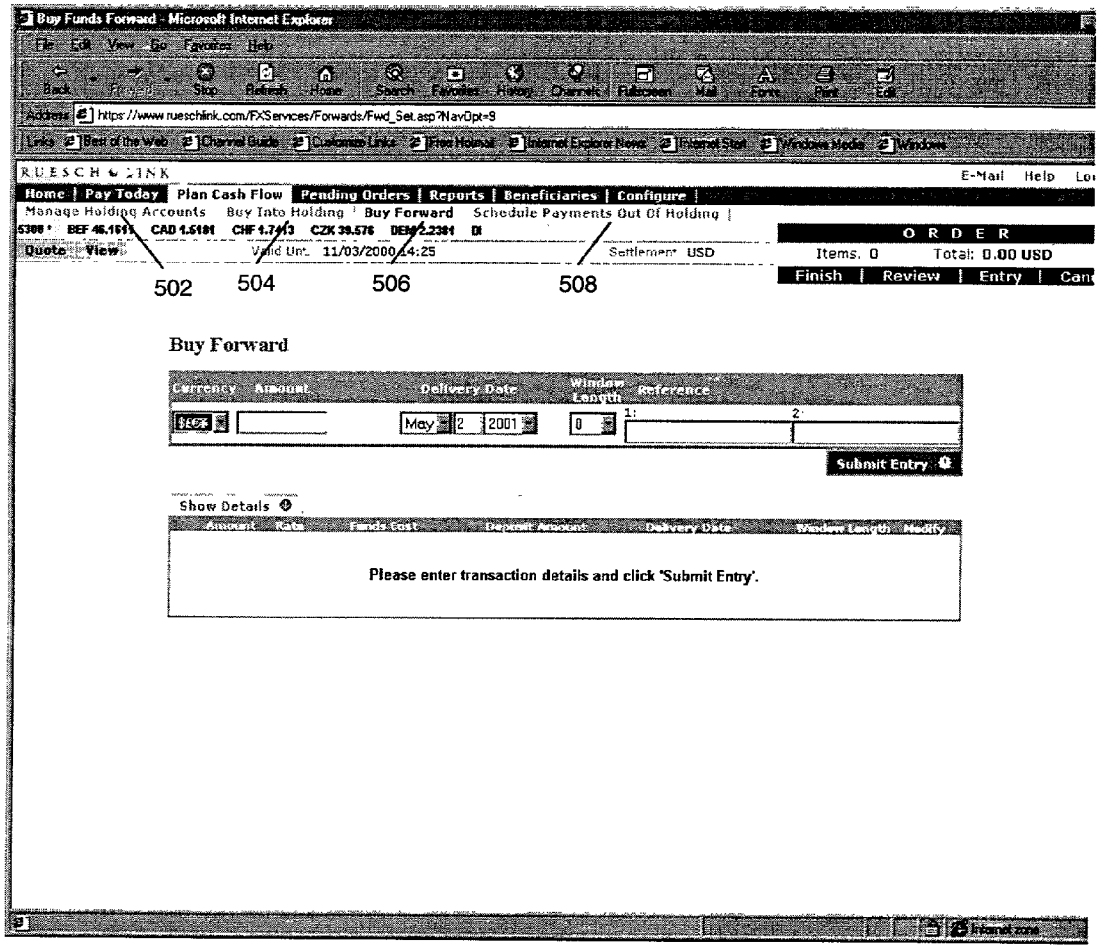

FIGURE 5B

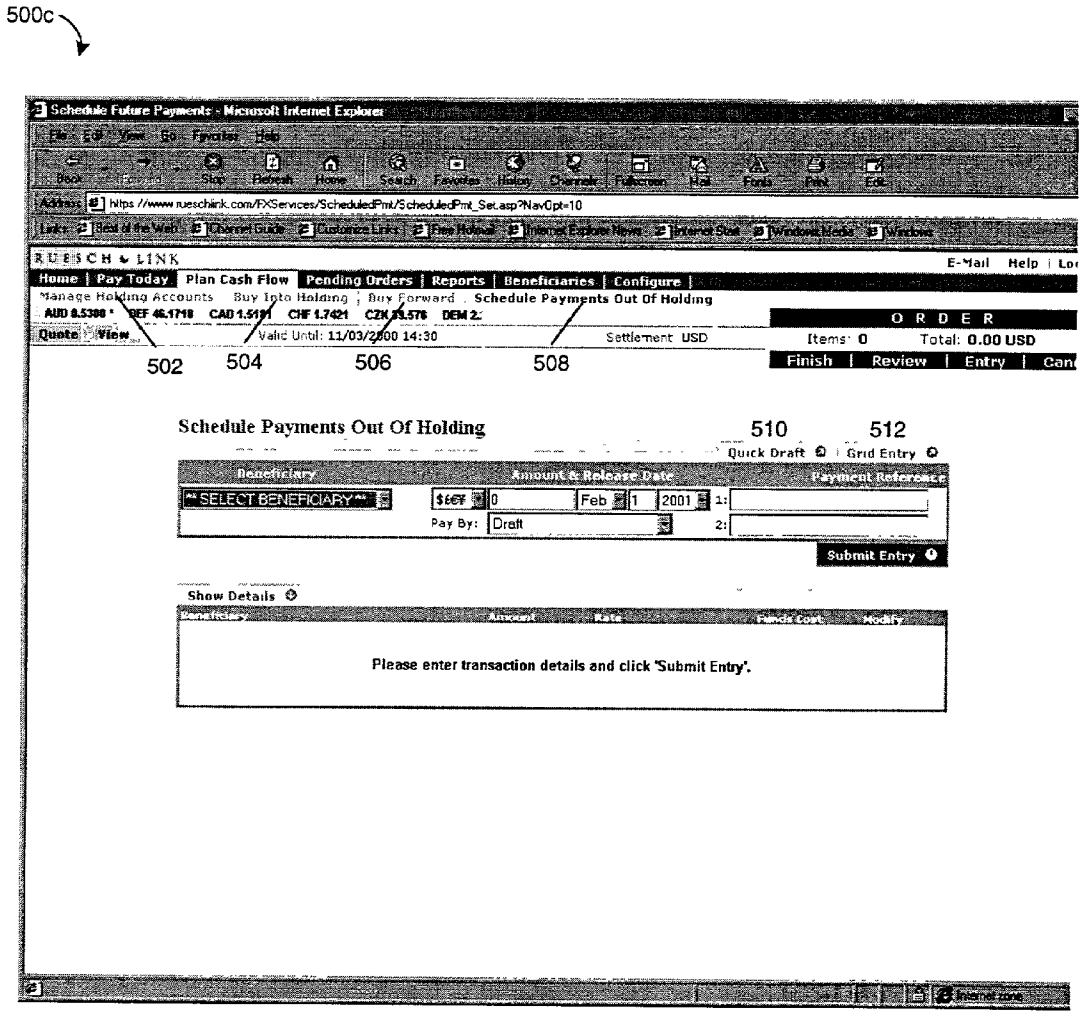
500c
Schedule Future Payments - Microsoft Internet Explorer
RUESCH LINK
Home | Pay Today | Plan Cash Flow | Pending Orders | Reports | Beneficiaries | Configure
Manage Holding Accounts Buy Into Holding Buy Forward Schedule Payments Out Of Holding
Quote View
Valid Until: 11/03/2000 14:30
Settlement USD
ORDER
Items: 0 Total: 0.00 USD
Finish | Review | Entry
502
504
506
508
Schedule Payments Out Of Holding
510
512
Quick Draft | Grid Entry
Beneficiary
Amount & Release Date
Payment Reference
SELECT BENEFICIARY
Feb
2001
Pay By: Draft
Submit Entry
Show Details
Please enter transaction details and click 'Submit Entry'.

FIGURE 5C

600

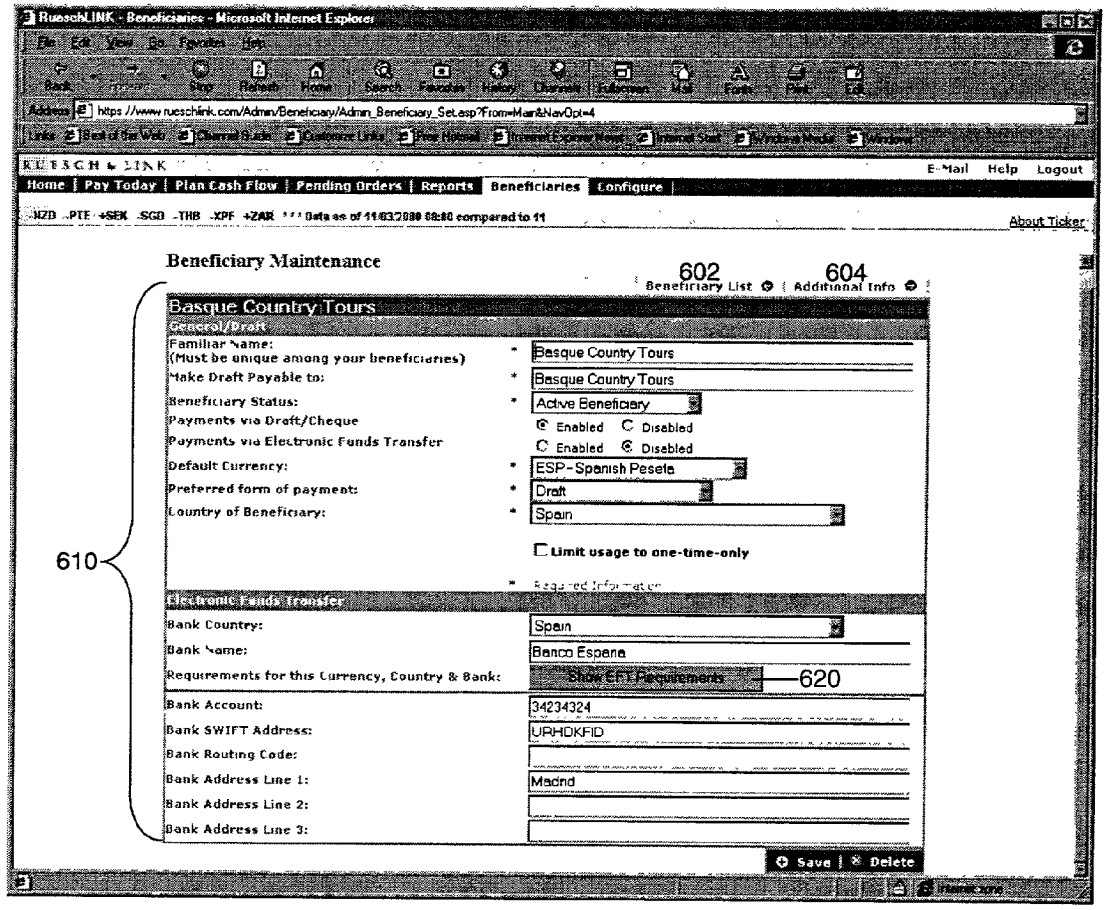
RueschLINK - Beneficiaries - Microsoft Internet Explorer
RUESCH LINK
E-Mail Help Logout
Home | Pay Today | Plan Cash Flow | Pending Orders | Reports | Beneficiaries | Configure
About Ticker
Beneficiary Maintenance
602
Beneficiary List
604
Additional Info
Basque Country Tours
General/Draft
Familiar Name:
(Must be unique among your beneficiaries)
Basque Country Tours
Make Draft Payable to:
Basque Country Tours
Beneficiary Status:
Active Beneficiary
Payments via Draft/Cheque
Enabled Disabled
Payments via Electronic Funds Transfer
Enabled Disabled
Default Currency:
ESP-Spanish Pesete
Preferred form of payment:
Draft
Country of Beneficiary:
Spain
Limit usage to one-time-only
610
Electronic Funds Transfer
Bank Country:
Spain
Bank Name:
Banco Espana
Requirements for this Currency, Country & Bank:
Show EFT Requirements
620
Bank Account:
34234324
Bank SWIFT Address:
URHDKFID
Bank Routing Code:
Bank Address Line 1:
Madrid
Bank Address Line 2:
Bank Address Line 3:
Save
Delete

FIGURE 6

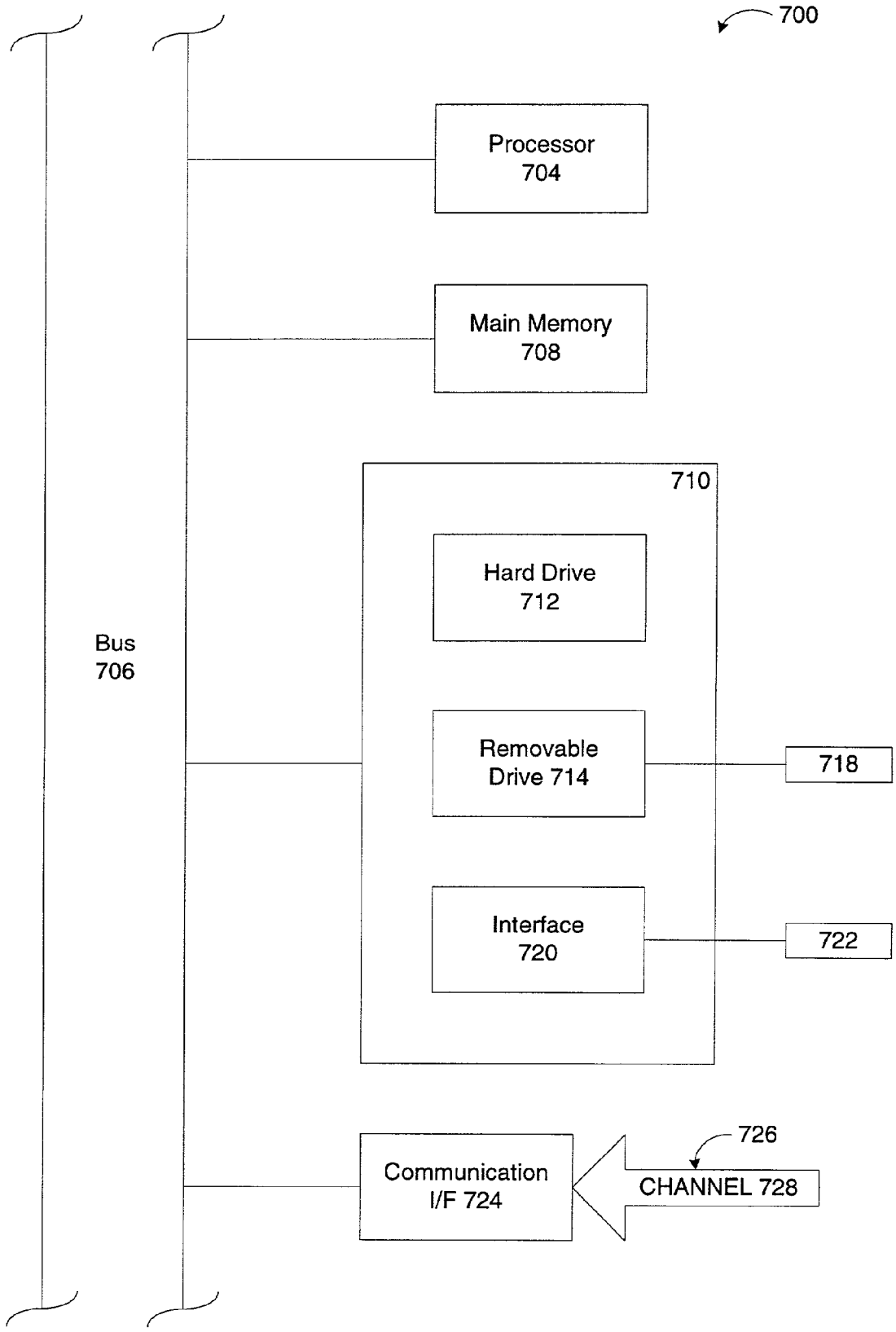
700
Processor
704
Main Memory
708
710
Hard Drive
712
Bus
706
Removable
Drive 714
718
Interface
720
722
726
Communication
I/F 724
CHANNEL 728

Figure 7

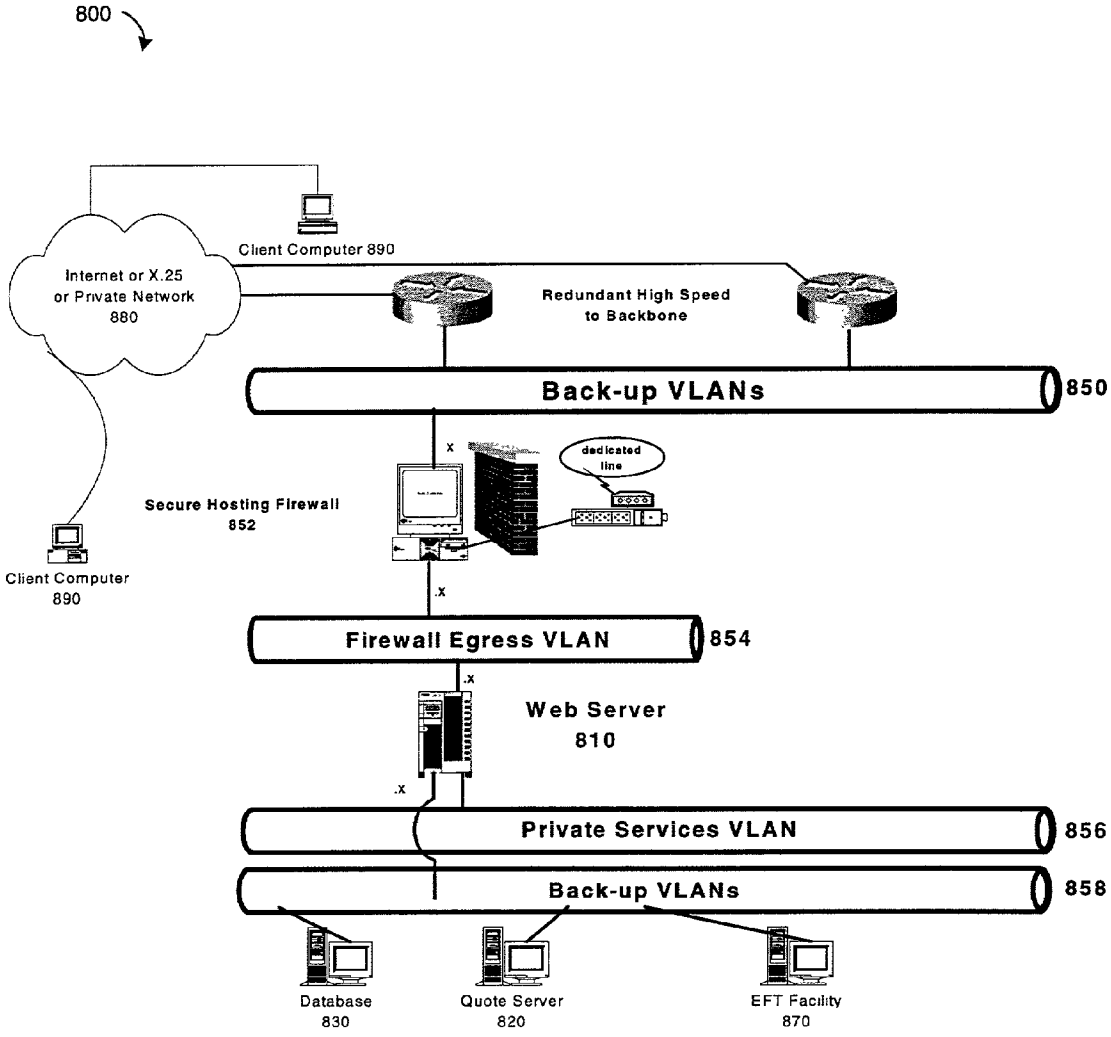
800
Client Computer 890
Internet or X.25
or Private Network
880
Redundant High Speed
to Backbone
Back-up VLANs
850
dedicated
line
Secure Hosting Firewall
852
Client Computer
890
Firewall Egress VLAN
854
Web Server
810
Private Services VLAN
856
Back-up VLANs
858
Database
830
Quote Server
820
EFT Facility
870

FIGURE 8

SYSTEM, METHOD AND APPARATUS FOR INTERNATIONAL FINANCIAL TRANSACTIONS

RELATED APPLICATIONS

[0001] This application claims the benefit of U.S. Provisional Application No. 60/194,587, entitled System for International Financial Transactions, filed on Apr. 5, 2000.

BACKGROUND OF THE INVENTION

[0002] 1. Copyright

[0003] A portion of the disclosure of this patent document contains material that is subject to copyright protection. The copyright owner has no objection to the facsimile reproduction by anyone of the patent document or the patent disclosure, as it appears in the Patent and Trademark Office patent file or records, but otherwise reserves all copyright rights whatsoever.

[0004] 2. Field of the Invention

[0005] The present invention relates generally to a system for offering information and conducting transactions over a network. More specifically, the present invention relates to an apparatus, system and method for providing real-time foreign exchange rate quotes, cross-border payments, and other financial information and services to clients over the Internet and World Wide Web.

[0006] 3. Related Art

[0007] In recent years, the global expansion of such public computer networks as the Internet and associated World Wide Web has linked together individuals and corporate entities from all over the globe. With this expansion, international electronic commerce (e-commerce) has become commonplace. Web users are now able to access not only a wealth of information on a great range of topics, but also to buy, sell and trade products and services in an almost endless variety of industries.

[0008] One industry that has taken advantage of the expansion of the Internet is the financial services industry. Internet users can currently conduct online virtually any personal financial transaction that was traditionally conducted solely in brick and mortar banking facilities. On the international front, web users can wire funds to foreign countries, transact with foreign merchants, and a plurality of other personal and commercial activities.

[0009] While the global nature of today's Internet has greatly facilitated electronic transactions, certain international barriers must still be overcome in order to render the Internet a fully effective vehicle for international finance. Of predominant significance is the fact that different nations and regions use many different forms of currency. To complicate matters, because of various international market factors, it is common for a value of each form of currency to be constantly changing with respect to values of other forms of currency. Hence, the concept of foreign exchange rates, which are measures of the respective values of currencies. The volatile nature of exchange rates has been an impediment to what could otherwise be straightforward international transactions. Exchange rate volatility introduces financial risk and uncertainty, which can have large negative consequences to parties involved in a cross-border or international transaction. This risk is absent in transactions in which the currencies of parties to the transaction are the same. In short, the element of risk makes international transactions fundamentally different from other types of transactions.

[0010] Systems are known which consider foreign exchange rates to facilitate international transactions. Unfortunately, each of these systems suffers certain drawbacks. For example, one known system discloses an arrangement for approving a multi-currency transaction between a consumer and a merchant over a network. The system compares an amount a consumer is willing to pay in a first currency with an amount a merchant demands in a second currency. Based on the comparison, the system determines if an exchange rate risk associated with the transaction is within a range acceptable to the system. If so, the transaction will be approved, the amount in the first currency will be received from the consumer by the system, and the amount in the second currency will be paid to the merchant. Once approved, the transaction is fixed with respect to the consumer and merchant, while the risk of loss from further exchange rate changes is assumed by an operator of the system within certain limits.

[0011] However, because this known system decides whether or not to approve the transaction, the system acts as a third party to the transaction, and the system is in position to take advantage of favorable changes in exchange rate. For example, the system may elect to only approve transactions where, because of an increase in value of a consumer's currency with respect to a merchant's currency, the transaction may be completed without exhausting the agreed-upon amount to be paid by the consumer. The consumer will be deprived of the excess while the operator of the system benefits.

[0012] As can be readily appreciated, the above-described system suffers numerous drawbacks in brokering transactions between international entities. To encourage use of financial systems on the Internet, it would be desirable to provide a system that allows consumers to benefit from the timing of their own transactions, without interference of a third party, and without having to manage the risk themselves. The elements of risk and uncertainty would preferably be removed. What is needed is a system through which consumers may receive real-time foreign exchange rate quotes and be able to rely on the same for a period of time, thereby allowing the consumers to control the timing of their international transactions to their benefit. What is needed is system to remove price and conversion uncertainties by displaying prices that may be relied on by consumers. Such a superior and novel system, as is described herein, would preferably remove risk and uncertainty from such transacting parties as buyers and sellers and consumers and vendors.

SUMMARY OF THE INVENTION

[0013] The present invention relates to an apparatus, system and method for providing real-time foreign exchange rate quotes, cross-border payments, and other financial information and services to clients over a network such as the Internet.

[0014] In one aspect, the present invention provides a method and associated apparatus for providing a foreign exchange rate quote to a client over a public network. The method includes obtaining a current rate from a quote

source, accessing secondary information and calculating a modified rate quote based on the current rate and the accessed secondary information. The modified rate quote may then be provided to the client.

[0015] In another aspect, a method and associated apparatus for generating a draft conforming to requirements of any of a plurality of financial centers are provided. The method includes receiving from a financial center a sample draft. From the sample draft, a set of draft requirements is determined. The method further includes electronically storing the set of draft requirements and producing a draft based on the stored set of draft requirements.

[0016] In yet another aspect, the present invention provides a method and associated apparatus for scheduling international transactions for a client. The method includes transmitting real-time foreign exchange rate information to the client and receiving an order for a plurality of transactions to be conducted in a plurality of currencies. This plurality of transactions may be based on the transmitted foreign exchange rate information. The method further includes scheduling execution of at least one of the plurality of transactions and arranging for billing the client upon execution of the at least one of the plurality of transactions in a native currency of the client. Preferably, scheduled transaction or transactions are to be executed with respect to any of a number of beneficiaries previously designated by the client.

[0017] Features and Advantages

[0018] One feature of the present invention is that it provides real-time foreign exchange rate quotes that may be relied upon by consumers for a predetermined period of time. In one embodiment, quotes derived from spot rates are provided. In another embodiment, forward rate quotes are provided. In yet another embodiment, forward rate quotes in the form of rate 'points' are provided. Preferably, forward rate quotes are provided as quotes or rate at an option of a client or potential client. The above features remove price and currency conversion uncertainties, thereby allowing consumers to time international financial transactions to their benefit.

[0019] Another feature of the present invention is its passive nature, which allows consumers to conduct financial transactions without interference from a system of the present invention, and to maintain full control over their own accounts.

[0020] Yet another feature of the present invention provides for issuance of a payment instrument from funds in a consumer's account.

[0021] Still yet another feature of the present invention de-couples the act of issuing a payment instrument from acquiring funds to be used in payment.

[0022] Further features and advantages will become apparent following review of the detailed description set forth below.

BRIEF DESCRIPTION OF THE FIGURES

[0023] The present invention is described with reference to the accompanying drawings. In the drawings, like reference numbers indicate identical or functionally similar elements.

[0024] **FIG. 1** illustrates a block diagram of an embodiment of a system of the present invention;

[0025] **FIG. 2** illustrates an embodiment of a homepage for a system of the present invention;

[0026] **FIG. 3** illustrates an embodiment of a main menu page including a main menu bar for a system of the present invention;

[0027] **FIGS. 4A and 4B** illustrate alternative embodiments of pay today pages for a system of the present invention;

[0028] **FIGS. 5A, 5B** and **5**C illustrate various embodiments of cash flow pages for a system of the present invention;

[0029] **FIG. 6** illustrates an embodiment of a beneficiary maintenance page for a system of the present invention;

[0030] **FIG. 7** illustrates an embodiment of a computer system suitable for use in implementing the present invention; and

[0031] **FIG. 8** illustrates an embodiment of a network suitable for use in implementing the present invention.

DETAILED DESCRIPTION OF THE PREFERRED EMBODIMENTS

[0032] Overview

[0033] The present invention is an improved apparatus, system and method for providing real-time exchange rate quotes to clients and brokering international transactions for clients relying on the quotes. In providing the rate quotes, the system preferably considers various factors specific to a client as well as the client's desired transaction.

[0034] An apparatus, system and method of the present invention are preferably implemented on a network, such as the Internet. The network may be public, or may be a private intranet or limited-access extranet, for example. Regardless, the following discussion is intended to provide general background information with regard to network-related technology, to define and/or to provide clarity to various terms used in the present invention, and to provide a description of various hardware and software tools that may be used to implement the present invention. Any reference to products is made for exemplary and/or explanatory purposes only. The breadth and scope of the present invention should not be limited by any of the exemplary products or definitions disclosed herein.

[0035] The Internet is generally defined as a collection of processing systems and/or networks that are themselves globally networked together. The World Wide Web is generally defined by all of the resources and users on the Internet that are using Hypertext Markup Language (HTML) as the authoring language and Hypertext Transport Protocol (HTTP) and other related protocols as the transport protocol. The systems and networks of the global network are connected via any of a number of protocols, such as the TCP/IP (Transmission Control Protocol/Internet Protocol).

[0036] TCP/IP is the basic communication language or protocol of the Internet. This and other related protocols provide for file transfer, remote log-in, electronic mail, and other services, including distributed processing, as well as

other resources. In addition TCP/IP enables an IP data packet from a source node, such as a processing system, to traverse multiple networks on its way to a final destination node without first establishing a virtual circuit or 'connection.' When a computer is set up with direct access to the Internet, the computer is enabled for is TCP/IP services just as every other computer that messages are sent to, or information is received from, also has a copy of TCP/IP.

[0037] HTML is the set of 'markup' symbols or codes inserted in a file intended for display on a World Wide Web browser. The markup tells the web browser how to display a web page's words and images for the user. HTTP is the set of rules for exchanging files (text, graphic images, sound, video and other multimedia files) on the World Wide Web. Relative to the TCP/IP suite of protocols, HTTP is an application protocol. HTTP is typically designed to run primarily over TCP/IP and uses the standard Internet setup, where a server issues the data and a client machine or "client browse" displays the data. One format for information transfer is to create documents using HTML, which are preferably made up of standard text as well as formatting codes that indicate how the page should be displayed. The web client machine reads these codes in order to display the page. The hypertext conventions and related functions of the World Wide Web are described in the appendices of U.S. Pat. No. 5,715,314, the entirety of which is herein incorporated by reference.

[0038] HTTPS (HTTP Secure) is a web protocol developed by Netscape® and built into its browser that encrypts and decrypts user page requests as well as the pages that are returned by the web server. HTTPS uses Netscape's Secure Socket Layer (SSL) as a sublayer under its regular HTTP application layer. SSL can use, for example, a 40-bit or 128 bit key size for the stream encryption algorithm.

[0039] A Common Gateway Interface (CGI) is a small program written in a script language such as Pearl that functions as the glue between HTML pages and other programs on the web server. For example, a CGI script would allow search data entered on a web page to be sent to the DBMS (database management system). It would also format the results of that search onto an HTML page, which is sent back to the user.

[0040] A Uniform Resource Locator (URL) is the address of a file (resource) accessible on the Internet. The type of resource depends on the Internet application protocol. Using HTTP, the resource can be an HTML page, an image file, a program such as a CGI application or Java® applet, or any other file supported by HTTP. The URL contains the name of the protocol required to access the resource, a domain name that identifies a specific computer on the Internet and a hierarchical description of a file location on the computer. Additional descriptions of URLs can be found in the appendices to U.S. Pat. No. 5,715,314, and in U.S. Pat. No. 5,774,670, the entirety of which is herein incorporated by reference.

[0041] A browser system is a program that provides a way to look at, read and hear all the information on the World Wide Web. A browser typically interprets hypertext links, or simple 'links,' and allows the user to view sites and navigate from one Internet node to another. A brief overview of web browsers and their interactions within the World Wide Web, and the act of 'browsing,' which refers to browsing web sites on the World Wide Web, are set forth in U.S. Pat. No. 5,774,670. Browsing also refers to a process of moving between HTML pages of a single typical web site. These HTML web page files, or web pages, may include a 'homepage,' by which is meant a main page of a web site that typically names and describes the site, and provides links to other web pages or various features of the web site. Browsing is typically controlled by a Web user through 'clicking' on links to web sites or web pages. Clicking refers to a process of indicating a desired link by using a cursor control device, such as a mouse or roller ball.

[0042] A cookie is a special text file that a Web site puts on a hard disk or other memory device of a user machine accessing the web site so that it can remember something about the user at a later time. Typically, a cookie records a user's preferences when using a particular site. Using HTTP, each request for a Web page is independent of all other requests. For this reason, the Web page server has no memory of what pages it has sent to a user previously or anything about the user's previous visits. A cookie is a mechanism that allows the server to store its own file about a user on the user's own computer. The file is stored in a subdirectory of the browser directory. The cookie subdirectory will contain a cookie file for each Web site the user has been to that uses cookies. An exemplary specification for cookies can be found at http://www.netscape.com/newsref/std/cookie_spec.html, which is herein incorporated by reference in its entirety. A detailed description of cookies, and the storage of state information, is contained in U.S. Pat. No. 5,774,670.

[0043] In general computer usage, logon is the procedure used to get access to an operating system or application, usually in a remote computer. Generally, a logon procedure requires that the user have (1) a user ID and (2) a password. Often, the user ID must conform to a limited length such as eight characters and the password must contain at least one digit and not match a natural language word. The user ID can be freely known and is visible when entered at a keyboard or other input device. The password must be kept secret (and is not displayed as it is entered). A similar procedure, called registration, is required to enter some Web sites.

[0044] ActiveX Data Objects (ADO) is an application program interface (API) from Microsoft Corporation, Redmond, WA ("Microsoft") that lets programmers writing Windows®, a registered trademark of the Microsoft Corporation, Redmond, Wash., applications get access to relational and non-relational databases from both Microsoft and other database providers. For example, if it was desired to write a program that would provide users of a Web site with data from an IBM DB2 database or an Oracle database, an ADO program statements could be included in an HTML file that was identified as an Active Server Page (ASP). When a user requested the page from the Web site, the page sent back could include appropriate data from a database, obtained using ADO code.

[0045] Active X is a software module based on Microsoft's Component Object Model (COM) architecture. It enables a program to add functionality by calling ready-made components that blend in and appear as normal parts of the program. They are typically used to add user interface functions, such as 3-D toolbars, a notepad, calculator or even a spreadsheet.

[0046] An ActiveX control is a component program object that can be re-used by many application programs within a computer or among computers in a network. The technology for creating ActiveX controls is part of Microsoft's overall ActiveX set of technologies, chief of which is the Component Object Model (COM). ActiveX controls can be downloaded as small programs or animations for Web pages, but they can also be used for any commonly needed task by an application program in the latest Windows® and Macintosh®, a registered trademark of Apple Computer, Inc., Cupertino, Calif., environments.

[0047] An animated GIF is a graphic image on a Web page that moves, e.g. a twirling icon or a banner with a hand that waves or letters that get larger. In particular, an animated GIF is a file in the Graphics Interchange Format specified as GIF89a that contains within the single file a set of images that are presented in a specified order. An animated GIF can loop endlessly or it can present one or a few sequences and then stop the animation.

[0048] An Active Server Page is a Web page that contains programming code written in VB Script or Javascript. This code was developed by Microsoft starting with Version 3.0 of its Internet Information Server (IIS). When the IIS server encounters an Active Server page that is requested by the browser, it executes the embedded program. Active Server Pages are Microsoft's alternative to CGI scripts, which allow Web pages to interact with databases and other programs.

[0049] Client/server is an architecture in which the client machine (personal computer or workstation) is the requesting machine and the server is the supplying machine, both of which are connected via a local area network (LAN) or wide area network (WAN). Since the early 1990s, the client/server architecture has been used to build applications on LANs in contrast to centralized minicomputers and mainframes with dedicated terminals. The client machine contains the user interface and, in terms of the present invention, preferably performs none or very little of the application processing. A client machine may also be referred to herein as a "user machine" or "user." Servers can be high-speed microcomputers, minicomputers or even mainframes. A database server maintains the databases and processes requests from the client machine to extract data from, or update, the database. An application server may provide additional business processing for the client machine.

[0050] Encryption is the conversion of data into a form, called a cipher, that cannot be easily intercepted by unauthorized people. Decryption is the process of converting encrypted data back into its original form, so it can be understood. Typically, when an encrypted document arrives at its destination, the encrypted document is converted back to its original form through decryption. The readable document is generally referred to as a "decrypted" document. A basic introduction to encryption and decryption is described in the text written by Bruce Scheiner entitled "*Applied Cryptography: Protocols, Algorithms And Source Code in C,*" published by John Wiley & Sons, 1994, the entirety of which is hereby incorporated by reference. Moreover, more detailed descriptions of systems and apparatus for accomplishing encryption and decryption in computer networks are set forth in U.S. Pat. Nos. 5,903,652, 5,850,442, and 5,850,446, the entirety of each of which is hereby incorporated by reference.

[0051] International E-Commerce System, Apparatus and Method of the Present Invention

[0052] Referring first to **FIG. 1**, an embodiment of the present invention is illustrated as a system **100**. The system **100** includes a web server **110**, a quote facility **120**, a client database **130**, a bulk load facility **140**, a future payment server **150**, a check generation facility **160**, and a cross-border electronic funds transfer facility **170**. The web server **110** acts as an interface between the system **100** and a network **180**, preferably the Internet, and is preferably isolated from this network **180** by a firewall **105**. The web user/client system **190** is representative of a plurality of web users having access to the system **100** via the network **180**.

[0053] The quote facility **120** preferably includes a quote engine **122** having a quote server **126** and a consolidated rate system (CRS) **124**, as will be discussed in detail below.

[0054] The system **100** of the present invention is a network-based system, with the web server **110** preferably supporting a web site of the system **100**. While the system **100** may be implemented on any network, it is preferably implemented on a public network, such as the Internet.

[0055] As a preliminary matter, it is assumed for the purposes of this disclosure that the native currency of users of the system **100** of the present invention is the American dollar. All other currencies will therefore be referred as foreign currencies. Of course, the system **100** is adapted for use by web users having any native currency. In the system **100**, it is contemplated that, in addition to the native currency, accounts may be maintained by users of the system **100** in any freely traded foreign currency unit, including but not limited to the Austrian shilling, Australian dollar, Belgian franc, Canadian dollar, Swiss franc, Czech kroner, German mark (Deutschemark), Danish kroner, Spanish peseta, Euro, Finnish markka, Fiji dollar, French franc, British (Sterling) pound, Greek drachma, Hong Kong dollar, Indian rupee, Irish punt, Italian lire, Japanese yen, Korean won, Mexican peso, Dutch guilder, Norwegian kroner, New Taiwanese dollar, New Zealand dollar, Phillipine peso, Portuguese escudo, Saudi riyal, Swedish kronor, Singaporian dollar, Thai baht, Central Polynesian franc, South African rand, and others. In addition, any transactions discussed herein may also be carried out in any of the above or other currencies.

[0056] When a user of the Internet wishes to use any of the multiple other features of the system **100**, to conduct an international transaction, for example, the web user uses the web user system **190** to connect with the system **100**. As will be appreciated by those skilled in the art, the connection will preferably be established between the system **190** of the web user via a network browser installed thereon, and the web site supported by the web server **110**. Such a connection occurs when, at the web user's direction, the browser makes an HTTP request for an HTML web page from the web server **110**. In return, the web server **110** transmits an HTML web page, preferably a homepage, to the web user's system **190**. One embodiment of such a home page **200** is illustrated in **FIG. 2**. Preferably, before a web user is given full access to the web site of the system **100**, the web user will be

required to register with the system **100**. However, a web user who is already a client, that is, a registered member of the system **100**, may proceed immediately to a login process, which is discussed below.

[**0057**] Registration with the system **100** may occur in any of a variety of ways, including online registration, telephone, ground correspondence or other known methods may be used. In light of certain laws and/or governmental regulations, such as foreign asset control regulations, federal law directed against such activities as money laundering, and other constraints, registration conducted via ground correspondence and which includes due diligence, may be preferred, particular in a business-to-business environment. During a registration process, a variety of forms of information may be solicited from a web user, including such demographic information as name, ground address, e-mail address, etc., and financial information. A desired personal login name may also be solicited, or alternatively, be assigned automatically by the system **100**. Following any desired approval process implemented at the discretion of an operator of the system **100**, the web user will be issued a password and given 'client' status in the system **100**. Any client-specific information obtained during the registration process will preferably be stored in the client database **130**.

[**0058**] In one embodiment, the 'client' is a client company or other group entity. Thus, multiple users may be enabled for access by the system **100** for any one client. In such a case, an individual acting as an administrator for the client entity preferably has the authority to add, modify and delete that entity's users of the system, as well as to assign various permissions that permit varied access to functions of the system **100**.

[**0059**] Following connection with the system **100** of the present invention, a client may initiate a login process by clicking on 'enter' button **202**, illustrated on the home page **200** of **FIG. 2**. The client will then be queried for a login name and password. Note that, prior to logging in, the client may wish to determine the version of the network browser that the client's system is running in order to determine compatibility with the system **100** of the present invention. Thus, in one embodiment, the home page **200** is provided with a 'browser test' link or button **204**. This link preferably initiates a feature that tests an overall suitability of the client's hardware and software environment, thereby preventing the user from entering the site and potentially discovering problems later.

[**0060**] In addition, due to the financial nature of the present invention, the system **100** may also require a system **190** of the client to be authenticated, and to consequently be capable of secure communications. For example, in a preferred embodiment, a digital certificate is installed on the web server **110** in order to require encryption for secure communications via a Secure Sockets Layer (SSL) between the web server **110** and a system **190** of the client. For authentication of the client system **190**, a preferred embodiment of the present invention would also require the issuance of a client digital certificate to the client's system **190**. The server **110** may check this certificate to ensure that the client is valid, and that the certificate has not been revoked. In subsequent sessions, authentication of the digital certificate of the client's system **190** could occur at the time of login by the web server **110**. Thereafter, secure communications would occur between the client's system **190** and the web server **110** over the SSL with, for example, 128-bit encryption. This encryption provides a desired level of protection for communications such as credit card orders, electronic transfer instructions and other sensitive information. Digital certificates can be obtained from VeriSign, Inc. of Mountain View, Calif., whose web-based system is currently accessible at http://www.verisign.com, or from Baltimore Technologies, with U.S. headquarters in Boston, Mass., whose web-based system is currently accessible at http://ww.baltimore.com, among others. In a preferred embodiment, the system **100** of the present invention provides its own digital certificates, acting as both the Certificate Authority and the Registration Authority for digital certificates, as will be understood by one skilled in the art. For convenience, the home page **200** may be provided with a 'digital certificate' button **206**. Clicking on this button will preferably lead a client to a site for applying for a digital certificate.

[**0061**] The present invention preferably also allows for other methods for client and user authentication, including but not limited to: smart cards with embedded digital certificates, biometric hardware and software for authentication of such data as finger prints and retinal scan data. Multi-phase authentication, requiring two or more authentication methods, may also be used. For example, software digital certificates simultaneously coupled with retinal scanning hardware and software may be required.

[**0062**] Following authentication and verification of login and certification information, the client will be granted access to the system **100**. In a preferred embodiment, different clients will be granted varying degrees of access to the system **100**, depending on menu items and functionality, for example, that the particular client has been given permission to access. Preferably, the client will then be presented with a web site main page, or menu page, which provides links to numerous features available from the system **100**.

[**0063**] **FIG. 3** illustrates an embodiment of a main menu page **300** that preferably appears after a successful login and/or authentication by a client or user. In a preferred embodiment, the main menu page **300** is dynamically and specifically generated for the individual client based on the client's past and future (e.g. scheduled) behavior. In this embodiment, the main menu page **300** includes a message center **310**, which shows upcoming events about the client's account, among other information. Examples of these events may include beneficiary payment, purchase into holding, future payment, mature future payment, client forward sale, client forward purchase, mature forward, scheduled payment out of holding, order submitted and/or approved, A/R payment received, debited/credited funds, beneficiary changed and/or added, user added, scheduled payment release expected, forward contracts coming due for payment and delivery, and the like. Additionally, based on the particular client's preferences, the same main menu page **300** may include a market information portion **320** that includes foreign exchange market commentary tailored to a specific currency or country. Preferably, the client is able to choose which events trigger a message to be displayed. In another embodiment, the main menu page **300** is more than a reminder of upcoming events. For example, the page may suggest various foreign exchange risk management strate-

gies based on market volatility, suggest optimal funds replenishment strategies based on an analysis of the client's past actions, and so on.

[0064] As shown in **FIG. 3**, the main menu page **300** may also include a system menu **330** that includes a main menu bar **340** and a link portion **350**. The menu bar **340** preferably remains continually visible as a client navigates the various pages of the system **100**. In one embodiment, the main menu bar **340** remains visible as a header or a footer, for example, at a top or bottom portion, respectively, on a client's display as a body of the display changes from web page to web page. Any secondary menus that appear after a client chooses a main menu option preferably appear in a group immediately below that main menu item selected. These secondary menus may be context sensitive in that they change depending on a permission level or other characteristics of the client or user.

[0065] In a preferred embodiment of the main menu page **300**, the link portion **350** includes a language portion, shown as having a Deutsch link **352**, an e-mail link **354**, a help link **356** and a logout link **358**. This link portion **350** may thereby provide to the client one-click access to various features of the system **100**. Clicking on the log-out link **358** preferably terminates a connection between a system **190** of the client and the system **100** of the present invention. For security reasons, it is preferable, once a client logs out, that the system **190** of the client be allowed no further access to the system **100** unless the login and certification processes discussed above are repeated. For the same reason, the system **100** preferably has a time-out feature that automatically logs a client out after a predetermined period of web site inactivity.

[0066] Clicking on the e-mail link **354** may initiate a default e-mail program on the client's system. A new outgoing message, addressed to an operator or other administrative member of the system **100**, will preferably be automatically generated, thereby allowing the client to quickly and easily contact the system **100** by e-mail. The help link **356** preferably links the client to a help page, which may include a list of frequently asked questions and/or other information to assist a client in the use of a web site of the present invention. Additional links providing for additional features may also be provided if desired.

[0067] As noted above, the link portion **350** further includes the Deutsch link **352**, which allows the user to select a preferred language. In one embodiment, each screen page shown to the user is constructed dynamically in order to take into account the language preference. Language elements, whether as text, or as graphics, are stored in a "language element" database table, and are dynamically placed on the HTML or ASP page based on the current language "mode" that is in effect. This provides several advantages to the user as well as to developers of such systems as that of the present invention. First, by decoupling the language elements from the HTML pages themselves, additional languages can be added to the system **100** of the present invention with minimal effort. In addition, by dynamically creating the page to be shown to the user, the language can be changed "on the fly" in the middle of a client's session with no loss of information, functionality, or interactive content that the client has supplied. As illustrated, the language portion **350** includes only the Deutsch link **352**, but may further include links allowing a client to select as a language preference any other language.

[0068] The main menu bar **340** also preferably provides links to various features of the system **100**. As illustrated, the main menu bar **340** in this embodiment includes a home link **341**, a pay today link **342**, a plan cash flow link **343**, a pending orders link **344**, a reports link **345**, a beneficiaries link **346** and a configure link **347**. Clicking on the home link **341** from any web page of the system **100** may return a user to the home page **200**, the main menu page **300**, or any other designated page. Designation of a "home" page may be by an administrator of the system **100**, or may be left to the discretion of individual users. Clicking on the pay today link **342** preferably leads a user or client to a pay today page. Embodiments of pay today pages **400***a* and **400***b* are illustrated in **FIGS. 4A and 4B** and will be further discussed below.

[0069] Likewise, clicking on the plan cash flow link **343** preferably directs a client to a cash flow page, from which a client may be able to perform certain actions associated with managing holding accounts, for example. Embodiments of cash flow pages for performing such functions as buying forward and scheduling payments out of holding are illustrated in **FIGS. 5A, B** and C.

[0070] Clicking on the pending orders link **344** preferably presents the client with a page displaying any orders the client has pending. In one embodiment, a pending orders page lists pending orders and includes such information as order numbers, number of orders, initiator of orders and associated time and date of initiation, whether and when orders were approved, etc. Such a page is preferably customizable in accordance with a particular client's preferences.

[0071] Activating the reports link **345** preferably leads the client to a reports page, from which a client may initiate a running and/or building of any of a variety of transaction reports. For example, a client may wish to review transactions completed using the system **100** during the past day, week, month, etc. Such reports may be displayed in any of a variety of formats. In one embodiment, a build link provides a client with control over this format by allowing a client to build reports, which may be standard or custom. Upon clicking the build link, the client may be presented with a list of potential reports to be created. For example, reports of beneficiary lists, forward contracts, holding account balances, duplicate payments, etc., may be made available. Once one or more report are selected, a variety of further options are preferably presented for that report, such as title, description, information to be reported, size, position on a page, reporting method, etc.

[0072] Clicking on the beneficiaries link **346** preferably leads to a page from which a client can add or modify beneficiary, and initiate present or future payment if desired. The configure link **347** preferably allows a client to modify information relating to the client personally, a client company, beneficiaries, delivery details, etc. These features are further described in detail below.

[0073] **FIGS. 4A** illustrates an embodiment of a pay today menu **400***a* that may be displayed when a user selects the pay today link **342** of the main menu page **300**. As shown, a main entry screen **410** is provided for entering information

for drafts to be issued for beneficiaries. The entry screen **410** contains a cancel entry link **412**, permitting a client to stop entry with no further liability on the client's part; a holding balances link **414** for examining current book and available balances in holding accounts the client may have; a standard entry link **416** that preferably enables switching between several data entry forms to fit preferences of the client; and a grid entry link **418** that links to a page that provides an alternative form for data entry. An embodiment of such an alternative form is illustrated in **FIG. 4B** as a grid entry pay today page **400***b*. As shown, this pay today page **400***b* provides an alternative form for data entry, includes many of the same features as the first pay today page **400***a*, and also includes a quick draft link **417** for returning to that form for data entry. Of course, any number of different types of data entry formats may be employed.

[**0074**] With continued reference to **FIGS. 4A and 4B**, the pay today pages **400***a* and **400***b* also include a quotes portion **420** having a quote link **422** and a view link **424**, and an order portion **440** including an order information window **442**, a finish link **444**, a review link **446**, an entry link **448** and a cancel link **450**. The order portion is further discussed below. In the present embodiment, clicking on the quote link **422** of the quotes portion **420** may direct a client to a separate quotes page having a list of real-time foreign exchange rates for all currencies available on the system **100**. Preferably, however, quotes are displayed on the same page, such as in the quotes portion **420**. Clicking on the quote link **422** may also automatically perform any calculation then possible. For example, from a pay today page, if an amount in one currency has been entered by the client, clicking on the quote link **422** may calculate a corresponding amount in the relevant currency based on current foreign exchange rates. Preferably, the quotes portion **420** lists in a time portion **426** a time up until which the quotes are guaranteed and may therefore be relied upon by the client. A time when the quotes were issued may also be displayed, if desired. In a preferred embodiment, quotes are guaranteed for a period of ten minutes, but this period may be as long or as short as an operator of the system **100** desires, and may differ between different clients. The use of quotes by a client will be discussed in greater detail below.

[**0075**] As discussed, the quote portion **420** preferably further includes quote information areas **426** and **432**, and a scrolling quote bar **430**. The quote portion **420** relates to information regarding foreign exchange rate quotes. The system **100** of the present invention offers quotes of foreign exchange rates through the quote facility **120** of **FIG. 1**. Cross rates, i.e. rates of currencies with respect to other currencies, are also preferably provided. When a client clicks on the quote link **422**, the web server **110** sends a request to the quote engine **122** of the quote facility **120**. The quote engine **122** is preferably a component object model (COM) and a protocol. The protocol is a set of stored procedures residing in, for example, a structured query language (SQL) server database. The quote engine **122** retrieves current, or spot, foreign exchange rates and forward points or forward rate quotes. Alternatively, the quotes may be derived from any or all of these quotes, as discussed below. This and other real time financial data may be self-gathered by the system **100**, but is preferably obtained via a live feed from an outside source, such as Reuters Group, PLC, of London. In addition, while the quote facility **120** is described as a part of the system **100**, it is contemplated that the quote facility **120**, or portions thereof, may be de-coupled from the system **100** and used to provide a real-time quoting service independent of the facilitation of a commercial transaction. Users may simply use it as a pricing estimator.

[**0076**] The quote engine **122** then processes the spot rates received in accordance with a plurality of parameters to derive a rate or rates to be quoted. The parameters considered may include current market spot rate; whether the transaction to which the rate is to be applied is a buy, sell, spot transaction, forward transaction, etc.; a client rate structure, e.g. various spreads based on the particular client; currency cushion; and others. That is, a rate and/or rate cushion may be determined in a variety of ways. In one embodiment, a rate cushion is dynamically variable based on any number of market and exogenous factors, and can be modified on a per client basis as well as system-wide. For determination of a forward rate to be quoted, market information such as native and foreign interest rates are preferably also considered in conjunction with a spot exchange rate. In one embodiment, forward points are added to the spot rate. The forward rate may then be presented in a form of a simple foreign exchange rate, or in a form of a 'spot related' rate with additional points, for example.

[**0077**] Note that spread feature discussed above is preferably optional, and is provided in order to provide a potential revenue stream for an operator of a system **100** of the present invention. If no such revenue stream is desired, then a spread may be zero, i.e. no spreads need to be applied. In another embodiment, the spread represents the risk and uncertainty of cross-currency transactions taken on by the operator of the system **100**, and would thus result in no risk being maintained by either party to the corresponding transaction. By altering these spreads, risk and uncertainty can be shared to varying degrees between a client, vendor, and third party providing payment services. Alternatively, a transaction may be a 'fulfillment transaction' that does not involve any rates at all. For example, a client may have purchased funds into holding at some prior time and is merely providing instructions for disbursement of those funds.

[**0078**] Further information considered in generating a rate quote may be stored in the consolidated rate structure **124**. The consolidated rate structure **124** is a database that preferably holds such client-specific information as a given spread for each client and a history of rate quotes given to each client and the subsequent disposition of those quotes, i.e. whether the client executed or scheduled a transaction using each quote. The spread assigned to each client provides a measure of a modifying of spot exchange rates that occurs prior to a rate being quoted to the client. For example, a spread may be zero, whereby a client will be quoted the spot rate, or any positive or negative value, indicating that a spot rate should be increased or decreased.

[**0079**] In one embodiment, a possible optimization of the quote engine **122** of the present invention described herein would be to build in any number of business rules to make the setting of spreads dynamically and automatically sensitive to market conditions such as market volatility (defined herein as the range of rate fluctuation along with the speed or frequency of rate fluctuation), payment patterns on the part of the client, and other factors in order to manage risk and/or enhance profitability.

[0080] Another possible embodiment of the optimization described above would be to extend the business rules to the domain of business objectives, so that the spreads would be dynamically adjusted to perform any or all of the following: enhance profitability for the seller of the payment instruments; reduce the cost and complexity of payments to the client; and take advantage of brief foreign exchange market disparities and allow the rates quoted to 'lag' the direction of the market. Note that this is different from many known systems in that neither party to the transaction assumes any risk, and in that each party has full control of what each wishes to do. For example, a vendor gets the desired price and a consumer pays a desired price. Rather, the risk is maintained by the system **100**.

[0081] The processing of the above-described parameters and information by the quote engine **122**, including data stored in the consolidated rate structure **124**, is preferably controlled by a software application. Flexibility offered by such a software application would allow stored parameters to be modified real-time, and in a variety of capacities. For example, a rate structure may be altered for one or multiple clients, temporarily or permanently, with respect to one or multiple currencies, etc.

[0082] Following any desired exchange rate processing, the quote server **126** preferably sends the modified rate quote information back to the web server **110**. Under control of the software application, the quote information may be immediately displayed to the client. Alternatively, the quote information may be forwarded to staff members of the system **100**, who then provide the quote information to clients.

[0083] Referring again to **FIGS. 4A and 4B**, the scrolling quote bar **430** provides a scrolling list of the foreign exchange rates received by the web server **110** from the quote server **126**. Rates are displayed for various currencies with respect to the currently logged-in client's native currency. The scrolling quote bar **430** is preferably customizable at a discretion of the client, whereby the client may change the number of rates displayed, the manner in which they are displayed, the client's native currency, etc. While the scrolling quote bar **430** may display realtime, constantly-changing rates, it is preferable that the displayed quoted rates are updated at a request of the client, such as by clicking on the quote link **422**. Preferably, the results in the display thereafter remain constant for a period of time, notwithstanding potential market-related shifts in exchange rates that may occur. Note that clicking on the view link **424** may lead to display of the same quotes in a different format, such as, in one embodiment, a static page that opens in a new browser window.

[0084] As an illustrative example of a use of real-time quotes, reference is made to the quote rates being displayed in the scrolling quote bar **430**. According to the quote information area **426**, the rates quoted are valid until Nov. 03, 2000 at 2:19PM. In this manner, once the client receives the rate quotes, the client has a period of time to conduct a market transaction, such as buying foreign currency, paying beneficiaries or otherwise fulfilling an obligation, etc. For example, if the client clicks on the pay today link **428** of **FIG. 3**, discussed below, the system **100** will dynamically price a selected transaction based on the currently displayed rate quotes, assuming the period for which the quotes are valid has not yet expired. For reference, the quote information area **432** displays a settlement currency, illustrated here as the United States dollar (USD).

[0085] The order portion **440** includes an order information window **442**, a finish link **444**, a review link **446**, an entry link **448** and a cancel link **450**. A client preferably initiates a payment process by clicking on the entry link **444**. A client may preferably review entered orders by activating the review link **446**, and may cancel orders that have been entered but not transacted by clicking on the cancel link **450**. Preferably, a client may cancel any order that has not been carried out without incurring any liability as a result.

[0086] In the embodiment of the present invention illustrated by **FIGS. 3, 4A** and **4B**, links are provided to various financial information and features available from the system **100** of the present invention. One of these links, the plan cash flow link **343**, preferably directs a client to a page containing, among other things, financial information relating to client accounts such as holding accounts. The system **100** provides one or more holding accounts to its clients where the clients may maintain funds in foreign currencies. A client may buy foreign currency for the accounts, where it is held until disposed of by the client. The client may dispose of foreign funds by making a payment, such as by draft or electronic funds transfer, or by selling the currency back to the system **100**. Preferably, electronic payments will be processed by a facility such as the cross-border electronic funds transfer facility **170**.

[0087] Holding accounts provide numerous advantages to a client. Because clients are able to aggregate several sources of payments and cash flow over time, clients may then schedule larger payments out at later date. When scheduling funds forward, clients can automatically receive funds forward, and can schedule payments out of holding based on funds that will be delivered in at some future point in time. In one embodiment, clients may be enabled to schedule payments out of holding even when the client has no current funds in any holding accounts. The client can then 'feed' the holding account using a variety of methods, such as selling incoming foreign funds into holding from outside sources, purchasing funds into holding, or ordering funds forwards. The payment will be released only if there are sufficient funds in the corresponding holding account. This is advantageous to the client in that the client gets more control over the client's cross-border accounts and payable cash flow. This feature also allows the client to cast 'what if' scenarios and examine various cash management strategies. The client can further use foreign exchange market information to time the feeding of the holding accounts to either minimize risk and/or maximize profit.

[0088] In one embodiment, clicking on the plan cash flow link **343** of **FIGS. 4A and 4B** directs a client to any of a variety of cash flow pages, as illustrated in **FIGS. 5A, 5B** and **5C**. These pages preferably provide additional links to other cash flow pages as well. As shown on the variety of cash flow pages **500***a,* **500***b* and **500***c,* these links may include a manage holding accounts link **502**, a buy into holding link **504**, a buy forward link **506** and a schedule payments link **508**, for scheduling payments out of holding. Preferably, these cash flow pages are specific to the currently logged-in client. There, the client can view a list of the holding accounts the client currently has open, and the funds available in each account.

[0089] Clicking on the manage holding accounts link **502** may direct the client to a manage holding accounts page **500***a*. As shown in **FIG. 5**A, the manage holding accounts page **500***a* includes such links as a view balances link **510**, for viewing holding accounts balances; a committed link **512**, for determining if funds have been slated for transfer out, for example; a view forwards link **514**, for viewing forwards; and a view scheduled payments link **516**, for viewing any scheduled payments from the client's account.

[0090] If a client wishes to open a new holding account, or buy currency into an existing holding account, the client preferably indicates such by clicking on the buy into holding link **504**. The client will preferably be presented with a web page adapted to allow entry of information relating to a desired holding account. For example, the client may simply enter an amount and a foreign currency. The system **100** will preferably automatically establish an account and deduct the appropriate funds, based on a current exchange rate, from the client's native currency account. If an exchange rate had previously been quoted, and had not yet expired, that exchange rate would be applied. In one embodiment, a client may create a 'what if' scenario at any time, for illustrative purposes, with no commitment on the part of the client to the foreign exchange supplier.

[0091] If a client wants to buy funds forward, the client preferably clicks on the buy forward link **506**, which may present to the client a page such as the buy forward page **500***b*. From this page **500***b*, the client may specify a currency and amount, and a desired delivery date, for funds to be purchased forward.

[0092] Similarly, when a client desires to schedule payments out of holding, the schedule payments link **508** may be used to access a schedule payments page **500***c*. From this page **500***c*, the client may select a currency, amount and release date, and a desired beneficiary. Options for differing data entry formats may be provided, such as by a quick draft link **510** and a grid entry link **512**.

[0093] Referring again to **FIG. 3**, the beneficiaries link **346** and associated processes of adding and modifying beneficiaries and/or making or scheduling payments to beneficiaries will now be described. As noted above, the order portion **440** of **FIG. 4A** or 4B includes an order information window **442**, a finish link **444**, a review link **446**, an entry link **448** and a cancel link **450**. A client preferably initiates a payment process by clicking on the entry link **444**. As is discussed below, a client may also add a beneficiary and schedule a payment in the same step or series of steps. Alternatively, for a client viewing the main menu **300** of **FIG. 3**, the client may initiate a current payment process by clicking the pay today link **342**, for example. In one embodiment, the future payment server **150**, discussed above, carries out any processing of such future payments. Typically, future payments will take the form of a forward contract, in which a current exchange rate is locked in for a transaction to be executed in the future.

[0094] For a client who has not yet designated beneficiaries, or who desires to add additional beneficiaries, an option to add beneficiaries is preferably provided. This option may be available from a page reached by clicking on the beneficiaries link **346**. Typically, the list should include beneficiaries that the client regularly makes payments to or intends to make payments to in the future. As will be appreciated by one skilled in the art, the beneficiary process may be as simple as completing a web page form adapted for submission of any of a variety of forms of information. For example, a client may be queried for information such as beneficiary name, country, native currency, reference/delivery information, acceptable form(s) of payment, etc. This information may be updated or modified at any time without making a payment.

[0095] In one embodiment, selecting a beneficiary from a list of beneficiaries, or alternatively, selecting an add link to add a new beneficiary, leads to display of a beneficiary maintenance page. An embodiment of such is illustrated as a beneficiary maintenance page **600** in **FIG. 6**. From this page **600**, the client may return to a main list by clicking a beneficiary list link **602**, or may give or receive more information by clicking an additional info link **604**. Or, from a data entry portion **610**, the client may add or modify such beneficiary information as shorthand or familiar name, 'payable-to' or official name, beneficiary status; may designate whether draft or check payment and/or electronic funds transfer (EFT) payment will be allowed for the beneficiary; select a default currency and preferred form of payment; designate a country of the beneficiary; and others.

[0096] For EFT-enabled beneficiaries, the data entry portion **610** may also allow for entry of EFT information, such as bank country and name, requirements, account and routing information, routing address, etc. Preferably, a show EFT requirements button or link **620** is further provided here. This feature provides the system **100** of the present invention with a built-in intelligence with regard to EFT requirements of each country to which an EFT is made, through which the system **100** is able to verify and validate users' inputs to ensure compliance with the requirements. This feature also preferably provides on-screen descriptions of what is required if requested by a user.

[0097] In another embodiment, a client may add a beneficiary directly as part of an order, rather than through a separate 'add beneficiaries' step. The beneficiary may then optionally be saved, giving the client the freedom and flexibility of 'delayed binding' of this information. The system **100** may also include the bulk load facility **140** of **FIG. 1**. As discussed below, the bulk load facility **140** greatly facilitates the entry of beneficiaries and associated payment orders.

[0098] Upon clicking the add beneficiaries link (not shown) or the pay beneficiaries link **346**, a client will preferably be presented with a web page that includes a list of previously entered beneficiaries and associated payments. Clicking on the pay today link **342** or the plan cash flow link **343** may also lead to options for similar pages, such as the schedule payments page **500***c*, if desired. Regardless, a transaction may be scheduled for present or for any future time. In each case, the payments referred to may be periodic payments to respective beneficiaries, or may be one-time transactions. For example, a selected transaction may designate a present or future payment to a foreign beneficiary, in a certain amount. At this time, the client may also add additional payments or other transactions if desired. A client also preferably designates a form of payment at this time. While orders may be executed in any known manner, it is preferable that the client select between foreign drafts, which may be drawn on foreign banks using a currency associated with the transaction, or electronic funds transfers.

[0099] In another embodiment, clicking on the add beneficiaries link, the beneficiaries link **346**, the quick draft link **417**, etc., leads to a 'quick payment' page. In this embodiment, alternative functionality may be provided. For example, the client may be presented with a 'holding balances' button, allowing the client to display foreign funds balances available in various holding accounts in a secondary window while viewing the order entry page. Preferably, the balances displayed are 'available balances' rather than 'book balances,' such that the client can learn the limits to the amounts that can be taken out of holding. In an embodiment where both of the above order options are available, the client may further be presented with a 'change entry' option. This option allows the client to change entry modes on the fly, while entering an order, with no information being lost, thereby providing a dynamically configurable view in which the entered information is de-coupled from a method of presentation.

[0100] In yet another embodiment of the present invention, the system **100** of the present invention may provide for an optional multi-tier approval process, whereby one user may enter an order and provisionally commit to the order. The order is then held in a pending state, until another client or user of the system **100**, one with greater authority for example, gives final approval for commitment for the order. Preferably, there is no limit in the system as to the number of hierarchical approvals that are necessary to authorize the transaction, and no limit to the time required for those authorizations to be given. This feature takes into account the typical internal authorization flows within large and more complex organizations.

[0101] In still yet another embodiment of the present invention, a client is able to enter not only present transactions and transactions set to execute at a specific time, but also transactions that will execute only when and if a specific foreign exchange rate is available. These limit transactions, or standing orders, are entered in the same manner as the present and future orders discussed, with the exception that a client must also enter a desired exchange rate. If the desired rate is achieved, the transaction will execute. Otherwise, the transaction may be set to expire after any passage of any chosen period of time.

[0102] Once one or more beneficiary payments have been scheduled, a client may review them by clicking on the pending orders link **344** of the main menu bar **350** or on the review link **446** of the order portion **440** of the menu bar **410**, for example. One or more of the payment options may then be selected, as an indication by the client of a desire to execute the selected transaction or transactions. As discussed below, the client may chose to execute a transaction following receipt of a favorable exchange rate quote with respect to the transaction. As long as an exchange rate quote has not yet expired at a time of execution of a transaction, the transaction will receive the benefit of that rate quote.

[0103] In each of the above embodiments, it is possible for a client to enter all details of a payment or order, but not commit it for processing. This allows the client to mark the order as 'pending.' The client may then go into the system **100** of the present invention at any time, and price the pending order by clicking on a link, such as one labeled 're-price,' for example. The client could then commit, cancel or leave the order pending. Thus, the client may use the system **100** as a 'scratch pad'. This feature places the client in complete control, and provides the client with access to immediate knowledge of the costs that the client would incur upon commitment of the order. As will be appreciated by one skilled in the art, this feature for making transactional elements pending may also be used in broader contexts that foreign exchange and/or global payments. For example, the present invention may be generalized to include any purchase item, such as commodities including stocks, bonds, physical inventory used in manufacturing, etc., services, and others.

[0104] Following selection of one or more transactions for execution, the system **100** may then optionally proceed to a type of financial confirmation page, as will be appreciated by one skilled in the art. Such a confirmation page is preferably designed to give a client a final opportunity to review all transactions, modify transaction as desired, or cancel transactions before they are irreversibly executed. The page may include any or all details of each transaction, including applicable foreign exchange rate, anticipated account balance, form of payment (e.g., draft, electronic funds transfer, etc.), service charge, or others. When a client is satisfied with a status of all orders, verified any delivery and notification information, etc., the order or orders will be executed.

[0105] Through use of the real-time foreign exchange quote and payment scheduling features of the system **100** of the present invention, clients can realize significant advantages in the execution of foreign transactions. In light of constantly varying foreign exchange rates, a timing of foreign transactions, particularly those involving large sums of money, can have a marked effect on economic impact to clients. The availability of real-time exchange rate quotes allows a client to constantly monitor the status of the market. Additional features of the present invention, discussed below, further assist in predicting future market behavior.

[0106] As mentioned above, the present invention preferably uses the bulk load facility **140**. The bulk load facility **140** allows clients to upload beneficiary and associated payment information in a markup page format, such as hypertext markup language (HTML), extensible markup language (XML), etc. The format will be read, and the desired transactions automatically generated and priced. In this manner, the bulk load facility **140** can be an advantageous feature, particularly to clients having a large number of payments, or who simply prefer to upload payment information electronically. Alternatively, clients may enter information for beneficiaries one at a time, but need not store beneficiary information at all. Order information may be entered as part of an order itself, with the information either being retained or not retained at the client's option.

[0107] As discussed above, the main menu bar **340** further includes a configure link **347**. The configure link **347** preferably leads to a further page having a variety of user information and preference options. For example, the configure link **347** preferably allows a client to submit personal or company information to the system **100**. This information may include contact information, quote and payment preferences, etc. Options to add to or modify a user account may allow a client to set up a client account for more than one user. For example, a corporate client may wish to grant access to any or all of its employees. The configure link **347** may also lead a client to an option to select which alerts

related to the client's account will trigger various messages in a message center **310**, as was discussed above with respect to **FIG. 3**.

[**0108**] Beneficiary options are preferably further provided that allow for an addition or deletion of beneficiaries from a stored list of beneficiaries. When a client elects to schedule a payment, for example, such a list of beneficiaries may be used to give the client a list of potential recipients of the payment. Also, the configure link **347** may provide another option where the client may modify such information as delivery instructions in the system **100**. The delivery method may relate to orders or drafts, for example, and may include ground service, overnight air mail, 2-day service, etc. Delivery and/or pickup locations may also be modified. Countless other options are contemplated, as will be appreciated by one skilled in the art.

[**0109**] The present invention may further be provided with a market link portion having such links as an overview link, a profile link, and others providing to clients access to certain market-related and other financial information. The information may be raw currency data, or may include news-related items or other forms of information useful in predicting future market behavior. The overview link preferably provides a summary of recent economic and financial events. Included may be a list of market highlights for the future. The profile link preferably includes more specific market information directed to any one of the plurality of currencies traded throughout the system **100**. Other related links are contemplated as well.

[**0110**] In another aspect of the present invention, a feature is provided for foreign draft or check printing. Because the system **100** of the present invention is involved in the buying and selling of foreign currency, it is advantageous to have the ability to issue on demand drafts that are acceptable in the country, and associated financial institution, from which they are drawn. These drafts are preferably issued at a time a client's order is processed.

[**0111**] Different banks or other financial entities have different requirements with respect to size and other format-related features of drafts. These requirements include typeface or font, and field positioning of account numbers and sort codes (for example, E13B, CMC7, OCR-A, etc.), among other requirements. Conformance to such requirements may be necessary so that automatically produced drafts may be cleared by automated check clearing equipment of countries on which the drafts are drawn. In one embodiment of a method of the present invention, the system **100** preferably first receives a sample draft, illustrating the requirements, from each financial entity with which financial transactions are desired. Specifically, sample drafts are preferably received from banks in countries with which the system **100** is associated. These sample drafts may then scanned and digitized, and stored on a machine-readable medium. Sample drafts, or other means, may also be used to determine and replicate such features as magnetically and optically encoded areas in accordance with requirements.

[**0112**] Images resulting from the scans may then be field-encoded such that fields for party, amount, date, etc., may be altered for individual drafts while maintaining conformance with formatting restrictions. In addition, once scanned, the draft images may be adjusted for printing on stock paper of varying sizes as required by the banks or other entities. If desired, sample drafts may be printed and cleared for acceptability by the relevant parties. In one embodiment, necessary processing for the check or draft feature of the present invention is carried out by the check generation facility **160** of **FIG. 1**.

[**0113**] Once the draft images have been stored and cleared, drafts may advantageously be printed one or more at a time on demand. Furthermore, by using the digitized forms of the drafts, the drafts may be customized or otherwise modified, such as through the addition of logos or other designs specific to individual clients.

[**0114**] Implementation

[**0115**] An embodiment of a computer system **700** and an embodiment of an associated network **800** capable of carrying out the functionality described herein are shown in more detail in **FIGS. 7 and 8**, respectively. The computer system **700** includes one or more processors, such as a processor **704**. The processor **704** is connected to a communication bus **706**. Various software embodiments are described in terms of this exemplary computer system. After reading this description, it will become apparent to a person skilled in the relevant art how to implement the invention using other computer systems and/or computer architectures.

[**0116**] The computer system **702** also includes a main memory **708**, preferably random access memory (RAM), and can also include a secondary memory **710**. The secondary memory **710** can include, for example, a hard disk drive **712** and/or a removable storage drive **714**, representing a floppy disk drive, a magnetic tape drive, an optical disk drive, etc. The removable storage drive **714** reads from and/or writes to a removable storage unit **718** in a well-known manner. The removable storage unit **718**, represents a floppy disk, magnetic tape, optical disk, etc. which is read by and written to by the removable storage drive **714**. As will be appreciated, the removable storage unit **718** includes a computer usable storage medium having stored therein computer software and/or data.

[**0117**] In alternative embodiments, the secondary memory **710** may include other similar means for allowing computer programs or other instructions to be loaded into the computer system **702**. Such means can include, for example, a removable storage unit **722** and an interface **720**. Examples of such can include a program cartridge and cartridge interface (such as that found in video game devices), a removable memory chip (such as an EPROM, or PROM) and associated socket, and other removable storage units **722** and interfaces **720** which allow software and data to be transferred from the removable storage unit **722** to the computer system **702**.

[**0118**] The computer system **702** can also include a communications interface **724**. The communications interface **724** allows software and data to be transferred between the computer system **702** and external devices. Examples of the communications interface **724** can include a modem, a network interface (such as an Ethernet card), a communications port, a PCMCIA slot and card, keyboard, pointing device such as a mouse or track ball, voice activated synthesizer, infra-red connection, etc. Software and data transferred via the communications interface **724** are in the

form of signals **726** that can be electronic, electromagnetic, optical or other signals capable of being received by the communications interface **724**. Signals **726** are provided to communications interface via a channel **728**. A channel **728** carries signals **726** and can be implemented using wire or cable, fiber optics, a phone line, a cellular phone link, an RF link and other communications channels.

[**0119**] In this document, the terms "computer program medium" and "computer usable medium" are used to generally refer to media such as the removable storage device **718**, a hard disk installed in hard disk drive **712**, and signals **726**. These computer program products are means for providing software to the computer system **702**.

[**0120**] Computer programs (also called computer control logic) are stored in the main memory **708** and/or the secondary memory **710**. Computer programs can also be received via the communications interface **724**. Such computer programs, when executed, enable the computer system **702** to perform the features of the present invention as discussed herein. In particular, the computer programs, when executed, enable the processor **704** to perform the features of the present invention. Accordingly, such computer programs represent controllers of the computer system **702**.

[**0121**] In an embodiment where the invention is implemented using software, the software may be stored in a computer program product and loaded into the computer system **702** using the removable storage drive **714**, the hard drive **712** or the communications interface **724**. The control logic (software), when executed by the processor **704**, causes the processor **704** to perform the functions of the invention as described herein.

[**0122**] In another embodiment, the invention is implemented primarily in hardware using, for example, hardware components such as application specific integrated circuits (ASICs). Implementation of such a hardware state machine so as to perform the functions described herein will be apparent to persons skilled in the relevant art(s).

[**0123**] In yet another embodiment, the invention is implemented using a combination of both hardware and software.

[**0124**] As illustrated in **FIG. 8**, the network **800** includes a server-side web server **810**, quote server **820**, database **830** and electronic funds transfer (EFT) facility **870** in communication with one or more client computers **890** over a network **880**. The web server **810** may be interfaced with the quote server **820**, database **830** and the EFT facility **870** via a private services virtual local area network (VLAN) **856** and/or back-up VLANs **858**. The VLANs preferably allow separation of independent streams of data traffic through the system. Firewall protection may further be provided for security via a secure hosting firewall **852**, optionally having a dedicated line, and a firewall egress VLAN **854**. One or more additional back-up VLANs **850** may act to interface the web server **810** with the one or more client systems or computers **890**.

[**0125**] Conclusion

[**0126**] While various embodiments of the present invention have been described above, it should be understood that they have been presented by way of example only, and not limitation. For example, the present invention is not limited to the physical arrangements or use with any particular network. The illustrated web pages and associated links and functionality are exemplary, and may be subject to rearrangement, modification, deletion, addition, etc., within the scope of the present invention. In addition, single or multiple portions of the present invention, whether physical or conceptual, may be de-coupled and used independently, such as in any of a variety of business-to-business or business-to-consumer settings. As such, the breadth and scope of the present invention should not be limited to any of the above-described exemplary embodiments, but should be defined only in accordance with the following claims and their equivalents.

What is claimed is:

1. A method for providing a foreign exchange rate quote to a client over a public network, comprising:

obtaining a current rate from a quote source;

accessing secondary information;

calculating a modified rate quote based on the current rate and the accessed secondary information; and

providing the modified rate quote to the client.

2. The method of claim 1, said accessing comprising:

accessing client-specific information

3. The method of claim 2, wherein said client-specific information includes a predetermined spread assigned to the client.

4. The method of claim 2, wherein said client-specific information includes a transaction history of the client.

5. The method of claim 1, said accessing comprising:

accessing rate-specific information.

6. The method of claim 5, wherein said rate-specific information includes a predetermined currency cushion based on a national origin of a currency to which the foreign exchange rate quote relates.

7. The method of claim 5, wherein said rate-specific information includes a foreign interest rate.

8. The method of claim 1, said accessing comprising:

accessing transaction-specific information.

9. The method of claim 8, wherein said transaction-specific information includes information indicating a nature of a transaction for which the foreign exchange rate quote is provided.

10. The method of claim 9, wherein said transaction-specific information indicates whether the transaction is any of a buy, a sell, a spot transaction or a forward.

11. The method of claim 10, wherein when the transaction is a forward, said method further comprises:

adding forward points to said calculated modified rate quote.

12. The method of claim 1, said accessing comprising:

accessing at least two of client-specific, rate-specific and transaction-specific information.

13. The method of claim 1, further comprising:

defining a period of time during which the modified rate quote will be valid.

14. The method of claim 13, further comprising:

calculating a settling rate for a transaction based on the modified rate quote in response to a request for the same by the client during the defined period of time.

15. The method of claim 1, further comprising:

receiving a request for a quote from the client.

16. A method for generating a draft conforming to requirements of any of a plurality of financial centers, comprising:

receiving from a financial center a sample draft;

determining from the sample draft a set of draft requirements;

storing electronically the set of draft requirements; and

producing a draft based on the stored set of draft requirements.

17. The method of claim 16, wherein the set of draft requirements includes at least one of draft size and draft format.

18. The method of claim 16, further comprising:

modifying the stored set of draft requirements based on client-specific information.

19. The method of claim 18, wherein the client-specific information includes a client logo.

20. The method of claim 18, wherein the client-specific information includes at least one of a party, draft amount and date for an individual draft.

21. A method for scheduling international transactions for a client, comprising:

transmitting real-time foreign exchange rate information to the client;

receiving from the client an order for a plurality of transactions to be conducted in a plurality of currencies, the plurality of transactions being based on the transmitted foreign exchange rate information;

scheduling execution of at least one of the plurality of transactions; and

arranging for billing of the client upon execution of the at least one of the plurality of transactions in a native currency of the client;

wherein the at least one of the plurality of scheduled transactions is to be executed with respect to any of a number of beneficiaries previously designated by the client.

22. The method of claim 21, wherein the at least one of the plurality of transactions is to be conducted in a currency different from the native currency of the client.

23. The method of claim 21, further comprising:

executing the at least one of the plurality of transactions; and

billing the client, upon execution of the at least one of the plurality of transactions, in a native currency of the client.

24. The method of claim 21, further comprising:

canceling the at least one scheduled transaction without imparting any associated liability to the client.

25. An apparatus for providing a foreign exchange rate quote to a client over a public network, comprising:

means for obtaining a current rate from a quote source;

means for accessing secondary information;

means for calculating a modified rate quote based on the current rate and the accessed secondary information; and

means for providing the modified rate quote to the client.

26. An apparatus for generating a draft conforming to requirements of any of a plurality of financial centers, comprising:

means for receiving from a financial center a sample draft;

means for determining from the sample draft a set of draft requirements;

means for storing electronically the set of draft requirements; and

means for producing a draft based on the stored set of draft requirements.

27. An apparatus for scheduling international transactions for a client, comprising:

means for transmitting real-time foreign exchange rate information to the client;

means for receiving from the client an order for a plurality of transactions to be conducted in a plurality of currencies, the plurality of transactions being based on the transmitted foreign exchange rate information;

means for scheduling execution of at least one of the plurality of transactions; and

means for arranging for billing of the client upon execution of the at least one of the plurality of transactions in a native currency of the client;

wherein the at least one of the plurality of scheduled transactions is to be executed with respect to any of a number of beneficiaries previously designated by the client.

* * * * *