US007082615B1

(12) **United States Patent**
Ellison et al.

(10) **Patent No.: US 7,082,615 B1**
(45) **Date of Patent: Jul. 25, 2006**

(54) **PROTECTING SOFTWARE ENVIRONMENT IN ISOLATED EXECUTION**

(75) Inventors: **Carl M. Ellison**, Portland, OR (US); **Roger A. Golliver**, Beaverton, OR (US); **Howard C. Herbert**, Phoenix, AZ (US); **Derrick C. Lin**, San Mateo, CA (US); **Francis X. McKeen**, Portland, OR (US); **Gilbert Neiger**, Portland, OR (US); **Ken Reneris**, Wilbraham, MA (US); **James A. Sutton**, Portland, OR (US); **Shreekant S. Thakkar**, Portland, OR (US); **Millind Mittal**, Palo Alto, CA (US)

(73) Assignee: **Intel Corporation**, Santa Clara, CA (US)

(*) Notice: Subject to any disclaimer, the term of this patent is extended or adjusted under 35 U.S.C. 154(b) by 687 days.

(21) Appl. No.: **09/668,610**

(22) Filed: **Sep. 22, 2000**

Related U.S. Application Data

(63) Continuation-in-part of application No. 09/540,946, filed on Mar. 31, 2000.

(51) **Int. Cl.**
G06F 7/04 (2006.01)

(52) **U.S. Cl.** **726/26**; 713/190; 713/165; 380/44; 711/163

(58) **Field of Classification Search** 713/2, 713/165, 170, 190, 200, 164; 380/44, 45; 711/163; 726/26
See application file for complete search history.

(56) **References Cited**

U.S. PATENT DOCUMENTS

3,699,532	A	10/1972	Schaffer et al.
3,996,449	A	12/1976	Attanasio et al.
4,037,214	A	7/1977	Birney et al.
4,162,536	A	7/1979	Morley
4,207,609	A	6/1980	Luiz et al.
4,247,905	A	1/1981	Yoshida et al.
4,276,594	A	6/1981	Morley
4,278,837	A	7/1981	Best
4,307,447	A	12/1981	Provanzano et al.
4,319,233	A	3/1982	Matsuoka et al.

(Continued)

FOREIGN PATENT DOCUMENTS

DE	4217444	12/1992

(Continued)

OTHER PUBLICATIONS

"M68040 User's Manual", 1993, Motorola Inc., p. 1-5-p. 1-9, p. 1-13-p. 1-20, p. 2-1-p. 2-3, p. 4-1, p. 8-9-p. 8-11.

(Continued)

Primary Examiner—Christopher Revak
Assistant Examiner—Kavesh Abrishamkar
(74) *Attorney, Agent, or Firm*—Michael R. Barre

(57) **ABSTRACT**

The present invention is a method and apparatus to protect a subset of a software environment. A key generator generates an operating system nub key (OSNK). The OSNK is unique to an operating system (OS) nub. The OS nub is part of an operating system in a secure platform. A usage protector uses the OSNK to protect usage of a subset of the software environment.

40 Claims, 13 Drawing Sheets

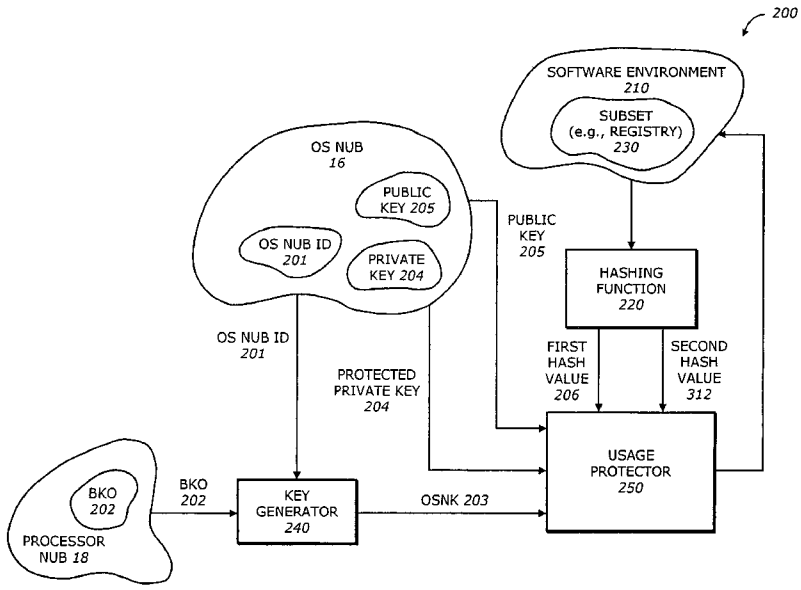

TARGET 1019

U.S. PATENT DOCUMENTS

4,319,323	A	3/1982	Ermolovich et al.
4,347,565	A	8/1982	Kaneda et al.
4,366,537	A	12/1982	Heller et al.
4,403,283	A	9/1983	Myntti et al.
4,419,724	A	12/1983	Branigin et al.
4,430,709	A	2/1984	Schleupen
4,521,852	A	6/1985	Guttag
4,571,672	A	2/1986	Hatada et al.
4,759,064	A	7/1988	Chaum
4,795,893	A	1/1989	Ugon
4,802,084	A	1/1989	Ikegaya et al.
4,975,836	A	12/1990	Hirosawa et al.
5,007,082	A	4/1991	Cummins
5,022,077	A	6/1991	Bealkowski et al.
5,075,842	A	12/1991	Lai
5,079,737	A	1/1992	Hackbarth
5,187,802	A	2/1993	Inoue et al.
5,230,069	A	7/1993	Brelsford et al.
5,237,616	A	8/1993	Abraham et al.
5,255,379	A	10/1993	Melo
5,287,363	A	2/1994	Wolf et al.
5,293,424	A	3/1994	Holtey et al.
5,295,251	A	3/1994	Wakui et al.
5,303,378	A	4/1994	Cohen
5,317,705	A	5/1994	Gannon et al.
5,319,760	A	6/1994	Mason et al.
5,361,375	A	11/1994	Ogi
5,386,552	A	1/1995	Garney
5,421,006	A	5/1995	Jablon et al.
5,437,033	A	7/1995	Inoue et al.
5,455,909	A	10/1995	Blomgren et al.
5,459,867	A	10/1995	Adams et al.
5,459,869	A	10/1995	Spilo
5,469,557	A	11/1995	Salt et al.
5,473,692	A	12/1995	Davis
5,479,509	A	12/1995	Ugon
5,504,922	A	4/1996	Seki et al.
5,506,975	A	4/1996	Onodera
5,511,217	A	4/1996	Nakajima et al.
5,522,075	A	5/1996	Robinson et al.
5,555,385	A	9/1996	Osisek
5,555,414	A	9/1996	Hough et al.
5,560,013	A	9/1996	Scalzi et al.
5,564,040	A	10/1996	Kubals
5,568,552	A	10/1996	Davis
5,574,936	A	11/1996	Ryba et al.
5,582,717	A	12/1996	Di Santo
5,604,805	A	2/1997	Brands
5,606,617	A	2/1997	Brands
5,615,263	A	3/1997	Takahashi
5,628,022	A	5/1997	Ueno et al.
5,633,929	A	5/1997	Kaliski, Jr.
5,657,445	A	8/1997	Pearce
5,668,971	A	9/1997	Neufeld
5,684,948	A	11/1997	Johnson et al.
5,706,469	A	1/1998	Kobayashi
5,717,903	A	2/1998	Bonola
5,729,760	A	3/1998	Poisner
5,737,604	A	4/1998	Miller et al.
5,737,760	A	4/1998	Grimmer, Jr. et al.
5,740,178	A	4/1998	Jacks et al.
5,752,046	A	5/1998	Oprescu et al.
5,757,919	A	5/1998	Herbert et al.
5,764,969	A	6/1998	Kahle et al.
5,796,845	A	8/1998	Serikawa et al.
5,805,712	A	9/1998	Davis
5,809,546	A	9/1998	Greenstein et al.
5,825,880	A	10/1998	Sudia et al.
5,835,594	A	11/1998	Albrecht et al.
5,844,986	A	12/1998	Davis
5,852,717	A	12/1998	Bhide et al.
5,854,913	A	12/1998	Goetz et al.
5,872,994	A	2/1999	Akiyama et al.
5,890,189	A	3/1999	Nozue et al.
5,898,883	A	4/1999	Fujii et al.
5,901,225	A	5/1999	Ireton et al.
5,919,257	A	7/1999	Trostle
5,935,242	A	8/1999	Madany et al.
5,935,247	A	8/1999	Pai et al.
5,937,063	A	8/1999	Davis
5,950,221	A	9/1999	Draves et al.
5,953,502	A	9/1999	Helbig, Sr.
5,956,408	A	9/1999	Arnold
5,970,147	A	10/1999	Davis
5,978,475	A	11/1999	Schneier et al.
5,978,481	A	11/1999	Ganesan et al.
5,987,557	A	11/1999	Ebrahim
6,014,745	A	1/2000	Ashe
6,035,374	A	3/2000	Panwar et al.
6,044,478	A	3/2000	Green
6,055,637	A	4/2000	Hudson et al.
6,058,478	A	5/2000	Davis
6,061,794	A	5/2000	Angelo et al.
6,075,938	A	6/2000	Bugnion et al.
6,085,296	A	7/2000	Karkhanis et al.
6,088,262	A	7/2000	Nasu
6,092,095	A	7/2000	Maytal
6,093,213	A	7/2000	Favor et al.
6,101,584	A	8/2000	Satou et al.
6,108,644	A	8/2000	Goldschlag et al.
6,115,816	A	9/2000	Davis
6,125,430	A	9/2000	Noel et al.
6,131,166	A	10/2000	Wong-Insley
6,148,379	A	11/2000	Schimmel
6,158,546	A	12/2000	Hanson et al.
6,173,417	B1	1/2001	Merrill
6,175,924	B1	1/2001	Arnold
6,175,925	B1	1/2001	Nardone et al.
6,178,509	B1	1/2001	Nardone et al.
6,182,089	B1	1/2001	Ganapathy et al.
6,188,257	B1	2/2001	Buer
6,192,455	B1	2/2001	Bogin et al.
6,199,152	B1	3/2001	Kelly et al.
6,205,550	B1	3/2001	Nardone et al.
6,212,635	B1	4/2001	Reardon
6,222,923	B1	4/2001	Schwenk
6,226,749	B1	5/2001	Carloganu et al.
6,249,872	B1	6/2001	Wildgrube et al.
6,252,650	B1	6/2001	Nakamura
6,269,392	B1	7/2001	Cotichini et al.
6,272,533	B1	8/2001	Browne
6,272,637	B1	8/2001	Little et al.
6,275,933	B1	8/2001	Fine et al.
6,282,650	B1	8/2001	Derek
6,282,651	B1	8/2001	Ashe
6,282,657	B1	8/2001	Kaplan et al.
6,292,874	B1 *	9/2001	Barnett 711/153
6,301,646	B1	10/2001	Hostetter
6,314,409	B1	11/2001	Schneck et al.
6,321,314	B1	11/2001	Van Dyke
6,327,652	B1 *	12/2001	England et al. 713/2
6,330,670	B1 *	12/2001	England et al. 713/2
6,339,815	B1	1/2002	Feng et al.
6,339,816	B1	1/2002	Bausch
6,357,004	B1	3/2002	Davis
6,363,485	B1	3/2002	Adams et al.
6,374,317	B1	4/2002	Ajanovic et al.
6,378,068	B1	4/2002	Foster et al.
6,378,072	B1	4/2002	Collins et al.
6,389,537	B1	5/2002	Davis et al.
6,397,242	B1	5/2002	Devine et al.
6,397,379	B1	5/2002	Yates, Jr. et al.
6,412,035	B1	6/2002	Webber
6,421,702	B1	7/2002	Gulick

6,445,797	B1	9/2002	McGough et al.	
6,463,535	B1	10/2002	Drews et al.	
6,463,537	B1	10/2002	Tello	
6,499,123	B1	12/2002	McFarland et al.	
6,505,279	B1	1/2003	Phillips et al.	
6,507,904	B1	1/2003	Ellison et al.	
6,529,909	B1	3/2003	Bowman-Amuah	
6,535,988	B1	3/2003	Poisner	
6,557,104	B1	4/2003	Vu et al.	
6,560,627	B1	5/2003	McDonald et al.	
6,609,199	B1	8/2003	DeTreville	
6,615,278	B1 *	9/2003	Curtis	719/310
6,633,963	B1 *	10/2003	Ellison et al.	711/163
6,633,981	B1	10/2003	Davis	
6,651,171	B1	11/2003	England et al.	
6,678,825	B1 *	1/2004	Ellison et al.	713/200
6,684,326	B1	1/2004	Cromer et al.	
6,701,284	B1	3/2004	Huntley et al.	
2001/0021969	A1	9/2001	Burger et al.	
2001/0027527	A1	10/2001	Khidekel et al.	
2001/0037450	A1	11/2001	Melitski et al.	

FOREIGN PATENT DOCUMENTS

EP	0473913		3/1992
EP	0600112		8/1994
EP	0892521		1/1999
EP	0930567	A	7/1999
EP	0961193		12/1999
EP	0965902		12/1999
EP	1 030 237	A	8/2000
EP	1055989		11/2000
EP	1056014		11/2000
EP	1085396		3/2001
EP	1146715		10/2001
JP	11161521	A	6/1999
WO	WO9524696		9/1995
WO	WO 97/29567		8/1997
WO	WO9812620		3/1998
WO	WO983465	A	8/1998
WO	WO9844402		10/1998
WO	WO9905600		2/1999
WO	WO9909482		2/1999
WO	WO9918511		4/1999
WO	WO 99/38076		7/1999
WO	WO9957863		11/1999
WO	WO99/65579		12/1999
WO	02000076139	A	3/2000
WO	WO0021238		4/2000
WO	WO0062232		10/2000
WO	WO 01/27723	A	4/2001
WO	WO 01/27821	A	4/2001
WO	WO0163994		8/2001
WO	WO 01 75564	A	10/2001
WO	WO 01/75565		10/2001
WO	WO 01/75595		10/2001
WO	WO0175565		10/2001
WO	WO0175595		10/2001
WO	WO0201794		1/2002
WO	WO 02 17555	A	2/2002
WO	WO02060121		8/2002
WO	WO 02 086684	A	10/2002
WO	WO03058412		7/2003

OTHER PUBLICATIONS

"Intel 386 DX Microprocessor 32-Bit CHMOS Microprocessor with Integrated Memory Management", Dec. 31, 1995, Intel Inc., p. 32-56; figure 4-14.

Joe Heinrich:"MIPS R4000 Microprocessor User's Manual", 1994, MIPS Technology Inc., Mountain View, CA, pp. 67-79.

Berg C: "How Do I Create a Signed Applet?", Dr. Dobb's Journal, M&T Publ., Redwood City, CA, US, vol. 22, No. 8, 8 '97, p. 109-111, 122.

Goldberg, R, "Survey of virtual machine research," IEEE Computer Magazine 7(6), pp. 34-45, 1974.

Gum, P.H., "System/370 Extended Architecture: Facilities for Virtual Machines," IBM J. Research Development, vol. 27, No. 6, pp. 530-544, Nov. 1983.

Rosenblum, M., "Vmware's Virtual Platform: A Virtual Machine Monitor for Commodity PCs," Proceedings of the 11th Hotchips Conference, pp. 185-196, Aug. 1999.

Lawton, K., "Running Multiple Operating Systems Concurrently on an IA32 PC Using Virtualization Techniques," http://www.plex86.org/research/paper.txt; Nov. 29, 1999; pp. 1-31.

"Information Display Technique for a Terminate Stay Resident Program," IBM Technical Disclosure Bulletin, TDB-ACC-No. NA91 NA9112156, Dec. 1, 1991, pp. 156-158, vol. 34, Issue No. 7A.

Robin, John Scott and Irvine, Cynthia E., "Analysis of the Pentium's Ability to Support a Secure Virtual Machine Monitor," Proceedings of the 9th USENIX Security Symposium, Aug. 14, 2000, pp. 1-17. XP002247347, Denver, CO.

Karger, Paul A., et al., "A VMM Security Kernel for the VAX Architecture," Proceedings of the Symposium on Research in Security and Privacy, May 7, 1990, pp. 2-19, XP010020182, ISBN: 0-8186-2060-9, Boxborough, MA.

Chien, Andrew A., et al., "Safe and Protected Execution for the Morph/AMRM Reconfigurable Processor," 7th Annual IEEE Symposium, FCCM '99 Proceedings Apr. 21, 1999, pp. 209-221, XP010359180, ISBN: 0-7695-0375-6, Los Alamitos, CA.

Brands, Stefan , "Restrictive Blinding of Secret-Key Certificates", *Springer-Verlag XP002201306*, (1995), Chapter 3.

Davida, George I., et al., "Defending Systems Against Viruses through Cryptographic Authentication", *Proceedings of the Symposium on Security and Privacy*, IEEE Comp. Soc. Press, ISBN 0-8186-1939-2, (May 1989).

Kashiwagi, Kazuhiko , et al., "Design and Implementation of Dynamically Reconstructing System-Software", *Software Engineering Conference*, Proceedings 1996 Asia-Pacific Seoul, South Korea Dec. 4-7, 1996, Los Alamitos, CA USA, IEEE Comput. Soc, US, ISBN 0-8186-7638-8, (1996).

Luke, Jahn , et al., "Replacement Strategy for Aging Avionics Computers", *IEEE AES Systems Magazine*, XP002190614, (Mar. 1999).

Menezes, Oorschot , "Handbook of Applied Cryptography", *CRC Press LLC*, USA XP002201307, (1997), 475.

Richt, Stefan, et al., "In-Circuit-Emulator Wird Echtzeittauglich", *Elektronic, Franzis Verlag GMBH*, Munchen, DE, vol. 40 No. 16, XP00259620,(100-103),Aug. 6, 1991.

Saez, Sergio , et al., "A Hardware Scheduler for Complex Real-Time Systems", *Proceedings of the IEEE International Symposium on Industrial Electronics*, XP002190615, (Jul. 1999), 43-48.

Sherwood, Timothy , et al., "Patchable Instruction ROM Architecture", *Department of Computer Science and Engineering, University of California, San Diego, La Jolla, CA*, (Nov. 2001).

J. Heinrich: "MIPS R4000 Microprocessor User's Manual," Apr. 1, 1993, MIPS, Mt. View, XP002184449, pp. 61-97.

Colouris, George , et al., "Distributed Systems, Concepts and Designs", *2nd Edition*, (1994),422-424.
Crawford, John , "Architecture of the Intel 80386", *Proceedings of the IEEE International Conference on Computer Design; VLSI in Computers and Processors* (*ICCD '86*), (Oct. 6, 1986), 155-160.
Fabry, R.S. , "Capability-Based Addressing", *Fabry, R.S., "Capability-Based Addressing," Communications of the ACM*, vol. 17, No. 7, (Jul. 1974), 403-412.
Frieder, Gideon , "The Architecture And Operational Characteristics of the VMX Host Machine", *The Architecture And Operational Characteristics of the VMX Host Machine, IEEE*, (1982),9-16.
Intel Corporation, "IA-64 System Abstraction Layer Specification", *Intel Product Specification* Order No. 245359-001. (Jan. 2000), 1-112.
Intel Corporation, "Intel IA-64 Architecture Software Developer's Manual", vol. 2: IA-64 System Architecture, Order No. 245318-001, (Jan. 2000), i, ii, 5.1-5.3, 11.1-11.8, 11.23-11.26.
Menezes, Alfred J., et al., "Handbook of Applied Cryptography", *CRC Press Series on Discrete Mathematics and its Applications*, Boca Raton, FL, XP002165287, ISBN 0849385237, (Oct. 1996), 403-405, 506-515, 570.
Namba, S. , et al., "VM/4: ACOS-4 Virtual Machine Architecture", *VM/4 ACOS-4 Virtual Machine Architecture, IEEE*, (1985), 171-178.
RSA Security, "Hardware Authenticators", www.rsasecurity.com/node.asp?id=1158, 1-2.
RSA Security, "RSA SecurID Authenticators", www.rsasecurity.com/products/securid/datasheets/SID_DS_0103.pdf, 1-2.
RSA Security, "Software Authenticators", www.srasecurity.com/node.asp?id=1313, 1-2.
Schneier, Bruce , "Applied Cryptography: Protocols, Algorithm, and Source Code in C", *Wiley John & Sons, Inc.,* XP002939871; ISBN 0471117099, (Oct. 1995),47-52.
Schneier, Bruce , "Applied Cryptography: Protocols, Algorithm, and Source Code in C", *Wiley, John & Sons, Inc.,* XP002138607; ISBN 0471117099,(Oct. 1995), 56-65.
Schneier, Bruce , "Applied Cryptography: Protocols, Algorithms, and Source Code C", *Wiley, John & Sons, Inc.,* XP0021111449; ISBN 0471117099,(Oct. 1995), 169-187.
Schneier, Bruce , "Applied Cryptography: Protocols, Algorithms, and Source Code in C", *2nd Edition; Wiley, John & Sons, Inc.,* XP002251738; ISBN 0471128457,(Nov. 1995),28-33; 176-177; 216-217; 461-473; 518-522.

* cited by examiner

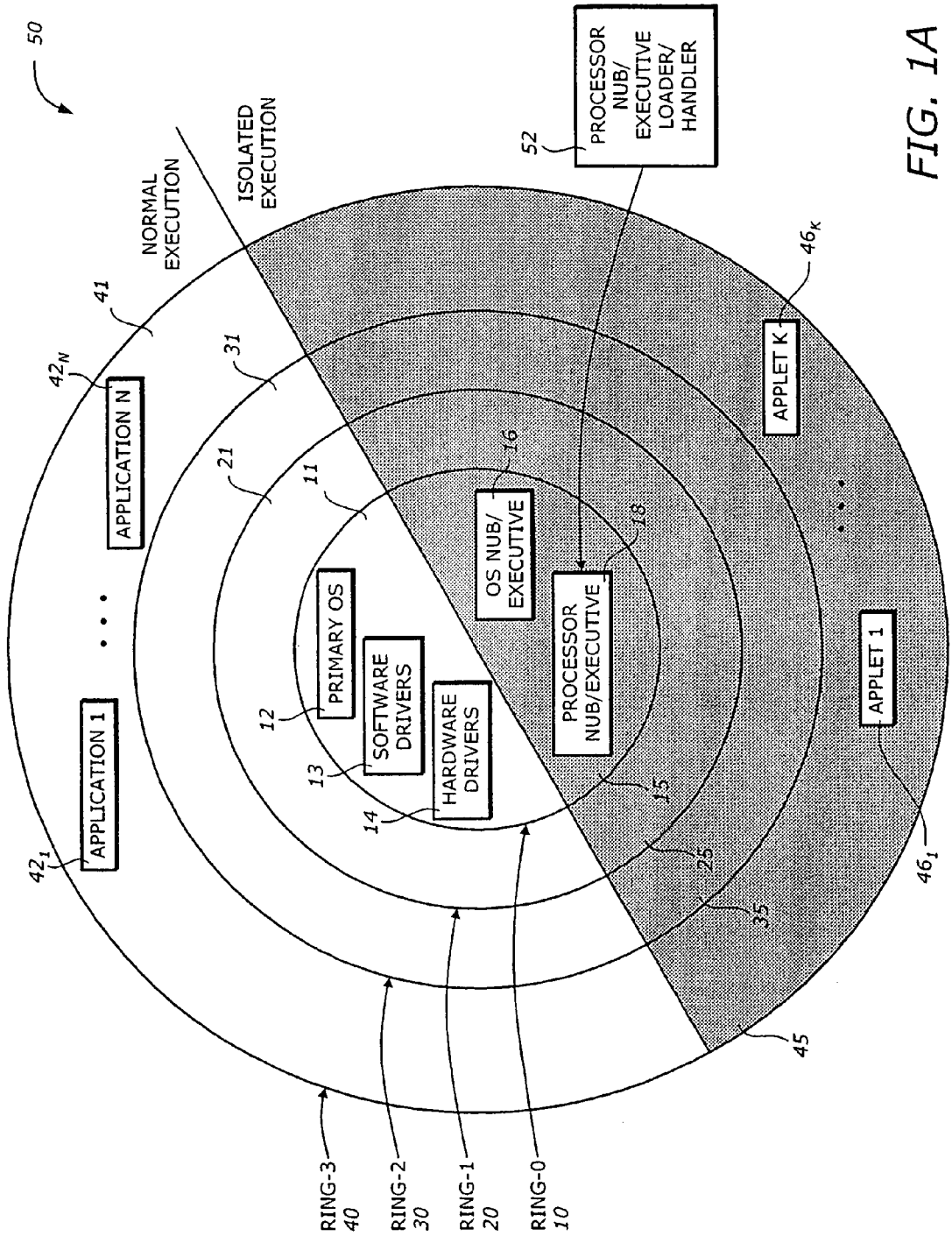
50
NORMAL EXECUTION
ISOLATED EXECUTION
PROCESSOR NUB/ EXECUTIVE LOADER/ HANDLER
52
41
31
21
11
42_N
APPLICATION N
APPLICATION 1
42_1
PRIMARY OS
12
SOFTWARE DRIVERS
13
HARDWARE DRIVERS
14
OS NUB/ EXECUTIVE
16
PROCESSOR NUB/EXECUTIVE
18
15
25
35
45
APPLET K
46_K
APPLET 1
46_1
RING-3 40
RING-2 30
RING-1 20
RING-0 10

FIG. 1A

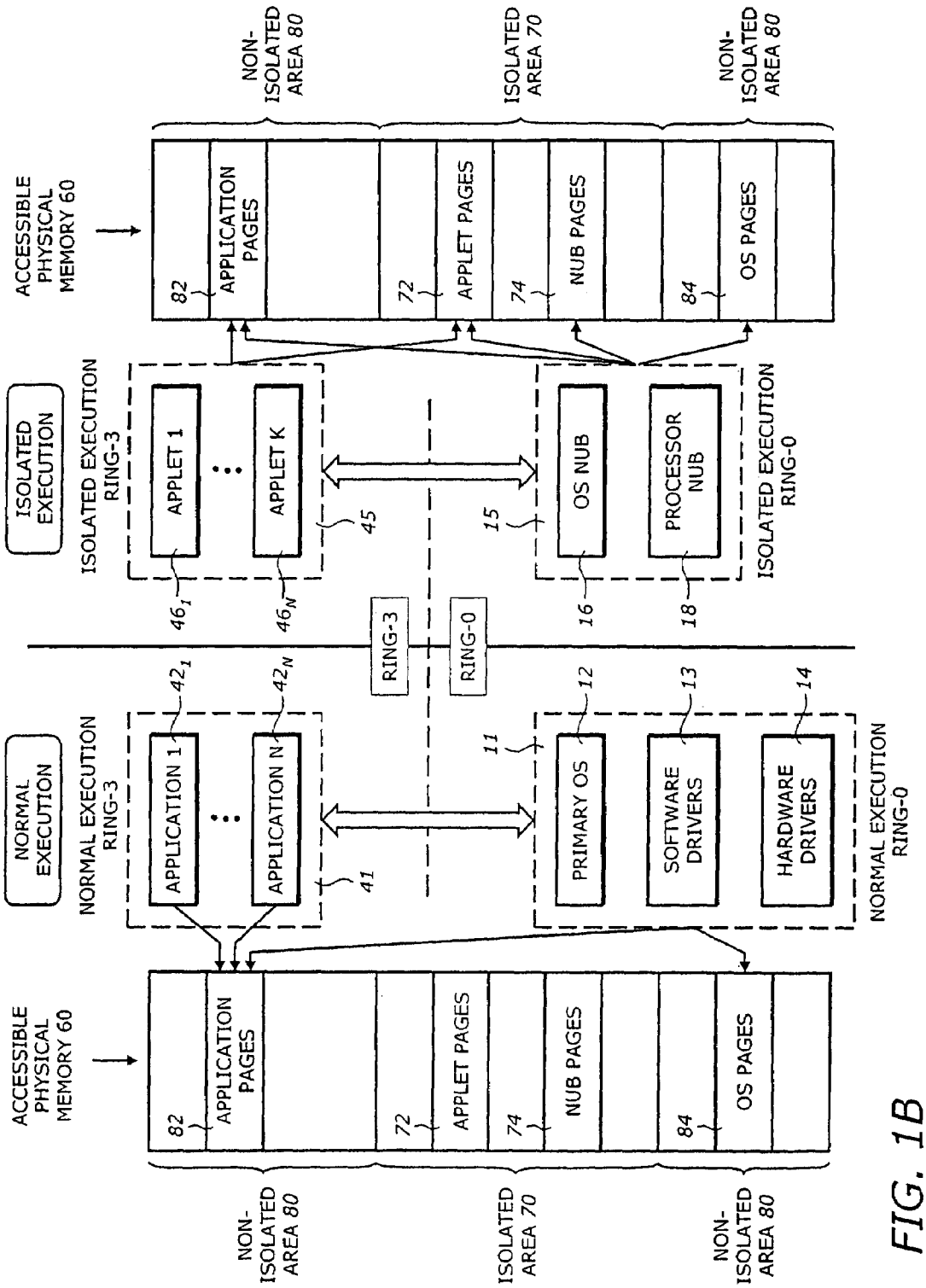
ACCESSIBLE PHYSICAL MEMORY 60
NON-ISOLATED AREA 80
ISOLATED AREA 70
NON-ISOLATED AREA 80
82
APPLICATION PAGES
72
APPLET PAGES
74
NUB PAGES
84
OS PAGES
ISOLATED EXECUTION
ISOLATED EXECUTION RING-3
APPLET 1
APPLET K
45
15
OS NUB
PROCESSOR NUB
ISOLATED EXECUTION RING-0
46₁
46ₙ
16
18
RING-3
RING-0
NORMAL EXECUTION
NORMAL EXECUTION RING-3
42₁
42ₙ
APPLICATION 1
APPLICATION N
41
11
12
13
14
PRIMARY OS
SOFTWARE DRIVERS
HARDWARE DRIVERS
NORMAL EXECUTION RING-0
ACCESSIBLE PHYSICAL MEMORY 60
82
APPLICATION PAGES
72
APPLET PAGES
74
NUB PAGES
84
OS PAGES
NON-ISOLATED AREA 80
ISOLATED AREA 70
NON-ISOLATED AREA 80

FIG. 1B

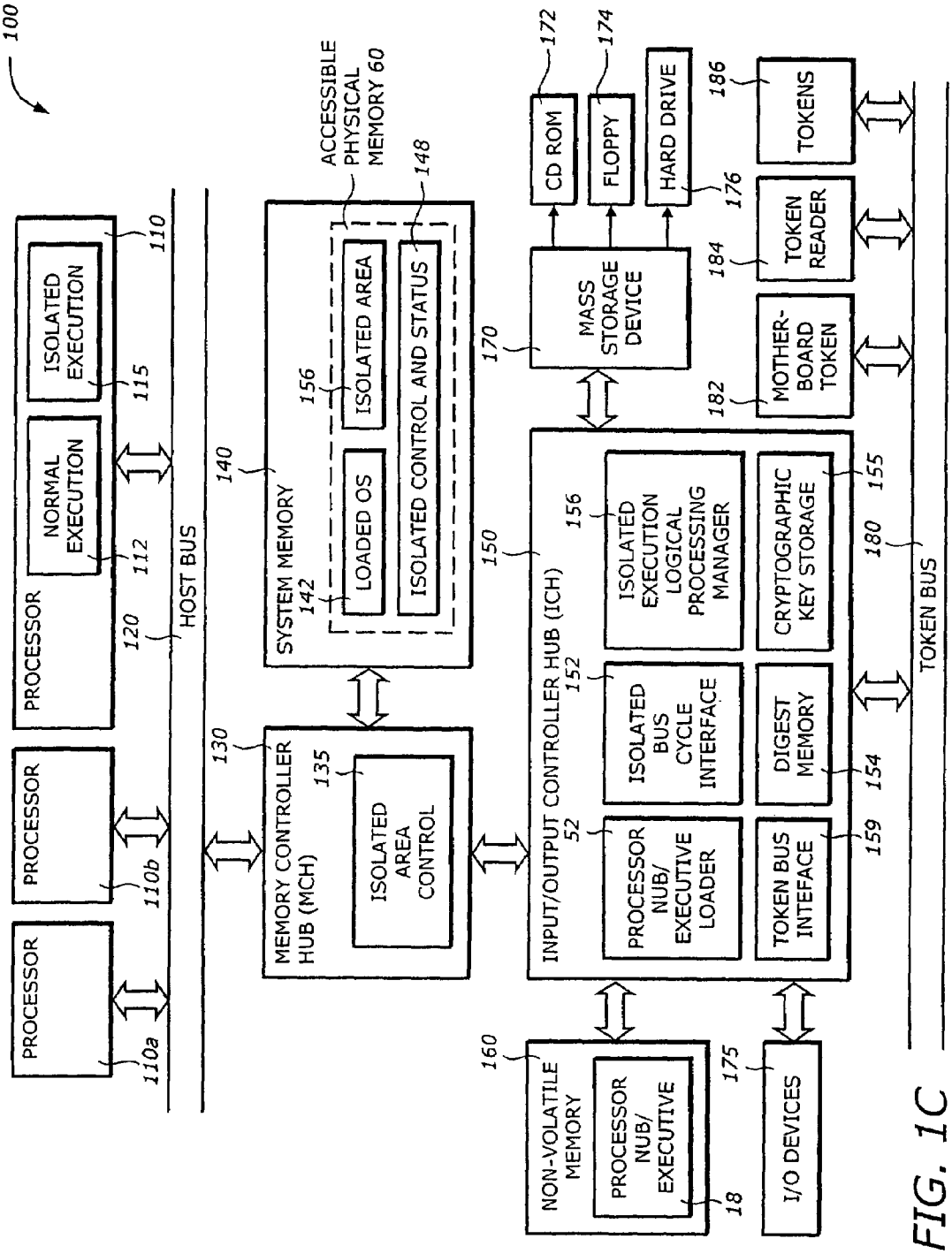
100
PROCESSOR
110a
PROCESSOR
110b
PROCESSOR
NORMAL EXECUTION
112
ISOLATED EXECUTION
115
110
120
HOST BUS
140
SYSTEM MEMORY
142
LOADED OS
156
ISOLATED AREA
ACCESSIBLE PHYSICAL MEMORY 60
148
ISOLATED CONTROL AND STATUS
130
MEMORY CONTROLLER HUB (MCH)
135
ISOLATED AREA CONTROL
150
INPUT/OUTPUT CONTROLLER HUB (ICH)
52
PROCESSOR NUB/ EXECUTIVE LOADER
152
ISOLATED BUS CYCLE INTERFACE
156
ISOLATED EXECUTION LOGICAL PROCESSING MANAGER
TOKEN BUS INTEFACE
159
DIGEST MEMORY
154
CRYPTOGRAPHIC KEY STORAGE
155
180
TOKEN BUS
170
MASS STORAGE DEVICE
172
CD ROM
174
FLOPPY
HARD DRIVE
176
182
MOTHER-BOARD TOKEN
184
TOKEN READER
186
TOKENS
160
NON-VOLATILE MEMORY
PROCESSOR NUB/ EXECUTIVE
18
175
I/O DEVICES

FIG. 1C

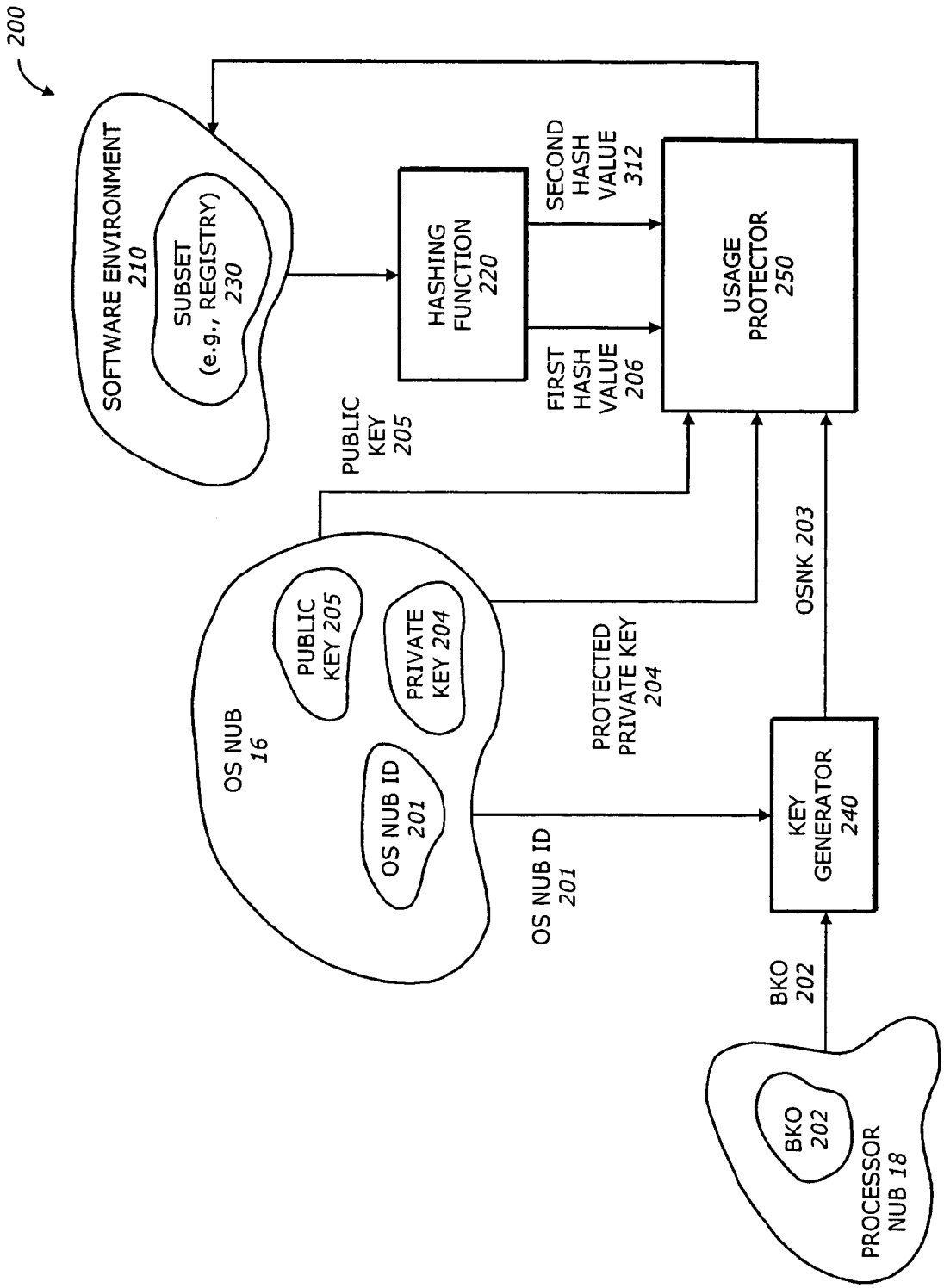
200
SOFTWARE ENVIRONMENT 210
SUBSET (e.g., REGISTRY) 230
HASHING FUNCTION 220
SECOND HASH VALUE 312
FIRST HASH VALUE 206
USAGE PROTECTOR 250
PUBLIC KEY 205
OS NUB 16
PUBLIC KEY 205
PRIVATE KEY 204
OS NUB ID 201
PROTECTED PRIVATE KEY 204
OSNK 203
OS NUB ID 201
KEY GENERATOR 240
BKO 202
BKO 202
PROCESSOR NUB 18

FIG. 2

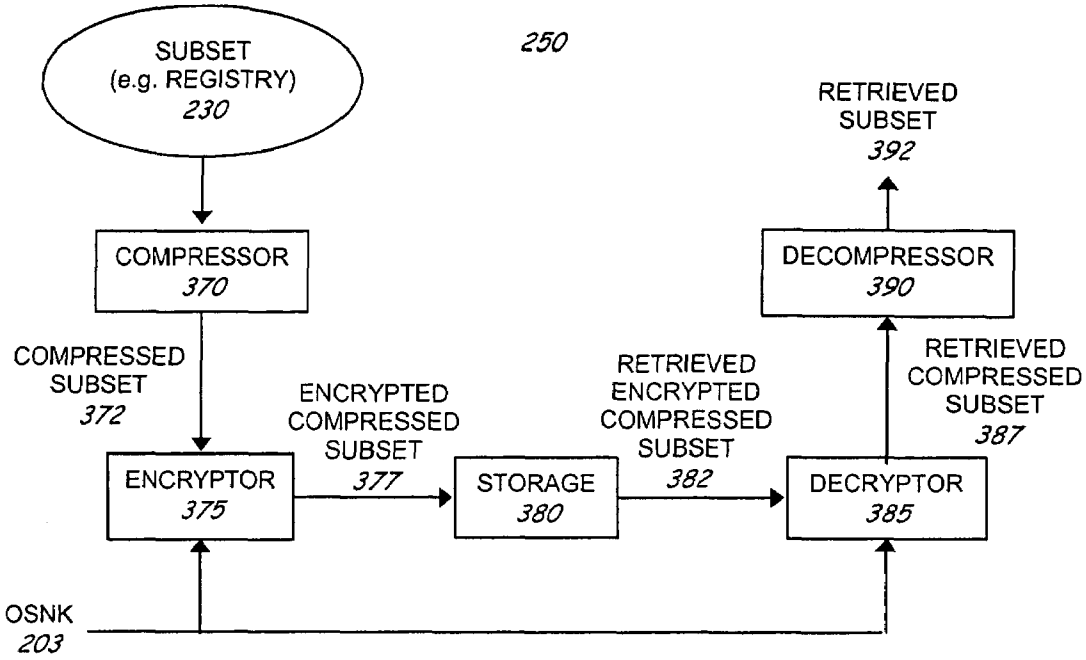
250
SUBSET
(e.g. REGISTRY)
230
COMPRESSOR
370
COMPRESSED
SUBSET
372
ENCRYPTOR
375
ENCRYPTED
COMPRESSED
SUBSET
377
STORAGE
380
RETRIEVED
ENCRYPTED
COMPRESSED
SUBSET
382
DECRYPTOR
385
RETRIEVED
COMPRESSED
SUBSET
387
DECOMPRESSOR
390
RETRIEVED
SUBSET
392
OSNK
203

FIGURE 3A

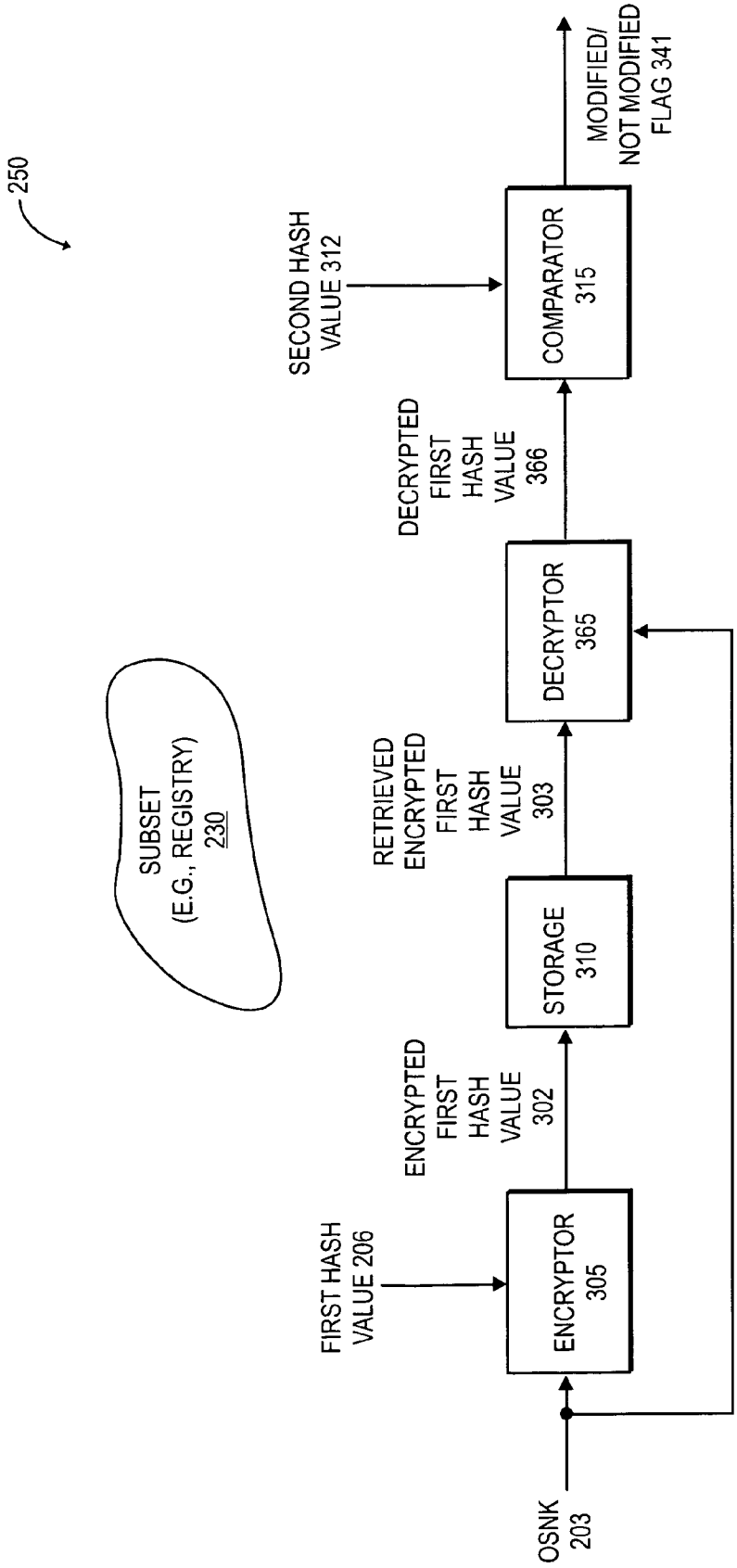
250
SUBSET
(E.G., REGISTRY)
230
OSNK
203
FIRST HASH
VALUE 206
ENCRYPTOR
305
ENCRYPTED
FIRST
HASH
VALUE
302
STORAGE
310
RETRIEVED
ENCRYPTED
FIRST
HASH
VALUE
303
DECRYPTOR
365
DECRYPTED
FIRST
HASH
VALUE
366
SECOND HASH
VALUE 312
COMPARATOR
315
MODIFIED/
NOT MODIFIED
FLAG 341

FIG. 3B

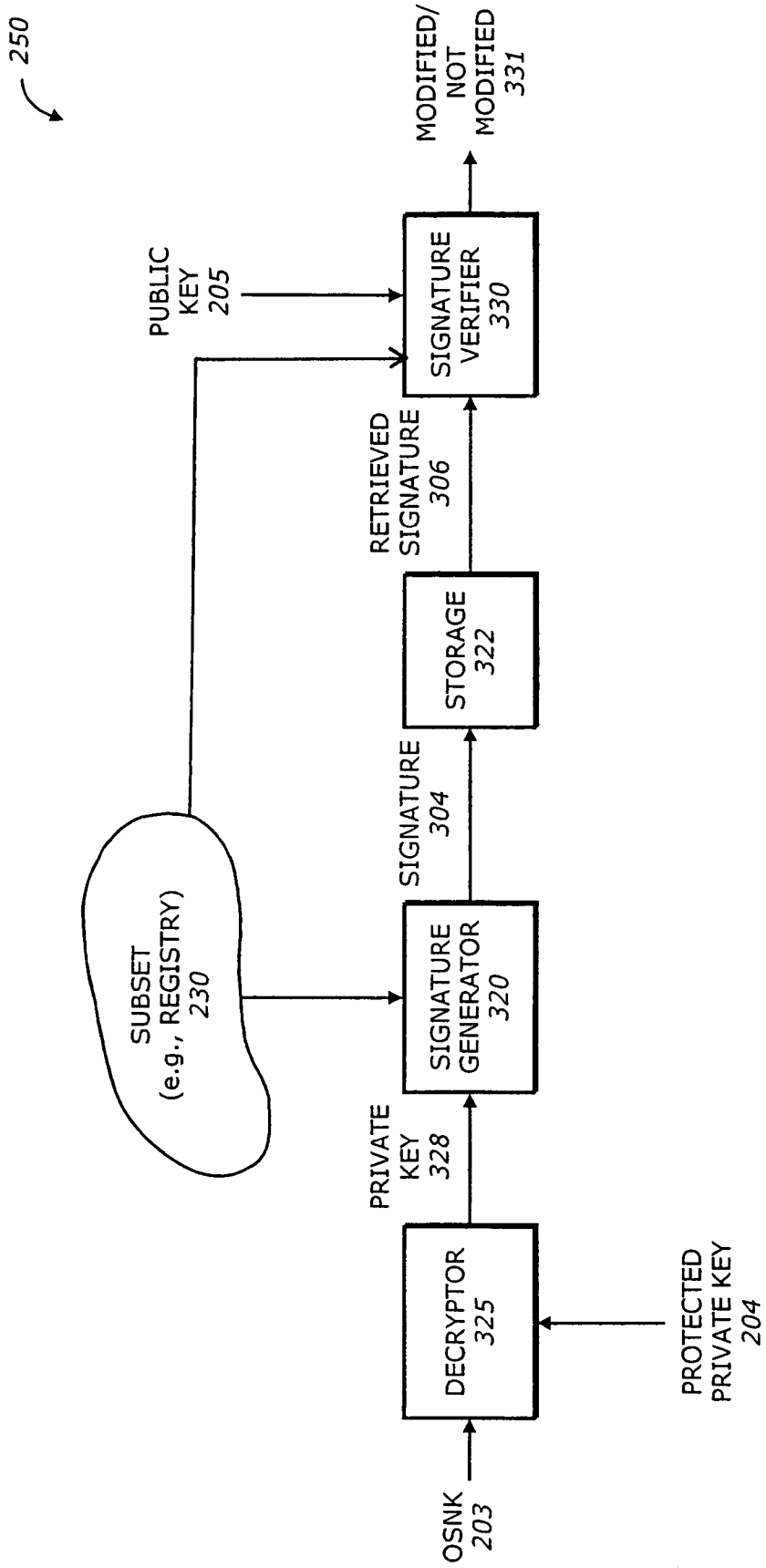
250
OSNK
203
DECRYPTOR
325
PROTECTED
PRIVATE KEY
204
PRIVATE
KEY
328
SUBSET
(e.g., REGISTRY)
230
SIGNATURE
GENERATOR
320
SIGNATURE
304
STORAGE
322
RETRIEVED
SIGNATURE
306
PUBLIC
KEY
205
SIGNATURE
VERIFIER
330
MODIFIED/
NOT
MODIFIED
331

FIG. 3C

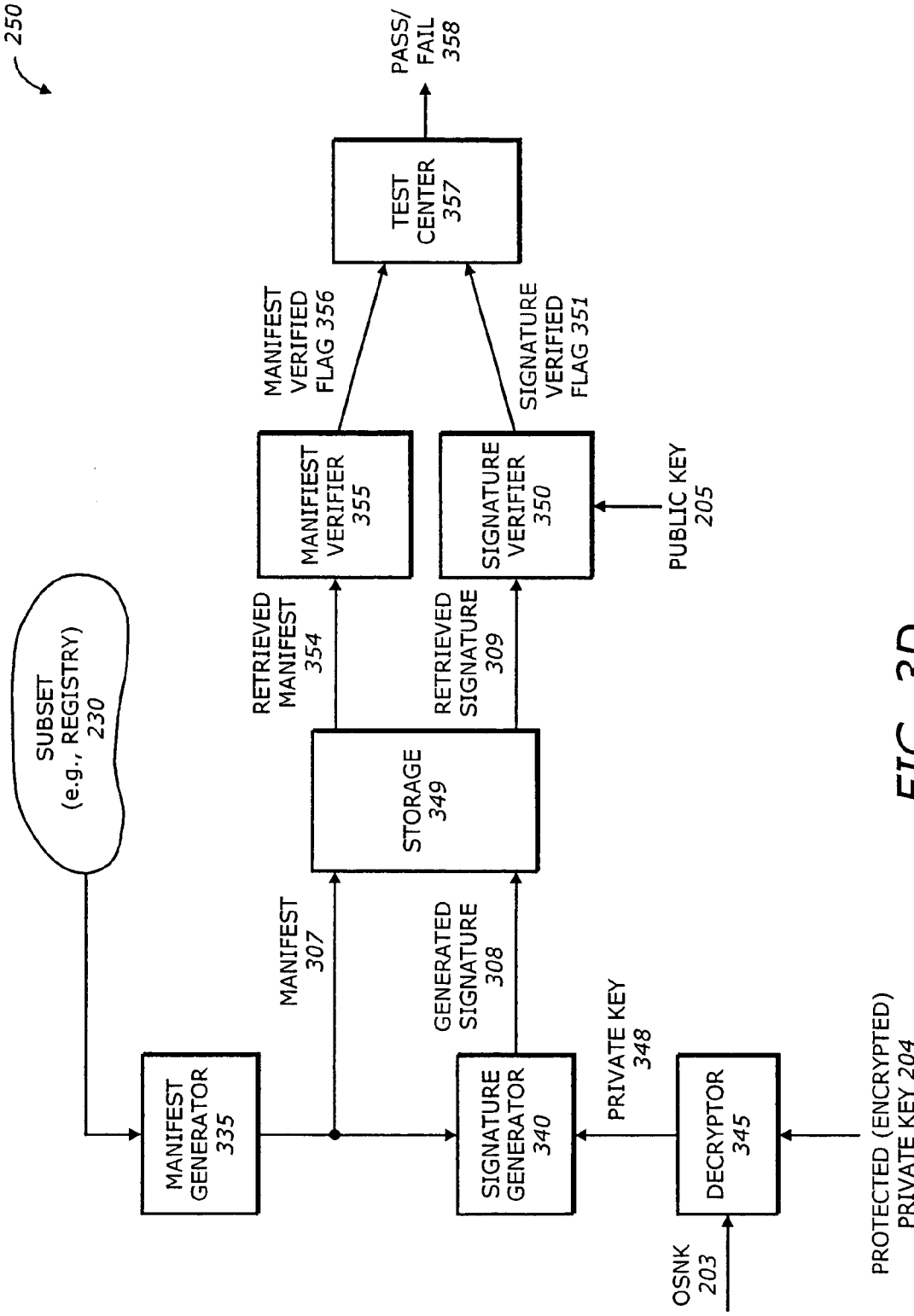
250
SUBSET (e.g., REGISTRY) 230
MANIFEST GENERATOR 335
MANIFEST 307
GENERATED SIGNATURE 308
STORAGE 349
RETRIEVED MANIFEST 354
RETRIEVED SIGNATURE 309
SIGNATURE GENERATOR 340
PRIVATE KEY 348
DECRYPTOR 345
OSNK 203
PROTECTED (ENCRYPTED) PRIVATE KEY 204
MANIFIEST VERIFIER 355
SIGNATURE VERIFIER 350
PUBLIC KEY 205
MANIFEST VERIFIED FLAG 356
SIGNATURE VERIFIED FLAG 351
TEST CENTER 357
PASS/ FAIL 358

FIG. 3D

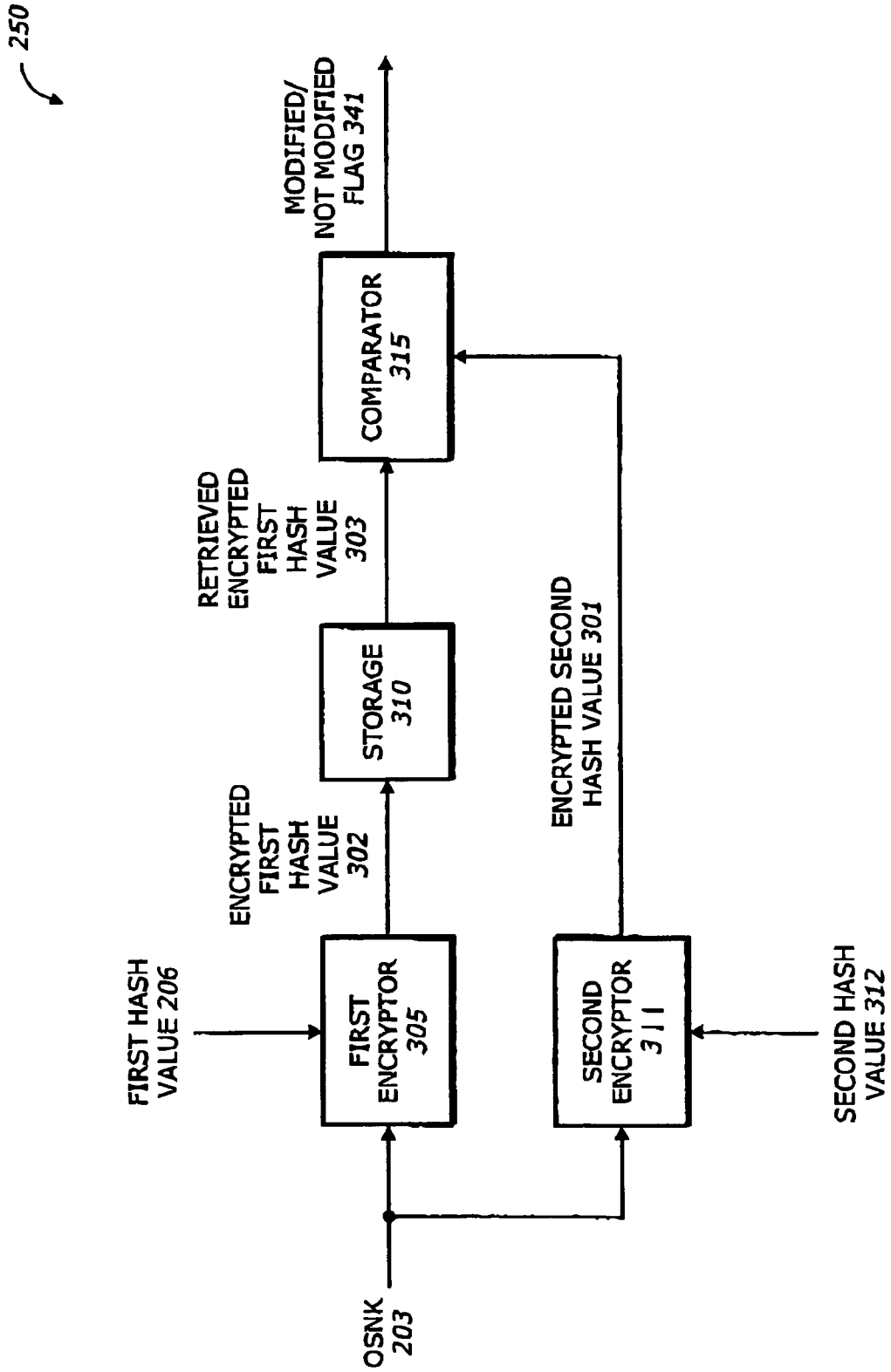
250
FIRST HASH VALUE 206
OSNK 203
FIRST ENCRYPTOR 305
ENCRYPTED FIRST HASH VALUE 302
STORAGE 310
RETRIEVED ENCRYPTED FIRST HASH VALUE 303
COMPARATOR 315
MODIFIED/ NOT MODIFIED FLAG 341
SECOND ENCRYPTOR 311
ENCRYPTED SECOND HASH VALUE 301
SECOND HASH VALUE 312

FIG. 3E

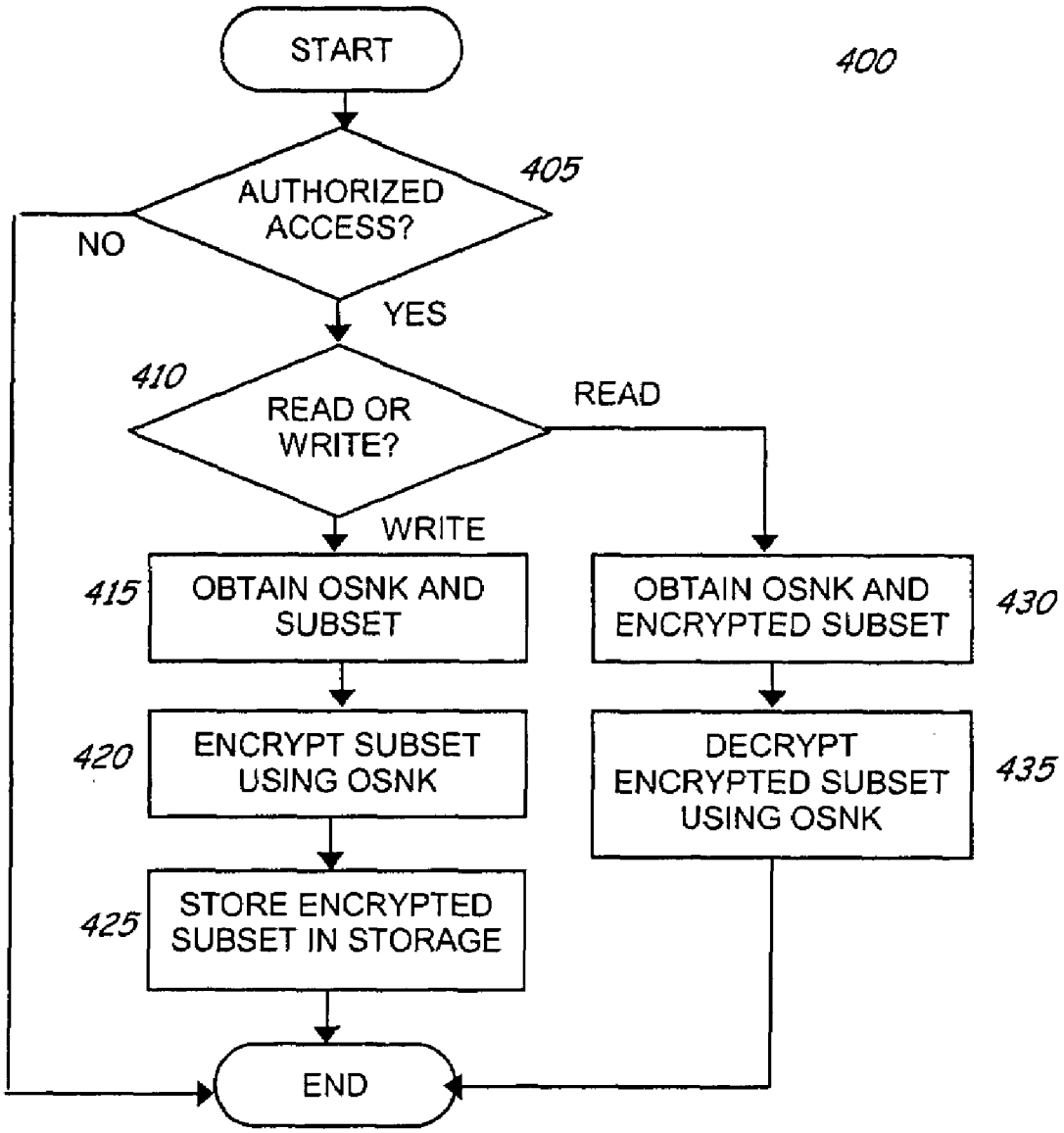
START
400
AUTHORIZED ACCESS?
405
NO
YES
410
READ OR WRITE?
READ
WRITE
415
OBTAIN OSNK AND SUBSET
OBTAIN OSNK AND ENCRYPTED SUBSET
430
420
ENCRYPT SUBSET USING OSNK
DECRYPT ENCRYPTED SUBSET USING OSNK
435
425
STORE ENCRYPTED SUBSET IN STORAGE
END

FIGURE 4

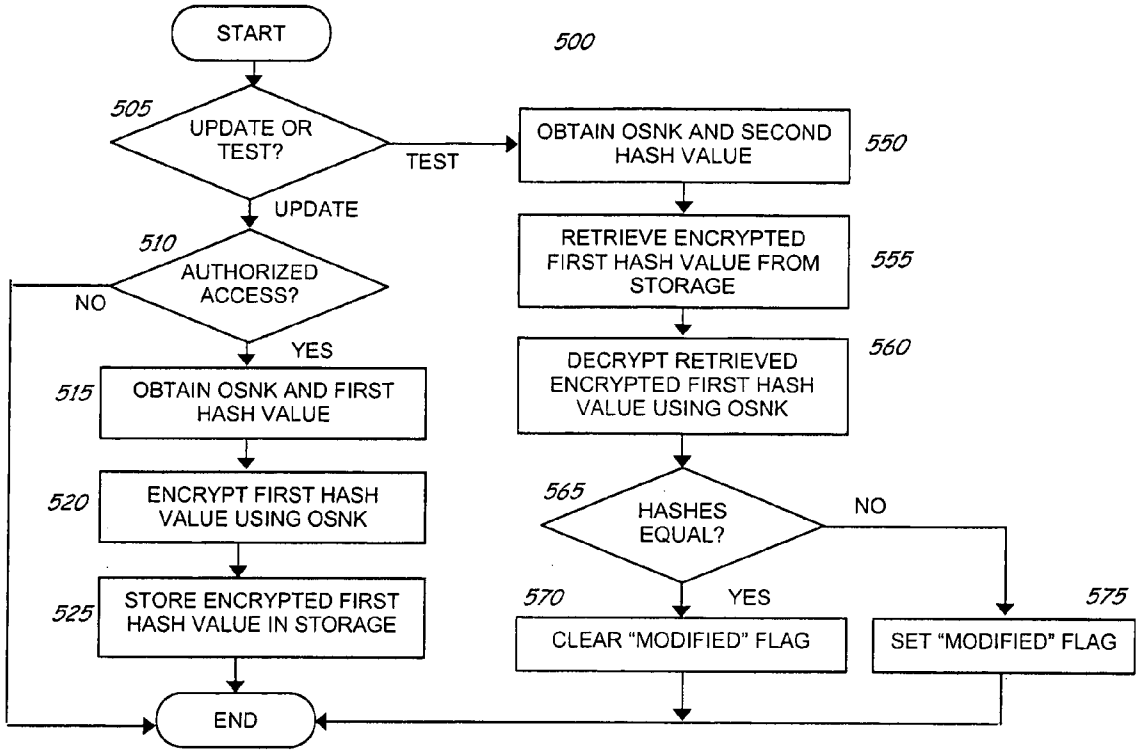
START
500
505
UPDATE OR TEST?
TEST
UPDATE
OBTAIN OSNK AND SECOND HASH VALUE
550
510
AUTHORIZED ACCESS?
NO
YES
RETRIEVE ENCRYPTED FIRST HASH VALUE FROM STORAGE
555
DECRYPT RETRIEVED ENCRYPTED FIRST HASH VALUE USING OSNK
560
515
OBTAIN OSNK AND FIRST HASH VALUE
520
ENCRYPT FIRST HASH VALUE USING OSNK
565
HASHES EQUAL?
NO
525
STORE ENCRYPTED FIRST HASH VALUE IN STORAGE
570
YES
575
CLEAR "MODIFIED" FLAG
SET "MODIFIED" FLAG
END

FIGURE 5

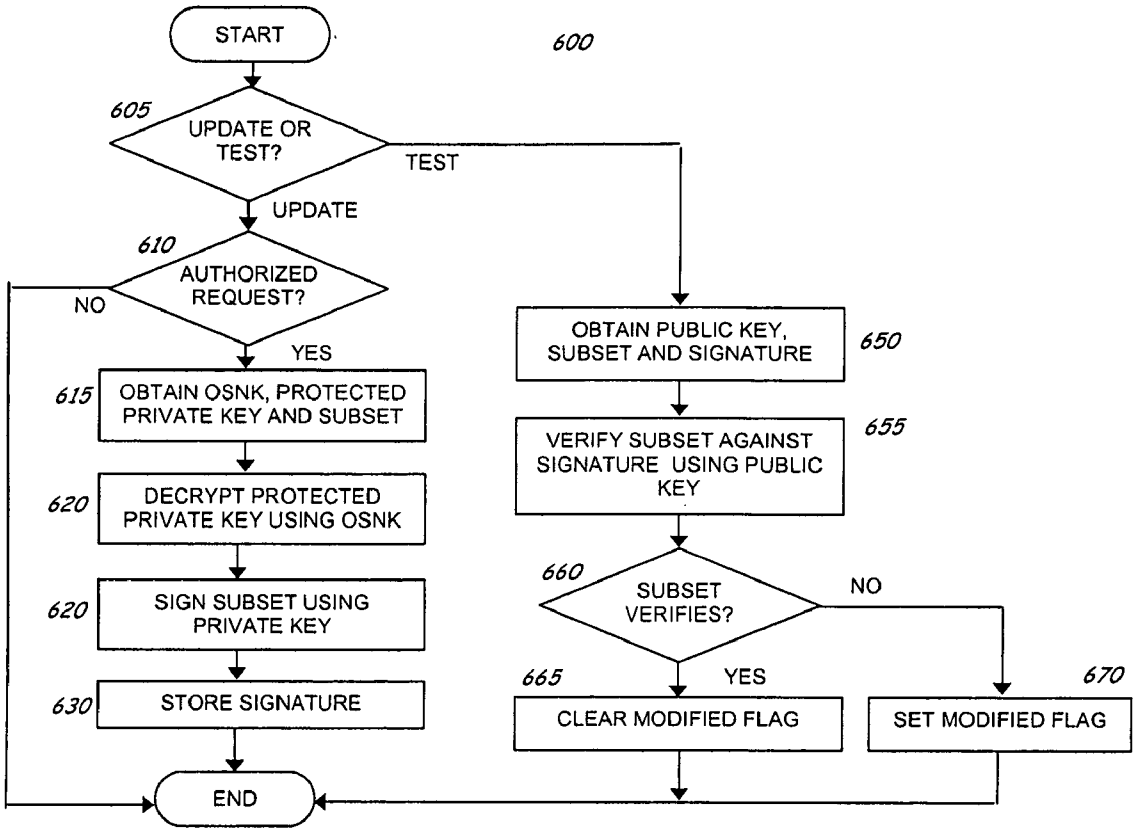
START
600
605
UPDATE OR TEST?
TEST
UPDATE
610
AUTHORIZED REQUEST?
NO
YES
615
OBTAIN OSNK, PROTECTED PRIVATE KEY AND SUBSET
620
DECRYPT PROTECTED PRIVATE KEY USING OSNK
620
SIGN SUBSET USING PRIVATE KEY
630
STORE SIGNATURE
END
OBTAIN PUBLIC KEY, SUBSET AND SIGNATURE
650
VERIFY SUBSET AGAINST SIGNATURE USING PUBLIC KEY
655
660
SUBSET VERIFIES?
NO
YES
665
CLEAR MODIFIED FLAG
670
SET MODIFIED FLAG

FIGURE 6

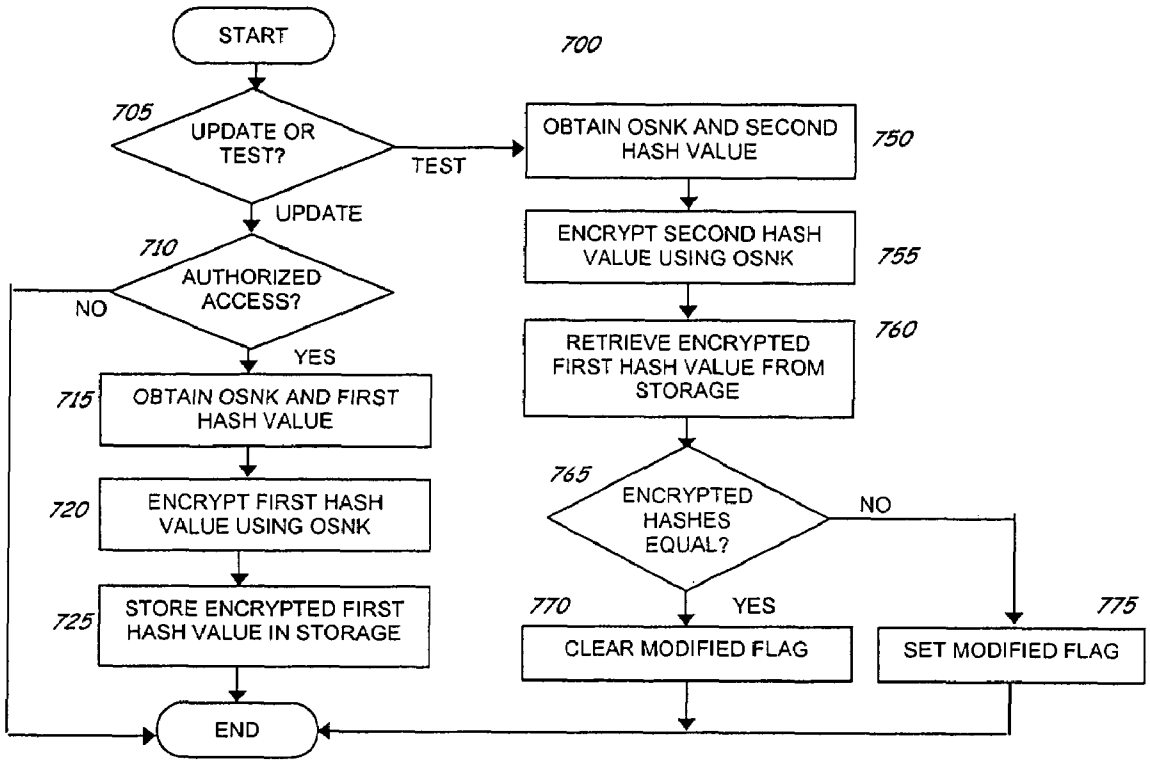
START
700
705
UPDATE OR TEST?
TEST
UPDATE
710
AUTHORIZED ACCESS?
NO
YES
715
OBTAIN OSNK AND FIRST HASH VALUE
720
ENCRYPT FIRST HASH VALUE USING OSNK
725
STORE ENCRYPTED FIRST HASH VALUE IN STORAGE
END
OBTAIN OSNK AND SECOND HASH VALUE
750
ENCRYPT SECOND HASH VALUE USING OSNK
755
RETRIEVE ENCRYPTED FIRST HASH VALUE FROM STORAGE
760
765
ENCRYPTED HASHES EQUAL?
NO
YES
770
CLEAR MODIFIED FLAG
775
SET MODIFIED FLAG

FIGURE 7

PROTECTING SOFTWARE ENVIRONMENT IN ISOLATED EXECUTION

CROSS-REFERENCES TO RELATED APPLICATIONS

This is a continuation-in-part of U.S. patent application Ser. No. 09/540,946 filed Mar. 31, 2000.

BACKGROUND

1. Field of the Invention

This invention relates to microprocessors. In particular, the invention relates to processor security.

2. Description of Related Art

Advances in microprocessor and communication technologies have opened up many opportunities for applications that go beyond the traditional ways of doing business. Electronic commerce (E-commerce) and business-to-business (B2B) transactions are now becoming popular, reaching the global markets at a fast rate. Unfortunately, while modem microprocessor systems provide users convenient and efficient methods of doing business, communicating and transacting, they are also vulnerable to unscrupulous attacks. Examples of these attacks include virus, intrusion, security breach, and tampering, to name a few. Computer security, therefore, is becoming more and more important to protect the integrity of the computer systems and increase the trust of users.

Threats caused by unscrupulous attacks may be in a number of forms. Attacks may be remote without requiring physical accesses. An invasive remote-launched attack by hackers may disrupt the normal operation of a system connected to thousands or even millions of users. A virus program may corrupt code and/or data of a single-user platform.

Existing techniques to protect against attacks have a number of drawbacks. Anti-virus programs can only scan and detect known viruses. Most anti-virus programs use a weak policy in which a file or program is assumed good until proved bad. For many security applications, this weak policy may not be appropriate. In addition, most anti-virus programs are used locally where they are resident in the platform. This may not be suitable in a group work environment. Security co-processors or smart cards using cryptographic or other security techniques have limitations in speed performance, memory capacity, and flexibility. Redesigning operating systems creates software compatibility issues and causes tremendous investment in development efforts.

BRIEF DESCRIPTION OF THE DRAWINGS

The features and advantages of the present invention will become apparent from the following detailed description of the present invention in which:

FIG. **1**A is a diagram illustrating a logical operating architecture according to one embodiment of the invention.

FIG. **1**B is a diagram illustrating accessibility of various elements in the operating system and the processor according to one embodiment of the invention.

FIG. **1**C is a diagram illustrating a computer system in which one embodiment of the invention can be practiced.

FIG. **2** is a diagram illustrating a secure platform according to one embodiment of the invention.

FIG. **3**A is a diagram illustrating a subset of a software environment having a usage protector according to one embodiment of the invention.

FIG. **3**B is a diagram illustrating a subset of a software environment having a usage protector according to another embodiment of the invention.

FIG. **3**C is a diagram illustrating the subset of a software environment according to yet another embodiment of the invention.

FIG. **3**D is a diagram illustrating the subset of a software environment according to yet another embodiment of the invention.

FIG. **3**E is a diagram illustrating the subset of a software environment according to yet another embodiment of the invention.

FIG. **4** is a flowchart illustrating a process to protect usage of a subset of a software environment according to one embodiment of the invention.

FIG. **5** is a flowchart illustrating the process to protect usage of the subset according to another embodiment of the invention.

FIG. **6** is a flowchart illustrating the process to protect usage of the subset according to yet another embodiment of the invention.

FIG. **7** is a flowchart illustrating a process to protect usage of the subset according to yet another embodiment of the invention.

DETAILED DESCRIPTION

In the following description, for purposes of explanation, numerous details are set forth in order to provide a thorough understanding of the present invention. However, it will be apparent to one skilled in the art that these specific details are not required in order to practice the present invention. In other instances, well-known electrical structures and circuits are shown in block diagram form in order not to obscure the present invention.

Architecture Overview

One principle for providing security in a computer system or platform is the concept of an isolated execution architecture. The isolated execution architecture includes logical and physical definitions of hardware and software components that interact directly or indirectly with an operating system of the computer system or platform. An operating system and the processor may have several levels of hierarchy, referred to as rings, corresponding to various operational modes. A ring is a logical division of hardware and software components that are designed to perform dedicated tasks within the operating system. The division is typically based on the degree or level of privilege, namely, the ability to make changes to the platform. For example, a ring-0 is the innermost ring, being at the highest level of the hierarchy. Ring-0 encompasses the most critical, privileged components. In addition, modules in Ring-0 can also access to lesser privileged data, but not vice versa. Ring-3 is the outermost ring, being at the lowest level of the hierarchy. Ring-3 typically encompasses users or applications level and has the least privilege. Ring-1 and ring-2 represent the intermediate rings with decreasing levels of privilege.

FIG. **1**A is a diagram illustrating a logical operating architecture **50** according to one embodiment of the invention. The logical operating architecture **50** is an abstraction of the components of an operating system and the processor. The logical operating architecture **50** includes ring-0 **10**, ring-1 **20**, ring-2 **30**, ring-3 **40**, and a processor nub loader

52. The processor nub loader **52** is an instance of an processor executive (PE) handler. The PE handler is used to handle and/or manage a processor executive (PE) as will be discussed later. The logical operating architecture **50** has two modes of operation: normal execution mode and isolated execution mode. Each ring in the logical operating architecture **50** can operate in both modes. The processor nub loader **52** operates only in the isolated execution mode.

Ring-0 **10** includes two portions: a normal execution Ring-0 **11** and an isolated execution Ring-0 **15**. The normal execution Ring-0 **11** includes software modules that are critical for the operating system, usually referred to as kernel. These software modules include primary operating system (e.g., kernel) **12**, software drivers **13**, and hardware drivers **14**. The isolated execution Ring-0 **15** includes an operating system (OS) nub **16** and a processor nub **18**. The OS nub **16** and the processor nub **18** are instances of an OS executive (OSE) and processor executive (PE), respectively. The OSE and the PE are part of executive entities that operate in a secure environment associated with the isolated area **70** and the isolated execution mode. The processor nub loader **52** is a protected bootstrap loader code held within a chipset in the system and is responsible for loading the processor nub **18** from the processor or chipset into an isolated area as will be explained later.

Similarly, ring-1 **20**, ring-2 **30**, and ring-3 **40** include normal execution ring-1 **21**, ring-2 **31**, ring-3 **41**, and isolated execution ring-1 **25**, ring-2 **35**, and ring-3 **45**, respectively. In particular, normal execution ring-**3** includes N applications $\mathbf{42}_1$ to $\mathbf{42}_N$ and isolated execution ring-3 includes K applets $\mathbf{46}_1$ to $\mathbf{46}_K$.

One concept of the isolated execution architecture is the creation of an isolated region in the system memory, referred to as an isolated area, which is protected by both the processor and chipset in the computer system. The isolated region may also be in cache memory, protected by a translation look aside (TLB) access check. Access to this isolated region is permitted only from a front side bus (FSB) of the processor, using special bus (e.g., memory read and write) cycles, referred to as isolated read and write cycles. The special bus cycles are also used for snooping. The isolated read and write cycles are issued by the processor executing in an isolated execution mode. The isolated execution mode is initialized using a privileged instruction in the processor, combined with the processor nub loader **52**. The processor nub loader **52** verifies and loads a ring-0 nub software module (e.g., processor nub **18**) into the isolated area. The processor nub **18** provides hardware-related services for the isolated execution.

One task of the processor nub **18** is to verify and load the ring-0 OS nub **16** into the isolated area, and to generate the root of a key hierarchy unique to a combination of the platform, the processor nub **18**, and the operating system nub **16**. The operating system nub **16** provides links to services in the primary OS **12** (e.g., the unprotected segments of the operating system), provides page management within the isolated area, and has the responsibility for loading ring-3 application modules **45**, including applets $\mathbf{46}_1$ to $\mathbf{46}_K$, into protected pages allocated in the isolated area. The operating system nub **16** may also load ring-0 supporting modules.

The operating system nub **16** may choose to support paging of data between the isolated area and ordinary (e.g., non-isolated) memory. If so, then the operating system nub **16** is also responsible for encrypting and hashing the isolated area pages before evicting the page to the ordinary memory, and for checking the page contents upon restoration of the page. The isolated mode applets $\mathbf{46}_1$ to $\mathbf{46}_K$ and their data are tamper-resistant and monitor-resistant from all software attacks from other applets, as well as from non-isolated-space applications (e.g., $\mathbf{42}_1$ to $\mathbf{42}_N$), dynamic link libraries (DLLs), drivers and even the primary operating system **12**. Only the processor nub **18** or the operating system nub **16** can interfere with or monitor the applet's execution.

FIG. **1**B is a diagram illustrating accessibility of various elements in the operating system **10** and the processor according to one embodiment of the invention. For illustration purposes, only elements of ring-0 **10** and ring-3 **40** are shown. The various elements in the logical operating architecture **50** access an accessible physical memory **60** according to their ring hierarchy and the execution mode. The accessible physical memory **60** includes an isolated area **70** and a non-isolated area **80**. The isolated area **70** includes applet pages **72** and nub pages **74**. The non-isolated area **80** includes application pages **82** and operating system pages **84**. The isolated area **70** is accessible only to elements of the operating system and processor operating in isolated execution mode. The non-isolated area **80** is accessible to all elements of the ring-0 operating system and to the processor.

The normal execution ring-0 **11** including the primary OS **12**, the software drivers **13**, and the hardware drivers **14**, can access both the OS pages **84** and the application pages **82**. The normal execution ring-3, including applications $\mathbf{42}_1$ to $\mathbf{42}_N$, can access only to the application pages **82**. Both the normal execution ring-0 **11** and ring-3 **41**, however, cannot access the isolated area **70**.

The isolated execution ring-0 **15**, including the OS nub **16** and the processor nub **18**, can access to both of the isolated area **70**, including the applet pages **72** and the nub pages **74**, and the non-isolated area **80**, including the application pages **82** and the OS pages **84**. The isolated execution ring-3 **45**, including applets $\mathbf{46}_1$ to $\mathbf{46}_K$, can access only to the application pages **82** and the applet pages **72**. The applets $\mathbf{46}_1$ to $\mathbf{46}_K$ reside in the isolated area **70**.

FIG. **1**C is a diagram illustrating a computer system **100** in which one embodiment of the invention can be practiced. The computer system **100** includes a processor **110**, a host bus **120**, a memory controller hub (MCH) **130**, a system memory **140**, an input/output controller hub (ICH) **150**, a non-volatile memory, or system flash, **160**, a mass storage device **170**, input/output devices **175**, a token bus **180**, a motherboard (MB) token **182**, a reader **184**, and a token **186**. The MCH **130** may be integrated into a chipset that integrates multiple functionalities such as the isolated execution mode, host-to-peripheral bus interface, memory control. Similarly, the ICH **150** may also be integrated into a chipset together or separate from the MCH **130** to perform I/O functions. For clarity, not all the peripheral buses are shown. It is contemplated that the system **100** may also include peripheral buses such as Peripheral Component Interconnect (PCI), accelerated graphics port (AGP), Industry Standard Architecture (ISA) bus, and Universal Serial Bus (USB), etc.

The processor **110** represents a central processing unit of any type of architecture, such as complex instruction set computers (CISC), reduced instruction set computers (RISC), very long instruction word (VLIW), or hybrid architecture. In one embodiment, the processor **110** is compatible with an Intel Architecture (IA) processor, such as the Pentium series, the IA-32™ and the IA-64™. The processor **110** includes a normal execution mode **112** and an isolated execution circuit **115**. The normal execution mode **112** is the mode in which the processor **110** operates in a non-secure environment, or a normal environment without the security

features provided by the isolated execution mode. The isolated execution circuit **115** provides a mechanism to allow the processor **110** to operate in an isolated execution mode. The isolated execution circuit **115** provides hardware and software support for the isolated execution mode. This support includes configuration for isolated execution, definition of an isolated area, definition (e.g., decoding and execution) of isolated instructions, generation of isolated access bus cycles, and generation of isolated mode interrupts.

In one embodiment, the computer system **100** can be a single processor system, such as a desktop computer, which has only one main central processing unit, e.g. processor **110**. In other embodiments, the computer system **100** can include multiple processors, e.g. processors **110**, **110***a*, **110***b*, etc., as shown in FIG. **1**C. Thus, the computer system **100** can be a multi-processor computer system having any number of processors. For example, the multi-processor computer system **100** can operate as part of a server or workstation environment. The basic description and operation of processor **110** will be discussed in detail below. It will be appreciated by those skilled in the art that the basic description and operation of processor **110** applies to the other processors **110***a* and **110***b*, shown in FIG. **1**C, as well as any number of other processors that may be utilized in the multi-processor computer system **100** according to one embodiment of the present invention.

The processor **110** may also have multiple logical processors. A logical processor, sometimes referred to as a thread, is a functional unit within a physical processor having an architectural state and physical resources allocated according to some partitioning policy. Within the context of the present invention, the terms "thread" and "logical processor" are used to mean the same thing. A multi-threaded processor is a processor having multiple threads or multiple logical processors. A multi-processor system (e.g., the system comprising the processors **110**, **110***a*, and **110***b*) may have multiple multi-threaded processors.

The host bus **120** provides interface signals to allow the processor **110** or processors **110**, **100***a*, and **110***b* to communicate with other processors or devices, e.g., the MCH **130**. In addition to normal mode, the host bus **120** provides an isolated access bus mode with corresponding interface signals for memory read and write cycles when the processor **110** is configured in the isolated execution mode. The isolated access bus mode is asserted on memory accesses initiated while the processor **110** is in the isolated execution mode. The isolated access bus mode is also asserted on instruction pre-fetch and cache write-back cycles if the address is within the isolated area address range and the processor **110** is initialized in the isolated execution mode. The processor **110** responds to snoop cycles to a cached address within the isolated area address range if the isolated access bus cycle is asserted and the processor **110** is initialized into the isolated execution mode.

The MCH **130** provides control and configuration of memory and input/output devices such as the system memory **140** and the ICH **150**. The MCH **130** provides interface circuits to recognize and service isolated access assertions on memory reference bus cycles, including isolated memory read and write cycles. In addition, the MCH **130** has memory range registers (e.g., base and length registers) to represent the isolated area in the system memory **140**. Once configured, the MCH **130** aborts any access to the isolated area that does not have the isolated access bus mode asserted.

The system memory **140** stores system code and data. The system memory **140** is typically implemented with dynamic random access memory (DRAM) or static random access memory (SRAM). The system memory **140** includes the accessible physical memory **60** (shown in FIG. **11**B). The accessible physical memory includes a loaded operating system **142**, the isolated area **70** (shown in FIG. **1**B), and an isolated control and status space **148**. The loaded operating system **142** is the portion of the operating system that is loaded into the system memory **140**. The loaded OS **142** is typically loaded from a mass storage device via some boot code in a boot storage such as a boot read only memory (ROM). The isolated area **70**, as shown in FIG. **1**B, is the memory area that is defined by the processor **110** when operating in the isolated execution mode. Access to the isolated area **70** is restricted and is enforced by the processor **110** and/or the MCH **130** or other chipset that integrates the isolated area functionalities. The isolated control and status space **148** is an input/output (I/O)-like, independent address space defined by the processor **110** and/or the MCH **130**. The isolated control and status space **148** contains mainly the isolated execution control and status registers. The isolated control and status space **148** does not overlap any existing address space and is accessed using the isolated bus cycles. The system memory **140** may also include other programs or data which are not shown.

The ICH **150** represents a known single point in the system having the isolated execution functionality. For clarity, only one ICH **150** is shown. The system **100** may have many ICH's similar to the ICH **150**. When there are multiple ICH's, a designated ICH is selected to control the isolated area configuration and status. In one embodiment, this selection is performed by an external strapping pin. As is known by one skilled in the art, other methods of selecting can be used, including using programmable configuring registers. The ICH **150** has a number of functionalities that are designed to support the isolated execution mode in addition to the traditional I/O functions. In particular, the ICH **150** includes an isolated bus cycle interface **152**, the processor nub loader **52** (shown in FIG. **1**A), a digest memory **154**, a cryptographic key storage **155**, an isolated execution logical processor manager **156**, and a token bus interface **159**.

The isolated bus cycle interface **152** includes circuitry to interface to the isolated bus cycle signals to recognize and service isolated bus cycles, such as the isolated read and write bus cycles. The processor nub loader **52**, as shown in FIG. **1**A, includes a processor nub loader code and its digest (e.g., hash) value. The processor nub loader **52** is invoked by execution of an appropriate isolated instruction (e.g., Iso_Init) and is transferred to the isolated area **70**. From the isolated area **80**, the processor nub loader **52** copies the processor nub **18** from the system flash memory (e.g., the processor nub code **18** in non-volatile memory **160**) into the isolated area **70**, verifies and logs its integrity, and manages a symmetric key used to protect the processor nub's secrets. In one embodiment, the processor nub loader **52** is implemented in read only memory (ROM). For security purposes, the processor nub loader **52** is unchanging, tamper-resistant and non-substitutable. The digest memory **154**, typically implemented in RAM, stores the digest (e.g., hash) values of the loaded processor nub **18**, the operating system nub **16**, and any other critical modules (e.g., ring-0 modules) loaded into the isolated execution space. The cryptographic key storage **155** holds a symmetric encryption/decryption key that is unique for the platform of the system **100**. In one embodiment, the cryptographic key storage **155** includes

internal fuses that are programmed at manufacturing. Alternatively, the cryptographic key storage **155** may also be created with a random number generator and a strap of a pin. The isolated execution logical processor manager **156** manages the operation of logical processors operating in isolated execution mode. In one embodiment, the isolated execution logical processor manager **156** includes a logical processor count register that tracks the number of logical processors participating in the isolated execution mode. The token bus interface **159** interfaces to the token bus **180**. A combination of the processor nub loader digest, the processor nub digest, the operating system nub digest, and optionally additional digests, represents the overall isolated execution digest, referred to as isolated digest. The isolated digest is a fingerprint identifying the ring-0 code controlling the isolated execution configuration and operation. The isolated digest is used to attest or prove the state of the current isolated execution.

The non-volatile memory **160** stores non-volatile information. Typically, the non-volatile memory **160** is implemented in flash memory. The non-volatile memory **160** includes the processor nub **18**. The processor nub **18** provides the initial set-up and low-level management of the isolated area **70** (in the system memory **140**), including verification, loading, and logging of the operating system nub **16**, and the management of the symmetric key used to protect the operating system nub's secrets. The processor nub **18** may also provide application programming interface (API) abstractions to low-level security services provided by other hardware. The processor nub **18** may also be distributed by the original equipment manufacturer (OEM) or operating system vendor (OSV) via a boot disk.

The mass storage device **170** stores archive information such as code (e.g., processor nub **18**), programs, files, data, applications (e.g., applications $\mathbf{42}_1$ to $\mathbf{42}_N$), applets (e.g., applets $\mathbf{46}_1$ to $\mathbf{46}_K$) and operating systems. The mass storage device **170** may include compact disk (CD) ROM **172**, floppy diskettes **174**, and hard drive **176**, and any other magnetic or optical storage devices. The mass storage device **170** provides a mechanism to read machine-readable media. When implemented in software, the elements of the present invention are the code segments to perform the necessary tasks. The program or code segments can be stored in a processor readable medium or transmitted by a computer data signal embodied in a carrier wave, or a signal modulated by a carrier, over a transmission medium. The "processor readable medium" may include any medium that can store or transfer information. Examples of the processor readable medium include an electronic circuit, a semiconductor memory device, a ROM, a flash memory, an erasable programmable ROM (EPROM), a floppy diskette, a compact disk CD-ROM, an optical disk, a hard disk, a fiber optical medium, a radio frequency (RF) link, etc. The computer data signal may include any signal that can propagate over a transmission medium such as electronic network channels, optical fibers, air, electromagnetic, RF links, etc. The code segments may be downloaded via computer networks such as the Internet, an Intranet, etc.

I/O devices **175** may include any I/O devices to perform I/O functions. Examples of I/O devices **175** include a controller for input devices (e.g., keyboard, mouse, trackball, pointing device), media card (e.g., audio, video, graphics), a network card, and any other peripheral controllers.

The token bus **180** provides an interface between the ICH **150** and various tokens in the system. A token is a device that performs dedicated input/output functions with security functionalities. A token has characteristics similar to a smart card, including at least one reserved-purpose public/private key pair and the ability to sign data with the private key. Examples of tokens connected to the token bus **180** include a motherboard token **182**, a token reader **184**, and other portable tokens **186** (e.g., smart card). The token bus interface **159** in the ICH **150** connects through the token bus **180** to the ICH **150** and ensures that when commanded to prove the state of the isolated execution, the corresponding token (e.g., the motherboard token **182**, the token **186**) signs only valid isolated digest information. For purposes of security, the token should be connected to the digest memory.

Protecting Software Environment in Isolated Execution

The overall architecture discussed above provides a basic insight into a hierarchical executive architecture to manage a secure platform. The elements shown in FIGS. **1**A, **1**B, and **1**C are instances of an abstract model of this hierarchical executive architecture. The implementation of this hierarchical executive architecture is a combination of hardware and software. In what follows, the processor executive, the processor executive handler, and the operating system executive are abstract models of the processor nub **18**, the processor nub loader **52**, and the operating system nub **16** (FIGS. **1**A, **1**B, and **1**C), respectively.

FIG. **2** is a diagram illustrating a secure platform **200** according to one embodiment of the invention. The secure platform **200** includes the OS nub **16**, the processor nub **18**, a key generator **240**, a hashing function **220**, and a usage protector **250**, all operating within the isolated execution environment, as well as a software environment **210** that may exist either inside or outside the isolated execution environment.

The OS nub or OS executive (OSE) **16** is part of the operating system running on the secure platform **200**. The OS nub **16** has an associated OS nub identifier (ID) **201**, that may be delivered with the OS nub **16** or derived from an OS nub code or associated information. The OS nub ID **201** may be a pre-determined code that identifies the particular version of the OS nub **16**. It may also represent a family of various versions of the OS nub **16**. The OS nub **16** may optionally have access to a public and private key pair unique for the platform **200**. The key pair may be generated and stored at the time of manufacturing, at first system boot, or later. The protected private key **204** may be programmed into the fuses of a cryptographic key storage **155** of the input/output control hub (ICH) **150** or elsewhere in persistent storage within the platform **200**. The protected private key **204** may be based upon a random number generated by an external random number generator. In one embodiment, the protected private key **204** is generated by the platform **200** itself the first time the platform **200** is powered up. The platform **200** includes a random number generator to create random numbers. When the platform **200** is first powered up, a random number is generated upon which the protected private key **204** is based. The protected private key **204** can then be stored in the multiple key storage **164** of the non-volatile flash memory **160**. The feature of the protected private key **204** is that it cannot be calculated from its associated public key **205**. Only the OS nub **16** can retrieve and decrypt the encrypted private key for subsequent use. In the digital signature generation process, the protected private key **204** is used as an encryption key to encrypt a digest of a message producing a signature, and the public key **205** is used as a decryption key to decrypt the signature, revealing the digest value.

The processor nub **18** includes a master binding key (BK**0**) **202**. The BK**0** **202** is generated at random when the

processor nub **18** is first invoked, i.e., when it is first executed on the secure platform **200**. The key generator **240** generates a key operating system nub key (OSNK) **203** which is provided only to the OS Nub **16**. The OS nub **16** may supply the OSNK **203** to trusted agents, such as the usage protector **250**. The key generator **240** receives the OS Nub identifier **201** and the BK**0** **202** to generate the OSNK **203**. There are a number of ways for the key generator **240** to generate the OSNK **203**. The key generator **240** generates the OSNK **203** by combining the BK**0** **202** and the OS Nub ID **201** using a cryptographic hash function. In one embodiment, the OS nub ID **201** identifies the OS nub **16** being installed into the secure platform **200**. The OS nub ID **201** can be the hash of the OS nub **16**, or a hash of a certificate that authenticates the OS nub **16**, or an ID value extracted from a certificate that authenticates the OS nub **16**. It is noted that a cryptographic hash function is a one-way function, mathematical or otherwise, which takes a variable-length input string, called a pre-image and converts it to a fixed-length, generally smaller, output string referred to as a hash value. The hash function is one-way in that it is difficult to generate a pre-image that matches the hash value of another pre-image. In one embodiment, the OS nub ID **201** is a hash value of one of the OS Nub **16** and a certificate representing the OS nub **16**. Since the security of an algorithm rests in the key, it is important to choose a strong cryptographic process when generating a key. The software environment **210** may include a plurality of subsets (e.g., subset **230**). The usage of the software environment **210** or the usage of the subset **230** is protected by the usage protector **250**. The usage protector **250** uses the OSNK **203** to protect the usage of the subset **230**. The software environment **210** may include an operating system (e.g., a Windows operating system, a Windows 95 operating system, a Windows 98 operating system, a Windows NT operating system, Windows 2000 operating system) or a data base. The subset **230** may be a registry in the Windows operating system or a subset of a database. Elements can be implemented in hardware or software.

The subset **230** is hashed by the hashing function **220** to produce a first hash value **206** and a second hash value **312**. One way to detect intrusion or modification of the subset **230** is to compare the state of the subset before and after a time period. The first and second hash values **206** and **312** are typically generated at different times and/or at different places.

The usage protector **250** is coupled to the key generator **240** to protect usage of the software environment **210** or the subset **230**, using the OSNK **203**. The usage protection includes protection against unauthorized reads, and detection of intrusion, tampering or unauthorized modification. If the two hash values are not the same, then the usage protector **250** knows that there is a change in the subset **230**. If it is known that this change is authorized and an updated hash value has been provided, the usage protector **250** would merely report the result. Otherwise, the usage protector **250** may generate an error or a fault function. When a user is notified of the error, fault condition, he or she would know that the subset **230** has been tampered, modified. The user may take appropriate action. Therefore, the usage of the subset **230** is protected.

The are several different embodiments of the usage protector **250**. In one embodiment, the usage protector **250** decrypts the subset using the OSNK **203**. In two other embodiments, the usage protector **250** uses not only the OSNK **203** but also the first hash value **206** and the second hash value **312**. Yet in two other embodiments, the usage protector uses the OSNK **203**, the protected private key **204** and the pubic key **205**.

FIG. **3**A is a diagram illustrating the usage protector **250** shown in FIG. **2** according to one embodiment of the invention. The usage protector **250** includes a compressor **370**, an encryptor **375**, a storage **380**, a decryptor **385**, and a decompressor **390**.

The compressor **370** receives the subset **230** and compresses the subset **230** to generate a compressed subset **372**. The encryptor **375** then encrypts the compressed subset **372** using the OSNK **203**, producing the encrypted compressed subset **377**. The OSNK **203** is provided to the usage protection **250** by the key generator **240** as shown in FIG. **2**. At a later time, a request can be made to the OS nub **16** to access the encrypted compressed subset **377**. If this request is granted, the decryptor **385** decrypts the retrieved encrypted compressed subset **382** using the OSNK **203**, producing the retrieved compressed subset **387**. The decompressor **390** then expands the retrieved compressed subset **387** to produce the retrieved subset **392**. The compression operation is applied to save time (i.e. speed up) and/or space for storing the subset **230** in a memory. In another embodiment, the encryptor **375** takes the subset **230** without going through the compressing process and encrypts the subset **230** to generate an encrypted subset using the OSNK **203**, and the decryptor **385** decrypts the retrieved encrypted subset directly producing the retrieved subset **392**. The encrypting of the compressed subset **372** or the subset **230** prevents unauthorized reads of the subset **230**.

FIG. **3**B is a diagram illustrating the usage protector **250** shown in FIG. **2** according to another embodiment of the invention. The usage protector **250** includes an encryptor **305**, a decryptor **365**, a storage medium **310**, and a comparator **315**.

The encryptor **305** encrypts the first hash value **206** using the OSNK **203** to generate an encrypted first hash value **302**. The encrypted first hash value **302** is then stored in the storage **310**. Storage medium **310** may be any type of medium capable of storing the encrypted hash value **302**. The storage medium **310** may be, for example, a tape or a disk (e.g., a floppy disk, a hard disk, or an optical disk). At a later time, the subset **230** is tested for integrity. The decryptor **365** decrypts the retrieved encrypted first hash value **303** using the OSNK **203**. This decrypting process generates a decrypted hash value **366**. This decrypted first hash value **366** is then compared to the second hash value **312** by the comparator **315** to detect if changes have been made in the subset **230**. If the two values match, then subset **230** has not been changed. If the subset **230** is deliberately updated by an authorized agent, the stored encrypted hash value is also updated, and a subsequent integrity test again results in the two hash values (**366** and **312**) matching. If the subset **230** is modified by an unauthorized agent that does not update the stored encrypted hash value, then the subsequent integrity test results in differing hash values **366** and **312**, signaling the unauthorized modification. The unauthorized agent cannot avoid this detection by attempting to generate its own version of the stored encrypted hash value, because the unauthorized agent does not have access to the OSNK **203**.

FIG. **3**C is a diagram illustrating the usage protector **250** shown in FIG. **2** according to one embodiment of the invention. The usage protector **250** includes a decryptor **325**, a signature generator **320**, a storage medium **322**, and a signature verifier **330**.

The decryptor **325** accepts the OS nub's encrypted private key (i.e., protected) **204**, and decrypts it using the OSNK **203**, exposing the private key **328** for use in the isolated environment. The signature generator **320** generates a signature **304** for the subset **230** using the private key **328**. It is noted that the subset **230** may be compressed before input it into the signature generator **320** to generate the signature **304**. The signature algorithm used by the signature generator **320** may be public-key digital signature algorithm which makes use of a secret private key to generate the signature, and a public key to verify the signature. Example algorithms include ElGama, Schnorr and Digital Signature Algorithms schemes just to name a few. In one embodiment, the generation of the signature **304** includes hashing the subset **230** to generate a before hash value, which is then encrypted using the private key **328** to generate the signature **304**. The signature **304** is then saved in a storage medium **322**. At a later time, the signature is retrieved from the storage **322**, and the retrieved signature **306** is used, along with public key **205**, by the signature verifier **330** to verify the subset **230**. The signature verifier **330** verifies whether the subset **230** has been modified, producing a modified/not-modified indicator **331**. In one embodiment, the verification process includes decrypting the retrieved signature **306** using the public key **205** to expose the before hash value. The subset **230** is hashed to generate an after hash value. The before hash value is compared to the after hash value to detect whether the subset **230** has been modified. If the two hash values match, the subset **230** is the same as it was when the signature was generated.

FIG. **3**D is a diagram illustrating the usage protector **250** according to yet another embodiment of the invention. The usage protector **250** includes a decryptor **345**, a manifest generator **335**, a signature generator **340**, a storage medium **349**, a signature verifier **350**, and a manifest verifier **355**.

The decryptor **345** accepts the OS nub's encrypted protected private key **204**, and decrypts it using the OSNK **203**, exposing the private key **348** for use in the isolated environment. The manifest generator **335** generates a manifest **307** for the subset **230**. The manifest **307** represents the subset **230** in a concise manner. The manifest **307** may include a number of descriptors or entities, which characterize some relevant aspects of the subset **230**. Typically, these relevant aspects are particular or specific to the subset **230** so that two different subsets have different manifests. In one embodiment, the manifest **307** represents a plurality of entities (i.e., a collection of entities) where each entry in the manifest **307** represents a hash (e.g., unique fingerprint) over one entity in the collection. The subset **230** is partitioned into one or more group where each group has a pointer and associated hash in the manifest **307**. The manifest **307** is stored in a storage medium **349** for later use. The manifest **307** is also input to the signature generator **340** to generate a signature **308** over the manifest **307** using the private key **348**. The generated signature **308** is also stored in a storage medium **349**. At a later time, we desire to verify that the portions of the subset **230** described by the manifest have not changed. This requires verifying that the manifest itself has not been changed, and that each group in subset **230** described by the manifest has not been changed. The stored signature and manifest are retrieved from the storage medium **349**. The retrieved signature **309**, and the retrieved manifest **354**, along with the public key **205**, are used by the signature verifier **350** to test that the retrieved manifest **354** is unchanged from the original manifest **307**. The signature verifier **350** produces a signature-verified flag **351**, which is asserted only if the signature verifies that the manifest is unchanged. In one embodiment, the verification process includes decrypting the retrieved signature **309** using the public key **205** to expose the before hash value. The retrieved manifest **354** is hashed to generate an after hash value. The before hash value is compared to the after hash value to detect whether the retrieved manifest **354** has been modified. If the two hash values match, the retrieved manifest **354** is the same as it was when the signature was generated. The retrieved manifest **354** is also supplied to the manifest verifier **355**, which uses the descriptive information in the retrieved manifest **354** to selectively verify portions of subset **230**. In a typical embodiment, this involves hashing each group in subset **230**, where the group is identified by information in the retrieved manifest **354**, and comparing the newly generated hash value against the hash value for the group stored in the retrieved manifest **354**. The manifest verifier **355** produces a manifest-verified flag **356**, which is asserted if all entries described by the retrieved manifest **354** are verified as unchanged. If both the manifest-verified flag and the signature-verified flag are asserted, then the overall verification process passes, and the selected portions of subset **230** are known to be the same as when the signed manifest was originally generated, and a pass/fail flag **358** is asserted. Note that the signature verifier **350** and the manifest verifier **355** can be invoked in any order.

FIG. **3**E is a diagram illustrating the usage protector **250** shown in FIG. **2** according to another embodiment of the invention. The usage protector **250** includes a first encryptor **305**, a second encryptor **311**, a storage medium **310**, and a comparator **315**.

The first encryptor **305** encrypts the first hash value **206** using the OSNK **203**. The first hash value **206** is provided by the hashing function **220** as shown in FIG. **2**. The first encryptor **305** takes the first hash value **206** and encrypts it to generate an encrypted first hash value **302** using the OSNK **203**. The encrypted hash value **302** is then stored in a storage **310** for later use. The encryption by the OSNK **203** allows the encrypted first hash value **302** to be stored in arbitrary (i.e., unprotected) storage media. Storage medium **310** may be any type of medium capable of storing information (e.g., the encrypted hash value **302**). The storage medium **310** may be, for example, a tape or a disk (e.g., a floppy disk, a hard disk, or an optical disk). The second encryptor **365 311** encrypts the second hash value **312** to generate an encrypted second hash value **301** using the OSNK **203**. The second hash value **312** is provided by the hash function **220**. The first encryptor **305** and the second encryptor **311** use the same encryption algorithm, and this algorithm produces identical repeatable results for a given input. The encrypted first hash value **302** is now retrieved from the storage **310** for comparing with the encrypted second hash value **301**. The comparator **315** compares the encrypted second hash value **301** with the retrieved encrypted first hash value **303** to detect if the subset **230** has been modified or tampered with. In the case where the subset **230** is deliberately updated by an authorized agent, the stored encrypted hash value is also updated. Since the modification of the subset **230** is authorized, the second encrypted hash value **301** is the same as the retrieved first encrypted first hash value **303**. In the case where the subset **230** has been unauthorized modified or tampered with, the comparator **315** generates a modified/not-modified flag indicating the subset **230** has been modified and therefore, the subset **230** should not be used. An attacker cannot simply replace the first encrypted hash value **303** with one corre-

sponding to the unauthorized modified subset **230**, because the attacker does not have access to the OSNK **203** used to encrypt the hash value.

FIG. **4** is a flowchart illustrating a process **400** to protect usage of the software environment **210** or subset **230** according to one embodiment of the invention.

Upon START, the process **400** checks to see whether accessing to the subset is authorized (Block **405**). If accessing to the subset is authorized, the process **400** is terminated. Otherwise, the process **400** checks to see if the accessing to the subset is a read or a write (Block **410**). If it is a write, the process **400** obtains the OSNK and the subset (Block **415**). The process **400** then encrypts the subset using the OSNK (Block **420**) and stores the encrypted subset in a storage (Block **425**), the process **400** is terminated. If accessing to the subset is a read, the process **400** obtains the OSNK and the encrypted subset (Block **430**). The process then decrypts the encrypted subset using the OSNK (Block **435**), the process **400** is the terminated.

FIG. **5** is a flowchart illustrating a process **500** to protect usage of the subset of the software environment according to one embodiment of the invention.

Upon START, the process **500** checks to see whether the subset is to be updated or to be tested (Block **505**). If it is to be updated, the process **500** checks to see whether accessing the subset is authorized (Block **510**). If accessing the subset is not authorized, the process **500** is terminated. If accessing the subset is authorized, the process **500** obtains the OSNK and the first hash value (Block **515**) and encrypts the first hash value using the OSNK (Block **520**). The process **500** then stores the encrypted first hash value in a storage for later use (Block **525**). The process is terminated. If the subset is to be tested, the process **500** then obtains the OSNK and the second hash value (Block **550**). The process **500** also retrieves the encrypted first hash value from the storage (Block **555**) and decrypts it using the OSNK (Block **560**). The process **500** then checks to see whether the two hash values are equal (Block **565**). If the two hash values are equal, the process **500** clears "modified" flag (Block **570**) and is terminated. Otherwise, the process **500** sets "modified" flag (Block **575**) and is terminated.

FIG. **6** is a flowchart illustrating a process to protect usage of a subset of a software environment according to yet another embodiment of the invention.

Upon START, the process **600** checks to see whether the subset is to be updated or to be tested (Block **605**). If it is to be updated, the process **600** checks to see whether the request to be updated is authorized (Block **610**). If it is not authorized, the process **600** is terminated. Otherwise, the process **600** obtains the OSNK, the protected private key and the subset (Block **615**). The process **600** then decrypts the protected private using the OSNK (Block **620**) and signs the subset using the private key (Block **625**). The process **600** stores the signature in a storage (Block **630**) and is terminated. If the subset is to be tested, the process **600** obtains the public key, the subset, and the signature (Block **650**). The process **600** verifies the subset against the signature using the public key (Block **655**). The process **600** then checks whether the subset is verified (Block **660**). If the subset is verified, the process **600** clears "modified" flag (Block **665**) and is terminated. Otherwise, the process **600** sets "modified" flag (Block **670**) and is terminated.

FIG. **7** is a flowchart illustrating a process **700** to protect usage of a subset of a software environment according to yet another embodiment of the invention.

Upon START, the process **700** checks to see whether the subset is to be updated or tested (Block **705**). If it is to be updated, the process **700** then checks to see whether the accessing to the subset is authorized (Block **710**). If it is not authorized, the process **700** is terminated. Otherwise, the process **700** obtains the OSNK and the first hash value (Block **715**) and encrypts the first hash value using the OSNK (Block **720**). The process then stores the encrypted first hash value in a storage (Block **725**) and is terminated. If the subset is to be tested, the process **700** obtains the OSNK and the second hash value (Block **750**) and encrypts the second hash value using the OSNK (Block **755**). The process **700** then retrieves the encrypted first hash value from the storage (Block **760**) and checks to see whether the encrypted hashes are equal (Block **765**). If they are equal, the process **700** clears "modified" flag and is terminated. Otherwise, the process **700** sets "modified" flag (Block **775**) and is terminated.

While this invention has been described with reference to illustrative embodiments, this description is not intended to be construed in a limiting sense. Various modifications of the illustrative embodiments, as well as other embodiments of the invention, which are apparent to persons skilled in the art to which the invention pertains are deemed to lie within the spirit and scope of the invention.

What is claimed is:

1. An apparatus comprising:

a key generator to generate an operating system nub key (OSNK) unique to an operating system (OS) nub, the OS nub being part of an operating system to run on a platform comprising a processor capable of operating in an isolated execution mode in a ring 0 operating mode, wherein the processor also supports one or more higher ring operating modes, as well as a normal execution mode in at least the ring 0 operating mode; and

a usage protector coupled to the key generator to protect usage of a subset of a software environment using the OSNK;

the key generator to generate the OSNK based at least in part on a master binding key (BK**0**) of the platform and an identification of the OS nub;

wherein the usage protector performs at least one operation selected from the group consisting of:

encrypting a value while operating in isolated execution mode; and

decrypting an encrypted value while operating in isolated execution mode.

2. The apparatus of claim **1**, wherein the identification comprises a hash value of at least one item selected from the group consisting of the OS nub and a certificate representing the OS nub.

3. The apparatus of claim **1** wherein the usage protector comprises:

an encryptor to encrypt the subset of the software environment using the OSNK, the encrypted subset being stored in a storage; and

a decryptor to decrypt the encrypted subset using the OSNK, the encrypted subset being retrieved from the storage.

4. The apparatus of claim **1** wherein the usage protector comprises:

an encryptor to encrypt a first hash value of the subset of the software environment using the OSNK, the encrypted first hash value being stored in a storage;

a decryptor to decrypt the encrypted first hash value using the OSNK, the encrypted first hash value being retrieved from the storage; and

a comparator to compare the decrypted first hash value to a second hash value to generate a compared result, the compared result indicating whether the subset of the software environment has been modified.

5. The apparatus of claim **1** wherein the usage protector comprises:

a first encryptor to encrypt a first hash value of the subset of the software environment using the OSNK, the encrypted first hash value being stored in a storage;

a second encryptor to encrypt a second hash value using the OSNK; and

a comparator to compare the encrypted second hash value to the encrypted first hash value to generate a compared result, the encrypted first hash value being retrieved from the storage, the compared result indicating whether the subset of the software environment has been modified.

6. The apparatus of claim **1** wherein the usage protector comprises:

a decryptor to decrypt a protected private key to generate a private key using the OSNK;

a signature generator coupled to the decryptor to generate a signature of the subset of the software environment using the private key, the signature being stored in a storage; and

a signature verifier to verify the signature to generate a modified/not modified flag using a public key, the signature being retrieved from the storage, the modified/not modified flag indicating whether the subset has been modified.

7. The apparatus of claim **1** wherein the usage protector comprises:

a manifest generator to generate a manifest of the subset of the software environment, the manifest describing the subset of the software environment, the manifest being stored in a storage;

a signature generator coupled to the manifest generator to generate a manifest signature using a private key, the private key being decrypted by a decryptor using the OSNK, the manifest signature being stored in the storage;

a signature verifier to verify the manifest signature to generate a signature verified flag using a public key, the manifest signature being retrieved from the storage; and

a manifest verifier to verify the manifest to generate a manifest verified flag, the manifest being retrieved from the storage, the manifest verified flag and the signature verified flag being tested at a test center, the test center generating a pass/fail signal to indicate whether the subset has been modified.

8. The apparatus of claim **1** wherein the subset of the software environment comprises a registry of an operating system.

9. The apparatus of claim **1**, wherein the BK**0** is generated at random on a first invocation of a processor nub.

10. A method comprising:

generating an operating system nub key (OSNK) unique to an operating system (OS) nub, the OS nub being part of an operating system to run in a software environment on a platform comprising a processor capable of operating in an isolated execution mode in a ring **0** operating mode, wherein the processor also supports one or more higher ring operating modes, as well as a normal execution mode in at least the ring **0** operating mode; and

protecting usage of a subset of the software environment using the OSNK;

wherein the operation of protecting usage of a subset of the software environment comprises at least one operation selected from the group consisting of:

encrypting a value while operating in isolated execution mode; and

decrypting an encrypted value while operating in isolated execution mode; and

wherein the operation of generating an OSNK comprises generating the OSNK based at least in part on an identification of the OS nub and a master binding key (BK**0**) of the platform.

11. The method of claim **10**, wherein the identification comprises a hash value of at least one item selected from the group consisting of the OS nub and a certificate representing the OS nub.

12. The method of claim **10** wherein protecting usage comprises:

encrypting the subset of the software environment using the OSNK;

storing the encrypted subset in a storage; and

decrypting the encrypted subset from the storage using the OSNK.

13. The method of claim **10** wherein protecting usage comprises:

encrypting a first hash value of the subset of the software environment using the OSNK, the encrypted first hash value being stored in a storage;

decrypting the encrypted first hash value of the subset of the software environment using the OSNK, the encrypted first hash value being retrieved from the storage; and

comparing the decrypted first hash value to a second hash value to generate a compared result, the decrypted first hash value being retrieved from the storage, the compared result indicating whether the subset of the software environment has been modified.

14. The method of claim **10** wherein protecting usage comprises:

encrypting a first hash value of the subset of the software environment using the OSNK, the encrypted first hash value being stored in a storage;

encrypting a second hash value using the OSNK; and

comparing the encrypted first hash value to the encrypted second hash value to generate a compared result, the encrypted first hash value being retrieved from the storage, the compared result indicating whether the subset of the software environment has been modified.

15. The method of claim **10** wherein protecting usage comprises:

decrypting a protected private key to generate a private key using the OSNK;

generating a signature of the subset of the software environment using the private key, the signature being stored in a storage; and

verifying the signature to generate a modified/not modified flag using a public key, the signature being retrieved from the storage, the modified/not modified flag indicating whether the subset of the software environment has been modified.

16. The method of claim 10 wherein detecting comprises:

generating a manifest of the subset of the software environment, the manifest describing the subset of the software environment, the manifest being stored in a storage;

generating a manifest signature of the manifest using a private key, the private key being decrypted using the OSNK, the manifest signature being stored in the storage;

verifying the manifest signature to generate a signature verified flag using a public key, the manifest signature being retrieved from the storage; and

verifying the manifest to generate a manifest verified flag, the manifest being retrieved from the storage, the manifest verified flag and the signature verified flag being tested at a test center, the test center generating a pass/fail signal, the pass/fail signal indicating whether the subset of the software environment has been modified.

17. The method of claim 10 wherein the subset of the software environment comprises a registry of the operating system.

18. The method of claim 10, wherein the BK0 is generated at random on a first invocation of a processor nub.

19. A computer program product comprising:

a computer usable medium having computer program code embodied therein, the computer program product having:

computer readable program code to generate an operating system nub key (OSNK) unique to an operating system (OS) nub, the OS nub being part of an operating system to run in a software environment on a platform comprising a processor capable of operating in an isolated execution mode in a ring 0 operating mode, wherein the processor also supports one or more higher ring operating modes, as well as a normal execution mode in at least the ring 0 operating mode; and

computer readable program code to protect usage of a subset of the software environment using the OSNK;

wherein the computer readable program code to generate the OSNK comprises computer readable program code to generate the OSNK based at least in part on an identification of the OS nub and a master binding key (BK0) of the platform; and

wherein the operation of protecting usage of a subset of the software environment comprises at least one operation selected from the group consisting of:

encrypting a value while operating in isolated execution mode; and

decrypting an encrypted value while operating in isolated execution mode.

20. The computer program product of claim 19, wherein the identification comprises a hash value of at least one item selected from the group consisting of the OS nub and a certificate representing the OS nub.

21. The computer program product of claim 19 wherein the computer readable program code for protecting usage comprises:

computer readable program code for encrypting the subset of the software environment using the OSNK;

computer readable program code for storing the encrypted subset; and

computer readable program code for decrypting the encrypted subset from the storage using the OSNK.

22. The computer program product of claim 19 wherein the computer readable program code for protecting usage comprises:

computer readable program code for encrypting a first hash value of the subset of the software environment using the OSNK, the encrypted first hash value being stored in a storage;

computer readable program code for decrypting the encrypted first hash value of the subset of the software environment using the OSNK, the encrypted first hash value being retrieved from the storage; and

computer readable program code for comparing the decrypted first hash value to a second hash value to generate a compared result, the decrypted first hash value being retrieved from the storage, the compared result indicating whether the subset of the software environment has been modified.

23. The computer program product of claim 19 wherein the computer readable program code for protecting usage comprises:

computer readable program code for encrypting a first hash value of the subset of the software environment using the OSNK, the encrypted first hash value being stored in a storage;

computer readable program code for encrypting a second hash value using the OSNK; and

computer readable program code for comparing the encrypted first hash value to the encrypted second hash value to generate a compared result, the encrypted first hash value being retrieved from the storage, the compared result indicating whether the subset of the software environment has been modified.

24. The computer program product of claim 19 wherein the computer readable program code for protecting usage comprises:

computer readable program code for decrypting a protected private key to generate a private key using the OSNK;

computer readable program code for generating a signature of the subset of the software environment using the private key, the signature being stored in a storage; and

computer readable program code for verifying the signature to generate a modified/not modified flag using a public key, the signature being retrieved from the storage, the modified/not modified flag indicating whether the software environment has been modified.

25. The computer program product of claim 19 wherein the computer readable program code for protecting usage comprises:

computer readable program code for generating a manifest of the subset of the software environment, the manifest being stored in a storage;

computer readable program code for generating a manifest signature of the manifest using a private key, the private key being decrypted using the OSNK, the manifest signature being stored in the storage;

computer readable program code for verifying the manifest signature to generate a signature verified flag using a public key, the manifest signature being retrieved from the storage; and

computer readable program code for verifying the manifest to generate a manifest verified flag, the manifest being retrieved from the storage, the manifest verified flag and the signature verified flag being tested at a test center, the test center generating a pass/fail signal, the pass/fail signal indicating whether the subset of the software environment has been modified.

26. The computer program product of claim 19 wherein the subset of the software environment comprises a registry of an operating system.

27. The computer program product of claim 19, wherein the BK0 is generated at random on a first invocation of a processor nub.

28. A system comprising:

a processor capable of operating in an isolated execution mode in a ring 0 operating mode, wherein the processor also supports one or more higher ring operating modes, as well as a normal execution mode in at least the ring 0 operating mode;

storage response to the processor, the storage storing at least a subset of a software environment to run on the system:

an operating system (OS) nub;

a key generator to generate an operating system nub key (OSNK) unique to the OS nub, based at least in part on an identification of the OS nub and a master binding key (BK**0**) of the system; and

a usage protector coupled to the key generator to protect usage of a subset of the software environment using the OSNK;

wherein the operation of protecting usage of a subset of the software environment comprises at least one operation selected from the group consisting of:

encrypting a value while operating in isolated execution mode; and

decrypting an encrypted value while operating in isolated execution mode.

29. The system of claim **28**, wherein the identification comprises a hash value of at least one item selected from the group consisting of the OS nub and a certificate representing the OS nub.

30. The system of claim **28** wherein the usage protector comprises:

an encryptor to encrypt the subset of the software environment using the OSNK, the encrypted subset being stored in a storage; and

a decryptor to decrypt the encrypted subset using the OSNK, the encrypted subset being retrieved from the storage.

31. The system of claim **28** wherein the usage protector comprises:

an encryptor to encrypt a first hash value of the subset of the software environment using the OSNK, the encrypted first hash value being stored in a storage;

a decryptor to decrypt the encrypted first hash value using the OSNK, the encrypted first hash value being retrieved from the storage; and

a comparator to compare the decrypted first hash value to a second hash value to generate a compared result, the compared result indicating whether the subset of the software environment has been modified.

32. The system of claim **28** wherein the usage protector comprises:

a first encryptor to encrypt a first hash value of the subset of the software environment using the OSNK, the encrypted first hash value being stored in a storage;

a second encryptor to encrypt a second hash value using the OSNK; and

a comparator to compare the encrypted second hash value to the encrypted first hash value to generate a compared result, the encrypted first hash value being retrieved from the storage, the compared result indicating whether the subset of the software environment has been modified.

33. The system of claim **28** wherein the usage protector comprises:

a decryptor to decrypt a protected private key to generate a private key using the OSNK;

a signature generator coupled to the decryptor to generate a signature of the subset of the software environment using the private key, the signature being stored in a storage; and

a signature verifier to verify the signature to generate a modified/not modified flag using a public key, the signature being retrieved from the storage, the modified/not modified flag indicating whether the subset of the software environment has been modified.

34. The system of claim **28** wherein the usage protector comprises:

a manifest generator to generate a manifest of the subset of the software environment, the manifest describing the subset of the software environment, the manifest being stored in a storage;

a signature generator coupled to the manifest generator to generate a manifest signature of the manifest using a private key, the private key being decrypted using the OSNK, the manifest signature being stored in the storage;

a signature verifier to verify the manifest signature to generate a signature verified flag using a public key, the manifest signature being retrieved from the storage; and

a manifest verifier to verify the manifest to generate a manifest verified flag, the manifest being retrieved from the storage, the manifest verified flag and the signature verified flag being tested by a test center, the test center generating a pass/fail signal indicating whether the subset has been modified.

35. The system of claim **28** wherein the subset of the software environment comprises a registry of an operating system.

36. The system of claim **28**, wherein the BK**0** is generated at random on a first invocation of a processor nub.

37. The system of claim **28**, further comprising:

a memory responsive to the processor, the memory to include an isolated memory area, the isolated memory area to be accessible to the processor in the isolated execution mode and inaccessible to the processor in the normal execution mode; and

the isolated memory area operable to receive the OS nub during a boot process.

38. An apparatus according to claim **1**, wherein:

the platform comprises a memory responsive to the processor, the memory to include an isolated memory area, the isolated memory area to be accessible to the processor in the isolated execution mode and inaccessible to the processor in the normal execution mode; and

the isolated memory area operable to receive the OS nub during a boot process.

39. A method according to claim **10**, wherein:

the platform comprises a memory responsive to the processor, the memory to include an isolated memory area, the isolated memory area to be accessible to the processor in the isolated execution mode and inaccessible to the processor in the normal execution mode; and

the method further comprises loading the OS nub into the isolated memory area during a boot process for the platform.

40. A computer program product according to claim **19**, comprising:

computer readable program code to load the OS nub into an isolated memory area of the platform during a boot process for the platform, the isolated memory area to reside in a memory responsive to the processor, the isolated memory area to be accessible to the processor in the isolated execution mode and inaccessible to the processor in the normal execution mode.

* * * * *