UNITED STATES PATENT AND TRADEMARK OFFICE

BEFORE THE PATENT TRIAL AND APPEAL BOARD

SAMSUNG ELECTRONICS CO. LTD., GOOGLE LLC,
and SAMSUNG ELECTRONICS AMERICA, INC.,
Petitioner,

v.

HEADWATER RESEARCH LLC,
Patent Owner.

IPR2024-00341
Patent 8,406,733 B2

Before HYUN J. JUNG, GARTH D. BAER, and RUSSELL E. CASS, *Administrative Patent Judges.*

JUNG, *Administrative Patent Judge*.

JUDGMENT
Final Written Decision
Determining All Challenged Claims Unpatentable
35 U.S.C. § 318(a)

I. INTRODUCTION

We have jurisdiction under 35 U.S.C. § 6 (2024). This Final Written Decision is issued pursuant to 35 U.S.C. § 318(a) and 37 C.F.R. § 42.73

TARGET 1062
TARGET V. HEADWATER
IPR2026-00154

(2024). For the reasons that follow, we determine that Samsung Electronics Co. Ltd., Google LLC, and Samsung Electronics America, Inc. (collectively, "Petitioner") have shown by a preponderance of the evidence that claims 1–17, 19, 21–27, 29, and 30 of U.S. Patent No. 8,406,733 B2 (Ex. 1001, "the '733 patent") are unpatentable.

A. Background and Summary

Petitioner filed a Petition (Paper 4, "Pet.") requesting institution of an *inter partes* review of claims 1–17, 19, 21–27, 29, and 30 of the '733 patent. Headwater Research LLC ("Patent Owner") did not file a Preliminary Response. Pursuant to 35 U.S.C. § 314, we instituted an *inter partes* review of claims 1–17, 19, 21–27, 29, and 30 of the '733 patent on all presented challenges. Paper 12 ("Inst. Dec."), 2, 21.

After institution, Patent Owner filed a Response (Paper 17, "PO Resp."), to which Petitioner filed a Reply (Paper 19, "Pet. Reply"), and Patent Owner thereafter filed a Sur-reply (Paper 21, "PO Sur-reply"). An oral hearing in this proceeding was held on May 5, 2025; a transcript of the hearing is included in the record.

B. Real Parties in Interest

Petitioner identifies Samsung Electronics Co. Ltd., Google LLC, and Samsung Electronics America, Inc. as real parties in interest. Pet. 79. Patent Owner identifies itself as the real party in interest. Paper 6, 2.

C. Related Matters

The parties identify *Headwater Research LLC v. Samsung Electronics Co., Ltd.*, 2:23-cv-00103 (E.D. Tex.) as a related matter. Pet. 79; Paper 6, 2. Petitioner states that the parties "are also involved in case nos. 2:22-cv-00422 and 2:22-cv-00467, also in E.D. Tex." Pet. 79. Patent Owner further identifies as a related matter IPR2024-00342. Paper 6, 2. A related patent is challenged in IPR2024-00010.

D. The '733 Patent (Ex. 1001)

The '733 patent issued on March 26, 2013 from an application filed on May 1, 2012 that is a continuation of an application filed on March 2, 2009 and claims priority to four provisional applications, the earliest of which was filed on January 28, 2009. Ex. 1001, codes (22), (45), (60), (63), 1:7–21.

Figure 16 of the '733 is below reproduced.

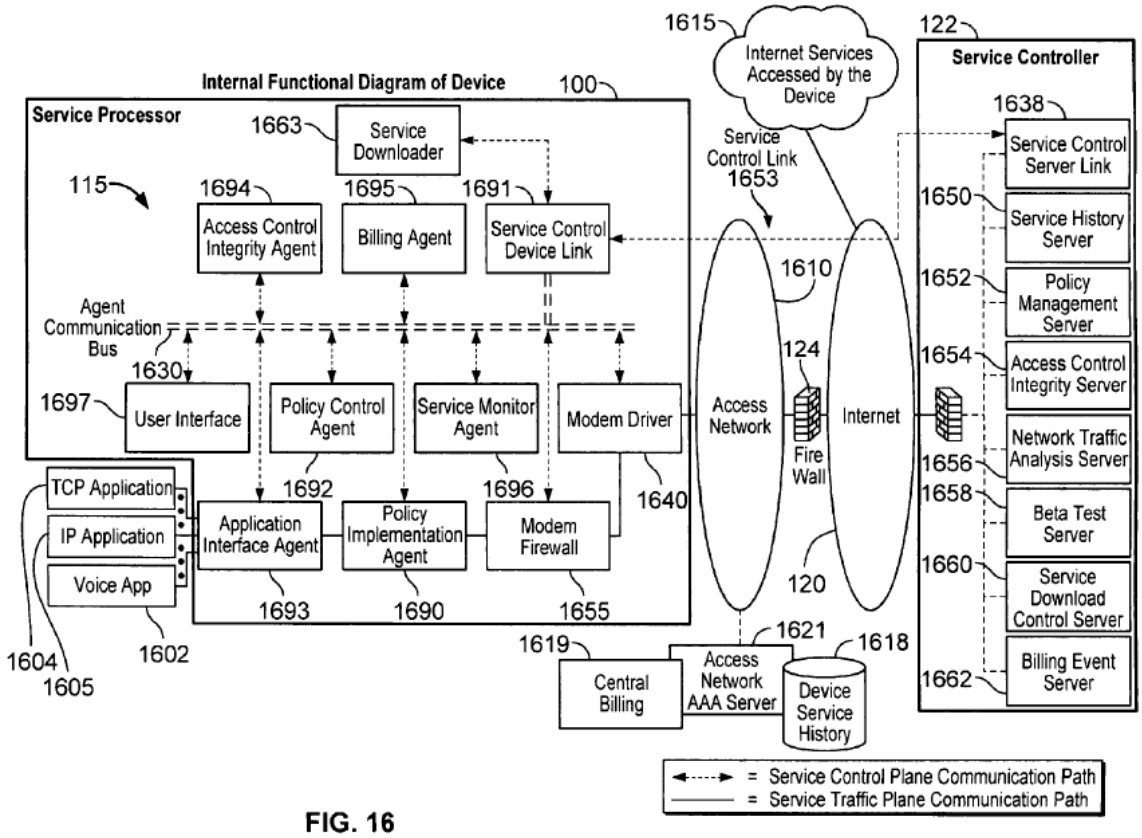

FIG. 16

Figure 16 shows "a functional diagram illustrating a device based service processor and a service controller." Ex. 1001, 2:43–44. The '733 patent describes "[d]evices and methods for receiving control-plane communications from a network element over a secure service control link." *Id.* at code (57).

> The network element includes a service control server link element that is communicatively coupled to a plurality of servers. The device includes a plurality of device agents

> communicatively coupled to a service control device link agent through an agent communication bus. The service control device link agent receives an encrypted agent message from the service control server link element over the secure service control link, uses an encryption key to obtain a decrypted agent message comprising a particular agent identifier and message content for delivery to the particular device agent, and, based on the particular agent identifier, delivers the message content to the particular device agent over the agent communication bus.

Id.

E. Illustrative Claim

The ’733 patent includes 30 claims, of which Petitioner challenges claims 1–17, 19, 21–27, 29, and 30. Of the challenged claims, claims 1 and 30 are independent, and reproduced below is claim 1.

> 1. An end-user device comprising:
>
> a modem for enabling communication with a network system over a service control link provided by the network system over a wireless access network, the service control link secured by an encryption protocol and configured to support control-plane communications between the network system and a service control device link agent on the end-user device;
>
> a plurality of device agents communicatively coupled to the service control device link agent through an agent communication bus, each of the plurality of device agents identifiable by an associated device agent identifier; and
>
> memory configured to store an encryption key, the encryption key shared between the service control device link agent and a service control server link element of the network system;
>
> wherein the service control device link agent is configured to:
>
> receive, over the service control link, an encrypted agent message from the service control server link element,
>
> using the encryption key, obtain a decrypted agent message, the decrypted agent message comprising a particular agent identifier and message content for delivery to a particular device agent of the plurality of device agents, the particular agent identifier identifying the particular device agent, the message content from a particular server of a plurality of servers

> communicatively coupled to the service control server link element, and
>
> based on the particular agent identifier, deliver the message content to the particular device agent over the agent communication bus.

Ex. 1001, 163:47–164:12.

F. Asserted Prior Art and Proffered Testimonial Evidence

Petitioner identifies the following references as prior art in the asserted ground of unpatentability:

Name	Reference	Exhibit
Ogawa	US 8,195,961 B2, issued June 5, 2012	1005
TS-23.140	3GPP TS 23.140 v6.9.0 (2005-03); 3rd Generation Partnership Project; Technical Specification Group Terminals; Multimedia Messaging Service (MMS); Functional Description; Stage 2 (Release 6)	1004

Petitioner contends that TS-23.140 is prior art under § 102(b) and Ogawa is prior art under §§ 102(a) and 102(e).[1] Pet. 1. Petitioner also provides a Declaration of Dr. Patrick G. Traynor. Ex. 1003. Patent Owner filed a deposition transcript for Dr. Traynor. Ex. 2003.

Petitioner further provides a Declaration of Freidhelm Rodermund (Ex. 1024) to opine on the authenticity and date of accessibility for TS-23.140 and a Declaration of June Ann Munford (Ex. 1052) to support that the excerpts from Operating System Concepts (Ex. 1045) are true and correct copies.

[1] The relevant sections of the Leahy-Smith America Invents Act ("AIA"), Pub. L. No. 112–29, 125 Stat. 284 (Sept. 16, 2011), took effect on March 16, 2013. Because the '733 patent issued from an application filed before that date, our citations to 35 U.S.C. §§ 102 and 103 in this Decision are to their pre-AIA versions. *See also* Pet. 5 (stating that "[t]he '733 Patent claims priority to a provisional application filed January 28, 2009 ('Critical Date')").

Patent Owner provides a Declaration of Dr. Michael C. Brogioli. Ex. 2001. Petitioner filed a deposition transcript for Dr. Brogioli from IPR2024-00010. Ex. 1051.

G. Asserted Ground

Petitioner asserts that claims 1–17, 19, 21–27, 29, and 30 are unpatentable on the following ground:

Claims Challenged	35 U.S.C. §	References/Basis
1–17, 19, 21–27, 29, 30	103(a)	TS-23.140, Ogawa

Pet. 1.

II. ANALYSIS

A. Legal Standards

"In an [*inter partes* review], the petitioner has the burden from the onset to show with particularity why the patent [claim] it challenges is unpatentable." *Harmonic Inc. v. Avid Tech., Inc.*, 815 F.3d 1356, 1363 (Fed. Cir. 2016). This burden of persuasion never shifts to Patent Owner. *Dynamic Drinkware, LLC v. Nat'l Graphics, Inc.*, 800 F.3d 1375, 1378 (Fed. Cir. 2015). To prevail in an *inter partes* review, the petitioner must support its challenges by a preponderance of the evidence. 35 U.S.C. § 316(e); 37 C.F.R. § 42.1(d).

Petitioner contends that the challenged claims of the '733 patent are unpatentable under § 103. Pet. 1. A claim is unpatentable under § 103 if the differences between the claimed subject matter and the prior art are such that the subject matter, as a whole, would have been obvious at the time the invention was made to a person having ordinary skill in the art to which said subject matter pertains. *KSR Int'l Co. v. Teleflex Inc.*, 550 U.S. 398, 406 (2007). The question of obviousness is resolved on the basis of underlying factual determinations, including: (1) the scope and content of the prior art;

(2) any differences between the claimed subject matter and the prior art; (3) the level of skill in the art; and (4) where in evidence, so-called secondary considerations. *Graham v. John Deere Co.*, 383 U.S. 1, 17–18 (1966). When evaluating a combination of teachings, we must also "determine whether there was an apparent reason to combine the known elements in the fashion claimed by the patent at issue." *KSR*, 550 U.S. at 418 (citing *In re Kahn*, 441 F.3d 977, 988 (Fed. Cir. 2006)).

B. Level of Ordinary Skill in the Art

Petitioner proposes that a person of ordinary skill in the art "would have had (1) at least a bachelor's degree in computer science, electrical engineering, or a related field, and (2) 3–5 years of experience in services and application implementation in communication networks," and that "[a]dditional graduate education could substitute for professional experience, and vice versa." Pet. 2 (citing Ex. 1003 ¶¶ 1–15, 21, 22). We preliminarily adopted Petitioner's proposal. Inst. Dec. 7.

Patent Owner responds that Petitioner's proposed level of ordinary skill in the art is "too vague," because, by its own words, three years of experience is sufficient but asserts "3–5 years of experience" and the alternative that "'[a]dditional graduate education could substitute for professional experience, and vice versa' also lacks clarity." PO Resp. 5 (citing Pet. 2).

For purposes of its Response, "Patent Owner agrees that a person having a bachelor's degree in computer science, electrical engineering, or a related field, plus at least three years of experience in services and application implementation in communication networks qualifies as a [person of ordinary skill in the art]" and that "three years of additional experience can be in either a professional setting or a research setting." PO Resp. 5 (citing Ex. 2001 ¶¶ 29–31).

Petitioner replies that its "analysis is unchanged," under Patent Owner's proposed level of ordinary skill, which encompasses Petitioner's proposal. Pet. Reply 4 (citing Pet. 2; PO Resp. 5).

Based on the full record, we find that Patent Owner's proposed level of ordinary skill in the art is consistent with the '733 patent and the asserted prior art. PO Resp. 5 (citing Ex. 2001 ¶¶ 29–31). We agree with Petitioner that Patent Owner's proposal is encompassed by Petitioner's proposed level of ordinary skill in the art. Pet. Reply 4. Our analysis below would not change, if we used Petitioner's proposal.

C. Claim Construction

In an *inter partes* review, the claims are construed:

> using the same claim construction standard that would be used to construe the claim in a civil action under 35 U.S.C. [§] 282(b), including construing the claim in accordance with the ordinary and customary meaning of such claim as understood by one of ordinary skill in the art and the prosecution history pertaining to the patent.

37 C.F.R. § 42.100(b); *see Phillips v. AWH Corp.*, 415 F.3d 1303, 1312–13 (Fed. Cir. 2005) (en banc).

Petitioner states that "[c]laim terms are construed herein using the standard used in civil actions," and Petitioner is "not conceding that each Challenged Claim satisfies all statutory requirements, nor waiving arguments that can only be raised in district court." Pet. 2.

In asserting how its proposed combination would have included the limitations of claims 1 and 30, Petitioner argues what certain claim terms would have encompassed or would have been understood to mean based on the Specification of the '733 patent. *See, e.g.*, Pet. 20 (arguing that "end-user device" includes "networked" devices) (citing Ex. 1001, 5:65–6:28, 6:49–56, 8:3–15. 8:60–9:15; Ex. 1003 ¶ 99), 20–21 (arguing that "modem" includes modems for 2G and 3G communications over a wireless access

network) (citing Ex. 1001, 12:61–13:32, 25:29–45, 27:38–44, 29:52–53, 33:59–65, 34:24–27; Ex. 1003 ¶ 100), 21 (arguing that "one or more servers performing one or more server functions would meet the claimed 'network system'") (citing Ex. 1001, 16:13–26, 17:8–11, 68:20–37, Figs. 16–20; Ex. 1003 ¶ 101), 23–24 (arguing that "service control link" "can provide an efficient and flexible control plane communication link" for controlling a service and would have been understood to be provided when implemented for communication) (citing Ex. 1002, 76, 99–100; Ex. 1003 ¶¶ 107, 108), 25 (arguing that "network element" is any element that is part of a network) (citing Ex. 1001, 23:46–54, Figs. 1–8; Ex. 1003 ¶ 113), 26 (arguing that "control-plane communications" would have been understood to include communications across a network for supervising and control of services delivered to a device) (citing Ex. 1001, 8:60–9:15, 9:23–24, 37:36–43, 68:19–28; Ex. 1003 ¶ 116), 27–28 (arguing that "service control device link agent" can be any component, possibly implemented in software, that performs some function for a service control device link) (citing Ex. 1001, 15:58–16:12, 37:43–62, 42:51–52, claim 26; Ex. 1003 ¶ 118), 29 (arguing that "device agent" includes software component and can be on a device) (citing Ex. 1001, 15:58–16:2, 42:51–52; Ex. 1003 ¶ 120; Ex. 1029, 12; Ex. 1021, 13–23; Ex. 1038, 17), 36–37 (arguing that "encrypted agent message" includes "an encrypted message sent to an agent") (citing Ex. 1003 ¶ 139), 38 (arguing that "decrypted agent message" includes "a message that was sent to an agent and then decrypted") (citing Ex. 1003 ¶ 142), 40 (arguing that "message content" includes multimedia messaging service control information and multimedia content) (citing Ex. 1003 ¶ 150).

As we did for institution, we apply Petitioner's understanding of the claim terms as above described for our analysis. Inst. Dec. 9.

"Patent Owner agrees that no formal claim construction is necessary, because all terms carry their plain and ordinary meaning." PO Resp. 5 (citing Pet. 1–2).

Based on the full record, we do not need to interpret expressly any claim term. *Realtime Data, LLC v. Iancu*, 912 F.3d 1368, 1375 (Fed. Cir. 2019) ("The Board is required to construe 'only those terms that . . . are in controversy, and only to the extent necessary to resolve the controversy.'") (quoting *Vivid Techs., Inc. v. Am. Sci. & Eng'g, Inc.*, 200 F.3d 795, 803 (Fed. Cir. 1999)).

D. Asserted Obviousness Based on TS-23.140 and Ogawa

1. TS-23.140 (Ex. 1004)

TS-23.140 "defines the stage 2 and stage 3 description of the non-realtime Multimedia Messaging Service, MMS." Ex. 1004, 10.[2] Figure 3 of TS-23.140 is below reproduced.

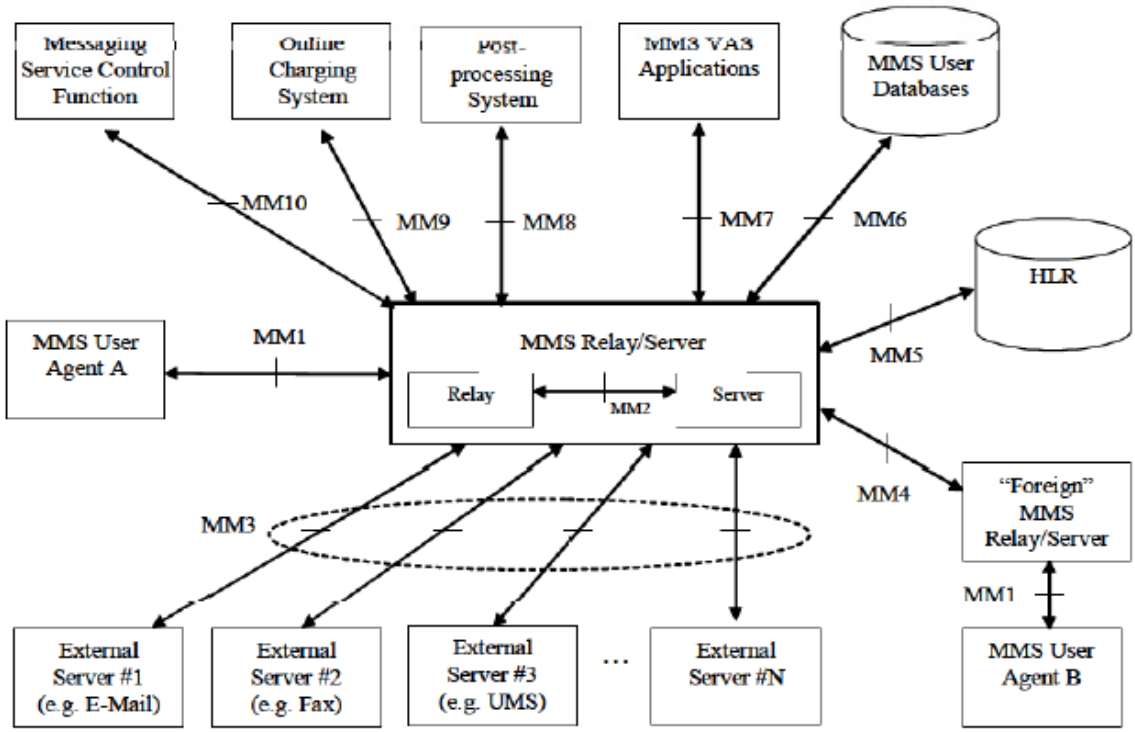

Figure 3: MMS Reference Architecture

"Figure 3 shows the MMS Reference Architecture." Ex. 1004, 24. TS-23.140 defines "MMS User Agent" as an "application residing on a UE ["User Equipment"] . . . or an external device that performs MMS-specific operations on a user's behalf and/or another application's behalf." *Id.* at 14. The MMS User Agent can provide application layer functionalities, such as "the decryption and encryption of an MM on end-user to end-user basis."

[2] We, like Petitioner, cite to page numbering at the top center of each page, not the exhibit page numbering.

Id. at 19; *see also id.* at 15 (listing "MM" as the abbreviation for "Multimedia Message"), 41 (stating "authentication mechanisms based on public/private key cryptography and certificates may also be used").

"The MMS Relay/Server is responsible for storage and handling of incoming and outgoing messages and for the transfer of messages between different messaging systems" (Ex. 1004, 17) and "for storage and notification, reports, and general handling of messages" (*id.* at 21). *See also id.* at 23–25 (describing further the MMS Relay/Server).

MMS VAS Applications are "[a]pplications providing Value Added Services (e.g. news service or weather forecasts) to MMS Users." Ex. 1004, 14; *see also id.* at 18, 23, 41 (describing further MMS VAS Applications). "MMS may also be used to transport data specific to applications." *Id.* at 54. "Abstract messages that are sent by an MMS User Agent or an MMS VAS Application on behalf of an originating application shall contain a destination application identifier." *Id.* at 55. "If the destination application resides on a receiving MMS User Agent, the MMS User Agent shall immediately route the received MMS information on to the destination application that is referred to from the destination application identifier." *Id.* at 56.

2. Ogawa (Ex. 1005)

Ogawa is "directed to encryption methodologies and a portable storage device for storing data thereto." Ex. 1005, 1:17–19. Ogawa describes a "data encryption system" and "associated methodology to compress[] and encrypt data based on a shared encryption key." *Id.* at 3:18–21. Components are "operably linked via an external wide area telecommunication network 4," such as a wide area network ("WAN") or the Internet. *Id.* at 3:44–54.

Ogawa's encryption "may be utilized to enhance security over networks to effectively tunnel data over the network 4," such as "conventional TCP/IP (Transmission Control Protocol/Internet Protocol) or UDP (User Datagram Protocol), encryption communication, such as IPsec (Internet Protocol Security) or SSL (Secure Socket Layer)." Ex. 1005, 3:61–4:4.

In one embodiment, "if a start instruction is issued by the client starting unit 31 at the client site 3, the shared key encrypted data will be received by the receive unit 32 from the database server 2 via network 4." Ex. 1005, 5:59–62; *see also id.* at 6:42–7:21 (describing Fig. 2 and the processing operations for distributing shared encryption keys). That "received shared key encrypted data will be decrypted using the shared encryption key 52 which was supplied to decryption unit 33 and beforehand stored on the removable storage 5." *Id.* at 5:62–65.

"Data that was expanded by the decompression unit 34 is re-encrypted by the encryption unit 35, using an inherent encryption key 53 that was stored on the removable storage 5." Ex. 1005, 6:1–3. "[E]ncryption key 53 is generated from an inherent identification code that was assigned during manufacturing and stored on the internal memory device of the removable storage 5." *Id.* at 6:4–7.

Figure 7 of Ogawa is below reproduced.

Figure 7

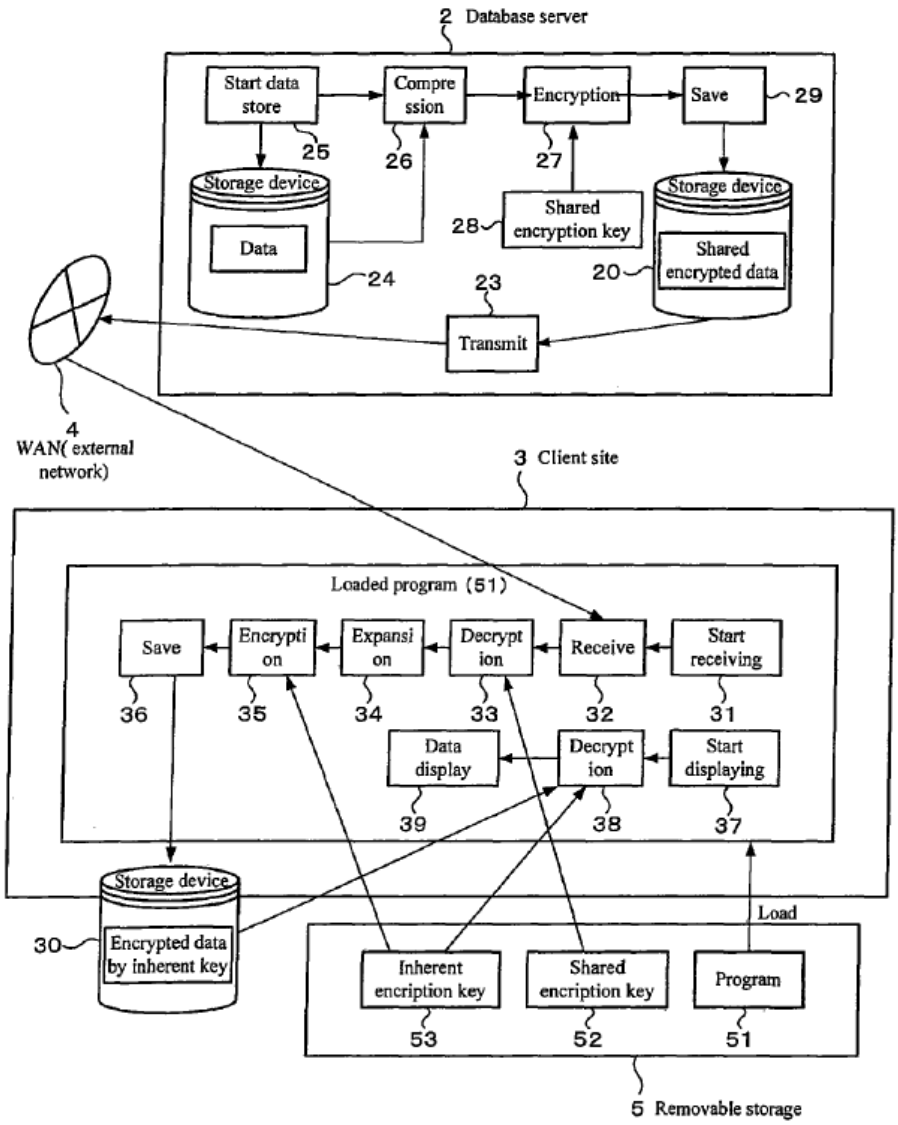

Figure 7 shows "a high level block diagram of an exemplary encryption methodology where the encryption takes place on the database serve[r]." Ex. 1005, 3:4–5. "[D]atabase server 2 is integrated with the function of a data input site 1[,] and the database server 2 and the client site 3 are connected through the external network 4." *Id.* at 9:16–20.

"When a start instruction is sent from the saving start unit 25, the compression unit 26 will compress the saved data in the storage device 24," and "[t]he compressed data is supplied to the encryption unit 27 and encrypted by the shared encryption key 28." Ex. 1005, 9:22–26. "[T]he share[d] key encrypted data are saved in the storage device 20." *Id.* at 9:26–27. "Data encrypted by the shared encryption key saved in the storage device 20 is sent to the network 4 through a sending unit 23 which is requested from client site 3." *Id.* at 9:31–33.

3. Independent Claim 1

a) "An end-user device comprising:"

Petitioner argues that, to the extent the preamble is limiting, the user device of TS-23.140 would have been understood to be "[a]n end-user device." Pet. 20 (citing Ex. 1003 ¶ 99; Ex. 1004, 14).

The relied-upon portion of TS-23.140 describes "MMS User Agent" to be an "application residing on a UE . . . or an external device that performs MMS-specific operations on a user's behalf and/or on another application's behalf." Ex. 1004, 14. We also credit Petitioner's testimonial evidence regarding the preamble because the cited portion of TS-23.140 supports it. Ex. 1003 ¶ 99; Ex. 1004, 14. Patent Owner does not provide a responsive argument regarding the preamble. *See* PO Resp.

Based on the full record before us, Petitioner persuades us, and we find, that the User Equipment of TS-23.140 teaches, suggests, or would have been understood to disclose, to the extent the preamble is limiting, "[a]n end-user device."

b) "a modem for enabling communication with a network system over a service control link provided by the network system over a wireless access network"

Petitioner argues that its proposed combination would have had a modem for communicating between an MMS Relay/Server and VAS

applications and the MM1 interface of TS-23.140 would have been implemented for communications and facilitating transmission of control information. Pet. 21–24 (citing Ex. 1003 ¶¶ 102–107, 109, 110; Ex. 1004, 14, 18, 23, 55–56, Fig. 3); *see also id.* at ii (labeling the limitation "1a").

A relied-upon portion of TS-23.140 shows an MMS User Agent communicating through interface MM1 with an MMS Relay/Server, MMS VAS Applications, MMS User Databases, and other components. Ex. 1004, Fig. 3; *see also* Pet. 22 (providing an annotated Fig. 3). The other-relied upon portions describe those components and sending and receiving messages between an MMS User Agent or MMS VAS Application and a destination application over wireless networks. Ex. 1004, 14, 18, 23, 55–56.

We credit Petitioner's testimonial evidence regarding the above-quoted limitation because the cited portions of TS-23.140 support it. Ex. 1003 ¶¶ 102–107, 109, 110; Ex. 1004, 14, 18, 23–25, 55–56, Figs. 2–4. Patent Owner does not provide a responsive argument regarding the recited modem. *See* PO Resp.

Based on the full record before us, Petitioner persuades us, and we find, that TS-23.140 teaches or suggests "communication with a network system over a service control link provided by the network system over a wireless access network." As discussed below in our analysis of Petitioner's proposed combination, Petitioner persuades us that one of ordinary skill in the art would have implemented TS-23.140 with a modem for such communication with a reasonable expectation of success.

c) "the service control link secured by an encryption protocol"

Petitioner argues that SSL or TCP Transport Layer Security ("TLS") would have been used to secure the interface between the MMS User Agent and MMS Relay/Server. Pet. 24–25 (citing Ex. 1001, 17:2–26, 87:62–88:7,

98:42–44; 99:26–29; 101:65–67; Ex. 1003 ¶¶ 111, 112); *see also id.* at ii (labeling the limitation "1a1").

We credit Petitioner's testimonial evidence that SSL/TLS would have been used to secure interface MM1 between the MMS User Agent and the MMS Relay/Server because the cited portions of the record support it. Ex. 1003 ¶¶ 111, 112; Ex. 1004, 24–25, Fig. 4; Ex. 1012, 21. Patent Owner does not provide a responsive argument regarding the above-quoted limitation. *See* PO Resp.

As discussed below in our analysis of Petitioner's proposed combination, based on the full record before us, Petitioner persuades us that SSL/TLS would have been used in TS-23.140 to secure the interface between MMS User Agent and MMS Relay/Server with a reasonable expectation of success.

d) "and configured to support control-plane communications between the network system and a service control device link agent on the end-user device"

Petitioner argues that interface MM1 between the MMS User Agent and MMS Relay/Server would have been understood to meet the above-quoted limitation because it facilitates transmitting control information. Pet. 25–28 (citing Ex. 1001, 8:60–9:15; Ex. 1003 ¶¶ 114, 115, 117–119; Ex. 1004, 14, 19, 21, 23–24, 30–31, 35–36, 55–56); *see also id.* at ii (labeling the limitation "1a2").

The relied-upon portions of TS-23.140 describe the MMS Relay/Server passing to a recipient MMS User Agent "application/implementation specific control information (Ex. 1004, 55–56) and delivering service based on a user device's capabilities" (*id.* at 19, 21, 30–31, 35–36). We credit Petitioner's testimonial evidence regarding the "control-plane communications" because the cited portions of TS-23.140

support it. Ex. 1003 ¶¶ 114, 115, 117; Ex. 1004, Ex. 1004, 14, 19, 21, 30–31, 35–36, 55–56).

We also credit Petitioner's testimonial evidence that such communications are between the MMS Relay/Server, part of a "network system," and the MMS User Agent, the asserted "service control device link agent." Ex. 1003 ¶¶ 118, 119. The cited portions of the record support the testimony. Ex. 1004, 14, 19, 23–24, 30–31, 35–36; Ex. 1029, 12. Patent Owner does not provide a responsive argument regarding the above-quoted limitation. *See* PO Resp.

Based on the full record before us, Petitioner persuades us, and we find, that TS-23.140 teaches or suggests that its MM1 interface between MMS Relay/Server and MMS User Agent is "configured to support control-plane communications," that its MMS Relay/Server is part of a "network system," and that its MMS User Agent is "a service control device link agent on the end-user device."

e) "a plurality of device agents communicatively coupled to the service control device link agent through an agent communication bus,"

Petitioner argues that TS-23.140's destination applications would have been understood to be device agents that are communicatively coupled to other applications through an agent communication bus, as the term is used in the '733 patent. Pet. 28–30 (citing Ex. 1001, 42:48–61; Ex. 1003 ¶¶ 121–124; Ex. 1004, 54–55, 56; Ex. 1038, 24); *see also id.* at ii (labeling the limitation "1b"). According to Petitioner, "MMS is 'used to transport data specific to applications' residing on the end-user device that are not the MMS User Agent," such as a "destination application." *Id.* at 29 (citing Ex. 1003 ¶ 121; Ex. 1004, 54–56). Petitioner also argues that the MMS User Agent would have been understood to be communicatively coupled to a device's other applications "through an agent communication bus," a term

that the '733 patent uses "to include a communication link that facilitates communications." *Id.* at 30 (citing Ex. 1001, 42:48–61; Ex. 1003 ¶¶ 123, 124; Ex. 1004, 54; Ex. 1038, 24).

(1) Patent Owner's Response

Patent Owner responds that Petitioner fails to show that TS-23.140 discloses "a plurality of device agents communicatively coupled to the service control device link agent through an agent communication bus." PO Resp. 6 (citing Pet. 28–31), 11–12. Patent Owner argues that Petitioner maps the destination applications to the "plurality of device agents" and the "MMS User Agent," an application on user equipment or an external device, to the "service control device link agent." *Id.* at 6–7 (citing Pet. 28–29; Ex. 1004, 14, 18).

According to Patent Owner, Petitioner's theory that it would have been understood that the MMS User Agent and destination applications interface through an agent communication bus is deficient "because the destination applications are disclosed as being ***part of*** the MMS User Agent in TS-23.140." PO Resp. 7. Patent Owner also argues that TS-23.140 does not disclose explicitly an "agent communication bus," as acknowledged by Petitioner. *Id.* at 7 (citing Pet. 30).

Patent Owner contends that one of ordinary skill in the art "would not have found it necessary or obvious to use a 'bus' for communications that occur internally ***within*** an application." PO Resp. 7 (citing Ex. 2001 ¶¶ 35–50). Patent Owner cites to the express disclosure of TS-23.140 and testimonial evidence to support that the destination applications reside on the MMS User Agent. *Id.* at 8 (citing Ex. 1004, 54; Ex. 2001 ¶¶ 38–48), 9 (citing Ex. 2001 ¶¶ 37–48), 11.

Patent Owner also cites to deposition testimony to assert that Petitioner's declarant understood that applications residing on another

application means that those applications are subapplications. PO Resp. 8 (citing Ex. 2003, 28:6–30:11). Patent Owner contends that the deposition testimony is inconsistent with statements in the declaration that the phrase "reside on" referred to the device. *Id.* at 8–9, n.1 (citing Ex. 1003 ¶ 31; Ex. 2001 ¶¶ 39–48; Ex. 2003, 30:13–31:22).

(2) Petitioner's Reply

Petitioner replies that it applies the ordinary and customary meaning of "agent communication bus," but Patent Owner applies an unsupported narrower interpretation that limits the term to "a bus that routes data outside an application." Pet. Reply 4–6 (citing Pet. 2, 30; PO Resp. 5, 7; Ex. 2001 ¶ 37). Petitioner argues that Patent Owner does not address how the '733 patent describes the term and does not cite to any intrinsic or extrinsic evidence. *Id.* at 6 (citing PO Resp. 8–12). Petitioner also argues that Patent Owner's cited testimony "merely parrots" Patent Owner's arguments, "lacks evidentiary underpinning," and is entitled to little weight. *Id.* at 6–7 (citing PO Resp. 7, 9; Ex. 2001 ¶ 37). Petitioner further argues that Patent Owner contorts the evidence identified by Petitioner's declarant and that the relied-upon evidence fully corroborates Petitioner's declarant. *Id.* at 7 (citing PO Resp. 9; Ex. 1003 ¶¶ 124–125; Ex. 2001 ¶¶ 37, 49–50).

In Petitioner's view, the intrinsic and extrinsic evidence does not limit "agent communication bus" to buses for communications external to an application. Pet. Reply 8–10 (citing Pet. 30; Ex. 1001, 42:48–61, 42:67–43:7; Ex. 1003 ¶ 124; Ex. 1045, 20–21, 54–55; Ex. 1046, 46; Ex. 1047, 5:41–61; Ex. 1048 ¶¶ 1, 3, 4, 19; Ex. 1049, 907; Ex. 1050, 2:64–3:6, 3:51–58, Fig. 5). Petitioner contends that the term "encompasses any communication link between processes and is not limited to buses that ***only*** facilitate communications that are 'external' to an application," as argued by Patent Owner. *Id.* at 10 (citing PO Resp. 8–9; Ex. 1038, 24).

Petitioner also replies that TS-23.140 and Ogawa would have rendered obvious "agent communication bus" under either party's proposed interpretation. Pet. Reply 10–25. Specifically, under Petitioner's proposed interpretation that "encompasses a communication link for agents/applications, regardless of whether such communication is internal or external to an application," Petitioner argues that the parties do not dispute that (1) MMS User Agent is a "service control device link agent," (2) destination applications are "device agents," and (3) the MMS User Agent and destination applications are communicatively coupled through "an agent communication bus." *Id.* at 10–12 (citing Pet. 28, 29–31; PO Resp. 1, 6; Ex. 1001, 42:48–61; Ex. 1003 ¶ 124; Ex. 1004, 23–24, 30–31, 35–36, 54–56; Ex. 1038, 24); *see also id.* at 16 (citing Pet. 27–30).

Petitioner further argues that Patent Owner relies on its uncorroborated testimony that does not rule out buses for communicating between subparts and that Patent Owner has no supporting evidence or technical reasoning that data can be managed without a bus. Pet. Reply 14–15 (citing Pet. 30; PO Resp. 9, 10; Ex. 1001, 42:48–54, 42:67–43:7; Ex. 1003 ¶¶ 124–126; Ex. 1031, 10:56–62; Ex. 1038, 24; Ex. 1045, 96, 156–157; Ex. 1046, 46; Ex. 1048 ¶¶ 1, 3, 4, 19; Ex. 1050, 2:64–3:6, 3:51–58, 5:41–61, Fig. 5; Ex. 2001 ¶¶ 37, 38). Petitioner additionally contends that, to the extent Patent Owner is arguing a bus would not have been used for applications in the same area of memory, buses can be used to facilitate communications between software components in the same area of memory. *Id.* at 16 (citing PO Resp. 10; Ex. 1001, 42:54–67); *see also id.* at 16 (citing Pet. 30; PO Resp. 7).

Under Patent Owner's narrower interpretation, Petitioner contends that TS-23.140 and Ogawa would still render obvious "agent communication bus." Pet. Reply 17 (citing PO Resp. 9; Ex. 2001 ¶ 37), 24. According to

Petitioner, "TS-23.410 never refers to destination applications as 'subapplications' of the MMS User Agent," and Patent Owner is taking out of context the description that applications may "reside on an MMS User Agent." *Id.* (citing PO Resp. 8; Ex. 1004, 54). In Petitioner's view, that description makes clear that destination applications are not internal to the MMS User Agent and that one of ordinary skill in the art would have understood that MMS User Agent in this description refers to the user device or equipment. *Id.* at 17–18; *see also id.* at 18–19 (arguing why destination applications are not internal to the MMS User Agent Application) (citing Pet. 6; PO Resp. 8; Ex. 1003 ¶¶ 51, 52; Ex. 1004, 54–56, 60). Petitioner, thus, contends that, even under Patent Owner's interpretation, the proposed combination includes an "agent communication bus" "because it transports data from the MMS User Agent to a separate, external destination application." *Id.* at 18 (citing Pet. 30–31).

Petitioner also argues that TS-23.140 discloses that MMS User Agent application and destination applications are separate because it describes "an application other than the MMS User Agent," "another application's behalf," and "two entities." Pet. Reply 19–20 (citing Pet. 6; Ex. 1004, 14, 54, 56), 24. Petitioner provides other similar examples (*id.* at 20 (citing Ex. 1004, 14, 19, 54, 55, 56)) and corroboration from another source (*id.* at 21 (citing Pet. 6, 29; Ex. 1028 (Miraj E. Mostafa, *Transporting Data Between Wireless Applications Using a Messaging System--MMS*, Wireless Communications and Mobile Computing 732–733, Fig. 4) (2007) ("Mostafa")). Petitioner, thus, argues that TS-23.140 never describes or requires destination applications to be subparts of the MMS User Agent Application, as asserted by Patent Owner. *Id.* at 20, 21 (citing PO Resp. 8–9), 24 (citing PO Resp. 8–9).

Petitioner also provides support that one of ordinary skill in the art would have understood that MMS User Agent can refer to the user device in some contexts, such as when the phrase "an application other than the MMS User Agent" is used, a device or terminal is labeled "MMS UA," or the MMS User Agent is described as a client. Pet. Reply 21–23 (citing PO Resp. 8–9; Ex. 1003 ¶ 51; Ex. 1004, 14, 54, Fig. A.8). According to Petitioner, Patent Owner's declarant conceded that a "client" is a "computer" and confirmed in a deposition for another proceeding that TS-23.140 refers to an MMS User Agent being reachable over a network. *Id.* at 23–24 (citing Ex. 1051, 51:21–53:6; Ex. 2001 ¶ 43; Ex. 2004, 102).

(3) Patent Owner's Sur-Reply

According to Patent Owner, the parties do not dispute that (1) destination applications must reside on the MMS User Agent in order for that application to receive application data and (2) the MMS User Agent is defined as an application residing on user equipment or another device. PO Sur-reply 3–4 (citing PO Resp. 1, 8–9; Ex. 1004, 14, 18, 54, 56; Ex. 2001 ¶¶ 38, 45–48; Ex. 2003, 28:17–19), 20 (citing Ex. 1004, 14). Patent Owner contends that the only dispute is the meaning of "reside on an MMS User Agent." *Id.* at 4. Patent Owner argues that, in Petitioner's view, it means an application residing on the device and not on the MMS User Agent application software, and, in Patent Owner's view, it means an application residing on the MMS User Agent application. *Id.* (citing Pet. 6; PO Resp. 1–2, 8–9; Pet. Reply 22).

Patent Owner also argues that both parties' declarants agree that residing on another application in the context of TS-23.140 means the application is a subapplication of the other application. PO Sur-reply 4–6 (citing Ex. 2001 ¶¶ 37–38, 46–48; Ex. 2003, 29:16–30:11), 20 (citing Ex. 2001 ¶ 38; Ex. 2003, 29:16–30:11). Patent Owner further argues that

Petitioner does not explain nor address how an application can reside on another application without being a subapplication in view of TS-23.140's explicit definition. *Id.* at 6–7 (citing Pet. Reply 21–25; Ex. 1004, 14), 20 ("Petitioner in Reply does not even ***address*** these undisputed facts, which show that the destination applications in TS-23.140 are subapplications of the MMS User Agent.").

Patent Owner additionally argues that Petitioner's reliance on TS-23.140's teaching regarding "application data" distinguishes MMS User Agent functionality and its subapplication but does not provide a reason to give less weight to the explicit definition of "MMS User Agent." PO Sur-reply 7–8 (citing Pet. Reply 19–22; Ex. 2001 ¶ 48). According to Patent Owner, Petitioner's reliance on Figure A.8 of TS-23.140 shows that MMS User Agent resides on a terminal but does not equate that device with the MMS User Agent. *Id.* at 8–9 (citing Pet. Reply 22–23; Ex. 1003, Fig. A.8).

Regarding Petitioner's definition that "client" can refer to a computer, Patent Owner cites another dictionary definition and argues that "'client' ***can also*** refer to a software application." PO Sur-reply 9 (citing Pet. Reply 23–24; Ex. 2004). In Patent Owner's view, "the ***more common*** understanding of client as referring to a software application is consistent with ***TS-23.140's*** definition," and Petitioner ignores the more common definition of "client." *Id.* at 9–10. Patent Owner also argues that "Mostafa makes clear that it is applying ***TS-23.140***'s definition of 'MMS User Agent,' and not using it to refer to a complete user device." *Id.* at 10 (citing Ex. 1004, 18; Ex. 1028, 731).

Regarding Petitioner's reliance on deposition testimony from another proceeding, Patent Owner argues that its declarant "never stated, or even implied, that in the context of TS-23.140, the words 'MMS User Agent' refer to a device or user terminal as Petitioner inaccurately suggests," and

merely indicated that, if the MMS User Agent is reachable, then the device with the MMS User Agent is reachable. PO Sur-reply 10–11 (citing Pet. Reply 24; Ex. 1051, 52:4–53:6). Patent Owner also quotes "MMS User Agent: application residing on a UE" from TS-23.140. *Id.* at 11 (citing Ex. 1004, 14). Patent Owner further argues that Petitioner's declarant "used a 'chess application' as an ***explicit example*** of a subapplication within a VAS application (which is analogous to an MMS User Agent in the context of TS-23.140)." *Id.* at 11–12 (citing Pet. Reply 20; Ex. 2001 ¶ 47; Ex. 2003, 29:16–30:11). In Patent Owner's view, the record "confirms that applications that receive application data in TS-23.140 reside on, and are thus subapplications of, the MMS User Agent." *Id.* at 12; *see also id.* at 2 (arguing that Petitioner relies on a flawed premise that an application "resid[ing] on" an MMS User Agent means that the application resides on the device, but TS-23.140 makes clear that such applications are subparts of the MMS User Agent).

Patent Owner also argues that a bus was not typically used for intra-application communication. PO Sur-reply 12–13. Patent Owner further argues that, although its declarant could not opine that a bus was never used for intra-application communication, its declarant addressed Petitioner's assertion by explaining that "simpler options that do not involve a bus [we]re available and widely used for intra-application communication," and there would have been no motivation to use a bus for such communication. *Id.* at 13 (citing Ex. 2001 ¶¶ 38, 49).

Patent Owner notes that Petitioner does not provide any rebuttal testimony and "relies ***solely*** on attorney argument to characterize various references as supposedly disclosing the use of a bus to communicate data ***within*** an application." PO Sur-reply 14. According to Patent Owner, a bus

for intra-application communication was not a "familiar, known component." *Id.*

Patent Owner argues that it has never contended that "agent communication bus" excludes anything used for intra-application communication but has made clear that the ordinarily skilled artisan "did not view the use of a bus as desirable for use in intra-application communications" and, thus, a bus would not have been obvious to use in TS-23.140. PO Sur-reply 14–15 (citing PO Resp. 9–11; Pet. Reply 4–10). Patent Owner also argues that merely asserting that the definition of "bus" does not rule out a bus for intra-application communication is not sufficient to show obviousness. *Id.* at 1–2 (citing Pet. Reply 4–10, 11–12), 15.

Patent Owner further argues that Petitioner asserts attorney arguments to support that buses were used for communicating with subapplications. PO Sur-reply 15 (citing Pet. Reply 14). In Patent Owner's view, Petitioner's cited evidence fails to support that a bus was used for communicating with subapplications because the cited references do not mention a bus or are not appropriate for software applications. *Id.* at 15–17 (citing Pet. Reply 14; Ex. 1045, 23; Ex. 1048 ¶ 3; Ex. 1050, code (54), 1:6–39, 2:50–51, 2:64–3:13, 9:19–35, Figs. 11–20).

(4) Petitioner Shows the Limitation

(a) "a plurality of device agents communicatively coupled to the service control device . . . "

We find, as argued by Petitioner, that the destination applications of TS-23.140 communicating with an MMS User Agent teach or suggest "a plurality of device agents communicatively coupled to the service control device link agent." Pet. 28–29; Ex. 1004, 54–56. The cited portions of TS-23.140 describe MMS being "used to transport data specific to applications" (*id.* at 54–55) and that data including an "application identifier of the

destination application" and "application/implementation specific control information" (*id.*). We credit Petitioner's testimonial evidence regarding the "plurality of device agents" because the cited portions of the record support it. Ex. 1003 ¶¶ 120–122; Ex. 1004, 54–56; Ex. 1028, 732–733.

We agree with Petitioner that the '733 patent uses the term "agent" to include components implemented "entirely in software" to perform a function on behalf of a client or server. Pet. 28; Ex. 1001, 15:58–60 ("In some embodiments, the service processor 115 includes various components, such as device agents, that perform service policy implementation or management functions."), 15:60–16:2 (listing some functions of device agents), 42:51–52 (describing that "agents are implemented largely or entirely in software"); Ex. 1003 ¶ 120. We, thus, agree with Petitioner that the term "agent" as used by the '733 patent would encompass the destination applications of TS-23.140.

As discussed above, we find that TS-23.140's MMS User Agent teaches or suggests the "service control device link agent." Ex. 1003 ¶ 119; Ex. 1004, 14, 19, 23–24, 30–31, 35–36. The parties do not dispute that a destination application is in communication with an MMS User Agent. PO Resp. 8–12; Pet. Reply 1; PO Sur-reply 2–12.

Patent Owner does not dispute Petitioner's arguments regarding the "plurality of device agents communicatively coupled to the service control device link agent." *See* PO Resp.; PO Sur-reply. Based on the full record, Petitioner persuades us, and we find, that TS-23.140 teaches or suggests "a plurality of device agents communicatively coupled to the service control device link agent."

(b) " . . . through an agent communication bus"

Patent Owner disputes that the asserted plurality of device agents is communicatively coupled to the asserted service control device link agent "through an agent communication bus." PO Resp. 6–11; PO Sur-reply 1–21.

As discussed above, Petitioner does not propose expressly an interpretation for any claim term (Pet. 2), and Patent Owner argues that "formal claim construction is not necessary" (PO Resp. 5). Petitioner's argument is based on the asserted use of "agent communication bus" in the '733 patent. Pet. 28–30 (citing Ex. 1001, 42:48–61). The cited portion of the '733 patent states that:

> In some embodiments of the agent communication bus 1630, the design of the agent communication bus depends on the nature of the design embodiments for the agents and/or other functions. For example, if the agents are implemented largely or entirely in software, then the agent communication bus can be implemented as an inter-process software communication bus. In some embodiments, such an inter-process software communication bus is a variant of D-bus (e.g., a message bus system for inter-process software communication that, for example, helps applications/agents to talk to one another), or another inter-process communication protocol or system, running a session bus in which all communications over the session bus can be secured, signed, encrypted or otherwise protected.

Ex. 1001, 42:48–61.

Petitioner's cited portion of the '733 patent supports its argument that "agent communication bus" does not exclude expressly intra-application communication. Ex. 1001, 42:48–61. The '733 patent states that "if the agents are implemented largely or entirely in software," like the destination applications of TS-23.140, "then the agent communication bus can be implemented as an inter-process software communication bus," that "[i]n some embodiments" would be "a variant of D-bus" or "a message bus

system for inter-process software communication that, for example, helps applications/agents to talk to one another." *Id.* at 42:51–58.

One of ordinary skill in the art would have also understood that destination applications would have been communicatively coupled to the MMS User Agent by "an agent communication bus," as that term is used in the '733 patent, because they are, in the words of the '733 patent, "talk[ing] to one another." Ex. 1001, 42:51–58; Ex. 1003 ¶ 124; *see also* Ex. 1038, 24.

Patent Owner responds that the recited "bus" would not encompass communications that occur internally within an application. PO Resp. 7 (citing Ex. 2001 ¶¶ 35–50), 9–10 (citing Ex. 2001 ¶¶ 37–38, 49–50). As noted by Petitioner, Patent Owner does not address how the above-quoted portion of the '733 patent excludes communications that occur internally within an application. Pet. Reply 6.

Based on the full record, we determine that the scope of "agent communication bus" does not exclude intra-application communications. Pet. 30; Ex. 1001, 42:48–61; Ex. 1003 ¶ 124; Pet. Reply 8–10; *see also* PO Sur-reply 14 ("Patent Owner has never argued that the claimed 'agent communication bus' would, by definition, exclude anything used for intra-application communication bus."), 15 ("Even if Petitioner is correct that the definition of 'agent communication bus' does not ***categorically exclude*** a bus used for intra-application communication (an issue on which Patent Owner has never taken any position because it is irrelevant to Patent Owner's argument), that plainly would not be sufficient to show that the use of such a bus for intra-application communication ***would have been obvious***."); Ex. 1038, 24 (Amended Infringement Contentions) (indicating that an example of "an agent communication bus" is a "communication path for various agents and functions to communicate over"). We also determine that giving "agent communication bus" broad scope does not read out the

limitation, because the '733 patent itself indicates that the term is broad. *See* Ex. 1001, 42:48–61; Ex. 1003 ¶ 124.

We also find that Petitioner's cited portions of TS-23.140 show that one of ordinary skill in the art would have understood that "destination applications" can be separate from and external to an MMS User Agent. Ex. 1004, 14, 19, 54, 55, 56. TS-23.140 defines "Application Data" as "Information/data specific to *an application other than the MMS User Agent*/VASP which is intended to be transported without alteration by using MMS." Ex. 1004, 14 (emphasis added). TS-23.140 also describes that "[a]pplications that intend to transport application specific data using MMS may either reside on an MMS User Agent or on an MMS VAS Application." *Id.* at 54.

TS-23.140 further describes "rout[ing] the received MMS information on to the destination application," "[i]f the *destination application resides on a receiving MMS VAS Application*" and "[i]f the destination application resides on a receiving MMS User Agent." Ex. 1004, 56 (emphasis added); *see also id.* ("If the destination application does not reside on the receiving MMS User Agent . . . or MMS VAS Application, the MMS User Agent or MMS VAS Application shall discard the corresponding abstract message."). TS-23.140 clarifies that "[a]pplications that reside on a[n] MMS VAS Application are differentiated from the MMS VAS Application," thus indicating that residing applications are not subapplications of the MMS VAS Application. *Id.* at 54.

The full record does not include any reason why the description quoted above does not apply to an application residing on an MMS User Agent. Based on the full record, we find that an application residing on an MMS User Agent would also be understood as being differentiated from the

MMS User Agent. *See* Ex. 1004, 54. The residing application, therefore, would not be understood to be a subapplication of the MMS User Agent. *Id.*

Figure 3 of TS-23.140 also shows "MMS Relay/Server" connected to "MMS User Agent A" via interface "MM1" and connected to "MMS VAS Applications" via interface "MM7." Ex. 1004, 23. The destination applications residing on "MMS VAS Applications" would not be part of, internal to, or a subapplication of "MMS User Agent A." *See id.* TS-23.140 further describes "exceptions" for "[w]hen MMS is used to transport data specific to applications between two MMS User Agents or an MMS User Agent and an MMS VAS Application." *Id.* at 55.

One of ordinary skill in the art would have understood from the disclosures discussed above that TS-23.140 teaches or suggests that a destination application may reside on an MMS User Agent or distinctly on an MMS VAS Application. Ex. 1004, 23, 56. The ordinarily skilled artisan would have also understood that application data specific to an application other than an MMS User Agent or MMS VAS Application can be transported between two MMS User Agents or between an MMS User Agent and an MMS VAS Application. *Id.* at 14, 54, 55.

In particular, we find that TS-23.140 discloses that its MMS User Agent and destination applications can be separate and in communication with each other, such as when application data is transported between an MMS User Agent and a destination application on an MMS VAS Application. One of ordinary skill in the art would have, thus, understood that the asserted device agents (destination applications) are communicatively coupled to the asserted service control device link agent (MMS User Agent) through an agent communication bus.

Also, even if destination applications were subapplications of an MMS User Agent, the scope of the term "agent communication bus" would

encompass the communication path between the MMS User Agent and a subapplication. Further, TS-23.140 describes that "MMS is used to transport data specific to applications between two MMS User Agents." Ex. 1004, 55. From this description, one of ordinary skill in the art would have understood that a first MMS User Agent is communicatively coupled to the destination applications of a second MMS User Agent. *See id.* One of ordinary skill in the art would have understood that the first MMS User Agent would have been communicatively coupled to a destination application of the second MMS User Agent through an agent communication bus that routes data outside of an application.

Turning to Patent Owner's responsive arguments, because we determine that "agent communication bus" encompasses intra-application communications, arguments based on "agent communication bus" excluding applications "talk[ing] to one another" (such as an application talking to its subapplication) fail to show a deficiency in Petitioner's contentions for "agent communication bus." PO Resp. 8–12; PO Sur-reply 1–21. We also find that TS-23.140 describes "rout[ing] the received MMS information on to the destination application," "[i]f the destination application resides on a receiving MMS User Agent." Ex. 1004, 56.

Based on the full record, Petitioner persuades us, and we find that, one of ordinary skill in the art would have understood that the asserted device agents of TS-23.140 (destination applications) are communicatively coupled to the asserted service control device link agent of TS-23.140 (MMS User Agent) through an "agent communication bus," in accordance with the usage of the term in the '733 patent. Pet. 30; Ex. 1001, 42:48–61; Ex. 1003 ¶¶ 123, 124; Ex. 1004, 54; Ex. 1038, 24.

f) "each of the plurality of device agents identifiable by an associated device agent identifier"

Petitioner argues that TS-23.140's "destination application identifier" teaches "device agents identifiable by an associated device agent identifier." Pet. 31 (citing Ex. 1003 ¶ 127; Ex. 1004, 54–56); *see also id.* at ii (labeling the limitation "1b").

As discussed above, we find that TS-23.140's destination applications teach or suggest the "plurality of device agents." Petitioner's relied-upon portion of TS-23.140 describes that "[a]pplications that want to transport data specific to applications other than MMS will initially need to register with the appropriate MMS User Agent or MMS VAS Application," "[d]uring this registration process the application provisions an MMS User Agent or MMS VAS Application with its application identification value," and the destination application identifiers are used in sending and receiving messages. Ex. 1004, 54–56. We credit Petitioner's testimonial evidence because the cited portion of TS-23.140 supports it. Ex. 1003 ¶ 127; Ex. 1004, 54–56. Patent Owner does not provide a responsive argument regarding the above-quoted limitation. *See* PO Resp.

Based on the full record before us, Petitioner persuades us, and we find, that TS-23.140 teaches or suggests "each of the plurality of device agents identifiable by an associated device agent identifier."

g) "memory configured to store an encryption key"

Petitioner contends that the user device of TS-23.140 has a memory and that Ogawa teaches the well-known technique of storing an encryption key in memory connected to each device that encrypts or decrypts communications. Pet. 15 (citing Ex. 1003 ¶ 84; Ex. 1004, 19–20; Ex. 1005, 3:18–34, 4:48–57, 5:59–65, 6:64–7:21, Figs. 1, 7). Petitioner further

contends that there were limited ways of ensuring that the same key is used. *Id.* at 15–16 (citing Ex. 1003 ¶ 85).

Petitioner, thus, argues that its proposed combination includes the recited memory. Pet. 32 (citing Ex. 1003 ¶¶ 128–129); *see also id.* at ii (labeling the limitation "1c"). Petitioner also provides an argument based on Patent Owner's interpretation from related litigation. *Id.* at 32–33 (citing Ex. 1003 ¶¶ 130–132; Ex. 1021, 3–12, 25–32; Ex. 1038, 8, 29).

The cited portion of TS-23.140 describes "retrieval of an MM and its storage to local memory." Ex.1004, 19–20. The cited portions of Ogawa describe and show a shared key from database server 2 via network 4 and encryption key 52 stored on removable storage 5. Ex. 1005, 3:18–34, 4:48–57, 5:59–65, 6:64–7:21, Figs. 1, 7. We credit Petitioner's testimonial evidence regarding the recited memory because the cited portions of the record support it. Ex. 1003 ¶¶ 84, 85; Ex. 1004, 19–20; Ex. 1005, 3:18–34, 4:48–57, 5:59–65, 6:64–7:21, Figs. 1, 7; Ex. 1006, 29, claim 3; Ex. 1009, 3:25–27, 8:1–5. Patent Owner does not provide a responsive argument regarding the above-quoted limitation. *See* PO Resp.

Based on the full record before us, Petitioner persuades us, and we find, that Ogawa teaches or suggests a "memory configured to store an encryption key." As discussed below in our analysis of Petitioner's proposed combination, Petitioner persuades us that TS-23.140 and Ogawa would have included "memory configured to store an encryption key."

h) "the encryption key shared between the service control device link agent and a service control server link element of the network system"

Petitioner argues that TS-23.140's MMS User Agent teaches or suggests a "service control device link agent" and the MMS Relay/Server and interface MM1 would have been understood to be a "service control server link element of the network system." Pet. 33–35 (citing Ex. 1001,

68:19–40; Ex. 1003 ¶¶ 133, 134); *see also id.* at ii (labeling the limitation "1c1"). Petitioner relies on Ogawa for the required encryption key. *Id.* at 35 (citing Ex. 1003 ¶¶ 135, 136). Petitioner further provides arguments based on Patent Owner's interpretation from related litigation. *Id.* at 35–36 (citing Ex. 1003 ¶ 137).

As discussed above, we find that TS-23.140's MMS User Agent teaches or suggests "a service control device link agent." We credit Petitioner's testimonial evidence that, based on the description in TS-23.140, the MMS Relay/Server would have been understood to teach "a service control server link element of the network system," as the term is used in the '733 patent, because the cited portions of the record support it. Ex. 1001, 68:19–40; Ex. 1003 ¶¶ 133–134; Ex. 1004, 23–24, Fig. 4.

Also, as discussed above, we find that Ogawa describes and shows a shared key from database server 2 and encryption key 52 stored on removable storage 5. Ex. 1005, 3:18–34, 4:48–57, 5:59–65, 6:64–7:21, Figs. 1, 7. We credit Petitioner's testimonial evidence that Ogawa's key in TS-23.140 would have been understood to be shared between the asserted service control device link agent (MMS User Agent) and the service control server link element of the network system (MMS Server/Relay) because the cited portions of the record support it. Ex. 1003 ¶¶ 135–137; Ex. 1004, 42; Ex. 1005, 5:59–65, 6:64–7:21, 9:16–21, 9:24–34, Fig. 7; Ex. 1009, 8:3–5; Ex. 1013, 3.

Patent Owner does not provide a responsive argument regarding the above-quoted limitation. *See* PO Resp. Based on the full record before us, Petitioner persuades us, and we find, that Ogawa teaches or suggests a shared "encryption key" and TS-23.140 teaches or suggests the "service control device link agent" and the "service control server link element of the network system." As discussed below in our analysis of Petitioner's

proposed combination, Petitioner persuades us that one of ordinary skill in the art would have implemented Ogawa's encryption key in TS-23.140 with a reasonable expectation of success.

i) "wherein the service control device link agent is configured to: receive, over the service control link, an encrypted agent message from the service control server link element"

Petitioner argues that MMS User Agent receives over interface MM1 data from MMS Relay/Server. Pet. 36 (citing Ex. 1003 ¶ 138); *see also id.* at ii (labeling the limitation "1d1"). Petitioner also argues that the messages would have been encrypted in the proposed combination. *Id.* at 37 (citing Ex. 1003 ¶ 140). Petitioner further provides arguments based on Patent Owner's interpretation from related litigation. *Id.* (citing Ex. 1003 ¶ 141).

For the reasons discussed above, we find that TS-23.140 teaches or suggests that its MMS User Agent receives data over interface MM1 from MMS Relay Server. We also credit Petitioner's testimonial evidence regarding the wherein clause quoted above and that the received message would be encrypted in the proposed combination because the cited portions of the record support it. Ex. 1003 ¶¶ 138, 140, 141; Ex. 1004, 14, 18, 25, 41; Ex. 1013, 3; Ex. 1014, 3. Patent Owner does not provide a responsive argument regarding the above-quoted limitation. *See* PO Resp.

Based on the full record before us, Petitioner persuades us, and we find, that TS-23.140 teaches or suggests a service control device link agent configured to receive, over the service control link, an agent message from the service control server link element and that, in the proposed combination, the agent message would have been encrypted.

j) "using the encryption key, obtain a decrypted agent message"

For the service control device link agent being configured to obtain a decrypted agent message by using the encryption key, Petitioner argues that, in its proposed combination, encrypted messages are decrypted at the MMS

User Agent. Pet. 37–38 (citing Ex. 1003 ¶ 143); *see also id.* at ii (labeling the limitation "1d2"). Petitioner also provides arguments based on Patent Owner's interpretation from related litigation. *Id.* at 38 (citing Ex. 1003 ¶ 144).

For the reasons discussed above, we find that Ogawa teaches or suggests an encryption key. We also credit Petitioner's testimonial evidence regarding the limitation quoted above, because the cited portions of the record support it. Ex. 1003 ¶¶ 143, 144; Ex. 1004, 19; Ex. 1009, 6:59–7:17, 7:34–40, 8:1–5. Patent Owner does not provide a responsive argument regarding the above-quoted limitation. *See* PO Resp.

Based on the full record before us, Petitioner persuades us that the proposed combination of TS-23.140 and Ogawa would have had a service control device link agent configured to obtain a decrypted agent message using an encryption key.

k) "the decrypted agent message comprising a particular agent identifier and message content for delivery to a particular device agent of the plurality of device agents, the particular agent identifier identifying the particular device agent"

For the limitation quoted above, Petitioner argues that, in its proposed combination, encrypted messages are decrypted at the MMS User Agent to obtain the recited "decrypted agent messages" for applications on other devices. Pet. 39–40 (citing Ex. 1003 ¶¶ 145–148, 151; Ex. 1004, 14, 54–55, 56, 59); *see also id.* at ii (labeling the limitation "1d3"). Petitioner also argues that "destination application identifier" would have been understood to be the recited "particular agent identifier." *Id.* at 40 (citing Ex. 1003 ¶ 149).

The cited portions of TS-23.140 describe that "MMS may also be used to transport data specific to applications" (Ex. 1004, 54–55), that an "application provisions an MMS User Agent or an MMS VAS Application

with its application identification value and may negotiate with the MMS User Agent or MMS VAS Application the details (amount and format) of information to be exchanged between the two entities" (*id.*), and that messages contain "a destination application identifier" and "application/implementation specific control information" (*id.* at 5).

We credit Petitioner's testimonial evidence regarding the recited decrypted agent message because the cited portions of the record support it. Ex. 1003 ¶¶ 145–148; Ex. 1004, 5, 14, 54–55, 56, 69. We also credit the testimony that the "destination application identifier" would have been understood to be the recited "particular agent identifier" because the record also supports it. Ex. 1003 ¶ 149; Ex. 1008 ¶ 22; Ex. 1009 ¶ 22, Fig. 4. Patent Owner does not provide a responsive argument regarding the above-quoted limitation. *See* PO Resp.

Based on the full record before us, Petitioner persuades us that the proposed combination of TS-23.140 and Ogawa would have had a "decrypted agent message comprising a particular agent identifier and message content for delivery to a particular device agent of the plurality of device agents, the particular agent identifier identifying the particular device agent."

l) "the message content from a particular server of a plurality of servers communicatively coupled to the service control server link element"

Petitioner argues that application-specific data from VAS Applications provided by VAS providers communicating through the MMS Relay/Server teach the above-quoted limitation. Pet. 41–42 (citing Ex. 1003 ¶¶ 152–157; Ex. 1004, 23–24, 25–26, 41, 112, Fig. 3); *see also id.* at iii (labeling the limitation "1e").

As discussed above, we find that the MMS Relay/Server of TS-23.140 teaches or suggests a "service control server link element" and that

application-specific data teaches or suggests "the message content." We also find that Petitioner's cited portions of TS-23.140 teach or suggest that MMS VAS Applications on a server associated with a Value-Added Service Provider that communicates with the MMS Relay/Server through interface MM7, and that External Servers #1 through #N are each connected to MMS Relay/Server through interface MM3. Ex. 1004, 23–26, 41, 112, Fig. 3.

We credit Petitioner's testimonial evidence regarding the above-quoted limitation because the cited portions of the record support it. Ex. 1003 ¶¶ 152–157; Ex. 1004, 18, 23–26, 41, 42, 55, 112, 113, Fig. 3. Patent Owner does not provide a responsive argument for the above-quoted limitation. *See* PO Resp.

Based on the full record before us, Petitioner persuades us, and we find, that TS-23.140 teaches or suggests "message content from a particular server of a plurality of servers communicatively coupled to the service control server link element."

m) "based on the particular agent identifier, deliver the message content to the particular device agent over the agent communication bus"

For the limitation quoted above, Petitioner argues that, in its proposed combination, the MMS User Agent delivering application-specific data to a destination application based on a destination application identifier would have been understood to occur over an "agent communication bus." Pet. 42 (citing Ex. 1003 ¶ 158); *see also id.* at iii (labeling the limitation "1f").

As discussed above, we find that the MMS User Agent teaches or suggests a "service control device link agent" that delivers application-specific data to a destination application using an identifier included in the message. Also, as discussed above, we determine that one of ordinary skill in the art would have understood that the delivery of the message content would occur over an "agent communication bus." We further credit

Petitioner's testimonial evidence regarding the above-quoted limitation based on our above determinations. Ex. 1003 ¶ 158. Patent Owner does not provide a responsive argument regarding the above-quoted limitation other than arguments asserted for the "agent communication bus." *See* PO Resp.

Based on the full record before us, Petitioner persuades us, and we find, that TS-23.140 teaches, suggests, or would have been understood to have a service control device link agent configured to, "based on the particular agent identifier, deliver the message content to the particular device agent over the agent communication bus."

n) Petitioner's Asserted Reason for Combining

(1) modem

Petitioner argues that TS-23.140 would have been implemented with a modem because "it was well-known to use a ***modem*** to enable communications over the networks described in TS-23.140," "would have been a conventional and obvious way to implement what TS-23.140 describes," and would have been "nothing more than utilizing familiar, known components to achieve a predictable result of facilitating TS-23.140's communications." Pet. 9–10 (citing Ex. 1003 ¶¶ 61–63; Ex. 1004, 14, 17–19, 23–24; Ex. 1008 ¶¶ 27–28, 44, Figs. 1, 4); *see also id.* at 19 (summarizing the proposed combination). Petitioner also argues that there would have been a reasonable expectation of success in implementing a modem in TS-23.140. *Id.* at 10 (citing Ex. 1003 ¶ 63).

We find that the cited portions of the record show that modems were known for enabling communication over networks, such as those described in TS-23.140. Ex. 1004, 14, 17–19, 23–24; Ex. 1008 ¶¶ 27–28, 44, Figs. 1, 4. We credit Petitioner's testimonial evidence regarding modems and that one of ordinary skill in the art would have implemented TS-23.140 to include a modem with a reasonable expectation of success because the cited

portions of the record support the testimony. Ex. 1003 ¶¶ 61–63; Ex. 1004, 14, 17–19, 23–24; Ex. 1008 ¶¶ 27–28, 44, Figs. 1, 4.

Patent Owner does not dispute that one of ordinary skill in the art would have implemented TS-23.140 with a modem with a reasonable expectation of success, as argued by Petitioner. *See* PO Resp.

(2) SSL/TLS

According to Petitioner, "TS-23.140 explains that network communications between the MMS User Agent and the MMS Relay/Server use the MM1 Transfer Protocol." Pet. 10 (citing Ex. 1003 ¶¶ 64–65; Ex. 1004, 24, Fig. 4; Ex. 1018). Petitioner argues that one of ordinary skill in the art would have secured MM1 with an SSL/TLS protocol because "it was conventional and well-known for client-server communications to use SSL/TLS to achieve secure communications," "TS-23.140 contemplates implementations which use 'transport layer security mechanisms' (*e.g.*, SSL/TLS) to secure communication links," and "such an implementation is nothing more than utilizing familiar, known protocols to achieve a predictable result." *Id.* at 10–11 (citing Ex. 1003 ¶¶ 66–69); *see also id.* at 19 (summarizing the proposed combination). Petitioner also argues that there would have been a reasonable expectation of success in implementing MM1 to use SSL/TSL. *Id.* at 11 (citing Ex. 1003 ¶ 70).

We find that the cited portions of the record support that one of ordinary skill in the art would have used SSL/TLS protocol for the reasons asserted by Petitioner, and that such use would have had a reasonable expectation of success. Ex. 1003 ¶¶ 64–70; Ex. 1004, 24, Fig. 4; Ex. 1018. We credit Petitioner's testimonial evidence because the record supports it. Ex. 1003 ¶¶ 64–70; Ex. 1004, 24–25, 55, Fig. 4; Ex. 1010, 1:38–42; Ex. 1012, 21; Ex. 1013, 3; Ex. 1018.

Patent Owner does not dispute that one of ordinary skill in the art would have secured MM1 with SSL/TLS protocol for the reasons argued by Petitioner with a reasonable expectation of success. *See* PO Resp.

(3) encryption

Petitioner argues that "TS-23.140 does not provide details regarding how to implement additional end-user-to-end-user encryption beyond SSL/TLS." Pet. 12 (citing Ex. 1003 ¶¶ 71–72). According to Petitioner, "it was well-known to implement encryption for messages transmitted by a push server (e.g., TS-23.140's MMS Relay/Server) to an end-user device using symmetric encryption, with a key that is shared between the server and the end-user device and stored in their respective memories" and Ogawa discloses how to implement symmetric encryption. *Id.* (citing Ex. 1003 ¶¶ 72, 73; Ex. 1005, 3:61–4:4, 9:16–34).

Petitioner contends that one of ordinary skill in the art would have implemented Ogawa's symmetric data encryption technique because it "would have achieved a system 'having improved security' and providing 'an end-user to end-user' security solution for MMS applications," "would have been particularly beneficial for 'enterprise applications,'" and would have been implementing a known method or technique to a known system or device to achieve predictable results. Pet. 12–13 (citing Ex. 1003 ¶¶ 74–76) *see also id.* at 19 (summarizing the proposed combination). Petitioner also contends that there would have been a reasonable expectation of success. *Id.* at 13 (citing Ex. 1003 ¶¶ 77–79).

Petitioner also argues that one of ordinary skill in the art would have implemented Ogawa's decryption and encryption units in TS-23.140 because, for example, it would have "beneficially allowed the MMS User Agent to decrypt an encrypted message," and the ability to "securely store data on a user device was a desirable feature that would have helped prevent,

e.g., theft." Pet. 13–15 (citing Ex. 1003 ¶¶ 80–82) *see also id.* at 19 (summarizing the proposed combination). Petitioner further argues that there would have been a reasonable expectation of success. *Id.* at 15 (citing Ex. 1003 ¶ 83).

We find that the cited portions of the record support that it was known to implement symmetric encryption in message transmissions like those in TS-23.140 and that Ogawa discloses how to implement symmetric encryption. Ex. 1003 ¶¶ 72, 73; Ex. 1005, 3:61–4:4, 9:16–34; Ex. 1009, 3:25–27, 8:1–5; Ex. 1027 ¶¶ 54–60. We also credit Petitioner's testimonial evidence that one of ordinary skill in the art would have implemented Ogawa's decryption and encryption units in TS-23.140 for the reasons asserted by Petitioner, and that such implementation would have had a reasonable expectation of success, because the cited portions of the record support it. Ex. 1003 ¶¶ 71–72, 74–83; Ex. 1004, 14, 17, 19, 24–25, 41, 54–56, 62; Ex. 1005, 3:60–4:4, 4:34–57, 5:59–6:9, 6:64–7:21, 8:16–19, 9:16–34, Fig. 7; Ex. 1009, 3:25–27, 8:1–5; Ex. 1012, 21; Ex. 1027 ¶¶ 17, 21–22, 54–60.

Patent Owner does not dispute that one of ordinary skill in the art would have implemented Ogawa's decryption and encryption units in TS-23.140. *See* PO Resp.

(4) memory

Petitioner contends that Ogawa teaches the well-known technique of storing an encryption key in memory connected to each device that encrypts or decrypts communications. Pet. 15 (citing Ex. 1003 ¶ 84; Ex. 1005, 3:18–34, 4:48–57, 5:59–65, 6:64–7:21, Figs. 1, 7). Petitioner also contends that there were limited ways of ensuring that the same key is used. *Id.* at 15–16 (citing Ex. 1003 ¶ 85).

In Petitioner's view, one of ordinary skill in the art would have stored Ogawa's key in the memory of the user device in TS-23.140 "to facilitate decryption of encrypted messages received from the MMS Relay/Server" and "to implement the symmetric encryption teachings of Ogawa." Pet. 16–17 (citing Ex. 1003 ¶¶ 87, 88; Ex. 1005, 3:61–4:7, 5:41–47, 9:21–34, Fig. 7). Petitioner also argues that the proposed modification would have been implementing a known method to known systems to achieve a predictable result and would have been a design choice. *Id.* at 18 (citing Ex. 1003 ¶¶ 89–94; Ex. 1009, 3:25–27). Petitioner further argues that there would have been a reasonable expectation of success. *Id.* (citing Ex. 1003 ¶ 95).

We find that the cited portions of Ogawa teach storing an encryption key in memory connected to each device that encrypts or decrypts communications. Ex. 1003 ¶ 84; Ex. 1005, 3:18–34, 4:48–57, 5:59–65, 6:64–7:21, Figs. 1, 7. Because the cited portions of the record support it, we also credit Petitioner's testimonial evidence that (1) one of ordinary skill in the art would have stored Ogawa's key in the memory of the user device in TS-23.140 for the reasons asserted by Petitioner, (2) the proposed modification would have been implementing a known method to known systems to achieve a predictable result, and (3) the modification would have been a design choice. Ex. 1003 ¶¶ 87–94; Ex. 1005, 3:61–4:7, 5:41–58, 5:60–65, 6:64–7:21, 9:21–34, Fig. 7; Ex. 1009, 3:25–27. We further credit Petitioner's testimonial evidence that there would have been a reasonable expectation of success in making the modification because it was within ordinary skill in the art. Ex. 1003 ¶ 95.

Patent Owner does not dispute that one of ordinary skill in the art would have made the proposed modification. *See* PO Resp.

(5) agent communication bus

Petitioner argues that one of ordinary skill in the art would have implemented communications between the MMS User Agent and other applications over a bus, such as a D-bus. Pet. 30 (citing Ex. 1003 ¶ 125). Petitioner contends that using a bus would have been "nothing more than utilizing familiar, known components to achieve a predictable result of facilitating TS-23.140's user agent and other applications to interface with one another." *Id.* at 30–31 (citing Ex. 1003 ¶ 125). In Petitioner's view, there would have been a reasonable expectation of success in such implementation. *Id.* at 31 (citing Ex. 1003 ¶¶ 125–126).

(a) Patent Owner's Response

Patent Owner responds that Petitioner fails to show that TS-23.140 would have rendered obvious "a plurality of device agents communicatively coupled to the service control device link agent through an agent communication bus." PO Resp. 6 (citing Pet. 28–31), 11–12. As summarized above, Patent Owner argues, with citations to the record, that destination applications are part of an MMS User Agent. PO Resp. 7–9.

Specifically for Petitioner's alternative obviousness contention, Patent Owner argues that:

> it would not be obvious to use an "agent communication bus" to route data from the MMS User Agent to the various destination subapplications residing on the MMS User Agent, because "buses in computing are typically used to route data ***outside*** of a given application, not ***internal*** to an application (e.g., to subparts or subapplications within that application)."

PO Resp. 9 (citing Ex. 2001 ¶ 37). Patent Owner also argues that Petitioner's examples of buses are used for communications external to, not within, an application. *Id.* at 9–10 (citing Ex. 2001 ¶ 37). Patent Owner further argues that one of ordinary skill in the art would have known that "standard function calls" are used to direct data to subapplications and that

an agent communication bus is not needed or desirable. *Id.* at 10 (citing Ex. 2001 ¶¶ 38, 49–50).

Regarding Petitioner's supporting testimony, Patent Owner argues that the opinion is not credible because it assumes incorrectly and without evidence that the description of destination applications "resid[ing] on [an] MMS User Agent" refers to a device or user equipment, not the MMS User Agent. PO Resp. 10 (citing Ex. 1003 ¶ 51; Ex. 2001 ¶¶ 41–48). Patent Owner also argues that Petitioner ignores that TS-23.140's destination applications are subapplications or subparts of a MMS User Agent, and that there is no evidence that it would have been obvious to use an agent communication bus to manage data flow within the MMS User Agent. *Id.* at 11.

(b) Petitioner's Reply

As summarized above, Petitioner replies with citations to the record that Patent Owner's interpretation of "agent communication bus" is unsupported. Pet. Reply 4–6, 8–10. Petitioner also replies as summarized above that TS-23.140 and Ogawa would have rendered obvious "agent communication bus" under either party's proposed interpretation. Pet. Reply 10–25.

Petitioner further argues as it did in the Petition that it would have been obvious to implement a bus for communications between the MMS User Agent and the destination applications, and that such buses were known, contrary to Patent Owner's suggestion. Pet. Reply 12 (citing Pet. 30–31; Ex. 1045, 3, 16–17, 20, 64, 96, 156–157; Ex. 1048 ¶¶ 1, 3, 4, 19; Ex. 1050, 2:64–3:6, 3:51–67, Fig. 5). In Petitioner's view, Patent Owner's arguments rest on the flawed premise that destination applications are subapplications of the MMS User Agent, and that, even if the destination applications were subapplications, Patent Owner provides no credible basis

to disregard Petitioner's declarant. *Id.* at 13–14 (citing Pet. 30–31; PO Resp. 9–10; Ex. 1003 ¶¶ 124–126). Petitioner argues that Patent Owner's declarant bolsters that one of ordinary skill in the art would have had reason to use an "agent communication bus" to transport data from the MMS User Agent to a separate application. *Id.* at 24–25 (citing PO Resp. 9; Ex. 1003 ¶¶ 125–126; Ex. 2001 ¶ 37).

(c) Patent Owner's Sur-Reply

Patent Owner replies that Petitioner fails to provide a motivation to use a bus in TS-23.140 for intra-application communications. PO Sur-reply 1 (citing Pet. 30; Ex. 1003 ¶¶ 124–126), 2. In Patent Owner's view, Petitioner fails to provide a reason why one of ordinary skill in the art "would have implemented TS-23.140 messaging to destination applications as a 'bus' other than that 'it was well-known" and "doing so would have been simply using 'familiar, known components to achieve a predictable result.'" PO Sur-reply 12 (citing Pet. 30), 20–21. Patent Owner argues that Petitioner's analysis "was premised on the false assumption that destination applications were ***outside*** of the User Agent application." *Id.*

Patent Owner contends that, even if the cited references did show a bus used for intra-application communication, Petitioner only shows TS-23.140 could have been, not would have been, modified to use a bus. PO Sur-reply 18, 20–21 (citing Pet. Reply 4–10). Patent Owner also contends that Petitioner fails to rebut that a bus was not typically used for intra-application communication. *Id.* at 18–19 (citing Ex. 2001 ¶¶ 36–38, 49–50), 21. According to Patent Owner, one of ordinary skill in the art would have known of standard function calls for intra-application data, and it would not have been obvious to use a bus for that purpose. *Id.* at 1, 19–20 (citing Pet. Reply 15; Ex. 2001 ¶ 38).

(d) Petitioner Shows that an Agent Communication Bus Would Have Been Implemented

As discussed above, Petitioner persuades us that one of ordinary skill in the art would have understood that the asserted device agents (destination applications) are communicatively coupled to the asserted service control device link agent (MMS User Agent) through an "agent communication bus," in accordance with the usage of the term in the '733 patent. Pet. 30; Ex. 1001, 42:48–61; Ex. 1003 ¶¶ 123, 124; Ex. 1004, 54; Ex. 1038, 24.

To the extent required, Petitioner also persuades us that one of ordinary skill in the art would have implemented a bus for communications between the destination applications and the MMS User Agent. Pet. 30. As discussed above, we find that TS-23.140 does not describe destination applications as subapplications of the MMS User Agent. Also, as discussed above, TS-23.140 makes clear that the MMS User Agent communicates with destination applications.

We credit Petitioner's testimonial evidence that a bus was known for inter-process communication and would have been a conventional way to implement what TS-23.140 describes, because the cited portions of the record support it. Ex. 1003 ¶ 125; Ex. 1008 ¶ 28, Fig. 4; Ex. 1028, 732–733; Ex. 1031, 10:56–62. Because Petitioner shows that a bus was a known way to implement TS-23.140, we credit Petitioner's testimonial evidence that using such a bus would have been using a known component to achieve the predictable result of providing the described communications between the MMS User Agent and destination applications. Ex. 1003 ¶ 126. "The combination of familiar elements according to known methods is likely to be obvious when it does no more than yield predictable results." *KSR,* 550 U.S. at 416. We also credit the testimony that the implementation would have had a reasonable expectation of success. Ex. 1003 ¶ 126. Petitioner also

cites record evidence that corroborates the proposed implementation. Ex. 1003 ¶ 125; Ex. 1008 ¶ 28, Fig. 4.

Turning to Patent Owner's responsive arguments, we find, for the reasons discussed above, that TS-23.140 does not describe its destination applications as only subapplications of MMS User Agent. Also, knowledge that "standard function calls" could have been used, instead of a bus, does not show a defect in Petitioner's proposed implementation of a communication bus in TS-23.140. Patent Owner's other arguments are addressed above.

o) Objective Indicia of Non-obviousness

Patent Owner does not present any arguments or evidence regarding any objective indicia of nonobviousness for any of the challenged claims. *See* PO Resp.

p) Petitioner Shows by a Preponderance of the Evidence that Claim 1 is Unpatentable

"Once all relevant facts are found, the ultimate legal determination [of obviousness] involves weighing of the fact findings to conclude whether the claimed combination would have been obvious to an ordinary artisan." *Arctic Cat Inc. v. Bombardier Recreational Prods. Inc.*, 876 F.3d 1350, 1361 (Fed. Cir. 2017) (quoting *In re Cyclobenzaprine Hydrochloride Extended-Release Capsule Patent Litig.*, 676 F.3d 1063, 1068–69 (Fed. Cir. 2012)). Above, based on full record before us, we provide our factual findings regarding (1) the level of ordinary skill in the art, (2) the scope and content of the prior art, (3) any differences between the claimed subject matter and the prior art, and (4) objective evidence of nonobviousness.

In particular, we find that (1) Patent Owner's proposed level of ordinary skill in the art is consistent with the prior art of record, (2) TS-23.140 and Ogawa teach, suggest, or would have been understood to

disclose all the limitations of claim 1, (3) one of ordinary skill in the art would have combined TS-23.140 and Ogawa in the manner asserted by Petitioner with a reasonable expectation of success, and (4) no objective evidence of nonobviousness has been presented in relation to any of the challenged claims. Weighing these underlying factual determinations, a preponderance of the evidence persuades us that claim 1 of the '733 patent is unpatentable over TS-23.140 and Ogawa. *Arctic Cat*, 876 F.3d at 1361.

4. Dependent Claims 2–17, 19, 21–27, and 29

Claims 2–17, 19, 21–27, and 29 depend, directly or indirectly, from claim 1. Petitioner contends that TS-23.140 alone or TS-23.140 combined with Ogawa teaches or suggests the recitations of these claims. Pet. 43–76. Petitioner supports the contentions with declaration testimony that we credit because the cited portions of the record support it. *Id.*

We determine that Petitioner's contentions regarding these dependent claims are fully supported by the record. Patent Owner does not additionally dispute Petitioner's challenges to these claims apart from its contentions regarding claim 1. *See* PO Resp. Weighing the underlying factual determinations, a preponderance of the evidence persuades us that claims 2–17, 19, 21–27, and 29 of the '733 patent are unpatentable over TS-23.140 and Ogawa.

5. Independent Claim 30

Petitioner presents arguments for independent claim 30 together with its arguments for claim 1. *See* Pet. 20, 24–31, 33–42. For the reasons discussed above for claim 1, we find that TS-23.140 and Ogawa teach, suggest, or would have been understood to disclose the limitations of claim 30. We also determine that one of ordinary skill in the art would have combined TS-23.140 and Ogawa in the manner asserted with a reasonable

expectation of success. Patent Owner does not provide responsive arguments specifically for independent claim 30. *See* PO Resp. 6–12.

Weighing the underlying factual determinations, a preponderance of the evidence persuades us that claim 30 of the '733 patent is unpatentable over TS-23.140 and Ogawa.

III. CONCLUSION[3]

In summary:

Claims	35 U.S.C. §	References/Basis	Claims Shown Unpatentable	Claims Not Shown Unpatentable
1–17, 19, 21–27, 29, 30	103(a)	TS-23.140, Ogawa	1–17, 19, 21–27, 29, 30	
Overall Outcome			1–17, 19, 21–27, 29, 30	

[3] Should Patent Owner wish to pursue amendment of the challenged claim in a reissue or reexamination proceeding subsequent to the issuance of this decision, we draw Patent Owner's attention to the April 2019 *Notice Regarding Options for Amendments by Patent Owner Through Reissue or Reexamination During a Pending AIA Trial Proceeding.* *See* 84 Fed. Reg. 16,654 (Apr. 22, 2019). If Patent Owner chooses to file a reissue application or a request for reexamination of the challenged patent, we remind Patent Owner of its continuing obligation to notify the Board of any such related matters in updated mandatory notices. *See* 37 C.F.R. § 42.8(a)(3), (b)(2).

IV. ORDER

In consideration of the foregoing, it is hereby:

ORDERED that claims 1–17, 19, 21–27, 29, 30 of U.S. Patent No. 8,406,733 B2 have been shown, by a preponderance of the evidence, to be unpatentable; and

FURTHER ORDERED that, because this is a Final Written Decision, the parties to the proceeding seeking judicial review of the decision must comply with the notice and service requirements of 37 C.F.R. § 90.2.

FOR PETITIONER:

W. Karl Renner
Jeremy Monaldo
Karan Jhurani
Turhan Sarwar
Parvin Ghane
FISH & RICHARDSON P.C.
axf-ptab@fr.com
jjm@fr.com
jhurani@fr.com
TSarwar-PTAB@wolfgreenfield.com
ghane@fr.com

FOR PATENT OWNER:

Reza Mirzaie
Dale Chang
James Milkey
Neil Rubin
Philip X. Wang
RUSS, AUGUST & KABAT
rmirzaie@raklaw.com
dchang@raklaw.com

jmilkey@raklaw.com
nrubin@raklaw.com
pwang@raklaw.com