UNITED STATES DISTRICT COURT
FOR THE WESTERN DISTRICT OF TEXAS
MIDLAND-ODESSA DIVISION

HEADWATER RESEARCH LLC, Plaintiff, v. AMAZON.COM SERVICES LLC AND AMAZON WEB SERVICES, INC., Defendants.	Case No. 7:25-cv-00286-ADA **JURY TRIAL DEMANDED**

DEFENDANTS' REPLY IN SUPPORT OF
MOTION TO STAY PENDING *INTER PARTES* REVIEW

TARGET 1080
TARGET V. HEADWATER
IPR2026-00154

TABLE OF CONTENTS

I. INTRODUCTION 1
II. ARGUMENT 1
A. A Stay Would Not Unduly Prejudice Headwater 1
B. A Stay Will Simplify the Issues in This Case 3
C. This Case Remains in Its Infancy—as Headwater Concedes 5
III. CONCLUSION 5

I. INTRODUCTION

Defendants' Motion to Stay Pending *Inter Partes* Review should be granted. Headwater's Opposition rests on conclusory assertions that would apply to nearly all cases where a party seeks a stay early in the life of a case. It ignores that courts in this District often grant stays under similar circumstances, *i.e.*, where IPRs may eliminate all issues before the Court, and where the motion to stay is filed before fact discovery and claim construction. And while Defendants' IPRs have not been instituted, decisions are expected in 4 months, and the PTAB instituted a nearly identical petition on the '192 Patent in a now-settled action. *Samsung Elecs. Co. Ltd. v. Headwater Research LLC*, IPR2024-00010, Paper 7 (May 23, 2024). All relevant factors favor a stay.

II. ARGUMENT

A. A Stay Would Not Unduly Prejudice Headwater

Headwater waited six years to file suit against Amazon and seeks only monetary damages. Mot. at 5. Its generic arguments about prejudice—which apply in the same way to almost any early-stage case—should be disregarded.

For example, Headwater raises the potential that evidence may be lost during the stay. Opp. at 2. But such "vague assertions about the loss of evidence and witnesses are not sufficient to justify a conclusion of undue prejudice." *Sterling Computers Corp. v. X Corp.*, 1:24-CV-552-DII, 2025 WL 943411, at *1 (W.D. Tex. Feb. 13, 2025) (cleaned up). Here, Headwater refers to the risk of losing evidence from Google without articulating any specific concerns. Opp. at 3. Nor can it. ***Headwater will obtain relevant evidence from Google whether this case is stayed or not*** because it has accused Google of infringing the same patents with the same Google platform (FCM) in co-pending litigation. Mot. at 7, n.3[1]; *Sonrai Mem Ltd. v. Western Dig. Techs, Inc.*, 6:21-cv-1168-ADA, 2022 WL 3108818, at *2 (W.D. Tex. Aug. 4, 2022) ("[t]he risk [of loss of evidence] is less pronounced where" stayed case implicates similar discovery as co-pending

[1] *Headwater Rsch. LLC v. Google LLC*,. 7:25-cv-00231-DC-DTG (W.D. Tex.) ECF Nos. 28-1 ('192 Patent FCM chart) & 28-2 ('320 Patent FCM chart).

litigation). At worst, a stay would resolve infringement issues pertaining to Google's platform in that case—where Google is the Defendant—before this case proceeds.

Headwater also contends that it will be unduly prejudiced because a stay pending IPR may span "2+ years." Opp. at 2. But it overlooks that such a delay would be true for virtually every IPR. It also overlooks the weight of the authority in this District, which holds that staying litigation in view of IPRs does not result in undue prejudice where, as here: (1) the final written decisions ("FWD") are expected before trial; (2) the parties are not competitors; and (3) the plaintiff only seeks monetary relief. *See*, *e.g.*, *Kirsch Rsch. & Dev., LLC v. Tarco Specialty Prods., Inc.*, 6:20-CV-00318-ADA, 2021 WL 4555804, at *2 (W.D. Tex. Oct. 4, 2021) (no undue prejudice to plaintiff where FWD predates trial); *Xylon Licensing LLC v. Lone Star Nat. Bankshares-Texas, Inc.*, 6:21-CV-00302-ADA, 2022 WL 2078030, at *2 (W.D. Tex. June 8, 2022) (no undue prejudice where FWD expected before trial date set by Court's standing order). *See also* Mot. at 4–5 (collecting cases). Every contrary case cited by Headwater is distinguishable on this basis.[2] And Headwater's position is even less credible given its erroneous view that institution will almost certainly be denied. Opp. at 2–3. "A delay of a few months while the PTAB determines whether to institute IPR will not unduly prejudice [Headwater]." *UMBRA Techs. Ltd. (UK) v. Cisco Sys., Inc.*, 1:23-CV-903-DII, 2024 WL 2155274, at *2 (W.D. Tex. Apr. 25, 2024). Simply put, Headwater would have filed suit six years ago if timely enforcement was a significant concern.

Headwater's assertion of unfair tactical advantage is similarly misplaced. *See* Opp. at 4–5. Litigating with the benefit of a complete IPR record is not a source of unfair tactical advantage; in this District, it is among the "most important factor[s]" *favoring* stays. *See*, *e.g.*, *Polaris Powered Techs., LLC v. Dell Techs. Inc.*, 1:22-CV-0973-RP, 2023 WL 5282381, at *2–3 (W.D. Tex. Aug.

[2] *USC IP P'ship, L.P. v. Facebook, Inc.*, 6-20-CV-00555-ADA, 2021 WL 6201200, at *2 (W.D. Tex. Aug. 5, 2021) (FWD 6 months after trial); *Datanet LLC v. Dropbox Inc.*, 6:22-CV-01142OLGDTG, 2023 WL 9005604 (W.D. Tex. Dec. 28, 2023) (FWDs 2–10 months after trial); *UNM Rainforest Innovations v. TP-Link Techs. Co.*, 6:19-CV-00262-ADA, 2023 WL 2638273, at *2 (W.D. Tex. Mar. 24, 2023) (denying stay pending appeal over claim substitution issue not present here); *Maxell Ltd. v. Apple Inc.*, 5:19-CV-00036-RWS, 2020 WL 10456915, at *2 (E.D. Tex. Apr. 27, 2020) (*institution* decisions 1 month before trial); *Sable Networks, Inc. v. Splunk Inc.*, 5:21-CV-00040-RWS, ECF 77 at 4–5 (E.D. Tex. Nov. 1, 2021) (FWD 4–5 months after trial).

15, 2023) (simplification of proceedings is the "most important factor" in part because the "*Markman* process would be simplified by any claim construction or other analysis conducted by the PTO"); *Xylon*, 2022 WL 2078030, at *3 (same).

Headwater ignores this basic proposition, relying instead on two cases that involve inapplicable extenuating circumstances. Opp. at 5; *Prytime Med. Device, Inc. v. Front Line Med. Techs., Inc.*, 6:24-CV-00001-RP-DTG, ECF 37 at 6–7 (W.D. Tex. July 16, 2024) (finding unfair tactical advantage in a competitor-to-competitor case where—unlike here—the stay would predate preliminary invalidity contentions and claim construction disclosures); *CANVS Corp. v. United States*, 118 Fed. Cl. 587, 597 (2014) (finding unfair tactical advantage where plaintiff delayed filing IPR until late in the litigation, increasing litigation costs). To the contrary, this Court consistently finds filing a motion to stay early in the case weighs in favor of a stay. *See*, *e.g.*, Mot. at 8–9 (collecting cases).

Headwater is dramatically increasing the cost and complexity of this litigation—to its own tactical advantage—by asserting the same patents against the same Google instrumentality in six actions across two separate districts. Mot. at 7–8. Its conclusory, unsubstantiated claims of prejudice should not be credited. This factor favors a stay.

B. A Stay Will Simplify the Issues in This Case

A stay in this case has a substantial likelihood of simplifying the issues—if not resolving the underlying litigation entirely—because Defendants' IPR petitions challenge every claim asserted in this case. *See R2 Sols. LLC v. Cloudera, Inc.*, 1:23-cv-1205-RP, 2024 WL 666660, at *1 (W.D. Tex. Feb. 15, 2024) (granting pre-institution stay where every asserted claim is challenged); *Relink US LLC v. Tesla, Inc.*, 1:23-CV-1093-DII, 2024 WL 1219740, at *2 (W.D. Tex. Mar. 21, 2024) (same).

As a threshold matter, Headwater's assertion that it is "a universal practice to deny pre-institution motions to stay" is incorrect. Opp. at 7 (quoting *Trover Grp., Inc. v. Dedicated Micros USA*, No. 2:13-CV-1047-WCB, 2015 WL 1069179 (E.D. Tex. Mar. 11, 2015)). Headwater cites a single out-of-district case in support of this proposition. To the contrary, courts in this District have

granted pre-institution motions to stay where—as here—doing so simplifies issues. *See*, *e.g.*, Mot. at 8 (collecting cases). *See also One-E-Way, Inc. v. Dell Techs. Inc.*, 1:24-CV-1558-RP, 2025 WL 3251550 (W.D. Tex. Oct. 29, 2025) (granting pre-institution motion to stay); *SitePro, Inc. v. Tanklogix, LLC*, 6:24-cv-00643-XR-DTG, ECF 28, 34, 36 (W.D. Tex. Aug. 28, 2025) (same); *R2 Sols.*, 2024 WL 666660 (same); *UMBRA*, 2024 WL 2155274 (same).

Headwater's remaining arguments about the scope of IPR estoppel appear to be based on the misconception that estoppel somehow would not apply to this case. *See* Opp. at 8–9.[3] Amazon stipulated that if its IPRs are instituted, it "***will forgo invalidity in the district court based on 'any ground that [it] raised or reasonably could have raised during' the IPR***." *See* Ta Decl. Exs. 6 (IPR2026-00088, Ex. Amazon-1046) & 7 (IPR2026-00106, Ex. Amazon-1050) (emphasis added). *Ingenico* does not create a "loophole" to this stipulation—as Headwater suggests (Opp. at 8)—it merely confirms that IPR estoppel only applies to grounds that the petitioner raised or could reasonably have raised in IPR. *See Ingenico Inc. v. IOENGINE, LLC*, 136 F.4th 1354, 1366 (Fed. Cir. 2025). It does not change that, in view of its stipulation, Amazon would be precluded from relying on grounds based purely on patents or printed publications, *i.e.*, ***21 of the 23 prior art references*** asserted in Amazon's preliminary invalidity contentions. That is simplification. *See* Ex. 8 at 11–14. *See also Sonrai Mem. Ltd. v. Western Dig. Techs., Inc.*, 6:21-cv-01168-ADA, 2022 WL 3108818, at *3 (W.D. Tex. Aug. 4, 2022) (staying case over objections that IPR estoppel does not apply to asserted prior art systems).

Finally, Headwater's cites a recent increase in institution denials (Opp. at 3), but, as this Court recently noted, "merely [citing] summary PTAB statistics, without explaining how those statistics have any bearing on whether the IPR petition[s] in this case [are] likely to be granted" is not evidence that an IPR is unlikely to simplify issues before the Court. *Wound Healing Techs.*

[3] In fact, this factor often favors a stay when IPR estoppel does not apply. *See, e.g.*, *Polaris*, 2023 WL 528381, at *3 (simplification favors stay despite "estoppel [] not apply[ing] to Defendants"); *DataEnergetics Eur. GmbH v. GR Energy. Servs. Operating GP LLC*, 6:21-cv-00085-ADA, 2022 WL 22579584, at *1 (W.D. Tex. Mar. 14, 2022) (denying motion to reconsider staying case where "defendants [] are not bound by estoppel").

Corp. v. Solventum Corp., 6:24-cv-589-RP, 2025 WL 3002063, at *1 (W.D. Tex. Aug. 7, 2025). Here, the merits of Amazon's IPR petitions are stronger than general statistics might suggest as the two asserted patents have nearly identical claims, and the PTAB previously instituted a petition challenging the '192 Patent with overlapping prior art in a now-settled IPR. Exs. 9, 10 (IPR2024-00010, Papers 7, 27). The challenged claims of two related patents were also recently invalidated in IPRs.[4] In any case, this litigation will benefit even if institution is denied because the IPR briefing and decisions will supplement the intrinsic record for claim terms that are given their plain and ordinary meaning.

In short, the IPRs will simplify—or eliminate—this litigation. This factor favors a stay.

C. This Case Remains in Its Infancy—as Headwater Concedes

Because fact discovery has not commenced and claim construction briefing has not even started, the stage of this case supports a stay. *See* Mot. at 8–9. Headwater concedes this point by emphasizing that the IPRs are still awaiting institution. But that is not relevant to this factor, as Headwater's own case recognizes. *See* Opp. at 10; *AR Design Innovations LLC v. Ashley Furniture Indus., Inc.*, 4:20-cv-393-SDJ, 2021 WL 6496714, at *4 (E.D. Tex. Jan. 11, 2021). This District has granted stays even in more advanced cases. *See* Mot. at 8–9. Headwater also ignores perhaps the most important timing factor: FWDs for the IPRs will be expected by May 2027, before the June 2027 trial setting here. *See*, *e.g.*, *Xylon*, 2022 WL 2078030, at *3.

III. CONCLUSION

For the foregoing reasons, Defendants respectfully request that this Court grant their Motion to Stay Pending *Inter Partes* Review.

[4] Ex. 11 (IPR2024-00341, Paper 28 (Jul. 23, 2025) (invalidating challenged claims of U.S. Patent No. 8,406,733)); Ex. 12 (IPR2024-00942-IPR2024-00943, Paper 20 (Oct. 1, 2025) (invalidating challenged claims of U.S. Patent No. 8,589,541)).

DATED: January 13, 2026

By: */s/ Janice L. Ta*

Thomas N. Millikan, CA SBN 234430
Email: *TMillikan@perkinscoie.com*
PERKINS COIE LLP
11452 El Camino Real, Ste. 300
San Diego, CA 92130
Tel. 858-720-5700

Janice L. Ta, TX SBN 24075138
Email: *JTa@perkinscoie.com*
PERKINS COIE LLP
405 Colorado Street, Ste. 1700
Austin, TX 78701
Tel. 737-256-6120

Nathaniel B. Sabri, *pro hac vice*
Email: *NSabri@perkinscoie.com*
Mathieu A. Swiderski, *pro hac vice*
Email: *MathieuSwiderski@perkinscoie.com*
PERKINS COIE LLP
505 Howard Street, Ste. 1000
San Francisco, CA 94105
Tel. 415-344-7000

David R. Pekarek Krohn, WI SBN 1092062
Email: DPekarekkrohn@perkinscoie.com
Adam Hester, WI SBN 1128794
Email: AHester@perkinscoie.com
PERKINS COIE LLP
33 East Main Street, Suite 201
Madison, WI 53703
Tel. 608-663-7496

Deron R. Dacus, TX SBN 00790553
Email: *ddacus@dacusfirm.com*
THE DACUS FIRM
821 ESE Loop 323
Tyler, TX 75701
Tel. 903-705-1117

ATTORNEYS FOR DEFENDANTS Amazon.com Services LLC and Amazon Web Services, Inc.

CERTIFICATE OF SERVICE

I hereby certify that a true and correct copy of the above and foregoing document has been served on all parties of record via the Court's CM/ECF system on January 13, 2026.

/s/ Janice L. Ta
Janice L. Ta

UNITED STATES DISTRICT COURT
FOR THE WESTERN DISTRICT OF TEXAS
MIDLAND-ODESSA DIVISION

HEADWATER RESEARCH LLC, Plaintiff, v. AMAZON.COM SERVICES LLC AND AMAZON WEB SERVICES, INC., Defendants.	Case No. 7:25-cv-00286-ADA **JURY TRIAL DEMANDED**

DECLARATION OF JANICE L. TA IN SUPPORT OF DEFENDANTS' REPLY IN SUPPORT OF MOTION TO STAY PENDING *INTER PARTES* REVIEW

I, Janice L. Ta, hereby declare as follows:

1. I am an attorney with the law firm of Perkins Coie LLP, and counsel of record for Defendants Amazon.com Services LLC and Amazon Web Services, Inc. in this case. I submit this declaration in support of Defendants' Reply in Support of Motion to Stay Pending *Inter Partes* Review.

2. Attached as Exhibit 6 is a true and correct copy of a stipulation letter in IPR2026-00088, Ex. Amazon-1046, dated December 23, 2025.

3. Attached as Exhibit 7 is a true and correct copy of a stipulation letter in IPR2026-00106, Ex. Amazon-1050, dated December 23, 2025.

4. Attached as Exhibit 8 is a true and correct copy of the cover pleading from Amazon's Preliminary Invalidity Contentions, dated and served in this case on December 12, 2025.

5. Attached as Exhibit 9 is a true and correct copy of the Decision Granting Institution of *Inter Partes* Review in IPR2024-00010, Paper 7, dated May 24, 2024.

6. Attached as Exhibit 10 is a true and correct copy of the Order Granting Joint Motion to Terminate After Institution of Trial in IPR2024-00010, Paper 27, dated May 13, 2025.

7. Attached as Exhibit 11 is a true and correct copy of the Final Written Decision in IPR2024-00341, Paper 28, dated July 23, 2025.

8. Attached as Exhibit 12 is a true and correct copy of the Final Written Decision in IPR2024-00942 and IPR2024-00943, Paper 20, dated October 1, 2025.

I declare under penalty of perjury that the foregoing is true and correct.

Executed on January 13, 2026, in Marshall, Texas.

/s/ Janice L. Ta
Janice L. Ta

EXHIBIT 6

Perkins Coie

Perkins Coie LLP
1900 Sixteenth Street
Suite 1400
Denver, CO 80202-5255

T. +1.303.291.2300
F. +1.303.291.2400
perkinscoie.com

December 23, 2025

Jessica C. Kaiser
JKaiser@perkinscoie.com
D. +1.303.454.2907
F. +1.303.291.2400

Brian D. Ledahl - bledahl@raklaw.com
Dale Chang - dale.chang@lw.com
James N. Pickens - jpickens@raklaw.com
James S. Tsuei - jtsuei@raklaw.com
Jason M Wietholter - jwietholter@raklaw.com
Kristopher R. Davis - kdavis@raklaw.com
Paul A. Kroeger - pkroeger@raklaw.com
Qi (Peter) Tong - ptong@raklaw.com
Reza Mirzaie - rmirzaie@raklaw.com
Marc A. Fenster - mafenster@raklaw.com
James A. Milkey - jmilkey@raklaw.com
Neil Rubin - nrubin@raklaw.com
Philip X. Wang - pwang@raklaw.com
rak_headwater@raklaw.com

Re: *Headwater Research LLC v. Amazon.com Services LLC,* Case No. 7-25-cv-00286 (W.D. Tex.); *Amazon.com Services LLC v. Headwater Research LLC*, IPR2026-00088

Counsel:

Amazon.com Services LLC, Amazon Web Services, Inc. (collectively, "Petitioners"), and Amazon.com, Inc. hereby stipulate that, if IPR2026-00088 is instituted, Petitioners and Amazon.com, Inc. will be bound by the full scope of estoppel under 35 U.S.C. § 315(e)(2) in *Headwater Research LLC v. Amazon.com Services LLC*, No. 7-25-cv-00286 (W.D. Tex.) as of the institution decision date for the patent at issue in the instituted IPR (i.e., Petitioners and Amazon.com, Inc. will forgo invalidity in district court based on "any ground that the petitioner raised or reasonably could have raised during that inter partes review"). *See also Sotera Wireless, Inc. v. Masimo Corp.*, IPR2020-01019, Paper 12, 18-19 (PTAB Dec. 1, 2020) (precedential as to § II.A).

Accordingly, this stipulation ensures that IPR2026-00088 would be a "true alternative" to the district court proceeding (*Sotera*, Paper 12, 18-19) because Petitioners and Amazon.com, Inc. agree not to pursue any grounds after institution in the district court that are within the scope of the statutory estoppel (i.e., any grounds that the statute would preclude Petitioners and Amazon.com, Inc. from pursuing after Final Written Decision for example if the district court were to stay the IPR pending Final Written Decision). However, if institution of IPR2026-00088 is subsequently vacated or IPR2026-00088 is terminated after institution without reaching a Final Written Decision, Petitioners and Amazon.com, Inc. will no longer be bound by this stipulation.

Sincerely,

Jessica C. Kaiser

EXHIBIT 7

Perkins Coie

Perkins Coie LLP
1900 Sixteenth Street
Suite 1400
Denver, CO 80202-5255

T. +1.303.291.2300
F. +1.303.291.2400
perkinscoie.com

December 23, 2025

Jessica C. Kaiser
JKaiser@perkinscoie.com
D. +1.303.454.2907
F. +1.303.291.2400

Brian D. Ledahl - bledahl@raklaw.com
Dale Chang - dale.chang@lw.com
James N. Pickens - jpickens@raklaw.com
James S. Tsuei - jtsuei@raklaw.com
Jason M Wietholter - jwietholter@raklaw.com
Kristopher R. Davis - kdavis@raklaw.com
Paul A. Kroeger - pkroeger@raklaw.com
Qi (Peter) Tong - ptong@raklaw.com
Reza Mirzaie - rmirzaie@raklaw.com
Marc A. Fenster - mafenster@raklaw.com
James A. Milkey - jmilkey@raklaw.com
Neil Rubin - nrubin@raklaw.com
Philip X. Wang - pwang@raklaw.com
rak_headwater@raklaw.com

Re: *Headwater Research LLC v. Amazon.com Services LLC,* Case No. 7-25-cv-00286 (W.D. Tex.); *Amazon.com Services LLC v. Headwater Research LLC*, IPR2026-00106

Counsel:

Amazon.com Services LLC, Amazon Web Services, Inc. (collectively, "Petitioners"), and Amazon.com, Inc. hereby stipulate that, if IPR2026-00106 is instituted, Petitioners and Amazon.com, Inc. will be bound by the full scope of estoppel under 35 U.S.C. § 315(e)(2) in *Headwater Research LLC v. Amazon.com Services LLC*, No. 7-25-cv-00286 (W.D. Tex.) as of the institution decision date for the patent at issue in the instituted IPR (i.e., Petitioners and Amazon.com, Inc. will forgo invalidity in district court based on "any ground that the petitioner raised or reasonably could have raised during that inter partes review"). *See also Sotera Wireless, Inc. v. Masimo Corp.*, IPR2020-01019, Paper 12, 18-19 (PTAB Dec. 1, 2020) (precedential as to § II.A).

Accordingly, this stipulation ensures that IPR2026-00106 would be a "true alternative" to the district court proceeding (*Sotera*, Paper 12, 18-19) because Petitioners and Amazon.com, Inc. agree not to pursue any grounds after institution in the district court that are within the scope of the statutory estoppel (i.e., any grounds that the statute would preclude Petitioners and Amazon.com, Inc. from pursuing after Final Written Decision for example if the district court were to stay the IPR pending Final Written Decision). However, if institution of IPR2026-00106 is subsequently vacated or IPR2026-00106 is terminated after institution without reaching a Final Written Decision, Petitioners and Amazon.com, Inc. will no longer be bound by this stipulation.

Sincerely,

Jessica C. Kaiser

EXHIBIT 8

UNITED STATES DISTRICT COURT
FOR THE WESTERN DISTRICT OF TEXAS
MIDLAND-ODESSA DIVISION

HEADWATER RESEARCH LLC, Plaintiff, v. AMAZON.COM SERVICES LLC, and AMAZON WEB SERVICES, INC., Defendants.	Case No. 7:25-cv-00286-ADA **JURY TRIAL DEMANDED**

AMAZON'S PRELIMINARY INVALIDITY CONTENTIONS

Pursuant to Judge Albright's March 5, 2025 Standing Order Governing Proceedings (OGP)–Patent Cases, and the Scheduling Order (ECF No. 29), Defendants Amazon.com Services LLC ("ASL") and Amazon Web Services, Inc. ("AWS") (collectively "Amazon" or "Defendants") hereby provide the following disclosure of its Preliminary Invalidity Contentions regarding U.S. Patent Nos. 9,615,192 ("'192 patent") and 10,321,320 ("'320 patent") (collectively, "Asserted Patents"). These contentions are made only as to the Asserted Claims in the Infringement Contentions of Plaintiff Headwater Research LLC. ("Plaintiff" or "Headwater"), which are claims 1-15 of the '192 patent, and claims 1-18 of the '320 patent (collectively, the "Asserted Claims").

Fact discovery, including third-party discovery, is still open in this case. Accordingly, these Preliminary Invalidity Contentions are made without the benefit of full discovery from Headwater or from third parties, including manufacturers and providers of prior art systems and technology. Amazon reserves the right to supplement these Preliminary Invalidity Contentions, *e.g.*, if Headwater is allowed to change its Asserted Claims or infringement contentions, or further discovery or information—*e.g.*, materials received from third parties in response to subpoenas—merits supplementation.

I. RESERVATIONS

A. General Reservation of Rights

Nothing in these contentions (or exhibits) should be construed as an admission regarding infringement, either literally or under the doctrine of equivalents, or as an admission regarding Amazon's understanding of the proper scope of the Asserted Claims. Amazon does not waive the right to contest any claim constructions or to take positions during claim construction proceedings that have yet to occur that may be inconsistent with the invalidity contentions herein

Given the ambiguities in Headwater's Infringement Contentions and its implicit interpretation of the claims, the exemplary citations herein necessarily account for a variety of possible infringement arguments, including Headwater's apparent (and at times erroneous) interpretations of its claims. In certain instances, Amazon has applied the claims to the prior art in view of Headwater's allegations, admissions, or positions for purposes of these contentions only. Amazon's disclosure of Preliminary Invalidity Contentions is not intended to be, and is not, an admission that any Asserted Claim is infringed by any of Amazon's products, that any particular feature or aspect of any of the accused products practices any limitations of the Asserted Claims, or that any of the constructions implicit in Headwater's Infringement Contentions are reasonable, supportable, or proper. Rather, Amazon's application of the claims to the prior art is intended to apply Headwater's apparent interpretation of the claims. In the context of anticipation, "[t]he principle of law is concisely embodied in the truism that: 'That which infringes if later anticipates if earlier.'" *Brown v. 3M*, 265 F.3d 1349, 1352 (Fed. Cir. 2001). Similarly, for obviousness, "obvious variants of prior art references are themselves part of the public domain." *In re Translogic Tech.*, 504 F.3d 1249, 1259 (Fed. Cir. 2007).

Amazon denies infringement of each and every asserted claim. Amazon submits these contentions without waiving any challenges to Headwater's incorrect or improper application of the

Asserted Claims in its Infringement Contentions. Moreover, Amazon's contentions may reflect alternative positions as to claim scope. By providing these contentions, Amazon is not waiving or limiting its right to make arguments about the proper scope of the Asserted Claims. Further, by including prior art that would anticipate or render obvious those claims based on Headwater's apparent claim construction or on any other particular claim construction, Amazon is neither adopting Headwater's claim construction, nor admitting the accuracy of any particular claim construction.

In addition, the identification of prior-art disclosures that anticipate and/or render obvious a particular claim element in these contentions is not an admission that the claim element satisfies the requirements of 35 U.S.C. § 112. Where Amazon asserts that an asserted claim is invalid under 35 U.S.C. § 112 (such as because of a failure to particularly point out and distinctly claim the invention, failure to provide written description support in the specification, and/or failure to enable one of ordinary skill in the art to make and use the claimed invention), Amazon has nonetheless provided prior art disclosures that anticipate or render obvious the Asserted Claims on the assumption that Headwater will contend those claims are definite, supported by an adequate written description, and adequately enabled. In those instances where Amazon asserts that the claims are invalid under 35 U.S.C. § 112 (e.g., no written description, not enabled, and/or indefinite), Amazon has applied the prior art in part in accordance with its assumptions that Headwater: (1) contends those claims are definite, (2) finds written description support for those claims, and (3) contends that those claims are enabled. However, Amazon's prior art Preliminary Invalidity Contentions do not represent any agreement or view as to the meaning, definiteness, written description support for, or enablement of any claim contained therein. In fact, Amazon notes numerous grounds for invalidity on such bases below.

B. Headwater's Infringement Contentions

Headwater's Infringement Contentions are deficient in numerous respects. By way of example, Headwater does not disclose any relevant evidence for multiple limitations to support its allegations that any Accused Product allegedly practices the claims. Furthermore, to the extent that Headwater intends to rely on representative products, Headwater has the burden to identify what product is representative and why.

Additionally, Headwater has presented no substantive contentions of any alleged infringement under the doctrine of equivalents in its infringement contentions. As a result, Headwater has waived any doctrine of equivalents infringement theory. If Headwater is permitted to provide this and other information relating to alleged infringement under the doctrine of equivalents, Amazon may amend and supplement these Preliminary Invalidity Contentions as appropriate, including specifically to demonstrate that any potential expansion under the doctrine of equivalents would ensnare the prior art.

Headwater's deficient contentions have severely prejudiced Amazon's ability to prepare its invalidity contentions. To the extent that Headwater attempts to cure such deficiencies, Amazon specifically reserves the right to object to such attempts to cure, as well as to modify, amend, or supplement its Preliminary Invalidity Contentions.

C. The Intrinsic Record

Amazon further reserves the right to rely on applicable industry standards and prior art cited in the file histories of the Asserted Patents and any related U.S. and foreign patent applications as invalidating references or to show the state of the art. Amazon further reserves the right to rely on the patent applicants' admissions concerning the scope of the prior art relevant to the Asserted Patents found in, *inter alia*: the patent prosecution history for the Asserted Patents and any related patents and/or patent applications or reexaminations (or inter partes review proceedings); any

testimony of the named inventor on the Asserted Patents; and the papers filed and any evidence submitted by Headwater in connection with this or any other litigation.

D. Rebuttal Evidence

Prior art not included in these Preliminary Invalidity Contentions, whether known or not known to Amazon, may become relevant. In particular, Amazon is currently unaware of the extent, if any, to which Headwater will contend that limitations of the Asserted Claims of the Asserted Patents are not disclosed in the prior art identified herein. To the extent that such an issue arises, Amazon reserves the right to identify other references that would disclose or render obvious the allegedly missing limitation(s), or otherwise rebut Headwater's argument.

Discovery is ongoing, and Amazon anticipates that additional prior art may be found through additional investigation or discovery. Thus, Amazon reserves the right to revise, amend, and/or supplement the information provided herein, including identifying, charting, and relying on additional references, should such art be found.

Additionally, as third-party discovery may occur, Amazon reserves the right to present additional items of prior art under 35 U.S.C. §§ 102(a), (b), (e), and/or (g), and/or § 103 located or produced during discovery or further investigation, and to assert contentions of invalidity under 35 U.S.C. §§ 102(c), (d), or (f). For example, Amazon may issue subpoenas to third parties believed to have knowledge, documentation and/or corroborating evidence concerning the validity of the asserted claims. In addition to the prior art identified below and the accompanying invalidity claim charts, Amazon also incorporates by reference any additional invalidity contentions, identified prior art, or invalidity claim charts disclosed at any time by any party to any other litigation or U.S. Patent and Trademark Office proceeding involving the Asserted Patents, and its petitions for IPR related to the Asserted Patents as well as any subsequent filings in said IPRs, subject to any obligations under any stipulations filed therein.

E. Contextual Evidence

Amazon's claim charts cite particular teachings and disclosures of the prior art as applied to the limitations of each of the Asserted Claims. However, persons having ordinary skill in the art generally may view an item of prior art in the context of his or her experience and training, other publications, literature, products, and understandings. As such, the cited portions are only examples, and Amazon reserves the right to rely on uncited portions of the prior art references and on other publications and expert testimony as aids in understanding and interpreting the cited portions, as providing context thereto, and as additional evidence that the prior art discloses a claim limitation or the claimed subject matter as a whole. Amazon further reserves the right to rely on uncited portions of the prior art references, other publications, and testimony, including expert testimony, to establish bases for combinations of certain cited references that render the Asserted Claims obvious. The references discussed in the claim charts may disclose the elements of the Asserted Claims explicitly and/or inherently, and/or they may be relied upon to show the state of the art in the relevant time-frame. The suggested obviousness combinations are provided in the alternative to anticipation contentions and are not to be construed to suggest that any reference included in the combinations is not by itself anticipatory.

F. Incorrect Inventorship

Amazon has not yet taken depositions of the named inventor and reserves the right to assert that the Asserted Claims are invalid under 35 U.S.C. § 102(f) in the event Amazon obtains evidence that the inventor named on the Asserted Patents or related patents, did not himself "invent" the subject matter claimed. Should Amazon obtain such evidence, it will provide the name(s) of the person(s) from whom and the circumstances under which the claimed subject matter or any part of it was derived.

II. PRIORITY / BENEFIT DATE

For purposes of these Preliminary Invalidity Contentions, Amazon has assumed that the Asserted Claims are entitled to a priority date no earlier than January 28, 2009, the filing date of U.S. provisional application No. 61/206,354. To the extent it is determined that the Asserted Claims are entitled only to a date later than January 28, 2009, Amazon reserves the right to revise, amend, and/or supplement the information provided herein, including identifying, charting, and relying on additional references.

III. INVALIDITY CONTENTIONS UNDER 35 U.S.C. §§ 102, 103

As discussed in greater detail below and in the accompanying claim charts, each of the Asserted Claims is invalid because it is anticipated and/or rendered obvious under 35 U.S.C. §§ 102 and 103, because it fails to satisfy the written description or enablement requirements under 35 U.S.C. § 112 ¶ 1, because it is indefinite under 35 U.S.C. § 112 ¶ 2, and/or because it does not claim patent-eligible subject matter under 35 U.S.C. § 101. For example, each of the Asserted Claims is anticipated by and/or obvious in view of one or more items of prior art identified in these contentions, alone and in combination. The prior art identified in these contentions discloses the elements of the Asserted Claims either explicitly or inherently, and Amazon also may rely upon that art to show the state of the art in the relevant timeframe. In addition to the prior art identified in these contentions, Amazon plans to rely on the "Background of the Invention" and other relevant portions of the Asserted Patents and related patents, the prosecution history of the Asserted Patents and related patents (including all cited references), and fact and expert testimony about the prior art to prove that the Asserted Claims are invalid. Amazon also may rely upon other material to show the state of the art in the relevant timeframe.

Amazon bases these contentions on the understanding of a person of ordinary skill in the art at the time of the claimed priority date and on Headwater's apparent view as to the scope of the

Asserted Claims as reflected in its October 17, 2025 Disclosure of Asserted Claims and Infringement Contentions, to the extent that view can be inferred from Headwater's Infringement Contentions, which suffer serious deficiencies, as Amazon has detailed herein.

Amazon not only relies upon the prior art disclosed herein, but also relies on any commercial embodiments and accompanying literature of the various assignees that correspond to the respective disclosures found within the prior art disclosed herein. The assignees' various and respective commercial embodiments and/or corresponding literature anticipate and/or render obvious the Asserted Claims for at least the reasons disclosed in these Preliminary Invalidity Contentions and claim charts, as well as for other independent reasons found within the commercial embodiments and corresponding literature. Amazon also reserves the right to rely on related patents, published applications, foreign patents or publications, and other patent documents as necessary to establish prior art status or clarify the disclosures cited. Amazon further reserves the right to rely on the earliest publication or priority dates to which each of the prior art references are entitled, including dates on which a claim of priority may be based for patent references that are any of a divisional, continuation, or continuation-in-part of an earlier filed patent application.

A. Identification of Prior Art

Amazon identifies below prior art that anticipate under 35 U.S.C. § 102 and/or render obvious under 35 U.S.C. § 103 the Asserted Claims. Each of the references below (and/or the underlying products described therein) qualifies as prior art under one or more sections of 35 U.S.C. §§ 102 and/or 103. The numbers, countries of origin, relevant priority dates, titles, dates of publication, authors, and publishers of these prior art references are based upon the best information that Amazon currently has and upon Amazon's good faith belief.

Amazon incorporates by reference the attached claim charts, all prior art references cited in the attached claim charts, and all prior art references cited on the face of the Asserted Patents and/or

related patents and/or applications. Amazon reserves the right to prove the invalidity of the Asserted Claims on bases other than those required to be disclosed in these contentions. Amazon further intends to rely on admissions of the named inventor, Headwater, and Headwater's expert witnesses concerning the prior art, including statements found in the Asserted Patents, prosecution histories of the Asserted Patents, related patents and/or patent applications, any deposition testimony, and the papers filed and any evidence submitted by Headwater in connection with this litigation. Amazon may rely on testimony from the authors or named inventors listed on the identified prior art references as well as from individuals involved in the planning, development, and marketing and sale of the identified prior art systems. Amazon further may rely on arguments, disclosures and evidence set forth in any petitions for *inter partes* review of the Asserted Patents before the U.S. Patent Trial and Appeals Board, including statements made by Headwater about the meaning and import of the disclosures contained in the Asserted Patents.

Amazon reserves the right to revise its claim charts to rely on any of these references to prove the invalidity of the Asserted Claims in a manner consistent with the Federal Rules of Civil Procedure, the Court's Local Rules, and this Court's Orders. References for which Exhibit Numbers do not appear are additional prior art references that are either included as secondary references in charts contained in the Exhibits, or are otherwise pertinent to the invalidity of the Asserted Claims, either alone or in combination with other references, or to show the state of the art. At this time, Amazon is not providing claim charts for each of these additional references, either because they are cited in conjunction with primary references for which charts have already been provided and are cited therein, and/or because these references have similar disclosures to the prior art references for which invalidity charts have been provided and/or may be used to show the state of the art.

In addition to their invalidating disclosures, the patents and references provided herein may also be relied upon to show the status of the art at the relevant times, including the knowledge of persons of ordinary skill in the art and their motivations. These patents and references may also be used as secondary consideration evidence to demonstrate the obviousness of the claims, including to show contemporaneous development of the subject matter of the Asserted Claims. Amazon may also rely on the background knowledge of the person of ordinary skill in the art.

The identification of prior art below is not exclusive. Amazon may rely upon references cited throughout this document and the attached exhibits, as well as other art that may become known and/or relevant during the course of this or related litigation. Amazon further understands that third parties may have disclosed invalidity contentions and prior art to Headwater, which Headwater has yet to produce in this litigation. Amazon incorporates all such prior art and contentions into these disclosures.

Amazon also incorporates as if fully set forth herein the complete file histories for the Asserted Patent and related patents and foreign counterparts, including any prior art or supporting documents cited therein. Amazon may rely on the patent applicants' admissions concerning the scope of the prior art relevant to the Asserted Patents found in, *inter alia*: the patents' specifications, the patents' prosecution histories and that of their related patents and foreign counterparts; deposition testimony of the named inventor on the Asserted Patents; and the papers filed and any evidence submitted by Headwater in connection with this or any other litigation. Amazon not only relies upon the prior art disclosed herein, but also relies on any commercial embodiments and accompanying literature of the various assignees that correspond to the respective disclosures found within the prior art disclosed herein. The assignees' various and respective commercial embodiments and/or corresponding literature anticipate and/or render obvious the claims of the Asserted Patents for at

least the reasons disclosed in these Preliminary Invalidity Contentions and claim charts, as well as for other independent reasons found within the commercial embodiments and corresponding literature. Amazon also reserves the right to rely on related patents, published applications, foreign patents or publications, and other patent documents as necessary to establish prior art status of the below references or clarify the disclosures cited.

1. Prior Art Patents and Applications

Number	Country	Inventor(s)	Priority Date	102	BATES
5,715,314	U.S.	Payne et al.	2/3/1998 (issued)	102(b)	AMAZON286_PA_00002034-2083
6,219,694	U.S.	Lazaridis et al.	4/17/2001 (issued)	102(b)	AMAZON286_PA_00002084-2099
6,587,450	U.S.	Pasanen	7/1/2003 (issued)	102(b)	AMAZON286_PA_00002100-2117
7,082,615	U.S.	Ellison et al.	7/25/2006 (issued)	102(b)	AMAZON286_PA_00002118-2144
2002/0032853	U.S.	Preston et al.	3/14/2002 (published)	102(b)	AMAZON286_PA_00001482-1507
2002/0046292	U.S.	Tennison et al.	4/18/2002 (published)	102(b)	AMAZON286_PA_00001508-1518
2005/0144294	U.S.	Gellens et al.	6/30/2005 (published)	102(b)	AMAZON286_PA_00001532-1548
2005/0207379	U.S.	Shen et al.	9/22/2005 (published)	102(b)	AMAZON286_PA_00001549-1563
2006/0031237	U.S.	DeAnna et al.	2/9/2006 (published)	102(b)	AMAZON286_PA_00001580-1604
2006/0173959	U.S.	McKelvie et al.	8/3/2006 (published)	102(b)	AMAZON286_PA_00001605-1664
2007/0190977	U.S.	Fok et al.	8/16/2007 (published)	102(b)	AMAZON286_PA_00001698-1723

Number	Country	Inventor(s)	Priority Date	102	BATES
2008/0125120	U.S.	Gallagher et al.	10/18/2002 (provisional), 10/31/2007 (filed), 5/29/2008 (published)	102(a)/ (e)	AMAZON286_ PA_00001751-1814
2008/0162637	U.S.	Adamczyk et al.	11/3/2006 (provisional filed), 10/31/2007 (filed), 7/3/2008 (published)	102(a)/ (e)	AMAZON286_ PA_00001815-1862
2008/0215883	U.S.	Fok et al.	11/29/2007 (filed), 9/4/2008 (published)	102(a)/ (e)	AMAZON286_ PA_00001863-1894
2008/0243999	U.S.	Pazhyannur et al.	3/12/2008 (filed), 10/2/2008 (issued)	102(a)/ (e)	AMAZON286_ PA_00001895-1924
2009/0158397	U.S.	Herzog et al.	12/17/2007 (filed)	102(e)	AMAZON286_ PA_00001945-1962
2009/0240807	U.S.	Munson et al.	3/21/2008 (filed)	102(e)	AMAZON286_ PA_00001963-1974
2009/0282256	U.S.	Rakic et al.	5/12/2008 (filed)	102(e)	AMAZON286_ PA_00001996-2020
WO 2006/077283 A1	WIPO (PCT)	Houghton et al.	7/27/2006 (published)	102(b)	AMAZON286_ PA_00002419-2474

2. Prior Art Publications

Publication Title	Date of Publication	Author / Publisher	102	BATES
3GPP TS 23.140 v6.9.0 (2005-03); 3rd Generation Partnership Project; Technical Specification Group Terminals; Multimedia Messaging Service (MMS); Functional	April 2005	European Telecommunications Standards Institute / 3rd Generation Partnership Project	102(b)	AMAZON286_ PA_00000014-232

Publication Title	Date of Publication	Author / Publisher	102	BATES
Description; Stage 2 ("TS-23.140")				
Wireless Application Protocol Architecture V.3, 2001 ("WAP")	7/3/2001	Wireless Application Protocol Forum, Ltd. / Open Mobile Alliance	102(b)	AMAZON286_PA_00002395-2418

3. Prior Art Systems

System Title	Release Date	Author / Publisher	102	BATES
Blackberry Enterprise System ("BES") v4.1.6 with its Mobile Data System ("MDS") v4.1, which constituted Blackberry's push notification system ("Blackberry Push")	7/18/2008	Blackberry	102(a) 102(b)	AMAZON286_PA_00000287-1023
Open Mobile Alliance's Push Architecture V2.2 ("OMA")	10/2/2007	Open Mobile Alliance	102(a) 102(b)	AMAZON286_PA_00001024-1481

Amazon further incorporates by reference any other charts and contentions related to the issue of validity of the Asserted Patents that Headwater has received (and will receive) from any third party. Amazon incorporates by reference charts, contentions, and any expert opinion, from any other cases that Headwater may file involving the Asserted Patents.

B. System Prior Art

Each prior art system identified in Sections III.A.3 and further described in the identified related charts should be understood to disclose both the system's capabilities generally, and also examples of specific deployments of the system for specific customers. These contentions also demonstrate how these prior art systems are prior art at least because they were made, publicly used, offered for sale, sold, or otherwise made available to the public at least as early as the date disclosed,

and are evidence that the inventions contained in the identified prior art systems were conceived of and reduced to practice, thereby demonstrating prior invention under 35 U.S.C. § 102(g). To the extent these contentions describe various implementations of the same underlying system, that underlying system is a single piece of prior art under 35 U.S.C. § 102.

Amazon also identifies systems (as identified and described in the related publications listed above and in the attached Exhibits) as prior art under 35 U.S.C. §§ 102(a), (b), and/or (g)(2). Although Amazon's investigation continues, information available to date, and provided herein, shows that each system/product/process was (1) known or used by others in this country or described in a printed publication before the priority date of the Asserted Claims; (2) in public use, on sale, and/or described in a printed publication in this country more than one year prior to the date of the application for the Asserted Patents; and/or (3) made in this country by another inventor who had not abandoned, suppressed, or concealed it.

Amazon cites to exemplary evidence providing Headwater notice of the nature of these prior art systems and Amazon's contentions regarding how these systems relate to the Asserted Claims. To avoid duplication and cumulative excerpts, exemplary quotations and citations from certain prior art references are included in the attached claim charts. Similar quotes and citations can be found in other listed prior art references. Further, Amazon reserves the right to rely on additional evidence to further prove the nature of these systems. Because discovery is ongoing, Amazon reserves the right to revise, amend, and/or supplement the information provided herein, including identifying and relying on additional evidence, following any production of documents by Headwater or third parties, or should Amazon's further search and analysis yield additional information or evidence, consistent with the Federal Rules of Civil Procedure.

C. Prior Art Under 35 U.S.C. § 103

The references identified above and in Exhibits B-1 to B-8 and C-1 to C-8 ("Invalidity Charts") teach or suggest each and every element of the Asserted Claims and each independently anticipate the Asserted Claims under 35 U.S.C. §§ 102(a), (b), (e), and/or (g), as set forth in the charts. To the extent that Headwater contends that a prior art reference identified in these Preliminary Invalidity Contentions does not anticipate an Asserted Claim, the reference, alone or in combination with one or more additional references, renders the Asserted Claims obvious in light of the knowledge of person having ordinary skill in the relevant art under 35 U.S.C. § 103. As further indicated in the attached Exhibits B-1 to B-8 and C-1 to C-8, certain prior art references and combinations of prior art references render certain claims obvious under 35 U.S.C. § 103, at least under Headwater's actual and/or apparent application of the claims. To the extent any of the identified prior art references incorporate or refer to other prior art references, the full disclosure of all such references is a single piece of prior art under 35 U.S.C. § 102. Each claim chart provided for a prior art reference should be understood to incorporate by reference all other prior art references incorporated or referred to in the prior art and all claim charts provided for those other references.

1. Reasons to Combine the Various References

The United States Supreme Court clarified the standard for what types of inventions are patentable. *KSR Int'l Co. v. Teleflex Inc*., 127 S. Ct. 1727 (2007). In particular, the Supreme Court emphasized that inventions arising from ordinary innovation, ordinary skill, or common sense should not be patentable. *Id*. at 1732, 1738, 1742-1743, 1746. In that regard, a patent claim may be obvious if the combination of elements was obvious to try or there existed at the time of the invention a known problem for which there was an obvious solution encompassed by the patent's claims. In addition, when a work is available in one field of endeavor, design incentives and other market forces

can prompt variations of it, either in the same field or a different one. If a person of ordinary skill can implement a predictable variation, § 103 likely bars its patentability.

"[T]he combination of familiar elements according to known methods is likely to be obvious when it does no more than yield predictable results." *Id*. at 1731. Because the Asserted Patents simply arrange old elements with each performing the same function it had been known to perform and yields no more than what one would expect from such an arrangement, the combination is obvious. *Id*. at 1742. The Asserted Claims are therefore invalid under 35 U.S.C. § 103 because they do nothing more than combine known techniques and apparatuses according to their known and ordinary uses to yield predictable results.

The Supreme Court further held that, "[w]hen a work is available in one field of endeavor, design incentives and other market forces can prompt variations of it, either in the same field or a different one. If a person of ordinary skill can implement a predictable variation, § 103 likely bars its patentability. For the same reason, if a technique has been used to improve one device, and a person of ordinary skill in the art would recognize that it would improve similar devices in the same way, using the technique is obvious unless its actual application is beyond his or her skill . . . ." *Id*. at 1740. Accordingly, a person of ordinary skill in the art at the time of the alleged invention would have been motivated to combine or adapt known or familiar methods in the art, especially where market forces prompt such variations.

Thus, each of the references describes methods that were known to offer improvements and benefits to the art, and, accordingly, one of skill in the art would have been motivated to combine or modify the references as identified in each of the combinations above.

Moreover, since there were a finite number of predictable solutions, a person of ordinary skill in the art had good reason to pursue the known options. *Id*. The above-identified prior art

references merely use those familiar elements for their primary or well-known purposes in a manner well within the ordinary level of skill in the art. Accordingly, common sense and the knowledge of the prior art render the claims invalid under either § 102 or § 103.

A person of ordinary skill would have been motivated to combine the above prior art based on his knowledge, the nature of the problem to be solved, and the teachings of the prior art. The identified prior art addresses the same or similar technical issues and suggests the same or similar solutions to those issues. Moreover, some of the prior art refer to or discuss other prior art, illustrating the close technical relationship among the prior art. Examples of such combinations are provided in Exhibits B-1 to B-8 and C-1 to C-8.

Moreover, many of the claim elements were already known as admitted by the applicants in the specifications of the Asserted Patents. The combination of such elements may be both predictable and a matter of design choice as known to a person of ordinary skill. When there is a design need or market pressure to solve a problem such as identified previously and/or described in the Asserted Patents, and there are a finite number of identified, predictable solutions, a person of ordinary skill would be motivated to combine the known options that are within his or her technical grasp. Here, one of ordinary skill in the art would have been motivated to combine known prior art solutions represented in the primary references. These motivations apply throughout each of the combinations below and in the claim charts.

One of skill in the art would have been motivated to combine the different publications and patents that were authored by employees of the company or assigned to the same assignee and related to the same subject matter.

One of skill in the art would have been motivated to combine different references that were authored, developed, or invented by the same individual(s) related to the same subject matter. The

common inventor/author/architect references themselves demonstrate that they relate to continued work in a common field of effort and continued related developments in that field. One of skill in the art would, therefore, combine the references related to each individual.

Based on the teachings of the references and/or the knowledge of one of ordinary skill, one of skill in the art would have been motivated to combine different references from the same company.

Also, one of ordinary skill in the art would have been motivated to review the identified references for the Asserted Patents, which generally relate to communication between network servers and end-user devices and combine the various disclosures and teachings of the references that are compatible and complementary so as to create a system that has more features than present in the primary reference alone, or that operates in a more efficient or streamlined manner than that suggested by the primary reference.

Likewise, where a primary reference discusses a particular feature in general terms, one of ordinary skill in the art would have been motivated to combine such a general disclosure with details for that particular feature from other references. In essence, a general teaching which presumes that one of ordinary skill in the art is familiar with various ways to implement the general teaching would motivate a person of ordinary skill in the art to apply general knowledge in the art to the general teaching or to locate specific detailed teachings from other references.

In Exhibits B-1 to B-8 and C-1 to C-8, exemplary combinations are listed for purposes of explaining and exemplifying which references would be combined under the motivation cited in that particular chart. These combinations are not intended to be limiting but rather intended to provide notice of the reasoning behind particular motivations to combine and the references that would be combined thereunder. In many instances, multiple different motivations would apply to a particular

combination (for example, if multiple references were both authored by the same person and referred to the same product/system, then both of those motivations would apply).

Should any prior art cited above be deemed not to disclose, explicitly or inherently, any limitation of a claim, Amazon reserves the right to argue that any such difference between that prior art and the corresponding claim would have been obvious to one of ordinary skill in the art. To the extent that such an argument is deemed a "combination" analysis for purposes of obviousness, Amazon discloses its present intention to rely on the separate combination of the knowledge of a person of ordinary skill in the art with each item of prior art identified above. The knowledge of a person of ordinary skill in the art is demonstrated by the full list of references above and the prior art produced.

For example, for each of the various "systems" or "products" that were charted, to the extent that the collective references cited in each Exhibit are not considered to be the same reference for purposes of invalidity under 35 U.S.C. § 102, it would have been obvious to combine the references cited in each such Exhibit. One of skill in the art would have been motivated to look at all of the available documentation for a particular product/system to understand the operation. One of skill in the art would have combined that knowledge from the various related references because it would be clear that the references were related. For at least this reason, one of skill in the art could consider it obvious to combine the references that collectively teach a product or system. The references were identified in the charts for each such system/product, and Amazon intends to rely upon the combination of references in each of the system/product charts.

2. Exemplary Motivations to Combine

As demonstrated in Exhibits B-1 to B-8 and C-1 to C-8, the Asserted Claims are invalid under 35 U.S.C. § 103(a) as obvious in view of the references identified in Sections III.A.1-3, whether alone or in combination with each other. Moreover, design incentives and market forces,

such the advantages of creating a more desirable product and the effects of demands known to the design community or present in the marketplace, would have prompted such modifications or combinations. Additionally, one would be motivated to address at least the alleged problems or to achieve the purported objectives identified in the Background of the Asserted Patents.

Amazon identifies in Exhibits B1-B8 and C1-C8, listed below with reference to the primary reference (more fully defined above in Section III.A) and Asserted Patent at issue, exemplary combinations of references for the Asserted Patents. To the extent any particular element or dependent claim is not expressly or inherently disclosed by each primary reference, it would have been obvious in view of the disclosures in that reference in combination with the knowledge of a person of ordinary skill in the art, or in combination with one of the other primary references, as discussed in their respective charts, or one or more of the secondary references discussed therein including Shen, Adamczyk, Ellison, Pazhyannur, Fok ’883, Rakic, Munson, and Gellens. These primary and secondary references are analogous art. They relate to similar fields and address similar problems and similar solutions. A person of ordinary skill in the art would have found it obvious to look to them together and could have combined their teachings using routine engineering leading to predictable results.

Ex.	§103 Charts with Combinations
B-1	TS-23.140 ('320 patent)
B-2	Houghton ('320 patent)
B-3	Lazaridis ('320 patent)
B-4	Herzog ('320 patent)
B-5	Fok '977 ('320 patent)
B-6	WAP ('320 patent)
B-7	Blackberry Push ('320 patent)
B-8	OMA ('320 patent)
C-1	TS-23.140 ('192 patent)
C-2	Houghton ('192 patent)
C-3	Lazaridis ('192 patent)
C-4	Herzog ('192 patent)
C-5	Fok '977 ('192 patent)
C-6	WAP ('192 patent)
C-7	Blackberry Push ('192 patent)
C-8	OMA ('192 patent)

The attached invalidity claim charts identify examples of where prior art references disclose, either expressly or inherently, each element of the Asserted Claims. Amazon explains below in Sections IV that certain of the Asserted Claims are indefinite under 35 U.S.C. § 112. If this Court declines to find these Asserted Claims to be indefinite, however, the attached claim charts demonstrate how these claims are invalid in light of the prior art references. To the extent any identified prior art reference is deemed not to teach or suggest one or more elements of an Asserted Claim, the claimed feature would nonetheless have been inherently present in the prior art reference and/or obvious to one having ordinary skill in the art at the time of the alleged invention—either alone or in combination with other prior art references.

By way of example, and not limitation, Defendants disclose the following combinations, as discussed in more detail in the attached charts, which include additional combinations:

- TS-23.140 in view of Houghton, Munson, Shen, Lazaridis, Adamczyk, Herzog, Ellison, Pazhyannur, Fok '883, Rakic, and/or Gellens.
    - TS-23.140 and Houghton disclose similar technologies addressing similar problems in the same field. They are both from the same field in that they both discuss push messaging systems. TS-23.140, 28-32; Houghton, 20-21. This combination would involve only routine engineering leading to predictable results.
    - TS-23.140 and Munson disclose similar technologies addressing similar problems in the same field. They are both from the same field in that they both discuss push messaging systems. Specifically, TS-23.140 disclosed the MMS User Agent retrieving MMs that were stored in the MMBox. TS-23.140, 29-30. Munson similarly teaches messages can be delivered from memory "according to a schedule of time or event" such as coordinating pushes "for a system maintenance purpose during off-peak hours." Munson, [0040], [0044]. This combination would involve only routine engineering leading to predictable results.
    - TS-23.140 and Shen disclose similar technologies addressing similar problems in the same field. They describe similar messaging environments and communications between push servers and push clients, such that a POSITA would have found straightforward to modify TS-23.140's push

server to implement, for example, Shen's security modules. This combination would involve only routine engineering leading to predictable results.

- Lazaridis and TS-23.140 disclose similar technologies addressing similar problems in the same field. They are both from the same field in that they both disclose push messaging systems. Lazaridis, Abstract, 3:9-35; TS-23.140, 28-32. This combination would involve only routine engineering leading to predictable results.
- TS-23.140 and Adamczyk disclose similar technologies addressing similar problems in the same field. TS-23.140 discloses retaining the MM "until the earliest desired time of delivery" and "periodic polling." TS-23.140, 27, 90. Adamczyk discloses a message-transmission system like the one described in TS-23.140, including notification servers that are similar to TS-23.140's Relay/Server. Adamczyk, [0007]-[0009]. This combination would involve only routine engineering leading to predictable results.
- TS-23.140 and Herzog disclose similar technologies addressing similar problems in the same field. TS-23.140 describes a periodic timer through periodic polling. TS-23.140, 27, 90. Herzog is one example of prior art that taught mechanisms to control the duration of a connection between a client (like TS-23.140's MMS User Agent) and server (like TS-23.140's MMS Relay/Server) through keep-alive timers to periodically ping a server to keep the connection alive, or to terminate the connection when the keep-alive messages are not sent for a given period of time. Herzog, [0036], [0041]-

[0043]. This combination would involve only routine engineering leading to predictable results.

- TS-23.140 and Ellison disclose similar technologies addressing similar problems in the same field. TS-23.140 discloses both an MMS User Agent and applications executing on a UE/mobile device. TS-23.140, 17-18, 23. TS-23.140 already discloses supplying message through components implementing secure push server protocols such as TCP and IP for delivery over a connection between the Relay/Server and a UE's User Agent. TS-23.140, Fig. 4. Ellison uses secure environments to inhibit attacks from malicious software. Ellison, Abstract, 1:16-51. POSITAs would have been motivated to modify TS-23.140 based on Ellison's teachings of hierarchical, nub-based normal and isolated execution environments to provide enhanced security for User Agent. TS-23.140, 41-42; Ellison, 4:63-5:10, 8:25-32, 8:66-9:6, 9:28-62, Figs. 1A, 2. This combination would involve only routine engineering leading to predictable results.
- TS-23.140 and Pazhyannur disclose similar technologies addressing similar problems in the same field. They both disclose managing applications running on one or more UE/user terminals using TCP/IP protocols. TS-23.140, 17, 54-55, Figs. 2-3; Pazhyannur, [0027]-[0029], [0038], [0040]. This combination would involve only routine engineering leading to predictable results.
- TS-23.140 and Fok '883 disclose similar technologies addressing similar problems in the same field. They are from the same field in that they disclose buffering and transmitting data using secured TCP/IP protocols. TS-23.140,

17, 28-29, Figs. 2-3; Fok, [0009], [0037], [0056], [0071], Figs. 2-3. Fok describes "secure inter-application communication" in a "mobile operating environment." Fok, [0036]-[0037], [0081], [0106]-[0108], Figs. 4, 8-9. This combination would involve only routine engineering leading to predictable results.

- TS-23.140 and Rakic disclose similar technologies addressing similar problems in the same field. They both contemplate push messaging with a similar push architecture involving a push server (e.g., push server and secure push message server) that communicates with a push client/user device. Rakic recognized the risk of unverified transmissions and proposed the use of electronic signatures to verify the parties to the transmission. Rakic, [0047]-[0049], [0066]-[0067]. This combination would involve only routine engineering leading to predictable results.
- TS-23.140 and Gellens disclose similar technologies addressing similar problems in the same field. They both disclose taking action based on one or more triggering events. TS-23.140, 28-29; Gellens, Abstract, [0024], [0035]-[0036]. This combination would involve only routine engineering leading to predictable results.

- Houghton in view of Munson, Shen, Lazaridis, Ellison, Rakic, Adamczyk, Gellens, Herzog, Pazhyannur, and/or Fok '883.
  - Houghton and Munson disclose similar technologies addressing similar problems in the same field. They are both from the same field in that they both discuss push messaging system, as discussed above with respect to

combinations with TS-23.140. This combination would involve only routine engineering leading to predictable results.

- Houghton and Shen disclose similar technologies addressing similar problems in the same field. They describe similar messaging environments and communications between push servers and push clients, such that a POSITA would have found straightforward to modify Houghton's push server to implement Shen's security modules. This combination would involve only routine engineering leading to predictable results.
- Houghton and Lazaridis disclose similar technologies addressing similar problems in the same field. They both disclose systems that push content to a mobile device following an event trigger. Lazaridis, Abstract, 3:9-35; Houghton, 14, 21. This combination would involve only routine engineering leading to predictable results.
- Houghton and Ellison disclose similar technologies addressing similar problems in the same field, as discussed above with respect to TS-23.140 combinations. This combination would involve only routine engineering leading to predictable results.
- Houghton and Rakic disclose similar technologies addressing similar problems in the same field. They both contemplate push messaging with a similar push architecture involving a push server (e.g., push server and secure push message server) that communicates with a push client/user device. Rakic recognized the risk of unverified transmissions and proposed the use of electronic signatures to verify the parties to the transmission. Rakic, [0047]-

[0049], [0066]-[0067]. This combination would involve only routine engineering leading to predictable results.

- Houghton and Adamczyk disclose similar technologies addressing similar problems in the same field. Adamczyk discloses a message-transmission system like the one described in Houghton, including notification servers that are similar to Houghton's push servers. Adamczyk, [0007]-[0009]. This combination would involve only routine engineering leading to predictable results.
- Houghton and Gellens disclose similar technologies addressing similar problems in the same field. They both disclose taking action based on one or more triggering events. Houghton, 14, 21; Gellens, Abstract, [0024], [0035]-[0036]. This combination would involve only routine engineering leading to predictable results.
- Houghton and Fok '883 disclose similar technologies addressing similar problems in the same field. They are from the same field in that they disclose transmitting data using secured TCP/IP protocols. Houghton, 14, 19-21; Fok, [0009], [0037], [0056], [0071], Figs. 2-3. This combination would involve only routine engineering leading to predictable results.
- Houghton and Herzog disclose similar technologies addressing similar problems in the same field. Houghton teaches sending periodic messages so that the connection does not time expire. Houghton, 26-27. Herzog is one example of prior art that taught mechanisms to control the duration of a connection between a client (like Houghton's push client) and server (like

Houghton's push server) through keep-alive timers to periodically ping a server to keep the connection alive, or to terminate the connection when the keep-alive messages are not sent for a given period of time. Herzog, [0036], [0041]-[0043]. This combination would involve only routine engineering leading to predictable results.

- Houghton and Pazhyannur disclose similar technologies addressing similar problems in the same field. They both disclose managing applications running on one or more UE/user terminals using TCP/IP protocols. Houghton, 11-12; Pazhyannur, [0027]-[0029], [0038], [0040]. This combination would involve only routine engineering leading to predictable results.

- Lazaridis in view of TS-23.140, Houghton, Shen, Ellison, Rakic, Adamczyk, Gellens, Herzog, Pazhyannur, and/or Fok '883
  - Lazaridis and TS-23.140 disclose similar technologies addressing similar problems in the same field and a combination would involve only routine engineering leading to predictable results, as discussed above with respect to TS-23.140.
  - Lazaridis and Houghton disclose similar technologies addressing similar problems in the same field and a combination would involve only routine engineering leading to predictable results, as discussed above with respect to Houghton.
  - Lazaridis and Shen disclose similar technologies addressing similar problems in the same field. They describe similar messaging environments and communications between push servers and mobile devices, such that a

POSITA would have found straightforward to modify Lazaridis' server to implement Shen's security modules. This combination would involve only routine engineering leading to predictable results.

- Lazaridis and Ellison disclose similar technologies addressing similar problems in the same field. Lazaridis discloses implementing a "secure connection through the internet." Lazaridis, 3:22-28. Also, Lazaridis discloses a "need for such a system and method that provides for secure, transport delivery of the user-selected data items from the host system to the mobile device." 2:42-45. Ellison uses secure environments to inhibit attacks from malicious software. Ellison, Abstract. This combination would involve only routine engineering leading to predictable results.
- Lazaridis and Rakic disclose similar technologies addressing similar problems in the same field. Lazaridis and Rakic both contemplate push messaging with a similar push architecture involving a push server (e.g., network server and secure push message server) that communicates with a mobile device, as discussed above. This combination would involve only routine engineering leading to predictable results.
- Lazaridis and Adamczyk disclose similar technologies addressing similar problems in the same field. Adamczyk discloses a message-transmission system like the one described in Lazaridis, including notification servers that are similar to Lazaridis' network server. Adamczyk, [0007]-[0009]. This combination would involve only routine engineering leading to predictable results.

- Lazaridis and Gellens disclose similar technologies addressing similar problems in the same field. They both disclose taking action based on one or more triggering events. Lazaridis, 6:56-7:7; Gellens, Abstract, [0024], [0035]-[0036]. This combination would involve only routine engineering leading to predictable results.
- Lazaridis and Herzog disclose similar technologies addressing similar problems in the same field. Lazaridis discloses pushing data to a mobile device after it was stored in memory and repackaged. Lazaridis, Abstract, 1:26-38, 3:7-8. Like Lazaridis, Herzog discloses that messages can be "saved in a message buffer…until [the message] can be delivered to the client." Herzog, [0031]. This combination would involve only routine engineering leading to predictable results.
- Lazaridis and Pazhyannur disclose similar technologies addressing similar problems in the same field. Pazhyannur recognizes that users may register multiple devices associated with the user, and the system maintains a centralized user profile that lists all registered devices and applications to permit access to the applications on any of the user's registered devices. Pazhyannur, [0040]. This combination would involve only routine engineering leading to predictable results.
- Lazaridis and Fok '883 disclose similar technologies addressing similar problems in the same field. They both disclose transmitting data using secured TCP/IP protocols. Lazaridis, 11:16-28; Fok, [0009], [0037], [0056], [0071],

Figs. 2-3. This combination would involve only routine engineering leading to predictable results.

- Herzog in view of Adamczyk, Houghton, Shen, Pazhyannur, Fok ’883, Lazaridis, Ellison, TS-23.140, Munson, Rakic, and/or Gellens
    - Both Adamczyk and Herzog are both directed to the field of secure, scalable, and flexible messaging and notification services in advanced communication networks. For example, Adamczyk is directed with next-generation network architectures that support messaging, notification, and application services over IP-based and wireless networks. Adamczyk focuses on notification services and middleware for NGN/IMS environments. See, e.g., Adamczyk, ¶¶2-78, 371-437. Similarly, Herzog teaches secure message delivery via gateways and client authorization in mobile messaging systems. Herzog, ¶¶18, 34-47. This combination would involve only routine engineering leading to predictable results.
    - Herzog and Houghton disclose similar technologies addressing similar problems in the same field and a combination would involve only routine engineering leading to predictable results, as discussed above with respect to Houghton.
    - Herzog and Shen address similar fields, for example addressing the architecture and operation of gateways for storing, forwarding, and delivering multimedia messages (such as MMS) between user devices and backend systems, with a focus on supporting enterprise applications, enhancing security, and enabling communication over multiple network types (e.g.,

wireless LAN and telecom networks). See, Shen, ¶¶2, 5, 16, 30; see also, Herzog, ¶¶18, 20, 31-32. This combination would involve only routine engineering leading to predictable results.

- A POSITA would recognize the disclosures of Pazhyannur and Herzog as analogous art because both disclose management of application state, session continuity, and message delivery across networked devices in communication systems. Both disclosures address the challenges of supporting seamless user experiences when applications or sessions are transferred, suspended, or resumed across heterogeneous devices, including mobile and wireless terminals. See, e.g., Herzog, ¶18; Pazhyannur, ¶¶2, 25, 42. This combination would involve only routine engineering leading to predictable results.
- Herzog and Fok '883 are from the same field in that they disclose buffering and transmitting data using secured TCP/IP protocols. Fok, ¶¶9, 37, 56, 71, Figs. 2-3. Fok describes "secure inter-application communication" in a "mobile operating environment." Id., ¶¶36-37, 81, 106-108, Figs. 4, 8-9. Fok uses a "handshake" between a "primary" and one or more "recipient" applications to establish recipients are trusted using "a list of unique identifiers" before transmitting information between the two. Id., ¶¶47-53, 96-102, 106-108, Figs. 7-10. This combination would involve only routine engineering leading to predictable results.
- Lazaridis and Herzog disclose similar technologies addressing similar problems in the same field and a combination would involve only routine

engineering leading to predictable results, as discussed above with respect to Lazaridis.

- Ellison addresses the need for robust processor security in the context of modern computing, especially for applications such as e-commerce and business-to-business (B2B) transactions, which are increasingly conducted over networked systems. Ellison, Background. Since Ellison's architecture is intended to be broadly compatible and to protect platforms engaged in e-commerce and B2B transactions, a POSITA would find it obvious to secure communications over all relevant channels—including wireless networks. No inventive skill would be required for a POSITA integrating Herzog's push architecture with Ellison's isolated execution architecture in order to extend the security benefits of Ellison's invention to mobile and wireless environments. This combination would involve only routine engineering leading to predictable results.
- TS-23.140 and Herzog disclose similar technologies addressing similar problems in the same field and a combination would involve only routine engineering leading to predictable results, as discussed above with respect to TS-23.140
- A POSITA would have been motivated to combine Munson with Herzog because a POSITA would have desired to support diverse client devices and network environments, as well as to leverage an existing, proven technology for wireless content delivery, e.g., Herzog. Munson similarly teaches messages can be delivered from memory "according to a schedule of time or

event" such as coordinating pushes "for a system maintenance purpose during off-peak hours." Munson, ¶¶40, 44. This combination would involve only routine engineering leading to predictable results.

- Herzog and Rakic disclose similar technologies addressing similar problems in the same field. Herzog provides a push architecture for secure message delivery between client devices and servers via a gateway, including client registration, bi-directional push channels, and client-controlled authorization lists. Herzog, ¶¶34-36, 44-47. Rakic's disclosure focuses on the cryptographic security of push messages, including the generation and validation of electronic signatures, use of administrator codes, device identifiers, and subscriber information to authenticate and authorize message delivery. Rakic, ¶¶2-42. This combination would involve only routine engineering leading to predictable results.
- Herzog discloses a secure message delivery system for wireless end-user devices, with message delivery triggers based on events such as registration, keep-alive, or client activity. Herzog, ¶¶34-36, 41-42. Similarly, Gellens is directed to methods and systems for opportunistically transferring data between devices (e.g., mobile phones, PDAs, or computers) based on a set of criteria that include triggering events (e.g., channel availability, connection quality, time of day) and other conditions for efficient or low-priority data transfer. Gellens, ¶¶2-4, 16, 24-29. A POSITA would recognize both Herzog and Gellens both disclose delivering content based on one or more triggering

events. Id., Abstract, ¶¶24, 35-36. This combination would involve only routine engineering leading to predictable results.

- Fok ’977 in view of TS-23.140, Shen, Ellison, and/or Adamczyk
    - As discussed in connection with Fok ’883 and TS-23.140, Fok ’977 and TS-23.140 are both from the same field in that they both disclose messaging systems. Fok ’977, [0009],[0068],[0071],[0077]; TS-23.140, 28-32. A POSITA would have been motivated to incorporate an application-registration process like TS-23.140’s into Fok ’977’s system to ensure each application is configured to transmit messages compatible with the network and ensure successful message deliveries. TS-23.140, 54. This combination would involve only routine engineering leading to predictable results.
    - Fok ’977 and Shen describe similar messaging environments and communications between servers and clients, such that a POSITA would have been motivated to and would have found it straightforward to modify Fok ’977’s push server to implement Shen’s security modules. This combination would involve only routine engineering leading to predictable results.
    - Fok ’977 and Ellison disclose similar technologies addressing similar problems in the same field. Fok ’977 already discloses having varying levels of access to different devices and processes. Fok ’977 [0061]. Ellison takes this a step further by using a certain amount of resources to create secure environments for some applications to execute within to inhibit attacks from malicious software. Ellison, Abstract. This combination would involve only routine engineering leading to predictable results.

- Fok ’977 and Adamczyk disclose similar technologies addressing similar problems in the same field. Adamczyk discloses a message-transmission system like the one described in Fok ’977, including notification servers that are similar to Fok ’977’s servers. Adamczyk, [0007]-[0009]. This combination would involve only routine engineering leading to predictable results.

- Blackberry Push in view of Lazaridis
  - Lazaridis and Blackberry Push are analogous art to each other; they are in the same field of endeavor (e.g., computer systems and/or networks) and are reasonably pertinent to the problems faced by the inventor (e.g., secure computer messaging across a network). Both Lazaridis and Blackberry Push disclose the transmission of multimedia messages over wireless networks and seek to improve interoperability and security for mobile communications. For example, both Blackberry Push and Lazaridis attempt to solve the problem of reducing the need for manual user intervention, allowing applications to respond automatically to network events or server commands. Lazaridis, Abstract; MDS Studio 4.1, p. 15. This combination would involve only routine engineering leading to predictable results.

- OMA in view of Lazaridis
  - Lazaridis and OMA are analogous art to each other; they are in the same field of endeavor (e.g., computer systems and/or networks) and/or reasonably pertinent to the problems faced by the inventor (e.g., secure computer messaging across a network). Both Lazaridis and OMA disclose the

transmission of multimedia messages over wireless networks and seek to improve interoperability and security for mobile communications. For example, both OMA and Lazaridis attempt to solve the problem of reducing the need for manual user intervention, allowing applications to respond automatically to network events or server commands. Lazaridis, Abstract; OMA Architecture, Sect. 4, p. 9. Lazaridis discloses a server that pushes messages to a client on a mobile terminal in a wireless network. Lazaridis, 5:20-23. This combination would involve only routine engineering leading to predictable results.

Citations within each attached claim chart are exemplary, not exhaustive, and should not be construed as the sole evidentiary support in the prior art reference. The prior art references may contain additional support upon which Amazon may rely. For any given quotation or excerpt, for example, Amazon reserves the right to introduce other text and images (including but not limited to surrounding, related, or explanatory text, images, or uncited portions of the prior art references) from the same or other documents that may help to provide context to the quotation or excerpt.

Furthermore, where Amazon cites to a particular figure in a prior art reference, the citation should be understood to encompass the caption and description of the figure and any text relating to the figure. Similarly, where Amazon cites to particular text referring to a figure, the citation should be understood to include the corresponding figure as well. Amazon may also rely on other documents and information, including identified prior art references, prosecution histories for the Asserted Patents (and related patents and/or patent applications), prior art cited during prosecution of the Asserted Patents, and witness testimony—including expert and fact testimony—to explain, amplify,

illustrate, demonstrate, provide context to, or aid in understanding the cited portions of the prior art references.

D. Invalidity Under 35 U.S.C. § 102(f)

A patent is invalid if the alleged inventor "did not himself invent the subject matter sought to be patented." 35 U.S.C. § 102(f). A patent is invalid under 102(f) if the invention was previously conceived of by another and that conception was communicated to the named inventor. *See, e.g.*, *Gambro Lundia AB v. Baxter Healthcare Corp.*, 110 F.3d 1573, 1576 (Fed. Cir. 1997); *see also Price v. Symsek*, 988 F.2d 1187, 1190 (Fed. Cir. 1993). Amazon's investigation into derivation by the named inventor of the Asserted Patents continues. Amazon reserves the right to amend these contentions as it becomes aware of additional evidence, including, for example after the deposition of the named inventor and other witnesses from Headwater and third parties. Moreover, by asserting the invalidity of the Asserted Patent, Amazon in no way waives or limits any non-infringement arguments it may make in this case.

IV. INVALIDITY UNDER 35 U.S.C. § 112

Section 112 requires that a patent specification "contain a written description of the invention . . . ." 35 U.S.C. § 112 ¶ 1. To fulfill that written description requirement, "the patent specification must describe an invention in sufficient detail that one skilled in the art can clearly conclude that the inventor invented what is claimed." *Kao Corp. v. Unilever US, Inc.*, 441 F.3d 963, 967–68 (Fed. Cir. 2006); *see also LizardTech, Inc. v. Earth Resource Mapping, Inc.*, 424 F.3d 1336, 1345 (Fed. Cir. 2005) ("[E]nough [of the invention] must be included to convince a person of skill in the art that the inventor possessed the invention . . . ."). Amazon contends that, at least under Headwater's actual and/or apparent application of the claims, the Asserted Patents do not include a sufficient written description supporting the Asserted Claims. Section 112 likewise requires that the specification "enable any person skilled in the art to which it pertains, or with which it is most nearly connected,

to make and use the" claimed invention. 35 U.S.C. § 112 ¶ 1. A claim is not enabled if, "at the effective filing date of the patent, one of ordinary skill in the art could not practice their full scope without undue experimentation." *Wyeth and Cordis Corp. v. Abbott Labs.*, 720 F.3d 1380, 1384 (Fed. Cir. 2013). "This important doctrine prevents both inadequate disclosure of an invention and overbroad claiming that might otherwise attempt to cover more than was actually invented." *MagSil Corp. v. Hitachi Global Storage Techs., Inc.*, 687 F.3d 1377, 1381 (Fed. Cir. 2012). Amazon contends that, at least under Headwater's actual and/or apparent application of the claims, the Asserted Claims do not enable any person skilled in the relevant art to make and use the claimed invention without undue experimentation.

Based on Amazon's present understanding of the Asserted Claims and Headwater's apparent interpretation of these claims as reflected in its Infringement Contentions, the following limitations of the Asserted Claims fail to satisfy the requirements of 35 U.S.C. § 112, ¶ 1 because the specification and original patent application fail to provide an enabling disclosure of and written description support for at least the following limitations:

- "message buffer system" ('192 patent, claim 1; '320 patent, claims 1, 2)
- "device link agent" ('192 patent, claims 1-5, 11, 12, 15; '320 patent, claims 1, 5, 6, 9, 12-17)
- "for at least some of the received network element messages, the receipt of such a message by the message buffer system is not a message delivery trigger" ('192 patent, claim 1; '320 patent, claim 1)
- "for at least some of the received network element messages, the receipt of such a message is not a message delivery trigger" ('192 patent, claim 15)

- "for at least one of the message delivery triggers, the trigger is an occurrence of an asynchronous event with time-critical messaging needs" ('192 patent, claims 1, 15; '320 patent, claim 1)
- "supply one or more messages comprising the buffered content to the transport services stack for delivery on the secure message link maintained between the transport services stack and a device link agent on the given one of the wireless end-user devices" ('192 patent, claim 1)
- "supplying one or more messages comprising the buffered content for delivery on the secure message link maintained between the message link server and a device link agent on the given one of the wireless end-user devices" ('192 patent, claim 15)
- "supply one or more messages comprising the buffered content for the given one of the wireless end-user devices to the transport services stack for delivery on the secure message link maintained between the transport services stack and a device link agent on the given one of the wireless end-user devices" ('320 patent, claim 1)
- "periodic timer" ('192 patent, claim 9; '320 patent, claim 3)
- "wherein the period of the timer is fractionally shorter than a maximum data message interval" ('192 patent, claim 10; '320 patent, claim 4)
- "interprocess communication service" ('320 patent, claim 17)
- "the respective device link agent on each wireless end-user device receiving access authorization information from the secure server, the access authorization indicating, respectively for each wireless end-user device, the software components authorized to receive messages via the device link agent on that device" ('320 patent, claim 9)

- "a secure server to provide secure authorization signatures to the given one of the wireless end-user devices, the secure authorization signatures indicating the authorized software components that are allowed to receive data from secure message link messages via the message link server" ('192, claim 8)

Section 112 also requires that the specification "conclude with one or more claims particularly pointing out and distinctly claiming the subject matter which the applicant regards as his invention." 35 U.S.C. § 112 ¶ 2. As the Supreme Court clarified, this provision requires that the "claims, viewed in light of the specification and the prosecution history, inform those skilled in the art about the scope of the invention with reasonable certainty." *Nautilus, Inc. v. Biosig Instruments, Inc.,* 134 S. Ct. 2120, 2129 (2014). Amazon contends that, at least under Headwater's actual and/or apparent application of the claims, the Asserted Claims fail to distinctly claim what the inventor claims as his invention.

Based on Amazon's present understanding of the Asserted Claims and Headwater's apparent interpretation of these claims as reflected in its Infringement Contentions, the following limitations of the Asserted Claims fail to satisfy the requirements of 35 U.S.C. § 112, ¶ 2 because the outer bounds of at least the terms listed below cannot be determined with reasonable certainty by a POSITA when reading the claims in light of the specification and prosecution history.

- "wherein the period of the timer is fractionally shorter than a maximum data message interval" ('192 patent, claim 10; '320 patent, claim 4)

V. INVALIDITY UNDER 35 U.S.C. § 101

Amazon contends that Asserted Claims are invalid under 35 U.S.C. § 101 for failing to claim patentable subject matter. In addition to the descriptions below, Exhibits A-1 and A-2 contain detailed explanations to support patent ineligibility. *See* Standing Order Governing

Proceedings (OGP Version 4.4) – Patent Cases (W.D. Tex. Jan. 23, 2024) (Albright, J.). Amazon reserves the right to supplement or amend its patent-eligibility theories as discovery proceeds.

Section 101 of the Patent Act "contains an important implicit exception: Laws of nature, natural phenomena, and abstract ideas are not patentable." *Alice Corp. v. CLS Bank Int'l*, 573 U.S. 208, 217 (2014). "Patent eligibility under § 101 is an issue of law that sometimes contains underlying issues of fact." *Elec. Commc'n Techs., LLC v. ShoppersChoice.com, LLC*, 958 F.3d 1178, 1181 (Fed. Cir. 2020) (citing *Berkheimer v. HP Inc.*, 881 F.3d 1360, 1365 (Fed. Cir. 2018)). "The Supreme Court has laid out a two-step framework for evaluating patent eligibility." *Id.* (citing *Alice*, 573 U.S. at 217; *Mayo Collaborative Servs. v. Prometheus Labs, Inc.*, 566 U.S. 66, 70-73 (2012)); *Intell. Ventures I LLC v. Capital One Fin. Corp.*, 850 F.3d 1332, 1338 (Fed. Cir. 2017). Step one "determine[s] whether a patent claim is directed to an unpatentable law of nature, natural phenomen[on], or abstract idea." *ECT*, 958 F.3d at 1181 (citing *Alice*, 573 U.S. at 217). "If so," the Court "then determine[s] whether the claim nonetheless includes an 'inventive concept' sufficient to 'transform the nature of the claim into a patent-eligible application.'" *Id.* (quoting *Alice*, 573 U.S. at 217).

A. Ineligibility of the '320 patent

1. Alice *step one*. Independent claim 1, which is representative (*see infra*),[1] recites a "network system" comprising "a network server system" (including a "link interface," a "network interface," and a "message buffer system") and "device link agents" on "wireless end-user devices." The "message buffer system" includes "memory" and "logic" to "buffer content," "determine when one of a plurality of message delivery triggers … has occurred," and "upon determining that one of the message delivery triggers has occurred, … supply … [the buffered]

[1] Amazon reserves the right to respond if Headwater argues that claim 1 is not representative.

messages" to wireless end-user devices. The system uses a generic "transport services stack" and "Internet data message link." The "device link agents" maintain the "message link" over a network, "receive … messages," and "for software components that are authorized to access messages … cause messages … to be securely delivered."

The Asserted Claims are directed to an abstract idea. The claims are directed to the abstract idea of collecting messages and delaying their delivery until a condition has occurred. Alternatively, the claims are directed to the abstract idea of batch delivery of messages, including priority delivery of urgent messages. Alternatively, the claims are directed to the abstract idea of a delivery system that distributes messages based on set criteria. Alternatively, the claims are directed to the abstract idea of push notifications. Alternatively, the claims are directed to the abstract idea of screening messages and delivering them in response to conditions. Alternatively, the claims are directed to the abstract idea of receiving, screening, and distributing messages. The claims fall within a well-established category of abstract ideas related to collecting, analyzing, and presenting information, or "gathering, storing, and transmitting information"—and resemble message-routing or -screening claims held to be abstract in similar contexts.[2] For example, certain ineligible claims in *Intellectual Ventures I* recited a process for "receiving and redistributing email

[2] *See, e.g.*, *Intell. Ventures I LLC v. Symantec Corp.*, 838 F.3d 1307, 1314-20 (Fed. Cir. 2016) (concluding that claims to methods of "routing" or "screening" messages based on rules were directed to an abstract idea at step one when they "merely applie[d] a well-known idea using generic computers"); *Elec. Commc'n Techs., LLC v. ShoppersChoice.com, LLC*, 958 F.3d 1178, 1180, 1182 (Fed. Cir. 2020) (claims for an "automated notification system"); *Return Mail, Inc. v. USPS*, 868 F.3d 1350, 1368 (Fed. Cir. 2017) (concluding that claims related to "processing of mail items" and "relaying mailing address data" were directed to an abstract idea at step one when they "simply recite[d] [an] existing business practice with the benefit of generic computing technology"), *rev'd and remanded on other grounds*, 587 U.S. 618 (2019); *Mobile Telecomm. Techs., LLC v. UPS, Inc.*, 172 F. Supp. 3d 1324, 1328, 1330 (N.D. Ga. 2016) (claimed directed to "methos for providing notification of an express mail delivery" abstract and analogous to prior "business practices"); *Thompson v. TCT Mobile, Inc.*, No. 19-cv-899, 2020 WL 1531333, at *5 (D. Del. Mar. 31, 2020) (ineligible claims directed to abstract idea of "screening communications" where claims recited receiving messages, delaying notification, and delivering messages upon particular conditions being met); *TJTM Techs., LLC v. Google LLC*, No. 24-cv-1232, 2024 WL 5106443, at *2, *3-4 (N.D. Cal. Oct. 22, 2024) (ineligible claims directed to abstract idea of "suppressing notifications" where claims recited receiving communications and suppressing notifications until certain conditions/modes are met).

messages on a computer network" that involved, like the Asserted Claims, messages with specific recipients, rules or conditions for delivery, and a distribution mechanism that would control delivery and "defer[] delivery" based on actions and conditions. 838 F.3d at 1316-18. And the ineligible claims in *Thompson* and *TJTM* recited screening notifications—namely, receiving messages, collecting/buffering them, and delivering them only upon certain conditions being met. *Thompson*, 2020 WL 1531333, at *1-2, *4-10; *TJTM*, 2024 WL 5106443, at *2, *3.

These abstract ideas can be described or framed in various ways. Amazon reserves the right to rely on reasonable variations of the abstract ideas articulated above.

The Asserted Claims perform, in a generic computer environment, longstanding practices applied manually in corporate mailrooms (and message-delivery or postal systems). Claims "that are directed to longstanding commercial practices do not pass step one." *ECT*, 958 F.3d at 1182; *Return Mail*, 868 F.3d at 1368; *Esignature Software LLC v. Adobe Inc.*, No. 2023-1711, 2024 WL 3289488, at *2-3 (Fed. Cir. 2024); *Intell. Ventures I*, 838 F.3d at 1317; *Mobile Telecomm.*, 172 F. Supp. 3d at 1330. For instance, a generic corporate mailroom commonly uses conditional delivery timing practices (i.e., mail is not always delivered immediately upon receipt; delivery depends on predefined triggers such as urgency flags, deadlines, or events). The claimed networked system effectively automates a mailroom's infrastructure and policies. "Messages" are akin to envelopes or parcels. "Software components" are akin to specific business functions or teams authorized to receive certain mail. "Triggers" are akin to mailroom rules and events that dictate when items leave the mailroom for delivery (e.g., urgent matters, scheduled runs, batching windows). *See, e.g.*, *Intell. Ventures I*, 838 F.3d at 1317-18 (holding claims abstract as "analog[ous] to a corporate mailroom," as such mailrooms "receive correspondence, keep business rules defining actions to be taken … based on attributes of the correspondent, apply those business rules to correspondence,

and take certain actions based on the application of business rules," including "forwarding the message").

The claims recite generic computer components (e.g., "network server system," "link interface," "agent," "device," "software components," "messages," "network interface," "network elements," "memory," "logic," "content," "wireless network," "identifier"), as well as functions (e.g., "buffer content," "determine when … triggers … has occurred," "supply one or more messages," "maintain the … message link," "receive … messages," "cause messages … to be securely delivered"). They use "result-orientated, functional language and omit any specific requirements as to how these steps … are performed." *Mobile Acuity*, 110 F.4th at 1292-93. And "with the exception of generic computer-implemented steps, there is nothing in the claims themselves that forecloses them from being performed by a human, mentally or with a pen and paper." *Intell. Ventures I*, 838 F.3d at 1318.

The Asserted Claims are also not directed to an advance in computer technology. The Federal Circuit has identified "two inquiries of significance": (1) "whether the focus of the claimed advance is on a solution to a problem specifically arising in the realm of computer networks or computers" and (2) "whether the claim is properly characterized as identifying a specific improvement in computer capabilities or network functionality." *TecSec*, 978 F.3d at 1293. Neither is the case here. Rather, the computer elements are "invoked merely as a tool." *Credit Acceptance Corp. v. Westlake Servs.*, 859 F.3d 1044, 1055 (Fed. Cir. 2017). Moreover, the patent cites supposed problems that are not unique to the realm of computer technology but are common to off-computer message-delivery problems encountered in mailrooms and even postal facilities. *See, e.g.*, '320 Patent at 1:6-29. The specification states that "mass market digital communications and content distribution" (i.e., a large demand for sending and receiving many messages) result in

networks "pressed for user capacity" or "user capacity constrained." *Id.* at 1:6-14. The same problems are present when an offline communication network—say, a corporate facility or the postal system—has a significant volume of packages or messages relative to the capacity to deliver them in real time. And offline communication networks have adopted the same solutions that the '320 Patent presents by collecting messages and delivering them upon particular triggers and conditions. The '320 Patent simply automates a prior solution on a computer network.

Nor is the fact that the claims are limited "to a particular environment" (i.e., electronic messages rather than a physical mailroom) sufficient to make the claims non-abstract. *Return Mail*, 868 F.3d at 1368; *Esignature*, 2024 WL 3289488, at *3. Moreover, "mere automation of manual processes … does not constitute a patentable improvement in computer technology." *Credit Acceptance*, 859 F.3d at 1054-56.

To the extent that dependent claims recite additional abstract ideas, that is insufficient to confer eligibility because adding an abstract idea to another does not render a claim not directed to an abstract idea.

2. Alice *step two*. The Asserted Claims lack an inventive concept beyond the abstract idea that transforms them into significantly more than the abstract idea. For instance, independent claim 1 "is specified at a high level of generality, is specified in functional terms, and merely invokes well-understood, routine, conventional components and activity to apply the abstract idea identified previously." *ECT*, 958 F.3d at 1183; *see also, e.g.*, *Elec. Power Grp.*, 830 F.3d at 1355 (patent claims were ineligible under § 101 in part because "[n]othing in the claims, understood in light of the specification, requires anything other than off-the-shelf, conventional computer, network, and display technology for gathering, sending, and presenting the desired information").

Each hardware component recited in the claims is generic computer technology that is merely functionally defined. Moreover, there is nothing unconventional about the ordering or arrangement of the generic components. *In re TLI Commc'ns*, 823 F.3d at 615 (holding that "vague, functional descriptions of server components are insufficient to transform the abstract idea into a patent-eligible invention"); *Mortg. Grader*, 811 F.3d at 1324 (holding no inventive concept where "the claims 'add' only generic computer components such as an 'inter-face,' 'network,' and 'database' "). "Significantly, the claims do not provide details as to any non-conventional software for enhancing" any process. *Credit Acceptance*, 859 F.3d at 1057. The specification does not describe any of the recited software or hardware components as new; rather, it is the supposed use of the abstract idea that is presented as new, and the components and features are described generically. *See, e.g.*, '320 patent at 5:25-40 (acknowledging that "technical material that is known in the technical fields related to the invention has not been described in detail so that the invention is not unnecessarily obscured"); *Beteiro, LLC v. DraftKings Inc.*, 104 F.4th 1350, 1358 (Fed. Cir. 2024) ("Where, as here, the specification describes the components and features listed in the claims generically, it supports the conclusion that these components and features are conventional." (cleaned up)); *Weisner v. Google LLC*, 51 F.4th 1073, 1083-84 (Fed. Cir. 2022) (same).

The specification itself repeatedly discloses that the alleged invention is meant to operate using conventional hardware and software, and that the underlying components and protocols are well known.[3] The specification confirms that the claimed components are conventional, as the

[3] *See, e.g.*, '320 Patent at 7:37-47 ("…base stations, also sometimes referred to as access points, base terminals, terminal nodes or other well known acronyms…"), 18:12-34 ("… conventional hierarchical access network infrastructure architectures."), 18:57-19:9 ("…conventional hierarchical access network …"), 21:30-55 ("…using a conventional UMTS network. As shown, the base stations 125 … connect to the conventional UMTS network."), 24:65-25:57 ("… conventional base stations …"), 27:1-45 ("As shown in FIG. 9, device 100 also includes a processor 930, sometimes referred to as a CPU or central processor unit, an APU or application processor unit, a core processor, a computing device, or many other well known terms."), 47:4-50 ("… the agent performs or (securely) communicates with other software/hardware device/network components that perform other well known signature, behavior blocking and/or intrusion detection identification/detection and/or blocking techniques …"), 84:33-85:8 ("… conventional

method "can operate on a conventional communications network" through conventional protocols. *Intell. Ventures I*, 838 F.3d at 1318 (cleaned up).

3. ***Representativeness.*** Independent claim 1 is representative. Dependent claims 2-18 do no more than "tack on generic computer components" or "introduce conventional computer activities" and are "directed to the same abstract idea," and thus may be treated as representative. *Mobile Acuity*, 110 F.4th at 1291; *see also Smart Sys.*, 873 F.3d at 1368 n.7 (claims "should rise or fall together" when they "contain only minor differences in terminology but require performance of the same basic process"). They "merely add trivial variations of the abstract idea … that do not change the focus of the asserted claims." *Trinity Info*, 72 F.4th at 1362.

The dependent claims contain the same limitations and remain directed to the same abstract idea, as none of the additional limitations changes the focus of the alleged claimed advance, and rather constitute additional generic computer components, conventional computer activities, or trivial variations of the abstract idea. *See* Exhibit A-1 (chart).

Because the above shows that the claims are "substantially similar and linked to the same" ineligible concept, the patent owner has the burden "to present non-frivolous arguments as to why the eligibility of the identified representative claims cannot be treated as decisive of the eligibility

---

billing system …"), 86:3-49 ("… elements detected locally using various malicious code, behavior blocking, intrusion detection, and/or other well known techniques for security analysis."), 88:59-89:10 ("As described herein, there are numerous ways to implement the control plane communication channel …. … Other techniques that could be used for this function include, for example, … running a more conventional VPN or IPSEC channel, …"), 89:11-90:4 ("For example, various known security encryption techniques can be implemented in the encrypt functions …, with public/private or completely private keys and/or signatures so that very strong levels of security for service processor control plane traffic can be achieved even through the basic transport services … implemented with standard secure or open Internet networking protocols, such as TLS or TCP."), 113:39-53 ("While the embodiments described below with respect to FIGS. 48 through 63 are depicted in the context of a conventional multi-tier access network, one of ordinary skill in the art will appreciate that such embodiments can also be generalized to other network topologies including the various flattened network topologies described herein."), 126:35-127:9 ("… certain security credentials and/or using various other well known secure data storage techniques, such as the various secure storage techniques described herein."), 132:3-42 ("… the conventional service gateway functions …"), 156:4-33 ("… applicable to conventional communication products as well as machine to machine applications."); *see also id.* at Figs. 56, 58, 60, 62 ("Conventional Gateway Functions").

of all claims in the group," such as establishing that "a claim limitation not found in the representative claim has 'distinctive significance' that would have a material impact on the eligibility analysis." *Mobile Acuity*, 110 F.4th at 1290 (citation omitted). Amazon reserves the right to respond should Headwater do so.

4. ***Claim construction*.** Amazon is aware of no reasonable claim constructions that would affect the analysis under § 101, and the analysis would be the same under any reasonable construction. It is the patent owner's burden to propose specific constructions and identify how they would affect the analysis. *See, e.g.*, *Simio*, 983 F.3d at 1365; *Esignature*, 2024 WL 3289488, at *4; *ECT*, 958 F.3d at 1184; *Trinity Info*, 72 F.4th at 1360-61 & nn.3-4; *Sanderling*, 65 F.4th at 706. If patent owners do so, Amazon reserves its right to respond.

B. Ineligibility of the '192 patent

1. Alice *step one*. Independent claim 15, which is representative (*see infra*),[4] recites a "method of operating a message link server." The method comprises "maintaining … a secure message link through an Internet network" between the server and a "device link agent" on a plurality of "wireless end-user devices," "receiving network element messages" for delivery to devices and authorized software components, "buffering content" from the messages, "determining when one of a plurality of message delivery triggers … has occurred" (including "the occurrence of an asynchronous event with time-critical messaging needs"), and "upon determining that one of the message delivery triggers has occurred, supplying one or more messages comprising the buffered content for delivery on the secure message link maintained between the message link server and a device link agent on the given one of the wireless end-user devices."

[4] Amazon reserves the right to respond if Headwater argues that claim 15 is not representative.

The ’192 patent, whose claims are substantially similar to those of the ’320 patent, is directed to the same abstract ideas as the ’320 patent. *See supra*. For instance, the steps recited in the independent claims are essentially the same. *See* Exhibits A-1, A-2 (charts).

To the extent that dependent claims recite additional abstract ideas, that is insufficient to confer eligibility because adding an abstract idea to another does not render a claim not directed to an abstract idea.

2. Alice *step two*. The Asserted Claims lack an inventive concept beyond the abstract idea that transform them into significantly more than the abstract idea. For instance, independent claim 15 “is specified at a high level of generality, is specified in functional terms, and merely invokes well-understood, routine, conventional components and activity to apply the abstract idea identified previously.” *ECT*, 958 F.3d at 1183; *see also, e.g.*, *Elec. Power Grp.*, 830 F.3d at 1355 (patent claims were ineligible under § 101 in part because “[n]othing in the claims, understood in light of the specification, requires anything other than off-the-shelf, conventional computer, network, and display technology for gathering, sending, and presenting the desired information”).

Each hardware component recited in the claims is generic computer technology that is merely functionally defined. Moreover, there is nothing unconventional about the ordering or arrangement of the generic components. *In re TLI Commc’ns*, 823 F.3d at 615 (holding that “vague, functional descriptions of server components are insufficient to transform the abstract idea into a patent-eligible invention”); *Mortg. Grader*, 811 F.3d at 1324 (holding no inventive concept where “the claims ‘add’ only generic computer components such as an ‘inter-face,’ ‘network,’ and ‘database’ ”). “Significantly, the claims do not provide details as to any non-conventional software for enhancing” any process. *Credit Acceptance*, 859 F.3d at 1057. The specification does not describe any of the recited software or hardware components as new; rather, it is the supposed use

of the abstract idea that is presented as new, and the components and features are described generically. *See, e.g.*, '320 patent at 5:25-40 (acknowledging that "technical material that is known in the technical fields related to the invention has not been described in detail so that the invention is not unnecessarily obscured"); *Beteiro*, 104 F.4th at 1358 ("Where, as here, the specification describes the components and features listed in the claims generically, it supports the conclusion that these components and features are conventional." (cleaned up)); *Weisner*, 51 F.4th at 1083-84 (same).

The specification itself repeatedly discloses that the alleged invention is meant to operate using conventional hardware and software, and that the underlying components and protocols are well known.[5] The specification confirms that the claimed components are conventional, as the method "can operate on a conventional communications network" through conventional protocols. *Intell. Ventures I*, 838 F.3d at 1318 (cleaned up).

3. *Representativeness*. Independent claim 15 is representative. Independent claim 1 and dependent claims 2-14 do no more than "tack on generic computer components" or "introduce conventional computer activities" and are "directed to the same abstract idea," and thus may be treated as representative. *Mobile Acuity*, 110 F.4th at 1291; *see also Smart Sys.*, 873 F.3d at 1368 n.7 (claims "should rise or fall together" when they "contain only minor differences in terminology but require performance of the same basic process"). They "merely add trivial variations of the abstract idea … that do not change the focus of the asserted claims." *Trinity Info*, 72 F.4th at 1362.

For instance, claim 1 simply recites a server containing generic computer components that merely executes steps that are the same method as claim 15. Claim 1 recites only generic computer components to perform those functions: a "transport services stack" (*compare* limitation 1[a] *with*

[5] The same shared disclosures apply to the '192 patent as the '320 patent. *See supra*.

limitation 15[a]), an "interface to a network" (*compare* limitation 1[b] *with* limitation 15[b]), and a "message buffer system including a memory and logic" (*compare* limitations 1[c]-[f] *with* limitations 15[c]-[e]). Beyond reciting those generic computer components, *see also supra* at __ (explaining that components are generic), claim 1 does not recite any technological means by which the steps are carried out. Moreover, the functions in in claim 15 would naturally be performed by the recited generic components anyway.

The dependent claims contain the same limitations and remain directed to the same abstract idea, as none of the additional limitations changes the focus of the claimed advance, and rather constitute additional generic computer components, conventional computer activities, or trivial variations of the abstract idea. *See* Exhibit A-2 (chart).

Because the above shows that the claims are "substantially similar and linked to the same" ineligible concept, the patent owner has the burden "to present non-frivolous arguments as to why the eligibility of the identified representative claims cannot be treated as decisive of the eligibility of all claims in the group," such as establishing that "a claim limitation not found in the representative claim has 'distinctive significance' that would have a material impact on the eligibility analysis." *Mobile Acuity*, 110 F.4th at 1290 (citation omitted). Amazon reserves the right to respond should Headwater do so.

4. ***Claim construction*.** Amazon is aware of no reasonable claim constructions that would affect the analysis under § 101, and the analysis would be the same under any reasonable construction. It is the patent owner's burden to propose specific constructions and identify how they would affect the analysis. *See, e.g.*, *Simio*, 983 F.3d at 1365; *Esignature*, 2024 WL 3289488, at *4; *ECT*, 958 F.3d at 1184; *Trinity Info*, 72 F.4th at 1360-61 & nn.3-4; *Sanderling*, 65 F.4th at 706. If patent owners do so, Amazon reserves its right to respond.

VI. AMAZON'S DOCUMENT PRODUCTION

Amazon has produced documents in compliance with Judge Albright's March 5, 2025 Standing Order Governing Proceedings (OGP)–Patent Cases, and the Scheduling Order (ECF No. 29) as AMAZON286_00000001 - AMAZON286_00000432. Amazon has also made materials designated "HIGHLY CONFIDENTIAL – OUTSIDE ATTORNEYS' EYES ONLY – SOURCE CODE" available on a stand-alone computer located in the San Francisco office of Perkins Coie: 505 Howard St Suite 1000, San Francisco, CA 94105. Amazon will allow review of that material once a Protective Order is entered in this case, under the terms of that Protective Order.

DATED: December 12, 2025

By: */s/ Nathan B. Sabri*

Thomas N. Millikan, CA SBN 234430
Email: *TMillikan@perkinscoie.com*
PERKINS COIE LLP
11452 El Camino Real, Ste. 300
San Diego, CA 92130
Tel. 858-720-5700

Janice L. Ta, TX SBN 24075138
Email: *JTa@perkinscoie.com*
PERKINS COIE LLP
405 Colorado Street, Ste. 1700
Austin, TX 78701
Tel. 737-256-6120

Nathan B. Sabri, *pro hac vice*
Email: *NSabri@perkinscoie.com*
Mathieu A. Swiderski, *pro hac vice*
Email: *MathieuSwiderski@perkinscoie.com*
PERKINS COIE LLP
505 Howard Street, Ste. 100
San Francisco, CA 94105
Tel. 415-344-7000

David R. Pekarek Krohn, WI SBN 1092062
Email: *DPekarekkrohn@perkinscoie.com*
PERKINS COIE LLP
33 East Main Street, Suite 201
Madison, WI 53703
Tel. 608-663-7496

Deron R. Dacus, TX SBN 00790553
Email: *ddacus@dacusfirm.com*
THE DACUS FIRM
821 ESE Loop 323
Tyler, TX 75701
Tel. 903-705-1117

ATTORNEYS FOR DEFENDANTS Amazon.com, Inc., Amazon.com Services, LLC, and Amazon Web Services, Inc

CERTIFICATE OF SERVICE

Pursuant to the Federal Rules of Civil Procedure and Local Rule CV-5, I hereby certify that, on December 12, 2025, all counsel of record who have appeared in this case are being served with a copy of the foregoing via email.

/s/ Antonio Ramos
Antonio Ramos
Senior Paralegal

EXHIBIT 9

Trials@uspto.gov
571-272-7822

Paper 7
Date: May 23, 2024

UNITED STATES PATENT AND TRADEMARK OFFICE

BEFORE THE PATENT TRIAL AND APPEAL BOARD

SAMSUNG ELECTRONICS CO., LTD.,
Petitioner,

v.

HEADWATER RESEARCH LLC,
Patent Owner.

IPR2024-00010
Patent 9,615,192 B2

Before GARTH D. BAER, STEPHEN E. BELISLE, and RUSSELL E. CASS, *Administrative Patent Judges.*

CASS, *Administrative Patent Judge*.

DECISION
Granting Institution of *Inter Partes* Review
35 U.S.C. § 314

I. INTRODUCTION

A. Background

Samsung Electronics Co., Ltd. ("Petitioner") filed a Petition requesting an *inter partes* review of claims 1–9, 11–13, and 15 (the "challenged claims") of U.S. Patent No. 9,615,192 B2 (Ex. 1001, "the '192 patent"). Paper 2, 1 ("Pet."). Headwater Research LLC ("Patent Owner") *did not* file a Preliminary Response.

An *inter partes* review may not be instituted unless it is determined that "the information presented in the petition filed under section 311 and any response filed under section 313 shows that there is a reasonable likelihood that the petitioner would prevail with respect to at least 1 of the claims challenged in the petition." 35 U.S.C. § 314 (2018); *see also* 37 C.F.R § 42.4(a) (2021) ("The Board institutes the trial on behalf of the Director."). The reasonable likelihood standard is "a higher standard than mere notice pleading," but "lower than the 'preponderance' standard to prevail in a final written decision." *Hulu, LLC v. Sound View Innovations, LLC*, IPR2018-01039, Paper 29, 13 (PTAB Dec. 20, 2019) (precedential).

For the reasons provided below and based on the record before us, we determine that Petitioner has demonstrated a reasonable likelihood that it would prevail in showing the unpatentability of at least one of the challenged claims. Accordingly, we institute an *inter partes* review on all grounds set forth in the Petition.

B. Real Parties in Interest

Petitioner states that the real parties in interest are Samsung Electronics Co., Ltd. and Samsung Electronics America, Inc. Pet. 98.

Patent Owner states that Headwater Research LLC is the real party in interest. Paper 4, 1.

C. Related Proceedings

The parties indicate that the '192 patent is the subject of the following district court case: *Headwater Research LLC v. Samsung Electronics Co., Ltd.*, No. 2:23-cv-00103 (E.D. Tex.). Pet. 98–99; Paper 4, 2.

D. The '192 Patent (Ex. 1001)

The '192 patent relates to a "message link server" that "maintains secure message links with device link agents on each of a plurality of wireless end-user devices." Ex. 1001, code (57). Multiple network elements "send messages to the message link servicer" that are targeted to deliver "message content to specific software components on respective ones of the wireless end-user devices." *Id.* The system also includes a "message buffering system in the server" that "buffers messages targeted to each device until one of several triggers occur." *Id.* As a result, "messages that do not have time-critical messaging needs may be buffered until the occurrence of a trigger other than the receipt of that message by the server." *Id.*

Figure 16 illustrates communication between a service controller 122 and a device 100 over a service control link 1653.

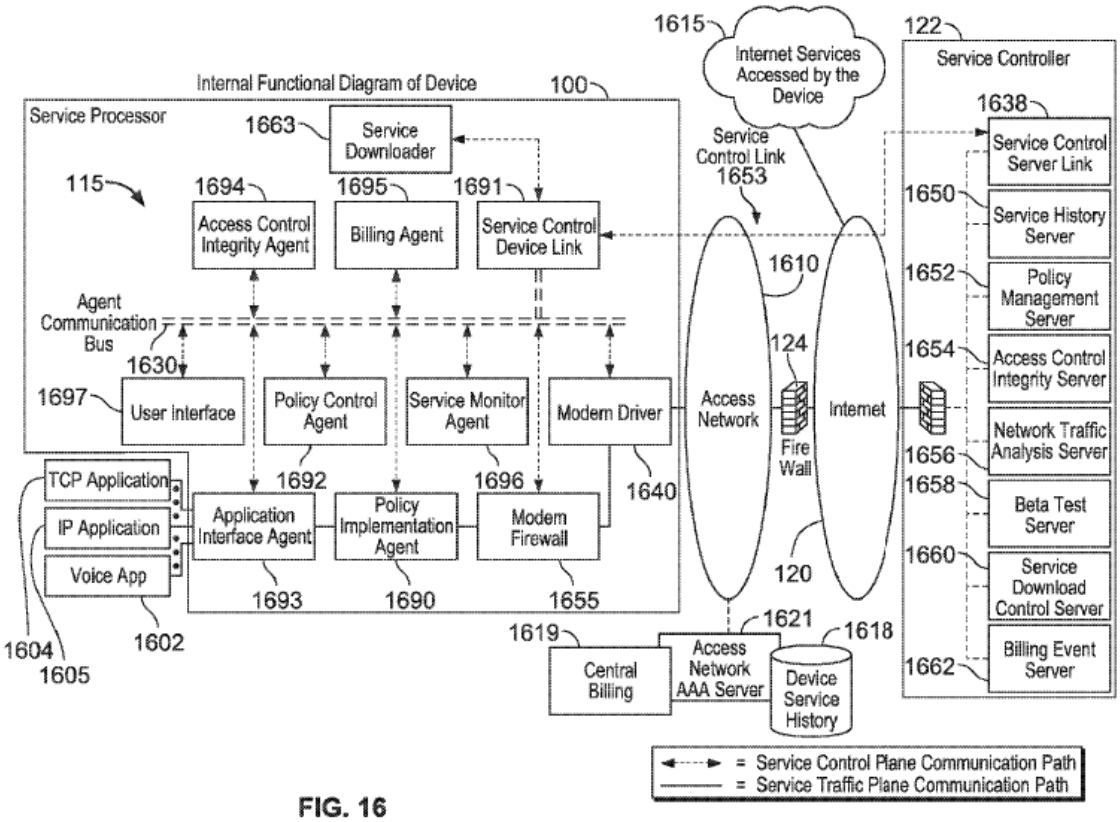

FIG. 16

Figure 16 of the '192 patent is a functional diagram illustrating a device based service processor and a service controller in accordance with certain embodiments of the invention. Ex. 1001, 2:22–24, 37:26–28.

As shown in Figure 16, service controller 122 includes servers 1650, 1652, 1654, 1656, 1658, 1660, and 1662 coupled to service control server link 1638. Ex. 1001, 76:30–78:60, Fig. 16. Device 100 includes service processor 115, including service control device link 1691, which provides communication for various agents in the service processor. *Id.* at 37:26–38:24, Fig. 16.

E. Illustrative Claim

Of challenged claims 1–9, 11–13, and 15, claims 1 and 15 are independent. For purposes of the issues raised at this stage of the proceeding, claim 1 is illustrative and is reproduced below.

[1pre] A message link server comprising:

[1a] a transport services stack to maintain a respective secure message link through an Internet network between the message link server and a respective device link agent on each of ap plurality of wireless end-user devices,

[1b] each of the wireless end-user devices comprising multiple software components authorized to receive and process data from secure message link messages received via a device link agent on that device;

[1c1] an interface to a network to receive network element messages from a plurality of network elements,

[1c2] the received network element messages comprising respective message content and requests for delivery of the respective message content to respective wireless end-user devices, the respective message content including data for, and an identification of, a respective one of the authorized software components; and

[1d1] a message buffer system including a memory and logic,

[1d2] the memory to buffer content from the received network element messages for which delivery is requested to a given one of the wireless end-user devices,

[1d3] the logic to determine when one of a plurality of message delivery triggers for the given one of the wireless end-user devices has occurred, wherein for at least some of the received network element messages, the receipt of such a message by the message buffer system is not a message delivery trigger, and for at least one of the message delivery triggers, the trigger is the occurrence of an asynchronous event with time-critical messaging needs, and

[1d4] upon determining that one of the message delivery triggers has occurred, the logic further to supply one or more messages comprising the buffered content to the transport services stack for delivery on the secure message link maintained between the transport services stack and a

device link agent on the given one of the wireless end-user devices.

Ex. 1001, 167:8–45 (indents and bracketed paragraph identifiers added).

F. Applied References

Petitioner relies upon the following references:

3GPP TS 23.140 v6.9.0 (2005-03), 3rd Generation Partnership Project, Technical Specification Group Terminals, Multimedia Messaging Service (MMS), Functional Description, Stage 2 (Ex. 1004, "TS-23.140");

Shen, US 2005/0207379 A1, published Sep. 22, 2005 (Ex. 1014, "Shen");

Ellison, US 7,082,615 B1, issued Jul. 25, 2006 (Ex. 1019, "Ellison");

Rakic, US 2009/0282256 A1, published Nov. 12, 2009 (Ex. 1015, "Rakic");

WO 2006/077283 A1, published Jul. 27, 2006 (Ex. 1007, "Houghton"); and

Munson, US 2009/0240807 A1, published Sep. 24, 2009 (Ex. 1017, "Munson").

Pet. vii–viii, 2. Petitioner also submits the Declaration of Dr. Patrick Traynor (Ex. 1003).

G. Asserted Grounds of Unpatentability

Petitioner challenges the patentability of claims 1–9, 11–13, and 15 of the '192 patent based on the following grounds:

Claim(s) Challenged	35 U.S.C. §	Reference(s)/Basis
1, 5–7, 9, 11–13, 15	103(a) [1]	TS-23.140
2, 3	103(a)	TS-23.140, Shen

[1] The Leahy-Smith America Invents Act, Pub. L. No. 112-29, 125 Stat. 284 (2011) ("AIA"), included revisions to 35 U.S.C. § 103 that became effective

Claim(s) Challenged	35 U.S.C. §	Reference(s)/Basis
4	103(a)	TS-23.140, Ellison
8	103(a)	TS-23.140, Rakic
1, 5–7, 9, 11–13, 15	103(a)	Houghton, Munson
2, 3	103(a)	Houghton, Munson, Shen
4	103(a)	Houghton, Munson, Ellison
8	103	Houghton, Munson, Rakic

Pet. 1.

II. DISCUSSION

A. Claim Construction

A claim "shall be construed using the same claim construction standard that would be used to construe the claim in a civil action under 35 U.S.C. § 282(b)." 37 C.F.R. § 42.100(b). At this stage of the proceeding, neither party presents any claim terms for construction. Pet. 2–3.[2] Based on the present record, we determine that it is not necessary to provide an express interpretation of any claim terms at this time. *See Realtime Data, LLC v. Iancu*, 912 F.3d 1368, 1374 (Fed. Cir. 2019) ("The Board is required to construe 'only those terms . . . that are in controversy, and only to the extent necessary to resolve the controversy.'") (quoting *Vivid Techs., Inc. v. Am. Sci. & Eng'g, Inc.*, 200 F.3d 795, 803 (Fed. Cir. 1999)).

---

after the filing of an application to which the '192 patent claims priority. For purposes of this Decision, we apply the pre-AIA version of 35 U.S.C. § 103.

[2] As noted above, Patent Owner has not submitted a preliminary response.

B. Principles of Law

A claim is unpatentable under 35 U.S.C. § 103 if "the differences between the subject matter sought to be patented and the prior art are such that the subject matter as a whole would have been obvious at the time the invention was made to a person having ordinary skill in the art to which said subject matter pertains." *KSR Int'l Co. v. Teleflex Inc.*, 550 U.S. 398, 406 (2007). The question of obviousness is resolved on the basis of underlying factual determinations, including (1) the scope and content of the prior art; (2) any differences between the claimed subject matter and the prior art; (3) the level of skill in the art; and (4) where in evidence, objective evidence of non-obviousness.[3] *Graham v. John Deere Co. of Kansas City*, 383 U.S. 1, 17–18 (1966). When evaluating a combination of teachings, we must also "determine whether there was an apparent reason to combine the known elements in the fashion claimed by the patent at issue." *KSR*, 550 U.S. at 418 (citing *In re Kahn*, 441 F.3d 977, 988 (Fed. Cir. 2006)). Whether a combination of prior art elements would have produced a predictable result weighs in the ultimate determination of obviousness. *Id.* at 416–417.

In an *inter partes* review, the petitioner must show with particularity why each challenged claim is unpatentable. *Harmonic, Inc. v. Avid Technology, Inc.*, 815 F.3d 1356, 1363 (Fed. Cir. 2016); 37 C.F.R. § 42.104(b). The burden of persuasion never shifts to Patent Owner. *Dynamic Drinkware, LLC v. Nat'l Graphics, Inc.*, 800 F.3d 1375, 1378 (Fed. Cir. 2015).

[3] At this stage of the proceeding, Patent Owner has not presented objective evidence of non-obviousness.

We analyze the challenges presented in the Petition in accordance with the above-stated principles.

C. Level of Ordinary Skill in the Art

Petitioner introduces the testimony of Dr. Traynor that a person of ordinary skill in the art would have had "(1) at least a bachelor's degree in computer science, electrical engineering, or a related field, and (2) 3–5 years of experience in services and application implementation in communication networks." Pet. 3 (citing 1003 ¶¶ 21–22). Petitioner further states that "[a]dditional graduate education could substitute for professional experience, and vice versa." *Id.*

For purposes of this Decision, we adopt the assessment of the level of ordinary skill in the art proposed by Petitioner and Dr. Traynor and not disputed by Patent Owner as reasonable and consistent with the prior art. *See Okajima v Bourdeau*, 261 F.3d 1350, 1355 (Fed. Cir 2001) (the prior art may reflect an appropriate level of skill in the art).

D. Ground 1:[4] Asserted Obviousness of Claims 1, 5–7, 9, 11–13, and 15 Based on TS-23.140

Petitioner contends that claims 1, 5–7, 9, 11–13, and 15 would have been obvious based on TS-23.140. Pet. 5–33. As noted previously, Patent Owner did not submit a preliminary response to the Petition.

1. Overview of TS-23.140 (Ex. 1004)

TS-23.140 is a technical specification from the 3rd Generation Partnership Project (3GPP) relating to "group terminals" and "multimedia

[4] Here, and elsewhere in the Decision, the identification of the grounds using designations such as "Ground 1" and "Ground 2" refers to the designation of the grounds as presented in the Petition.

messaging service (MMS)." Ex. 1004, 1. This document "contains the core functions for a non-realtime Multimedia Messaging Service, MMS, which are sufficient to provide a basic service." *Id.* at 10.

TS-23.140 illustrates an MMS reference architecture in Figure 3, reproduced below.

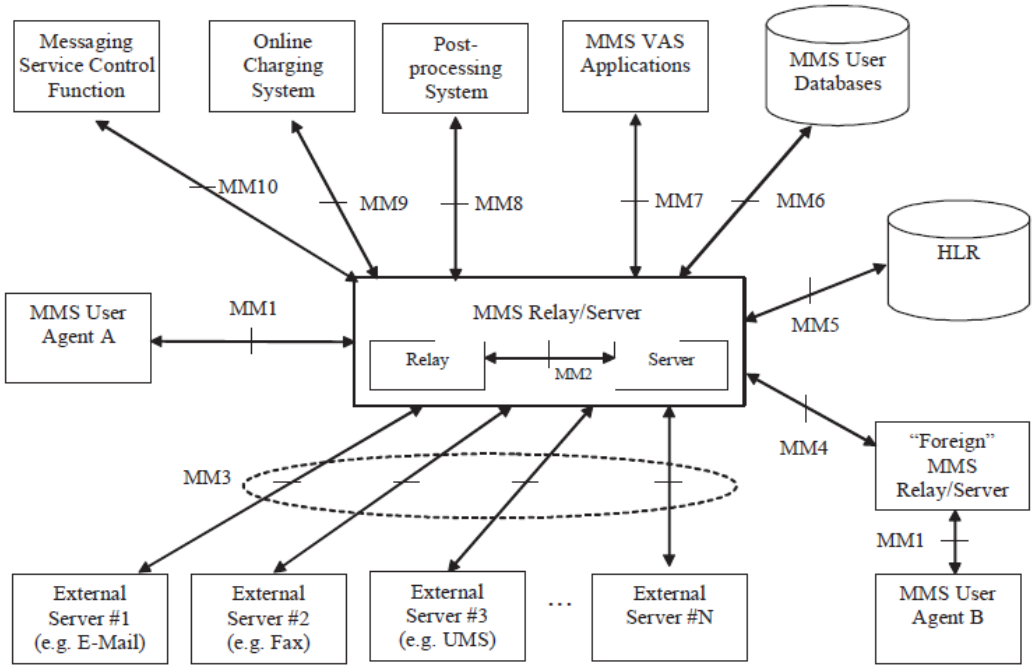

Figure 3 of TS-23.140 shows an MMS Reference Architecture and identifies reference points within an MMS network architecture (MMSNA). Ex. 1004, 14, 23.

As TS-23.140 explains, "[t]he MMS Relay/Server is responsible for storage and notification, reports, and general handing of messages." Ex. 1004, 21. The MMS Relay/Server "may also provide convergence functionality between External Servers and MMS User Agents and thus enable the integration of different server types across different networks." *Id.* The MMS can be used to send messages, including "data specific to applications between two MMS User Agents or an MMS User Agent and an MMS VAS Application (or vice versa)." *Id.* at 55.

2. Analysis of Independent Claim 1

a) [1pre] "A message link server comprising:"

Petitioner argues that, "[i]f the preamble is limiting, TS-23.140 renders obvious a message link server (MMS Server/Relay) and a method for operating" it. Pet. 6 (citing Ex. 1003 ¶¶ 95–102). Petitioner asserts that the "MMS/Relay Server is a message link server because it facilitates message delivery between devices/elements (user devices, other network elements) over a network," as shown in Petitioner's annotated version of Figure 2 of TS-23.140, reproduced below. *Id.*

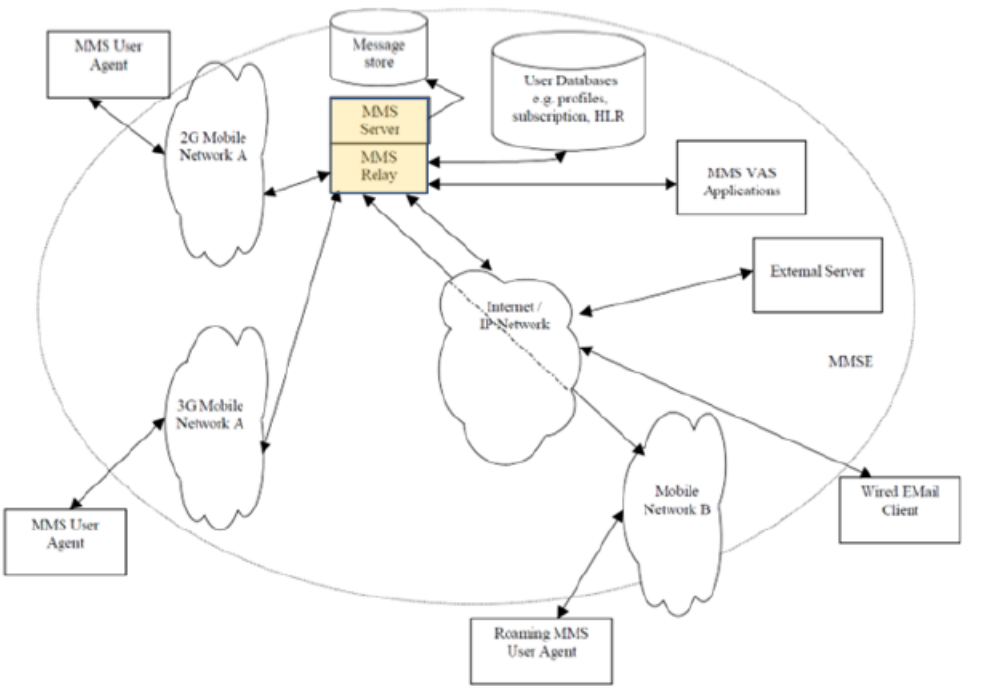

Figure 2: MMS Architectural Elements

Petitioner's annotated version of Figure 2 of TS-23.140 showing the MMS Server and MMS Relay highlighted in yellow. Pet. 7 (citing Ex. 1004, 17, Fig. 2; Ex. 1003 ¶¶ 95–96).

According to Petitioner, the "MMS Relay/Server stores and handles 'incoming'/'outgoing messages' and transfers messages 'between different messaging systems,' including between MMS User Agents/UEs, or MMS

User Agents and MMS VAS Applications." *Id.* (citing Ex. 1004, 14; Ex. 1003 ¶¶ 97–99). Further, Petitioner contends, the "MMS Relay/Server also facilities data transport to applications between two MMS User Agents or an MMS User Agent and an MMS VAS Application." *Id.* (citing Ex. 1004, 54–55; Ex. 1003 ¶¶ 100–101).

Petitioner's contentions are supported by the cited portions of TS-23.140. After consideration of the contentions and the evidence of record at this early stage, we determine that Petitioner has shown sufficiently that TS-23.140 discloses the preamble of claim 1 for purposes of institution.[5]

b) [1a] a transport services stack to maintain a respective secure message link through an Internet network between the message link server and a respective device link agent on each of ap plurality of wireless end-user devices,

Petitioner argues that TS-23.140 "renders obvious a transport services stack (transport layer security (TLS)-based transport protocol) to maintain a respective secure message link through an Internet network between the message link server (MMS Relay/Server) and a respective device link agent (MMS User Agent) on each of multiple wireless end-user devices (mobile phones/terminals/UEs)." Pet. 8 (citing Ex. 1003 ¶¶ 103–116). Petitioner asserts that Figure 2 of TS-23.140, reproduced below, shows MMS Relay/Server communicating via an Internet network with MMS User agents executing on each UE/phone.

[5] Because Petitioner presents sufficient evidence at this stage that TS-23.140 discloses the preamble, we need not determine whether the preamble is limiting for purposes of this Decision.

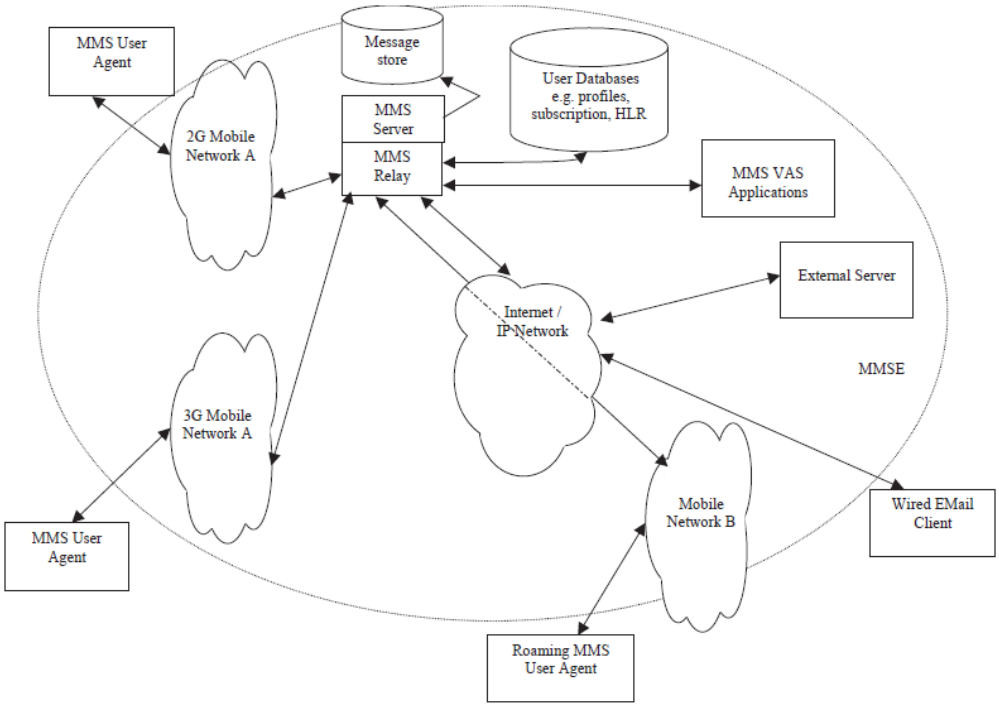

Figure 2 of TS-23.140 showing MMS architectural elements.
Ex. 1004, 17, Fig. 2.

According to Petitioner, Figure 2 shows an "environment with different network types provided using 'Internet protocol' that 'enables messaging in 2G and 3G wireless networks' and are 'compatible with messaging systems' on 'the Internet.'" Pet. 8 (citing Ex. 104, Fig. 2). Petitioner contends that the MMS User Agent "is a device link agent facilitating transmission/reception of multimedia messages (MMs) with/from different devices (e.g., MMS User Agents/UEs, MMS Relay/Server, MMS VAS Applications) linked over a communication network," as shown in Figure 2. *Id.* at 9 (citing Ex. 1004, 19–20, Ex. 1003 ¶ 106).

Petitioner also argues that "TS-23.140 discloses or renders obvious a 'transport services stack' consistent with its description in the '192 Patent." Pet. 9 (citing Ex. 1001, 89:24–41, 90:34–50; Ex. 1003 ¶¶ 107–108). Specifically, Petitioner asserts, the "MM1 Transfer Protocol and associated functionality (utilizing TCP and TLS/transport layer security) provides a

secure message link through an Internet Network between the message link server (MMS Relay/Server) and wireless end-user devices (UEs/terminals)." *Id.* (citing Ex. 1003 ¶¶ 109–110). Referring to Figure 4 of TS-23.140, reproduced below, Petitioner contends that the MM1 and MM3 Transfer Protocols "are implemented as the 'protocol framework' at the MMS Relay/Server to enable communications with the corresponding Transfer Protocols (MM1 or MM3) implemented at, e.g., another UE/External Server." *Id.* at 9–10.

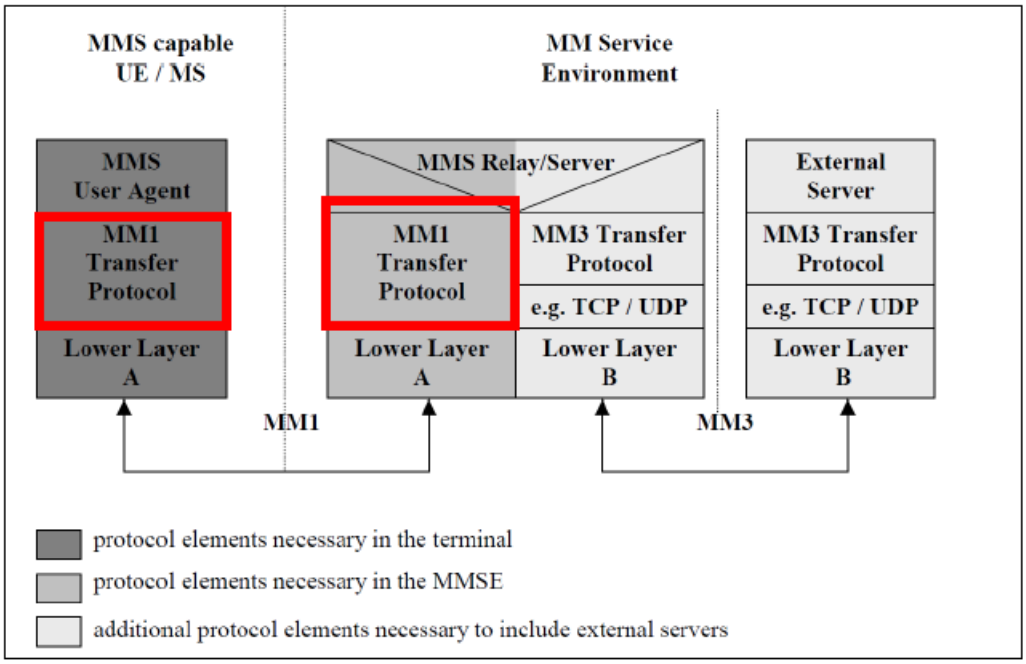

Petitioner's annotated version of Figure 4 of TS-23.140 showing the MM1 Transfer Protocol in the UE/MS and Service Environment highlighted in red. Pet. 10 (citing Ex. 1004, 24–25, Fig. 4).

Relying on Dr. Traynor, Petitioner argues that one of ordinary skill "would have understood or found obvious that the MM1 Transfer Protocol is a transport services stack that facilitates transmission/transport of network communications between the MMS Relay/Server and network elements

(e.g., MMS User Agent, MMS VAS Applications)." Pet. 10 (citing Ex. 1003 ¶¶ 111–114; Ex. 1013).

Petitioner further argues that "TS-23.140 contemplates 'WAP[(Wireless Application Protocol)]/OMA implementation' for the 'MM1 Transfer Protocol' and incorporates by reference Open Mobile Alliance (OMA specifications)," which Petitioner submits as Exhibit 1011, that "explain that 'a device implementing OMA MMS ***must have . . . WAP WSP stack or HTTP/TCP/IP stack***.'" *Id.* (citing Ex. 1004, 13, 162; Ex. 1003 ¶¶ 112–113; Ex. 1011, 11). "Moreover," according to Petitioner, "OMA specifications describe the 'TLS' 'security protocol' as providing 'secure data transmission between the MMS Client and the MMS Proxy-Relay in . . . HTTP based protocol stacks for MMSM implementation.'" *Id.* at 11 (citing Ex. 1010, 22; Ex. 1003 ¶¶ 112–113).

Petitioner contends that, based on these disclosures that are "expressly incorporated into TS-23.140," and "TLS's well-known use for securing/encrypting communications within transport stacks," one of ordinary skill "would have understood or found obvious that [the] MMS Relay/Server's transport services stack would use TLS for securing the communication link between the MMS User Agent and the MMS Relay/Server." Pet. 11 (citing Ex. 1003 ¶ 114). According to Petitioner, one of ordinary skill would also "have understood or found obvious that, in MMS environments, multiple MMS User Agents/terminals are in communication with the MMS Relay/Server, thereby maintaining a respective secure TLS-based link between each MMS User Agent and MMS Relay/Server." *Id.* (citing Ex. 1003 ¶¶ 115–116; Ex. 1036, 2–3, Fig. 1, 3; Ex. 1007, 23; Ex. 1017 ¶¶ 7–8, Fig. 1).

Petitioner's contentions are supported by the cited portions of TS-23.140. After consideration of the contentions and the evidence of record at this early stage, we determine that Petitioner has shown sufficiently that TS-23.140 discloses claim limitation [1a] for purposes of institution.

c) *[1b] each of the wireless end-user devices comprising multiple software components authorized to receive and process data from secure message link messages received via a device link agent on that device;*

Petitioner argues that TS-23.140 "renders obvious that each wireless end-user device (wireless/mobile devices/UEs) includes multiple software components (applications) authorized to receive and process data (application data) from secure message link messages received via a device link agent." Pet. 12 (citing Ex. 1003 ¶¶ 117–128).

More specifically, Petitioner asserts that TS-23.140 "describes using MMS to 'transport data specific to ***applications***' downloaded on a mobile phone/terminal, and such application-specific data transport occurs 'between two MMS User Agents or an MMS User Agent and an MMS VAS Application.'" Pet. 12 (citing Ex. 1004, 54–55). Thus, Petitioner contends, one of ordinary skill "would have understood or found obvious that each UE includes multiple software applications/components." *Id.* (citing Ex. 1003 ¶ 118; Ex. 1036, 2–4).

Petitioner further contends that one of ordinary skill would have "understood or found obvious that such applications are ***authorized*** to receive application data messages." Pet. 13 (citing Ex. 1003 ¶¶ 119–121). In support, Petitioner argues that each application "***need[s] to register with the appropriate MMS User Agent or MMS VAS Application***" to receive and process messages via MMS, and that, "[o]nce registered, a message

including application data for an intended application is delivered by the MMS Relay/Server to the registered/intended application (via MMS Relay/Server) upon determining that the MMS User Agent can support application data (i.e., has the capability to support application data transport) and the terminal includes the intended application." *Id.* at 12–13 (citing Ex. 1004, 30, 54–55).

Petitioner further contends that one of ordinary skill would have "understood or found obvious that application data received by a particular destination application would be processed by that application for displaying data or performing operations on that data." Pet. 13 (citing Ex. 1003 ¶ 122; Ex. 1004, 56). According to Petitioner, "[b]ecause this communication occurs between MMS User Agents and/or between MMS User Agent and MMS VAS Application, and via MMS Relay/Server," as discussed with respect to limitation [1a], one of ordinary skill "would have understood that the messages including application data are received via MMS User Agent (device link agent) on the particular terminal/device." *Id.* (citing Ex. 1003 ¶ 123; Ex. 1004, 54–55). And, Petitioner argues, "[b]ecause a secure message link enables communication of messages between MMS Relay/Server and MMS User Agent," as discussed with respect to limitation [1a], one of ordinary skill "would have understood that the messages including the application data are 'secure message link messages.'" *Id.* at 13–14 (citing Ex. 1003 ¶ 125).

Finally, Petitioner argues that one of ordinary skill "would have also found obvious that the above-described allocation data delivery to an application would be performed for multiple applications resident on a mobile terminal that seek to send/receive application data via MMS (i.e.,

from MMS Relay/Server and via MMS User Agent)." Pet. 14 (citing Ex. 1003 ¶¶ 125–128; Ex. 1004, 54–55; Ex. 1036, 3–4).

Petitioner's contentions are supported by the cited portions of TS-23.140. After consideration of the contentions and the evidence of record at this early stage, we determine that Petitioner has shown sufficiently that TS-23.140 discloses claim limitation [1b] for purposes of institution.

d) [1c1] an interface to a network to receive network element messages from a plurality of network elements,

Petitioner argues that TS-23.140 "renders obvious an interface (interfaces including MM1, MM3, MM7) to a network to receive network element messages (messages including application data and addressing data) from network elements (other MMS User Agents/UEs, MMS VAS Applications)." Pet. 14 (citing Ex. 1003 ¶¶ 129–135).

Specifically, Petitioner argues that TS-23.140's MMS network environment shown in Figure 2 "includes '***a collection of MMS-specific network elements***' and enables communications between these elements (MMS User Agents, MMS Server/Relay, MMS VAS Applications, and external server(s)) over various networks." Pet. 15 (citing Ex. 1004, 17, Fig. 2; Ex. 1003 ¶¶ 129–130). Petitioner asserts that, as explained for limitations [1a] and [1b], the "MMS Relay/Server receives messages from network element(s) (i.e., network element messages)," such as "MMS User Agents and MMS VAS Applications." *Id.* (citing Ex. 1003 ¶ 131).

Petitioner also argues that TS-23.140 shows various "interfaces" that "facilitate network communication of messages (i.e., network element messages) between MMS User Agents, MMS VAS Applications, and MMS Relay/Server, using MM1, MM2, MM7, and MM4 interfaces," as shown in Petitioner's annotated version of Figure 2, reproduced below.

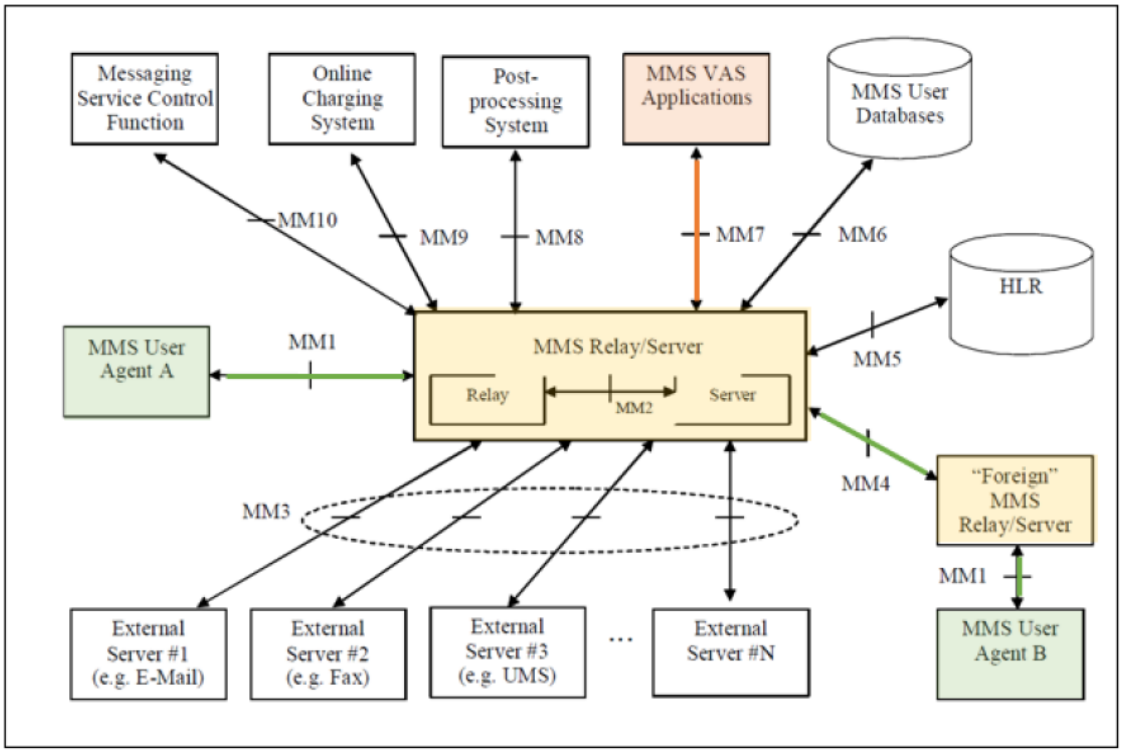

Petitioner's annotated version of Figure 2 of TS-23.140 highlighting the MMS Relay/Server and "Foreign" MMS Relay/Server in yellow, the MMS User Agent A and MMS User Agent B in green, the MMS VAS Applications in pink, and also highlighting interfaces MM1, MM4, and MM7. Pet. 16 (citing Ex. 1004, Fig. 2).

In the annotated Figure 2 above, Petitioner argues that the MM1 interface is the "reference point between the MMS User Agent and the MMS Relay/Server," the MM4 interface is the "reference point between the MMS Relay/Server and another MMS Relay/Server," and the MM7 interface is "the reference point between the MMS Relay/Server and MMS VAS Applications." Pet. 16 (citing Ex. 1004, 23–24; Ex. 1003 ¶¶ 132–133). According to Petitioner, these interfaces "are interfaces to various networks, including 2G/3G mobile networks, and IP/internet networks." *Id.* (citing Ex. 1003 ¶ 134).

Finally, Petitioner argues that, as explained for limitation [1b], "applications registered with MMS User Agents/VAS applications transmit application data to other applications (corresponding to other MMS user agents and VAS applications) via the MMS Relay/Server." Pet. 17 (citing Ex. 1004, 54–55; Ex. 1003 ¶ 135).

Petitioner's contentions are supported by the cited portions of TS-23.140. After consideration of the contentions and the evidence of record at this early stage, we determine that Petitioner has shown sufficiently that TS-23.140 discloses claim limitation [1c1] for purposes of institution.

e) [1c2] the received network element messages comprising respective message content and requests for delivery of the respective message content to respective wireless end-user devices, the respective message content including data for, and an identification of, a respective one of the authorized software components; and

Petitioner argues that TS-23.140 "renders obvious that the received network element messages (messages from applications registered with MMS User Agent/MMS VAS Applications) comprise respective message content, including data (application and control data) and identification of a respective one of the authorized software components (registered application(s)), and requests for delivery of the respective message content to respective wireless end-user devices." Pet. 17 (citing Ex. 1003 ¶¶ 137–144).

More specifically, Petitioner argues that, as described with respect to limitations [1a] and [1b], the "MMS is used to transport application data from one device (terminal, server) and its associated agent (MMS User Agent, MMS VAS Application(s)) to another device and its associated agent (MMS User Agent, MMS VAS Application(s))." Pet. 17 (citing Ex. 1004,

54–55; Ex. 1003 ¶ 138). Petitioner asserts that "[t]his application data transmission occurs upon an application 'trigger[ing]' the MMS User Agent or MMS VAS Application to send a message—including application data and/or 'control information' along with a destination 'application identifier'—to a destination application." *Id.* at 17–18 (citing Ex. 1004, 14, 54–56; Ex. 1003 ¶¶ 139–140). According to Petitioner, "the MMS User Agent/VAS Application coordinates message transmission." *Id.* The MMS Relay/Server, Petitioner contends, "receives this message and passes '***on the destination application identifier***' and 'application data' to MMS User Agent." *Id.*

Petitioner argues that "[t]he recipient/destination application would be an authorized/registered application" because "applications intending to send/receive application data 'need to register with the appropriate MMS User Agent' using their 'application identification value.'" Pet. 18 (citing Ex. 1004, 55–56; Ex. 1003 ¶¶ 141–143). Then, "upon message receipt," Petitioner contends, "the recipient application would be identified by MMS User Agent using its identification value as being resident on the device before the message is transmitted to this application." *Id.*

Petitioner further argues that, "[b]ecause messages are sent by an originating MMS User Agent to the MMS Relay/Server for delivery to an MMS User Agent with which the destination application is registered," one of ordinary skill "would have understood or found obvious that the transmitted/received message comprises a request for delivery of the respective message content to a respective wireless end-user device (including the destination application(s) resident on that device)." Pet. 18–

19 (citing Ex. 1003 ¶¶ 141–143; Ex. 1004, 28–29, 54–55, Fig. 6; Ex. 1036, 2–4).

Petitioner's contentions are supported by the cited portions of TS-23.140. After consideration of the contentions and the evidence of record at this early stage, we determine that Petitioner has shown sufficiently that TS-23.140 discloses claim limitation [1c2] for purposes of institution.

f) [1d1] a message buffer system including a memory and logic, [1d2] the memory to buffer content from the received network element messages for which delivery is requested to a given one of the wireless end-user devices,

Petitioner argues that TS-23.140 "renders obvious a message buffer system including a memory that buffers content from received network element messages (message store storing the received message), for which delivery is requested to a given one of the wireless end-user devices (application running on a terminal/UE associated with the recipient MMS User Agent)." Pet. 19 (citing Ex. 1003 ¶¶ 145–152).

More specifically, Petitioner argues that, as described for limitations [1c1] and [1c2], "network element messages are received from network element(s) by the MMS Relay/Server, and delivery of these messages is requested to application(s) resident on a terminal/UE (and its associated MMS User Agent)." *Id.* at 19–20 (citing Ex. 1003 ¶ 146). Petitioner also argues that the "MMS Relay/Server 'stores and handl[es]' '***incoming and outgoing messages***' and handles message transfer 'between different messaging systems,'" as shown in Petitioner's annotated version of a portion of TS-23.140's Figure 2, reproduced below.

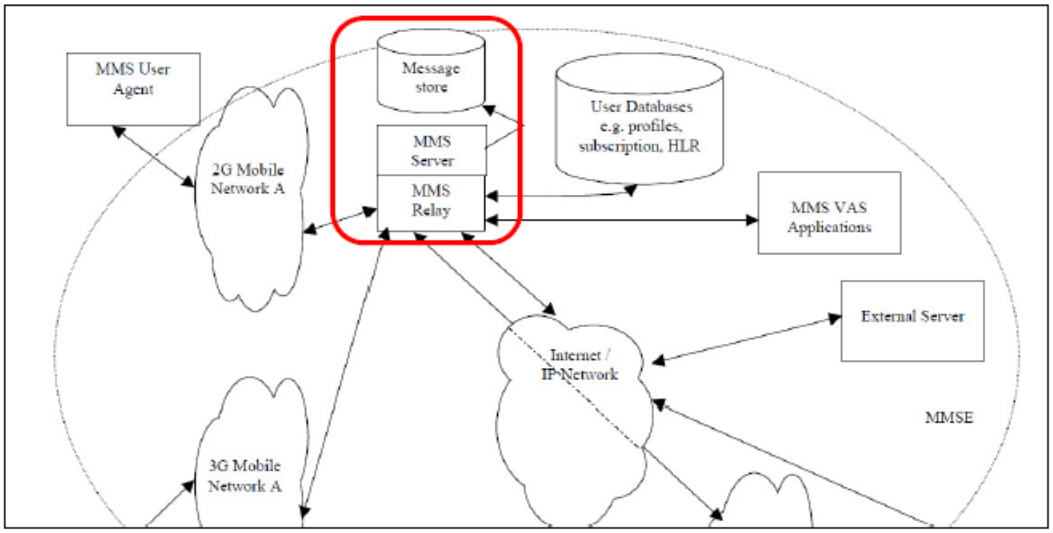

Petitioner's annotated version of Figure 2 of TS-23.140 highlighting the Message store and MMS Server/Relay. Pet. 20 (citing Ex. 1004, 17, Fig. 2).

As shown in Petitioner's annotated version of TS-23.140's Figure 2, MMS Server/Relay communicates with various systems and is coupled to the Message store. Pet. 20 (citing Ex. 1004, 17, 21, Fig. 2; Ex. 1003 ¶¶ 147–149).

Petitioner also argues that, "[u]pon receiving a message, the originator MMS Relay Server '***retain[s] the MM until the earliest desired time of delivery***'" and "the recipient MMS Relay/Server (which can be the same as the originator server) '***store[s] the MM at least until***' 'the associated time of expiry is reached, the MM is delivered, or the recipient MMS User Agent requests the MM to be routed forward or the MM is rejected.'" Pet. 20–21 (citing Ex. 1004, 26–28). Additionally, according to Petitioner, "[m]essages can be 'persistent[ly] stored' in a 'Persistent Network-Based Storage' (MMBox) associated with 'the MMS Relay/Server.'" *Id.* at 21 (citing Ex. 1004, 21–22, 26–28; Ex. 1003 ¶¶ 150–151). Finally, Petitioner contends that, as discussed later for limitations [1d3] and [1d4], the "MMS

Relay/Server includes a memory buffer system including logic for delivering messages upon one or more message delivery triggers occurring." *Id.* (citing Ex. 1003 ¶¶ 151–152).

Petitioner's contentions are supported by the cited portions of TS-23.140. After consideration of the contentions and the evidence of record at this early stage, we determine that Petitioner has shown sufficiently that TS-23.140 discloses claim limitations [1d1] and [1d2] for purposes of institution.

> *g) [1d3] the logic to determine when one of a plurality of message delivery triggers for the given one of the wireless end-user devices has occurred, wherein for at least some of the received network element messages, the receipt of such a message by the message buffer system is not a message delivery trigger, and for at least one of the message delivery triggers, the trigger is the occurrence of an asynchronous event with time-critical messaging needs, and*

Petitioner argues that TS-23.140 "renders obvious multiple message delivery triggers for transmitting the stored message data to an MMS User Agent for a UE that includes the destination application." Pet. 21 (citing Ex. 1003 ¶¶ 153–160). "For example," Petitioner asserts, "the message is not delivered by the MMS Relay/Server to a MMS User Agent/UE-terminal (resident on a UE/terminal) until one or more of the following triggers occur":

- The MMS Relay/Server has sent a notification to the recipient User Agent (Ex. 1004 § 7.1.2).
- The recipient MMS User Agent requests message retrieval upon MMS Relay/Server receiving the notification—e.g., within a message expiry period (Ex. 1004 § 7.1.2.1).
- The specified deferred delivery period (e.g., message

> expiry period) is met (e.g., where the ***recipient MMS User Agent requests deferred message delivery in the message retrieve request***) or until [the] message is retrieved/rejected (Ex. 1004 § 7.1.2.1).
>
> - When recipient MMS User Agent becomes available/reachable (e.g., moves into coverage, switches MMS User Agent on) or until [the] message expires (Ex. 1004 § 7.1.3).
> - The message conforms to the message retrieval request's "size restriction" (Ex. 1004 § 7.1.3).

Pet. 21–22 (citing Ex. 1003 ¶¶ 155–156).

Petitioner argues that, "[b]ecause MMS Relay/Server does not deliver the message to the recipient MMS User Agent (for a particular user terminal) until the above condition(s)/trigger(s) are met," one of ordinary skill "would have understood or found obvious that the MMS Relay/Server includes logic that is configured to determine when one (or more) of these message delivery triggers for the particular terminal/end-user device has occurred and if so, delivering the messages." Pet. 22–23 (citing Ex. 1003 ¶ 156). And, Petitioner contends, "[g]iven the above-described message delivery triggers," one of ordinary skill "would have found obvious that message receipt alone would not trigger message delivery, particularly considering the other condition(s)/trigger(s) that would be implemented (per above) and would be satisfied before message(s) is/are delivered." *Id.* at 23 (citing Ex. 1003 ¶ 157).

Finally, Petitioner argues, one of ordinary skill "would have understood that MMS User Agent can request delivery of the message received/stored by the MMS Relay/Server," and "would have found obvious (per the above disclosures) for such requested delivery to be based on user request." Pet. 23 (citing Ex. 1004, 20, 28–29, 69; Ex. 1003 ¶¶ 158–160).

Petitioner further contends that, according to the '192 patent specification, this requested delivery based on user request "constitutes a message delivery trigger that is 'an asynchronous event with time-critical messaging needs.'" *Id.* (citing Ex. 1001, 38:50–63; Ex. 1003 ¶¶ 158–160).

Petitioner's contentions are supported by the cited portions of TS-23.140. After consideration of the contentions and the evidence of record at this early stage, we determine that Petitioner has shown sufficiently that TS-23.140 discloses claim limitation [1d3] for purposes of institution.

> *h) [1d4] upon determining that one of the message delivery triggers has occurred, the logic further to supply one or more messages comprising the buffered content to the transport services stack for delivery on the secure message link maintained between the transport services stack and a device link agent on the given one of the wireless end-user devices.*

Petitioner argues that TS-23.140 "renders obvious that, upon determining that message delivery trigger(s) has/have occurred, the message buffer system includes logic for supplying one or more messages comprising the buffered content (stored message in the message store or MMSBox) to the transport services stack for delivery on the secure message link maintained between the transport services stack and a device link agent (MMS User Agent) on the given one of the wireless end-user devices." Pet. 23–24 (citing Ex. 1003 ¶¶ 161–165).

More specifically, Petitioner argues that, as described previously for limitations [1d1]–[1d3], the "MMS Relay/Server delivers stored messages (in MMBox or another temporary storage) upon the occurrence of one or more of the delivery triggers." Pet. 24 (citing Ex. 1003 ¶¶ 163–164). According to Petitioner, one of ordinary skill "would have found obvious that MMS Relay/Server includes logic for performing such message delivery

upon detecting occurrence of one or more of the delivery triggers." *Id.* Additionally, Petitioner contends, as described previously with respect to limitation [1a], "TS-23.140 discloses/renders obvious message delivery via MMS Relay/Server's transport services stack (MM1 Transfer Protocol) that maintains a secure message link (TLS-based link) to a device link agent (recipient MMS user agent) of a particular wireless end-user device (UE/terminal of recipient MMS User Agent)." *Id.* (citing Ex. 1004, 24, Fig. 4; Ex. 1010, 22; Ex. 1003 ¶¶ 165–166).

Petitioner's contentions are supported by the cited portions of TS-23.140. After consideration of the contentions and the evidence of record at this early stage, we determine that Petitioner has shown sufficiently that TS-23.140 discloses claim limitation [1d4] for purposes of institution.

i) Summary for Claim 1

For the foregoing reasons, Petitioner's cited evidence and reasoning demonstrates a reasonable likelihood that Petitioner would prevail in its contentions regarding claim 1.

3. Claims 5–7, 9, 11–13, and 15

Petitioner contends that independent claim 15 is unpatentable over TS-23.140 for the same reasons as independent claim 1. Pet. 6–24. Petitioner also argues that dependent claims 5–7, 9, and 11–13 are unpatentable over TS–23.140. Pet. 46–60. As noted above, Patent Owner did not submit a preliminary response. Based on the evidence of record, we determine that Petitioner has demonstrated a reasonable likelihood that claims 5–7, 9, 11–13, and 15 are unpatentable over TS-23.140.

E. Grounds 2–4: Obviousness of Claims 2–4 and 8 Based on TS-23.140 in View of Shen, Ellison, or Rakic

Petitioner contends that dependent claims 2–4 and 8 would have been obvious over TS-23.140 in view of Shen (Ground 2, claims 2 and 3), Ellison (Ground 3, claim 4), or Rakic (Ground 4, claim 8). Pet. 60–66. As noted above, Patent Owner did not submit a preliminary response. Based on the evidence of record, we determine that Petitioner has demonstrated a reasonable likelihood that claims 2–4 and 8 are unpatentable over the combinations set forth in Grounds 2–4.

F. Grounds 5–8: Obviousness of Claims 1–9, 11–13, and 15 Based on Houghton in view of Munson, Shen, Ellison, and/or Rakic

Petitioner contends that claims 1, 5–7, 9, 11–13, and 15 are unpatentable over Houghton in view of Munson (Ground 5). Pet. 49–85. Petitioner also argues that claims 2–4 and 8 would have been obvious over Houghton and Munson in view of Shen (Ground 6, claims 2 and 3), Ellison (Ground 7, claim 4), or Rakic (Ground 8, claim 8). Pet. 85–95. As noted above, Patent Owner did not submit a preliminary response. Based on the evidence of record, we determine that Petitioner has demonstrated a reasonable likelihood that claims 1–9, 11–13, and 15 are unpatentable over the combinations set forth in Grounds 5–8.

III. CONCLUSION

After considering the evidence and arguments presented in the current record, we determine that Petitioner has demonstrated a reasonable likelihood of success in proving that at least one of the challenged claims of the ’192 patent is unpatentable. We therefore institute trial on all challenged claims and grounds raised in the Petition.

At this stage of the proceeding, we have not made a final determination as to the patentability of any challenged claim or as to the construction of any claim term. Any final determination will be based on the record developed during trial.

IV. ORDER

In consideration of the foregoing, it is hereby:

ORDERED that, pursuant to 35 U.S.C. § 314(a), an *inter partes* review of claims 1–9, 11–13, and 15 of the '192 patent is instituted with respect to all grounds set forth in the Petition; and

FURTHER ORDERED that, pursuant to 35 U.S.C. § 314(c) and 37 C.F.R. § 42.4(b), *inter partes* review of the '192 patent shall commence on the entry date of this Order, and notice is hereby given of the institution of a trial.

For PETITIONER:

W. Karl Renner
Jeremy Monaldo
Karan Jhurani
FISH & RICHARDSON P.C.
axf-ptab@fr.com
jjm@fr.com
jhurani@fr.com

For PATENT OWNER:

Reza Mirzaie
Dale Chang
Amy Hayden
James Milkey
Neil Rubin
Philip Wang
RUSS, AUGUST & KABAT
rmirzaie@raklaw.com
dchang@raklaw.com
ahayden@raklaw.com
jmilkey@raklaw.com
nrubin@raklaw.com
pwang@raklaw.com

EXHIBIT 10

Trials@uspto.gov
571-272-7822

Paper 27
Entered: May 13, 2025

UNITED STATES PATENT AND TRADEMARK OFFICE

BEFORE THE PATENT TRIAL AND APPEAL BOARD

SAMSUNG ELECTRONICS CO., LTD.,
Petitioner,

v.

HEADWATER RESEARCH LLC,
Patent Owner.

IPR2024-00010
Patent 9,615,192 B2

Before GARTH D. BAER, STEPHEN E. BELISLE, and RUSSELL E. CASS, *Administrative Patent Judges*.

CASS, *Administrative Patent Judge*.

TERMINATION
Granting Joint Motion to Terminate
After Institution of Trial and
Granting Joint Request to Treat Settlement Agreement
as Business Confidential Information
35 U.S.C. § 317; 37 C.F.R. § 42.74

I. INTRODUCTION

With Board authorization, Samsung Electronics Co., Ltd. ("Petitioner") and Headwater Research LLC ("Patent Owner") filed a Joint Motion to Terminate the above-identified proceeding ("Joint Motion"). Paper 25. The parties also filed a Settlement Agreement (Exhibit 1047) and a Joint Request that we treat the Settlement Agreement as business confidential information and maintain it separate from the publicly available file of U.S. Patent No. 9,615,192 ("the '192 patent") (Paper 26, "Joint Request").

II. DISCUSSION

In the Joint Motion, Petitioner and Patent Owner represent that they have reached a settlement as to all disputes in this proceeding and seek termination of the above-identified proceeding. Joint Motion 1–2. The parties also represent that the filed copy of the Settlement Agreement is a "true copy" of the agreement between the parties related to this proceeding and the '192 patent, and that "[n]o other agreements, written or oral, exist between or among" them. *Id.* at 2.

The Board generally expects that a case "will terminate after the filing of a settlement agreement, unless the Board has already decided the merits." Office Patent Trial Practice Guide, 77 Fed. Reg. 48,756, 48,768 (Aug. 14, 2012); *see* 35 U.S.C. § 317(a); 37 C.F.R. § 42.72. We instituted trial in the above-identified proceeding on May 23, 2024. Paper 7. We have not yet decided the merits of the proceeding, and a final written decision has not been entered. Notwithstanding that the proceeding has moved beyond the preliminary stage, Petitioner and Patent Owner have shown adequately that

termination of the proceeding is appropriate. *See* 35 U.S.C. § 317(a); 37 C.F.R. §§ 42.5(a), 42.72.

The parties also request that the Settlement Agreement be treated as business confidential information and be kept separate from the publicly available file of Patent 9,615,192. Joint Request 1–2. After reviewing the Settlement Agreement, we find that it contains confidential business information. We determine that good cause exists to treat the Settlement Agreement as business confidential information pursuant to 35 U.S.C. § 317(b) and 37 C.F.R. § 42.74(c).

This Order does not constitute a final written decision pursuant to 35 U.S.C. § 318(a).

III. ORDER

Accordingly, for the reasons discussed above, it is:

ORDERED that the Joint Motion is *granted*, and IPR2024-00010 is *terminated*, pursuant to 35 U.S.C. § 317(a) and 37 C.F.R. § 42.72; and

FURTHER ORDERED that the Joint Request is *granted*, and the Settlement Agreement (Exhibit 1047) shall be kept separate from the publicly available file of U.S. Patent No. 9,615,192 B2, and made available only to Federal Government agencies on written request, or to any person on a showing of good cause, pursuant to 35 U.S.C. § 317(b) and 37 C.F.R. § 42.74(c).

IPR2024-00010
Patent 9,615,192 B2

For PETITIONER:

W. Karl Renner
Jeremy Monaldo
Karan Jhurani
FISH & RICHARDSON P.C.
axf-ptab@fr.com
jjm@fr.com
jhurani@fr.com

For PATENT OWNER:

Reza Mirzaie
Dale Chang
Amy Hayden
James Milkey
Neil Rubin
Philip Wang
RUSS, AUGUST & KABAT
rmirzaie@raklaw.com
dchang@raklaw.com
ahayden@raklaw.com
jmilkey@raklaw.com
nrubin@raklaw.com
pwang@raklaw.com

EXHIBIT 11

Trials@uspto.gov
571-272-7822

Paper 28
Date: July 23, 2025

UNITED STATES PATENT AND TRADEMARK OFFICE

BEFORE THE PATENT TRIAL AND APPEAL BOARD

SAMSUNG ELECTRONICS CO. LTD., GOOGLE LLC,
and SAMSUNG ELECTRONICS AMERICA, INC.,
Petitioner,

v.

HEADWATER RESEARCH LLC,
Patent Owner.

IPR2024-00341
Patent 8,406,733 B2

Before HYUN J. JUNG, GARTH D. BAER, and RUSSELL E. CASS, *Administrative Patent Judges.*

JUNG, *Administrative Patent Judge*.

JUDGMENT
Final Written Decision
Determining All Challenged Claims Unpatentable
35 U.S.C. § 318(a)

I. INTRODUCTION

We have jurisdiction under 35 U.S.C. § 6 (2024). This Final Written Decision is issued pursuant to 35 U.S.C. § 318(a) and 37 C.F.R. § 42.73

(2024). For the reasons that follow, we determine that Samsung Electronics Co. Ltd., Google LLC, and Samsung Electronics America, Inc. (collectively, "Petitioner") have shown by a preponderance of the evidence that claims 1–17, 19, 21–27, 29, and 30 of U.S. Patent No. 8,406,733 B2 (Ex. 1001, "the '733 patent") are unpatentable.

A. Background and Summary

Petitioner filed a Petition (Paper 4, "Pet.") requesting institution of an *inter partes* review of claims 1–17, 19, 21–27, 29, and 30 of the '733 patent. Headwater Research LLC ("Patent Owner") did not file a Preliminary Response. Pursuant to 35 U.S.C. § 314, we instituted an *inter partes* review of claims 1–17, 19, 21–27, 29, and 30 of the '733 patent on all presented challenges. Paper 12 ("Inst. Dec."), 2, 21.

After institution, Patent Owner filed a Response (Paper 17, "PO Resp."), to which Petitioner filed a Reply (Paper 19, "Pet. Reply"), and Patent Owner thereafter filed a Sur-reply (Paper 21, "PO Sur-reply"). An oral hearing in this proceeding was held on May 5, 2025; a transcript of the hearing is included in the record.

B. Real Parties in Interest

Petitioner identifies Samsung Electronics Co. Ltd., Google LLC, and Samsung Electronics America, Inc. as real parties in interest. Pet. 79. Patent Owner identifies itself as the real party in interest. Paper 6, 2.

C. Related Matters

The parties identify *Headwater Research LLC v. Samsung Electronics Co., Ltd.*, 2:23-cv-00103 (E.D. Tex.) as a related matter. Pet. 79; Paper 6, 2. Petitioner states that the parties "are also involved in case nos. 2:22-cv-00422 and 2:22-cv-00467, also in E.D. Tex." Pet. 79. Patent Owner further identifies as a related matter IPR2024-00342. Paper 6, 2. A related patent is challenged in IPR2024-00010.

D. The '733 Patent (Ex. 1001)

The '733 patent issued on March 26, 2013 from an application filed on May 1, 2012 that is a continuation of an application filed on March 2, 2009 and claims priority to four provisional applications, the earliest of which was filed on January 28, 2009. Ex. 1001, codes (22), (45), (60), (63), 1:7–21.

Figure 16 of the '733 is below reproduced.

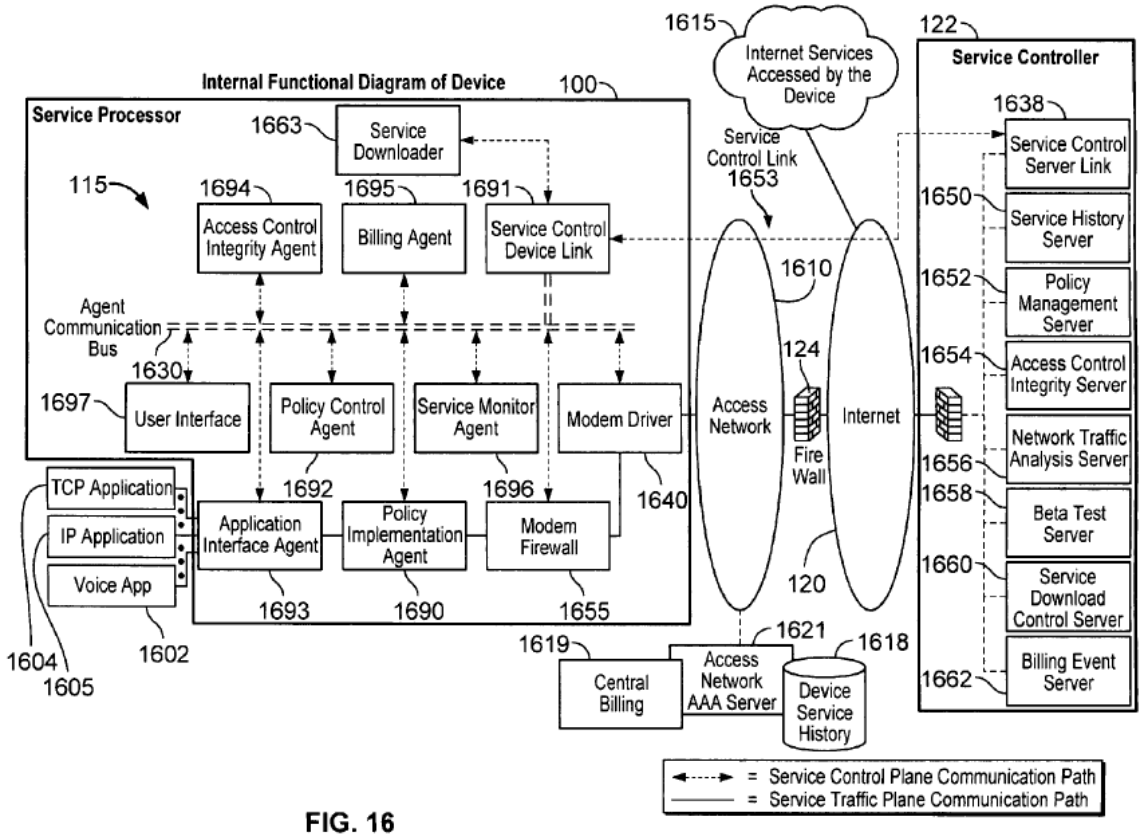

FIG. 16

Figure 16 shows "a functional diagram illustrating a device based service processor and a service controller." Ex. 1001, 2:43–44. The '733 patent describes "[d]evices and methods for receiving control-plane communications from a network element over a secure service control link." *Id.* at code (57).

> The network element includes a service control server link element that is communicatively coupled to a plurality of servers. The device includes a plurality of device agents

> communicatively coupled to a service control device link agent through an agent communication bus. The service control device link agent receives an encrypted agent message from the service control server link element over the secure service control link, uses an encryption key to obtain a decrypted agent message comprising a particular agent identifier and message content for delivery to the particular device agent, and, based on the particular agent identifier, delivers the message content to the particular device agent over the agent communication bus.

Id.

E. Illustrative Claim

The '733 patent includes 30 claims, of which Petitioner challenges claims 1–17, 19, 21–27, 29, and 30. Of the challenged claims, claims 1 and 30 are independent, and reproduced below is claim 1.

> 1. An end-user device comprising:
>
> a modem for enabling communication with a network system over a service control link provided by the network system over a wireless access network, the service control link secured by an encryption protocol and configured to support control-plane communications between the network system and a service control device link agent on the end-user device;
>
> a plurality of device agents communicatively coupled to the service control device link agent through an agent communication bus, each of the plurality of device agents identifiable by an associated device agent identifier; and
>
> memory configured to store an encryption key, the encryption key shared between the service control device link agent and a service control server link element of the network system;
>
> wherein the service control device link agent is configured to:
>
> receive, over the service control link, an encrypted agent message from the service control server link element,
>
> using the encryption key, obtain a decrypted agent message, the decrypted agent message comprising a particular agent identifier and message content for delivery to a particular device agent of the plurality of device agents, the particular agent identifier identifying the particular device agent, the message content from a particular server of a plurality of servers

> communicatively coupled to the service control server link element, and
>
> based on the particular agent identifier, deliver the message content to the particular device agent over the agent communication bus.

Ex. 1001, 163:47–164:12.

F. Asserted Prior Art and Proffered Testimonial Evidence

Petitioner identifies the following references as prior art in the asserted ground of unpatentability:

Name	Reference	Exhibit
Ogawa	US 8,195,961 B2, issued June 5, 2012	1005
TS-23.140	3GPP TS 23.140 v6.9.0 (2005-03); 3rd Generation Partnership Project; Technical Specification Group Terminals; Multimedia Messaging Service (MMS); Functional Description; Stage 2 (Release 6)	1004

Petitioner contends that TS-23.140 is prior art under § 102(b) and Ogawa is prior art under §§ 102(a) and 102(e).[1] Pet. 1. Petitioner also provides a Declaration of Dr. Patrick G. Traynor. Ex. 1003. Patent Owner filed a deposition transcript for Dr. Traynor. Ex. 2003.

Petitioner further provides a Declaration of Freidhelm Rodermund (Ex. 1024) to opine on the authenticity and date of accessibility for TS-23.140 and a Declaration of June Ann Munford (Ex. 1052) to support that the excerpts from Operating System Concepts (Ex. 1045) are true and correct copies.

[1] The relevant sections of the Leahy-Smith America Invents Act ("AIA"), Pub. L. No. 112–29, 125 Stat. 284 (Sept. 16, 2011), took effect on March 16, 2013. Because the '733 patent issued from an application filed before that date, our citations to 35 U.S.C. §§ 102 and 103 in this Decision are to their pre-AIA versions. *See also* Pet. 5 (stating that "[t]he '733 Patent claims priority to a provisional application filed January 28, 2009 ('Critical Date')").

Patent Owner provides a Declaration of Dr. Michael C. Brogioli. Ex. 2001. Petitioner filed a deposition transcript for Dr. Brogioli from IPR2024-00010. Ex. 1051.

G. Asserted Ground

Petitioner asserts that claims 1–17, 19, 21–27, 29, and 30 are unpatentable on the following ground:

Claims Challenged	35 U.S.C. §	References/Basis
1–17, 19, 21–27, 29, 30	103(a)	TS-23.140, Ogawa

Pet. 1.

II. ANALYSIS

A. Legal Standards

"In an [*inter partes* review], the petitioner has the burden from the onset to show with particularity why the patent [claim] it challenges is unpatentable." *Harmonic Inc. v. Avid Tech., Inc.*, 815 F.3d 1356, 1363 (Fed. Cir. 2016). This burden of persuasion never shifts to Patent Owner. *Dynamic Drinkware, LLC v. Nat'l Graphics, Inc.*, 800 F.3d 1375, 1378 (Fed. Cir. 2015). To prevail in an *inter partes* review, the petitioner must support its challenges by a preponderance of the evidence. 35 U.S.C. § 316(e); 37 C.F.R. § 42.1(d).

Petitioner contends that the challenged claims of the '733 patent are unpatentable under § 103. Pet. 1. A claim is unpatentable under § 103 if the differences between the claimed subject matter and the prior art are such that the subject matter, as a whole, would have been obvious at the time the invention was made to a person having ordinary skill in the art to which said subject matter pertains. *KSR Int'l Co. v. Teleflex Inc.*, 550 U.S. 398, 406 (2007). The question of obviousness is resolved on the basis of underlying factual determinations, including: (1) the scope and content of the prior art;

(2) any differences between the claimed subject matter and the prior art; (3) the level of skill in the art; and (4) where in evidence, so-called secondary considerations. *Graham v. John Deere Co.*, 383 U.S. 1, 17–18 (1966). When evaluating a combination of teachings, we must also "determine whether there was an apparent reason to combine the known elements in the fashion claimed by the patent at issue." *KSR*, 550 U.S. at 418 (citing *In re Kahn*, 441 F.3d 977, 988 (Fed. Cir. 2006)).

B. Level of Ordinary Skill in the Art

Petitioner proposes that a person of ordinary skill in the art "would have had (1) at least a bachelor's degree in computer science, electrical engineering, or a related field, and (2) 3–5 years of experience in services and application implementation in communication networks," and that "[a]dditional graduate education could substitute for professional experience, and vice versa." Pet. 2 (citing Ex. 1003 ¶¶ 1–15, 21, 22). We preliminarily adopted Petitioner's proposal. Inst. Dec. 7.

Patent Owner responds that Petitioner's proposed level of ordinary skill in the art is "too vague," because, by its own words, three years of experience is sufficient but asserts "3–5 years of experience" and the alternative that "'[a]dditional graduate education could substitute for professional experience, and vice versa' also lacks clarity." PO Resp. 5 (citing Pet. 2).

For purposes of its Response, "Patent Owner agrees that a person having a bachelor's degree in computer science, electrical engineering, or a related field, plus at least three years of experience in services and application implementation in communication networks qualifies as a [person of ordinary skill in the art]" and that "three years of additional experience can be in either a professional setting or a research setting." PO Resp. 5 (citing Ex. 2001 ¶¶ 29–31).

Petitioner replies that its "analysis is unchanged," under Patent Owner's proposed level of ordinary skill, which encompasses Petitioner's proposal. Pet. Reply 4 (citing Pet. 2; PO Resp. 5).

Based on the full record, we find that Patent Owner's proposed level of ordinary skill in the art is consistent with the '733 patent and the asserted prior art. PO Resp. 5 (citing Ex. 2001 ¶¶ 29–31). We agree with Petitioner that Patent Owner's proposal is encompassed by Petitioner's proposed level of ordinary skill in the art. Pet. Reply 4. Our analysis below would not change, if we used Petitioner's proposal.

C. Claim Construction

In an *inter partes* review, the claims are construed:

> using the same claim construction standard that would be used to construe the claim in a civil action under 35 U.S.C. [§] 282(b), including construing the claim in accordance with the ordinary and customary meaning of such claim as understood by one of ordinary skill in the art and the prosecution history pertaining to the patent.

37 C.F.R. § 42.100(b); *see Phillips v. AWH Corp.*, 415 F.3d 1303, 1312–13 (Fed. Cir. 2005) (en banc).

Petitioner states that "[c]laim terms are construed herein using the standard used in civil actions," and Petitioner is "not conceding that each Challenged Claim satisfies all statutory requirements, nor waiving arguments that can only be raised in district court." Pet. 2.

In asserting how its proposed combination would have included the limitations of claims 1 and 30, Petitioner argues what certain claim terms would have encompassed or would have been understood to mean based on the Specification of the '733 patent. *See, e.g.*, Pet. 20 (arguing that "end-user device" includes "networked" devices) (citing Ex. 1001, 5:65–6:28, 6:49–56, 8:3–15. 8:60–9:15; Ex. 1003 ¶ 99), 20–21 (arguing that "modem" includes modems for 2G and 3G communications over a wireless access

network) (citing Ex. 1001, 12:61–13:32, 25:29–45, 27:38–44, 29:52–53, 33:59–65, 34:24–27; Ex. 1003 ¶ 100), 21 (arguing that "one or more servers performing one or more server functions would meet the claimed 'network system'") (citing Ex. 1001, 16:13–26, 17:8–11, 68:20–37, Figs. 16–20; Ex. 1003 ¶ 101), 23–24 (arguing that "service control link" "can provide an efficient and flexible control plane communication link" for controlling a service and would have been understood to be provided when implemented for communication) (citing Ex. 1002, 76, 99–100; Ex. 1003 ¶¶ 107, 108), 25 (arguing that "network element" is any element that is part of a network) (citing Ex. 1001, 23:46–54, Figs. 1–8; Ex. 1003 ¶ 113), 26 (arguing that "control-plane communications" would have been understood to include communications across a network for supervising and control of services delivered to a device) (citing Ex. 1001, 8:60–9:15, 9:23–24, 37:36–43, 68:19–28; Ex. 1003 ¶ 116), 27–28 (arguing that "service control device link agent" can be any component, possibly implemented in software, that performs some function for a service control device link) (citing Ex. 1001, 15:58–16:12, 37:43–62, 42:51–52, claim 26; Ex. 1003 ¶ 118), 29 (arguing that "device agent" includes software component and can be on a device) (citing Ex. 1001, 15:58–16:2, 42:51–52; Ex. 1003 ¶ 120; Ex. 1029, 12; Ex. 1021, 13–23; Ex. 1038, 17), 36–37 (arguing that "encrypted agent message" includes "an encrypted message sent to an agent") (citing Ex. 1003 ¶ 139), 38 (arguing that "decrypted agent message" includes "a message that was sent to an agent and then decrypted") (citing Ex. 1003 ¶ 142), 40 (arguing that "message content" includes multimedia messaging service control information and multimedia content) (citing Ex. 1003 ¶ 150).

As we did for institution, we apply Petitioner's understanding of the claim terms as above described for our analysis. Inst. Dec. 9.

"Patent Owner agrees that no formal claim construction is necessary, because all terms carry their plain and ordinary meaning." PO Resp. 5 (citing Pet. 1–2).

Based on the full record, we do not need to interpret expressly any claim term. *Realtime Data, LLC v. Iancu*, 912 F.3d 1368, 1375 (Fed. Cir. 2019) ("The Board is required to construe 'only those terms that . . . are in controversy, and only to the extent necessary to resolve the controversy.'") (quoting *Vivid Techs., Inc. v. Am. Sci. & Eng'g, Inc.*, 200 F.3d 795, 803 (Fed. Cir. 1999)).

D. Asserted Obviousness Based on TS-23.140 and Ogawa

1. TS-23.140 (Ex. 1004)

TS-23.140 "defines the stage 2 and stage 3 description of the non-realtime Multimedia Messaging Service, MMS." Ex. 1004, 10.[2] Figure 3 of TS-23.140 is below reproduced.

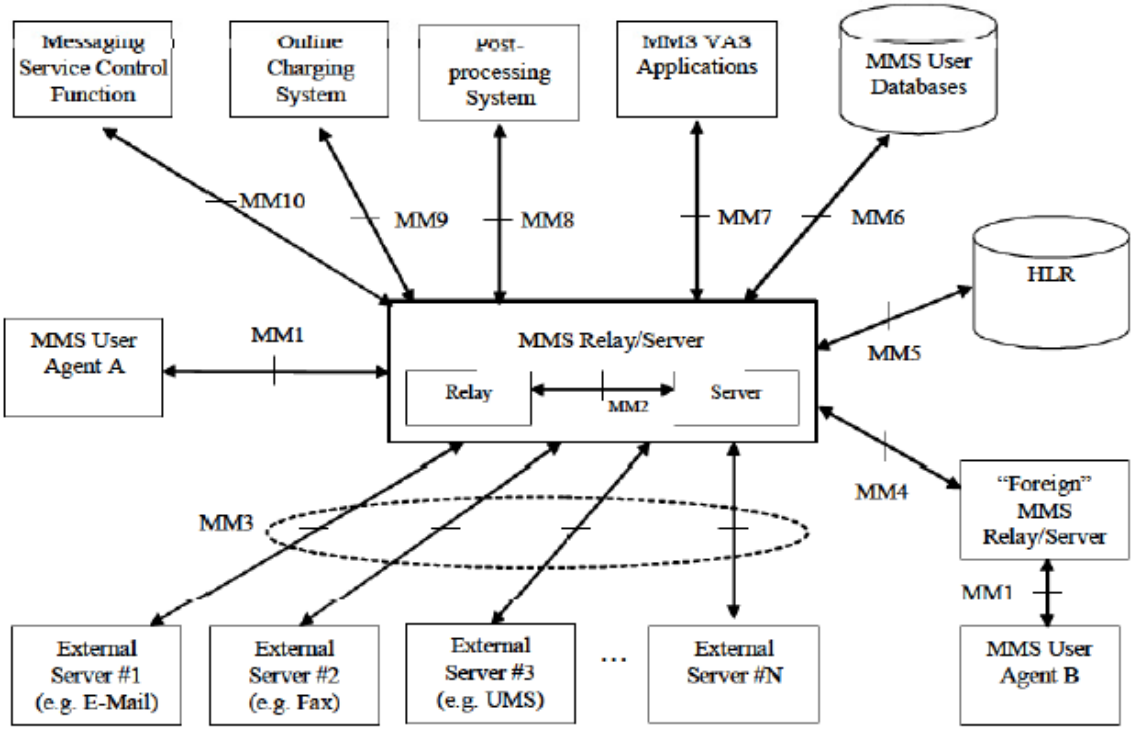

Figure 3: MMS Reference Architecture

"Figure 3 shows the MMS Reference Architecture." Ex. 1004, 24. TS-23.140 defines "MMS User Agent" as an "application residing on a UE ["User Equipment"] . . . or an external device that performs MMS-specific operations on a user's behalf and/or another application's behalf." *Id.* at 14. The MMS User Agent can provide application layer functionalities, such as "the decryption and encryption of an MM on end-user to end-user basis."

[2] We, like Petitioner, cite to page numbering at the top center of each page, not the exhibit page numbering.

Id. at 19; *see also id.* at 15 (listing "MM" as the abbreviation for "Multimedia Message"), 41 (stating "authentication mechanisms based on public/private key cryptography and certificates may also be used").

"The MMS Relay/Server is responsible for storage and handling of incoming and outgoing messages and for the transfer of messages between different messaging systems" (Ex. 1004, 17) and "for storage and notification, reports, and general handling of messages" (*id.* at 21). *See also id.* at 23–25 (describing further the MMS Relay/Server).

MMS VAS Applications are "[a]pplications providing Value Added Services (e.g. news service or weather forecasts) to MMS Users." Ex. 1004, 14; *see also id.* at 18, 23, 41 (describing further MMS VAS Applications). "MMS may also be used to transport data specific to applications." *Id.* at 54. "Abstract messages that are sent by an MMS User Agent or an MMS VAS Application on behalf of an originating application shall contain a destination application identifier." *Id.* at 55. "If the destination application resides on a receiving MMS User Agent, the MMS User Agent shall immediately route the received MMS information on to the destination application that is referred to from the destination application identifier." *Id.* at 56.

2. Ogawa (Ex. 1005)

Ogawa is "directed to encryption methodologies and a portable storage device for storing data thereto." Ex. 1005, 1:17–19. Ogawa describes a "data encryption system" and "associated methodology to compress[] and encrypt data based on a shared encryption key." *Id.* at 3:18–21. Components are "operably linked via an external wide area telecommunication network 4," such as a wide area network ("WAN") or the Internet. *Id.* at 3:44–54.

Ogawa's encryption "may be utilized to enhance security over networks to effectively tunnel data over the network 4," such as "conventional TCP/IP (Transmission Control Protocol/Internet Protocol) or UDP (User Datagram Protocol), encryption communication, such as IPsec (Internet Protocol Security) or SSL (Secure Socket Layer)." Ex. 1005, 3:61–4:4.

In one embodiment, "if a start instruction is issued by the client starting unit 31 at the client site 3, the shared key encrypted data will be received by the receive unit 32 from the database server 2 via network 4." Ex. 1005, 5:59–62; *see also id.* at 6:42–7:21 (describing Fig. 2 and the processing operations for distributing shared encryption keys). That "received shared key encrypted data will be decrypted using the shared encryption key 52 which was supplied to decryption unit 33 and beforehand stored on the removable storage 5." *Id.* at 5:62–65.

"Data that was expanded by the decompression unit 34 is re-encrypted by the encryption unit 35, using an inherent encryption key 53 that was stored on the removable storage 5." Ex. 1005, 6:1–3. "[E]ncryption key 53 is generated from an inherent identification code that was assigned during manufacturing and stored on the internal memory device of the removable storage 5." *Id.* at 6:4–7.

Figure 7 of Ogawa is below reproduced.

Figure 7

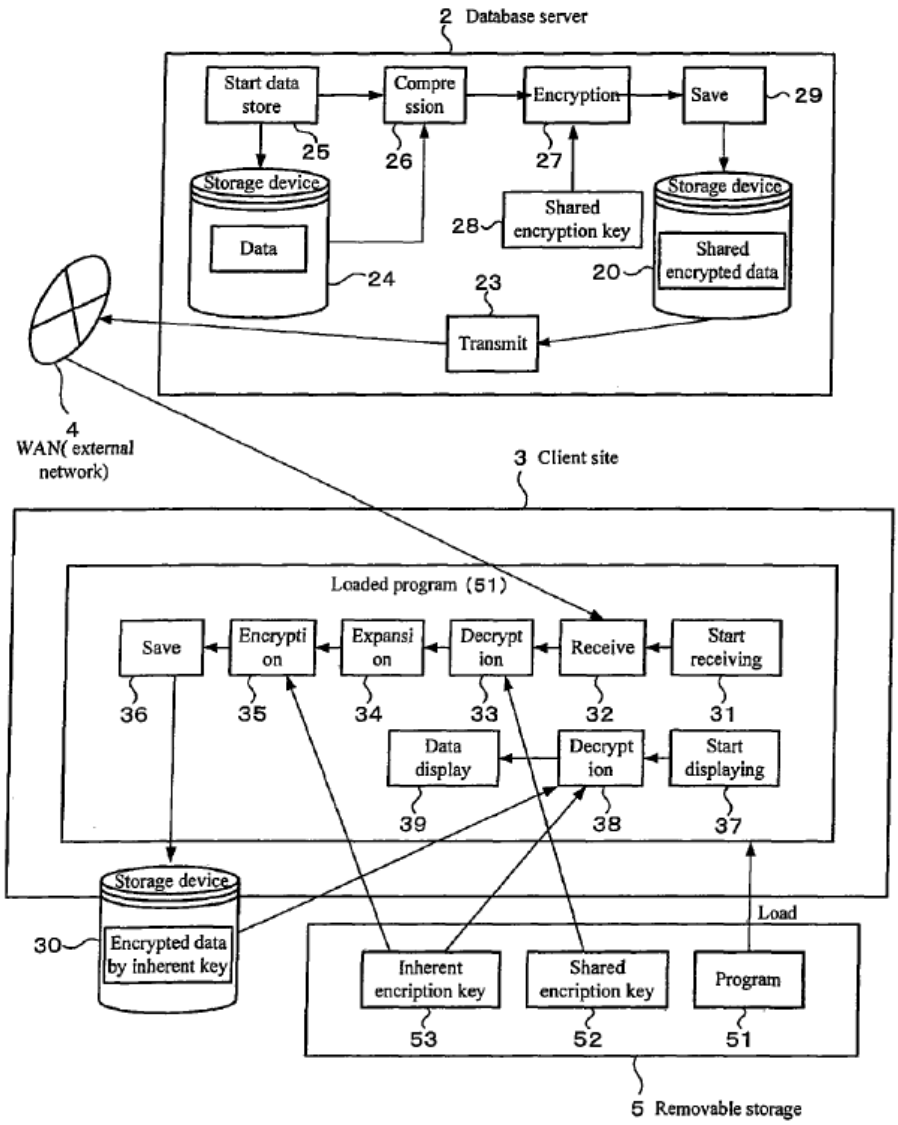

Figure 7 shows "a high level block diagram of an exemplary encryption methodology where the encryption takes place on the database serve[r]." Ex. 1005, 3:4–5. "[D]atabase server 2 is integrated with the function of a data input site 1[,] and the database server 2 and the client site 3 are connected through the external network 4." *Id.* at 9:16–20.

"When a start instruction is sent from the saving start unit 25, the compression unit 26 will compress the saved data in the storage device 24," and "[t]he compressed data is supplied to the encryption unit 27 and encrypted by the shared encryption key 28." Ex. 1005, 9:22–26. "[T]he share[d] key encrypted data are saved in the storage device 20." *Id.* at 9:26–27. "Data encrypted by the shared encryption key saved in the storage device 20 is sent to the network 4 through a sending unit 23 which is requested from client site 3." *Id.* at 9:31–33.

3. Independent Claim 1

a) "An end-user device comprising:"

Petitioner argues that, to the extent the preamble is limiting, the user device of TS-23.140 would have been understood to be "[a]n end-user device." Pet. 20 (citing Ex. 1003 ¶ 99; Ex. 1004, 14).

The relied-upon portion of TS-23.140 describes "MMS User Agent" to be an "application residing on a UE . . . or an external device that performs MMS-specific operations on a user's behalf and/or on another application's behalf." Ex. 1004, 14. We also credit Petitioner's testimonial evidence regarding the preamble because the cited portion of TS-23.140 supports it. Ex. 1003 ¶ 99; Ex. 1004, 14. Patent Owner does not provide a responsive argument regarding the preamble. *See* PO Resp.

Based on the full record before us, Petitioner persuades us, and we find, that the User Equipment of TS-23.140 teaches, suggests, or would have been understood to disclose, to the extent the preamble is limiting, "[a]n end-user device."

b) "a modem for enabling communication with a network system over a service control link provided by the network system over a wireless access network"

Petitioner argues that its proposed combination would have had a modem for communicating between an MMS Relay/Server and VAS

applications and the MM1 interface of TS-23.140 would have been implemented for communications and facilitating transmission of control information. Pet. 21–24 (citing Ex. 1003 ¶¶ 102–107, 109, 110; Ex. 1004, 14, 18, 23, 55–56, Fig. 3); *see also id.* at ii (labeling the limitation "1a").

A relied-upon portion of TS-23.140 shows an MMS User Agent communicating through interface MM1 with an MMS Relay/Server, MMS VAS Applications, MMS User Databases, and other components. Ex. 1004, Fig. 3; *see also* Pet. 22 (providing an annotated Fig. 3). The other-relied upon portions describe those components and sending and receiving messages between an MMS User Agent or MMS VAS Application and a destination application over wireless networks. Ex. 1004, 14, 18, 23, 55–56.

We credit Petitioner's testimonial evidence regarding the above-quoted limitation because the cited portions of TS-23.140 support it. Ex. 1003 ¶¶ 102–107, 109, 110; Ex. 1004, 14, 18, 23–25, 55–56, Figs. 2–4. Patent Owner does not provide a responsive argument regarding the recited modem. *See* PO Resp.

Based on the full record before us, Petitioner persuades us, and we find, that TS-23.140 teaches or suggests "communication with a network system over a service control link provided by the network system over a wireless access network." As discussed below in our analysis of Petitioner's proposed combination, Petitioner persuades us that one of ordinary skill in the art would have implemented TS-23.140 with a modem for such communication with a reasonable expectation of success.

c) "the service control link secured by an encryption protocol"

Petitioner argues that SSL or TCP Transport Layer Security ("TLS") would have been used to secure the interface between the MMS User Agent and MMS Relay/Server. Pet. 24–25 (citing Ex. 1001, 17:2–26, 87:62–88:7,

98:42–44; 99:26–29; 101:65–67; Ex. 1003 ¶¶ 111, 112); *see also id.* at ii (labeling the limitation "1a1").

We credit Petitioner's testimonial evidence that SSL/TLS would have been used to secure interface MM1 between the MMS User Agent and the MMS Relay/Server because the cited portions of the record support it. Ex. 1003 ¶¶ 111, 112; Ex. 1004, 24–25, Fig. 4; Ex. 1012, 21. Patent Owner does not provide a responsive argument regarding the above-quoted limitation. *See* PO Resp.

As discussed below in our analysis of Petitioner's proposed combination, based on the full record before us, Petitioner persuades us that SSL/TLS would have been used in TS-23.140 to secure the interface between MMS User Agent and MMS Relay/Server with a reasonable expectation of success.

d) "and configured to support control-plane communications between the network system and a service control device link agent on the end-user device"

Petitioner argues that interface MM1 between the MMS User Agent and MMS Relay/Server would have been understood to meet the above-quoted limitation because it facilitates transmitting control information. Pet. 25–28 (citing Ex. 1001, 8:60–9:15; Ex. 1003 ¶¶ 114, 115, 117–119; Ex. 1004, 14, 19, 21, 23–24, 30–31, 35–36, 55–56); *see also id.* at ii (labeling the limitation "1a2").

The relied-upon portions of TS-23.140 describe the MMS Relay/Server passing to a recipient MMS User Agent "application/implementation specific control information (Ex. 1004, 55–56) and delivering service based on a user device's capabilities" (*id.* at 19, 21, 30–31, 35–36). We credit Petitioner's testimonial evidence regarding the "control-plane communications" because the cited portions of TS-23.140

support it. Ex. 1003 ¶¶ 114, 115, 117; Ex. 1004, Ex. 1004, 14, 19, 21, 30–31, 35–36, 55–56).

We also credit Petitioner's testimonial evidence that such communications are between the MMS Relay/Server, part of a "network system," and the MMS User Agent, the asserted "service control device link agent." Ex. 1003 ¶¶ 118, 119. The cited portions of the record support the testimony. Ex. 1004, 14, 19, 23–24, 30–31, 35–36; Ex. 1029, 12. Patent Owner does not provide a responsive argument regarding the above-quoted limitation. *See* PO Resp.

Based on the full record before us, Petitioner persuades us, and we find, that TS-23.140 teaches or suggests that its MM1 interface between MMS Relay/Server and MMS User Agent is "configured to support control-plane communications," that its MMS Relay/Server is part of a "network system," and that its MMS User Agent is "a service control device link agent on the end-user device."

e) "a plurality of device agents communicatively coupled to the service control device link agent through an agent communication bus,"

Petitioner argues that TS-23.140's destination applications would have been understood to be device agents that are communicatively coupled to other applications through an agent communication bus, as the term is used in the '733 patent. Pet. 28–30 (citing Ex. 1001, 42:48–61; Ex. 1003 ¶¶ 121–124; Ex. 1004, 54–55, 56; Ex. 1038, 24); *see also id.* at ii (labeling the limitation "1b"). According to Petitioner, "MMS is 'used to transport data specific to applications' residing on the end-user device that are not the MMS User Agent," such as a "destination application." *Id.* at 29 (citing Ex. 1003 ¶ 121; Ex. 1004, 54–56). Petitioner also argues that the MMS User Agent would have been understood to be communicatively coupled to a device's other applications "through an agent communication bus," a term

that the '733 patent uses "to include a communication link that facilitates communications." *Id.* at 30 (citing Ex. 1001, 42:48–61; Ex. 1003 ¶¶ 123, 124; Ex. 1004, 54; Ex. 1038, 24).

(1) Patent Owner's Response

Patent Owner responds that Petitioner fails to show that TS-23.140 discloses "a plurality of device agents communicatively coupled to the service control device link agent through an agent communication bus." PO Resp. 6 (citing Pet. 28–31), 11–12. Patent Owner argues that Petitioner maps the destination applications to the "plurality of device agents" and the "MMS User Agent," an application on user equipment or an external device, to the "service control device link agent." *Id.* at 6–7 (citing Pet. 28–29; Ex. 1004, 14, 18).

According to Patent Owner, Petitioner's theory that it would have been understood that the MMS User Agent and destination applications interface through an agent communication bus is deficient "because the destination applications are disclosed as being ***part of*** the MMS User Agent in TS-23.140." PO Resp. 7. Patent Owner also argues that TS-23.140 does not disclose explicitly an "agent communication bus," as acknowledged by Petitioner. *Id.* at 7 (citing Pet. 30).

Patent Owner contends that one of ordinary skill in the art "would not have found it necessary or obvious to use a 'bus' for communications that occur internally ***within*** an application." PO Resp. 7 (citing Ex. 2001 ¶¶ 35–50). Patent Owner cites to the express disclosure of TS-23.140 and testimonial evidence to support that the destination applications reside on the MMS User Agent. *Id.* at 8 (citing Ex. 1004, 54; Ex. 2001 ¶¶ 38–48), 9 (citing Ex. 2001 ¶¶ 37–48), 11.

Patent Owner also cites to deposition testimony to assert that Petitioner's declarant understood that applications residing on another

application means that those applications are subapplications. PO Resp. 8 (citing Ex. 2003, 28:6–30:11). Patent Owner contends that the deposition testimony is inconsistent with statements in the declaration that the phrase "reside on" referred to the device. *Id.* at 8–9, n.1 (citing Ex. 1003 ¶ 31; Ex. 2001 ¶¶ 39–48; Ex. 2003, 30:13–31:22).

(2) Petitioner's Reply

Petitioner replies that it applies the ordinary and customary meaning of "agent communication bus," but Patent Owner applies an unsupported narrower interpretation that limits the term to "a bus that routes data outside an application." Pet. Reply 4–6 (citing Pet. 2, 30; PO Resp. 5, 7; Ex. 2001 ¶ 37). Petitioner argues that Patent Owner does not address how the '733 patent describes the term and does not cite to any intrinsic or extrinsic evidence. *Id.* at 6 (citing PO Resp. 8–12). Petitioner also argues that Patent Owner's cited testimony "merely parrots" Patent Owner's arguments, "lacks evidentiary underpinning," and is entitled to little weight. *Id.* at 6–7 (citing PO Resp. 7, 9; Ex. 2001 ¶ 37). Petitioner further argues that Patent Owner contorts the evidence identified by Petitioner's declarant and that the relied-upon evidence fully corroborates Petitioner's declarant. *Id.* at 7 (citing PO Resp. 9; Ex. 1003 ¶¶ 124–125; Ex. 2001 ¶¶ 37, 49–50).

In Petitioner's view, the intrinsic and extrinsic evidence does not limit "agent communication bus" to buses for communications external to an application. Pet. Reply 8–10 (citing Pet. 30; Ex. 1001, 42:48–61, 42:67–43:7; Ex. 1003 ¶ 124; Ex. 1045, 20–21, 54–55; Ex. 1046, 46; Ex. 1047, 5:41–61; Ex. 1048 ¶¶ 1, 3, 4, 19; Ex. 1049, 907; Ex. 1050, 2:64–3:6, 3:51–58, Fig. 5). Petitioner contends that the term "encompasses any communication link between processes and is not limited to buses that ***only*** facilitate communications that are 'external' to an application," as argued by Patent Owner. *Id.* at 10 (citing PO Resp. 8–9; Ex. 1038, 24).

Petitioner also replies that TS-23.140 and Ogawa would have rendered obvious "agent communication bus" under either party's proposed interpretation. Pet. Reply 10–25. Specifically, under Petitioner's proposed interpretation that "encompasses a communication link for agents/applications, regardless of whether such communication is internal or external to an application," Petitioner argues that the parties do not dispute that (1) MMS User Agent is a "service control device link agent," (2) destination applications are "device agents," and (3) the MMS User Agent and destination applications are communicatively coupled through "an agent communication bus." *Id.* at 10–12 (citing Pet. 28, 29–31; PO Resp. 1, 6; Ex. 1001, 42:48–61; Ex. 1003 ¶ 124; Ex. 1004, 23–24, 30–31, 35–36, 54–56; Ex. 1038, 24); *see also id.* at 16 (citing Pet. 27–30).

Petitioner further argues that Patent Owner relies on its uncorroborated testimony that does not rule out buses for communicating between subparts and that Patent Owner has no supporting evidence or technical reasoning that data can be managed without a bus. Pet. Reply 14–15 (citing Pet. 30; PO Resp. 9, 10; Ex. 1001, 42:48–54, 42:67–43:7; Ex. 1003 ¶¶ 124–126; Ex. 1031, 10:56–62; Ex. 1038, 24; Ex. 1045, 96, 156–157; Ex. 1046, 46; Ex. 1048 ¶¶ 1, 3, 4, 19; Ex. 1050, 2:64–3:6, 3:51–58, 5:41–61, Fig. 5; Ex. 2001 ¶¶ 37, 38). Petitioner additionally contends that, to the extent Patent Owner is arguing a bus would not have been used for applications in the same area of memory, buses can be used to facilitate communications between software components in the same area of memory. *Id.* at 16 (citing PO Resp. 10; Ex. 1001, 42:54–67); *see also id.* at 16 (citing Pet. 30; PO Resp. 7).

Under Patent Owner's narrower interpretation, Petitioner contends that TS-23.140 and Ogawa would still render obvious "agent communication bus." Pet. Reply 17 (citing PO Resp. 9; Ex. 2001 ¶ 37), 24. According to

Petitioner, "TS-23.410 never refers to destination applications as 'subapplications' of the MMS User Agent," and Patent Owner is taking out of context the description that applications may "reside on an MMS User Agent." *Id.* (citing PO Resp. 8; Ex. 1004, 54). In Petitioner's view, that description makes clear that destination applications are not internal to the MMS User Agent and that one of ordinary skill in the art would have understood that MMS User Agent in this description refers to the user device or equipment. *Id.* at 17–18; *see also id.* at 18–19 (arguing why destination applications are not internal to the MMS User Agent Application) (citing Pet. 6; PO Resp. 8; Ex. 1003 ¶¶ 51, 52; Ex. 1004, 54–56, 60). Petitioner, thus, contends that, even under Patent Owner's interpretation, the proposed combination includes an "agent communication bus" "because it transports data from the MMS User Agent to a separate, external destination application." *Id.* at 18 (citing Pet. 30–31).

Petitioner also argues that TS-23.140 discloses that MMS User Agent application and destination applications are separate because it describes "an application other than the MMS User Agent," "another application's behalf," and "two entities." Pet. Reply 19–20 (citing Pet. 6; Ex. 1004, 14, 54, 56), 24. Petitioner provides other similar examples (*id.* at 20 (citing Ex. 1004, 14, 19, 54, 55, 56)) and corroboration from another source (*id.* at 21 (citing Pet. 6, 29; Ex. 1028 (Miraj E. Mostafa, *Transporting Data Between Wireless Applications Using a Messaging System--MMS*, Wireless Communications and Mobile Computing 732–733, Fig. 4) (2007) ("Mostafa")). Petitioner, thus, argues that TS-23.140 never describes or requires destination applications to be subparts of the MMS User Agent Application, as asserted by Patent Owner. *Id.* at 20, 21 (citing PO Resp. 8–9), 24 (citing PO Resp. 8–9).

Petitioner also provides support that one of ordinary skill in the art would have understood that MMS User Agent can refer to the user device in some contexts, such as when the phrase "an application other than the MMS User Agent" is used, a device or terminal is labeled "MMS UA," or the MMS User Agent is described as a client. Pet. Reply 21–23 (citing PO Resp. 8–9; Ex. 1003 ¶ 51; Ex. 1004, 14, 54, Fig. A.8). According to Petitioner, Patent Owner's declarant conceded that a "client" is a "computer" and confirmed in a deposition for another proceeding that TS-23.140 refers to an MMS User Agent being reachable over a network. *Id.* at 23–24 (citing Ex. 1051, 51:21–53:6; Ex. 2001 ¶ 43; Ex. 2004, 102).

(3) Patent Owner's Sur-Reply

According to Patent Owner, the parties do not dispute that (1) destination applications must reside on the MMS User Agent in order for that application to receive application data and (2) the MMS User Agent is defined as an application residing on user equipment or another device. PO Sur-reply 3–4 (citing PO Resp. 1, 8–9; Ex. 1004, 14, 18, 54, 56; Ex. 2001 ¶¶ 38, 45–48; Ex. 2003, 28:17–19), 20 (citing Ex. 1004, 14). Patent Owner contends that the only dispute is the meaning of "reside on an MMS User Agent." *Id.* at 4. Patent Owner argues that, in Petitioner's view, it means an application residing on the device and not on the MMS User Agent application software, and, in Patent Owner's view, it means an application residing on the MMS User Agent application. *Id.* (citing Pet. 6; PO Resp. 1–2, 8–9; Pet. Reply 22).

Patent Owner also argues that both parties' declarants agree that residing on another application in the context of TS-23.140 means the application is a subapplication of the other application. PO Sur-reply 4–6 (citing Ex. 2001 ¶¶ 37–38, 46–48; Ex. 2003, 29:16–30:11), 20 (citing Ex. 2001 ¶ 38; Ex. 2003, 29:16–30:11). Patent Owner further argues that

Petitioner does not explain nor address how an application can reside on another application without being a subapplication in view of TS-23.140's explicit definition. *Id.* at 6–7 (citing Pet. Reply 21–25; Ex. 1004, 14), 20 ("Petitioner in Reply does not even ***address*** these undisputed facts, which show that the destination applications in TS-23.140 are subapplications of the MMS User Agent.").

Patent Owner additionally argues that Petitioner's reliance on TS-23.140's teaching regarding "application data" distinguishes MMS User Agent functionality and its subapplication but does not provide a reason to give less weight to the explicit definition of "MMS User Agent." PO Sur-reply 7–8 (citing Pet. Reply 19–22; Ex. 2001 ¶ 48). According to Patent Owner, Petitioner's reliance on Figure A.8 of TS-23.140 shows that MMS User Agent resides on a terminal but does not equate that device with the MMS User Agent. *Id.* at 8–9 (citing Pet. Reply 22–23; Ex. 1003, Fig. A.8).

Regarding Petitioner's definition that "client" can refer to a computer, Patent Owner cites another dictionary definition and argues that "'client' ***can also*** refer to a software application." PO Sur-reply 9 (citing Pet. Reply 23–24; Ex. 2004). In Patent Owner's view, "the ***more common*** understanding of client as referring to a software application is consistent with ***TS-23.140's*** definition," and Petitioner ignores the more common definition of "client." *Id.* at 9–10. Patent Owner also argues that "Mostafa makes clear that it is applying ***TS-23.140***'s definition of 'MMS User Agent,' and not using it to refer to a complete user device." *Id.* at 10 (citing Ex. 1004, 18; Ex. 1028, 731).

Regarding Petitioner's reliance on deposition testimony from another proceeding, Patent Owner argues that its declarant "never stated, or even implied, that in the context of TS-23.140, the words 'MMS User Agent' refer to a device or user terminal as Petitioner inaccurately suggests," and

merely indicated that, if the MMS User Agent is reachable, then the device with the MMS User Agent is reachable. PO Sur-reply 10–11 (citing Pet. Reply 24; Ex. 1051, 52:4–53:6). Patent Owner also quotes "MMS User Agent: application residing on a UE" from TS-23.140. *Id.* at 11 (citing Ex. 1004, 14). Patent Owner further argues that Petitioner's declarant "used a 'chess application' as an ***explicit example*** of a subapplication within a VAS application (which is analogous to an MMS User Agent in the context of TS-23.140)." *Id.* at 11–12 (citing Pet. Reply 20; Ex. 2001 ¶ 47; Ex. 2003, 29:16–30:11). In Patent Owner's view, the record "confirms that applications that receive application data in TS-23.140 reside on, and are thus subapplications of, the MMS User Agent." *Id.* at 12; *see also id.* at 2 (arguing that Petitioner relies on a flawed premise that an application "resid[ing] on" an MMS User Agent means that the application resides on the device, but TS-23.140 makes clear that such applications are subparts of the MMS User Agent).

Patent Owner also argues that a bus was not typically used for intra-application communication. PO Sur-reply 12–13. Patent Owner further argues that, although its declarant could not opine that a bus was never used for intra-application communication, its declarant addressed Petitioner's assertion by explaining that "simpler options that do not involve a bus [we]re available and widely used for intra-application communication," and there would have been no motivation to use a bus for such communication. *Id.* at 13 (citing Ex. 2001 ¶¶ 38, 49).

Patent Owner notes that Petitioner does not provide any rebuttal testimony and "relies ***solely*** on attorney argument to characterize various references as supposedly disclosing the use of a bus to communicate data ***within*** an application." PO Sur-reply 14. According to Patent Owner, a bus

for intra-application communication was not a "familiar, known component." *Id.*

Patent Owner argues that it has never contended that "agent communication bus" excludes anything used for intra-application communication but has made clear that the ordinarily skilled artisan "did not view the use of a bus as desirable for use in intra-application communications" and, thus, a bus would not have been obvious to use in TS-23.140. PO Sur-reply 14–15 (citing PO Resp. 9–11; Pet. Reply 4–10). Patent Owner also argues that merely asserting that the definition of "bus" does not rule out a bus for intra-application communication is not sufficient to show obviousness. *Id.* at 1–2 (citing Pet. Reply 4–10, 11–12), 15.

Patent Owner further argues that Petitioner asserts attorney arguments to support that buses were used for communicating with subapplications. PO Sur-reply 15 (citing Pet. Reply 14). In Patent Owner's view, Petitioner's cited evidence fails to support that a bus was used for communicating with subapplications because the cited references do not mention a bus or are not appropriate for software applications. *Id.* at 15–17 (citing Pet. Reply 14; Ex. 1045, 23; Ex. 1048 ¶ 3; Ex. 1050, code (54), 1:6–39, 2:50–51, 2:64–3:13, 9:19–35, Figs. 11–20).

(4) Petitioner Shows the Limitation

(a) "a plurality of device agents communicatively coupled to the service control device . . . "

We find, as argued by Petitioner, that the destination applications of TS-23.140 communicating with an MMS User Agent teach or suggest "a plurality of device agents communicatively coupled to the service control device link agent." Pet. 28–29; Ex. 1004, 54–56. The cited portions of TS-23.140 describe MMS being "used to transport data specific to applications" (*id.* at 54–55) and that data including an "application identifier of the

destination application" and "application/implementation specific control information" (*id.*). We credit Petitioner's testimonial evidence regarding the "plurality of device agents" because the cited portions of the record support it. Ex. 1003 ¶¶ 120–122; Ex. 1004, 54–56; Ex. 1028, 732–733.

We agree with Petitioner that the '733 patent uses the term "agent" to include components implemented "entirely in software" to perform a function on behalf of a client or server. Pet. 28; Ex. 1001, 15:58–60 ("In some embodiments, the service processor 115 includes various components, such as device agents, that perform service policy implementation or management functions."), 15:60–16:2 (listing some functions of device agents), 42:51–52 (describing that "agents are implemented largely or entirely in software"); Ex. 1003 ¶ 120. We, thus, agree with Petitioner that the term "agent" as used by the '733 patent would encompass the destination applications of TS-23.140.

As discussed above, we find that TS-23.140's MMS User Agent teaches or suggests the "service control device link agent." Ex. 1003 ¶ 119; Ex. 1004, 14, 19, 23–24, 30–31, 35–36. The parties do not dispute that a destination application is in communication with an MMS User Agent. PO Resp. 8–12; Pet. Reply 1; PO Sur-reply 2–12.

Patent Owner does not dispute Petitioner's arguments regarding the "plurality of device agents communicatively coupled to the service control device link agent." *See* PO Resp.; PO Sur-reply. Based on the full record, Petitioner persuades us, and we find, that TS-23.140 teaches or suggests "a plurality of device agents communicatively coupled to the service control device link agent."

(b) " . . . through an agent communication bus"

Patent Owner disputes that the asserted plurality of device agents is communicatively coupled to the asserted service control device link agent "through an agent communication bus." PO Resp. 6–11; PO Sur-reply 1–21.

As discussed above, Petitioner does not propose expressly an interpretation for any claim term (Pet. 2), and Patent Owner argues that "formal claim construction is not necessary" (PO Resp. 5). Petitioner's argument is based on the asserted use of "agent communication bus" in the '733 patent. Pet. 28–30 (citing Ex. 1001, 42:48–61). The cited portion of the '733 patent states that:

> In some embodiments of the agent communication bus 1630, the design of the agent communication bus depends on the nature of the design embodiments for the agents and/or other functions. For example, if the agents are implemented largely or entirely in software, then the agent communication bus can be implemented as an inter-process software communication bus. In some embodiments, such an inter-process software communication bus is a variant of D-bus (e.g., a message bus system for inter-process software communication that, for example, helps applications/agents to talk to one another), or another inter-process communication protocol or system, running a session bus in which all communications over the session bus can be secured, signed, encrypted or otherwise protected.

Ex. 1001, 42:48–61.

Petitioner's cited portion of the '733 patent supports its argument that "agent communication bus" does not exclude expressly intra-application communication. Ex. 1001, 42:48–61. The '733 patent states that "if the agents are implemented largely or entirely in software," like the destination applications of TS-23.140, "then the agent communication bus can be implemented as an inter-process software communication bus," that "[i]n some embodiments" would be "a variant of D-bus" or "a message bus

system for inter-process software communication that, for example, helps applications/agents to talk to one another." *Id.* at 42:51–58.

One of ordinary skill in the art would have also understood that destination applications would have been communicatively coupled to the MMS User Agent by "an agent communication bus," as that term is used in the '733 patent, because they are, in the words of the '733 patent, "talk[ing] to one another." Ex. 1001, 42:51–58; Ex. 1003 ¶ 124; *see also* Ex. 1038, 24.

Patent Owner responds that the recited "bus" would not encompass communications that occur internally within an application. PO Resp. 7 (citing Ex. 2001 ¶¶ 35–50), 9–10 (citing Ex. 2001 ¶¶ 37–38, 49–50). As noted by Petitioner, Patent Owner does not address how the above-quoted portion of the '733 patent excludes communications that occur internally within an application. Pet. Reply 6.

Based on the full record, we determine that the scope of "agent communication bus" does not exclude intra-application communications. Pet. 30; Ex. 1001, 42:48–61; Ex. 1003 ¶ 124; Pet. Reply 8–10; *see also* PO Sur-reply 14 ("Patent Owner has never argued that the claimed 'agent communication bus' would, by definition, exclude anything used for intra-application communication bus."), 15 ("Even if Petitioner is correct that the definition of 'agent communication bus' does not ***categorically exclude*** a bus used for intra-application communication (an issue on which Patent Owner has never taken any position because it is irrelevant to Patent Owner's argument), that plainly would not be sufficient to show that the use of such a bus for intra-application communication ***would have been obvious***."); Ex. 1038, 24 (Amended Infringement Contentions) (indicating that an example of "an agent communication bus" is a "communication path for various agents and functions to communicate over"). We also determine that giving "agent communication bus" broad scope does not read out the

limitation, because the '733 patent itself indicates that the term is broad. *See* Ex. 1001, 42:48–61; Ex. 1003 ¶ 124.

We also find that Petitioner's cited portions of TS-23.140 show that one of ordinary skill in the art would have understood that "destination applications" can be separate from and external to an MMS User Agent. Ex. 1004, 14, 19, 54, 55, 56. TS-23.140 defines "Application Data" as "Information/data specific to *an application other than the MMS User Agent*/VASP which is intended to be transported without alteration by using MMS." Ex. 1004, 14 (emphasis added). TS-23.140 also describes that "[a]pplications that intend to transport application specific data using MMS may either reside on an MMS User Agent or on an MMS VAS Application." *Id.* at 54.

TS-23.140 further describes "rout[ing] the received MMS information on to the destination application," "[i]f the *destination application resides on a receiving MMS VAS Application*" and "[i]f the destination application resides on a receiving MMS User Agent." Ex. 1004, 56 (emphasis added); *see also id.* ("If the destination application does not reside on the receiving MMS User Agent . . . or MMS VAS Application, the MMS User Agent or MMS VAS Application shall discard the corresponding abstract message."). TS-23.140 clarifies that "[a]pplications that reside on a[n] MMS VAS Application are differentiated from the MMS VAS Application," thus indicating that residing applications are not subapplications of the MMS VAS Application. *Id.* at 54.

The full record does not include any reason why the description quoted above does not apply to an application residing on an MMS User Agent. Based on the full record, we find that an application residing on an MMS User Agent would also be understood as being differentiated from the

MMS User Agent. *See* Ex. 1004, 54. The residing application, therefore, would not be understood to be a subapplication of the MMS User Agent. *Id.*

Figure 3 of TS-23.140 also shows "MMS Relay/Server" connected to "MMS User Agent A" via interface "MM1" and connected to "MMS VAS Applications" via interface "MM7." Ex. 1004, 23. The destination applications residing on "MMS VAS Applications" would not be part of, internal to, or a subapplication of "MMS User Agent A." *See id.* TS-23.140 further describes "exceptions" for "[w]hen MMS is used to transport data specific to applications between two MMS User Agents or an MMS User Agent and an MMS VAS Application." *Id.* at 55.

One of ordinary skill in the art would have understood from the disclosures discussed above that TS-23.140 teaches or suggests that a destination application may reside on an MMS User Agent or distinctly on an MMS VAS Application. Ex. 1004, 23, 56. The ordinarily skilled artisan would have also understood that application data specific to an application other than an MMS User Agent or MMS VAS Application can be transported between two MMS User Agents or between an MMS User Agent and an MMS VAS Application. *Id.* at 14, 54, 55.

In particular, we find that TS-23.140 discloses that its MMS User Agent and destination applications can be separate and in communication with each other, such as when application data is transported between an MMS User Agent and a destination application on an MMS VAS Application. One of ordinary skill in the art would have, thus, understood that the asserted device agents (destination applications) are communicatively coupled to the asserted service control device link agent (MMS User Agent) through an agent communication bus.

Also, even if destination applications were subapplications of an MMS User Agent, the scope of the term "agent communication bus" would

encompass the communication path between the MMS User Agent and a subapplication. Further, TS-23.140 describes that "MMS is used to transport data specific to applications between two MMS User Agents." Ex. 1004, 55. From this description, one of ordinary skill in the art would have understood that a first MMS User Agent is communicatively coupled to the destination applications of a second MMS User Agent. *See id.* One of ordinary skill in the art would have understood that the first MMS User Agent would have been communicatively coupled to a destination application of the second MMS User Agent through an agent communication bus that routes data outside of an application.

Turning to Patent Owner's responsive arguments, because we determine that "agent communication bus" encompasses intra-application communications, arguments based on "agent communication bus" excluding applications "talk[ing] to one another" (such as an application talking to its subapplication) fail to show a deficiency in Petitioner's contentions for "agent communication bus." PO Resp. 8–12; PO Sur-reply 1–21. We also find that TS-23.140 describes "rout[ing] the received MMS information on to the destination application," "[i]f the destination application resides on a receiving MMS User Agent." Ex. 1004, 56.

Based on the full record, Petitioner persuades us, and we find that, one of ordinary skill in the art would have understood that the asserted device agents of TS-23.140 (destination applications) are communicatively coupled to the asserted service control device link agent of TS-23.140 (MMS User Agent) through an "agent communication bus," in accordance with the usage of the term in the '733 patent. Pet. 30; Ex. 1001, 42:48–61; Ex. 1003 ¶¶ 123, 124; Ex. 1004, 54; Ex. 1038, 24.

f) "each of the plurality of device agents identifiable by an associated device agent identifier"

Petitioner argues that TS-23.140's "destination application identifier" teaches "device agents identifiable by an associated device agent identifier." Pet. 31 (citing Ex. 1003 ¶ 127; Ex. 1004, 54–56); *see also id.* at ii (labeling the limitation "1b").

As discussed above, we find that TS-23.140's destination applications teach or suggest the "plurality of device agents." Petitioner's relied-upon portion of TS-23.140 describes that "[a]pplications that want to transport data specific to applications other than MMS will initially need to register with the appropriate MMS User Agent or MMS VAS Application," "[d]uring this registration process the application provisions an MMS User Agent or MMS VAS Application with its application identification value," and the destination application identifiers are used in sending and receiving messages. Ex. 1004, 54–56. We credit Petitioner's testimonial evidence because the cited portion of TS-23.140 supports it. Ex. 1003 ¶ 127; Ex. 1004, 54–56. Patent Owner does not provide a responsive argument regarding the above-quoted limitation. *See* PO Resp.

Based on the full record before us, Petitioner persuades us, and we find, that TS-23.140 teaches or suggests "each of the plurality of device agents identifiable by an associated device agent identifier."

g) "memory configured to store an encryption key"

Petitioner contends that the user device of TS-23.140 has a memory and that Ogawa teaches the well-known technique of storing an encryption key in memory connected to each device that encrypts or decrypts communications. Pet. 15 (citing Ex. 1003 ¶ 84; Ex. 1004, 19–20; Ex. 1005, 3:18–34, 4:48–57, 5:59–65, 6:64–7:21, Figs. 1, 7). Petitioner further

contends that there were limited ways of ensuring that the same key is used. *Id.* at 15–16 (citing Ex. 1003 ¶ 85).

Petitioner, thus, argues that its proposed combination includes the recited memory. Pet. 32 (citing Ex. 1003 ¶¶ 128–129); *see also id.* at ii (labeling the limitation "1c"). Petitioner also provides an argument based on Patent Owner's interpretation from related litigation. *Id.* at 32–33 (citing Ex. 1003 ¶¶ 130–132; Ex. 1021, 3–12, 25–32; Ex. 1038, 8, 29).

The cited portion of TS-23.140 describes "retrieval of an MM and its storage to local memory." Ex.1004, 19–20. The cited portions of Ogawa describe and show a shared key from database server 2 via network 4 and encryption key 52 stored on removable storage 5. Ex. 1005, 3:18–34, 4:48–57, 5:59–65, 6:64–7:21, Figs. 1, 7. We credit Petitioner's testimonial evidence regarding the recited memory because the cited portions of the record support it. Ex. 1003 ¶¶ 84, 85; Ex. 1004, 19–20; Ex. 1005, 3:18–34, 4:48–57, 5:59–65, 6:64–7:21, Figs. 1, 7; Ex. 1006, 29, claim 3; Ex. 1009, 3:25–27, 8:1–5. Patent Owner does not provide a responsive argument regarding the above-quoted limitation. *See* PO Resp.

Based on the full record before us, Petitioner persuades us, and we find, that Ogawa teaches or suggests a "memory configured to store an encryption key." As discussed below in our analysis of Petitioner's proposed combination, Petitioner persuades us that TS-23.140 and Ogawa would have included "memory configured to store an encryption key."

h) "the encryption key shared between the service control device link agent and a service control server link element of the network system"

Petitioner argues that TS-23.140's MMS User Agent teaches or suggests a "service control device link agent" and the MMS Relay/Server and interface MM1 would have been understood to be a "service control server link element of the network system." Pet. 33–35 (citing Ex. 1001,

68:19–40; Ex. 1003 ¶¶ 133, 134); *see also id.* at ii (labeling the limitation "1c1"). Petitioner relies on Ogawa for the required encryption key. *Id.* at 35 (citing Ex. 1003 ¶¶ 135, 136). Petitioner further provides arguments based on Patent Owner's interpretation from related litigation. *Id.* at 35–36 (citing Ex. 1003 ¶ 137).

As discussed above, we find that TS-23.140's MMS User Agent teaches or suggests "a service control device link agent." We credit Petitioner's testimonial evidence that, based on the description in TS-23.140, the MMS Relay/Server would have been understood to teach "a service control server link element of the network system," as the term is used in the '733 patent, because the cited portions of the record support it. Ex. 1001, 68:19–40; Ex. 1003 ¶¶ 133–134; Ex. 1004, 23–24, Fig. 4.

Also, as discussed above, we find that Ogawa describes and shows a shared key from database server 2 and encryption key 52 stored on removable storage 5. Ex. 1005, 3:18–34, 4:48–57, 5:59–65, 6:64–7:21, Figs. 1, 7. We credit Petitioner's testimonial evidence that Ogawa's key in TS-23.140 would have been understood to be shared between the asserted service control device link agent (MMS User Agent) and the service control server link element of the network system (MMS Server/Relay) because the cited portions of the record support it. Ex. 1003 ¶¶ 135–137; Ex. 1004, 42; Ex. 1005, 5:59–65, 6:64–7:21, 9:16–21, 9:24–34, Fig. 7; Ex. 1009, 8:3–5; Ex. 1013, 3.

Patent Owner does not provide a responsive argument regarding the above-quoted limitation. *See* PO Resp. Based on the full record before us, Petitioner persuades us, and we find, that Ogawa teaches or suggests a shared "encryption key" and TS-23.140 teaches or suggests the "service control device link agent" and the "service control server link element of the network system." As discussed below in our analysis of Petitioner's

proposed combination, Petitioner persuades us that one of ordinary skill in the art would have implemented Ogawa's encryption key in TS-23.140 with a reasonable expectation of success.

i) "wherein the service control device link agent is configured to: receive, over the service control link, an encrypted agent message from the service control server link element"

Petitioner argues that MMS User Agent receives over interface MM1 data from MMS Relay/Server. Pet. 36 (citing Ex. 1003 ¶ 138); *see also id.* at ii (labeling the limitation "1d1"). Petitioner also argues that the messages would have been encrypted in the proposed combination. *Id.* at 37 (citing Ex. 1003 ¶ 140). Petitioner further provides arguments based on Patent Owner's interpretation from related litigation. *Id.* (citing Ex. 1003 ¶ 141).

For the reasons discussed above, we find that TS-23.140 teaches or suggests that its MMS User Agent receives data over interface MM1 from MMS Relay Server. We also credit Petitioner's testimonial evidence regarding the wherein clause quoted above and that the received message would be encrypted in the proposed combination because the cited portions of the record support it. Ex. 1003 ¶¶ 138, 140, 141; Ex. 1004, 14, 18, 25, 41; Ex. 1013, 3; Ex. 1014, 3. Patent Owner does not provide a responsive argument regarding the above-quoted limitation. *See* PO Resp.

Based on the full record before us, Petitioner persuades us, and we find, that TS-23.140 teaches or suggests a service control device link agent configured to receive, over the service control link, an agent message from the service control server link element and that, in the proposed combination, the agent message would have been encrypted.

j) "using the encryption key, obtain a decrypted agent message"

For the service control device link agent being configured to obtain a decrypted agent message by using the encryption key, Petitioner argues that, in its proposed combination, encrypted messages are decrypted at the MMS

User Agent. Pet. 37–38 (citing Ex. 1003 ¶ 143); *see also id.* at ii (labeling the limitation "1d2"). Petitioner also provides arguments based on Patent Owner's interpretation from related litigation. *Id.* at 38 (citing Ex. 1003 ¶ 144).

For the reasons discussed above, we find that Ogawa teaches or suggests an encryption key. We also credit Petitioner's testimonial evidence regarding the limitation quoted above, because the cited portions of the record support it. Ex. 1003 ¶¶ 143, 144; Ex. 1004, 19; Ex. 1009, 6:59–7:17, 7:34–40, 8:1–5. Patent Owner does not provide a responsive argument regarding the above-quoted limitation. *See* PO Resp.

Based on the full record before us, Petitioner persuades us that the proposed combination of TS-23.140 and Ogawa would have had a service control device link agent configured to obtain a decrypted agent message using an encryption key.

k) "the decrypted agent message comprising a particular agent identifier and message content for delivery to a particular device agent of the plurality of device agents, the particular agent identifier identifying the particular device agent"

For the limitation quoted above, Petitioner argues that, in its proposed combination, encrypted messages are decrypted at the MMS User Agent to obtain the recited "decrypted agent messages" for applications on other devices. Pet. 39–40 (citing Ex. 1003 ¶¶ 145–148, 151; Ex. 1004, 14, 54–55, 56, 59); *see also id.* at ii (labeling the limitation "1d3"). Petitioner also argues that "destination application identifier" would have been understood to be the recited "particular agent identifier." *Id.* at 40 (citing Ex. 1003 ¶ 149).

The cited portions of TS-23.140 describe that "MMS may also be used to transport data specific to applications" (Ex. 1004, 54–55), that an "application provisions an MMS User Agent or an MMS VAS Application

with its application identification value and may negotiate with the MMS User Agent or MMS VAS Application the details (amount and format) of information to be exchanged between the two entities" (*id.*), and that messages contain "a destination application identifier" and "application/implementation specific control information" (*id.* at 5).

We credit Petitioner's testimonial evidence regarding the recited decrypted agent message because the cited portions of the record support it. Ex. 1003 ¶¶ 145–148; Ex. 1004, 5, 14, 54–55, 56, 69. We also credit the testimony that the "destination application identifier" would have been understood to be the recited "particular agent identifier" because the record also supports it. Ex. 1003 ¶ 149; Ex. 1008 ¶ 22; Ex. 1009 ¶ 22, Fig. 4. Patent Owner does not provide a responsive argument regarding the above-quoted limitation. *See* PO Resp.

Based on the full record before us, Petitioner persuades us that the proposed combination of TS-23.140 and Ogawa would have had a "decrypted agent message comprising a particular agent identifier and message content for delivery to a particular device agent of the plurality of device agents, the particular agent identifier identifying the particular device agent."

l) "the message content from a particular server of a plurality of servers communicatively coupled to the service control server link element"

Petitioner argues that application-specific data from VAS Applications provided by VAS providers communicating through the MMS Relay/Server teach the above-quoted limitation. Pet. 41–42 (citing Ex. 1003 ¶¶ 152–157; Ex. 1004, 23–24, 25–26, 41, 112, Fig. 3); *see also id.* at iii (labeling the limitation "1e").

As discussed above, we find that the MMS Relay/Server of TS-23.140 teaches or suggests a "service control server link element" and that

application-specific data teaches or suggests "the message content." We also find that Petitioner's cited portions of TS-23.140 teach or suggest that MMS VAS Applications on a server associated with a Value-Added Service Provider that communicates with the MMS Relay/Server through interface MM7, and that External Servers #1 through #N are each connected to MMS Relay/Server through interface MM3. Ex. 1004, 23–26, 41, 112, Fig. 3.

We credit Petitioner's testimonial evidence regarding the above-quoted limitation because the cited portions of the record support it. Ex. 1003 ¶¶ 152–157; Ex. 1004, 18, 23–26, 41, 42, 55, 112, 113, Fig. 3. Patent Owner does not provide a responsive argument for the above-quoted limitation. *See* PO Resp.

Based on the full record before us, Petitioner persuades us, and we find, that TS-23.140 teaches or suggests "message content from a particular server of a plurality of servers communicatively coupled to the service control server link element."

m) "based on the particular agent identifier, deliver the message content to the particular device agent over the agent communication bus"

For the limitation quoted above, Petitioner argues that, in its proposed combination, the MMS User Agent delivering application-specific data to a destination application based on a destination application identifier would have been understood to occur over an "agent communication bus." Pet. 42 (citing Ex. 1003 ¶ 158); *see also id.* at iii (labeling the limitation "1f").

As discussed above, we find that the MMS User Agent teaches or suggests a "service control device link agent" that delivers application-specific data to a destination application using an identifier included in the message. Also, as discussed above, we determine that one of ordinary skill in the art would have understood that the delivery of the message content would occur over an "agent communication bus." We further credit

Petitioner's testimonial evidence regarding the above-quoted limitation based on our above determinations. Ex. 1003 ¶ 158. Patent Owner does not provide a responsive argument regarding the above-quoted limitation other than arguments asserted for the "agent communication bus." *See* PO Resp.

Based on the full record before us, Petitioner persuades us, and we find, that TS-23.140 teaches, suggests, or would have been understood to have a service control device link agent configured to, "based on the particular agent identifier, deliver the message content to the particular device agent over the agent communication bus."

n) Petitioner's Asserted Reason for Combining

(1) modem

Petitioner argues that TS-23.140 would have been implemented with a modem because "it was well-known to use a ***modem*** to enable communications over the networks described in TS-23.140," "would have been a conventional and obvious way to implement what TS-23.140 describes," and would have been "nothing more than utilizing familiar, known components to achieve a predictable result of facilitating TS-23.140's communications." Pet. 9–10 (citing Ex. 1003 ¶¶ 61–63; Ex. 1004, 14, 17–19, 23–24; Ex. 1008 ¶¶ 27–28, 44, Figs. 1, 4); *see also id.* at 19 (summarizing the proposed combination). Petitioner also argues that there would have been a reasonable expectation of success in implementing a modem in TS-23.140. *Id.* at 10 (citing Ex. 1003 ¶ 63).

We find that the cited portions of the record show that modems were known for enabling communication over networks, such as those described in TS-23.140. Ex. 1004, 14, 17–19, 23–24; Ex. 1008 ¶¶ 27–28, 44, Figs. 1, 4. We credit Petitioner's testimonial evidence regarding modems and that one of ordinary skill in the art would have implemented TS-23.140 to include a modem with a reasonable expectation of success because the cited

portions of the record support the testimony. Ex. 1003 ¶¶ 61–63; Ex. 1004, 14, 17–19, 23–24; Ex. 1008 ¶¶ 27–28, 44, Figs. 1, 4.

Patent Owner does not dispute that one of ordinary skill in the art would have implemented TS-23.140 with a modem with a reasonable expectation of success, as argued by Petitioner. *See* PO Resp.

(2) SSL/TLS

According to Petitioner, "TS-23.140 explains that network communications between the MMS User Agent and the MMS Relay/Server use the MM1 Transfer Protocol." Pet. 10 (citing Ex. 1003 ¶¶ 64–65; Ex. 1004, 24, Fig. 4; Ex. 1018). Petitioner argues that one of ordinary skill in the art would have secured MM1 with an SSL/TLS protocol because "it was conventional and well-known for client-server communications to use SSL/TLS to achieve secure communications," "TS-23.140 contemplates implementations which use 'transport layer security mechanisms' (*e.g.*, SSL/TLS) to secure communication links," and "such an implementation is nothing more than utilizing familiar, known protocols to achieve a predictable result." *Id.* at 10–11 (citing Ex. 1003 ¶¶ 66–69); *see also id.* at 19 (summarizing the proposed combination). Petitioner also argues that there would have been a reasonable expectation of success in implementing MM1 to use SSL/TSL. *Id.* at 11 (citing Ex. 1003 ¶ 70).

We find that the cited portions of the record support that one of ordinary skill in the art would have used SSL/TLS protocol for the reasons asserted by Petitioner, and that such use would have had a reasonable expectation of success. Ex. 1003 ¶¶ 64–70; Ex. 1004, 24, Fig. 4; Ex. 1018. We credit Petitioner's testimonial evidence because the record supports it. Ex. 1003 ¶¶ 64–70; Ex. 1004, 24–25, 55, Fig. 4; Ex. 1010, 1:38–42; Ex. 1012, 21; Ex. 1013, 3; Ex. 1018.

Patent Owner does not dispute that one of ordinary skill in the art would have secured MM1 with SSL/TLS protocol for the reasons argued by Petitioner with a reasonable expectation of success. *See* PO Resp.

(3) encryption

Petitioner argues that "TS-23.140 does not provide details regarding how to implement additional end-user-to-end-user encryption beyond SSL/TLS." Pet. 12 (citing Ex. 1003 ¶¶ 71–72). According to Petitioner, "it was well-known to implement encryption for messages transmitted by a push server (e.g., TS-23.140's MMS Relay/Server) to an end-user device using symmetric encryption, with a key that is shared between the server and the end-user device and stored in their respective memories" and Ogawa discloses how to implement symmetric encryption. *Id.* (citing Ex. 1003 ¶¶ 72, 73; Ex. 1005, 3:61–4:4, 9:16–34).

Petitioner contends that one of ordinary skill in the art would have implemented Ogawa's symmetric data encryption technique because it "would have achieved a system 'having improved security' and providing 'an end-user to end-user' security solution for MMS applications," "would have been particularly beneficial for 'enterprise applications,'" and would have been implementing a known method or technique to a known system or device to achieve predictable results. Pet. 12–13 (citing Ex. 1003 ¶¶ 74–76) *see also id.* at 19 (summarizing the proposed combination). Petitioner also contends that there would have been a reasonable expectation of success. *Id.* at 13 (citing Ex. 1003 ¶¶ 77–79).

Petitioner also argues that one of ordinary skill in the art would have implemented Ogawa's decryption and encryption units in TS-23.140 because, for example, it would have "beneficially allowed the MMS User Agent to decrypt an encrypted message," and the ability to "securely store data on a user device was a desirable feature that would have helped prevent,

e.g., theft." Pet. 13–15 (citing Ex. 1003 ¶¶ 80–82) *see also id.* at 19 (summarizing the proposed combination). Petitioner further argues that there would have been a reasonable expectation of success. *Id.* at 15 (citing Ex. 1003 ¶ 83).

We find that the cited portions of the record support that it was known to implement symmetric encryption in message transmissions like those in TS-23.140 and that Ogawa discloses how to implement symmetric encryption. Ex. 1003 ¶¶ 72, 73; Ex. 1005, 3:61–4:4, 9:16–34; Ex. 1009, 3:25–27, 8:1–5; Ex. 1027 ¶¶ 54–60. We also credit Petitioner's testimonial evidence that one of ordinary skill in the art would have implemented Ogawa's decryption and encryption units in TS-23.140 for the reasons asserted by Petitioner, and that such implementation would have had a reasonable expectation of success, because the cited portions of the record support it. Ex. 1003 ¶¶ 71–72, 74–83; Ex. 1004, 14, 17, 19, 24–25, 41, 54–56, 62; Ex. 1005, 3:60–4:4, 4:34–57, 5:59–6:9, 6:64–7:21, 8:16–19, 9:16–34, Fig. 7; Ex. 1009, 3:25–27, 8:1–5; Ex. 1012, 21; Ex. 1027 ¶¶ 17, 21–22, 54–60.

Patent Owner does not dispute that one of ordinary skill in the art would have implemented Ogawa's decryption and encryption units in TS-23.140. *See* PO Resp.

(4) memory

Petitioner contends that Ogawa teaches the well-known technique of storing an encryption key in memory connected to each device that encrypts or decrypts communications. Pet. 15 (citing Ex. 1003 ¶ 84; Ex. 1005, 3:18–34, 4:48–57, 5:59–65, 6:64–7:21, Figs. 1, 7). Petitioner also contends that there were limited ways of ensuring that the same key is used. *Id.* at 15–16 (citing Ex. 1003 ¶ 85).

In Petitioner's view, one of ordinary skill in the art would have stored Ogawa's key in the memory of the user device in TS-23.140 "to facilitate decryption of encrypted messages received from the MMS Relay/Server" and "to implement the symmetric encryption teachings of Ogawa." Pet. 16–17 (citing Ex. 1003 ¶¶ 87, 88; Ex. 1005, 3:61–4:7, 5:41–47, 9:21–34, Fig. 7). Petitioner also argues that the proposed modification would have been implementing a known method to known systems to achieve a predictable result and would have been a design choice. *Id.* at 18 (citing Ex. 1003 ¶¶ 89–94; Ex. 1009, 3:25–27). Petitioner further argues that there would have been a reasonable expectation of success. *Id.* (citing Ex. 1003 ¶ 95).

We find that the cited portions of Ogawa teach storing an encryption key in memory connected to each device that encrypts or decrypts communications. Ex. 1003 ¶ 84; Ex. 1005, 3:18–34, 4:48–57, 5:59–65, 6:64–7:21, Figs. 1, 7. Because the cited portions of the record support it, we also credit Petitioner's testimonial evidence that (1) one of ordinary skill in the art would have stored Ogawa's key in the memory of the user device in TS-23.140 for the reasons asserted by Petitioner, (2) the proposed modification would have been implementing a known method to known systems to achieve a predictable result, and (3) the modification would have been a design choice. Ex. 1003 ¶¶ 87–94; Ex. 1005, 3:61–4:7, 5:41–58, 5:60–65, 6:64–7:21, 9:21–34, Fig. 7; Ex. 1009, 3:25–27. We further credit Petitioner's testimonial evidence that there would have been a reasonable expectation of success in making the modification because it was within ordinary skill in the art. Ex. 1003 ¶ 95.

Patent Owner does not dispute that one of ordinary skill in the art would have made the proposed modification. *See* PO Resp.

(5) agent communication bus

Petitioner argues that one of ordinary skill in the art would have implemented communications between the MMS User Agent and other applications over a bus, such as a D-bus. Pet. 30 (citing Ex. 1003 ¶ 125). Petitioner contends that using a bus would have been "nothing more than utilizing familiar, known components to achieve a predictable result of facilitating TS-23.140's user agent and other applications to interface with one another." *Id.* at 30–31 (citing Ex. 1003 ¶ 125). In Petitioner's view, there would have been a reasonable expectation of success in such implementation. *Id.* at 31 (citing Ex. 1003 ¶¶ 125–126).

(a) Patent Owner's Response

Patent Owner responds that Petitioner fails to show that TS-23.140 would have rendered obvious "a plurality of device agents communicatively coupled to the service control device link agent through an agent communication bus." PO Resp. 6 (citing Pet. 28–31), 11–12. As summarized above, Patent Owner argues, with citations to the record, that destination applications are part of an MMS User Agent. PO Resp. 7–9.

Specifically for Petitioner's alternative obviousness contention, Patent Owner argues that:

> it would not be obvious to use an "agent communication bus" to route data from the MMS User Agent to the various destination subapplications residing on the MMS User Agent, because "buses in computing are typically used to route data ***outside*** of a given application, not ***internal*** to an application (e.g., to subparts or subapplications within that application)."

PO Resp. 9 (citing Ex. 2001 ¶ 37). Patent Owner also argues that Petitioner's examples of buses are used for communications external to, not within, an application. *Id.* at 9–10 (citing Ex. 2001 ¶ 37). Patent Owner further argues that one of ordinary skill in the art would have known that "standard function calls" are used to direct data to subapplications and that

an agent communication bus is not needed or desirable. *Id.* at 10 (citing Ex. 2001 ¶¶ 38, 49–50).

Regarding Petitioner's supporting testimony, Patent Owner argues that the opinion is not credible because it assumes incorrectly and without evidence that the description of destination applications "resid[ing] on [an] MMS User Agent" refers to a device or user equipment, not the MMS User Agent. PO Resp. 10 (citing Ex. 1003 ¶ 51; Ex. 2001 ¶¶ 41–48). Patent Owner also argues that Petitioner ignores that TS-23.140's destination applications are subapplications or subparts of a MMS User Agent, and that there is no evidence that it would have been obvious to use an agent communication bus to manage data flow within the MMS User Agent. *Id.* at 11.

(b) Petitioner's Reply

As summarized above, Petitioner replies with citations to the record that Patent Owner's interpretation of "agent communication bus" is unsupported. Pet. Reply 4–6, 8–10. Petitioner also replies as summarized above that TS-23.140 and Ogawa would have rendered obvious "agent communication bus" under either party's proposed interpretation. Pet. Reply 10–25.

Petitioner further argues as it did in the Petition that it would have been obvious to implement a bus for communications between the MMS User Agent and the destination applications, and that such buses were known, contrary to Patent Owner's suggestion. Pet. Reply 12 (citing Pet. 30–31; Ex. 1045, 3, 16–17, 20, 64, 96, 156–157; Ex. 1048 ¶¶ 1, 3, 4, 19; Ex. 1050, 2:64–3:6, 3:51–67, Fig. 5). In Petitioner's view, Patent Owner's arguments rest on the flawed premise that destination applications are subapplications of the MMS User Agent, and that, even if the destination applications were subapplications, Patent Owner provides no credible basis

to disregard Petitioner's declarant. *Id.* at 13–14 (citing Pet. 30–31; PO Resp. 9–10; Ex. 1003 ¶¶ 124–126). Petitioner argues that Patent Owner's declarant bolsters that one of ordinary skill in the art would have had reason to use an "agent communication bus" to transport data from the MMS User Agent to a separate application. *Id.* at 24–25 (citing PO Resp. 9; Ex. 1003 ¶¶ 125–126; Ex. 2001 ¶ 37).

(c) Patent Owner's Sur-Reply

Patent Owner replies that Petitioner fails to provide a motivation to use a bus in TS-23.140 for intra-application communications. PO Sur-reply 1 (citing Pet. 30; Ex. 1003 ¶¶ 124–126), 2. In Patent Owner's view, Petitioner fails to provide a reason why one of ordinary skill in the art "would have implemented TS-23.140 messaging to destination applications as a 'bus' other than that 'it was well-known" and "doing so would have been simply using 'familiar, known components to achieve a predictable result.'" PO Sur-reply 12 (citing Pet. 30), 20–21. Patent Owner argues that Petitioner's analysis "was premised on the false assumption that destination applications were ***outside*** of the User Agent application." *Id.*

Patent Owner contends that, even if the cited references did show a bus used for intra-application communication, Petitioner only shows TS-23.140 could have been, not would have been, modified to use a bus. PO Sur-reply 18, 20–21 (citing Pet. Reply 4–10). Patent Owner also contends that Petitioner fails to rebut that a bus was not typically used for intra-application communication. *Id.* at 18–19 (citing Ex. 2001 ¶¶ 36–38, 49–50), 21. According to Patent Owner, one of ordinary skill in the art would have known of standard function calls for intra-application data, and it would not have been obvious to use a bus for that purpose. *Id.* at 1, 19–20 (citing Pet. Reply 15; Ex. 2001 ¶ 38).

(d) Petitioner Shows that an Agent Communication Bus Would Have Been Implemented

As discussed above, Petitioner persuades us that one of ordinary skill in the art would have understood that the asserted device agents (destination applications) are communicatively coupled to the asserted service control device link agent (MMS User Agent) through an "agent communication bus," in accordance with the usage of the term in the '733 patent. Pet. 30; Ex. 1001, 42:48–61; Ex. 1003 ¶¶ 123, 124; Ex. 1004, 54; Ex. 1038, 24.

To the extent required, Petitioner also persuades us that one of ordinary skill in the art would have implemented a bus for communications between the destination applications and the MMS User Agent. Pet. 30. As discussed above, we find that TS-23.140 does not describe destination applications as subapplications of the MMS User Agent. Also, as discussed above, TS-23.140 makes clear that the MMS User Agent communicates with destination applications.

We credit Petitioner's testimonial evidence that a bus was known for inter-process communication and would have been a conventional way to implement what TS-23.140 describes, because the cited portions of the record support it. Ex. 1003 ¶ 125; Ex. 1008 ¶ 28, Fig. 4; Ex. 1028, 732–733; Ex. 1031, 10:56–62. Because Petitioner shows that a bus was a known way to implement TS-23.140, we credit Petitioner's testimonial evidence that using such a bus would have been using a known component to achieve the predictable result of providing the described communications between the MMS User Agent and destination applications. Ex. 1003 ¶ 126. "The combination of familiar elements according to known methods is likely to be obvious when it does no more than yield predictable results." *KSR,* 550 U.S. at 416. We also credit the testimony that the implementation would have had a reasonable expectation of success. Ex. 1003 ¶ 126. Petitioner also

cites record evidence that corroborates the proposed implementation. Ex. 1003 ¶ 125; Ex. 1008 ¶ 28, Fig. 4.

Turning to Patent Owner's responsive arguments, we find, for the reasons discussed above, that TS-23.140 does not describe its destination applications as only subapplications of MMS User Agent. Also, knowledge that "standard function calls" could have been used, instead of a bus, does not show a defect in Petitioner's proposed implementation of a communication bus in TS-23.140. Patent Owner's other arguments are addressed above.

o) Objective Indicia of Non-obviousness

Patent Owner does not present any arguments or evidence regarding any objective indicia of nonobviousness for any of the challenged claims. *See* PO Resp.

p) Petitioner Shows by a Preponderance of the Evidence that Claim 1 is Unpatentable

"Once all relevant facts are found, the ultimate legal determination [of obviousness] involves weighing of the fact findings to conclude whether the claimed combination would have been obvious to an ordinary artisan." *Arctic Cat Inc. v. Bombardier Recreational Prods. Inc.*, 876 F.3d 1350, 1361 (Fed. Cir. 2017) (quoting *In re Cyclobenzaprine Hydrochloride Extended-Release Capsule Patent Litig.*, 676 F.3d 1063, 1068–69 (Fed. Cir. 2012)). Above, based on full record before us, we provide our factual findings regarding (1) the level of ordinary skill in the art, (2) the scope and content of the prior art, (3) any differences between the claimed subject matter and the prior art, and (4) objective evidence of nonobviousness.

In particular, we find that (1) Patent Owner's proposed level of ordinary skill in the art is consistent with the prior art of record, (2) TS-23.140 and Ogawa teach, suggest, or would have been understood to

disclose all the limitations of claim 1, (3) one of ordinary skill in the art would have combined TS-23.140 and Ogawa in the manner asserted by Petitioner with a reasonable expectation of success, and (4) no objective evidence of nonobviousness has been presented in relation to any of the challenged claims. Weighing these underlying factual determinations, a preponderance of the evidence persuades us that claim 1 of the '733 patent is unpatentable over TS-23.140 and Ogawa. *Arctic Cat*, 876 F.3d at 1361.

4. Dependent Claims 2–17, 19, 21–27, and 29

Claims 2–17, 19, 21–27, and 29 depend, directly or indirectly, from claim 1. Petitioner contends that TS-23.140 alone or TS-23.140 combined with Ogawa teaches or suggests the recitations of these claims. Pet. 43–76. Petitioner supports the contentions with declaration testimony that we credit because the cited portions of the record support it. *Id.*

We determine that Petitioner's contentions regarding these dependent claims are fully supported by the record. Patent Owner does not additionally dispute Petitioner's challenges to these claims apart from its contentions regarding claim 1. *See* PO Resp. Weighing the underlying factual determinations, a preponderance of the evidence persuades us that claims 2–17, 19, 21–27, and 29 of the '733 patent are unpatentable over TS-23.140 and Ogawa.

5. Independent Claim 30

Petitioner presents arguments for independent claim 30 together with its arguments for claim 1. *See* Pet. 20, 24–31, 33–42. For the reasons discussed above for claim 1, we find that TS-23.140 and Ogawa teach, suggest, or would have been understood to disclose the limitations of claim 30. We also determine that one of ordinary skill in the art would have combined TS-23.140 and Ogawa in the manner asserted with a reasonable

expectation of success. Patent Owner does not provide responsive arguments specifically for independent claim 30. *See* PO Resp. 6–12.

Weighing the underlying factual determinations, a preponderance of the evidence persuades us that claim 30 of the '733 patent is unpatentable over TS-23.140 and Ogawa.

III. CONCLUSION[3]

In summary:

Claims	35 U.S.C. §	References/Basis	Claims Shown Unpatentable	Claims Not Shown Unpatentable
1–17, 19, 21–27, 29, 30	103(a)	TS-23.140, Ogawa	1–17, 19, 21–27, 29, 30	
Overall Outcome			1–17, 19, 21–27, 29, 30	

[3] Should Patent Owner wish to pursue amendment of the challenged claim in a reissue or reexamination proceeding subsequent to the issuance of this decision, we draw Patent Owner's attention to the April 2019 *Notice Regarding Options for Amendments by Patent Owner Through Reissue or Reexamination During a Pending AIA Trial Proceeding*. *See* 84 Fed. Reg. 16,654 (Apr. 22, 2019). If Patent Owner chooses to file a reissue application or a request for reexamination of the challenged patent, we remind Patent Owner of its continuing obligation to notify the Board of any such related matters in updated mandatory notices. *See* 37 C.F.R. § 42.8(a)(3), (b)(2).

IV. ORDER

In consideration of the foregoing, it is hereby:

ORDERED that claims 1–17, 19, 21–27, 29, 30 of U.S. Patent No. 8,406,733 B2 have been shown, by a preponderance of the evidence, to be unpatentable; and

FURTHER ORDERED that, because this is a Final Written Decision, the parties to the proceeding seeking judicial review of the decision must comply with the notice and service requirements of 37 C.F.R. § 90.2.

FOR PETITIONER:

W. Karl Renner
Jeremy Monaldo
Karan Jhurani
Turhan Sarwar
Parvin Ghane
FISH & RICHARDSON P.C.
axf-ptab@fr.com
jjm@fr.com
jhurani@fr.com
TSarwar-PTAB@wolfgreenfield.com
ghane@fr.com

FOR PATENT OWNER:

Reza Mirzaie
Dale Chang
James Milkey
Neil Rubin
Philip X. Wang
RUSS, AUGUST & KABAT
rmirzaie@raklaw.com
dchang@raklaw.com

jmilkey@raklaw.com
nrubin@raklaw.com
pwang@raklaw.com

EXHIBIT 12

Trials@uspto.gov
571-272-7822

Paper 20
Date: October 1, 2025

UNITED STATES PATENT AND TRADEMARK OFFICE

BEFORE THE PATENT TRIAL AND APPEAL BOARD

GOOGLE LLC, CELLCO PARTNERSHIP D/B/A VERIZON WIRELESS,
VERIZON CORPORATE SERVICES GROUP INC.,
T-MOBILE USA, INC., SPRINT LLC F/K/A SPRINT CORP.,
and AT&T SERVICES, INC.,
Petitioner,

v.

HEADWATER RESEARCH LLC,
Patent Owner.

IPR2024-00942
IPR2024-00943
Patent 8,589,541 B2[1]

Before HYUN J. JUNG, SCOTT B. HOWARD,
and STEPHEN E. BELISLE, *Administrative Patent Judges.*

HOWARD, *Administrative Patent Judge*.

JUDGMENT
Final Written Decision
Determining All Challenged Claims Unpatentable
35 U.S.C. § 318(a)

---

[1] The parties are not authorized to use this style caption unless later permitted.

I. INTRODUCTION

A. Background and Summary

In these *inter partes* reviews, instituted pursuant to 35 U.S.C. § 314, Google LLC, Cellco Partnership d/b/a Verizon Wireless, Verizon Corporate Services Group Inc., T Mobile USA, Inc., Sprint LLC f/k/a Sprint Corp., and AT&T Services, Inc. (collectively "Petitioner") challenging claims 2–23, 26, 41–60, 63, 64, 91–152, and 155–171 ("the challenged claims") of U.S. Patent No. 8,589,541 B2 (Ex. 1001, "the '541 patent"), owned by Headwater Research LLC ("Patent Owner").

As explained in detail below, the references applied against the challenged claims are identical in each of the cases. Petitioner relies on the same declarant submitting an identical declaration in each proceeding for testimonial evidence. Under these circumstances, we determine that a combined Final Decision will promote a just, speedy, and inexpensive resolution of these proceedings. *See* 37 C.F.R. §§ 42.5(a), 42.122(a) (2023).

The Board has jurisdiction under 35 U.S.C. § 6(b) (2024). This Final Written Decision issues pursuant to 35 U.S.C. § 318(a). For the reasons that follow, we determine that Petitioner has shown by a preponderance of the evidence that the challenged claims are unpatentable.

1. IPR2024-00942 Procedural History

Petitioner filed a Petition requesting *inter partes* review of claims 1–23, 26, 41–60, 63, 64, 155–157, and 160–171 of the '541 patent. Paper 1[2] ("Petition" or "Pet."). Patent Owner filed a statutory disclaimer disclaiming certain claims of the '541 patent, including challenged claim 1. Ex. 3001.

[2] Unless otherwise noted, all citations are to IPR2024-00942.

We instituted an *inter partes* review of claims 2–23, 26, 41–60, 63, 64, 155–157, and 160–171 on all grounds of unpatentability alleged in the Petition. Paper 10 ("Institution Decision" or "Inst. Dec.").

After institution of trial, Patent Owner filed a Response (Paper 12, "PO Resp."), Petitioner filed a Reply to Patent Owner's Response (Paper 14), and Patent Owner filed a Sur-reply to Petitioner's Reply (Paper 18, "PO Sur-reply").

2. IPR2024-00943 Procedural History

Petitioner filed a Petition requesting *inter partes* review of claims 1, 91–152, 158, and 159 of the '541 patent. IPR2024-00943, Paper 1, 1 ("943Pet."). However, Patent Owner filed a statutory disclaimer disclaiming certain claims of the '541 patent, including challenged claim 1. Ex. 3001. We instituted an *inter partes* review of claims 91–152, 158, and 159 on all grounds of unpatentability alleged in the Petition. IPR2024-00943, Paper 6.

After institution of trial, Patent Owner filed a Response (IPR2024-00943, Paper 10), Petitioner filed a Reply to Patent Owner's Response (IPR2024-00943, Paper 14), and Patent Owner filed a Sur-reply to Petitioner's Reply (IPR2024-00943, Paper 18).

B. Real Parties in Interest

Petitioner identifies Google LLC, Cellco Partnership d/b/a Verizon Wireless, Verizon Corporate Services Group Inc., T-Mobile USA, Inc., Sprint LLC f/k/a Sprint Corp., AT&T Services, Inc., AT&T Mobility LLC, and AT&T Enterprises LLC as the real parties in interest. Pet. 81; 943Pet. 90.

Patent Owner identifies Headwater Research LLC as the real party in interest. Paper 8, 1 (Patent Owner's Mandatory Notices); IPR2024-00943, Paper 8, 1 (Patent Owner's Mandatory Notices).

C. Related Matters

Petitioner indicates that "[t]he '541 patent is, or has been, involved" in the following proceedings:

1. *Headwater Research LLC v. Verizon Communications Inc.*, 2:23-cv-00352 (E.D. Tex. Jul. 28, 2023)
2. *Headwater Research LLC v. AT&T Inc.*, 2:23-cv-00397 (E.D. Tex. Sept. 1, 2023)
3. *Headwater Research LLC v. AT&T Inc.*, 2:23-cv-00398 (E.D. Tex. Sept. 1, 2023)
4. *Headwater Research LLC v. T-Mobile US, Inc.*, 2:23-cv-00377 (E.D. Tex. Aug. 21, 2023)
5. *Headwater Research LLC v. T-Mobile US, Inc.*, 2:23-cv-00379 (E.D. Tex. Aug. 21, 2023).

Pet. 82; 943Pet. 91. Petitioner further states that above proceedings 2 and 3 have been consolidated and above proceedings 4 and 5 have been consolidated. Pet. 82, nn.4–5; 943Pet. 91, nn.4–5.

Patent Owner identifies the above proceedings (but omitting proceedings 3 and 5) and additionally identifies the following PTAB proceeding:

1. *Google LLC v. Headwater Research LLC*, IPR2024-00944 (PTAB).

Paper 8, 1; IPR2024-00943, Paper 8, 1. We take Official Notice that we did not institute trial in that *inter partes* review proceeding. IPR2024-00944, Paper 17 (Institution Decision).

D. The '541 patent (Ex. 1001)

The '541 patent is titled "Device-Assisted Services for Protecting Network Capacity" and relates to software "of a wireless end-user device" aimed at addressing the "growing digital networking demand" for "user capacity" without "degrad[ing] overall network service experience" (e.g., without overly "consum[ing] the available [network] capacity"). Ex. 1001, codes (54), (57), 7:35–55.

Figure 14 is reproduced below.

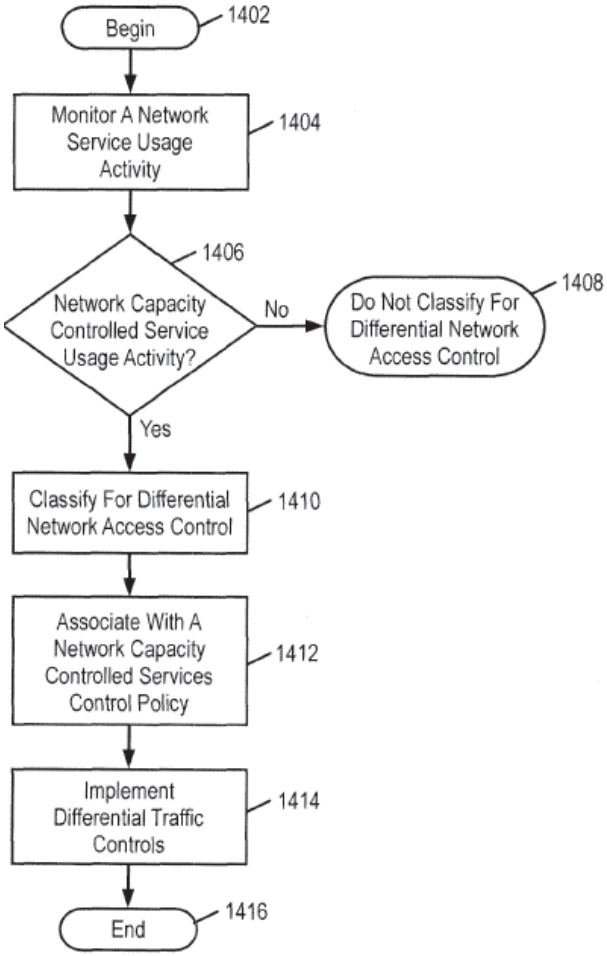

Figure 14 "illustrates a flow diagram for device assisted services (DAS) for protecting network capacity." Ex. 1001, 8:47–49; *see also id.* at 69:5–38 (describing Figure 14 in detail).

Step 1402 begins the process. Ex. 1001, 69:7. Step 1404 monitors the network service usage activity of a wireless network device. *Id.* at 69:7–10. Step 1406 determines whether the monitored network service usage activity is a network capacity controlled service. *Id.* at 69:10–12. If the answer is no, then at step 1408, "the network service usage activity is not classified for differential network access control." *Id.* at 69:12–15. But, if the answer is yes, then "the network service usage activity is classified (e.g., into one or more network capacity controlled services) for differential network access control for protecting network capacity." *Id.* at 69:15–20. The "classifying the network service usage activity includes classifying the network service usage activity into one or more of a plurality of classification categories for differential network access control for protecting network capacity," such as "a background services classification and/or a background priority state classification." *Id.* at 69:20–27. Based on the particular classification of the network service usage activity for differential network access control (e.g., "background services classification"), step 1412 associates the network service usage activity with a network capacity controlled services control policy to facilitate differential network access control for protecting network capacity. *Id.* at 69:28–32. Step 1414 implements differential network access control for protecting network capacity by implementing different traffic controls for all or some of the network service usage activities (e.g., based on a network busy state or

another criteria/measure). *Id.* at 69:33–37. Step 1416 completes the process. *Id.* at 69:37–38.

Figure 18 is reproduced below.

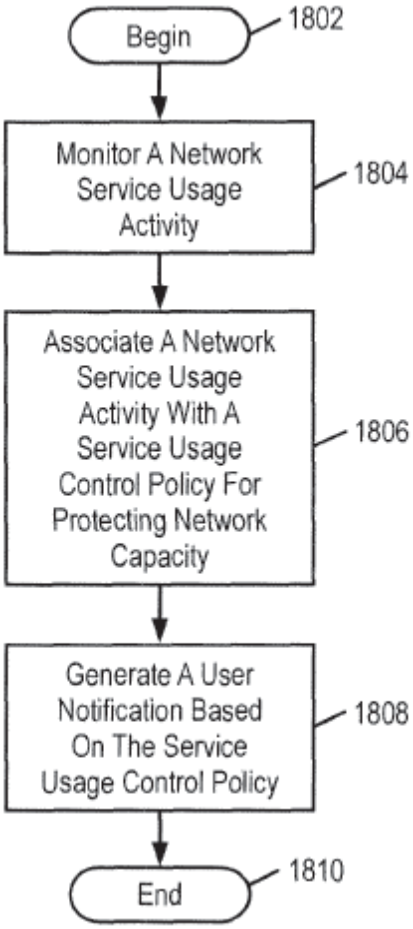

Figure 18 "illustrates another flow diagram for device assisted services (DAS) for protecting network capacity." Ex. 1001, 8:59–61; *see also id.* at 70:57–71:3 (describing Figure 18). Step 1802 begins the process. *Id.* at 70:59. Step 1804 monitors the network service usage activities of a wireless network device. *Id.* at 70:59–61. Step 1806 associates a network service usage activity (e.g., a network capacity controlled service) with a service usage control policy (e.g., a network capacity controlled services policy) based on a classification of the network service usage activity for differential

network access control for protecting network capacity. *Id.* at 70:61–71:1. Step 1808 generates a user notification based on the service usage control policy. *Id.* at 71:1–2. Step 1810 completes the process. *Id.* at 71:2–3.

E. Illustrative Claim

Claim 1 was the only independent claim. Claim 3 depends from independent claim 1 and is illustrative of the claimed invention. Claims 1 and 3 are reproduced below.

> 1. [1a] A non-transitory computer-readable storage medium storing machine-executable instructions that, when executed by one or more processors of a wireless end-user device, cause the one or more processors to:
>
> [1b] identify a service usage activity of the wireless end-user device, the service usage activity being associated with a first software component of a plurality of software components on the wireless end user device,
>
> [1c] the service usage activity comprising one or more prospective or successful communications over a wireless network;
>
> [1d] determine whether the service usage activity comprises a background activity;
>
> [1e] determine at least an aspect of a policy based on a user input obtained through a user interface of the wireless end-user device or based on information from a network element,
>
> [1f] the policy to be applied if the service usage activity is the background activity, the policy at least for controlling the service usage activity; and
>
> [1g] if it is determined that the service usage activity is the background activity, apply the policy.
>
> 3. The non-transitory computer-readable storage medium recited in claim 1, wherein the one or more prospective or successful communications over the wireless network

> comprise a communication associated with a network access, background signaling, a cloud synchronization service, an information feed, a download, an e-mail, a chat client, a security update, a peer-to-peer networking application update, a report of a behavior associated with the wireless end-user device, or a combination of these.

Ex. 1001, 110:14–31, 110:39–47 (bracketed material reflects limitations as argued by Petitioner (Pet. viii–ix)).

F. Prior Art and Asserted Grounds

Petitioner asserts that the challenged claims would have been unpatentable on the following grounds:

Claim(s) Challenged	35 U.S.C. §[3]	Reference(s)/Basis
3–6, 8–23, 26, 45, 49, 50, 58–60, 64, 157, 165, 169, 171	102	Rao[4]
3–6, 8–23, 26, 45, 49, 50, 58–60, 64, 157, 165, 169, 171	103(a)	Rao
1, 2, 7, 41–43, 46, 63, 91–96, 99, 102–138, 140–152, 155, 156, 158–164, 166–168, 170	103(a)	Rao, Fadell[5]
44, 47, 48, 51–57	103(a)	Rao, Freund[6]

[3] The Leahy-Smith America Invents Act ("AIA") included revisions to 35 U.S.C. §§ 102 and 103 that became effective on March 16, 2013. Because the '541 patent has an application filing date of May 11, 2011, we apply the pre-AIA version of the statutory basis for unpatentability. *See* Ex. 1001, code (22).

[4] US 2006/0039354 A1, published Feb. 23, 2006 (Ex. 1002).

[5] US 2010/0017506 A1, published Jan. 21, 2010 (Ex. 1003).

[6] US 5,987,611, issued Nov. 16, 1999 (Ex. 1004).

Claim(s) Challenged	35 U.S.C. §[3]	Reference(s)/Basis
97, 98, 100, 101, 139	103(a)	Rao, Fadell, Freund

Petitioner also relies on the testimony of Andrew Wolfe, Ph.D. (Ex. 1015). Dr. Wolfe was not cross-examined.

II. ANALYSIS

A. *Legal Standards*

1. Anticipation

A patent claim is unpatentable under 35 U.S.C. § 102 if "the four corners of a single, prior art document describe every element of the claimed invention, either expressly or inherently, such that a person of ordinary skill in the art could practice the invention without undue experimentation." *Advanced Display Sys., Inc. v. Kent State Univ.*, 212 F.3d 1272, 1282 (Fed. Cir. 2000). "A single prior art reference may anticipate without disclosing a feature of the claimed invention if such feature is necessarily present, or inherent, in that reference." *Allergan, Inc. v. Apotex Inc.*, 754 F.3d 952, 958 (Fed. Cir. 2014). Moreover, the reference must also "disclose[] within the four corners of the document not only all of the limitations claimed but also all of the limitations arranged or combined in the same way as recited in the claim." *Net MoneyIN, Inc. v. Verisign, Inc.*, 545 F.3d 1359, 1371 (Fed. Cir. 2008). However, "the reference need not satisfy an *ipsissimis verbis* test." *In re Gleave*, 560 F.3d 1331, 1334 (Fed. Cir. 2009).

2. Obviousness

In *Graham v. John Deere Co. of Kansas City*, 383 U.S. 1 (1966), the Supreme Court set out a framework for assessing obviousness under 35 U.S.C. § 103 that requires consideration of four factors: (1) the "level of ordinary skill in the pertinent art," (2) the "scope and content of the prior

art," (3) the "differences between the prior art and the claims at issue," and (4) if in evidence, "secondary considerations" of non-obviousness such as "commercial success, long-felt but unsolved needs, failure of others, etc." *Id.* at 17–18. "While the sequence of these questions might be reordered in any particular case," *KSR Int'l Co. v. Teleflex Inc.*, 550 U.S. 398, 407 (2007), the U.S. Court of Appeals for the Federal Circuit has repeatedly emphasized that "it is error to reach a conclusion of obviousness until all those factors are considered," *WBIP, LLC v. Kohler Co.*, 829 F.3d 1317, 1328 (Fed. Cir. 2016). Because Patent Owner does not address objective evidence of non-obviousness, we focus solely on the first three *Graham* factors.

B. Level of Ordinary Skill in the Art

The level of ordinary skill in the pertinent art at the time of the invention is a factor in how we construe patent claims. *See Phillips v. AWH Corp.*, 415 F.3d 1303, 1312–13 (Fed. Cir. 2005) (en banc). It is also one of the factors we consider when determining whether a patent claim is obvious over the prior art. *See Graham*, 383 U.S. at 17–18.

Factors pertinent to a determination of the level of ordinary skill in the art include "(1) the educational level of the inventor; (2) type of problems encountered in the art; (3) prior art solutions to those problems; (4) rapidity with which innovations are made; (5) sophistication of the technology; and (6) educational level of active workers in the field." *Envtl. Designs, Ltd. v. Union Oil Co. of Cal.*, 713 F.2d 693, 696–97 (Fed. Cir. 1983) (citing *Orthopedic Equip. Co. v. All Orthopedic Appliances, Inc.*, 707 F.2d 1376, 1381–82 (Fed. Cir. 1983)). "Not all such factors may be present in every

case, and one or more of these or other factors may predominate in a particular case." *Id.*

Petitioner argues that a person having ordinary skill in the art "would have at least a bachelor's degree in computer science, computer engineering, or a similar field, and approximately two years of industry or academic experience in a field related to computer software development and/or computer networking." Pet. 2 (citing Ex. 1015 ¶¶ 50–52). Petitioner further argues that "[w]ork experience can substitute for education, and additional education can substitute for work experience." *Id.* at 2–3 (citing Ex. 1015 ¶¶ 50–52).

Because Petitioner's proposed level of ordinary skill in the art is consistent with the field of the invention of the '541 patent and not disputed by Patent Owner (*see* PO Resp.), we adopt Petitioner's formulation of the person having ordinary skill in the art.

C. Claim Construction

We apply the same claim construction standard used in the federal courts, in other words, the claim construction standard that would be used to construe the claim in a civil action under 35 U.S.C. § 282(b), which is articulated in *Phillips v. AWH Corp.*, 415 F.3d 1303 (Fed. Cir. 2005) (en banc). *See* 37 C.F.R. § 42.100(b). Under the *Phillips* standard, the "words of a claim 'are generally given their ordinary and customary meaning,'" which is "the meaning that the term would have to a person of ordinary skill in the art in question at the time of the invention, i.e., as of the effective filing date of the patent application." *Phillips*, 415 F.3d at 1312–13.

Petitioner states "[n]o terms require construction to resolve this Petition." Pet. 3. Patent Owner does not propose any claim constructions. *See* PO Resp.

For the purposes of this Decision, we need not expressly construe any claim terms. *See Nidec Motor Corp. v. Zhongshan Broad Ocean Motor Co.*, 868 F.3d 1013, 1017 (Fed. Cir. 2017) (noting that "we need only construe terms 'that are in controversy, and only to the extent necessary to resolve the controversy'" (quoting *Vivid Techs., Inc. v. Am. Sci. & Eng'g, Inc.*, 200 F.3d 795, 803 (Fed. Cir. 1999))).

D. Anticipation and Obviousness of Claims 3–6, 8–23, 26, 45, 49, 50, 58–60, 64, 157, 165, 169, and 171 by Rao

1. Overview of Rao

Rao is titled "Systems and Methods for Client-Side Application-Aware Prioritization of Network Communications." Ex. 1002, code (54). Rao's invention "generally relates to optimizing peer-to-peer network communications, and in particular, to techniques for application-aware prioritizations of network communications on a client." *Id.* ¶ 2.

Rao identifies a problem of processing network communications in the order that communications are generated by client applications of a user's device. Ex. 1002 ¶ 3. As an example, Rao states that "although an application is running in the foreground and currently in active use by the user, a network packet [earlier] generated or received for an application running in the background may be processed ahead of a network packet generated or received for the application running in the foreground." *Id.*

Figure 1C is reproduced below.

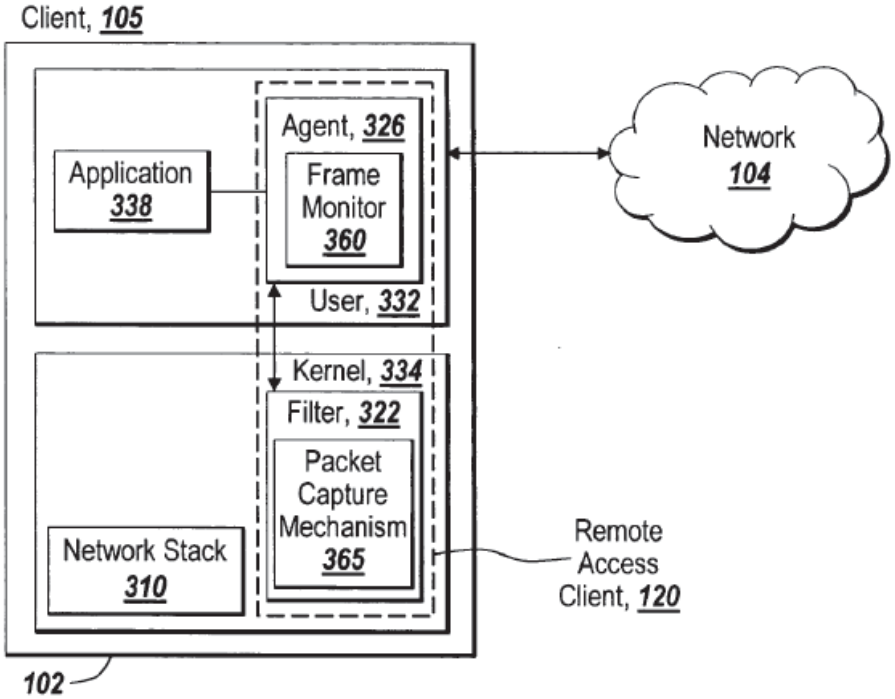

Figure 1C illustrates "a block diagram . . . of a remote access client . . . for network communications." Ex. 1002 ¶ 62. Figure 1C also illustrates a computing device 102 operating as client 105 via network 104 and including user space 332 and kernel space 334. *Id.* ¶ 99. User space 332 includes application 338, agent 326, and frame monitor 360 (of the agent 326) having logic that applies policies to received network packets. *Id.* ¶¶ 99, 108. Kernel space 334 includes network stack 310, filter 322 that determines action taken upon packets, and packet capture mechanism (PCM) 365 (of filter 322) that intercepts network packets. *Id.* ¶¶ 99–104, 180.

Agent 326 and filter 322 form the remote access client (RAC) 120. Ex. 1002 ¶ 99. Agent 326 provides RAC 120 a filtering table that PCM 365 of RAC 120 uses to selectively intercept/forward outbound network packets to frame monitor 360 of agent 326. *Id.* ¶ 104.

Figure 5A is reproduced below.

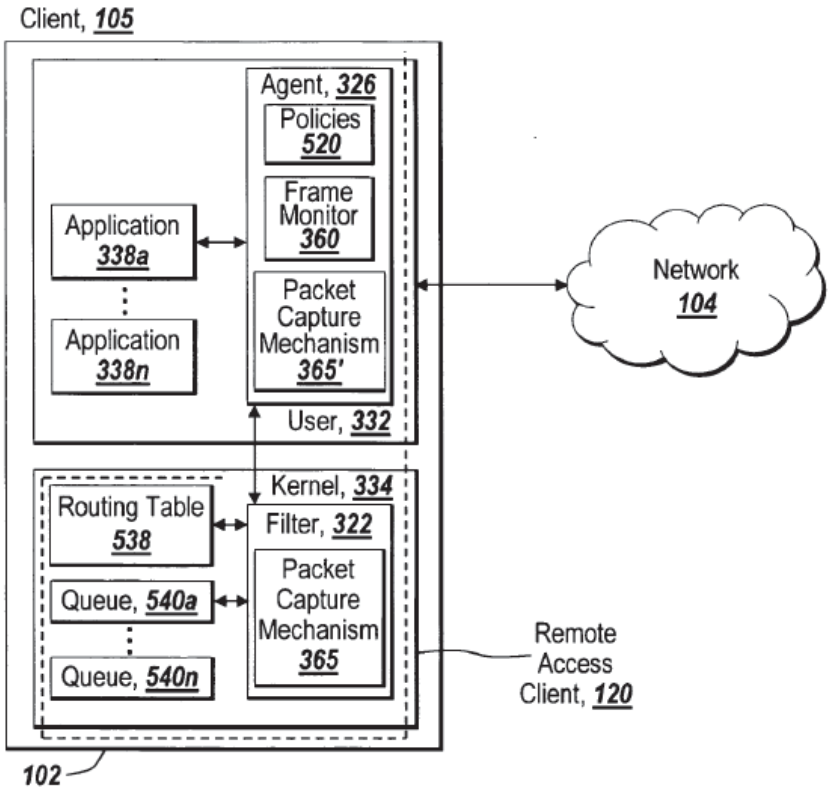

Figure 5A illustrates "block diagram depicting an environment of a client for providing client-side application-aware prioritization techniques." Ex. 1002 ¶ 70. Figure 5A shows client computing device 102, 105 similar, but not identical to, the one shown in Figure 1A. *Compare* Fig. 5A, *with* Fig. 1A.

Unlike in the Figure 1A embodiment, RAC 120 of the kernel space 334 includes queues 540a–540n that queue and prioritize network packets intercepted by PCM 365. *Id.* ¶ 180. Queues 540a–540n are associated with respective applications 338a–338n of the client 105 and organized by levels of priority, e.g., high, medium, low. *Id.* Routing table 538 dictates how agent 326 routes the network packets. *Id.* ¶ 181.

Further, unlike in the Figure 1A embodiment, RAC 120 of user space 332 includes policies 520 specifying client-side prioritizations of network packets generated by the applications 338a–338n. Ex. 1002 ¶ 182. For

example, the policies may prioritize, based on the respective communication protocols of applications 338a–338n, the payload sizes of the network packets, and/or whether a given application is running in the foreground or background of client 105. *Id.*

Figure 5B is reproduced below.

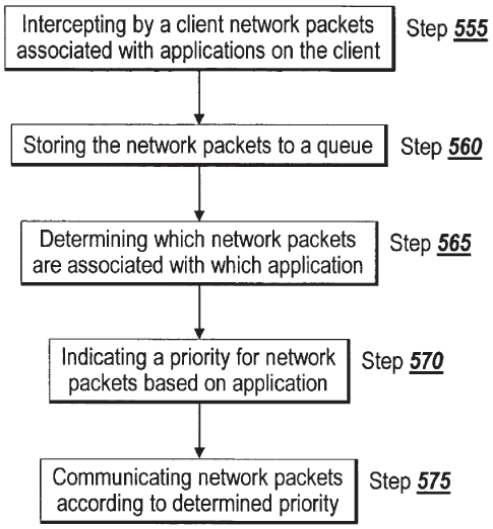

Figure 5B illustrates "a flow diagram depicting . . . [the] client-side application-aware prioritization" (Ex. 1002 ¶ 71) of the Figure 1A and Figure 5A embodiments (*id.* ¶ 184). Step 555 intercepts a network packet generated by one of applications 338a–338n. *Id.* Step 560 stores the intercepted network packet to one of queues 540a–540n. *Id.* Step 565 determines a priority of the intercepted, queued network packet based on the priority for the respective one of applications 338a–338n. *Id.* Steps 570 and 575 respectively indicate the determined priority for the network packet and accordingly communicate the network packet. *Id.*

2. Analysis of Claim 3 (Anticipation)

a) Limitation 1a: The Preamble[7]

The preamble of claim 1 recites "[a] non-transitory computer-readable storage medium storing machine-executable instructions that, when executed by one or more processors of a wireless end-user device, cause the one or more processors to." Ex. 1001, 110:14–17. Petitioner argues that Rao discloses the preamble. Pet. 7; *see also* Ex. 1015 ¶¶ 68–73.

After reviewing Petitioner's arguments and information regarding the preamble, including the Wolfe Declaration, which are not substantively addressed by Patent Owner (PO Resp. 1), we are persuaded that Petitioner sufficiently demonstrates that Rao discloses the preamble of claim 1.[8] Our specific findings are set forth below.

Rao discloses "computing device 102" which includes a central processing unit and a main memory. Ex. 1002 ¶ 118, Figs. 1D–1E. Computing device 102 includes storage 120 which stores, *inter alia*, remote access client software 120. *Id.* at Fig. 1D. A person having ordinary skill in the art would have understood that computing device 102 may be a wireless device. Ex. 1015 ¶ 72 ("[C]omputing device 102 may include a network interface 118 to interface to a Local Area Network (LAN), ***Wide Area Network (WAN)*** or the Internet through a variety of connections including, but not limited to, standard telephone lines, LAN or ***WAN links*** (e.g.,

---

[7] Because claim 3 depends from claim 1, our analysis includes the limitations set forth in claim 1.

[8] Because Petitioner has sufficiently shown that the prior art discloses the preamble, we need not determine at this time whether the preamble is limiting. *See Nidec*, 868 F.3d at 1017.

802.11, T1, T3, 56 kb, X.25), broadband connections (e.g., ISDN, Frame Relay, ATM), ***wireless connections***, or some combination of any or all of the above." (quoting Ex. 1002 ¶ 125)); *see also* Ex. 1002 ¶ 100 (describing the use of a wireless protocol).

b) Limitation 1b: Identifying a Service

Limitation 1b recites "identify a service usage activity of the wireless end-user device, the service usage activity being associated with a first software component of a plurality of software components on the wireless end-user device." Ex. 1001, 110:17–21. Petitioner argues Rao discloses that limitation. Pet. 7–10; *see also* Ex. 1015 ¶¶ 74–83.

After reviewing Petitioner's arguments and information regarding the limitation 1b, including the Wolfe Declaration, which are not substantively addressed by Patent Owner (PO Resp. 1), we are persuaded that Petitioner sufficiently demonstrates that Rao discloses limitation 1b. Our specific findings are set forth below.

Rao discloses network packets which are communicated over the wireless network. *See, e.g.*, Ex. 1002 ¶¶ 41–46, 101–106, Figs. 1A, 1B, 5A, 5B. A person having ordinary skill in the art would have understood such packets to be "a service usage activity." Ex. 1015 ¶ 83. Those network packets are associated with one of the applications 338a–338n (a first software component) of a wireless end-user device. Ex. 1002 ¶¶ 179, 184, 188, Fig. 5A; Ex. 1015 ¶¶ 76–77.

Rao further discloses identifying those network packets (service usage activity). Ex. 1015 ¶¶ 78–82. Specifically, Rao discloses intercepting the network packets, storing them in a queue, and determining with what

application each is associated. Ex. 1002 Fig. 5B (steps 555, 560, and 565), ¶¶ 185–188; *see also* Ex. 1002 ¶¶ 78–82. A person having ordinary skill in the art "would have understood that inspecting and associating a network packet is identifying a packet and its contents, or that at a minimum inspecting and associating a network packet requires identifying a network packet." Ex. 1015 ¶ 82.

c) Limitation 1c: Prospective or Successful Communication

Limitation 1c recites "the service usage activity comprising one or more prospective or successful communications over a wireless network." Ex. 1001, 110:21–23. Petitioner argues Rao discloses that limitation. Pet. 10–11; *see also* Ex. 1015 ¶¶ 84–86.

After reviewing Petitioner's arguments and information regarding the limitation 1c, including the Wolfe Declaration, which are not substantively addressed by Patent Owner (PO Resp. 1), we are persuaded that Petitioner sufficiently demonstrates that Rao discloses limitation 1c. Our specific findings are set forth below.

Rao discloses that "remote access client 120" "intercept[s] network traffic of any of the applications 338*a*-338*n* of the client 105," where remote access client 120 of computing device 102 "is connected to network 104." Ex. 1002 ¶¶ 180 (first two quotations), 179 (last quotation). That can include a wireless network. Ex. 1002 ¶ 125. Rao further discloses that "packet capture mechanism 365" may "obtain inbound and/or outbound packets of the client 105, such as the network traffic associated with application 338." *Id.* ¶ 110; *see also id.* ¶ 185 ("Any inbound and/or

outbound network packets of an application 338a-338n may be intercepted by the remote access client 120 of the present invention.”).

A person having ordinary skill in the art would have understood that “Rao’s intercepting, inspecting, and/or storing network packets associated with network 104 in queues before communicating them from the queues teaches identifying one or more ***prospective*** communications over a wireless network.” Ex. 1015 ¶ 86 (citing Ex. 1002 ¶ 184). Additionally, a person having ordinary skill in the art would have also understood that “Rao’s intercepting ‘inbound . . . [network packets] of the client 105 . . . associated with application 338’ teaches identifying one or more successful communications over a wireless network.” *Id.* (quoting Ex. 1002 ¶ 184).

d) Limitation 1d: Determining Background Activity

Limitation 1d recites “determine whether the service usage activity comprises a background activity.” Ex. 1001, 110:23–24. Petitioner argues Rao discloses that limitation. Pet. 11–13; *see also* Ex. 1015 ¶¶ 87–90.

After reviewing Petitioner’s arguments and information regarding the limitation 1d, including the Wolfe Declaration, which are not substantively addressed by Patent Owner (PO Resp. 1), we are persuaded that Petitioner sufficiently demonstrates that Rao discloses limitation 1d. Our specific findings are set forth below.

Rao discloses that after intercepting the network packets, remote access client 120 “determines the association of network packets with applications 338a-338n in order to determine priorities and apply any priority based policies 520.” Ex. 1002 ¶ 187; *see also id.* at Fig 5B (step 565: “Determining which network packets are associated with each

application"). This includes "determin[ing] whether the application 338a-338n associated with the network packet is running in the foreground or the background of the client 105." *Id.* ¶ 188. A person having ordinary skill in the art would have understood that "by determining whether network packets are associated with an application 'running in the background,' Rao's remote access client 120 determines that the service usage activity associated with that application 'comprises a background activity.'" Ex. 1015 ¶ 89. A person having ordinary skill in the art would have further understood that "by determining whether network packets are associated with an application running in the background of client 105, Rao's remote access client 120 determines whether the service usage activity associated with a first software component comprises a background activity, as claimed." *Id.*

e) Limitation 1e: Determining an Aspect of a Policy

Limitation 1e recites "determine at least an aspect of a policy based on a user input obtained through a user interface of the wireless end-user device or based on information from a network element." Ex. 1001, 110:24–27. Petitioner argues Rao discloses that limitation. Pet. 13–15; *see also* Ex. 1015 ¶¶ 91–95.

After reviewing Petitioner's arguments and information regarding the limitation 1e, including the Wolfe Declaration, which are not substantively addressed by Patent Owner (PO Resp. 1), we are persuaded that Petitioner sufficiently demonstrates that Rao discloses limitation 1e. Our specific findings are set forth below.

Rao discloses that "remote access client 120 may have one or more policies 520 [(a policy)] for specifying client-side prioritization of network communications related to applications 338a-338n." Ex. 1002 ¶ 182. Rao further discloses that the policies may be "provided by or downloaded [to agent 326] via the gateway 340" (a network element) over network 104. *Id.* ¶ 183. In addition, Rao discloses that "a user" may "configur[e]" an aspect of a policy through "a user interface, graphical or otherwise, design[ed] and constructed for configuring or specifying the policies 520." *Id.* Rao further discloses that agent 326 is part of remote access client 120 (*id.* at Fig. 5A), which is a wireless end-user device (Section II.D.2.b, *supra*).

f) Limitation 1f: Policy for Background Activity

Limitation 1f recites "the policy to be applied if the service usage activity is the background activity, the policy at least for controlling the service usage activity." Ex. 1001, 110:27–29. Petitioner argues Rao discloses that limitation. Pet. 15–16; *see also* Ex. 1015 ¶¶ 97–101.

After reviewing Petitioner's arguments and information regarding the limitation 1f, including the Wolfe Declaration, which are not substantively addressed by Patent Owner (PO Resp. 1), we are persuaded that Petitioner sufficiently demonstrates that Rao discloses limitation 1f. Our specific findings are set forth below.

Rao discloses packet prioritization relating to network communications: "[T]he remote access client 120 may have one or more policies 520 for specifying client-side prioritization of network communications related to applications 338a-338n running on application." Ex. 1002 ¶ 182. "[T]he polices 520 [may] define prioritization based on

whether an application is running in the foreground or the background of the client 105." *Id.* "[T]he policies 520 may be specified conditionally, such as if one application 338a is running, a second application 338b may have a higher or lower priority." *Id.* As a result, "one or more queues 540a-540n may be used for network packets intercepted but not prioritized because a policy 520 does not . . . apply to the network packet, or the policies 520 indicate to ignore or not process the network packet for prioritization." *Id.* A person having ordinary skill in the art would have understood that Rao's policies "are conditional and apply based on the characteristics of the applications, such as whether the applications (and thus, the associated network communications/service usage activities) are running in the foreground or background." Ex. 1015 ¶ 100. Accordingly, Rao discloses "a policy to be applied if the service usage activity is the background activity." *Id.*

Rao further discloses that, after the network packets are prioritized in step 570, they are communicated "according to the determined priority" in step 575. Ex. 1002, Fig. 5B (steps 570 and 575), ¶¶ 189–195.

g) Limitation 1g: Applying to Policy

Limitation 1g recites "if it is determined that the service usage activity is the background activity, apply the policy." Ex. 1001, 110:29–31. Petitioner argues Rao discloses that limitation. Pet. 17–18; *see also* Ex. 1015 ¶¶ 106–109.

After reviewing Petitioner's arguments and information regarding the limitation 1g, including the Wolfe Declaration, which are not substantively addressed by Patent Owner (PO Resp. 1), we are persuaded that Petitioner

sufficiently demonstrates that Rao discloses limitation 1g. Our specific findings are set forth below.

Rao discloses that "agent 326 uses the policies 520 to apply a priority to network packets of applications 338a-338n in accordance with the prioritization rules specified or indicated by the policies 520," including those based on "characteristics . . . such as running in the foreground or background, to indicate priority for a network packet of the application." Ex. 1002 ¶ 189; *see also id.* at Fig. 5B (step 570). Rao further discloses that "the agent 326 indicates the priority to the filter 322 for management of network packet queues 540a-540n to apply the indicated priorities." *Id.* ¶ 190.

h) Claim 3

Claim 3 recites:

> The non-transitory computer-readable storage medium recited in claim 1, *wherein the one or more prospective or successful communications* over the wireless network comprise a communication associated with a network access, background signaling, a cloud synchronization service, an information feed, a download, *an e-mail*, a chat client, a security update, a peer-to-peer networking application update, a report of a behavior associated with the wireless end-user device, or a combination of these.

Ex. 1001, 110:39–47 (emphases added). Petitioner argues Rao discloses the additional limitation recited in claim 3. Pet. 19.

After reviewing Petitioner's arguments and information regarding the claim 3, including the Wolfe Declaration, which are not substantively addressed by Patent Owner (PO Resp. 1), we are persuaded that Petitioner

sufficiently demonstrates that Rao discloses the additional limitation recited in claim 3. Our specific findings are set forth below.

Rao states that "one or more of applications 338a-338n may provide email." Ex. 1002 ¶ 179; *see also id.* ¶ 192 ("In another embodiment, all networks packets for a type of application 338a-338n, such as an email or voice application."); Ex. 1015 ¶ 113. Additionally, as discussed above, Rao discloses that remote access client 120 intercepts, inspects, stores, and/or transmits network traffic and that the network traffic is associated with a wireless network. *See* II.D.2.c (discussing limitation 1(c)); *see also* Ex. 1002 ¶ 90 (disclosing that the client can communication over a gateway with a server running an application "providing email services such as Microsoft Exchange manufactured by the Microsoft Corporation of Redmond, Wash."); Ex. 1015 ¶¶ 112–113. Accordingly, a person having ordinary skill in the art "would have understood that Rao's communications would include the sending and receiving of emails, and that such communications would therefore 'comprise . . . communication[s] associated with' emails" as recited in claim 3. Ex. 1015 ¶ 113.

i) Conclusion Regarding Claim 3

For the reasons set forth above, Petitioner has shown by a preponderance of the evidence that claim 3 was anticipated by Rao.

3. Analysis of Claim 3 (Obviousness)

Petitioner also argues that claim 3 would have been obvious over Rao. Pet. 7–19. Patent Owner does not substantively address whether claim 3 would have been obvious over Rao. PO Resp. 1.

"[I]t is well settled that 'a disclosure that anticipates under § 102 also renders the claim invalid under § 103, for "anticipation is the epitome of obviousness."'" *Realtime Data, LLC v. Iancu*, 912 F.3d 1368, 1373 (Fed. Cir. 2019) (quoting *Connell v. Sears, Roebuck & Co.*, 722 F.2d 1542, 1548 (Fed. Cir. 1983)); *cf. Wasica Fin. GmbH v. Cont'l Auto. Sys., Inc.*, 853 F.3d 1272, 1278 n.3 (Fed. Cir. 2017) (noting that the Board's conclusion that a prior art reference rendered certain claims obvious "by virtue of its anticipation of them").

Therefore, because Petitioner shown by a preponderance of the evidence that claim 3 is anticipated by Rao, Petitioner has also shown by a preponderance of the evidence that the subject matter of claim 3 would have been obvious to a person having ordinary skill in the art.

4. Analysis of Claims 4–6, 8–19, 21–23, 45, 49, 50, 59, 60, 157, and 171

Petitioner argues that claims 4–6, 8–19, 21–23, 45, 49, 50, 59, 60, 157, and 171 are anticipated by Rao. Pet. 1, 19–39, 42. Petitioner's arguments are supported by citations to the prior art and the testimony of Dr. Wolfe. *See id.* We have reviewed Petitioner's arguments and evidence, agree with them, and, therefore, adopt Petitioner's arguments and evidence as our own.

Patent Owner does not substantively address whether claims 4–6, 8–19, 21–23, 45, 49, 50, 59, 60, 157, and 171 were anticipated by Rao. PO Resp. 1.

Accordingly, Petitioner has shown by a preponderance of the evidence that the subject matter of claims 4–6, 8–19, 21–23, 45, 49, 50, 59, 60, 157, and 171 were anticipated by Rao.

Petitioner also argues that claims 4–6, 8–19, 21–23, 45, 49, 50, 59, 60, 157, and 171 would have been obvious over Rao. Pet. 1, 19–39, 42. Patent Owner does not substantively address whether claims 4–6, 8–19, 21–23, 45, 49, 50, 59, 60, 157, and 171 would have been obvious over Rao. PO Resp. 1.

"[I]t is well settled that 'a disclosure that anticipates under § 102 also renders the claim invalid under § 103, for "anticipation is the epitome of obviousness."'" *Realtime Data*, 912 F.3d at 1373 (quoting *Connell*, 722 F.2d at 1548.

Therefore, because Petitioner shown by a preponderance of the evidence that claims 4–6, 8–19, 21–23, 45, 49, 50, 59, 60, 157, and 171 are anticipated by Rao, Petitioner has also shown by a preponderance of the evidence that the subject matter of claims 4–6, 8–19, 21–23, 45, 49, 50, 59, 60, 157, and 171 would have been obvious to a person having ordinary skill in the art.

5. Analysis of Claims 20, 26, 58, 64, 165, and 169

Petitioner argues that claim 20, 26, 58, 64, 165, and 169 would have been obvious to a person having ordinary skill in the art. Pet. 1, 30–31, 33–42. Petitioner's arguments are supported by citations to the prior art and the testimony of Dr. Wolfe. *See id.* We have reviewed Petitioner's arguments and evidence, agree with them, and, therefore, adopt Petitioner's arguments and evidence as our own.

Patent Owner does not substantively address claims 20, 26, 58, 64, 165, and 169. PO Resp. 1.

Accordingly, Petitioner has shown by a preponderance of the evidence that the subject matter of claims 20, 26, 58, 64, 165, and 169 would have been obvious to a person having ordinary skill in the art in light of Rao.

Petitioner also sets forth that claims 20, 26, 58, 64, 165, and 169 were anticipated by Rao. Pet. 1, 30–31, 33–42. We have reviewed Petitioner's arguments for each of those dependent claims. *See* Pet. 30–31, 33–42. For each of those dependent claims, the Petition appears to only argue a theory of obvious. That is, the Petition never states that the additional limitation is disclosed by Rao. *See id.*

For example, claim 26 depends from claim 1 and further recites "wherein the policy is based on a background service class." Ex. 1001, 112:49–52. We reproduce Petitioner's arguments directed to claim 26 below:

> Rao's policies 520 may "define prioritization" for network packets "based on whether an application ***is running in the foreground or the background***." [Ex. 1002] ¶ 182; *id.* ¶¶ 38–43, 180, 182, 188–89, 193, Figs. 5A, 5B. Each packet "may be placed and arranged in a priority order respective to all other . . . packets to provide a packet by packet prioritization across all applications 338a-338n and . . . network packets." *Id.* ¶ 191. It would have been obvious to determine and apply a policy assigning a specific priority to packets associated with background applications, supra [1e]-[1f], and Rao thus discloses or renders obvious assigning a priority to network communications based on whether they are characterized as background services (class of services associated with application(s) running in the background of client 105), EX-1015 ¶¶195-96; *supra* [1e], [1f].

Pet. 33–34. Although the Petition sets forth why the claim limitation would have been obvious, there is no discussion as to how the additional limitation

of claim 26—policy based on background class—is disclosed in Rao. *See id.* Similar arguments are presented for the other claims. *See* Pet. 30–31, 35–42.

Because the Petition does not sufficiently show how the additional limitations recited in claims 20, 26, 58, 64, 165, and 169 were disclosed by Rao, Petitioner has not shown by a preponderance of the evidence that claims 20, 26, 58, 64, 165, and 169 were anticipated by Rao.

E. Analysis of Remaining Claims

Petitioner argues that (1) claims 2, 7, 41–43, 46, 63, 91–96, 99, 102–138, 140–152, 155, 156, 158–164, 166–168, and 170 would have been obvious over Rao and Fadell ; (2) claims 44, 47, 48, and 51–57 would have been obvious over Rao and Freund; and (3) that claims 97, 98, 100, 101, and 139 would have been obvious over Rao, Fadell, and Freund. Pet. 1, 42–79; 943Pet. 1, 28–88. Petitioner's arguments are supported by citations to the prior art and the testimony of Dr. Wolfe. *See* Pet. 42–79; 943Pet. 28–88. We have reviewed Petitioner's arguments and evidence, agree with them, and, therefore, adopt Petitioner's arguments and evidence as our own.

Patent Owner does not substantively address claims 2, 7, 41–44, 46–48, 51–57, 63, 91–96, 99–152, 155, 156, 158–164, 166–168, and 170. PO Resp. 1; 943PO Resp. 1.

Accordingly, Petitioner has shown by a preponderance of the evidence that the subject matter of claims 2, 7, 41–44, 46–48, 51–57, 63, 91–96, 99–152, 155, 156, 158–164, 166–168, and 170 would have been obvious to a person having ordinary skill in the art based on the combination of (1) Rao and Fadell, (2) Rao and Freund, or (3) Rao, Fadell, and Freund.

III. CONCLUSION[9]

For the foregoing reasons, we conclude that Petitioner has demonstrated by a preponderance of the evidence the unpatentability of the challenged claims of the '541 patent. Specifically, Petitioner has shown by a preponderance of the evidence that claims 3–6, 8–19, 21–23, 45, 49, 50, 59, 60, 157, and 171 were anticipated by Rao; claims 3–6, 8–23, 26, 45, 49, 50, 58–60, 64, 157, 165, 169, 171 would have been obvious over Rao; claims 2, 7, 41–43, 46, 63, 155, 156, 160–164, 166–168, and 170 would have been obvious over Rao and Fadell; and claims 44, 47, 48, and 51–57 would have been obvious over Rao and Freund. However, Petitioner has not shown by a preponderance of the evidence that claims 20, 26, 58, 64, 165, and 169 were anticipated by Rao.

In summary:

[9] Should Patent Owner wish to pursue amendment of the challenged claims in a reissue or reexamination proceeding subsequent to the issuance of this decision, we draw Patent Owner's attention to the April 2019 *Notice Regarding Options for Amendments by Patent Owner Through Reissue or Reexamination During a Pending AIA Trial Proceeding*. *See* 84 Fed. Reg. 16,654 (Apr. 22, 2019). If Patent Owner chooses to file a reissue application or a request for reexamination of the challenged patent, we remind Patent Owner of its continuing obligation to notify the Board of any such related matters in updated mandatory notices. *See* 37 C.F.R. § 42.8(a)(3), (b)(2).

IPR2024-00942

Claim(s)	35 U.S.C. §	Reference(s)/Basis	Claim(s) Shown Unpatentable	Claim(s) Not Shown Unpatentable
3–6, 8–23, 26, 45, 49, 50, 58–60, 64, 157, 165, 169, 171	102(b)	Rao	3–6, 8–19, 21–23, 45, 49, 50, 59, 60, 157, 171	20, 26, 58, 64, 165, 169
3–6, 8–23, 26, 45, 49, 50, 58–60, 64, 157, 165, 169, 171	103(a)	Rao	3–6, 8–23, 26, 45, 49, 50, 58–60, 64, 157, 165, 169, 171	
2, 7, 41–43, 46, 63, 155, 156, 160–164, 166–168, 170	103(a)	Rao, Fadell	2, 7, 41–43, 46, 63, 155, 156, 160–164, 166–168, 170	
44, 47, 48, 51–57		Rao, Freund	44, 47, 48, 51–57	
Overall Outcome			2–23, 26, 41–60, 63, 64, 155–157, 160–171	

IPR2024-00943

Claim(s)	35 U.S.C. §	Reference(s)/Basis	Claim(s) Shown Unpatentable	Claim(s) Not Shown Unpatentable
91–96, 99, 102–138, 140–152, 158, 159	103(a)	Rao, Fadell	91–96, 99, 102–138, 140–152, 158, 159	
97, 98, 100, 101, 139	103(a)	Rao, Fadell, Freund	97, 98, 100, 101, 139	
Overall Outcome			91–152, 158, 159	

IV. ORDER

In consideration of the foregoing, it is hereby:

ORDERED that Petitioner has shown by a preponderance of the evidence that claims 2–23, 26, 41–60, 63, 64, 91–152, and 155–171 of the ’541 patent are unpatentable; and;

FURTHER ORDERED that because this is a Final Written Decision, parties to the proceeding seeking judicial review of the decision must comply with the notice and service requirements of 37 C.F.R. § 90.2.

IPR2024-00942
IPR2024-00943
Patent 8,589,541 B2

FOR PETITIONER:

Erika H. Arner
Daniel C. Tucker
Alexander M. Boyer
Cara E. Regan
FINNEGAN, HENDERSON, FARABOW, GARRETT & DUNNER, LLP
erika.arner@finnegan.com
daniel.tucker@finnegan.com
alexander.boyer@finnegan.com
cara.regan@finnegan.com

Patrick D. McPherson
Kevin P. Anderson
DUANE MORRIS LLP
pdmcpherson@duanemorris.com
kpanderson@duanemorris.com

FOR PATENT OWNER:

Reza Mirzaie
Dale Chang
James Milkey
Neil Rubin
Philip Wang
RUSS AUGUST & KABAT
rmirzaie@raklaw.com
dchang@raklaw.com
jmilkey@raklaw.com
nrubin@raklaw.com
pwang@raklaw.com