DocCode – SCORE

SCORE Placeholder Sheet for IFW Content

Application Number: 17572388 Document Date: 01/10/2022

The presence of this form in the IFW record indicates that the following document type was received in electronic format on the date identified above. This content is stored in the SCORE database.

Since this was an electronic submission, there is no physical artifact folder, no artifact folder is recorded in PALM, and no paper documents or physical media exist. The TIFF images in the IFW record were created from the original documents that are stored in SCORE.

- Drawing

At the time of document entry (noted above):

- USPTO employees may access SCORE content via DAV or via the SCORE web page.
- External customers may access SCORE content via PAIR using the Supplemental Content tab.

Form Revision Date: March 1, 2019

PTO/AIA/15 (10-17)
Approved for use through 11/30/2020. OMB 0651-0032
U.S. Patent and Trademark Office; U.S. DEPARTMENT OF COMMERCE
Under the Paperwork Reduction Act of 1995 no persons are required to respond to a collection of information unless it displays a valid OMB control number.

UTILITY PATENT APPLICATION TRANSMITTAL

(Only for new nonprovisional applications under 37 CFR 1.53(b))

Attorney Docket No.	105650-1292756
First Named Inventor	Kameshwar Durvasula
Title	Pool Cleaning System and Method to Automatically Clean Surfaces of a Pool...
Priority Mail Express® Label No.	Via EFS-Web

APPLICATION ELEMENTS

See MPEP chapter 600 concerning utility patent application contents.

ADDRESS TO: **Commissioner for Patents**
P.O. Box 1450
Alexandria, VA 22313-1450

1. [✓] **Fee Transmittal Form** (PTO/SB/17 or equivalent)
2. [ ] **Applicant asserts small entity status.** See 37 CFR 1.27
3. [ ] **Applicant certifies micro entity status.** See 37 CFR 1.29. Applicant must attach form PTO/SB/15A or B or equivalent.
4. [✓] **Specification** [*Total Pages* 18] Both the claims and abstract must start on a new page. *(See MPEP § 608.01(a) for information on the preferred arrangement)*
5. [✓] **Drawing(s)** (35 U.S.C. 113) [*Total Sheets* 4]
6. **Inventor's Oath or Declaration** [*Total Pages* 2] *(including substitute statements under 37 CFR 1.64 and assignments serving as an oath or declaration under 37 CFR 1.63(e))*
   a. [ ] Newly executed (original or copy)
   b. [✓] A copy from a prior application (37 CFR 1.63(d))
7. [✓] **Application Data Sheet** ** See note below.* See 37 CFR 1.76 (PTO/AIA/14 or equivalent)
8. **CD-ROM or CD-R** in duplicate, large table, or Computer Program (*Appendix*)
   [ ] Landscape Table on CD
9. **Nucleotide and/or Amino Acid Sequence Submission** (*if applicable, items a. – c. are required*)
   a. [ ] Computer Readable Form (CRF)
   b. [ ] Specification Sequence Listing on:
      i. [ ] CD-ROM or CD-R (2 copies); or
      ii. [ ] Paper
   c. [ ] Statements verifying identity of above copies

ACCOMPANYING APPLICATION PAPERS

10. [ ] **Assignment Papers** (cover sheet & document(s))
    Name of Assignee _____
11. [ ] **37 CFR 3.73(c) Statement** (*when there is an assignee*) [✓] **Power of Attorney**
12. [ ] **English Translation Document** (*if applicable*)
13. [ ] **Information Disclosure Statement** (PTO/SB/08 or PTO-1449)
    [ ] Copies of citations attached
14. [✓] **Preliminary Amendment**
15. [ ] **Return Receipt Postcard** (*MPEP § 503*) (*Should be specifically itemized*)
16. [ ] **Certified Copy of Priority Document(s)** (*if foreign priority is claimed*)
17. [ ] **Nonpublication Request** Under 35 U.S.C. 122(b)(2)(B)(i). Applicant must attach form PTO/SB/35 or equivalent.
18. [ ] **Other:** _____

***Note:** (1) Benefit claims under 37 CFR 1.78 and foreign priority claims under 1.55 **must** be included in an Application Data Sheet (ADS).
(2) For applications filed under 35 U.S.C. 111, the application must contain an ADS specifying the applicant if the applicant is an assignee, person to whom the inventor is under an obligation to assign, or person who otherwise shows sufficient proprietary interest in the matter. See 37 CFR 1.46(b).

19. CORRESPONDENCE ADDRESS

[✓] The address associated with Customer Number: 23370 **OR** [ ] Correspondence address below

Name					
Address					
City		State		Zip Code	
Country		Telephone		Email	

Signature	/Renae B. Wainwright/	Date	2022-01-10
Name (Print/Type)	Renae B. Wainwright	Registration No. (Attorney/Agent)	58961

This collection of information is required by 37 CFR 1.53(b). The information is required to obtain or retain a benefit by the public which is to file (and by the USPTO to process) an application. Confidentiality is governed by 35 U.S.C. 122 and 37 CFR 1.11 and 1.14. This collection is estimated to take 12 minutes to complete, including gathering, preparing, and submitting the completed application form to the USPTO. Time will vary depending upon the individual case. Any comments on the amount of time you require to complete this form and/or suggestions for reducing this burden, should be sent to the Chief Information Officer, U.S. Patent and Trademark Office, U.S. Department of Commerce, P.O. Box 1450, Alexandria, VA 22313-1450. DO NOT SEND FEES OR COMPLETED FORMS TO THIS ADDRESS. **SEND TO: Commissioner for Patents, P.O. Box 1450, Alexandria, VA 22313-1450.**
If you need assistance in completing the form, call 1-800-PTO-9199 and select option 2.

Privacy Act Statement

The **Privacy Act of 1974 (P.L. 93-579)** requires that you be given certain information in connection with your submission of the attached form related to a patent application or patent. Accordingly, pursuant to the requirements of the Act, please be advised that: (1) the general authority for the collection of this information is 35 U.S.C. 2(b)(2); (2) furnishing of the information solicited is voluntary; and (3) the principal purpose for which the information is used by the U.S. Patent and Trademark Office is to process and/or examine your submission related to a patent application or patent. If you do not furnish the requested information, the U.S. Patent and Trademark Office may not be able to process and/or examine your submission, which may result in termination of proceedings or abandonment of the application or expiration of the patent.

The information provided by you in this form will be subject to the following routine uses:

1. The information on this form will be treated confidentially to the extent allowed under the Freedom of Information Act (5 U.S.C. 552) and the Privacy Act (5 U.S.C 552a). Records from this system of records may be disclosed to the Department of Justice to determine whether disclosure of these records is required by the Freedom of Information Act.
2. A record from this system of records may be disclosed, as a routine use, in the course of presenting evidence to a court, magistrate, or administrative tribunal, including disclosures to opposing counsel in the course of settlement negotiations.
3. A record in this system of records may be disclosed, as a routine use, to a Member of Congress submitting a request involving an individual, to whom the record pertains, when the individual has requested assistance from the Member with respect to the subject matter of the record.
4. A record in this system of records may be disclosed, as a routine use, to a contractor of the Agency having need for the information in order to perform a contract. Recipients of information shall be required to comply with the requirements of the Privacy Act of 1974, as amended, pursuant to 5 U.S.C. 552a(m).
5. A record related to an International Application filed under the Patent Cooperation Treaty in this system of records may be disclosed, as a routine use, to the International Bureau of the World Intellectual Property Organization, pursuant to the Patent Cooperation Treaty.
6. A record in this system of records may be disclosed, as a routine use, to another federal agency for purposes of National Security review (35 U.S.C. 181) and for review pursuant to the Atomic Energy Act (42 U.S.C. 218(c)).
7. A record from this system of records may be disclosed, as a routine use, to the Administrator, General Services, or his/her designee, during an inspection of records conducted by GSA as part of that agency's responsibility to recommend improvements in records management practices and programs, under authority of 44 U.S.C. 2904 and 2906. Such disclosure shall be made in accordance with the GSA regulations governing inspection of records for this purpose, and any other relevant (*i.e.*, GSA or Commerce) directive. Such disclosure shall not be used to make determinations about individuals.
8. A record from this system of records may be disclosed, as a routine use, to the public after either publication of the application pursuant to 35 U.S.C. 122(b) or issuance of a patent pursuant to 35 U.S.C. 151. Further, a record may be disclosed, subject to the limitations of 37 CFR 1.14, as a routine use, to the public if the record was filed in an application which became abandoned or in which the proceedings were terminated and which application is referenced by either a published application, an application open to public inspection or an issued patent.
9. A record from this system of records may be disclosed, as a routine use, to a Federal, State, or local law enforcement agency, if the USPTO becomes aware of a violation or potential violation of law or regulation.

POOL CLEANING SYSTEM AND METHOD TO AUTOMATICALLY CLEAN SURFACES OF A POOL USING IMAGES FROM A CAMERA

CROSS-REFERENCE TO RELATED APPLICATION

[001] This patent application is a continuation of commonly owned U.S. Patent Application serial number 15/207,065, filed July 11, 2016, which is a continuation of U.S. Patent Application serial number 13/545,918, filed July 10, 2012 (now US Pat. No. 9,388,595), the content of which are incorporated by reference herein in their entirety.

BACKGROUND

[002] Manually cleaning the floor and sides of a swimming pool may be a tedious and time-consuming task. As a result, automated robotic pool cleaners have been developed. However, controlling and monitoring such automated robotic pool cleaners to insure that all portions of the pool surfaces are satisfactorily cleaned remains a challenge.

SUMMARY OF THE INVENTION

[003] The disadvantages heretofore associated with the prior art are overcome by the present invention of a pool cleaning system for cleaning debris from a submerged surface of a swimming pool comprising: a self-propelled pool cleaner having rotatably-mounted supports for supporting and guiding the cleaner on the pool surface; a filter configured to retain the debris collected from the submerged surface of the swimming pool; an electric motor for enabling the rotation of the rotatably-mounted supports on the pool surface; at least one camera to capture imagery of the pool surface; a controller, in electronic communication with the at least one camera, to determine a cleanliness characteristic of the pool surface on which the cleaner has passed based on the camera imagery and generate a control signal to direct movement of the cleaner based on the cleanliness characteristic of the pool surface; and a portable electronic device is configured to present a graphic on a display, the graphic depicting the submerged surface of the pool and those portions of the surface that remain uncleaned as the cleaner traverses the pool surface.

[004] In one aspect, the at least one camera is carried by the cleaner. In another aspect, the controller is carried by the cleaner. In still another aspect, the electric motor is mechanically connected to at least one of the rotatably-mounted supports.

WYBOTICS EX1006
Wybotics v. Zodiac
Page 004

[005] In yet another aspect, the controller is operable to execute one or more cleaning programs for cleaning the submerged surfaces of the pool. In one aspect, the control signal causes the cleaner to drive in a direction to clean a portion of the pool surface based on the cleanliness characteristic of the pool surface. Alternatively, the control signal causes the cleaner to steer in a direction to clean a portion of the pool surface based on the cleanliness characteristic of the pool surface. In another aspect, the control signal causes the cleaner to drive in a direction to re-clean a portion of the pool surface over which the cleaner has passed. Alternatively, the control signal causes the cleaner to steer in a direction to re-clean a portion of the pool surface over which the cleaner has passed.

[006] In one aspect, the captured imagery from the at least one camera is digitally processed by the controller to determine the cleanliness characteristic of the pool surface. Alternatively, the captured imagery from the at least one camera is digitally processed by a remote processor to determine the cleanliness characteristic of the pool surface.

[007] In another aspect, the system further comprises a dry station located remotely from the cleaner and in communication with the cleaner, wherein the dry station includes the controller. Alternatively, the system further comprises a dry station located remotely from the cleaner and in communication with the cleaner, wherein the controller is located remotely from the cleaner and the dry station. In still another aspect, the controller controls electric power provided to the electric motor.

[008] In one aspect, the control signal causes the cleaner to move in a direction of a portion of the pool surface to be cleaned based solely upon signals received from the camera. In another aspect, the control signal causes the cleaner to drive in a direction to clean a portion of the pool surface based on the cleanliness characteristic of the pool surface. Alternatively, the control signal causes the cleaner to steer in a direction to clean a portion of the pool surface based on the cleanliness characteristic of the pool surface. In yet another aspect, the control signal causes the cleaner to drive in a direction to re-clean a portion of the pool surface over

WYBOTICS EX1006
Wybotics v. Zodiac
Page 005

which the cleaner has passed. Alternatively, the control signal causes the cleaner to steer in a direction to re-clean a portion of the pool surface over which the cleaner has passed.

BRIEF DESCRIPTION OF THE DRAWINGS

[009] FIG. 1 is a schematic illustration of an example pool cleaning system.

[0010] FIG. 2 is a schematic illustration of an implementation of the pool cleaning system of FIG. 1.

[0011] FIG. 3 is a schematic illustration of an implementation of the pool cleaning system of FIG. 1.

[0012] FIG. 4 is a schematic illustration of an implementation of the pool cleaning system of FIG. 1.

[0013] FIG. 5 is a schematic illustration of an implementation of the pool cleaning system of FIG. 1.

[0014] FIG. 6 is a flow diagram of an example method that may be carried out with the pool cleaning system of FIG. 2-5.

[0015] FIG. 7 is a plan view of an example display with an example graphical depiction.

[0016] FIG. 8 is a plan view of another example display with an example graphical depiction.

[0017] FIG. 9 is a schematic illustration of an implementation of the pool cleaning system of FIG. 1 with an example pool cleaning vehicle.

[0018] FIG. 10 is a bottom perspective view of the example pool cleaning vehicle of the system of FIG. 9.

DETAILED DESCRIPTION OF THE EXAMPLE EMBODIMENTS

[0019] FIG. 1 schematically illustrates an example pool cleaning system 20. As schematically shown by FIG. 1, pool cleaning system 20 is adapted to clean submerged surfaces of a pool 22 containing a liquid 24. In particular, pool cleaning system 20 is adapted to clean at least a bottom or floor surface 26 of the pool 22 and possibly to additionally clean surfaces 28 of pool 22. As will be described hereafter, pool cleaning system facilitates the control and monitoring of a robotic pool cleaner to better assure that all portions of pool 22 are satisfactorily cleaned.

WYBOTICS EX1006
Wybotics v. Zodiac
Page 006

[0020] Pool cleaning system 20 comprises vehicle 30, cameras 32 and controller 42. Vehicle 30 comprises an automated powered device configured to travel adjacent to submerged or water containing surfaces of pool 20 (such as floor 26 and/or side surfaces 28) while cleaning such surfaces. In one implementation, vehicle 30 may include vacuum or suction devices, a liquid circulation system and a filter to draw debris, such as bacterial growth or plant growth, from such pool surfaces, wherein the drawn liquid containing such residue or foreign matter is filtered to collect the debris. In other implementations, vehicle30 may not collect such debris, wherein vehicle 30 merely loosens such debris on the pool surfaces such that the loosened or separated debris may be subsequently removed using the existing liquid filtering system of pool 22.

[0021] To assist in the loosening of debris, in one implementation, vehicle 30may additionally include a chemical dispenser to closely apply pool cleaning chemicals to the pool surfaces as the vehicle 30 traverses such surfaces. In one implementation, vehicle 30 may additionally or alternatively include one or more scrubbing members, such as active (driven) or passive (undriven or idling) brushes, to assist in the removal of residue or foreign matter from such pool surfaces. In yet another implementation, vehicle 30 may additionally or alternatively include liquid jets to assist in the loosening of debris.

[0022] To move along the submerged surfaces of pool 22, vehicle 30 includes one or more propulsion mechanisms. In one implementation, vehicle 30is propelled along the submerged pool surfaces using wheels, rollers, tracks or other surface contacting members powered by a motor and the like. Such wheels, rollers or tracks may themselves include the scrubbing members used to clean the surfaces. In one implementation vehicle 30 may also alternatively be propelled by means of the vacuum or liquid jets. The vacuum or liquid jets used for such propulsion nozzle facilitate loosening of debris for collection by vehicle 30. In other implementations, vehicle 30 may include other propulsion mechanisms.

[0023] Cameras 32 comprise devices configured to capture video or time lapse images of pool 22. In the example illustrated, cameras 32 are mounted on structures external to pool 22. In other words, cameras 32 are not submerged. In other implementations, cameras 32 may alternatively be mounted to vehicle 30. In the example illustrated, cameras 32 capture movement of vehicle 30 while vehicle 30 is submerged within pool 22. In other implementations, cameras 32 merely capture images of submerged surfaces 26, 28 of pool 22.

WYBOTICS EX1006
Wybotics v. Zodiac
Page 007

[0024] In the example illustrated, cameras 32 comprise cameras serving as part of a home or pool security system, wherein such cameras detect the presence of a person at pool 22 satisfying a predefined characteristic and wherein an alert is output upon the person's detected presence. For example, in one implementation, cameras 32 are utilized as part of a security system that detects when a person below a predefined age, such as a child, is present at pool 22 without a detected presence of a recognized adult. In another implementation, cameras 32 may detect the presence of an unauthorized person or intruder at pool 22. Identification of the person may be achieved by an off-site human or computerized monitoring system, wherein signals from cameras 32 are transmitted across a wide area network or may be achieved with software of controller 42 which includes facial recognition or other identification programming.

[0025] Because pool cleaning system 20 utilizes pre-existing cameras 32 provided as part of a security system or shares the use of cameras 32 with such a home or pool security system, pool cleaning system 20 is easier to set up, less complex and less expensive. In other implementations, pool cleaning system 20 may utilize dedicated cameras 22 independent of any cameras associated with a home, facility or pool security system. In such an alternative system, cameras 32 may be more precisely focused upon pool 22 and surfaces 26, 28 while also including appropriate lenses or modifications to account for glare, refraction and the like to better facilitate the capture of surfaces and vehicle 30 which are submerged.

[0026] Controller 42 comprises one or more processing units in communication with vehicle 30 and cameras 32. For purposes of this application, the term "processing unit" shall mean a presently developed or future developed processing unit that executes sequences of instructions contained in a memory. Execution of the sequences of instructions causes the processing unit to perform steps such as generating control signals. The instructions may be loaded in a random access memory (RAM) for execution by the processing unit from a read only memory (ROM), a mass storage device, or some other persistent storage. In other embodiments, hard wired circuitry may be used in place of or in combination with software instructions to implement the functions described. For example, controller 42 may be embodied as part of one or more application-specific integrated circuits (ASICs). Unless otherwise specifically noted, the controller is not limited to any specific combination of hardware circuitry and software, nor to any particular source for the instructions executed by the processing unit.

WYBOTICS EX1006
Wybotics v. Zodiac
Page 008

[0027] In one implementation, controller 42 communicates with vehicle 30 and cameras 32 entirely across a wired connection. In another implementation, controller 42 communicates with vehicle 30 and cameras 32 across a wireless connection, such as cross a local area network (LAN) or a wide area network (WAN) such as the Internet. One of limitation, controller 42 may communicate with vehicle 30 and cameras 32 using a combination of both wired and wireless communication connections.

[0028] Controller 42 is configured to generate control signals for steering vehicle 30 based upon signals received from cameras 32. In one implementation, controller 42 provides the sole steering directions for vehicle 30 using signals from cameras 32. Because vehicle 30 is precisely steered under the control of controller 42, rather than traveling in a random manner, entire summer surfaces of pool 22 may be more quickly and efficiently covered and cleaned. Because controller 42 provides the only steering instructions for vehicle 30 and utilizes signals from cameras 32, complex steering algorithms or codes in either vehicle 30 or controller 42 may be omitted to reduce complexity and cost of system 20.

[0029] In another implementation, vehicle 30 may cover or travel across surfaces of pool 22 in either a random fashion or according to an automated pool coverage algorithm or pool coverage pattern stored in a memory associated with vehicle 30 or controller 42. In such an implementation, controller 42 utilizes signals from cameras 32 to verify that all of the surfaces of pool 22 have been cleaned, that no spots have been missed. Upon identifying a missed spot, controller 42 utilizes signals from camera 32 to steer vehicle 32 over such missed portions of surfaces 26, 28. According to one example, controller 42 not only uses signals from camera 32 to determine whether any portions of surfaces 26, 28 have been missed entirely, but to also determine whether any portions of surfaces 26,28 have been cleaned, but not to a satisfactory degree or extent. In such circumstances, controller 42 uses signals from cameras 32 to steer vehicle 34 such areas to re-clean such portions until such portions have been satisfactorily cleaned such that the portions have a cleanliness characteristic satisfying a predefined threshold.

[0030] FIG. 2 schematically illustrates pool cleaning system 120, the particular example of pool cleaning system 20 described above. Pool cleaning system 120 is similar to pool cleaning system 20 except that pool cleaning system 120 additionally comprises dry station 46 and display 50. Those remaining components of pool cleaning system 120 which correspond to components of pool cleaning system 20 are numbered similarly.

WYBOTICS EX1006
Wybotics v. Zodiac
Page 009

[0031] Dry station 46 comprises a station in communication with vehicle 30 and cameras 32 outside of pool 22. Dry station 46 incorporates controller 42. In one implementation, dry station 46 communicates with vehicle 30 in a wired fashion. In such an implementation, dry station 46 further provides electrical power to vehicle 30 in a wired fashion. Dry station 46 communicates with cameras 32 and either a wired or wireless fashion.

[0032] Display 50 comprises a device to present a graphical images and text on a display screen. In one implementation, display 58 may be incorporated as part of dry station 46. In another implementation, display 50 may be provided on a portable electronic device, a computer, a television and the like. Display 50 is utilized by pool cleaning system 120 to present information regarding the cleaning of pool 22 to facilitate control of vehicle 30 by controller 42. In one implementation, display 50 is utilized by pool cleaning system 120 and a controller 42 to present a graphical depiction of those portions of surfaces 26, 28 of pool 22 have not been satisfactorily cleaned so as to satisfy a predefined cleanliness characteristic threshold. Such portions may comprise portions that have been completely missed by vehicle 30 as well as those portions that have been covered by vehicle 30 but have not been satisfactorily cleaned with the given number of passes of vehicle 30 or the existing cleaning settings of vehicle 30. The graphical depiction presented on display 50 enables a person view the quality of the prior cleaning session and to input commands causing controller 42 to generate control signals using signals from camera 32 to steer vehicle 30 back to such identified portions where such portions may be cleaned at the same or elevated cleaning aggressiveness settings.

[0033] Another implementation, display 50 may be further utilized by controller 42 to depict the progress of vehicle 30 in cleaning pool 22. Such a display 50 allows a person to visually determine how much of the pool has been currently cleaned and to estimate the remaining time before the pool cleaning task is completed. In certain circumstances, using display 50, a person may adjust a setting of vehicle 30 to accelerate a rate at which surfaces 26, 20 of pool 22 are cleaned to meet an earlier desired completion time for such pool cleaning.

[0034] FIG. 3 schematically illustrates pool cleaning system 220, another example implementation of pool cleaning system 20. Pool cleaning system 220 is similar to pool cleaning system 20 except that pool cleaning system 220 additionally comprises dry station 246, display 50, and remote server 254. Those remaining components of pool cleaning system 220 which

correspond to components of pool cleaning system 20 or pool cleaning system 120 are numbered similarly.

[0035] Dry station 246 is similar to dry station 46, described above, except that dry station 246 serves as a local interface for communication with controller 42 across a network 260. In one implementation, network 260 may comprise a local area network. In another implementation, network 260 may comprise a wide area network, such as the Internet. For example, in one implementation, dry station 246 may incorporate a modem. In one implementation, dry station 246 may communicate across a local area network to controller 42. In another implementation, dry station 246 may communicate through a router, across a local area network, to a local modem which communicates across a network 260. The example illustrated, dry station 246 further provides part of vehicle 30 across a wired cable or wired connection. Display 50 is described above with respect to system 120.

[0036] Remote server 254 comprises a server remote from dry station 246 which is in communication with dry station 246 across network 260. Remote server 254 includes controller 42. During operation, signals from cameras 32 are transmitted across dry station 246 across network 260 to controller 42 of remote server 254. Based upon such signals from cameras 32, controller 42 generates control signals which are transmitted back across network 260 and through dry station 246 to vehicle 30 to steer vehicle 30.

[0037] As shown by FIG. 3, remote server 254 and network 260 may be shared as part of other pool cleaning systems 320, wherein controller 42 generates control signals for steering the pool cleaning vehicle 30 of system 320 based upon signals from cameras 32 transmitted across dry station 246 of system 320. In such an implementation, the cost and complexity of pool cleaning system 220 is reduced since controller 42 is remotely provided at remote server 254 which services multiple pool cleaning systems 220,320. Upgrades to controller 42 and its software are also more easily achieved for all pool cleaning systems to 20, 320 and their pools 22, 222 being serviced. In one implementation, the supervised cleaning, inspection and possible re-cleaning facilitated by the use of cameras 32may be provided as part of a subscription to users of vehicle 30. In such an implementation, a pool 22 having security cameras 32 may be upgraded with appropriate software or an appropriate software module added to dry station 246 to make a network connection with controller 42 which directs the security cameras 32 to capture vehicle 30 utilizes such signals for steering vehicle 30.

WYBOTICS EX1006
Wybotics v. Zodiac
Page 011

[0038] FIG. 4 schematically illustrates pool cleaning system 420, another particular implementation of pool cleaning system 20. Pool cleaning system 420 is similar to pool cleaning system 120 except that pool cleaning system 420 additionally comprises a portable electronic device 464. Those remaining components of pool cleaning system 420 which correspond to components of pool cleaning system 120 are numbered similarly.

[0039] Portable electronic device 464 comprises a portable handheld electronic device in communication with controller 42 and/or dry station 46 across network 260. Examples of such a portable electronic device (PED) 300 include, but are not limited to, a smart phone, a personal data assistant (PDA), laptop, notebook computer, tablet computer (e.g. IPAD) and MP3 player (e.g., IPOD TOUCH). In the example illustrated, PED 464 comprises input 466 and display 468.

[0040] Input 466 serves as a user interface for PED 464 by which inputs are made to PED 464. Input 466 facilitates entry of inputs or commands by a person to cause controller 42 to generate control signals varying the control of vehicle30. In one implementation, input 466 comprise a keyboard. In other implementations, input 466 may comprise a touchpad, a stylus, a microphone with associated speech recognition software or programming, a touch screen, buttons, switches and the like. In some implementations, input 466 may comprise a touch screen incorporated as part of display 468.

[0041] Display 468 comprises a user interface by which graphical or textual data is presented to a user. Display 468 may present the same or similar information as presented at dry station 246 by display 50 as described above. In one implementation, display 468 comprises a liquid crystal display. In other implementations, display 468 may comprise other types of display technology such as a light emitting diode display, an organic light emitting diode display (OLED), an electronic ink (e-ink) display or other types of display technology in present use or developed in the future. Although system 420 is illustrated as including controller 422 is part of dry station 46, in some implementations, controller 42 may alternatively be located as part of PED 464.

[0042] PED 464 enables a person located remote from pool 22 to monitor the progress of the cleaning of pool 22 by vehicle 30 of system 420. PED 464 provides a person with a graphical presentation (described above with respect to display 50) indicating those portions of surfaces 26, 28 of pool 22 that have been completed as well as those portions 26, 20 and that remain to be cleaned. The person may also be provided with a graphical indication of what portions need to be

WYBOTICS EX1006
Wybotics v. Zodiac
Page 012

re-cleaned to meet predetermined cleanliness thresholds. In the example illustrated, input 466 enables a person to enter commands or selections which are transmitted across network 260 to controller 42 to adjust operation of vehicle 30. For example, the path or route of vehicle 30 may be changed, the aggressiveness of the cleaning chemicals or mechanical cleaning devices may be adjusted, the speed at which vehicle 30 traverses surfaces 26, 28 may be adjusted. In response to such adjustment signals from PED 464, controller 42 may utilize signals from cameras 32 to adjust the steering of vehicle 30.

[0043] FIG. 5 schematically illustrates pool cleaning system 520, another example implementation of pool cleaning system 20. Pool cleaning system 520 is similar to pool cleaning system 420 except that pool cleaning system 520 additionally comprises a remote server 554. Those remaining components of pool cleaning system 520 which correspond to components of pool cleaning system 420 are numbered similarly.

[0044] Remote server 554 is similar to remote server 254 described above with respect to system 220. Remote server 554 comprises a server remote from dry station 246 which is in communication with dry station 246 across network 260. Remote server 254 includes controller 42. During operation, signals from cameras 32 are transmitted across dry station 246 across network 260 to controller 42 of remote server 254. Based upon such signals from cameras 32, controller 42 generates control signals which are transmitted back across network 260 and through dry station 246 to vehicle 30 to steer vehicle 30. Controller 42 further relays either the raw signals from camera 32or image signals generated based upon signals from cameras 32 to PED 464, wherein such images (described above) are presented on display 468. As noted above, PED may further receive commands through input 466, wherein such commands are transmitted to controller 42 which generates control signals that are ultimately transmitted to vehicle 30 for steering vehicle 30.

[0045] As with remote server 254, remote server 554 and network 260 may be shared as part of other pool cleaning systems 320 (shown in FIG. 3), wherein controller 42 generates control signals for steering the pool cleaning vehicle 30 of system 320 based upon signals from cameras 32 transmitted across dry station 246 of system 320. In such implementations, controller 42 of remote server 554 may interact with other PEDs 464. In such an implementation, the cost and complexity of pool cleaning system 220 is reduced since controller 42 is remotely provided at remote server 254 which services multiple pool cleaning systems 220, 320. Upgrades to

WYBOTICS EX1006
Wybotics v. Zodiac
Page 013

controller 42and its software are also more easily achieved for all pool cleaning systems to 20, 320 and their pools 22, 222being serviced. In one implementation, the supervised cleaning, inspection and possible re-cleaning facilitated by the use of cameras 32 may be provided as part of a subscription to users of vehicle 30. In such an implementation, a pool 22 having security cameras 32 may be upgraded with appropriate software or an appropriate software module added to dry station 246 to make a network connection with controller 42 which directs the security cameras 32 to capture vehicle 30 utilizes such signals for steering vehicle 30. As indicated by broken lines, in other implementations, the controller 42 for generating control signals steering vehicle 30 based upon signals from cameras 32 may alternatively be relocated in PED 464.

[0046] FIG. 6 is a flow diagram illustrating an example method 600 that may be carried out by any of systems 120-520. As indicated by step 602, cameras 32 capture images of pool cleaning by vehicle 30. As indicated by step 604, controller 42 obtain such signals from cameras 32 for the surfaces of pool 22 that have been cleaned. As indicated by step 606, controller 42 uses information gathered from the signals from cameras 32 to identify those portions of surfaces 26, 28 not satisfactorily cleaned—not satisfying a predefined cleanliness characteristic or measurement threshold. One example of a cleanliness characteristic measurement a threshold may be how well the color of a surface matches a predetermined desirable color for the pool surface (such as original color of the tile or surface). A surface that has been missed entirely by vehicle 30 during a pool cleaning session may be automatically deemed to not satisfy a predetermined cleanliness characteristic.

[0047] As indicated by step 608, based upon such determinations, controller 42 generates control signals resulting in the presentation of a graphical depiction of those portions of pool 22 that has not been satisfactorily cleaned. Such graphical representations or depictions may be presented on display 50 or display 468. FIGS. 7 and 8 illustrate examples of graphical depictions that may be presented.

[0048] FIG. 7 illustrates display 468 presenting graphical depiction 620. Graphical depiction 620 comprises a first graphic 622 having a first portion 624 representing sides or walls 28 of pool 22 and a second portion 626 representing the floor 26 of pool 22. Graphical depiction 620 further comprises a moving icon 628 representing the current positioning of vehicle 30. In one implementation, the path of vehicle 30 may additionally be depicted by icon 628 shown in broken lines. As shown by FIG. 7, those portions 632 of surfaces 26, 28 of pool 22 (shown in

WYBOTICS EX1006
Wybotics v. Zodiac
Page 014

FIG. 1) over which of vehicle 30 has moved are identified by graphical depiction 620 either by color, markings or other various distinctive attributes. Likewise, those portions 634 of surfaces 26, 28 of pool 22 that have not been covered by vehicle 30 are identified by a distinct color col marking or distinctive attribute of depiction 620. As a result, a person may view the current position of vehicle 30, the extent to which pool 22 has been cleaned or covered by vehicle 30 and the extent of pool 22 that remains to be cleaned. In the example illustrated, depiction 620 further identifies those portions 638 of surfaces 26, 28 that have been cleaned, but which have not been cleaned to a satisfactory degree or extent. In one implementation, portions 638 may be identified by colors, brightness, markings or other visually distinctive attributes that are visually distinct from both portions 632 and portions 634. In other implementations, portions 638 may have the same characteristic of portions 634. In yet other implementations, different portions 638 may have different visual attributes depending upon a degree to which such clean portions have failed to satisfy the predefined cleanliness characteristic threshold. In some implementations, different port 638 may have different visual attributes depending upon different cleaning strategies that may be recommended for the different portions 638. For example, controller 42 may determine and recommend a first cleaning strategy (a first chemical solution jetted at a first rate and scrubbed at a first rate) with respect to a first portion 638 and may recommend a second different cleaning strategy (a second chemical solution jetted at a second rate is about a second rate) with respect to a second portion 638, wherein the different cleaning strategies are represented by different visual attributes presented in depiction 620.

[0049] FIG. 8 illustrates display 468 presenting a graphical depiction 720. Graphical depiction 720 comprises a first graphic 622 having a first portion 624 representing sides or walls 28 of pool 22 and a second portion 626 representing the floor 26 of pool 22 (shown in FIG. 1). Graphical depiction 720 is similar to graphical depiction 620 except that graphical depiction 720 omits icon 628 presenting vehicle 30. Like depiction 620, depiction 720 graphically depicts those portions 632 of surfaces 26, 28 over which vehicle 30 has traveled while in a cleaning mode. Depiction 720 also visually depicts those portions 634 that have not been covered by vehicle 30 in the cleaning mode and those portions 638 over which vehicle 30 has traveled while in the cleaning mode, but which have not been cleaned to a satisfactory degree. As illustrated in FIG. 8, different portions 638 may be visibly distinguished from one another through color, text or markings indicating either differences in the cleanliness of such portions 638 or indicating

different recommended cleaning strategies or approaches that may be selected by a person using input 466 when vehicle 30 is steered back to such portions 638 for re-cleaning using signals from camera 32.

[0050] As indicated by step 610 of FIG. 6, controller 42 generates control signals steering vehicle 30 to re-clean portions of pool 22, such as portions 638. Such steering may be facilitated by using signals from cameras 32. As noted above, in some implementations, a person may be allowed choose a cleaning approach for a particular portion 638using input 466. The selection may be facilitated by visual inspection of the different visual attributes for the particular portion 638 provided by depiction 720 (or depiction 620). In some implementations, input 466 may additionally be utilized by a person to prioritize an order in which portions 638 are re-cleaned.

[0051] FIG. 9 illustrates pool cleaning system 820, an example implementation of pool cleaning system 20. Pool cleaning system 820 is similar to pool cleaning system 520 except the pool cleaning system 820 located controller 42 in dry station 246 and includes pool cleaning vehicle 830, a specific example of vehicle 30. As shown by FIG. 9, in addition to transmitting control signals generated by controller 42 to vehicle 830, dry station 246 further transmits power from power source 831 through a power line or power cable 833 to vehicle 830. In the example illustrated, data communication and communication of control signals, also occurs across wired connections within or alongside the same line 833. In the example illustrated, remote server 554 serves as a communication link by which upgrades to controller 42 may be implemented across a wide number of pool cleaning systems and by which information from controller 42 is conveyed to one or more portable electronic devices 464 across network 260.

[0052] Vehicle 830 comprises a robotic or automated pool cleaning device. Vehicle 830 comprises a self-contained onboard filtration system with drive and pump motors. Vehicle 830 utilizes an internal microprocessor guided drive motor to systematically clean surfaces of pool 22. As shown by FIGS. 9 and 10, vehicle 830 utilizes a toothed track drive 900 provide traction and propulsion for vehicle 30. Vehicle 830 comprises rotating brushes 902 to loosen waterline buildup and breakdown large debris while power washing jets 904 flush out dirt from pores, seems in corners where brushes 902 may not be able to reach. The loosened dirt and debris is vacuumed through off-center vacuum ports 906 which passes the vacuumed debris through internally house filter bag. In the example illustrated, vehicle 830 further comprises rollers 908

which inhibit vehicle 830 from becoming impeded or stuck on raised drains or pop-up heads. Although illustrated as being employed with system 820, vehicle 830 may also be utilized with any of systems 20, 120, 220, 320 and 420. In other implementations, other robotic or automated pool cleaning vehicles may be utilized.

[0053] Although the present disclosure has been described with reference to example embodiments, workers skilled in the art will recognize that changes may be made in form and detail without departing from the spirit and scope of the claimed subject matter. For example, although different example embodiments may have been described as including one or more features providing one or more benefits, it is contemplated that the described features may be interchanged with one another or alternatively be combined with one another in the described example embodiments or in other alternative embodiments. Because the technology of the present disclosure is relatively complex, not all changes in the technology are foreseeable. The present disclosure described with reference to the example embodiments and set forth in the following claims is manifestly intended to be as broad as possible. For example, unless specifically otherwise noted, the claims reciting a single particular element also encompass a plurality of such particular elements.

WYBOTICS EX1006
Wybotics v. Zodiac
Page 017

What is claimed is:

1. A pool cleaning system for cleaning debris from a submerged surface of a swimming pool comprising:

a self-propelled pool cleaner having rotatably-mounted supports for supporting and guiding the cleaner on the pool surface;

a filter configured to retain the debris collected from the submerged surface of the swimming pool;

an electric motor for enabling the rotation of the rotatably-mounted supports on the pool surface;

at least one camera to capture imagery of the pool surface;

a controller, in electronic communication with the at least one camera, to determine a cleanliness characteristic of the pool surface on which the cleaner has passed based on the camera imagery and generate a control signal to direct movement of the cleaner based on the cleanliness characteristic of the pool surface; and

a portable electronic device configured to present a graphic on a display, the graphic depicting the submerged surface of the pool and those portions of the surface that remain uncleaned as the cleaner traverses the pool surface.

2. The system of claim 1, wherein the at least one camera is carried by the cleaner.

3. The system of claim 1, wherein the controller is carried by the cleaner.

4. The system of claim 1, wherein the electric motor is mechanically connected to at least one of the rotatably-mounted supports.

WYBOTICS EX1006
Wybotics v. Zodiac
Page 018

5. The system of claim 1, wherein the controller is operable to execute one or more cleaning programs for cleaning the submerged surfaces of the pool.

6. The system of claim 5, wherein the control signal causes the cleaner to drive in a direction to clean a portion of the pool surface based on the cleanliness characteristic of the pool surface.

7. The system of claim 5, wherein the control signal causes the cleaner to steer in a direction to clean a portion of the pool surface based on the cleanliness characteristic of the pool surface.

8. The system of claim 5, wherein the control signal causes the cleaner to drive in a direction to re-clean a portion of the pool surface over which the cleaner has passed.

9. The system of claim 5, wherein the control signal causes the cleaner to steer in a direction to re-clean a portion of the pool surface over which the cleaner has passed.

10. The system of claim 1, wherein the captured imagery from the at least one camera is digitally processed by the controller to determine the cleanliness characteristic of the pool surface.

11. The system of claim 1, wherein the captured imagery from the at least one camera is digitally processed by a remote processor to determine the cleanliness characteristic of the pool surface.

12. The system of claim 1 further comprising a dry station located remotely from the cleaner and in communication with the cleaner, wherein the dry station includes the controller.

13. The system of claim 1 further comprising a dry station located remotely from the cleaner and in communication with the cleaner, wherein the controller is located remotely from the cleaner and the dry station.

14. The system of claim 1, wherein the controller controls electric power provided to the electric motor.

15. The system of claim 1, wherein the control signal causes the cleaner to move in a direction of a portion of the pool surface to be cleaned based solely upon signals received from the camera.

16. The system of claim 15, wherein the control signal causes the cleaner to drive in a direction to clean a portion of the pool surface based on the cleanliness characteristic of the pool surface.

17. The system of claim 15, wherein the control signal causes the cleaner to steer in a direction to clean a portion of the pool surface based on the cleanliness characteristic of the pool surface.

18. The system of claim 15, wherein the control signal causes the cleaner to drive in a direction to re-clean a portion of the pool surface over which the cleaner has passed.

19. The system of claim 15, wherein the control signal causes the cleaner to steer in a direction to re-clean a portion of the pool surface over which the cleaner has passed.

ABSTRACT

[0054] A pool cleaning system for cleaning debris from a submerged surface of a swimming pool includes a self-propelled pool cleaner having rotatably-mounted supports for supporting and guiding the cleaner on the pool surface; an electric motor for enabling the rotation of the rotatably-mounted supports on the pool surface; at least one camera to capture imagery of the pool surface; a controller, in electronic communication with the at least one camera, to determine a cleanliness characteristic of the pool surface on which the cleaner has passed based on the camera imagery and generate a control signal to direct movement of the cleaner based on the cleanliness characteristic of the pool surface, and a portable electronic device configured to present a graphic on a display, the graphic depicting the submerged surface of the pool and those portions of the surface that remain uncleaned as the cleaner traverses the pool surface.

WYBOTICS EX1006
Wybotics v. Zodiac
Page 021

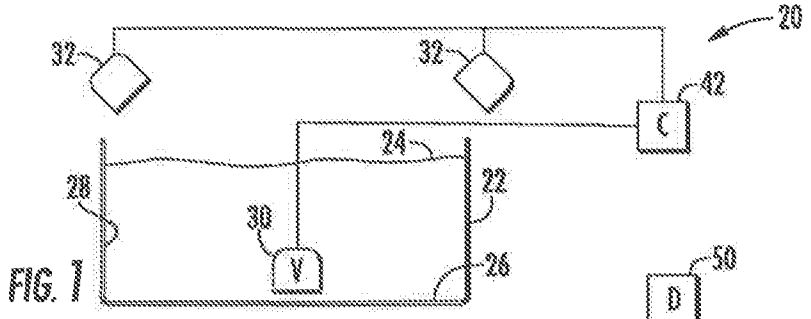

FIG. 1

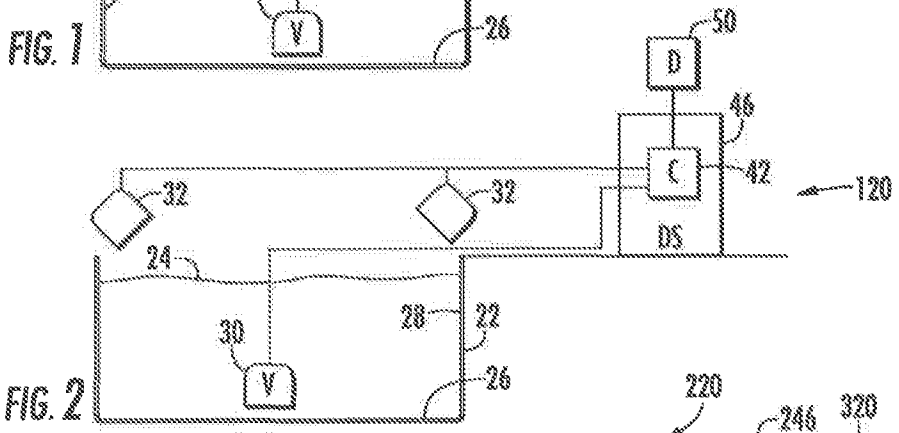

FIG. 2

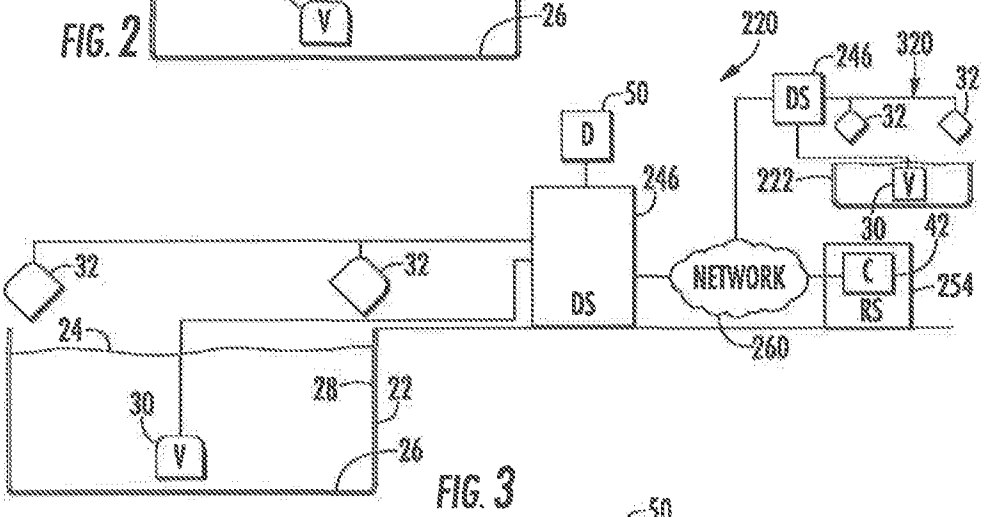

FIG. 3

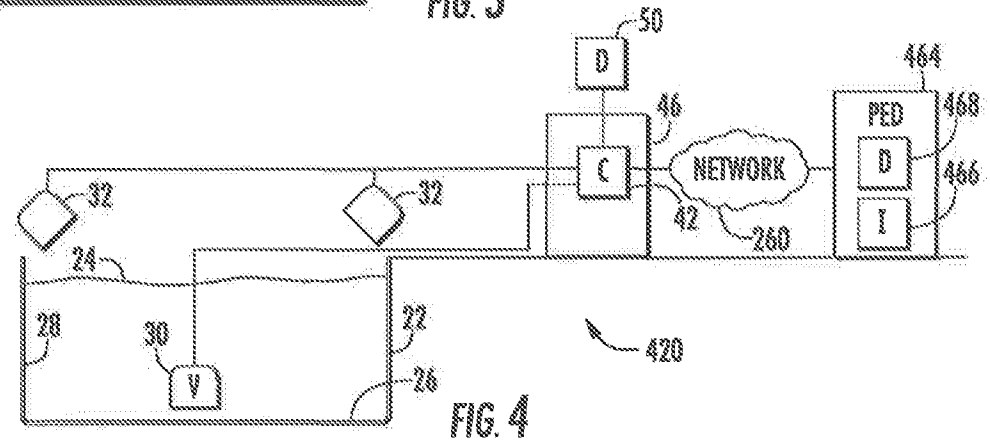

FIG. 4

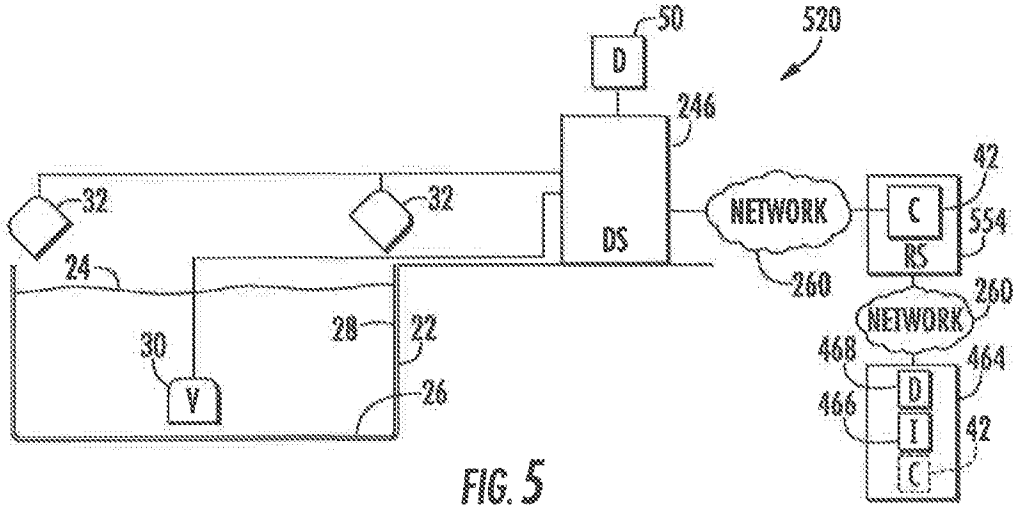

FIG. 5

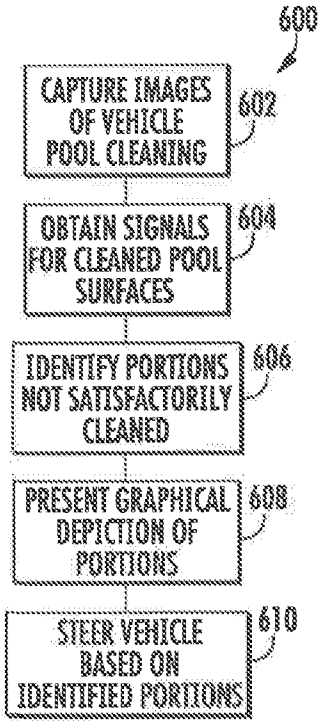

FIG. 6

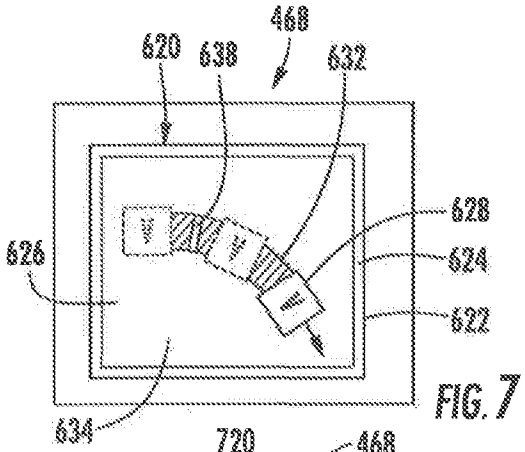

FIG. 7

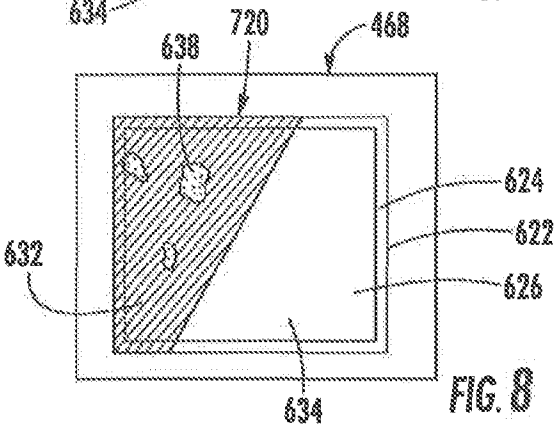

FIG. 8

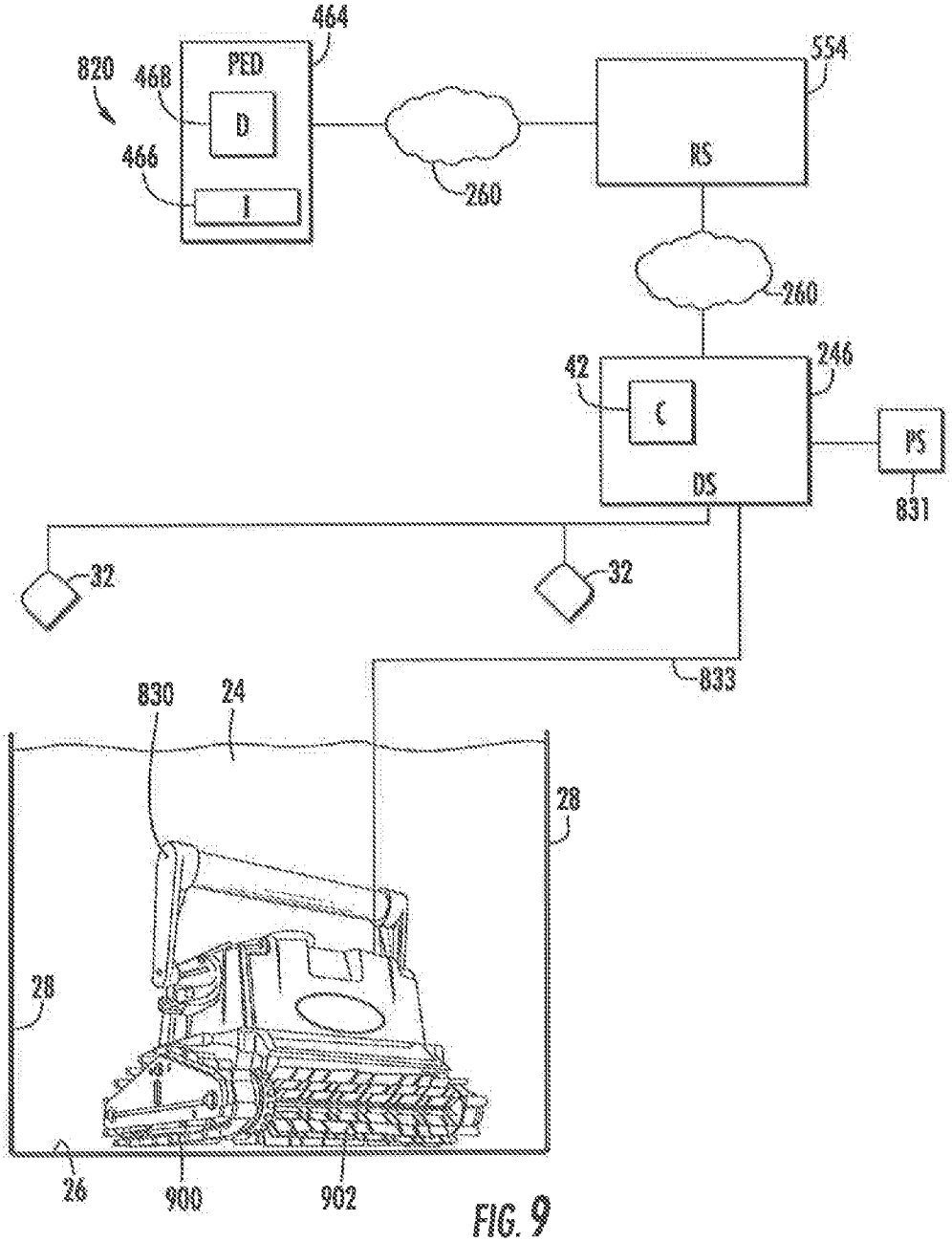
464
PED
820
468
D
466
I
260
554
RS
260
42
246
C
DS
PS
831
32
32
833
830
24
28
28
26
900
902

FIG. 9

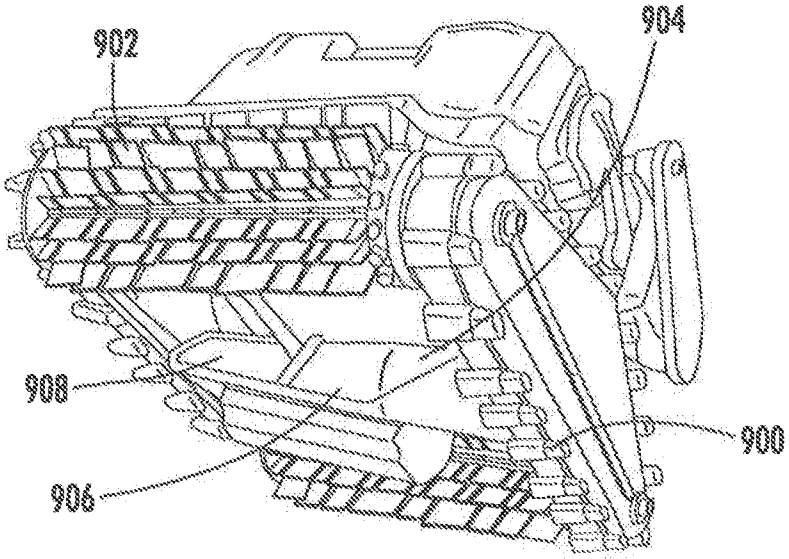

FIG. 10

UNITED STATES

DECLARATION FOR UTILITY AND DESIGN PATENT APPLICATIONS	Attorney Docket No.	214,790
	First Named Inventor	DURVASULA, Kameshwar
	Application No.	15/207,065
	Filing Date	July 11, 2016
	Art Unit	
	Examiner Name	

TITLE OF INVENTION: POOL CLEANING SYSTEM AND METHOD TO AUTOMATICALLY CLEAN SURFACES OF A POOL USING IMAGES FROM A CAMERA

As an inventor named below, I hereby declare that:
My residence, post office address and citizenship are as stated next to my name:
I believe that I am the original inventor (if only one name is listed below) or an original joint inventor (if multiple inventors are named below) of a claimed invention in the application.

This declaration is directed to:

CHECK APPROPRIATE BOX

[ ] the attached application, or

[X] United States application no. 15/207,065 or PCT International application no. _____
filed on July 11, 2016
and, if appropriate, an amendment filed on _____.

The above-identified application was made or authorized to be made by me.
I hereby authorize a patent attorney responsible for this application to complete this Declaration by the entry of the application number, application filing date, and attorney docket number, if necessary.

I hereby state that I have reviewed and understand the contents of the specification of the above-identified application, including the claims, as amended by any amendment referred to above.
I acknowledge my duty to disclose to the US Patent and Trademark Office all information known to me to be material to patentability as defined in 37 CFR 1.56, including for continuation-in-part applications, material information which became available between the filing date of the prior application and the national or PCT international filing date of the continuation-in-part application.
I hereby acknowledge that any willful false statement made in this declaration is punishable under 18 USC §1001 by fine or imprisonment of not more than five (5) years, or both.

Authorization To Permit Access To Application By Participating Office

If applicable, I hereby grant the USPTO authority to provide access to the above-identified patent application by the European Patent Office (EPO), the Japan Patent Office (JPO), the Korean Intellectual Property Office (KIPO), the World Intellectual Property Office (WIPO) and any other intellectual property offices in which a foreign application is filed claiming priority to the above-identified application. In accordance with 37 CFR §1.14(h)(3), access will be provided to prepare a copy of the above-identified patent application with respect to: (1) the above-identified patent application as filed; (2) any foreign application to which the above-identified patent application claims priority under 35 U.S.C.§119(a)-(d) if a copy of the foreign application that satisfies the certified copy requirement of 37 CFR§1.55 has been filed in the above-identified patent application; and (3) any US application as filed from which benefit is sought in the above-identified patent application. In accordance with 37 CFR§1.14(c), access may be provided to information concerning the date of the filing of this Authorization to Permit Access to Application by Participating Offices.

Direct Telephone Calls To:

ABELMAN, FRAYNE & SCHWAB
(212) 949-9022

Send Correspondence To:

The Address at Customer Number 38,137

I hereby declare that all statements made herein of my own knowledge are true and that all statements made on information and belief are believed to be true; and further that these statements were made with the knowledge that willful false statements and the like so made are punishable by fine or imprisonment of not more than five (5) years, or both under Section 1001 of Title 18 of the United States Code and that such willful false statements may jeopardize the validity of the application or any patent issued thereon.

DETAILS REQUIRED FOR EACH INVENTOR

Full Name of Sole or First Inventor	Inventor's Signature	Date
Kameshwar DURVASULA		14 July 2016
Residence		Citizenship
8 Holly Lane, Garfield, New Jersey 07026		US
Post Office Address		
Same as above		
Full Name of Second Joint Inventor, If Any	Inventor's Signature	Date
William Londono CORREA		14 July 2016
Residence		Citizenship
499 Beardsley Avenue, Bloomfield, New Jersey 07009		US
Post Office Address		
Same as above		
Full Name of Third Joint Inventor, If Any	Inventor's Signature	Date
Residence		Citizenship
Post Office Address		
Same as above		
Full Name of Fourth Joint Inventor, If Any	Inventor's Signature	Date
Residence		Citizenship
Post Office Address		
Full Name of Fifth Joint Inventor, If Any	Inventor's Signature	Date
Residence		Citizenship
Post Office Address		
Full Name of Sixth Joint Inventor, If Any	Inventor's Signature	Date
Residence		Citizenship
Post Office Address		
Full Name of Seventh Joint Inventor, If Any	Inventor's Signature	Date
Residence		Citizenship
Post Office Address		
Full Name of Eight Joint Inventor, If Any	Inventor's Signature	Date
Residence		Citizenship
Post Office Address		

WYBOTICS EX1006
Wybotics v. Zodiac
Page 027

PTO/AIA/14 (02-18)
Approved for use through 11/30/2020. OMB 0651-0032
U.S. Patent and Trademark Office; U.S. DEPARTMENT OF COMMERCE
Under the Paperwork Reduction Act of 1995, no persons are required to respond to a collection of information unless it contains a valid OMB control number.

Application Data Sheet 37 CFR 1.76	Attorney Docket Number	105650-1292756
	Application Number	
Title of Invention	POOL CLEANING SYSTEM AND METHOD TO AUTOMATICALLY CLEAN SURFACES OF A POOL USING IMAGES FROM A CAMERA	

The application data sheet is part of the provisional or nonprovisional application for which it is being submitted. The following form contains the bibliographic data arranged in a format specified by the United States Patent and Trademark Office as outlined in 37 CFR 1.76.
This document may be completed electronically and submitted to the Office in electronic format using the Electronic Filing System (EFS) or the document may be printed and included in a paper filed application.

Secrecy Order 37 CFR 5.2:

☐ Portions or all of the application associated with this Application Data Sheet may fall under a Secrecy Order pursuant to 37 CFR 5.2 (Paper filers only. Applications that fall under Secrecy Order may not be filed electronically.)

Inventor Information:

Inventor 1 Remove

Legal Name

Prefix	Given Name	Middle Name	Family Name	Suffix
	Kameshwar		Durvasula	

Residence Information (Select One) ● US Residency Non US Residency Active US Military Service

City	Garfield	State/Province	NJ	Country of Residence i	US

Mailing Address of Inventor:

Address 1	2882 Whiptail Loop #100
Address 2	
City	Carlsbad
State/Province	CA
Postal Code	92010
Country i	US

Inventor 2 Remove

Legal Name

Prefix	Given Name	Middle Name	Family Name	Suffix
	William	Londono	Correa	

Residence Information (Select One) ◉ US Residency Non US Residency Active US Military Service

City	Bloomfield	State/Province	NJ	Country of Residence i	US

Mailing Address of Inventor:

Address 1	2882 Whiptail Loop #100
Address 2	
City	Carlsbad
State/Province	CA
Postal Code	92010
Country i	US

All Inventors Must Be Listed - Additional Inventor Information blocks may be generated within this form by selecting the **Add** button. Add

Correspondence Information:

Enter either Customer Number or complete the Correspondence Information section below.
For further information see 37 CFR 1.33(a).

Under the Paperwork Reduction Act of 1995, no persons are required to respond to a collection of information unless it contains a valid OMB control number.

Application Data Sheet 37 CFR 1.76	Attorney Docket Number	105650-1292756
	Application Number	
Title of Invention	POOL CLEANING SYSTEM AND METHOD TO AUTOMATICALLY CLEAN SURFACES OF A POOL USING IMAGES FROM A CAMERA	

☐ **An Address is being provided for the correspondence Information of this application.**

Customer Number	23370		
Email Address	ipefiling@kilpatricktownsend.com	Add Email	Remove Email

Application Information:

Title of the Invention	POOL CLEANING SYSTEM AND METHOD TO AUTOMATICALLY CLEAN SURFACES OF A POOL USING IMAGES FROM A CAMERA		
Attorney Docket Number	105650-1292756	**Small Entity Status Claimed**	☐
Application Type	Nonprovisional		
Subject Matter	Utility		
Total Number of Drawing Sheets (if any)	4	**Suggested Figure for Publication (if any)**	

Filing By Reference:

Only complete this section when filing an application by reference under 35 U.S.C. 111(c) and 37 CFR 1.57(a). Do not complete this section if application papers including a specification and any drawings are being filed. Any domestic benefit or foreign priority information must be provided in the appropriate section(s) below (i.e., "Domestic Benefit/National Stage Information" and "Foreign Priority Information").

For the purposes of a filing date under 37 CFR 1.53(b), the description and any drawings of the present application are replaced by this reference to the previously filed application, subject to conditions and requirements of 37 CFR 1.57(a).

Application number of the previously filed application	Filing date (YYYY-MM-DD)	Intellectual Property Authority or Country

Publication Information:

☐ Request Early Publication (Fee required at time of Request 37 CFR 1.219)

☐ **Request Not to Publish.** I hereby request that the attached application not be published under 35 U.S.C. 122(b) and certify that the invention disclosed in the attached application **has not and will not** be the subject of an application filed in another country, or under a multilateral international agreement, that requires publication at eighteen months after filing.

Representative Information:

Representative information should be provided for all practitioners having a power of attorney in the application. Providing this information in the Application Data Sheet does not constitute a power of attorney in the application (see 37 CFR 1.32).
Either enter Customer Number or complete the Representative Name section below. If both sections are completed the customer Number will be used for the Representative Information during processing.

Please Select One:	● Customer Number	US Patent Practitioner	○ Limited Recognition (37 CFR 11.9)
Customer Number	23370		

Under the Paperwork Reduction Act of 1995, no persons are required to respond to a collection of information unless it contains a valid OMB control number.

Application Data Sheet 37 CFR 1.76	Attorney Docket Number	105650-1292756
	Application Number	
Title of Invention	POOL CLEANING SYSTEM AND METHOD TO AUTOMATICALLY CLEAN SURFACES OF A POOL USING IMAGES FROM A CAMERA	

Domestic Benefit/National Stage Information:

This section allows for the applicant to either claim benefit under 35 U.S.C. 119(e), 120, 121, 365(c), or 386(c) or indicate National Stage entry from a PCT application. Providing benefit claim information in the Application Data Sheet constitutes the specific reference required by 35 U.S.C. 119(e) or 120, and 37 CFR 1.78.
When referring to the current application, please leave the "Application Number" field blank.

Prior Application Status	Pending		Remove
Application Number	Continuity Type	Prior Application Number	Filing or 371(c) Date (YYYY-MM-DD)
	Continuation of	17143624	2021-01-07

Prior Application Status	Patented				Remove
Application Number	Continuity Type	Prior Application Number	Filing Date (YYYY-MM-DD)	Patent Number	Issue Date (YYYY-MM-DD)
17143624	Continuation of	16919750	2020-07-02	11003191	2021-05-11

Prior Application Status	Patented				Remove
Application Number	Continuity Type	Prior Application Number	Filing Date (YYYY-MM-DD)	Patent Number	Issue Date (YYYY-MM-DD)
16919750	Continuation of	16416840	2019-05-20	10739785	2020-08-11

Prior Application Status	Patented				Remove
Application Number	Continuity Type	Prior Application Number	Filing Date (YYYY-MM-DD)	Patent Number	Issue Date (YYYY-MM-DD)
16416840	Continuation of	15973983	2018-05-08	10338599	2019-07-02

Prior Application Status	Patented				Remove
Application Number	Continuity Type	Prior Application Number	Filing Date (YYYY-MM-DD)	Patent Number	Issue Date (YYYY-MM-DD)
15973983	Continuation of	15207065	2016-07-11	9995051	2018-06-12

Prior Application Status	Patented				Remove
Application Number	Continuity Type	Prior Application Number	Filing Date (YYYY-MM-DD)	Patent Number	Issue Date (YYYY-MM-DD)
15207065	Continuation of	13545918	2012-07-10	9388595	2016-07-12

Additional Domestic Benefit/National Stage Data may be generated within this form by selecting the **Add** button. Add

Foreign Priority Information:

Under the Paperwork Reduction Act of 1995, no persons are required to respond to a collection of information unless it contains a valid OMB control number.

Application Data Sheet 37 CFR 1.76	Attorney Docket Number	105650-1292756
	Application Number	
Title of Invention	POOL CLEANING SYSTEM AND METHOD TO AUTOMATICALLY CLEAN SURFACES OF A POOL USING IMAGES FROM A CAMERA	

This section allows for the applicant to claim priority to a foreign application. Providing this information in the application data sheet constitutes the claim for priority as required by 35 U.S.C. 119(b) and 37 CFR 1.55. When priority is claimed to a foreign application that is eligible for retrieval under the priority document exchange program (PDX)[i] the information will be used by the Office to automatically attempt retrieval pursuant to 37 CFR 1.55(i)(1) and (2). Under the PDX program, applicant bears the ultimate responsibility for ensuring that a copy of the foreign application is received by the Office from the participating foreign intellectual property office, or a certified copy of the foreign priority application is filed, within the time period specified in 37 CFR 1.55(g)(1).

Remove

Application Number	Country[i]	Filing Date (YYYY-MM-DD)	Access Code[i] (if applicable)

Additional Foreign Priority Data may be generated within this form by selecting the **Add** button. Add

Statement under 37 CFR 1.55 or 1.78 for AIA (First Inventor to File) Transition Applications

☐ This application (1) claims priority to or the benefit of an application filed before March 16, 2013 and (2) also contains, or contained at any time, a claim to a claimed invention that has an effective filing date on or after March 16, 2013.
NOTE: By providing this statement under 37 CFR 1.55 or 1.78, this application, with a filing date on or after March 16, 2013, will be examined under the first inventor to file provisions of the AIA.

Application Data Sheet 37 CFR 1.76	Attorney Docket Number	105650-1292756
	Application Number	
Title of Invention	POOL CLEANING SYSTEM AND METHOD TO AUTOMATICALLY CLEAN SURFACES OF A POOL USING IMAGES FROM A CAMERA	

Authorization or Opt-Out of Authorization to Permit Access:

When this Application Data Sheet is properly signed and filed with the application, applicant has provided written authority to permit a participating foreign intellectual property (IP) office access to the instant application-as-filed (see paragraph A in subsection 1 below) and the European Patent Office (EPO) access to any search results from the instant application (see paragraph B in subsection 1 below).

Should applicant choose not to provide an authorization identified in subsection 1 below, applicant **must opt-out** of the authorization by checking the corresponding box A or B or both in subsection 2 below.

NOTE: This section of the Application Data Sheet is **ONLY** reviewed and processed with the **INITIAL** filing of an application. After the initial filing of an application, an Application Data Sheet cannot be used to provide or rescind authorization for access by a foreign IP office(s). Instead, Form PTO/SB/39 or PTO/SB/69 must be used as appropriate.

1. Authorization to Permit Access by a Foreign Intellectual Property Office(s)

A. Priority Document Exchange (PDX) - Unless box A in subsection 2 (opt-out of authorization) is checked, the undersigned hereby **grants the USPTO authority** to provide the European Patent Office (EPO), the Japan Patent Office (JPO), the Korean Intellectual Property Office (KIPO), the State Intellectual Property Office of the People's Republic of China (SIPO), the World Intellectual Property Organization (WIPO), and any other foreign intellectual property office participating with the USPTO in a bilateral or multilateral priority document exchange agreement in which a foreign application claiming priority to the instant patent application is filed, access to: (1) the instant patent application-as-filed and its related bibliographic data, (2) any foreign or domestic application to which priority or benefit is claimed by the instant application and its related bibliographic data, and (3) the date of filing of this Authorization. See 37 CFR 1.14(h)(1).

B. Search Results from U.S. Application to EPO - Unless box B in subsection 2 (opt-out of authorization) is checked, the undersigned hereby **grants the USPTO authority** to provide the EPO access to the bibliographic data and search results from the instant patent application when a European patent application claiming priority to the instant patent application is filed. See 37 CFR 1.14(h)(2).

The applicant is reminded that the EPO's Rule 141(1) EPC (European Patent Convention) requires applicants to submit a copy of search results from the instant application without delay in a European patent application that claims priority to the instant application.

2. Opt-Out of Authorizations to Permit Access by a Foreign Intellectual Property Office(s)

☐ A. Applicant **DOES NOT** authorize the USPTO to permit a participating foreign IP office access to the instant application-as-filed. If this box is checked, the USPTO will not be providing a participating foreign IP office with any documents and information identified in subsection 1A above.

☐ B. Applicant **DOES NOT** authorize the USPTO to transmit to the EPO any search results from the instant patent application. If this box is checked, the USPTO will not be providing the EPO with search results from the instant application.

NOTE: Once the application has published or is otherwise publicly available, the USPTO may provide access to the application in accordance with 37 CFR 1.14.

Under the Paperwork Reduction Act of 1995, no persons are required to respond to a collection of information unless it contains a valid OMB control number.

Application Data Sheet 37 CFR 1.76	Attorney Docket Number	105650-1292756
	Application Number	
Title of Invention	POOL CLEANING SYSTEM AND METHOD TO AUTOMATICALLY CLEAN SURFACES OF A POOL USING IMAGES FROM A CAMERA	

Applicant Information:

Providing assignment information in this section does not substitute for compliance with any requirement of part 3 of Title 37 of CFR to have an assignment recorded by the Office.

Applicant 1 Remove

If the applicant is the inventor (or the remaining joint inventor or inventors under 37 CFR 1.45), this section should not be completed. The information to be provided in this section is the name and address of the legal representative who is the applicant under 37 CFR 1.43; or the name and address of the assignee, person to whom the inventor is under an obligation to assign the invention, or person who otherwise shows sufficient proprietary interest in the matter who is the applicant under 37 CFR 1.46. If the applicant is an applicant under 37 CFR 1.46 (assignee, person to whom the inventor is obligated to assign, or person who otherwise shows sufficient proprietary interest) together with one or more joint inventors, then the joint inventor or inventors who are also the applicant should be identified in this section. Clear

● Assignee	Legal Representative under 35 U.S.C. 117	Joint Inventor
Person to whom the inventor is obligated to assign.	Person who shows sufficient proprietary interest	

If applicant is the legal representative, indicate the authority to file the patent application, the inventor is:

Name of the Deceased or Legally Incapacitated Inventor:

If the Applicant is an Organization check here. ☒

Organization Name	ZODIAC POOL SYSTEMS LLC		
Mailing Address Information For Applicant:			
Address 1	2882 Whiptail Loop #100		
Address 2			
City	Carlsbad	**State/Province**	CA
Country	US	Postal Code	92010
Phone Number		Fax Number	
Email Address			

Additional Applicant Data may be generated within this form by selecting the Add button. Add

Assignee Information including Non-Applicant Assignee Information:

Providing assignment information in this section does not substitute for compliance with any requirement of part 3 of Title 37 of CFR to have an assignment recorded by the Office.

Under the Paperwork Reduction Act of 1995, no persons are required to respond to a collection of information unless it contains a valid OMB control number.

Application Data Sheet 37 CFR 1.76	Attorney Docket Number	105650-1292756
	Application Number	
Title of Invention	POOL CLEANING SYSTEM AND METHOD TO AUTOMATICALLY CLEAN SURFACES OF A POOL USING IMAGES FROM A CAMERA	

Assignee 1

Complete this section if assignee information, including non-applicant assignee information, is desired to be included on the patent application publication. An assignee-applicant identified in the "Applicant Information" section will appear on the patent application publication as an applicant. For an assignee-applicant, complete this section only if identification as an assignee is also desired on the patent application publication.

Remove

If the Assignee or Non-Applicant Assignee is an Organization check here. ☒

Organization Name	ZODIAC POOL SYSTEMS LLC

Mailing Address Information For Assignee including Non-Applicant Assignee:

Address 1	2882 Whiptail Loop #100		
Address 2			
City	Carlsbad	**State/Province**	CA
Country i	US	Postal Code	92010
Phone Number		Fax Number	
Email Address			

Additional Assignee or Non-Applicant Assignee Data may be generated within this form by selecting the Add button. Add

Signature:

Remove

NOTE: This Application Data Sheet must be signed in accordance with 37 CFR 1.33(b). **However, if this Application Data Sheet is submitted with the INITIAL filing of the application and either box A or B is not checked in subsection 2 of the "Authorization or Opt-Out of Authorization to Permit Access" section, then this form must also be signed in accordance with 37 CFR 1.14(c).**

This Application Data Sheet **must** be signed by a patent practitioner if one or more of the applicants is a **juristic entity** (e.g., corporation or association). If the applicant is two or more joint inventors, this form must be signed by a patent practitioner, **all** joint inventors who are the applicant, or one or more joint inventor-applicants who have been given power of attorney (e.g., see USPTO Form PTO/AIA/81) on behalf of **all** joint inventor-applicants.

See 37 CFR 1.4(d) for the manner of making signatures and certifications.

Signature	/Renae Wainwright/			Date (YYYY-MM-DD)	2022-01-10
First Name	Renae	Last Name	Wainwright	Registration Number	58961

Additional Signature may be generated within this form by selecting the Add button. Add

Under the Paperwork Reduction Act of 1995, no persons are required to respond to a collection of information unless it contains a valid OMB control number.

Application Data Sheet 37 CFR 1.76	Attorney Docket Number	105650-1292756
	Application Number	
Title of Invention	POOL CLEANING SYSTEM AND METHOD TO AUTOMATICALLY CLEAN SURFACES OF A POOL USING IMAGES FROM A CAMERA	

This collection of information is required by 37 CFR 1.76. The information is required to obtain or retain a benefit by the public which is to file (and by the USPTO to process) an application. Confidentiality is governed by 35 U.S.C. 122 and 37 CFR 1.14. This collection is estimated to take 23 minutes to complete, including gathering, preparing, and submitting the completed application data sheet form to the USPTO. Time will vary depending upon the individual case. Any comments on the amount of time you require to complete this form and/or suggestions for reducing this burden, should be sent to the Chief Information Officer, U.S. Patent and Trademark Office, U.S. Department of Commerce, P.O. Box 1450, Alexandria, VA 22313-1450. DO NOT SEND FEES OR COMPLETED FORMS TO THIS ADDRESS. **SEND TO: Commissioner for Patents, P.O. Box 1450, Alexandria, VA 22313-1450.**

Privacy Act Statement

The Privacy Act of 1974 (P.L. 93-579) requires that you be given certain information in connection with your submission of the attached form related to a patent application or patent. Accordingly, pursuant to the requirements of the Act, please be advised that: (1) the general authority for the collection of this information is 35 U.S.C. 2(b)(2); (2) furnishing of the information solicited is voluntary; and (3) the principal purpose for which the information is used by the U.S. Patent and Trademark Office is to process and/or examine your submission related to a patent application or patent. If you do not furnish the requested information, the U.S. Patent and Trademark Office may not be able to process and/or examine your submission, which may result in termination of proceedings or abandonment of the application or expiration of the patent.

The information provided by you in this form will be subject to the following routine uses:

1 The information on this form will be treated confidentially to the extent allowed under the Freedom of Information Act (5 U.S.C. 552) and the Privacy Act (5 U.S.C. 552a). Records from this system of records may be disclosed to the Department of Justice to determine whether the Freedom of Information Act requires disclosure of these records.

2. A record from this system of records may be disclosed, as a routine use, in the course of presenting evidence to a court, magistrate, or administrative tribunal, including disclosures to opposing counsel in the course of settlement negotiations.

3 A record in this system of records may be disclosed, as a routine use, to a Member of Congress submitting a request involving an individual, to whom the record pertains, when the individual has requested assistance from the Member with respect to the subject matter of the record.

4. A record in this system of records may be disclosed, as a routine use, to a contractor of the Agency having need for the information in order to perform a contract. Recipients of information shall be required to comply with the requirements of the Privacy Act of 1974, as amended, pursuant to 5 U.S.C. 552a(m).

5. A record related to an International Application filed under the Patent Cooperation Treaty in this system of records may be disclosed, as a routine use, to the International Bureau of the World Intellectual Property Organization, pursuant to the Patent CooperationTreaty.

6. A record in this system of records may be disclosed, as a routine use, to another federal agency for purposes of National Security review (35 U.S.C. 181) and for review pursuant to the Atomic Energy Act (42 U.S.C. 218(c)).

7. A record from this system of records may be disclosed, as a routine use, to the Administrator, General Services, or his/her designee, during an inspection of records conducted by GSA as part of that agency's responsibility to recommend improvements in records management practices and programs, under authority of 44 U.S.C. 2904 and 2906. Such disclosure shall be made in accordance with the GSA regulations governing inspection of records for this purpose, and any other relevant (i.e., GSA or Commerce) directive. Such disclosure shall not be used to make determinations about individuals.

8. A record from this system of records may be disclosed, as a routine use, to the public after either publication of the application pursuant to 35 U.S.C. 122(b) or issuance of a patent pursuant to 35 U.S.C. 151. Further, a record may be disclosed, subject to the limitations of 37 CFR 1.14, as a routine use, to the public if the record was filed in an application which became abandoned or in which the proceedings were terminated and which application is referenced by either a published application, an application open to public inspections or an issued patent.

9. A record from this system of records may be disclosed, as a routine use, to a Federal, State, or local law enforcement agency, if the USPTO becomes aware of a violation or potential violation of law or regulation.

PTO/AIA/82A (07-13)
Approved for use through 03/31/2021. OMB 0651-0035
U.S. Patent and Trademark Office; U.S. DEPARTMENT OF COMMERCE
Under the Paperwork Reduction Act of 1995, no persons are required to respond to a collection of information unless it displays a valid OMB control number.

TRANSMITTAL FOR POWER OF ATTORNEY TO ONE OR MORE REGISTERED PRACTITIONERS

NOTE: This form is to be submitted with the Power of Attorney by Applicant form (PTO/AIA/82B) to identify the application to which the Power of Attorney is directed, in accordance with 37 CFR 1.5, unless the application number and filing date are identified in the Power of Attorney by Applicant form. If neither form PTO/AIA/82A nor form PTO/AIA82B identifies the application to which the Power of Attorney is directed, the Power of Attorney will not be recognized in the application.

Application Number	TBD (Continuation of 17/143,624)
Filing Date	Concurrently Herewith
First Named Inventor	Kameshwar Durvasula
Title	POOL CLEANING SYSTEM AND METHOD TO AUTOMATICALLY CLEAN SURFACES OF A POOL USING IMAGES FROM A CAMERA
Art Unit	TBD
Examiner Name	TBD
Attorney Docket Number	105650-1292756

SIGNATURE of Applicant or Patent Practitioner

Signature	/Renae B. Wainwright/	Date (Optional)	January 10, 2022
Name	Renae B. Wainwright	Registration Number	58961
Title (if Applicant is a juristic entity)	Attorney for Applicant		
Applicant Name (if Applicant is a juristic entity)	Zodiac Pool Systems LLC		

NOTE: This form must be signed in accordance with 37 CFR 1.33. See 37 CFR 1.4(d) for signature requirements and certifications. If more than one applicant, use multiple forms.

☑ *Total of 2 forms are submitted.

This collection of information is required by 37 CFR 1.131, 1.32, and 1.33. The information is required to obtain or retain a benefit by the public which is to file (and by the USPTO to process) an application. Confidentiality is governed by 35 U.S.C. 122 and 37 CFR 1.11 and 1.14. This collection is estimated to take 3 minutes to complete, including gathering, preparing, and submitting the completed application form to the USPTO. Time will vary depending upon the individual case. Any comments on the amount of time you require to complete this form and/or suggestions for reducing this burden, should be sent to the Chief Information Officer, U.S. Patent and Trademark Office, U.S. Department of Commerce, P.O. Box 1450, Alexandria, VA 22313-1450. DO NOT SEND FEES OR COMPLETED FORMS TO THIS ADDRESS. **SEND TO: Commissioner for Patents, P.O. Box 1450, Alexandria, VA 22313-1450.**

If you need assistance in completing the form, call 1-800-PTO-9199 and select option 2.

Doc Code: PA..
Document Description: Power of Attorney

PTO/AIA/82B (07-13)
Approved for use through 01/31/2018. OMB 0651-0035
U.S. Patent and Trademark Office; U.S. DEPARTMENT OF COMMERCE
Under the Paperwork Reduction Act of 1995, no persons are required to respond to a collection of information unless it displays a valid OMB control number

POWER OF ATTORNEY BY APPLICANT

I hereby revoke all previous powers of attorney given in the application identified in either the attached transmittal letter or the boxes below.

Application Number	Filing Date

(Note: The boxes above may be left blank if information is provided on form PTO/AIA/82A.)

☑ I hereby appoint the Patent Practitioner(s) associated with the following Customer Number as my/our attorney(s) or agent(s), and to transact all business in the United States Patent and Trademark Office connected therewith for the application referenced in the attached transmittal letter (form PTO/AIA/82A) or identified above: 23370

OR

☐ I hereby appoint Practitioner(s) named in the attached list (form PTO/AIA/82C) as my/our attorney(s) or agent(s), and to transact all business in the United States Patent and Trademark Office connected therewith for the patent application referenced in the attached transmittal letter (form PTO/AIA/82A) or identified above. (Note: Complete form PTO/AIA/82C.)

Please recognize or change the correspondence address for the application identified in the attached transmittal letter or the boxes above to:

☑ The address associated with the above-mentioned Customer Number

OR

☐ The address associated with Customer Number:

OR

☐ Firm or Individual Name					
Address					
City		State		Zip	
Country					
Telephone		Email			

I am the Applicant (if the Applicant is a juristic entity, list the Applicant name in the box):

ZODIAC POOL SYSTEMS LLC

☐ Inventor or Joint Inventor (title not required below)

☐ Legal Representative of a Deceased or Legally Incapacitated Inventor (title not required below)

☑ Assignee or Person to Whom the Inventor is Under an Obligation to Assign (provide signer's title if applicant is a juristic entity)

☐ Person Who Otherwise Shows Sufficient Proprietary Interest (e.g., a petition under 37 CFR 1.46(b)(2) was granted in the application or is concurrently being filed with this document) (provide signer's title if applicant is a juristic entity)

SIGNATURE of Applicant for Patent

The undersigned (whose title is supplied below) is authorized to act on behalf of the applicant (e.g., where the applicant is a juristic entity).

Signature	[signature]	Date (Optional)	2.5.18
Name	David D. McKinney Jr.		
Title	VP, General Counsel + Secretary of Zodiac Pool Systems LLC		

NOTE: Signature - This form must be signed by the applicant in accordance with 37 CFR 1.33. See 37 CFR 1.4 for signature requirements and certifications. If more than one applicant, use multiple forms.

☑ Total of 2 forms are submitted.

This collection of information is required by 37 CFR 1.131, 1.32, and 1.33. The information is required to obtain or retain a benefit by the public which is to file (and by the USPTO to process) an application. Confidentiality is governed by 35 U.S.C. 122 and 37 CFR 1.11 and 1.14. This collection is estimated to take 3 minutes to complete, including gathering, preparing, and submitting the completed application form to the USPTO. Time will vary depending upon the individual case. Any comments on the amount of time you require to complete this form and/or suggestions for reducing this burden, should be sent to the Chief Information Officer, U.S. Patent and Trademark Office, U.S. Department of Commerce, P.O. Box 1450, Alexandria, VA 22313-1450. DO NOT SEND FEES OR COMPLETED FORMS TO THIS ADDRESS. **SEND TO: Commissioner for Patents, P.O. Box 1450, Alexandria, VA 22313-1450.**

If you need assistance in completing the form, call 1-800-PTO-9199 and select option 2.

IN THE UNITED STATES PATENT AND TRADEMARK OFFICE

In re Application of:	)	
	)	
K. Durvasula, *et al.*	)	Group Art Unit: unknown
	)	
Continuation of	)	Examiner: unknown
Serial No.: 17/143,624	)	
	)	Conf. No.: unknown
Filed: January 10, 2022	)	
	)	
For: POOL CLEANING SYSTEM AND METHOD TO AUTOMATICALLY CLEAN SURFACES OF A POOL USING IMAGES FROM A CAMERA	)	

January 10, 2022
Attorney Docket No. 105650-1292756

Certificate of Electronic Filing
I hereby certify that this correspondence is being electronically filed with The United States Patent Office via EFS Web, on January 10, 2022.

/Sandee Harvey/
Sandee Harvey

Commissioner for Patents
P.O. Box 1450
Alexandria, Virginia 22313-1450

PRELIMINARY AMENDMENT

Dear Commissioner:

This paper is submitted prior to examination of the above-identified application.

Amendment to the Specification

Kindly delete the first paragraph of the application (p. 1, ¶ 001) and replace it with the following new paragraph:

This application is a continuation of allowed U.S. Patent Application Serial No. 17/143,624, filed January 7, 2021, which is a continuation of U.S. Patent Application Serial No. 16/919,750, filed July 2, 2020 (now U.S. Patent No. 11,003,191), which is a continuation of U.S. Patent Application Serial No. 16/416,840, filed May 20, 2019 (now U.S. Patent No. 10,739,785), which is a continuation of U.S. Patent Application Serial No. 15/973,983, filed May 8, 2018 (now U.S. Patent No. 10,338,599), which is a continuation of U.S. Patent Application Serial No. 15/207,065, filed July 11, 2016 (now U.S. Patent No. 9,995,051), which is a continuation of U.S. Patent Application Serial No. 13/545,918, filed July 10, 2012 (now U.S. Patent No. 9,388,595), the contents of all of which are incorporated herein by reference in their entireties.

WYBOTICS EX1006
Wybotics v. Zodiac
Page 040

Amendment to the Claims

Kindly amend the claims of the application as follows:

1.-19. (cancelled)

20. (new) A self-propelled pool cleaning system for cleaning debris from a submerged surface of a swimming pool, comprising:

a. a vehicle body;

b. means for moving the vehicle body within the swimming pool;

c. a filter configured to retain debris collected from the submerged surface;

d. at least one camera for capturing an image of at least a first object within the swimming pool; and

e. a controller (i) in electronic communication with the at least one camera and (ii) configured to generate, in response to the captured image, at least one control signal to cause movement of the body within the swimming pool to, or away from, the first object.

WYBOTICS EX1006
Wybotics v. Zodiac
Page 041

Remarks

This application claims priority to a pre-AIA application filed July 10, 2012 and is a direct continuation of allowed U.S. Patent Application Serial No. 17/143,624 (the "Allowed Parent Application"). Included among the allowed claims of the Allowed Parent Application is claim 23. In this application, Applicant has presented claim 20, which is similar in many respects to allowed claim 23 of the Allowed Parent Application. Subject to any non-statutory double-patenting objection that might be raised by the Examiner, Applicant believes claim 20 of this application to be patentable and thus requests that it be allowed.

OF COUNSEL:

Kilpatrick Townsend & Stockton LLP
1100 Peachtree Street
Suite 2800
Atlanta, Georgia 30309
(404) 815-6528

Respectfully submitted,

/Renae B. Wainwright/

Renae B. Wainwright
Reg. No. 58961
Attorney for the Assignee

WYBOTICS EX1006
Wybotics v. Zodiac
Page 042

Electronic Patent Application Fee Transmittal

Application Number:	
Filing Date:	
Title of Invention:	POOL CLEANING SYSTEM AND METHOD TO AUTOMATICALLY CLEAN SURFACES OF A POOL USING IMAGES FROM A CAMERA
First Named Inventor/Applicant Name:	Kameshwar Durvasula
Filer:	Renae Bailey Wainwright/Sandee Harvey-McCullough
Attorney Docket Number:	105650-1292756

Filed as Large Entity

Filing Fees for Utility under 35 USC 111(a)

Description	Fee Code	Quantity	Amount	Sub-Total in USD($)
Basic Filing:				
UTILITY APPLICATION FILING	1011	1	320	320
UTILITY SEARCH FEE	1111	1	700	700
UTILITY EXAMINATION FEE	1311	1	800	800
Pages:				
Claims:				
Miscellaneous-Filing:				
Petition:				
Patent-Appeals-and-Interference:				

Description	Fee Code	Quantity	Amount	Sub-Total in USD($)
Post-Allowance-and-Post-Issuance:				
Extension-of-Time:				
Miscellaneous:				
			Total in USD ($)	**1820**

Electronic Acknowledgement Receipt

EFS ID:	44710854
Application Number:	17572388
International Application Number:	
Confirmation Number:	1072
Title of Invention:	POOL CLEANING SYSTEM AND METHOD TO AUTOMATICALLY CLEAN SURFACES OF A POOL USING IMAGES FROM A CAMERA
First Named Inventor/Applicant Name:	Kameshwar Durvasula
Customer Number:	23370
Filer:	Renae Bailey Wainwright/Sandee Harvey-McCullough
Filer Authorized By:	Renae Bailey Wainwright
Attorney Docket Number:	105650-1292756
Receipt Date:	10-JAN-2022
Filing Date:	
Time Stamp:	18:20:13
Application Type:	Utility under 35 USC 111(a)

Payment information:

Submitted with Payment	yes
Payment Type	CARD
Payment was successfully received in RAM	$1820
RAM confirmation Number	E202210I21394931
Deposit Account	201430
Authorized User	Sandee Harvey-McCullough

The Director of the USPTO is hereby authorized to charge indicated fees and credit any overpayment as follows:

37 CFR 1.16 (National application filing, search, and examination fees)

37 CFR 1.17 (Patent application and reexamination processing fees)

37 CFR 1.19 (Document supply fees)

37 CFR 1.20 (Post Issuance fees)

37 CFR 1.21 (Miscellaneous fees and charges)

File Listing:

Document Number	Document Description	File Name	File Size(Bytes)/ Message Digest	Multi Part /.zip	Pages (if appl.)
1	Transmittal of New Application	APPLNTRANS.pdf	259569 718e59f716fd38274cd0204e16d964f10e5af76a	no	2
Warnings:					
Information:					
2		APPLN.pdf	1216442 2e4448b9b30d1d048054a97c2aa1ce71117ebcd8	yes	18
	Multipart Description/PDF files in .zip description				
	Document Description		**Start**	**End**	
	Specification		1	14	
	Claims		15	17	
	Abstract		18	18	
Warnings:					
Information:					
3	Drawings-other than black and white line drawings	DWGS.pdf	765579 2c016928046633be2e7aa4b3ba2a5dc05baebf6e	no	4
Warnings:					
Information:					
4	Oath or Declaration filed	DECS.pdf	280106 9d9cd6e5ace70a5d2cc8b224a2998612b7a034ae	no	2
Warnings:					
Information:					
5	Application Data Sheet	ADS.pdf	1823036 3f19a0fa48db55380046bbd74efb73d11aafa43d	no	9

Warnings:					
Information:					
6	Power of Attorney	POATRANS.pdf	160467 3d877c2e79344947547ffaef97a15b83dca0f565	no	1
Warnings:					
Information:					
7	Power of Attorney	POA.pdf	93072 11b48e9246f509012422b1eb37a068873f57ea4d	no	1
Warnings:					
Information:					
8		PRELIMAMD.pdf	123388 f369daaa6271538d1af25f2811884494d4efab5b	yes	4

	Multipart Description/PDF files in .zip description		
	Document Description	**Start**	**End**
	Preliminary Amendment	1	1
	Specification	2	2
	Claims	3	3
	Applicant Arguments/Remarks Made in an Amendment	4	4

Warnings:					
Information:					
9	Fee Worksheet (SB06)	fee-info.pdf	44472 db67ecf0c763e2b7eb1d6e6844b7c8a279094617	no	2
Warnings:					
Information:					
		Total Files Size (in bytes):	4766131		

This Acknowledgement Receipt evidences receipt on the noted date by the USPTO of the indicated documents, characterized by the applicant, and including page counts, where applicable. It serves as evidence of receipt similar to a Post Card, as described in MPEP 503.

New Applications Under 35 U.S.C. 111
If a new application is being filed and the application includes the necessary components for a filing date (see 37 CFR 1.53(b)-(d) and MPEP 506), a Filing Receipt (37 CFR 1.54) will be issued in due course and the date shown on this Acknowledgement Receipt will establish the filing date of the application.
National Stage of an International Application under 35 U.S.C. 371
If a timely submission to enter the national stage of an international application is compliant with the conditions of 35 U.S.C. 371 and other applicable requirements a Form PCT/DO/EO/903 indicating acceptance of the application as a national stage submission under 35 U.S.C. 371 will be issued in addition to the Filing Receipt, in due course.
New International Application Filed with the USPTO as a Receiving Office
If a new international application is being filed and the international application includes the necessary components for an international filing date (see PCT Article 11 and MPEP 1810), a Notification of the International Application Number and of the International Filing Date (Form PCT/RO/105) will be issued in due course, subject to prescriptions concerning national security, and the date shown on this Acknowledgement Receipt will establish the international filing date of the application.

PATENT APPLICATION FEE DETERMINATION RECORD

Substitute for Form PTO-875

Application or Docket Number
17/572,388

APPLICATION AS FILED - PART I

FOR	(Column 1) NUMBER FILED	(Column 2) NUMBER EXTRA	SMALL ENTITY RATE($)	SMALL ENTITY FEE($)	OR	OTHER THAN SMALL ENTITY RATE($)	OTHER THAN SMALL ENTITY FEE($)
BASIC FEE (37 CFR 1.16(a), (b), or (c))	N/A	N/A	N/A			N/A	320
SEARCH FEE (37 CFR 1.16(k), (i), or (m))	N/A	N/A	N/A			N/A	700
EXAMINATION FEE (37 CFR 1.16(o), (p), or (q))	N/A	N/A	N/A			N/A	800
TOTAL CLAIMS (37 CFR 1.16(i))	1 minus 20 =	*			OR	x 100 =	0.00
INDEPENDENT CLAIMS (37 CFR 1.16(h))	1 minus 3 =	*				x 480 =	0.00
APPLICATION SIZE FEE (37 CFR 1.16(s))	If the specification and drawings exceed 100 sheets of paper, the application size fee due is $310 ($155 for small entity) for each additional 50 sheets or fraction thereof. See 35 U.S.C. 41(a)(1)(G) and 37 CFR 1.16(s).						0.00
MULTIPLE DEPENDENT CLAIM PRESENT (37 CFR 1.16(j))							0.00
* If the difference in column 1 is less than zero, enter "0" in column 2.			TOTAL			TOTAL	1820

APPLICATION AS AMENDED - PART II

		(Column 1) CLAIMS REMAINING AFTER AMENDMENT		(Column 2) HIGHEST NUMBER PREVIOUSLY PAID FOR	(Column 3) PRESENT EXTRA	SMALL ENTITY RATE($)	SMALL ENTITY ADDITIONAL FEE($)	OR	OTHER THAN SMALL ENTITY RATE($)	OTHER THAN SMALL ENTITY ADDITIONAL FEE($)
AMENDMENT A	Total (37 CFR 1.16(i))	*	Minus	**	=	x =		OR	x =	
AMENDMENT A	Independent (37 CFR 1.16(h))	*	Minus	***	=	x =		OR	x =	
AMENDMENT A	Application Size Fee (37 CFR 1.16(s))									
AMENDMENT A	FIRST PRESENTATION OF MULTIPLE DEPENDENT CLAIM (37 CFR 1.16(j))							OR		
						TOTAL ADD'L FEE		OR	TOTAL ADD'L FEE	

		(Column 1) CLAIMS REMAINING AFTER AMENDMENT		(Column 2) HIGHEST NUMBER PREVIOUSLY PAID FOR	(Column 3) PRESENT EXTRA	RATE($)	ADDITIONAL FEE($)	OR	RATE($)	ADDITIONAL FEE($)
AMENDMENT B	Total (37 CFR 1.16(i))	*	Minus	**	=	x =		OR	x =	
AMENDMENT B	Independent (37 CFR 1.16(h))	*	Minus	***	=	x =		OR	x =	
AMENDMENT B	Application Size Fee (37 CFR 1.16(s))									
AMENDMENT B	FIRST PRESENTATION OF MULTIPLE DEPENDENT CLAIM (37 CFR 1.16(j))							OR		
						TOTAL ADD'L FEE		OR	TOTAL ADD'L FEE	

* If the entry in column 1 is less than the entry in column 2, write "0" in column 3.
** If the "Highest Number Previously Paid For" IN THIS SPACE is less than 20, enter "20".
*** If the "Highest Number Previously Paid For" IN THIS SPACE is less than 3, enter "3".
The "Highest Number Previously Paid For" (Total or Independent) is the highest found in the appropriate box in column 1.

UNITED STATES PATENT AND TRADEMARK OFFICE

UNITED STATES DEPARTMENT OF COMMERCE
United States Patent and Trademark Office
Address: COMMISSIONER FOR PATENTS
P.O. Box 1450
Alexandria, Virginia 22313-1450
www.uspto.gov

APPLICATION NUMBER	FILING or 371(c) DATE	GRP ART UNIT	FIL FEE REC'D	ATTY.DOCKET.NO	TOT CLAIMS	IND CLAIMS
17/572,388	01/10/2022	1735	1820	105650-1292756	1	1

CONFIRMATION NO. 1072

FILING RECEIPT

OC000000131226811

23370
Kilpatrick Townsend & Stockton LLP - East Coast
MAILSTOP: IP DOCKETING - 22
1100 PEACHTREE STREET
SUITE 2800
ATLANTA, GA 30309

Date Mailed: 01/21/2022

Receipt is acknowledged of this non-provisional utility patent application. The application will be taken up for examination in due course. Applicant will be notified as to the results of the examination. Any correspondence concerning the application must include the following identification information: the U.S. APPLICATION NUMBER, FILING DATE, NAME OF FIRST INVENTOR, and TITLE OF INVENTION. Fees transmitted by check or draft are subject to collection.

Please verify the accuracy of the data presented on this receipt. If an error is noted on this Filing Receipt, please submit a written request for a corrected Filing Receipt, including a properly marked-up ADS showing the changes with strike-through for deletions and underlining for additions. If you received a "Notice to File Missing Parts" or other Notice requiring a response for this application, please submit any request for correction to this Filing Receipt with your reply to the Notice. When the USPTO processes the reply to the Notice, the USPTO will generate another Filing Receipt incorporating the requested corrections provided that the request is grantable.

Inventor(s)

Kameshwar Durvasula, Garfield, NJ;
William Londono Correa, Bloomfield, NJ;

Applicant(s)

ZODIAC POOL SYSTEMS LLC, Carlsbad, CA;

Assignment For Published Patent Application

ZODIAC POOL SYSTEMS LLC, Carlsbad, CA

Power of Attorney: The patent practitioners associated with Customer Number 23370

Domestic Priority data as claimed by applicant

This application is a CON of 17/143,624 01/07/2021
which is a CON of 16/919,750 07/02/2020 PAT 11003191
which is a CON of 16/416,840 05/20/2019 PAT 10739785
which is a CON of 15/973,983 05/08/2018 PAT 10338599
which is a CON of 15/207,065 07/11/2016 PAT 9995051
which is a CON of 13/545,918 07/10/2012 PAT 9388595

Foreign Applications for which priority is claimed (You may be eligible to benefit from the **Patent Prosecution Highway** program at the USPTO. Please see http://www.uspto.gov for more information.) - None.
Foreign application information must be provided in an Application Data Sheet in order to constitute a claim to foreign priority. See 37 CFR 1.55 and 1.76.

Permission to Access Application via Priority Document Exchange: Yes

Permission to Access Search Results: Yes

Applicant may provide or rescind an authorization for access using Form PTO/SB/39 or Form PTO/SB/69 as appropriate.

If Required, Foreign Filing License Granted: 01/19/2022

The country code and number of your priority application, to be used for filing abroad under the Paris Convention, is **US 17/572,388**

Projected Publication Date: 04/28/2022

Non-Publication Request: No

Early Publication Request: No

Title

POOL CLEANING SYSTEM AND METHOD TO AUTOMATICALLY CLEAN SURFACES OF A POOL USING IMAGES FROM A CAMERA

Preliminary Class

164

Statement under 37 CFR 1.55 or 1.78 for AIA (First Inventor to File) Transition Applications: No

PROTECTING YOUR INVENTION OUTSIDE THE UNITED STATES

Since the rights granted by a U.S. patent extend only throughout the territory of the United States and have no effect in a foreign country, an inventor who wishes patent protection in another country must apply for a patent in a specific country or in regional patent offices. Applicants may wish to consider the filing of an international application under the Patent Cooperation Treaty (PCT). An international (PCT) application generally has the same effect as a regular national patent application in each PCT-member country. The PCT process **simplifies** the filing of patent applications on the same invention in member countries, but **does not result** in a grant of "an international patent" and does not eliminate the need of applicants to file additional documents and fees in countries where patent protection is desired.

Almost every country has its own patent law, and a person desiring a patent in a particular country must make an application for patent in that country in accordance with its particular laws. Since the laws of many countries differ in various respects from the patent law of the United States, applicants are advised to seek guidance from specific foreign countries to ensure that patent rights are not lost prematurely.

Applicants also are advised that in the case of inventions made in the United States, the Director of the USPTO must issue a license before applicants can apply for a patent in a foreign country. The filing of a U.S. patent application serves as a request for a foreign filing license. The application's filing receipt contains further information and guidance as to the status of applicant's license for foreign filing.

Applicants may wish to consult the USPTO booklet, "General Information Concerning Patents" (specifically, the section entitled "Treaties and Foreign Patents") for more information on timeframes and deadlines for filing foreign patent applications. The guide is available either by contacting the USPTO Contact Center at 800-786-9199, or it can be viewed on the USPTO website at http://www.uspto.gov/web/offices/pac/doc/general/index.html.

For information on preventing theft of your intellectual property (patents, trademarks and copyrights), you may wish to consult the U.S. Government website, http://www.stopfakes.gov. Part of a Department of Commerce initiative, this website includes self-help "toolkits" giving innovators guidance on how to protect intellectual property in specific countries such as China, Korea and Mexico. For questions regarding patent enforcement issues, applicants may call the U.S. Government hotline at 1-866-999-HALT (1-866-999-4258).

LICENSE FOR FOREIGN FILING UNDER

Title 35, United States Code, Section 184

Title 37, Code of Federal Regulations, 5.11 & 5.15

GRANTED

The applicant has been granted a license under 35 U.S.C. 184, if the phrase "IF REQUIRED, FOREIGN FILING LICENSE GRANTED" followed by a date appears on this form. Such licenses are issued in all applications where the conditions for issuance of a license have been met, regardless of whether or not a license may be required as set forth in 37 CFR 5.15. The scope and limitations of this license are set forth in 37 CFR 5.15(a) unless an earlier license has been issued under 37 CFR 5.15(b). The license is subject to revocation upon written notification. The date indicated is the effective date of the license, unless an earlier license of similar scope has been granted under 37 CFR 5.13 or 5.14.

This license is to be retained by the licensee and may be used at any time on or after the effective date thereof unless it is revoked. This license is automatically transferred to any related applications(s) filed under 37 CFR 1.53(d). This license is not retroactive.

The grant of a license does not in any way lessen the responsibility of a licensee for the security of the subject matter as imposed by any Government contract or the provisions of existing laws relating to espionage and the national security or the export of technical data. Licensees should apprise themselves of current regulations especially with respect to certain countries, of other agencies, particularly the Office of Defense Trade Controls, Department of State (with respect to Arms, Munitions and Implements of War (22 CFR 121-128)); the Bureau of Industry and Security, Department of Commerce (15 CFR parts 730-774); the Office of Foreign AssetsControl, Department of Treasury (31 CFR Parts 500+) and the Department of Energy.

NOT GRANTED

No license under 35 U.S.C. 184 has been granted at this time, if the phrase "IF REQUIRED, FOREIGN FILING LICENSE GRANTED" DOES NOT appear on this form. Applicant may still petition for a license under 37 CFR 5.12, if a license is desired before the expiration of 6 months from the filing date of the application. If 6 months has lapsed from the filing date of this application and the licensee has not received any indication of a secrecy order under 35 U.S.C. 181, the licensee may foreign file the application pursuant to 37 CFR 5.15(b).

SelectUSA

The United States represents the largest, most dynamic marketplace in the world and is an unparalleled location for business investment, innovation, and commercialization of new technologies. The U.S. offers tremendous resources and advantages for those who invest and manufacture goods here. Through SelectUSA, our nation works to promote and facilitate business investment. SelectUSA provides information assistance to the international investor

community; serves as an ombudsman for existing and potential investors; advocates on behalf of U.S. cities, states, and regions competing for global investment; and counsels U.S. economic development organizations on investment attraction best practices. To learn more about why the United States is the best country in the world to develop technology, manufacture products, deliver services, and grow your business, visit http://www.SelectUSA.gov or call +1-202-482-6800.

PTO/SB/08a (01-10)
Approved for use through 07/31/2012. OMB 0651-0031
U.S. Patent and Trademark Office; U.S. DEPARTMENT OF COMMERCE

Under the Paperwork Reduction Act of 1995, no persons are required to respond to a collection of information unless it contains a valid OMB control number.

INFORMATION DISCLOSURE STATEMENT BY APPLICANT (Not for submission under 37 CFR 1.99)		
	Application Number	17/572,388
	Filing Date	January 10, 2022
	First Named Inventor	Kameshwar Durvasula
	Art Unit	2488
	Examiner Name	
	Attorney Docket Number	105650-1292756

U.S. PATENTS

Examiner Initial*	Cite No	Patent Number	Kind Code [1]	Issue Date	Name of Patentee or Applicant of cited Document	Pages, Columns, Lines, Where Relevant Passages or Relevant Figures Appear
	1	5205174		Apr 27, 1993	Silverman et al.	
	2	5435031		Jul 25, 1995	Minami et al.	
	3	5507058		Apr 16, 1996	Minami et al.	
	4	5613261		Mar 25, 1997	Kawakami et al.	
	5	5886630		Mar 23, 1999	Menoud	
	6	7123746		Oct 17, 2006	Meniere et al.	
	7	7362351		Apr 22, 2008	Meniere et al.	
	8	7398138		Jul 8, 2008	Emery et al.	
	9	7993600		Aug 9, 2011	Doyle et al.	
	10	8007653		Aug 30, 2011	Porat	
	11	8043070		Oct 25, 2011	Stiles, Jr. et al.	
	12	9388595		Jul 12, 2016	Durvasula et al.	
	13	9995051		Jun 12, 2018	Durvasula et al.	
	14	10338599		Jul 2, 2019	Durvasula et al.	
	15	10739785		Aug 11, 2020	Durvasula et al.	
	16	11003191		May 11, 2021	Durvasula et al.	
	17	11262766		Mar 1, 2022	Durvasula et al.	

U.S. PATENT APPLICATION PUBLICATIONS

Examiner Initial*	Cite No	Publication Number	Kind Code [1]	Publication Date	Name of Patentee or Applicant of cited Document	Pages, Columns, Lines, Where Relevant Passages or Relevant Figures Appear
	18	20020097322		Jul 25, 2002	Monroe et al.	
	19	20040025268		Feb 12, 2004	Porat et al.	
	20	20040040581		Mar 4, 2004	Bruwer	
	21	20070094817		May 3, 2007	Stoltz et al.	
	22	20100299016		Nov 25, 2010	Benzler et al.	
	23	20110049023		Mar 3, 2011	Hui	

Under the Paperwork Reduction Act of 1995, no persons are required to respond to a collection of information unless it contains a valid OMB control number.

INFORMATION DISCLOSURE STATEMENT BY APPLICANT (Not for submission under 37 CFR 1.99)		
	Application Number	17/572,388
	Filing Date	January 10, 2022
	First Named Inventor	Kameshwar Durvasula
	Art Unit	2488
	Examiner Name	
	Attorney Docket Number	105650-1292756

	24	20110091329		Apr 21, 2011	Stiles, Jr. et al.	
	25	20110139727		Jun 16, 2011	Hui	
	26	20110290707		Dec 1, 2011	Porat	
	27	20110301752		Dec 8, 2011	Finezilber	
	28	20130151061		Jun 13, 2013	Hong et al.	
	29	20130152970		Jun 20, 2013	Porat	
	30	20130269097		Oct 17, 2013	Alammari	
	31	20140009748		Jan 9, 2014	Leonessa et al.	

FOREIGN PATENT DOCUMENTS

Examiner Initial*	Cite No	Foreign Document Number[3]	Country Code[2]	Kind Code[4]	Publication Date	Name of Patentee or Applicant of cited Document	Pages, Columns, Lines where Relevant Passages or Relevant Figures Appear	T[5]
	32	6162905	JP		Mar 31, 1986	Komatsu Ltd.	English Abstract Submitted	
	33	0687964	EP		Dec 20, 1995	Zeltron S.P.A.		
	34	0811432	EP		Dec 10, 1997	Jonas Pehrson		
	35	2004019295	WO		Mar 4, 2004	Aqua Products Inc.		
	36	101139007	CN		Mar 12, 2008	Beijing Institute of Technology	English Abstract Submitted	
	37	2009031361	WO		Mar 12, 2009	Yotsuyanagi Co., Ltd.	English Abstract Submitted	
	38	2012023676	WO		Feb 23, 2012	Pohang Institute of Intelligent Robotics		

NON-PATENT LITERATURE DOCUMENTS

Examiner Initials*	Cite No	Include name of the author (in CAPITAL LETTERS), title of the article (when appropriate), title of the item (book, magazine, journal, serial, symposium, catalog, etc.), date, page(s), volume-issue number(s), publisher, city and/or country where published.	T[5]
	39	U.S. Patent Application No. 13/545,918, Corrected Notice of Allowability mailed on June 8, 2016, 2 pages.	
	40	U.S. Patent Application No. 13/545,918, Non-Final Office Action mailed on June 26, 2015, 17 pages.	
	41	U.S. Patent Application No. 13/545,918, Notice of Allowability mailed on March 9, 2016, 8 pages.	

PTO/SB/08a (01-10)
Approved for use through 07/31/2012. OMB 0651-0031
U.S. Patent and Trademark Office; U.S. DEPARTMENT OF COMMERCE

Under the Paperwork Reduction Act of 1995, no persons are required to respond to a collection of information unless it contains a valid OMB control number.

INFORMATION DISCLOSURE STATEMENT BY APPLICANT (Not for submission under 37 CFR 1.99)		
	Application Number	17/572,388
	Filing Date	January 10, 2022
	First Named Inventor	Kameshwar Durvasula
	Art Unit	2488
	Examiner Name	
	Attorney Docket Number	105650-1292756

	42	U.S. Patent Application No. 13/545,918, Notice of Allowance mailed on December 31, 2015, 8 pages.	
	43	U.S. Patent Application No. 15/207,065, Non-Final Office Action mailed on November 6, 2017, 10 pages.	
	44	U.S. Patent Application No. 15/207,065, Notice of Allowance mailed on February 23, 2018, 9 pages.	
	45	U.S. Patent Application No. 15/973,983, Non-Final Office Action mailed on November 6, 2018, 7 pages.	
	46	U.S. Patent Application No. 15/973,983, Notice of Allowance mailed on March 4, 2019, 9 pages.	
	47	U.S. Patent Application No. 16/416,840, Non-Final Office Action mailed on February 28, 2020, 7 pages.	
	48	U.S. Patent Application No. 16/416,840, Non-Final Office Action mailed on January 15, 2020, 9 pages.	
	49	U.S. Patent Application No. 16/416,840, Notice of Allowability mailed on June 30, 2020, 2 pages.	
	50	U.S. Patent Application No. 16/416,840, Notice of Allowance mailed on April 29, 2020, 9 pages.	
	51	U.S. Patent Application No. 16/919,750, Non-Final Office Action mailed on October 6, 2020, 10 pages.	
	52	U.S. Patent Application No. 16/919,750, Notice of Allowance mailed on March 11, 2021, 10 pages.	
	53	U.S. Patent Application No. 17/143,624, Non-Final Office Action mailed on July 20, 2021, 18 pages.	
	54	U.S. Patent Application No. 17/143,624, Notice of Allowance mailed on December 24, 2021, 12 pages.	
	55	Spain Application No. ES2527883, Response to Substantive Examination mailed on May 5, 2016.	
	56	Spain Application No. ESP201331047, Search Report mailed on February 3, 2015, 1 page.	

PTO/SB/08a (01-10)
Approved for use through 07/31/2012. OMB 0651-0031
U.S. Patent and Trademark Office; U.S. DEPARTMENT OF COMMERCE

Under the Paperwork Reduction Act of 1995, no persons are required to respond to a collection of information unless it contains a valid OMB control number.

INFORMATION DISCLOSURE STATEMENT BY APPLICANT (Not for submission under 37 CFR 1.99)		
	Application Number	17/572,388
	Filing Date	January 10, 2022
	First Named Inventor	Kameshwar Durvasula
	Art Unit	2488
	Examiner Name	
	Attorney Docket Number	105650-1292756

EXAMINER SIGNATURE			
Examiner Signature		Date Considered	

*EXAMINER: Initial if reference considered, whether or not citation is in conformance with MPEP 609. Draw line through a citation if not in conformance and not considered. Include copy of this form with next communication to applicant.

[1] See Kind Codes of USPTO Patent Documents at www.USPTO.GOV or MPEP 901.04. [2] Enter office that issued the document, by the two-letter code (WIPO Standard ST.3). [3] For Japanese patent documents, the indication of the year of the reign of the Emperor must precede the serial number of the patent document.
[4] Kind of document by the appropriate symbols as indicated on the document under WIPO Standard ST.16 if possible. [5] Applicant is to place a check mark here if English language translation is attached.

PTO/SB/08a (01-10)
Approved for use through 07/31/2012. OMB 0651-0031
U.S. Patent and Trademark Office; U.S. DEPARTMENT OF COMMERCE

Under the Paperwork Reduction Act of 1995, no persons are required to respond to a collection of information unless it contains a valid OMB control number.

INFORMATION DISCLOSURE STATEMENT BY APPLICANT (Not for submission under 37 CFR 1.99)		
	Application Number	17/572,388
	Filing Date	January 10, 2022
	First Named Inventor	Kameshwar Durvasula
	Art Unit	2488
	Examiner Name	
	Attorney Docket Number	105650-1292756

CERTIFICATION STATEMENT

Please see 37 CFR 1.97 and 1.98 to make the appropriate selection(s):

☐ That each item of information contained in the information disclosure statement was first cited in any communication from a foreign patent office in a counterpart foreign application not more than three months prior to the filing of the information disclosure statement. See 37 CFR 1.97(e) (1).

OR

☐ That no item of information contained in the information disclosure statement was cited in a communication from a foreign patent office in a counterpart foreign application, and, to the knowledge of the person signing the certification after making reasonable inquiry, no item of information contained in the information disclosure statement was known to any individual designated in 37 CFR 1.56(c) more than three months prior to the filing of the information disclosure statement. See 37 CFR 1.97(e) (2).

☐ See attached certification statement.

☐ The fee set forth in 37 CFR 1.17 (p) has been submitted herewith.

☒ A certification statement is not submitted herewith.

SIGNATURE

A signature of the applicant or representative is required in accordance with CFR 1.33, 10.18. Please see CFR 1.4(d) for the form of the signature.

Signature	/Renae B. Wainwright/	Date (YYYY-MM-DD)	2022-03-15
Name/Print	Renae B. Wainwright	Registration Number	58,961

This collection of information is required by 37 CFR 1.97 and 1.98. The information is required to obtain or retain a benefit by the public which is to file (and by the USPTO to process) an application. Confidentiality is governed by 35 U.S.C. 122 and 37 CFR 1.14. This collection is estimated to take 1 hour to complete, including gathering, preparing and submitting the completed application form to the USPTO. Time will vary depending upon the individual case. Any comments on the amount of time you require to complete this form and/or suggestions for reducing this burden, should be sent to the Chief Information Officer, U.S. Patent and Trademark Office, U.S. Department of Commerce, P.O. Box 1450, Alexandria, VA 22313-1450. DO NOT SEND FEES OR COMPLETED FORMS TO THIS ADDRESS. **SEND TO: Commissioner for Patents, P.O. Box 1450, Alexandria, VA 22313-1450.**

Electronic Acknowledgement Receipt

EFS ID:	45231982
Application Number:	17572388
International Application Number:	
Confirmation Number:	1072
Title of Invention:	POOL CLEANING SYSTEM AND METHOD TO AUTOMATICALLY CLEAN SURFACES OF A POOL USING IMAGES FROM A CAMERA
First Named Inventor/Applicant Name:	Kameshwar Durvasula
Customer Number:	23370
Filer:	Renae Bailey Wainwright/Sandee Harvey-McCullough
Filer Authorized By:	Renae Bailey Wainwright
Attorney Docket Number:	105650-1292756
Receipt Date:	15-MAR-2022
Filing Date:	10-JAN-2022
Time Stamp:	14:54:39
Application Type:	Utility under 35 USC 111(a)

Payment information:

Submitted with Payment	no

File Listing:

Document Number	Document Description	File Name	File Size(Bytes)/ Message Digest	Multi Part /.zip	Pages (if appl.)
1	Transmittal Letter	1292756_IDSTRANS.pdf	91381 5ea3e1a72711a5fbc948fdefe5d8b220e2f90390	no	3

Warnings:

Information:					
2	Information Disclosure Statement (IDS) Form (SB08)	1292756_IDS.pdf	232014 8bcffd60ad3f5df8f5c3648726d5a48edc5dc55f	no	5
Warnings:					
Information:					
This is not an USPTO supplied IDS fillable form					
			Total Files Size (in bytes):	323395	

This Acknowledgement Receipt evidences receipt on the noted date by the USPTO of the indicated documents, characterized by the applicant, and including page counts, where applicable. It serves as evidence of receipt similar to a Post Card, as described in MPEP 503.

<u>New Applications Under 35 U.S.C. 111</u>
If a new application is being filed and the application includes the necessary components for a filing date (see 37 CFR 1.53(b)-(d) and MPEP 506), a Filing Receipt (37 CFR 1.54) will be issued in due course and the date shown on this Acknowledgement Receipt will establish the filing date of the application.
<u>National Stage of an International Application under 35 U.S.C. 371</u>
If a timely submission to enter the national stage of an international application is compliant with the conditions of 35 U.S.C. 371 and other applicable requirements a Form PCT/DO/EO/903 indicating acceptance of the application as a national stage submission under 35 U.S.C. 371 will be issued in addition to the Filing Receipt, in due course.
<u>New International Application Filed with the USPTO as a Receiving Office</u>
If a new international application is being filed and the international application includes the necessary components for an international filing date (see PCT Article 11 and MPEP 1810), a Notification of the International Application Number and of the International Filing Date (Form PCT/RO/105) will be issued in due course, subject to prescriptions concerning national security, and the date shown on this Acknowledgement Receipt will establish the international filing date of the application.

I hereby certify that this correspondence is being filed via EFS-Web with the United States Patent and Trademark Office on 2022-03-15.

KILPATRICK TOWNSEND & STOCKTON LLP

By: Sandee Harvey /Sandee Harvey/

PATENT
Attorney Docket No.: 105650-1292756

IN THE UNITED STATES PATENT AND TRADEMARK OFFICE

In re Application of:	Confirmation No.: 1072
Kameshwar Durvasula	Examiner:
Application No.: 17/572,388	Technology Center/Art Unit: 1735
Filed: January 10, 2022	
For: POOL CLEANING SYSTEM AND METHOD TO AUTOMATICALLY CLEAN SURFACES OF A POOL USING IMAGES FROM A CAMERA	INFORMATION DISCLOSURE STATEMENT
Customer No.: 23370	

Commissioner for Patents
P.O. Box 1450
Alexandria, VA 22313-1450

Commissioner:

The references cited on attached form PTO/SB/08A are being called to the attention of the Examiner. In accordance with the provisions of 37 CFR §1.98(a)(2), copies of any cited U.S. Patents and U.S. Patent Application Publications are not provided. Copies of the references are not enclosed.

In accordance with 37 CFR §1.98(d), copies of the references can be found in U.S. Patent Application No. 17/143,624 filed January 7, 2021; U.S. Patent Application No. 16/919,750 filed July 2, 2020, now U.S. Patent No. 11,003,191; U.S. Patent Application No. 16/415,840 filed May 20, 2019, now U.S. Patent No. 10,739,785; U.S. Patent Application No. 15/973,983 filed May 8,

2018, now U.S. Patent No. 10,338,599; U.S. Patent Application No. 15/207,065 filed July 11, 2016, now U.S. Patent No. 9,995,051; and U.S. Patent Application No. 13/545,918 filed July 10, 2012, now U.S. Patent No. 9,388,595.

The following applications are related to this application: U.S. Patent Application No. 17/143,624 filed January 7, 2021; U.S. Patent Application No. 16/919,750 filed July 2, 2020, now U.S. Patent No. 11,003,191; U.S. Patent Application No. 16/415,840 filed May 20, 2019, now U.S. Patent No. 10,739,785; U.S. Patent Application No. 15/973,983 filed May 8, 2018, now U.S. Patent No. 10,338,599; U.S. Patent Application No. 15/207,065 filed July 11, 2016, now U.S. Patent No. 9,995,051; and U.S. Patent Application No. 13/545,918 filed July 10, 2012, now U.S. Patent No. 9,388,595. Copies of any Office Actions in such Patent Applications are available via the USPTO's PAIR or electronic file wrapper system and are believed to be readily accessible to the Examiner. Thus, although Applicant may submit copies of some such Office Actions, Applicant does not represent that copies of all, or the most significant, Office Actions are being supplied. If the Examiner desires copies of all such Office Actions, the Examiner should contact the undersigned.

It is respectfully requested that the cited references be expressly considered during the prosecution of this application and the references be made of record therein and appear among the "references cited" on any patent to issue therefrom.

As provided for by 37 CFR §1.97(g) and (h), no inference should be made that the information and references cited are prior art merely because they are in this statement and no representation is being made that a search has been conducted or that this statement encompasses all the possible relevant information.

This Information Disclosure Statement is being filed before the mailing date of the first Office Action on the merits. Applicant believes that no fee is required for submission of this statement. However, if any fees are due for the submission of this Information Disclosure Statement, please deduct those fees from Deposit Account No. 20-1430.

Respectfully submitted,

/Renae Bailey Wainwright/

Renae Bailey Wainwright
Registration No. 58,961

KILPATRICK TOWNSEND & STOCKTON LLP

WYBOTICS EX1006
Wybotics v. Zodiac
Page 063

UNITED STATES PATENT AND TRADEMARK OFFICE

UNITED STATES DEPARTMENT OF COMMERCE
United States Patent and Trademark Office
Address: COMMISSIONER FOR PATENTS
P.O. Box 1450
Alexandria, Virginia 22313-1450
www.uspto.gov

APPLICATION NUMBER	FILING OR 371(C) DATE	FIRST NAMED APPLICANT	ATTY. DOCKET NO./TITLE
17/572,388	01/10/2022	Kameshwar Durvasula	105650-1292756

CONFIRMATION NO. 1072

PUBLICATION NOTICE

OC000000133485725

23370
Kilpatrick Townsend & Stockton LLP - East Coast
MAILSTOP: IP DOCKETING - 22
1100 PEACHTREE STREET
SUITE 2800
ATLANTA, GA 30309

Title:POOL CLEANING SYSTEM AND METHOD TO AUTOMATICALLY CLEAN SURFACES OF A POOL USING IMAGES FROM A CAMERA

Publication No.US-2022-0129005-A1
Publication Date:04/28/2022

NOTICE OF PUBLICATION OF APPLICATION

The above-identified application will be electronically published as a patent application publication pursuant to 37 CFR 1.211, et seq. The patent application publication number and publication date are set forth above.

The publication may be accessed through the USPTO's publically available Searchable Databases via the Internet at www.uspto.gov. The direct link to access the publication is currently http://www.uspto.gov/patft/.

The publication process established by the Office does not provide for mailing a copy of the publication to applicant. A copy of the publication may be obtained from the Office upon payment of the appropriate fee set forth in 37 CFR 1.19(a)(1). Orders for copies of patent application publications are handled by the USPTO's Public Records Division. The Public Records Division can be reached by telephone at (571) 272-3150 or (800) 972-6382, by facsimile at (571) 273-3250, by mail addressed to the United States Patent and Trademark Office, Public Records Division, Alexandria, VA 22313-1450 or via the Internet.

In addition, information on the status of the application, including the mailing date of Office actions and the dates of receipt of correspondence filed in the Office, may also be accessed via the Internet through the Patent Electronic Business Center at www.uspto.gov using the public side of the Patent Application Information and Retrieval (PAIR) system. The direct link to access this status information is currently https://portal.uspto.gov/pair/PublicPair. Prior to publication, such status information is confidential and may only be obtained by applicant using the private side of PAIR.

Further assistance in electronically accessing the publication, or about PAIR, is available by calling the Patent Electronic Business Center at 1-866-217-9197.

Office of Data Managment, Application Assistance Unit (571) 272-4000, or (571) 272-4200, or 1-888-786-0101

Notice of References Cited	Application/Control No. 17/572,388	Applicant(s)/Patent Under Reexamination Durvasula et al.	
	Examiner ALLEN C WONG	Art Unit 2488	Page 1 of 1

U.S. PATENT DOCUMENTS

*		Document Number Country Code-Number-Kind Code	Date MM-YYYY	Name	CPC Classification	US Classification
*	A	US-7362351-B2	04-2008	Meniere; Jerome	G06T7/20	348/135
*	B	US-20110290707-A1	12-2011	PORAT; Joseph	G06Q20/3255	204/229.4
*	C	US-20110049023-A1	03-2011	HUI; Wing-kin	E04H4/1654	210/138
	D					
	E					
	F					
	G					
	H					
	I					
	J					
	K					
	L					
	M					

FOREIGN PATENT DOCUMENTS

*		Document Number Country Code-Number-Kind Code	Date MM-YYYY	Country	Name	CPC Classification
	N					
	O					
	P					
	Q					
	R					
	S					
	T					

NON-PATENT DOCUMENTS

*		Include as applicable: Author, Title Date, Publisher, Edition or Volume, Pertinent Pages)
	U	
	V	
	W	
	X	

*A copy of this reference is not being furnished with this Office action. (See MPEP § 707.05(a).)
Dates in MM-YYYY format are publication dates. Classifications may be US or foreign.

Index of Claims	Application/Control No.	Applicant(s)/Patent Under Reexamination
	17/572,388	Durvasula et al.
	Examiner	**Art Unit**
	ALLEN C WONG	2488

✓	Rejected	-	Cancelled	N	Non-Elected	A	Appeal
=	Allowed	÷	Restricted	I	Interference	O	Objected

CLAIMS

☐ Claims renumbered in the same order as presented by applicant ☐ CPA ☐ T.D. ☐ R.1.47

CLAIM		DATE								
Final	Original	03/22/2023								
	1	-								
	2	-								
	3	-								
	4	-								
	5	-								
	6	-								
	7	-								
	8	-								
	9	-								
	10	-								
	11	-								
	12	-								
	13	-								
	14	-								
	15	-								
	16	-								
	17	-								
	18	-								
	19	-								
	20	✓								

Search Notes	Application/Control No.	Applicant(s)/Patent Under Reexamination
	17/572,388	Durvasula et al.
	Examiner	**Art Unit**
	ALLEN C WONG	2488

CPC - Searched*		
Symbol	**Date**	**Examiner**
G05D 1/0246, 0016, 0033, 0038; G05D 2201/0203; H04N 23/66, 555 ; H04N 7/18; E04H 4/1654; G06T 7/90, 001; G06T 2207/10024	03/20/2023	AW

CPC Combination Sets - Searched*		
Symbol	**Date**	**Examiner**

US Classification - Searched*			
Class	**Subclass**	**Date**	**Examiner**
348	114	03/20/2023	AW

* See search history printout included with this form or the SEARCH NOTES box below to determine the scope of the search.

Search Notes		
Search Notes	**Date**	**Examiner**
Inventor Names search	03/20/2023	AW
NPL search (eg. IP.com)	03/20/2023	AW
refs checked (US Patent Nos. 11262766, 11003191, 10739785, 10338599, 9995051, 9388595)	03/20/2023	AW
G05D 1/0246, 0016, 0033, 0038; G05D 2201/0203; H04N 23/66, 555 ; H04N 7/18; E04H 4/1654; G06T 7/90, 001; G06T 2207/10024 (see search history printout)	03/20/2023	AW
PE2E text search	03/20/2023	AW

/ALLEN C WONG/ Primary Examiner, Art Unit 2488	

WYBOTICS EX1005
Wybotics v. Zodiac
Page 067

Search Notes	Application/Control No.	Applicant(s)/Patent Under Reexamination
	17/572,388	Durvasula et al.
	Examiner	**Art Unit**
	ALLEN C WONG	2488

Interference Search			
US Class/CPC Symbol	**US Subclass/CPC Group**	**Date**	**Examiner**

/ALLEN C WONG/ Primary Examiner, Art Unit 2488	

WYBOTICS EX1006
Wybotics v. Zodiac
Page 068

UNITED STATES PATENT AND TRADEMARK OFFICE

UNITED STATES DEPARTMENT OF COMMERCE
United States Patent and Trademark Office
Address: COMMISSIONER FOR PATENTS
P.O. Box 1450
Alexandria, Virginia 22313-1450
www.uspto.gov

BIB DATA SHEET

CONFIRMATION NO. 1072

SERIAL NUMBER	FILING or 371(c) DATE	CLASS	GROUP ART UNIT	ATTORNEY DOCKET NO.
17/572,388	01/10/2022 **RULE**	348	2488	105650-1292756

APPLICANTS
ZODIAC POOL SYSTEMS LLC, Carlsbad, CA;

INVENTORS
Kameshwar Durvasula, Garfield, NJ;
William Londono Correa, Bloomfield, NJ;

**** CONTINUING DATA ***************************
This application is a CON of 17/143,624 01/07/2021 PAT 11262766
which is a CON of 16/919,750 07/02/2020 PAT 11003191
which is a CON of 16/416,840 05/20/2019 PAT 10739785
which is a CON of 15/973,983 05/08/2018 PAT 10338599
which is a CON of 15/207,065 07/11/2016 PAT 9995051
which is a CON of 13/545,918 07/10/2012 PAT 9388595

**** FOREIGN APPLICATIONS ***************************

**** IF REQUIRED, FOREIGN FILING LICENSE GRANTED ****
01/19/2022

Foreign Priority claimed ☐ Yes ☑ No 35 USC 119(a-d) conditions met ☐ Yes ☐ No Verified and Acknowledged /ALLEN C WONG/ Examiner's Signature	☐ Met after Allowance Initials	STATE OR COUNTRY	SHEETS DRAWINGS	TOTAL CLAIMS	INDEPENDENT CLAIMS
		NJ	4	1	1

ADDRESS
Kilpatrick Townsend & Stockton LLP - East Coast
MAILSTOP: IP DOCKETING - 22
1100 PEACHTREE STREET
SUITE 2800
ATLANTA, GA 30309
UNITED STATES

TITLE
POOL CLEANING SYSTEM AND METHOD TO AUTOMATICALLY CLEAN SURFACES OF A POOL USING IMAGES FROM A CAMERA

FILING FEE RECEIVED		
1820	FEES: Authority has been given in Paper No._____ to charge/credit DEPOSIT ACCOUNT No._____ for following:	☐ All Fees ☐ 1.16 Fees (Filing) ☐ 1.17 Fees (Processing Ext. of time) ☐ 1.18 Fees (Issue) ☐ Other _____ ☐ Credit

Main Concept Text
==========
automatic pool cleaner

Concept Modifiers (3)
==========
3. More Like Text: reclean threshold

2. More Like Text: filter debris

1. More Like Text: motor

(No Filters)
==========

Options
=======
De-dup: None
Relevance Cut-off: None
Sort: Relevance

Content: Non-Patent Literature (23)
==========
IEEE Xplore Publications: IEEE Periodicals
IEEE Xplore Publications: IEEE Conferences
IEEE Xplore Publications: IEEE Standards
IEEE Xplore Publications: IEEE Early Access
IEEE Xplore Publications: SMPTE Periodicals
IEEE Xplore Publications: SMPTE Conferences
IEEE Xplore Publications: SMPTE Standards
IEEE Xplore Publications: MIT Press eBooks
IEEE Xplore Publications: Wiley-IEEE eBooks
IEEE Xplore Publications: IBM Periodicals
IEEE Xplore Publications: URSI Periodicals
IEEE Xplore Publications: VDE Conferences
IEEE Xplore Publications: Periodicals from China
IP.com Prior Art Database: The IP.com Journal
IP.com Prior Art Database: Internet Society RFC
IP.com Prior Art Database: IBM TDB Archive
IP.com Prior Art Database: Legacy Journals
IP.com Prior Art Database: Software Patent Institute
OnePetro.org: Periodicals at OnePetro.org
OnePetro.org: Conferences at OnePetro.org
Other Literature: IBM Redbooks
Other Literature: PubMed Central
Other Literature: arXiv.org

Doc code: IDS
Doc description: Information Disclosure Statement (IDS) Field

PTO/SB/08a (01-10)
Approved for use through 07/31/2012. OMB 0651-0031
U.S. Patent and Trademark Office; U.S. DEPARTMENT OF COMMERCE
Under the Paperwork Reduction Act of 1995, no persons are required to respond to a collection of information unless it contains a valid OMB control number.

INFORMATION DISCLOSURE STATEMENT BY APPLICANT (Not for submission under 37 CFR 1.99)		
	Application Number	17/572,388
	Filing Date	January 10, 2022
	First Named Inventor	Kameshwar Durvasula
	Art Unit	2488
	Examiner Name	
	Attorney Docket Number	105650-1292756

U.S. PATENTS

Examiner Initial*	Cite No	Patent Number	Kind Code [1]	Issue Date	Name of Patentee or Applicant of cited Document	Pages, Columns, Lines, Where Relevant Passages or Relevant Figures Appear
	1	5205174		Apr 27, 1993	Silverman et al.	
	2	5435031		Jul 25, 1995	Minami et al.	
	3	5507058		Apr 16, 1996	Minami et al.	
	4	5613261		Mar 25, 1997	Kawakami et al.	
	5	5886630		Mar 23, 1999	Menoud	
	6	7123746		Oct 17, 2006	Meniere et al.	
	7	7362351		Apr 22, 2008	Meniere et al.	
	8	7398138		Jul 8, 2008	Emery et al.	
	9	7993600		Aug 9, 2011	Doyle et al.	
	10	8007653		Aug 30, 2011	Porat	
	11	8043070		Oct 25, 2011	Stiles, Jr. et al.	
	12	9388595		Jul 12, 2016	Durvasula et al.	
	13	9995051		Jun 12, 2018	Durvasula et al.	
	14	10338599		Jul 2, 2019	Durvasula et al.	
	15	10739785		Aug 11, 2020	Durvasula et al.	
	16	11003191		May 11, 2021	Durvasula et al.	
	17	11262766		Mar 1, 2022	Durvasula et al.	

U.S. PATENT APPLICATION PUBLICATIONS

Examiner Initial*	Cite No	Publication Number	Kind Code [1]	Publication Date	Name of Patentee or Applicant of cited Document	Pages, Columns, Lines, Where Relevant Passages or Relevant Figures Appear
	18	20020097322		Jul 25, 2002	Monroe et al.	
	19	20040025268		Feb 12, 2004	Porat et al.	
	20	20040040581		Mar 4, 2004	Bruwer	
	21	20070094817		May 3, 2007	Stoltz et al.	
	22	20100299016		Nov 25, 2010	Benzler et al.	
	23	20110049023		Mar 3, 2011	Hui	

/ALLEN C WONG/ 03/20/2023

ALL REFERENCES CONSIDERED EXCEPT WHERE LINED THROUGH. /A.W./

Doc code: IDS
Doc description: Information Disclosure Statement (IDS) Field

PTO/SB/08a (01-10)
Approved for use through 07/31/2012. OMB 0651-0031
U.S. Patent and Trademark Office; U.S. DEPARTMENT OF COMMERCE
Under the Paperwork Reduction Act of 1995, no persons are required to respond to a collection of information unless it contains a valid OMB control number.

INFORMATION DISCLOSURE STATEMENT BY APPLICANT (Not for submission under 37 CFR 1.99)		
	Application Number	17/572,388
	Filing Date	January 10, 2022
	First Named Inventor	Kameshwar Durvasula
	Art Unit	2488
	Examiner Name	
	Attorney Docket Number	105650-1292756

	24	20110091329		Apr 21, 2011	Stiles, Jr. et al.	
	25	20110139727		Jun 16, 2011	Hui	
	26	20110290707		Dec 1, 2011	Porat	
	27	20110301752		Dec 8, 2011	Finezilber	
	28	20130151061		Jun 13, 2013	Hong et al.	
	29	20130152970		Jun 20, 2013	Porat	
	30	20130269097		Oct 17, 2013	Alammari	
	31	20140009748		Jan 9, 2014	Leonessa et al.	

FOREIGN PATENT DOCUMENTS

Examiner Initial*	Cite No	Foreign Document Number[3]	Country Code[2]	Kind Code[4]	Publication Date	Name of Patentee or Applicant of cited Document	Pages, Columns, Lines where Relevant Passages or Relevant Figures Appear	T[5]
	32	6162905	JP		Mar 31, 1986	Komatsu Ltd.	English Abstract Submitted	
	33	0687964	EP		Dec 20, 1995	Zeltron S.P.A.		
	34	0811432	EP		Dec 10, 1997	Jonas Pehrson		
	35	2004019295	WO		Mar 4, 2004	Aqua Products Inc.		
	36	101139007	CN		Mar 12, 2008	Beijing Institute of Technology	English Abstract Submitted	
	37	2009031361	WO		Mar 12, 2009	Yotsuyanagi Co., Ltd.	English Abstract Submitted	
	38	2012023676	WO		Feb 23, 2012	Pohang Institute of Intelligent Robotics		

NON-PATENT LITERATURE DOCUMENTS

Examiner Initials*	Cite No	Include name of the author (in CAPITAL LETTERS), title of the article (when appropriate), title of the item (book, magazine, journal, serial, symposium, catalog, etc.), date, page(s), volume-issue number(s), publisher, city and/or country where published.	T[5]
	39	U.S. Patent Application No. 13/545,918, Corrected Notice of Allowability mailed on June 8, 2016, 2 pages.	
	40	U.S. Patent Application No. 13/545,918, Non-Final Office Action mailed on June 26, 2015, 17 pages.	
	41	U.S. Patent Application No. 13/545,918, Notice of Allowability mailed on March 9, 2016, 8 pages.	

/ALLEN C WONG/ 03/20/2023

ALL REFERENCES CONSIDERED EXCEPT WHERE LINED THROUGH. /A.W./

Doc code: IDS
Doc description: Information Disclosure Statement (IDS) Field

PTO/SB/08a (01-10)
Approved for use through 07/31/2012. OMB 0651-0031
U.S. Patent and Trademark Office; U.S. DEPARTMENT OF COMMERCE
Under the Paperwork Reduction Act of 1995, no persons are required to respond to a collection of information unless it contains a valid OMB control number.

INFORMATION DISCLOSURE STATEMENT BY APPLICANT (Not for submission under 37 CFR 1.99)		
	Application Number	17/572,388
	Filing Date	January 10, 2022
	First Named Inventor	Kameshwar Durvasula
	Art Unit	2488
	Examiner Name	
	Attorney Docket Number	105650-1292756

	42	U.S. Patent Application No. 13/545,918, Notice of Allowance mailed on December 31, 2015, 8 pages.	
	43	U.S. Patent Application No. 15/207,065, Non-Final Office Action mailed on November 6, 2017, 10 pages.	
	44	U.S. Patent Application No. 15/207,065, Notice of Allowance mailed on February 23, 2018, 9 pages.	
	45	U.S. Patent Application No. 15/973,983, Non-Final Office Action mailed on November 6, 2018, 7 pages.	
	46	U.S. Patent Application No. 15/973,983, Notice of Allowance mailed on March 4, 2019, 9 pages.	
	47	U.S. Patent Application No. 16/416,840, Non-Final Office Action mailed on February 28, 2020, 7 pages.	
	48	U.S. Patent Application No. 16/416,840, Non-Final Office Action mailed on January 15, 2020, 9 pages.	
	49	U.S. Patent Application No. 16/416,840, Notice of Allowability mailed on June 30, 2020, 2 pages.	
	50	U.S. Patent Application No. 16/416,840, Notice of Allowance mailed on April 29, 2020, 9 pages.	
	51	U.S. Patent Application No. 16/919,750, Non-Final Office Action mailed on October 6, 2020, 10 pages.	
	52	U.S. Patent Application No. 16/919,750, Notice of Allowance mailed on March 11, 2021, 10 pages.	
	53	U.S. Patent Application No. 17/143,624, Non-Final Office Action mailed on July 20, 2021, 18 pages.	
	54	U.S. Patent Application No. 17/143,624, Notice of Allowance mailed on December 24, 2021, 12 pages.	
	55	Spain Application No. ES2527883, Response to Substantive Examination mailed on May 5, 2016.	
	56	Spain Application No. ESP201331047, Search Report mailed on February 3, 2015, 1 page.	

/ALLEN C WONG/ 03/20/2023

ALL REFERENCES CONSIDERED EXCEPT WHERE LINED THROUGH. /A.W./

Doc code: IDS
Doc description: Information Disclosure Statement (IDS) Field

PTO/SB/08a (01-10)
Approved for use through 07/31/2012. OMB 0651-0031
U.S. Patent and Trademark Office; U.S. DEPARTMENT OF COMMERCE
Under the Paperwork Reduction Act of 1995, no persons are required to respond to a collection of information unless it contains a valid OMB control number.

INFORMATION DISCLOSURE STATEMENT BY APPLICANT (Not for submission under 37 CFR 1.99)		
	Application Number	17/572,388
	Filing Date	January 10, 2022
	First Named Inventor	Kameshwar Durvasula
	Art Unit	2488
	Examiner Name	
	Attorney Docket Number	105650-1292756

EXAMINER SIGNATURE			
Examiner Signature	/ALLEN C WONG/	Date Considered	03/20/2023

*EXAMINER: Initial if reference considered, whether or not citation is in conformance with MPEP 609. Draw line through a citation if not in conformance and not considered. Include copy of this form with next communication to applicant.

[1] See Kind Codes of USPTO Patent Documents at www.USPTO.GOV or MPEP 901.04. [2] Enter office that issued the document, by the two-letter code (WIPO Standard ST.3). [3] For Japanese patent documents, the indication of the year of the reign of the Emperor must precede the serial number of the patent document.
[4] Kind of document by the appropriate symbols as indicated on the document under WIPO Standard ST.16 if possible. [5] Applicant is to place a check mark here if English language translation is attached.

ALL REFERENCES CONSIDERED EXCEPT WHERE LINED THROUGH. /A.W./

PE2E SEARCH - Search History (Prior Art)

Ref #	Hits	Search Query	DBs	Default Operator	Plurals	British Equivalents	Time Stamp
L1	45	durvasula-kameshwar.in.	(US-PGPUB; USPAT; EPO)	OR	ON	ON	2023/03/20 06:13 PM
L2	2	correa-william.in.	(US-PGPUB; USPAT; EPO)	OR	ON	ON	2023/03/20 06:13 PM
L3	25	correa-william-londono.in.	(US-PGPUB; USPAT; EPO)	OR	ON	ON	2023/03/20 06:13 PM
L4	402	(zodiac ADJ pool).as.	(US-PGPUB; USPAT; EPO)	OR	ON	ON	2023/03/20 06:13 PM
L5	133	348/114.ccls.	(US-PGPUB; USPAT; EPO)	OR	ON	ON	2023/03/20 06:14 PM
L6	6334	G05D1/0246.cpc.	(US-PGPUB; USPAT; EPO)	OR	ON	ON	2023/03/20 06:14 PM
L7	2879	G05D1/0016.cpc.	(US-PGPUB; USPAT; EPO)	OR	ON	ON	2023/03/20 06:14 PM
L8	850	G05D1/0033.cpc.	(US-PGPUB; USPAT; EPO)	OR	ON	ON	2023/03/20 06:15 PM
L9	2307	G05D1/0038.cpc.	(US-PGPUB; USPAT; EPO)	OR	ON	ON	2023/03/20 06:15 PM
L10	2814	G05D2201/0203.cpc.	(US-PGPUB; USPAT; EPO)	OR	ON	ON	2023/03/20 06:15 PM
L11	5513	H04N23/66.cpc.	(US-PGPUB; USPAT; EPO)	OR	ON	ON	2023/03/20 06:15 PM
L12	5157	H04N23/555.cpc.	(US-PGPUB; USPAT; EPO)	OR	ON	ON	2023/03/20 06:16 PM
L13	11671	H04N7/18.cpc.	(US-PGPUB; USPAT; EPO)	OR	ON	ON	2023/03/20 06:16 PM
L14	1248	E04H4/1654.cpc.	(US-PGPUB; USPAT; EPO)	OR	ON	ON	2023/03/20 06:16 PM
L15	9303	G06T7/90.cpc.	(US-PGPUB; USPAT; EPO)	OR	ON	ON	2023/03/20 06:17 PM
L16	7220	G06T7/001.cpc.	(US-PGPUB; USPAT; EPO)	OR	ON	ON	2023/03/20 06:17 PM
L17	18127	G06T2207/10024.cpc.	(US-PGPUB; USPAT; EPO)	OR	ON	ON	2023/03/20 06:17 PM
L18	712	6 AND 10	(US-PGPUB; USPAT; EPO)	OR	ON	ON	2023/03/20 06:22 PM
L19	235	6 AND 13	(US-PGPUB; USPAT; EPO)	OR	ON	ON	2023/03/20 06:22 PM
L20	24	("10338599"|"10739785"|"11003191"|"11262766"|"20020097322"|"20040025268"|"20040040581"|"20070094817"|"20100299016"|"20110049023"|"5205174"|"5435031"|"5507058"|"5613261"|"5886630"|"7123746"	(US-PGPUB; USPAT; EPO)	OR	ON	ON	2023/03/20 06:24 PM

		|"7362351"|"7398138"|"7993600"|"8007653"|"8043070"|"9388595"|"9995051").PN.					
L21	1287	((self-propell$4) OR auto OR automatic$4) near4 ((swim$4 near2 pool) OR pool) near2 (clean$3 OR re-clean$3 OR reclean$3)	(US-PGPUB; USPAT; EPO)	OR	ON	ON	2023/03/20 06:24 PM
L22	36	21 AND 1	(US-PGPUB; USPAT; EPO)	OR	ON	ON	2023/03/20 06:24 PM
L23	0	21 AND 2	(US-PGPUB; USPAT; EPO)	OR	ON	ON	2023/03/20 06:24 PM
L24	16	21 AND 3	(US-PGPUB; USPAT; EPO)	OR	ON	ON	2023/03/20 06:24 PM
L25	141	21 AND 4	(US-PGPUB; USPAT; EPO)	OR	ON	ON	2023/03/20 06:24 PM
L26	1	21 AND 5	(US-PGPUB; USPAT; EPO)	OR	ON	ON	2023/03/20 06:24 PM
L27	16	21 AND 6	(US-PGPUB; USPAT; EPO)	OR	ON	ON	2023/03/20 06:24 PM
L28	19	21 AND 7	(US-PGPUB; USPAT; EPO)	OR	ON	ON	2023/03/20 06:24 PM
L29	13	21 AND 8	(US-PGPUB; USPAT; EPO)	OR	ON	ON	2023/03/20 06:24 PM
L30	17	21 AND 9	(US-PGPUB; USPAT; EPO)	OR	ON	ON	2023/03/20 06:24 PM
L31	46	21 AND 10	(US-PGPUB; USPAT; EPO)	OR	ON	ON	2023/03/20 06:24 PM
L32	13	21 AND 11	(US-PGPUB; USPAT; EPO)	OR	ON	ON	2023/03/20 06:24 PM
L33	13	21 AND 12	(US-PGPUB; USPAT; EPO)	OR	ON	ON	2023/03/20 06:24 PM
L34	13	21 AND 13	(US-PGPUB; USPAT; EPO)	OR	ON	ON	2023/03/20 06:24 PM
L35	688	21 AND 14	(US-PGPUB; USPAT; EPO)	OR	ON	ON	2023/03/20 06:24 PM
L36	13	21 AND 15	(US-PGPUB; USPAT; EPO)	OR	ON	ON	2023/03/20 06:25 PM
L37	13	21 AND 16	(US-PGPUB; USPAT; EPO)	OR	ON	ON	2023/03/20 06:25 PM
L38	13	21 AND 17	(US-PGPUB; USPAT; EPO)	OR	ON	ON	2023/03/20 06:25 PM
L39	639	(camera$1 OR imager$1) WITH (CPU OR processor OR (control ADJ unit) OR controller) WITH motor WITH filter$3	(US-PGPUB; USPAT; EPO)	OR	ON	ON	2023/03/20 07:57 PM
L40	15	pool near2 clean$3	(US-PGPUB; USPAT;	OR	ON	ON	2023/03/20

		WITH camera$1 WITH motor$3	EPO)				07:57 PM
L41	119	pool near2 clean$3 WITH camera$1	(US-PGPUB; USPAT; EPO)	OR	ON	ON	2023/03/20 07:57 PM
L42	147	pool near2 clean$3 SAME camera$1	(US-PGPUB; USPAT; EPO)	OR	ON	ON	2023/03/20 07:58 PM
L43	1056	pool near2 clean$3 WITH (processor$1 OR control$4)	(US-PGPUB; USPAT; EPO)	OR	ON	ON	2023/03/20 07:58 PM
L44	41	43 AND 1	(US-PGPUB; USPAT; EPO)	OR	ON	ON	2023/03/20 07:59 PM
L45	0	43 AND 2	(US-PGPUB; USPAT; EPO)	OR	ON	ON	2023/03/20 07:59 PM
L46	18	43 AND 3	(US-PGPUB; USPAT; EPO)	OR	ON	ON	2023/03/20 07:59 PM
L47	57	43 AND 4	(US-PGPUB; USPAT; EPO)	OR	ON	ON	2023/03/20 07:59 PM
L48	1	43 AND 5	(US-PGPUB; USPAT; EPO)	OR	ON	ON	2023/03/20 07:59 PM
L49	588	43 AND (6 OR 7 OR 8 OR 9 OR 10 OR 11 OR 12 OR 13 OR 14 OR 15 OR 16 OR 17)	(US-PGPUB; USPAT; EPO)	OR	ON	ON	2023/03/20 07:59 PM
L50	94	(aqua ADJ products).as.	(US-PGPUB; USPAT; EPO)	OR	ON	ON	2023/03/20 08:04 PM
L51	2	(chemical near2 dispenser) WITH (camera$1 OR imager$1) WITH (CPU OR processor OR (control ADJ unit) OR controller) WITH motor WITH filter$3	(US-PGPUB; USPAT; EPO)	OR	ON	ON	2023/03/20 08:30 PM
L52	2	(chemical near2 dispenser) SAME (camera$1 OR imager$1) WITH (CPU OR processor OR (control ADJ unit) OR controller) WITH motor WITH filter$3	(US-PGPUB; USPAT; EPO)	OR	ON	ON	2023/03/20 08:30 PM
L53	11	(chemical near2 dispenser) AND (camera$1 OR imager$1) WITH (CPU OR processor OR (control ADJ unit) OR controller) WITH motor WITH filter$3	(US-PGPUB; USPAT; EPO)	OR	ON	ON	2023/03/20 08:30 PM
L54	0	(chemical near2 dispenser) WITH pool near2 clean$3 WITH camera$1	(US-PGPUB; USPAT; EPO)	OR	ON	ON	2023/03/20 08:32 PM

L55	0	(chemical near2 dispenser) SAME pool near2 clean$3 WITH camera$1	(US-PGPUB; USPAT; EPO)	OR	ON	ON	2023/03/20 08:32 PM
L56	17	(chemical near2 dispenser) AND pool near2 clean$3 WITH camera$1	(US-PGPUB; USPAT; EPO)	OR	ON	ON	2023/03/20 08:32 PM
L57	119	(chemical near2 dispenser) AND pool near2 clean$3	(US-PGPUB; USPAT; EPO)	OR	ON	ON	2023/03/20 08:32 PM
L58	34	pool near2 clean$3 SAME camera$1 SAME (control$4 OR processor$1) SAME filter$3	(US-PGPUB; USPAT; EPO)	OR	ON	ON	2023/03/20 08:32 PM
L59	73	pool near4 clean$3 WITH camera WITH (processor OR controller OR CPU)	(US-PGPUB; USPAT; EPO)	OR	ON	ON	2023/03/20 08:33 PM
L60	485	((swim$4 near2 pool) OR pool) near4 clean$3 WITH (processor OR controller OR CPU)	(US-PGPUB; USPAT; EPO)	OR	ON	ON	2023/03/20 08:33 PM
L61	102	((swim$4 near2 pool) OR pool) near4 clean$3 SAME camera SAME (processor OR controller OR CPU)	(US-PGPUB; USPAT; EPO)	OR	ON	ON	2023/03/20 08:33 PM
L62	547	pool near2 clean$3 near4 robot$1	(US-PGPUB; USPAT; EPO)	OR	ON	ON	2023/03/20 08:35 PM
L63	195	(pool near2 clean$3 near4 robot$1) AND camera$1	(US-PGPUB; USPAT; EPO)	OR	ON	ON	2023/03/20 08:35 PM
L64	72	(pool near2 clean$3 near4 robot$1) SAME camera$1	(US-PGPUB; USPAT; EPO)	OR	ON	ON	2023/03/20 08:35 PM
L65	11	62 AND 1	(US-PGPUB; USPAT; EPO)	OR	ON	ON	2023/03/20 08:36 PM
L66	0	62 AND 2	(US-PGPUB; USPAT; EPO)	OR	ON	ON	2023/03/20 08:36 PM
L67	3	62 AND 3	(US-PGPUB; USPAT; EPO)	OR	ON	ON	2023/03/20 08:36 PM
L68	40	62 AND 4	(US-PGPUB; USPAT; EPO)	OR	ON	ON	2023/03/20 08:36 PM
L69	0	62 AND 5	(US-PGPUB; USPAT; EPO)	OR	ON	ON	2023/03/20 08:36 PM
L70	364	62 AND (6 OR 7 OR 8 OR 9 OR 10 OR 11 OR 12 OR 13 OR 14 OR 15 OR 16 OR 17)	(US-PGPUB; USPAT; EPO)	OR	ON	ON	2023/03/20 08:36 PM
L71	66	(pool near2 clean$3 near4 robot$1) WITH	(US-PGPUB; USPAT; EPO)	OR	ON	ON	2023/03/20 10:50 PM

		camera$1					
L72	27	((swim$4 near2 pool) OR pool) near4 clean$3 AND camera SAME (processor OR controller OR CPU) WITH motor	(US-PGPUB; USPAT; EPO)	OR	ON	ON	2023/03/20 10:50 PM
L73	50	((swim$4 near2 pool) OR pool) near4 clean$3 AND camera SAME (processor OR controller OR CPU) SAME motor	(US-PGPUB; USPAT; EPO)	OR	ON	ON	2023/03/20 10:51 PM
L74	2	(reclean$3 OR re-clean$3) near8 ((swim$4 near2 pool$1) OR pool$1) WITH motor	(US-PGPUB; USPAT; EPO)	OR	ON	ON	2023/03/20 10:51 PM
L75	2	(reclean$3 OR re-clean$3) near8 ((swim$4 near2 pool$1) OR pool$1) SAME motor	(US-PGPUB; USPAT; EPO)	OR	ON	ON	2023/03/20 10:51 PM
L76	13	(reclean$3 OR re-clean$3) near8 ((swim$4 near2 pool$1) OR pool$1) SAME (processor$1 OR controller OR CPU)	(US-PGPUB; USPAT; EPO)	OR	ON	ON	2023/03/20 10:51 PM
L77	13	(reclean$3 OR re-clean$3) near8 ((swim$4 near2 pool$1) OR pool$1) WITH (processor$1 OR controller OR CPU)	(US-PGPUB; USPAT; EPO)	OR	ON	ON	2023/03/20 10:52 PM
L78	195	((swim$4 near2 pool) OR pool) near4 clean$3 AND camera SAME (processor OR controller OR CPU) SAME (display$3 OR monitor$4)	(US-PGPUB; USPAT; EPO)	OR	ON	ON	2023/03/20 10:52 PM
L79	14	((swim$4 near2 pool) OR pool) near4 clean$3 WITH (clean OR cleanness OR neatness OR cleanliness) near2 (threshold$1 OR value$1)	(US-PGPUB; USPAT; EPO)	OR	ON	ON	2023/03/20 10:52 PM
L80	14	((swim$4 near2 pool) OR pool) near4 clean$3 SAME (clean OR cleanness OR neatness OR cleanliness) near2 (threshold$1 OR	(US-PGPUB; USPAT; EPO)	OR	ON	ON	2023/03/20 10:52 PM

		value$1)					
L81	51	((swim$4 near2 pool) OR pool) near4 clean$3 AND (clean OR cleanness OR neatness OR cleanliness) near2 (threshold$1 OR value$1)	(US-PGPUB; USPAT; EPO)	OR	ON	ON	2023/03/20 10:52 PM
L82	66	(pool near2 clean$3 near4 robot$1) WITH camera$1	(US-PGPUB; USPAT; EPO)	OR	ON	ON	2023/03/20 10:53 PM
L83	16	78 AND 21	(US-PGPUB; USPAT; EPO)	OR	ON	ON	2023/03/20 10:55 PM
L84	0	82 AND 81	(US-PGPUB; USPAT; EPO)	OR	ON	ON	2023/03/20 10:57 PM
L85	0	82 AND 77	(US-PGPUB; USPAT; EPO)	OR	ON	ON	2023/03/20 10:57 PM
L86	13	21 AND 81	(US-PGPUB; USPAT; EPO)	OR	ON	ON	2023/03/20 10:59 PM
L87	51	((swim$4 near2 pool) OR pool) near4 clean$3 WITH (clean OR cleanness OR neatness OR cleanliness) near4 (characteristic$1 OR threshold$1 OR value$1 OR number$1)	(US-PGPUB; USPAT; EPO)	OR	ON	ON	2023/03/20 11:01 PM
L88	54	((swim$4 near2 pool) OR pool) near4 clean$3 SAME (clean OR cleanness OR neatness OR cleanliness) near4 (characteristic$1 OR threshold$1 OR value$1 OR number$1)	(US-PGPUB; USPAT; EPO)	OR	ON	ON	2023/03/20 11:02 PM
L89	18	((swim$4 near2 pool) OR pool) WITH (clean OR cleanness OR neatness OR cleanliness) near4 (characteristic$1 OR threshold$1 OR value$1 OR number$1) WITH (water OR underwater)	(US-PGPUB; USPAT; EPO)	OR	ON	ON	2023/03/20 11:02 PM
L90	26	(((swim$4 near2 pool) OR pool) OR water OR underwater) near4 (image OR picture) WITH compar$3 WITH threshold$1	(US-PGPUB; USPAT; EPO)	OR	ON	ON	2023/03/20 11:02 PM
L91	81	((swim$4 near2 pool) OR pool) WITH (clean OR cleanness OR	(US-PGPUB; USPAT; EPO)	OR	ON	ON	2023/03/20 11:02 PM

		neatness OR cleanliness) near4 (characteristic$1 OR threshold$1 OR value$1 OR number$1)					
L92	182	((swim$4 near2 pool) OR pool) near4 clean$3 AND (clean OR cleanness OR neatness OR cleanliness) near4 (characteristic$1 OR threshold$1 OR value$1 OR number$1)	(US-PGPUB; USPAT; EPO)	OR	ON	ON	2023/03/20 11:03 PM
L93	485	((swim$4 near2 pool) OR pool) near4 clean$3 WITH (processor OR controller OR CPU)	(US-PGPUB; USPAT; EPO)	OR	ON	ON	2023/03/20 11:03 PM
L94	40	93 AND 1	(US-PGPUB; USPAT; EPO)	OR	ON	ON	2023/03/20 11:08 PM
L95	0	93 AND 2	(US-PGPUB; USPAT; EPO)	OR	ON	ON	2023/03/20 11:08 PM
L96	15	93 AND 3	(US-PGPUB; USPAT; EPO)	OR	ON	ON	2023/03/20 11:08 PM
L97	21	93 AND 4	(US-PGPUB; USPAT; EPO)	OR	ON	ON	2023/03/20 11:08 PM
L98	1	93 AND 5	(US-PGPUB; USPAT; EPO)	OR	ON	ON	2023/03/20 11:08 PM
L99	345	93 AND (6 OR 7 OR 8 OR 9 OR 10 OR 11 OR 12 OR 13 OR 14 OR 15 OR 16 OR 17)	(US-PGPUB; USPAT; EPO)	OR	ON	ON	2023/03/20 11:08 PM
L100	21	43 AND 92	(US-PGPUB; USPAT; EPO)	OR	ON	ON	2023/03/20 11:09 PM
L102	13	43 AND 77	(US-PGPUB; USPAT; EPO)	OR	ON	ON	2023/03/20 11:09 PM
L103	12	(reclean$3 OR re-clean$3 OR (clean$3 near2 (again OR repetitive$3))) WITH pool$1 WITH (debris OR trash)	(US-PGPUB; USPAT; EPO)	OR	ON	ON	2023/03/21 03:26 PM

PE2E SEARCH - Search History (Interference)

There are no Interference searches to show.

UNITED STATES PATENT AND TRADEMARK OFFICE

UNITED STATES DEPARTMENT OF COMMERCE
United States Patent and Trademark Office
Address: COMMISSIONER FOR PATENTS
P.O. Box 1450
Alexandria, Virginia 22313-1450
www.uspto.gov

APPLICATION NO.	FILING DATE	FIRST NAMED INVENTOR	ATTORNEY DOCKET NO.	CONFIRMATION NO.
17/572,388	01/10/2022	Kameshwar Durvasula	105650-1292756	1072

23370 7590 03/27/2023
Kilpatrick Townsend & Stockton LLP - East Coast
MAILSTOP: IP DOCKETING - 22
1100 PEACHTREE STREET
SUITE 2800
ATLANTA, GA 30309

EXAMINER
WONG, ALLEN C

ART UNIT	PAPER NUMBER
2488	

NOTIFICATION DATE	DELIVERY MODE
03/27/2023	ELECTRONIC

Please find below and/or attached an Office communication concerning this application or proceeding.

The time period for reply, if any, is set in the attached communication.

Notice of the Office communication was sent electronically on above-indicated "Notification Date" to the following e-mail address(es):

KTSDocketing2@kilpatrick.foundationip.com
ipefiling@kilpatricktownsend.com

Office Action Summary	Application No. 17/572,388	Applicant(s) Durvasula et al.	
	Examiner ALLEN C WONG	Art Unit 2488	AIA (FITF) Status Yes

-- The MAILING DATE of this communication appears on the cover sheet with the correspondence address --

Period for Reply

A SHORTENED STATUTORY PERIOD FOR REPLY IS SET TO EXPIRE 3 MONTHS FROM THE MAILING DATE OF THIS COMMUNICATION.

- Extensions of time may be available under the provisions of 37 CFR 1.136(a). In no event, however, may a reply be timely filed after SIX (6) MONTHS from the mailing date of this communication.
- If NO period for reply is specified above, the maximum statutory period will apply and will expire SIX (6) MONTHS from the mailing date of this communication.
- Failure to reply within the set or extended period for reply will, by statute, cause the application to become ABANDONED (35 U.S.C. § 133). Any reply received by the Office later than three months after the mailing date of this communication, even if timely filed, may reduce any earned patent term adjustment. See 37 CFR 1.704(b).

Status

1)☐ Responsive to communication(s) filed on _____.

☐ A declaration(s)/affidavit(s) under **37 CFR 1.130(b)** was/were filed on _____.

2a)☐ This action is **FINAL.** 2b) ☑ This action is non-final.

3)☐ An election was made by the applicant in response to a restriction requirement set forth during the interview on _____; the restriction requirement and election have been incorporated into this action.

4)☐ Since this application is in condition for allowance except for formal matters, prosecution as to the merits is closed in accordance with the practice under *Ex parte Quayle*, 1935 C.D. 11, 453 O.G. 213.

Disposition of Claims*

5) ☑ Claim(s) 20 is/are pending in the application.

5a) Of the above claim(s) _____ is/are withdrawn from consideration.

6) ☐ Claim(s) _____ is/are allowed.

7) ☑ Claim(s) 20 is/are rejected.

8) ☐ Claim(s) _____ is/are objected to.

9) ☐ Claim(s) _____ are subject to restriction and/or election requirement

* If any claims have been determined allowable, you may be eligible to benefit from the **Patent Prosecution Highway** program at a participating intellectual property office for the corresponding application. For more information, please see http://www.uspto.gov/patents/init_events/pph/index.jsp or send an inquiry to **PPHfeedback@uspto.gov.**

Application Papers

10)☐ The specification is objected to by the Examiner.

11)☑ The drawing(s) filed on 1/10/22 is/are: a)☑ accepted or b)☐ objected to by the Examiner.

Applicant may not request that any objection to the drawing(s) be held in abeyance. See 37 CFR 1.85(a).

Replacement drawing sheet(s) including the correction is required if the drawing(s) is objected to. See 37 CFR 1.121(d).

Priority under 35 U.S.C. § 119

12)☐ Acknowledgment is made of a claim for foreign priority under 35 U.S.C. § 119(a)-(d) or (f).

Certified copies:

a)☐ All b)☐ Some** c)☐ None of the:

1.☐ Certified copies of the priority documents have been received.

2.☐ Certified copies of the priority documents have been received in Application No. _____.

3.☐ Copies of the certified copies of the priority documents have been received in this National Stage application from the International Bureau (PCT Rule 17.2(a)).

** See the attached detailed Office action for a list of the certified copies not received.

Attachment(s)

1) ☑ Notice of References Cited (PTO-892)

2) ☑ Information Disclosure Statement(s) (PTO/SB/08a and/or PTO/SB/08b) Paper No(s)/Mail Date _____.

3) ☐ Interview Summary (PTO-413) Paper No(s)/Mail Date _____.

4) ☐ Other: _____.

WYBOTICS EX1006
Wybotics v. Zodiac
Page 083

DETAILED ACTION

Notice of Pre-AIA or AIA Status

The present application is being examined under the pre-AIA first to invent provisions.

Information Disclosure Statement

The information disclosure statement (IDS) submitted on 3/15/22 is in compliance with the provisions of 37 CFR 1.97. Accordingly, the information disclosure statement has been considered by the examiner.

Double Patenting

The nonstatutory double patenting rejection is based on a judicially created doctrine grounded in public policy (a policy reflected in the statute) so as to prevent the unjustified or improper timewise extension of the "right to exclude" granted by a patent and to prevent possible harassment by multiple assignees. A nonstatutory double patenting rejection is appropriate where the conflicting claims are not identical, but at least one examined application claim is not patentably distinct from the reference claim(s) because the examined application claim is either anticipated by, or would have been obvious over, the reference claim(s). See, e.g., *In re Berg*, 140 F.3d 1428, 46 USPQ2d 1226 (Fed. Cir. 1998); *In re Goodman*, 11 F.3d 1046, 29 USPQ2d 2010 (Fed. Cir. 1993); *In re Longi*, 759 F.2d 887, 225 USPQ 645 (Fed. Cir. 1985); *In re Van Ornum*, 686 F.2d 937, 214 USPQ 761 (CCPA 1982); *In re Vogel*, 422 F.2d 438, 164 USPQ 619 (CCPA 1970); *In re Thorington*, 418 F.2d 528, 163 USPQ 644 (CCPA 1969).

A timely filed terminal disclaimer in compliance with 37 CFR 1.321(c) or 1.321(d) may be used to overcome an actual or provisional rejection based on nonstatutory double patenting provided the reference application or patent either is shown to be commonly owned with the examined application, or claims an invention made as a result of activities undertaken within the scope of a joint research agreement. See MPEP § 717.02 for applications subject to examination under the first inventor to file provisions of the AIA as explained in MPEP § 2159. See MPEP § 2146 *et seq.* for applications not subject to examination under the first inventor to file provisions of the AIA. A terminal disclaimer must be signed in compliance with 37 CFR 1.321(b).

The USPTO Internet website contains terminal disclaimer forms which may be used. Please visit www.uspto.gov/patent/patents-forms. The filing date of the application in which the form is filed

determines what form (e.g., PTO/SB/25, PTO/SB/26, PTO/AIA/25, or PTO/AIA/26) should be used. A web-based eTerminal Disclaimer may be filled out completely online using web-screens. An eTerminal Disclaimer that meets all requirements is auto-processed and approved immediately upon submission. For more information about eTerminal Disclaimers, refer to www.uspto.gov/patents/process/file/efs/guidance/eTD-info-I.jsp.

Claim 20 is rejected on the ground of nonstatutory double patenting as being unpatentable over claim 1 of U.S. Patent No. 11,003,191 in view of Meniere (US 7,362,351).

With regards to claim 20, claim 1 of Patent '191 is very similar to claim 20 of present Application '388, wherein claim 1 of Patent '191 discloses "...at least one camera positioned on or in the body for capturing an image of at least a first portion of the submerged surface, ...a controller (i) positioned on or in the body, (ii) in electronic communication with the at least one camera, and (iii) configured to generate, in response to the captured image, at least one control signal to cause movement of the body within the swimming pool to, or away from, the first portion of the submerged surface".

Claim 1 of Patent '191 does not disclose "...at least one camera for capturing an image of at least a first object within the swimming pool, ...a controller (i) in electronic communication with the at least one camera and (ii) configured to generate, in response to the captured image, at least one control signal to cause movement of the body within the swimming pool to, or away from, the first object". However, Meniere teaches at least one camera for capturing an image of at least a first object within the swimming pool (col.14, ln.12-19, Meniere discloses that an object was detected on the underwater surface of a swimming pool, and col.14, ln.22-25, Meniere discloses that an object was detected by camera 606). Since Meniere discloses a camera for capturing an image of a detected object within the swimming pool, and claim 1 of Patent '191 discloses "a controller (i) positioned on or in the body, (ii) in electronic communication with the at least one camera, and (iii) configured to generate, in response to the captured image, at least one control signal to cause movement of the body within the swimming pool to, or away from, the first portion of the submerged surface", therefore, it would have been obvious to one of ordinary skill in the art to combine the teachings of claim 1 of Patent '191 and Meniere together as a whole for ascertaining the limitation of "a controller (i) in electronic communication with the at least one camera and (ii) configured to generate, in response to the captured image, at least one control signal to cause

movement of the body within the swimming pool to, or away from, the first object" in order to effectively discern moving objects from stationary objects within the underwater environment for alerting one of detected objects (Meniere's col.1, ln 63 to col.2, ln.4). Doing so would permit accurate detection of objects in a swimming pool for cleaning debris.

Claim 20 is rejected on the ground of nonstatutory double patenting as being unpatentable over claim 1 of U.S. Patent No. 9,995,051 in view of Meniere (US 7,362,351).

With regards to claim 20, claim 1 of Patent '051 is very similar to claim 20 of present Application '388, wherein claim 1 of Patent '051 discloses "...at least one camera to capture imagery of the pool surface, ...a controller, in electronic communication with the at least one camera, to determine a cleanliness characteristic of the pool surface on which the cleaner has passed based on the camera imagery and generate a control signal to direct movement of the cleaner based on the cleanliness characteristic of the pool surface, wherein the control signal directs movement of the cleaner to reclean a portion of the pool surface where the cleanliness characteristic fails to satisfy a predefined threshold".

Claim 1 of Patent '051 does not disclose "...at least one camera for capturing an image of at least a first object within the swimming pool, ...a controller (i) in electronic communication with the at least one camera and (ii) configured to generate, in response to the captured image, at least one control signal to cause movement of the body within the swimming pool to, or away from, the first object". However, Meniere teaches at least one camera for capturing an image of at least a first object within the swimming pool (col.14, ln.12-19, Meniere discloses that an object was detected on the underwater surface of a swimming pool, and col.14, ln.22-25, Meniere discloses that an object was detected by camera 606). Since Meniere discloses at least one camera for capturing an image of at least a first object within the swimming pool, and claim 1 of Patent '051 discloses "a controller, in electronic communication with the at least one camera, to determine a cleanliness characteristic of the pool surface on which the cleaner has passed based on the camera imagery and generate a control signal to direct movement of the cleaner based on the cleanliness characteristic of the pool surface, wherein the control signal directs movement of the cleaner to reclean a portion of the pool surface where the cleanliness characteristic fails to satisfy a predefined threshold", therefore, it would have been obvious to one of ordinary skill in the art to combine

the teachings of claim 1 of Patent '051 and Meniere together as a whole for ascertaining the limitation of "a controller (i) in electronic communication with the at least one camera and (ii) configured to generate, in response to the captured image, at least one control signal to cause movement of the body within the swimming pool to, or away from, the first object" in order to effectively discern moving objects from stationary objects within the underwater environment for alerting one of detected objects (Meniere's col.1, ln 63 to col.2, ln.4). Doing so would permit accurate detection of objects in a swimming pool for cleaning debris.

Claim 20 is rejected on the ground of nonstatutory double patenting as being unpatentable over claim 1 of U.S. Patent No. 11,262,766 in view of Meniere (US 7,362,351).

With regards to claim 20, claim 1 of Patent '766 is very similar to claim 20 of present Application '388, wherein claim 1 of Patent '766 discloses "...at least one camera mounted directly or indirectly to the body for capturing an image of at least a first portion of the submerged surface, ...a controller (i) positioned on or in the body, (ii) in electronic communication with the at least one camera, and (iii) configured to generate, in response to the captured image, at least one control signal to cause movement of the body within the swimming pool to, or away from, the first portion of the submerged surface".

Claim 1 of Patent '766 does not disclose "...at least one camera for capturing an image of at least a first object within the swimming pool, ...a controller (i) in electronic communication with the at least one camera and (ii) configured to generate, in response to the captured image, at least one control signal to cause movement of the body within the swimming pool to, or away from, the first object". However, Meniere teaches at least one camera for capturing an image of at least a first object within the swimming pool (col.14, ln.12-19, Meniere discloses that an object was detected on the underwater surface of a swimming pool, and col.14, ln.22-25, Meniere discloses that an object was detected by camera 606). Since Meniere discloses at least one camera for capturing an image of at least a first object within the swimming pool, and claim 1 of Patent '766 discloses "a controller (i) positioned on or in the body, (ii) in electronic communication with the at least one camera, and (iii) configured to generate, in response to the captured image, at least one control signal to cause movement of the body within the swimming pool to, or away from, the first portion of the submerged surface", therefore, it would have been obvious to one of

ordinary skill in the art to combine the teachings of claim 1 of Patent '766 and Meniere together as a whole for ascertaining the limitation of "a controller (i) in electronic communication with the at least one camera and (ii) configured to generate, in response to the captured image, at least one control signal to cause movement of the body within the swimming pool to, or away from, the first object" in order to effectively discern moving objects from stationary objects within the underwater environment for alerting one of detected objects (Meniere's col.1, ln 63 to col.2, ln.4). Doing so would permit accurate detection of objects in a swimming pool for cleaning debris.

Peruse the tables below:

Current Application 17/572,388	US Patent Number 11,003,191	US Patent Number 9,995,051
Claim 20. A self-propelled pool cleaning system for cleaning debris from a submerged surface of a swimming pool, comprising: a. a vehicle body; b. means for moving the vehicle body within the swimming pool; c. a filter configured to retain debris collected from the submerged surface; d. at least one camera for capturing an image of at least a first object within the swimming pool; and e. a controller (i) in electronic communication with the at least one camera and (ii) configured to generate, in response to the captured image, at least one control signal to cause movement of the body within the swimming pool to, or away from, the first object.	Claim 1. A self-propelled pool cleaner for cleaning debris from a submerged surface of a swimming pool, comprising: a. a vehicle body; b. means for moving the vehicle body within the swimming pool; c. a filter configured to retain debris collected from the submerged surface; d. at least one camera positioned on or in the body for capturing an image of at least a first portion of the submerged surface; and e. a controller (i) positioned on or in the body, (ii) in electronic communication with the at least one camera, and (iii) configured to generate, in response to the captured image, at least one control signal to cause movement of the body within the swimming pool to, or away from, the first portion of the submerged surface.	Claim 1. A pool cleaning system for cleaning debris from a submerged surface of a swimming pool comprising: a self-propelled pool cleaner having rotatably-mounted supports for supporting and guiding the cleaner on the pool surface; a filter configured to retain the debris collected from the submerged surface of the swimming pool; an electric motor for enabling the rotation of the rotatably-mounted supports on the pool surface; at least one camera to capture imagery of the pool surface; a controller, in electronic communication with the at least one camera, to determine a cleanliness characteristic of the pool surface on which the cleaner has passed based on the camera imagery and generate a control signal to direct movement of the cleaner based on the cleanliness characteristic of the pool surface, wherein the control signal directs movement of the cleaner to reclean a portion of the pool surface where the cleanliness characteristic fails to satisfy a predefined threshold.

Current Application 17/572,388	US Patent Number 11,262,766
Claim 20. A self-propelled pool cleaning system for cleaning debris from a submerged surface of a swimming pool, comprising: a. a vehicle body; b. means for moving the vehicle body within the swimming pool; c. a filter configured to retain debris collected from the submerged surface; d. at least one camera for capturing an image of at least a first object within the swimming pool; and e. a controller (i) in electronic communication with the at least one camera and (ii) configured to generate, in response to the captured image, at least one control signal to cause movement of the body within the swimming pool to, or away from, the first object.	Claim 1. A self-propelled pool cleaner for cleaning debris from a submerged surface of a swimming pool, comprising: a. a vehicle body; b. means for moving the vehicle body within the swimming pool; c. a filter configured to retain debris collected from the submerged surface; d. at least one camera mounted directly or indirectly to the body for capturing an image of at least a first portion of the submerged surface; and e. a controller (i) positioned on or in the body, (ii) in electronic communication with the at least one camera, and (iii) configured to generate, in response to the captured image, at least one control signal to cause movement of the body within the swimming pool to, or away from, the first portion of the submerged surface.

Contact Information

Any inquiry concerning this communication or earlier communications from the examiner should be directed to ALLEN C WONG whose telephone number is (571)272-7341. The examiner can normally be reached on Flex Monday-Thursday 9:30am-7:30pm.

Examiner interviews are available via telephone, in-person, and video conferencing using a USPTO supplied web-based collaboration tool. To schedule an interview, applicant is encouraged to use the USPTO Automated Interview Request (AIR) at http://www.uspto.gov/interviewpractice.

If attempts to reach the examiner by telephone are unsuccessful, the examiner's supervisor, Sath V Perungavoor can be reached on 571-272-7455. The fax phone number for the organization where this application or proceeding is assigned is 571-273-8300.

Information regarding the status of an application may be obtained from the Patent Application Information Retrieval (PAIR) system. Status information for published applications may be obtained from either Private PAIR or Public PAIR. Status information for unpublished applications is available through Private PAIR only. For more information about the PAIR system, see http://pair-direct.uspto.gov. Should you have questions on access to the Private PAIR system, contact the Electronic Business Center (EBC) at 866-217-9197 (toll-free). If you would like assistance from a USPTO Customer Service Representative

or access to the automated information system, call 800-786-9199 (IN USA OR CANADA) or 571-272-1000.

/ALLEN C WONG/
Primary Examiner, Art Unit 2488

PTO/SB/06 (09-11)
Approved for use through 1/31/2014. OMB 0651-0032
U.S. Patent and Trademark Office; U.S. DEPARTMENT OF COMMERCE
Under the Paperwork Reduction Act of 1995, no persons are required to respond to a collection of information unless it displays a valid OMB control number.

PATENT APPLICATION FEE DETERMINATION RECORD Substitute for Form PTO-875	Application or Docket Number 17/572,388	Filing Date 01/10/2022	☐ To be Mailed

ENTITY: ☑ LARGE ☐ SMALL ☐ MICRO

APPLICATION AS FILED - PART I

FOR	(Column 1) NUMBER FILED	(Column 2) NUMBER EXTRA		RATE ($)	FEE ($)
☐ BASIC FEE (37 CFR 1.16(a), (b), or (c))	N/A	N/A		N/A	
☐ SEARCH FEE (37 CFR 1.16(k), (i), or (m))	N/A	N/A		N/A	
☐ EXAMINATION FEE (37 CFR 1.16(o), (p), or (q))	N/A	N/A		N/A	
TOTAL CLAIMS (37 CFR 1.16(i))	minus 20 =	*		x $100 =	
INDEPENDENT CLAIMS (37 CFR 1.16(h))	minus 3 =	*		x $480 =	
☐ APPLICATION SIZE FEE (37 CFR 1.16(s))	If the specification and drawings exceed 100 sheets of paper, the application size fee due is $310 ($155 for small entity) for each additional 50 sheets or fraction thereof. See 35 U.S.C. 41(a)(1)(G) and 37 CFR 1.16(s).				
☐ MULTIPLE DEPENDENT CLAIM PRESENT (37 CFR 1.16(j))					
* If the difference in column 1 is less than zero, enter "0" in column 2.				TOTAL	

APPLICATION AS AMENDED - PART II

AMENDMENT		(Column 1) CLAIMS REMAINING AFTER AMENDMENT		(Column 2) HIGHEST NUMBER PREVIOUSLY PAID FOR	(Column 3) PRESENT EXTRA		RATE ($)	ADDITIONAL FEE ($)
	06/29/2023							
	Total (37 CFR 1.16(i))	* 18	Minus	** 20	= 0		x $100 =	0
	Independent (37 CFR 1.16(h))	* 2	Minus	*** 3	= 0		x $480 =	0
	☐ Application Size Fee (37 CFR 1.16(s))							
	☐ FIRST PRESENTATION OF MULTIPLE DEPENDENT CLAIM (37 CFR 1.16(j))							
							TOTAL ADD'L FEE	0

AMENDMENT		(Column 1) CLAIMS REMAINING AFTER AMENDMENT		(Column 2) HIGHEST NUMBER PREVIOUSLY PAID FOR	(Column 3) PRESENT EXTRA		RATE ($)	ADDITIONAL FEE ($)
	Total (37 CFR 1.16(i))	*	Minus	**	=		x $0 =	
	Independent (37 CFR 1.16(h))	*	Minus	***	=		x $0 =	
	☐ Application Size Fee (37 CFR 1.16(s))							
	☐ FIRST PRESENTATION OF MULTIPLE DEPENDENT CLAIM (37 CFR 1.16(j))							
							TOTAL ADD'L FEE	

* If the entry in column 1 is less than the entry in column 2, write "0" in column 3.	LIE
** If the "Highest Number Previously Paid For" IN THIS SPACE is less than 20, enter "20".	/TAMMY D MCBETH/
*** If the "Highest Number Previously Paid For" IN THIS SPACE is less than 3, enter "3".	
The "Highest Number Previously Paid For" (Total or Independent) is the highest number found in the appropriate box in column 1.	

This collection of information is required by 37 CFR 1.16. The information is required to obtain or retain a benefit by the public which is to file (and by the USPTO to process) an application. Confidentiality is governed by 35 U.S.C. 122 and 37 CFR 1.14. This collection is estimated to take 12 minutes to complete, including gathering, preparing, and submitting the completed application form to the USPTO. Time will vary depending upon the individual case. Any comments on the amount of time you require to complete this form and/or suggestions for reducing this burden, should be sent to the Chief Information Officer, U.S. Patent and Trademark Office, U.S. Department of Commerce, P.O. Box 1450, Alexandria, VA 22313-1450. DO NOT SEND FEES OR COMPLETED FORMS TO THIS ADDRESS. **SEND TO: Commissioner for Patents, P.O. Box 1450, Alexandria, VA 22313-1450.**

If you need assistance in completing the form, call 1-800-PTO-9199 and select option 2.

Doc Code: DIST.E.FILE **Document Description: Electronic Terminal Disclaimer - Filed**	PTO/SB/26 U.S. Patent and Trademark Office Department of Commerce

Electronic Petition Request	**TERMINAL DISCLAIMER TO OBVIATE A DOUBLE PATENTING REJECTION OVER A "PRIOR" PATENT**
Application Number	17572388
Filing Date	10-Jan-2022
First Named Inventor	Kameshwar Durvasula
Attorney Docket Number	105650-1292756
Title of Invention	POOL CLEANING SYSTEM AND METHOD TO AUTOMATICALLY CLEAN SURFACES OF A POOL USING IMAGES FROM A CAMERA

☒ Filing of terminal disclaimer does not obviate requirement for response under 37 CFR 1.111 to outstanding Office Action

☒ This electronic Terminal Disclaimer is not being used for a Joint Research Agreement.

Owner	Percent Interest
ZODIAC POOL SYSTEMS LLC	100%

The owner(s) with percent interest listed above in the instant application hereby disclaims, except as provided below, the terminal part of the statutory term of any patent granted on the instant application which would extend beyond the expiration date of the full statutory term of prior patent number(s)

11262766

11003191

9995051

as the term of said prior patent is presently shortened by any terminal disclaimer. The owner hereby agrees that any patent so granted on the instant application shall be enforceable only for and during such period that it and the prior patent are commonly owned. This agreement runs with any patent granted on the instant application and is binding upon the grantee, its successors or assigns.

In making the above disclaimer, the owner does not disclaim the terminal part of the term of any patent granted on the instant application that would extend to the expiration date of the full statutory term of the prior patent, "as the term of said prior patent is presently shortened by any terminal disclaimer," in the event that said prior patent later:
- expires for failure to pay a maintenance fee;
- is held unenforceable;
- is found invalid by a court of competent jurisdiction;
- is statutorily disclaimed in whole or terminally disclaimed under 37 CFR 1.321;
- has all claims canceled by a reexamination certificate;
- is reissued; or
- is in any manner terminated prior to the expiration of its full statutory term as presently shortened by any terminal disclaimer.

- [x] Terminal disclaimer fee under 37 CFR 1.20(d) is included with Electronic Terminal Disclaimer request.
- [ ] I certify, in accordance with 37 CFR 1.4(d)(4), that the terminal disclaimer fee under 37 CFR 1.20(d) required for this terminal disclaimer has already been paid in the above-identified application.

Applicant claims the following fee status:

- [ ] Small Entity
- [ ] Micro Entity
- [x] Regular Undiscounted

I hereby declare that all statements made herein of my own knowledge are true and that all statements made on information and belief are believed to be true; and further that these statements were made with the knowledge that willful false statements and the like so made are punishable by fine or imprisonment, or both, under Section 1001 of Title 18 of the United States Code and that such willful false statements may jeopardize the validity of the application or any patent issued thereon.

THIS PORTION MUST BE COMPLETED BY THE SIGNATORY OR SIGNATORIES

I certify, in accordance with 37 CFR 1.4(d)(4) that I am:

- [x] An attorney or agent registered to practice before the Patent and Trademark Office who is of record in this application

  Registration Number 70195

- [ ] A sole inventor
- [ ] A joint inventor; I certify that I am authorized to sign this submission on behalf of all of the inventors as evidenced by the power of attorney in the application
- [ ] A joint inventor; all of whom are signing this request

Signature	/Anthony L. Guebert/
Name	Anthony L. Guebert

*Statement under 37 CFR 3.73(b) is required if terminal disclaimer is signed by the assignee (owner).
Form PTO/SB/96 may be used for making this certification. See MPEP § 324.

Electronic Patent Application Fee Transmittal

Application Number:	17572388
Filing Date:	10-Jan-2022
Title of Invention:	POOL CLEANING SYSTEM AND METHOD TO AUTOMATICALLY CLEAN SURFACES OF A POOL USING IMAGES FROM A CAMERA
First Named Inventor/Applicant Name:	Kameshwar Durvasula
Filer:	Anthony Lawrence Guebert/Sandee Harvey-McCullough
Attorney Docket Number:	105650-1292756

Filed as Large Entity

Filing Fees for Utility under 35 USC 111(a)

Description	Fee Code	Quantity	Amount	Sub-Total in USD($)
Basic Filing:				
STATUTORY OR TERMINAL DISCLAIMER	1814	1	170	170
Pages:				
Claims:				
Miscellaneous-Filing:				
Petition:				
Patent-Appeals-and-Interference:				
Post-Allowance-and-Post-Issuance:				

Description	Fee Code	Quantity	Amount	Sub-Total in USD($)
Extension-of-Time:				
Miscellaneous:				
			Total in USD ($)	**170**

Doc Code: DISQ.E.FILE
Document Description: Electronic Terminal Disclaimer – Approved

Application No.: 17572388

Filing Date: 10-Jan-2022

Applicant/Patent under Reexamination: Durvasula

Electronic Terminal Disclaimer filed on June 29, 2023

☒ APPROVED

This patent is subject to a terminal disclaimer

☐ DISAPPROVED

Approved/Disapproved by: Electronic Terminal Disclaimer automatically approved by EFS-Web

U.S. Patent and Trademark Office

Electronic Acknowledgement Receipt

EFS ID:	48225421
Application Number:	17572388
International Application Number:	
Confirmation Number:	1072
Title of Invention:	POOL CLEANING SYSTEM AND METHOD TO AUTOMATICALLY CLEAN SURFACES OF A POOL USING IMAGES FROM A CAMERA
First Named Inventor/Applicant Name:	Kameshwar Durvasula
Customer Number:	23370
Filer:	Anthony Lawrence Guebert/Sandee Harvey-McCullough
Filer Authorized By:	Anthony Lawrence Guebert
Attorney Docket Number:	105650-1292756
Receipt Date:	29-JUN-2023
Filing Date:	10-JAN-2022
Time Stamp:	15:17:44
Application Type:	Utility under 35 USC 111(a)

Payment information:

Submitted with Payment	yes
Payment Type	CARD
Payment was successfully received in RAM	$170
RAM confirmation Number	E20236SF17418409
Deposit Account	201430
Authorized User	Sandee Harvey-McCullough

The Director of the USPTO is hereby authorized to charge indicated fees and credit any overpayment as follows:

37 CFR 1.16 (National application filing, search, and examination fees)

37 CFR 1.17 (Patent application and reexamination processing fees)

37 CFR 1.19 (Document supply fees)

37 CFR 1.20 (Post Issuance fees)

37 CFR 1.21 (Miscellaneous fees and charges)

File Listing:

Document Number	Document Description	File Name	File Size(Bytes)/ Message Digest	Multi Part /.zip	Pages (if appl.)
1	Terminal Disclaimer-Filed (Electronic)	eTerminal-Disclaimer.pdf	41672 96cf1a2cdaf76e94d46cdc2ecb71392f6d09f695	no	2
Warnings:					
Information:					
2	Fee Worksheet (SB06)	fee-info.pdf	38242 673e6a127aed77aa1bf181688a69d5863ad02084	no	2
Warnings:					
Information:					
		Total Files Size (in bytes):	79914		

This Acknowledgement Receipt evidences receipt on the noted date by the USPTO of the indicated documents, characterized by the applicant, and including page counts, where applicable. It serves as evidence of receipt similar to a Post Card, as described in MPEP 503.

New Applications Under 35 U.S.C. 111
If a new application is being filed and the application includes the necessary components for a filing date (see 37 CFR 1.53(b)-(d) and MPEP 506), a Filing Receipt (37 CFR 1.54) will be issued in due course and the date shown on this Acknowledgement Receipt will establish the filing date of the application.
National Stage of an International Application under 35 U.S.C. 371
If a timely submission to enter the national stage of an international application is compliant with the conditions of 35 U.S.C. 371 and other applicable requirements a Form PCT/DO/EO/903 indicating acceptance of the application as a national stage submission under 35 U.S.C. 371 will be issued in addition to the Filing Receipt, in due course.
New International Application Filed with the USPTO as a Receiving Office
If a new international application is being filed and the international application includes the necessary components for an international filing date (see PCT Article 11 and MPEP 1810), a Notification of the International Application Number and of the International Filing Date (Form PCT/RO/105) will be issued in due course, subject to prescriptions concerning national security, and the date shown on this Acknowledgement Receipt will establish the international filing date of the application.

I hereby certify that this correspondence is being filed via EFS-Web with the United States Patent and Trademark Office on 2023-06-29.

KILPATRICK TOWNSEND & STOCKTON LLP

By: Sandee Harvey /Sandee Harvey/

PATENT
Attorney Docket No.: 105650-1292756

IN THE UNITED STATES PATENT AND TRADEMARK OFFICE

In re Application of:

Kameshwar Durvasula et al.

Application No.: 17/572,388

Filed: January 10, 2022

For: POOL CLEANING SYSTEM AND METHOD TO AUTOMATICALLY CLEAN SURFACES OF A POOL USING IMAGES FROM A CAMERA

Customer No.: 23370

Confirmation No.: 1072

Examiner: Allen C. Wong

Art Unit: 2488

RESPONSE TO OFFICE ACTION

Commissioner for Patents
P.O. Box 1450
Alexandria, VA 22313-1450

Commissioner:

In response to the Non-Final Office Action mailed March 27, 2023, please enter the following amendments and consider the following remarks:

Amendments to the Claims are reflected in the Listing of Claims which begins on page 2 of this paper.

Remarks/Arguments begin on page 6 of this paper.

WYBOTICS EX1006
Wybotics v. Zodiac
Page 099

AMENDMENTS TO THE CLAIMS

This listing of claims will replace all prior versions, and listings of claims in the application.

Listing of Claims:

1.-19. (cancelled)

20. (previously presented) A self-propelled pool cleaning system for cleaning debris from a submerged surface of a swimming pool, comprising:

a. a vehicle body;

b. means for moving the vehicle body within the swimming pool;

c. a filter configured to retain debris collected from the submerged surface;

d. at least one camera for capturing an image of at least a first object within the swimming pool; and

e. a controller (i) in electronic communication with the at least one camera and (ii) configured to generate, in response to the captured image, at least one control signal to cause movement of the body within the swimming pool to, or away from, the first object.

21. (new) A pool system comprising:

at least one piece of equipment for a swimming pool or spa;

one or more cameras configured to capture video or images of at least a portion of a location including the swimming pool or spa; and

a controller in communication with the at least one piece of equipment and the one or more cameras, the controller configured to receive visual data from the one or more cameras and determine a control action for the at least one piece of equipment based on the received visual data.

22. (new) The pool system of claim 21, wherein the at least one piece of equipment comprises a cleaning device with one or more propulsion mechanisms, the cleaning device configured to

WYBOTICS EX1006
Wybotics v. Zodiac
Page 100

travel adjacent to submerged or water-containing surfaces of the swimming pool or spa and to perform a cleaning operation.

23. (new) The pool system of claim 21, wherein the one or more cameras are mounted external to the swimming pool or spa.

24. (new) The pool system of claim 21, wherein the one or more cameras are mounted on the at least one piece of equipment.

25. (new) The pool system of claim 21, wherein the one or more cameras are submergible or submerged within the swimming pool or spa.

26. (new) The pool system of claim 21, wherein the controller is configured to detect a characteristic of the location based on the visual data and control the piece of equipment based on the detected characteristic.

27. (new) The pool system of claim 21, wherein the characteristic comprises a cleanliness of a surface of the swimming pool, and wherein the controller is configured to control the piece of equipment based on the detected cleanliness being outside of a threshold.

28. (new) The pool system of claim 21, wherein the controller is configured to communicate with the at least one piece of equipment and the one or more cameras via a wireless connection.

29. (new) The pool system of claim 21, wherein the controller is further configured to present a graphical depiction on a remote device based on the received visual data as the control action.

30. (new) The pool system of claim 21, wherein the controller is remote from the camera.

31. (new) A method for monitoring a pool system, the method comprising:

receiving images of at least a portion of a location including the swimming pool or spa from one or more cameras;

determining a target area and detecting a characteristic of the target area based on the images; and

generating a control response based on the detected characteristic of the target area.

32. (new) The method of claim 31, wherein the target area comprises a portion of a surface of the swimming pool or spa, and wherein the characteristic comprises a cleanliness characteristic of the portion of the surface of the swimming pool or spa.

33. (new) The method of claim 31, wherein generating the control response comprises controlling an operation of a piece of equipment of the swimming pool or spa.

34. (new) The method of claim 31, wherein generating the control response comprises generating an alert on a remote device.

35. (new) The method of claim 31, wherein generating the control response comprises wirelessly communicating with a piece of equipment for the swimming pool or spa or a remote device.

36. (new) The method of claim 31, wherein generating the control response comprises prompting a user on a remote device, and wherein the method further comprises receiving a control input from the user on the remote device for controlling a piece of equipment of the swimming pool or spa.

37. (new) The method of claim 36, wherein prompting the user comprises providing recommended cleaning strategies for a cleaning device based on the detected characteristic of the target area.

38. (new) The method of claim 31, wherein generating the control response comprises controlling operation of a cleaning device configured to travel adjacent to submerged or water-containing surfaces of the swimming pool or spa and to perform a cleaning operation, wherein controlling operation of the cleaning device comprises one or more of controlling a path or route

WYBOTICS EX1006
Wybotics v. Zodiac
Page 102

of the cleaning device, an aggressiveness of cleaning chemicals deployed, an aggressiveness of mechanical cleaning, or a speed of the cleaning device.

39. (new) The method of claim 38, wherein the characteristic of the target area is a presence of a person at the swimming pool or spa, and wherein generating the control response is based on the detected presence of the person satisfying a predefined characteristic.

WYBOTICS EX1006
Wybotics v. Zodiac
Page 103

REMARKS/ARGUMENTS

Applicant respectfully requests entry of the above amendments and the following remarks in response to the Office Action mailed March 27, 2023 ("Office Action").

Upon entry of the present amendment, claims 20-39 will be pending in this application. New claims 21-39 have been added. No new matter is added. Based on the following remarks, Applicant respectfully requests reconsideration and allowance of the pending claims.

Double Patenting Rejections

Claim 20 is rejected on the ground of non-statutory double patenting for allegedly being unpatentable over claim 1 of U.S. Patent No. 11,003,191 in view of U.S. Patent No. 7,362,351 to Meniere et al. ("Meniere"). Claim 20 is rejected on the ground of non-statutory double patenting for allegedly being unpatentable over claim 1 of U.S. Patent No. 9,995,051 in view of Meniere. Claim 20 is rejected on the ground of non-statutory double patenting for allegedly being unpatentable over claim 1 of U.S. Patent No. 11,262,766 in view of Meniere.

Applicant has submitted a terminal disclaimer concurrent with this response and thus respectfully requests that the rejections be withdrawn.

New Claims

Claims 21-39 are new. Support for these claims may be found in the originally filed application and figures. Consideration of new claims 21-39 is respectfully requested.

WYBOTICS EX1006
Wybotics v. Zodiac
Page 104

CONCLUSION

In view of the foregoing, Applicant believes all claims now pending in this application are in condition for allowance. The issuance of a formal Notice of Allowance at an early date is respectfully requested.

Except for the issue fees payable under 37 C.F.R. § 1.18, the Director is authorized to charge any additional fees during pendency of this application, including any required extension of time fees, or credit any overpayment to Deposit Account Number 20-1430. This paragraph is intended to be a constructive petition for extension of time in accordance with 37 C.F.R. § 1.136(a)(3).

If the Examiner believes a telephone conference would expedite prosecution of this application, please contact the undersigned at (404) 815-6500 or AGuebert@kilpatricktownsend.com.

Respectfully submitted,

/Anthony Guebert/
Anthony Guebert

Reg. No. 70195

KILPATRICK TOWNSEND & STOCKTON LLP

US2008 21763333 1

WYBOTICS EX1006
Wybotics v. Zodiac
Page 105

PTO/AIA/22 (12-22)
Approved for use through 05/31/2024. OMB 0651-0031
U.S. Patent and Trademark Office; U.S. DEPARTMENT OF COMMERCE
Under the Paperwork Reduction Act of 1995, no persons are required to respond to a collection of information unless it displays a valid OMB control number.

PETITION FOR EXTENSION OF TIME UNDER 37 CFR 1.136(a)

Docket Number (Optional): 105650-1292756

Application Number: 17/572,388

Filed: 2022-01-10

For: POOL CLEANING SYSTEM AND METHOD TO AUTOMATICALLY CLEAN SURFACES OF A POOL USING IMAGES FROM A CAMERA

Art Unit: 2488

Examiner: Allen C. Wong

This is a request under the provisions of 37 CFR 1.136(a) to extend the period for filing a reply in the above-identified application.

The requested extension and fee are as follows (check time period desired and enter the appropriate fee below):

		Fee	Small Entity Fee	Micro Entity Fee	
☑	One month (37 CFR 1.17(a)(1))	$220	$88	$44	$ 220
☐	Two months (37 CFR 1.17(a)(2))	$640	$256	$128	$
☐	Three months (37 CFR 1.17(a)(3))	$1,480	$592	$296	$
☐	Four months (37 CFR 1.17(a)(4))	$2,320	$928	$464	$
☐	Five months (37 CFR 1.17(a)(5))	$3,160	$1,264	$632	$

☐ Applicant asserts small entity status. See 37 CFR 1.27.

☐ Applicant certifies micro entity status. See 37 CFR 1.29.
Form PTO/SB/15A or B or equivalent must either be enclosed or have been submitted previously.

☐ A check in the amount of the fee is enclosed.

☐ Payment by credit card. Form PTO-2038 is attached.

☐ The Director has already been authorized to charge fees in this application to a Deposit Account.

☑ The Director is hereby authorized to charge any fees which may be required, or credit any overpayment, to Deposit Account Number 201430.

☑ Payment made via USPTO's patent electronic filing system (Patent Center or EFS-Web).

WARNING: Information on this form may become public. Credit card information should not be included on this form. Provide credit card information and authorization on PTO-2038.

I am the

☐ applicant.

☑ attorney or agent of record. Registration number 70195.

☐ attorney or agent acting under 37 CFR 1.34. Registration number _____.

/Anthony L. Guebert/
Signature

2023-06-29
Date

Anthony L. Guebert
Typed or printed name

404-815-6015
Telephone Number

NOTE: This form must be signed in accordance with 37 CFR 1.33. See 37 CFR 1.4 for signature requirements and certifications. Submit multiple forms if more than one signature is required, see below*.

☐ * Total of _____ forms are submitted.

A Federal agency may not conduct or sponsor, and a person is not required to respond to, nor shall a person be subject to a penalty for failure to comply with an information collection subject to the requirements of the Paperwork Reduction Act of 1995, unless the information collection has a currently valid OMB Control Number. The OMB Control Number for this information collection is 0651-0031. Public burden for this form is estimated to average 6 minutes per response, including the time for reviewing instructions, searching existing data sources, gathering and maintaining the data needed, and completing and reviewing the information collection. Send comments regarding this burden estimate or any other aspect of this information collection, including suggestions for reducing this burden to the Chief Administrative Officer, United States Patent and Trademark Office, P.O. Box 1450, Alexandria, VA 22313-1450 or email InformationCollection@uspto.gov. **DO NOT SEND FEES OR COMPLETED FORMS TO THIS ADDRESS.** If filing this completed form by mail, send to: **Commissioner for Patents, P.O. Box 1450, Alexandria, VA 22313-1450.**

If you need assistance in completing the form, call 1-800-PTO-9199 and select option 2.

Privacy Act Statement

The Privacy Act of 1974 (P.L. 93-579) requires that you be given certain information in connection with your submission of the attached form related to a patent application or patent. The United States Patent and Trademark Office (USPTO) collects the information in this record under authority of 35 U.S.C. 2. The USPTO's system of records is used to manage all applicant and owner information including name, citizenship, residence, post office address, and other information with respect to inventors and their legal representatives pertaining to the applicant's/owner's activities in connection with the invention for which a patent is sought or has been granted. The applicable Privacy Act System of Records Notice for the information collected in this form is COMMERCE/PAT-TM-7 Patent Application Files, available in the Federal Register at 78 FR 19243 (March 29, 2013). https://www.govinfo.gov/content/pkg/FR-2013-03-29/pdf/2013-07341.pdf

Routine uses of the information in this record may include disclosure to: 1) law enforcement, in the event that the system of records indicates a violation or potential violation of law; 2) a Federal, state, local, or international agency, in response to its request; 3) a contractor of the USPTO having need for the information in order to perform a contract; 4) the Department of Justice for determination of whether the Freedom of Information Act (FOIA) requires disclosure of the record; 5) a Member of Congress submitting a request involving an individual to whom the record pertains, when the individual has requested the Member's assistance with respect to the subject matter of the record; 6) a court, magistrate, or administrative tribunal, in the course of presenting evidence, including disclosures to opposing counsel in the course of settlement negotiations; 7) the Administrator, General Services Administration (GSA), or their designee, during an inspection of records conducted by GSA under authority of 44 U.S.C. 2904 and 2906, in accordance with the GSA regulations and any other relevant (i.e., GSA or Commerce) directive, where such disclosure shall not be used to make determinations about individuals; 8) another federal agency for purposes of National Security review (35 U.S.C. 181) and for review pursuant to the Atomic Energy Act (42 U.S.C. 218(c)); 9) the Office of Personnel Management (OPM) for personnel research purposes; and 9) the Office of Management and Budget (OMB) for legislative coordination and clearance.

If you do not furnish the information requested on this form, the USPTO may not be able to process and/or examine your submission, which may result in termination of proceedings, abandonment of the application, and/or expiration of the patent.

Additional Uses

Additional USPTO uses of the information in this record may include disclosure to: 1) the International Bureau of the World Intellectual Property Organization, if the record is related to an international application filed under the Patent Cooperation Treaty; 2) the public i) after publication of the application pursuant to 35 U.S.C. 122(b), ii) after issuance of a patent pursuant to 35 U.S.C. 151, iii) if the record was filed in an application which became abandoned or in which the proceedings were terminated and which application is referenced by either a published application, an application open to public inspections, or an issued patent, or iv) without publication of the application or patent under the specific circumstances provided for by 37 CFR 1.14(a)(1)(v)-(vii); and/or 3) the National Archives and Records Administration, for inspection of records.

Electronic Patent Application Fee Transmittal

Application Number:	17572388
Filing Date:	10-Jan-2022
Title of Invention:	POOL CLEANING SYSTEM AND METHOD TO AUTOMATICALLY CLEAN SURFACES OF A POOL USING IMAGES FROM A CAMERA
First Named Inventor/Applicant Name:	Kameshwar Durvasula
Filer:	Anthony Lawrence Guebert/Sandee Harvey-McCullough
Attorney Docket Number:	105650-1292756

Filed as Large Entity

Filing Fees for Utility under 35 USC 111(a)

Description	Fee Code	Quantity	Amount	Sub-Total in USD($)
Basic Filing:				
Pages:				
Claims:				
Miscellaneous-Filing:				
Petition:				
Patent-Appeals-and-Interference:				
Post-Allowance-and-Post-Issuance:				
Extension-of-Time:				

Description	Fee Code	Quantity	Amount	Sub-Total in USD($)
Extension - 1 month with $0 paid	1251	1	220	220
Miscellaneous:				
			Total in USD ($)	**220**

Electronic Acknowledgement Receipt

EFS ID:	48230247
Application Number:	17572388
International Application Number:	
Confirmation Number:	1072
Title of Invention:	POOL CLEANING SYSTEM AND METHOD TO AUTOMATICALLY CLEAN SURFACES OF A POOL USING IMAGES FROM A CAMERA
First Named Inventor/Applicant Name:	Kameshwar Durvasula
Customer Number:	23370
Filer:	Anthony Lawrence Guebert/Sandee Harvey-McCullough
Filer Authorized By:	Anthony Lawrence Guebert
Attorney Docket Number:	105650-1292756
Receipt Date:	29-JUN-2023
Filing Date:	10-JAN-2022
Time Stamp:	15:22:39
Application Type:	Utility under 35 USC 111(a)

Payment information:

Submitted with Payment	yes
Payment Type	CARD
Payment was successfully received in RAM	$220
RAM confirmation Number	E20236SF23479008
Deposit Account	201430
Authorized User	Sandee Harvey-McCullough

The Director of the USPTO is hereby authorized to charge indicated fees and credit any overpayment as follows:

37 CFR 1.16 (National application filing, search, and examination fees)

37 CFR 1.17 (Patent application and reexamination processing fees)

37 CFR 1.19 (Document supply fees)

37 CFR 1.20 (Post Issuance fees)

37 CFR 1.21 (Miscellaneous fees and charges)

File Listing:

Document Number	Document Description	File Name	File Size(Bytes)/ Message Digest	Multi Part /.zip	Pages (if appl.)
1		1292756_AMD.pdf	94328 55175e93dfa2a088c733eb22ab6759fc1e0de075	yes	7
	Multipart Description/PDF files in .zip description				
	Document Description		**Start**	**End**	
	Amendment/Request for Reconsideration-After Non-Final Rejection		1	1	
	Claims		2	5	
	Applicant Arguments/Remarks Made in an Amendment		6	7	
Warnings:					
Information:					
2	Extension of Time	1292756_EXT.pdf	657463 369284351336eb77a9700123865ab4fa0c425366	no	2
Warnings:					
Information:					
3	Fee Worksheet (SB06)	fee-info.pdf	38557 50e0c1ec6432ddf1ca0487ca247b7f5d0077fa02	no	2
Warnings:					
Information:					
		Total Files Size (in bytes):	790348		

This Acknowledgement Receipt evidences receipt on the noted date by the USPTO of the indicated documents, characterized by the applicant, and including page counts, where applicable. It serves as evidence of receipt similar to a Post Card, as described in MPEP 503.

New Applications Under 35 U.S.C. 111
If a new application is being filed and the application includes the necessary components for a filing date (see 37 CFR 1.53(b)-(d) and MPEP 506), a Filing Receipt (37 CFR 1.54) will be issued in due course and the date shown on this Acknowledgement Receipt will establish the filing date of the application.
National Stage of an International Application under 35 U.S.C. 371
If a timely submission to enter the national stage of an international application is compliant with the conditions of 35 U.S.C. 371 and other applicable requirements a Form PCT/DO/EO/903 indicating acceptance of the application as a national stage submission under 35 U.S.C. 371 will be issued in addition to the Filing Receipt, in due course.
New International Application Filed with the USPTO as a Receiving Office
If a new international application is being filed and the international application includes the necessary components for an international filing date (see PCT Article 11 and MPEP 1810), a Notification of the International Application Number and of the International Filing Date (Form PCT/RO/105) will be issued in due course, subject to prescriptions concerning national security, and the date shown on this Acknowledgement Receipt will establish the international filing date of the application.

Notice of References Cited	Application/Control No. 17/572,388	Applicant(s)/Patent Under Reexamination Durvasula et al.	
	Examiner ALLEN C WONG	Art Unit 2488	Page 1 of 1

U.S. PATENT DOCUMENTS

*		Document Number Country Code-Number-Kind Code	Date MM-YYYY	Name	CPC Classification	US Classification
*	A	US-20110290707-A1	12-2011	PORAT; Joseph	G06Q20/3255	204/229.4
*	B	US-7362351-B2	04-2008	Meniere; Jerome	G06T7/20	348/135
*	C	US-20110049023-A1	03-2011	HUI; Wing-kin	E04H4/1654	210/138
	D					
	E					
	F					
	G					
	H					
	I					
	J					
	K					
	L					
	M					

FOREIGN PATENT DOCUMENTS

*		Document Number Country Code-Number-Kind Code	Date MM-YYYY	Country	Name	CPC Classification
	N					
	O					
	P					
	Q					
	R					
	S					
	T					

NON-PATENT DOCUMENTS

*		Include as applicable: Author, Title Date, Publisher, Edition or Volume, Pertinent Pages)
	U	
	V	
	W	
	X	

*A copy of this reference is not being furnished with this Office action. (See MPEP § 707.05(a).)
Dates in MM-YYYY format are publication dates. Classifications may be US or foreign.

Index of Claims	Application/Control No.	Applicant(s)/Patent Under Reexamination
	17/572,388	Durvasula et al.
	Examiner	**Art Unit**
	ALLEN C WONG	2488

✓	Rejected	-	Cancelled	N	Non-Elected	A	Appeal
=	Allowed	÷	Restricted	I	Interference	O	Objected

CLAIMS

☐ Claims renumbered in the same order as presented by applicant ☐ CPA ☑ T.D. ☐ R.1.47

CLAIM		DATE								
Final	Original	03/22/2023	08/30/2023							
	1	-	-							
	2	-	-							
	3	-	-							
	4	-	-							
	5	-	-							
	6	-	-							
	7	-	-							
	8	-	-							
	9	-	-							
	10	-	-							
	11	-	-							
	12	-	-							
	13	-	-							
	14	-	-							
	15	-	-							
	16	-	-							
	17	-	-							
	18	-	-							
	19	-	-							
1	20	✓	=							
2	21		=							
3	22		=							
4	23		=							
5	24		=							
6	25		=							
7	26		=							
8	27		=							
9	28		=							
10	29		=							
11	30		=							
12	31		=							
13	32		=							
14	33		=							
15	34		=							
16	35		=							
17	36		=							
18	37		=							
19	38		=							
20	39		=							

Search Notes	Application/Control No.	Applicant(s)/Patent Under Reexamination
	17/572,388	Durvasula et al.
	Examiner	**Art Unit**
	ALLEN C WONG	2488

CPC - Searched*		
Symbol	**Date**	**Examiner**
G05D 1/0246, 0016, 0033, 0038; G05D 2201/0203; H04N 23/66, 555 ; H04N 7/18; E04H 4/1654; G06T 7/90, 001; G06T 2207/10024	03/20/2023	AW
search updated	08/30/2023	AW

CPC Combination Sets - Searched*		
Symbol	**Date**	**Examiner**

US Classification - Searched*			
Class	**Subclass**	**Date**	**Examiner**
348	114	03/20/2023	AW
search	updated	08/30/2023	AW

* See search history printout included with this form or the SEARCH NOTES box below to determine the scope of the search.

Search Notes		
Search Notes	**Date**	**Examiner**
Inventor Names search	03/20/2023	AW
NPL search (eg. IP.com)	03/20/2023	AW
refs checked (US Patent Nos. 11262766, 11003191, 10739785, 10338599, 9995051, 9388595)	03/20/2023	AW
G05D 1/0246, 0016, 0033, 0038; G05D 2201/0203; H04N 23/66, 555 ; H04N 7/18; E04H 4/1654; G06T 7/90, 001; G06T 2207/10024 (see search history printout)	03/20/2023	AW
PE2E text search	03/20/2023	AW
search updated	08/30/2023	AW
NPL search (eg. IP.com)	08/30/2023	AW

/ALLEN C WONG/ Primary Examiner, Art Unit 2488	

WYBOTICS EX1005
Wybotics v. Zodiac
Page 115

Search Notes	Application/Control No.	Applicant(s)/Patent Under Reexamination
	17/572,388	Durvasula et al.
	Examiner	**Art Unit**
	ALLEN C WONG	2488

Interference Search			
US Class/CPC Symbol	**US Subclass/CPC Group**	**Date**	**Examiner**
348	114	08/30/2023	AW
G05D	1/0246, 0016, 0033, 0038; 2201/0203	08/30/2023	AW
H04N	23/66, 555; 7/18	08/30/2023	AW
E04H	4/1654	08/30/2023	AW
G06T	7/90, 001; 2207/10024	08/30/2023	AW

/ALLEN C WONG/ Primary Examiner, Art Unit 2488	

WYBOTICS EX1005
Wybotics v. Zodiac
Page 116

Issue Classification	Application/Control No.	Applicant(s)/Patent Under Reexamination
	17/572,388	Durvasula et al.
	Examiner	**Art Unit**
	ALLEN C WONG	2488

CPC						
Symbol					**Type**	**Version**
G05D	/	1	/	0246	F	2013-01-01
H04N	/	7	/	18	I	2013-01-01
H04N	/	23	/	66	I	2023-01-01
E04H	/	4	/	1654	I	2013-01-01
G05D	/	1	/	0016	I	2013-01-01
G05D	/	1	/	0033	I	2013-01-01
G05D	/	1	/	0038	I	2013-01-01
H04N	/	23	/	555	A	2023-01-01
G06T	/	7	/	90	A	2017-01-01
G05D	/	2201	/	0203	A	2013-01-01
G06T	/	7	/	001	A	2013-01-01
G06T	/	2207	/	10024	A	2013-01-01

CPC Combination Sets								
Symbol					**Type**	**Set**	**Ranking**	**Version**
	/		/					

NONE (Assistant Examiner)	(Date)	**Total Claims Allowed:** 20	
/ALLEN C WONG/ Primary Examiner, Art Unit 2488 (Primary Examiner)	30 August 2023 (Date)	O.G. Print Claim(s) 1	O.G. Print Figure 9

U.S. Patent and Trademark Office

Part of Paper No.: 20230830

WYBOTICS EX1006
Wybotics v. Zodiac
Page 117

Issue Classification	Application/Control No.	Applicant(s)/Patent Under Reexamination
	17/572,388	Durvasula et al.
	Examiner	**Art Unit**
	ALLEN C WONG	2488

INTERNATIONAL CLASSIFICATION				
CLAIMED				
G05D	/	1	/	02

NON-CLAIMED				
	/		/	

US ORIGINAL CLASSIFICATION	
CLASS	**SUBCLASS**

CROSS REFERENCES(S)						
CLASS	**SUBCLASS (ONE SUBCLASS PER BLOCK)**					

NONE (Assistant Examiner) (Date)		**Total Claims Allowed:** 20	
/ALLEN C WONG/ Primary Examiner, Art Unit 2488 (Primary Examiner)	30 August 2023 (Date)	O.G. Print Claim(s) 1	O.G. Print Figure 9

U.S. Patent and Trademark Office

Part of Paper No.: 20230830

WYBOTICS EX1006
Wybotics v. Zodiac
Page 118

Issue Classification	Application/Control No.	Applicant(s)/Patent Under Reexamination
	17/572,388	Durvasula et al.
	Examiner	**Art Unit**
	ALLEN C WONG	2488

☐ Claims renumbered in the same order as presented by applicant ☐ CPA ☑ T.D. ☐ R.1.47

CLAIMS

Final	Original	Final	Original	Final	Original	Final	Original	Final	Original	Final	Original	Final	Original	Final	Original
	1		10		19	9	28	18	37						
	2		11	1	20	10	29	19	38						
	3		12	2	21	11	30	20	39						
	4		13	3	22	12	31								
	5		14	4	23	13	32								
	6		15	5	24	14	33								
	7		16	6	25	15	34								
	8		17	7	26	16	35								
	9		18	8	27	17	36								

NONE (Assistant Examiner)	(Date)	**Total Claims Allowed:** 20	
/ALLEN C WONG/ Primary Examiner, Art Unit 2488 (Primary Examiner)	30 August 2023 (Date)	O.G. Print Claim(s) 1	O.G. Print Figure 9

U.S. Patent and Trademark Office

Part of Paper No.: 20230830

WYBOTICS EX1006
Wybotics v. Zodiac
Page 119

PE2E SEARCH - Search History (Prior Art)

Ref #	Hits	Search Query	DBs	Default Operator	Plurals	British Equivalents	Time Stamp
L1	45	durvasula-kameshwar.in.	(US-PGPUB; USPAT; EPO)	OR	ON	ON	2023/03/20 06:13 PM
L2	2	correa-william.in.	(US-PGPUB; USPAT; EPO)	OR	ON	ON	2023/03/20 06:13 PM
L3	25	correa-william-londono.in.	(US-PGPUB; USPAT; EPO)	OR	ON	ON	2023/03/20 06:13 PM
L4	402	(zodiac ADJ pool).as.	(US-PGPUB; USPAT; EPO)	OR	ON	ON	2023/03/20 06:13 PM
L5	133	348/114.ccls.	(US-PGPUB; USPAT; EPO)	OR	ON	ON	2023/03/20 06:14 PM
L6	6334	G05D1/0246.cpc.	(US-PGPUB; USPAT; EPO)	OR	ON	ON	2023/03/20 06:14 PM
L7	2879	G05D1/0016.cpc.	(US-PGPUB; USPAT; EPO)	OR	ON	ON	2023/03/20 06:14 PM
L8	850	G05D1/0033.cpc.	(US-PGPUB; USPAT; EPO)	OR	ON	ON	2023/03/20 06:15 PM
L9	2307	G05D1/0038.cpc.	(US-PGPUB; USPAT; EPO)	OR	ON	ON	2023/03/20 06:15 PM
L10	2814	G05D2201/0203.cpc.	(US-PGPUB; USPAT; EPO)	OR	ON	ON	2023/03/20 06:15 PM
L11	5513	H04N23/66.cpc.	(US-PGPUB; USPAT; EPO)	OR	ON	ON	2023/03/20 06:15 PM
L12	5157	H04N23/555.cpc.	(US-PGPUB; USPAT; EPO)	OR	ON	ON	2023/03/20 06:16 PM
L13	11671	H04N7/18.cpc.	(US-PGPUB; USPAT; EPO)	OR	ON	ON	2023/03/20 06:16 PM
L14	1248	E04H4/1654.cpc.	(US-PGPUB; USPAT; EPO)	OR	ON	ON	2023/03/20 06:16 PM
L15	9303	G06T7/90.cpc.	(US-PGPUB; USPAT; EPO)	OR	ON	ON	2023/03/20 06:17 PM
L16	7220	G06T7/001.cpc.	(US-PGPUB; USPAT; EPO)	OR	ON	ON	2023/03/20 06:17 PM
L17	18127	G06T2207/10024.cpc.	(US-PGPUB; USPAT; EPO)	OR	ON	ON	2023/03/20 06:17 PM
L18	712	6 AND 10	(US-PGPUB; USPAT; EPO)	OR	ON	ON	2023/03/20 06:22 PM
L19	235	6 AND 13	(US-PGPUB; USPAT; EPO)	OR	ON	ON	2023/03/20 06:22 PM
L20	24	("10338599"|"10739785"|"11003191"|"11262766"|"20020097322"|"20040025268"|"20040040581"|"20070094817"|"20100299016"|"20110049023"|"5205174"|"5435031"|"5507058"|"5613261"|"5886630"|"7123746"	(US-PGPUB; USPAT; EPO)	OR	ON	ON	2023/03/20 06:24 PM

		|"7362351"|"7398138"|"7993600"|"8007653"|"8043070"|"9388595"|"9995051").PN.					
L21	1287	((self-propell$4) OR auto OR automatic$4) near4 ((swim$4 near2 pool) OR pool) near2 (clean$3 OR re-clean$3 OR reclean$3)	(US-PGPUB; USPAT; EPO)	OR	ON	ON	2023/03/20 06:24 PM
L22	36	21 AND 1	(US-PGPUB; USPAT; EPO)	OR	ON	ON	2023/03/20 06:24 PM
L23	0	21 AND 2	(US-PGPUB; USPAT; EPO)	OR	ON	ON	2023/03/20 06:24 PM
L24	16	21 AND 3	(US-PGPUB; USPAT; EPO)	OR	ON	ON	2023/03/20 06:24 PM
L25	141	21 AND 4	(US-PGPUB; USPAT; EPO)	OR	ON	ON	2023/03/20 06:24 PM
L26	1	21 AND 5	(US-PGPUB; USPAT; EPO)	OR	ON	ON	2023/03/20 06:24 PM
L27	16	21 AND 6	(US-PGPUB; USPAT; EPO)	OR	ON	ON	2023/03/20 06:24 PM
L28	19	21 AND 7	(US-PGPUB; USPAT; EPO)	OR	ON	ON	2023/03/20 06:24 PM
L29	13	21 AND 8	(US-PGPUB; USPAT; EPO)	OR	ON	ON	2023/03/20 06:24 PM
L30	17	21 AND 9	(US-PGPUB; USPAT; EPO)	OR	ON	ON	2023/03/20 06:24 PM
L31	46	21 AND 10	(US-PGPUB; USPAT; EPO)	OR	ON	ON	2023/03/20 06:24 PM
L32	13	21 AND 11	(US-PGPUB; USPAT; EPO)	OR	ON	ON	2023/03/20 06:24 PM
L33	13	21 AND 12	(US-PGPUB; USPAT; EPO)	OR	ON	ON	2023/03/20 06:24 PM
L34	13	21 AND 13	(US-PGPUB; USPAT; EPO)	OR	ON	ON	2023/03/20 06:24 PM
L35	688	21 AND 14	(US-PGPUB; USPAT; EPO)	OR	ON	ON	2023/03/20 06:24 PM
L36	13	21 AND 15	(US-PGPUB; USPAT; EPO)	OR	ON	ON	2023/03/20 06:25 PM
L37	13	21 AND 16	(US-PGPUB; USPAT; EPO)	OR	ON	ON	2023/03/20 06:25 PM
L38	13	21 AND 17	(US-PGPUB; USPAT; EPO)	OR	ON	ON	2023/03/20 06:25 PM
L39	639	(camera$1 OR imager$1) WITH (CPU OR processor OR (control ADJ unit) OR controller) WITH motor WITH filter$3	(US-PGPUB; USPAT; EPO)	OR	ON	ON	2023/03/20 07:57 PM
L40	15	pool near2 clean$3	(US-PGPUB; USPAT;	OR	ON	ON	2023/03/20

		WITH camera$1 WITH motor$3	EPO)				07:57 PM
L41	119	pool near2 clean$3 WITH camera$1	(US-PGPUB; USPAT; EPO)	OR	ON	ON	2023/03/20 07:57 PM
L42	147	pool near2 clean$3 SAME camera$1	(US-PGPUB; USPAT; EPO)	OR	ON	ON	2023/03/20 07:58 PM
L43	1056	pool near2 clean$3 WITH (processor$1 OR control$4)	(US-PGPUB; USPAT; EPO)	OR	ON	ON	2023/03/20 07:58 PM
L44	41	43 AND 1	(US-PGPUB; USPAT; EPO)	OR	ON	ON	2023/03/20 07:59 PM
L45	0	43 AND 2	(US-PGPUB; USPAT; EPO)	OR	ON	ON	2023/03/20 07:59 PM
L46	18	43 AND 3	(US-PGPUB; USPAT; EPO)	OR	ON	ON	2023/03/20 07:59 PM
L47	57	43 AND 4	(US-PGPUB; USPAT; EPO)	OR	ON	ON	2023/03/20 07:59 PM
L48	1	43 AND 5	(US-PGPUB; USPAT; EPO)	OR	ON	ON	2023/03/20 07:59 PM
L49	588	43 AND (6 OR 7 OR 8 OR 9 OR 10 OR 11 OR 12 OR 13 OR 14 OR 15 OR 16 OR 17)	(US-PGPUB; USPAT; EPO)	OR	ON	ON	2023/03/20 07:59 PM
L50	94	(aqua ADJ products).as.	(US-PGPUB; USPAT; EPO)	OR	ON	ON	2023/03/20 08:04 PM
L51	2	(chemical near2 dispenser) WITH (camera$1 OR imager$1) WITH (CPU OR processor OR (control ADJ unit) OR controller) WITH motor WITH filter$3	(US-PGPUB; USPAT; EPO)	OR	ON	ON	2023/03/20 08:30 PM
L52	2	(chemical near2 dispenser) SAME (camera$1 OR imager$1) WITH (CPU OR processor OR (control ADJ unit) OR controller) WITH motor WITH filter$3	(US-PGPUB; USPAT; EPO)	OR	ON	ON	2023/03/20 08:30 PM
L53	11	(chemical near2 dispenser) AND (camera$1 OR imager$1) WITH (CPU OR processor OR (control ADJ unit) OR controller) WITH motor WITH filter$3	(US-PGPUB; USPAT; EPO)	OR	ON	ON	2023/03/20 08:30 PM
L54	0	(chemical near2 dispenser) WITH pool near2 clean$3 WITH camera$1	(US-PGPUB; USPAT; EPO)	OR	ON	ON	2023/03/20 08:32 PM

L55	0	(chemical near2 dispenser) SAME pool near2 clean$3 WITH camera$1	(US-PGPUB; USPAT; EPO)	OR	ON	ON	2023/03/20 08:32 PM
L56	17	(chemical near2 dispenser) AND pool near2 clean$3 WITH camera$1	(US-PGPUB; USPAT; EPO)	OR	ON	ON	2023/03/20 08:32 PM
L57	119	(chemical near2 dispenser) AND pool near2 clean$3	(US-PGPUB; USPAT; EPO)	OR	ON	ON	2023/03/20 08:32 PM
L58	34	pool near2 clean$3 SAME camera$1 SAME (control$4 OR processor$1) SAME filter$3	(US-PGPUB; USPAT; EPO)	OR	ON	ON	2023/03/20 08:32 PM
L59	73	pool near4 clean$3 WITH camera WITH (processor OR controller OR CPU)	(US-PGPUB; USPAT; EPO)	OR	ON	ON	2023/03/20 08:33 PM
L60	485	((swim$4 near2 pool) OR pool) near4 clean$3 WITH (processor OR controller OR CPU)	(US-PGPUB; USPAT; EPO)	OR	ON	ON	2023/03/20 08:33 PM
L61	102	((swim$4 near2 pool) OR pool) near4 clean$3 SAME camera SAME (processor OR controller OR CPU)	(US-PGPUB; USPAT; EPO)	OR	ON	ON	2023/03/20 08:33 PM
L62	547	pool near2 clean$3 near4 robot$1	(US-PGPUB; USPAT; EPO)	OR	ON	ON	2023/03/20 08:35 PM
L63	195	(pool near2 clean$3 near4 robot$1) AND camera$1	(US-PGPUB; USPAT; EPO)	OR	ON	ON	2023/03/20 08:35 PM
L64	72	(pool near2 clean$3 near4 robot$1) SAME camera$1	(US-PGPUB; USPAT; EPO)	OR	ON	ON	2023/03/20 08:35 PM
L65	11	62 AND 1	(US-PGPUB; USPAT; EPO)	OR	ON	ON	2023/03/20 08:36 PM
L66	0	62 AND 2	(US-PGPUB; USPAT; EPO)	OR	ON	ON	2023/03/20 08:36 PM
L67	3	62 AND 3	(US-PGPUB; USPAT; EPO)	OR	ON	ON	2023/03/20 08:36 PM
L68	40	62 AND 4	(US-PGPUB; USPAT; EPO)	OR	ON	ON	2023/03/20 08:36 PM
L69	0	62 AND 5	(US-PGPUB; USPAT; EPO)	OR	ON	ON	2023/03/20 08:36 PM
L70	364	62 AND (6 OR 7 OR 8 OR 9 OR 10 OR 11 OR 12 OR 13 OR 14 OR 15 OR 16 OR 17)	(US-PGPUB; USPAT; EPO)	OR	ON	ON	2023/03/20 08:36 PM
L71	66	(pool near2 clean$3 near4 robot$1) WITH	(US-PGPUB; USPAT; EPO)	OR	ON	ON	2023/03/20 10:50 PM

		camera$1					
L72	27	((swim$4 near2 pool) OR pool) near4 clean$3 AND camera SAME (processor OR controller OR CPU) WITH motor	(US-PGPUB; USPAT; EPO)	OR	ON	ON	2023/03/20 10:50 PM
L73	50	((swim$4 near2 pool) OR pool) near4 clean$3 AND camera SAME (processor OR controller OR CPU) SAME motor	(US-PGPUB; USPAT; EPO)	OR	ON	ON	2023/03/20 10:51 PM
L74	2	(reclean$3 OR re-clean$3) near8 ((swim$4 near2 pool$1) OR pool$1) WITH motor	(US-PGPUB; USPAT; EPO)	OR	ON	ON	2023/03/20 10:51 PM
L75	2	(reclean$3 OR re-clean$3) near8 ((swim$4 near2 pool$1) OR pool$1) SAME motor	(US-PGPUB; USPAT; EPO)	OR	ON	ON	2023/03/20 10:51 PM
L76	13	(reclean$3 OR re-clean$3) near8 ((swim$4 near2 pool$1) OR pool$1) SAME (processor$1 OR controller OR CPU)	(US-PGPUB; USPAT; EPO)	OR	ON	ON	2023/03/20 10:51 PM
L77	13	(reclean$3 OR re-clean$3) near8 ((swim$4 near2 pool$1) OR pool$1) WITH (processor$1 OR controller OR CPU)	(US-PGPUB; USPAT; EPO)	OR	ON	ON	2023/03/20 10:52 PM
L78	195	((swim$4 near2 pool) OR pool) near4 clean$3 AND camera SAME (processor OR controller OR CPU) SAME (display$3 OR monitor$4)	(US-PGPUB; USPAT; EPO)	OR	ON	ON	2023/03/20 10:52 PM
L79	14	((swim$4 near2 pool) OR pool) near4 clean$3 WITH (clean OR cleanness OR neatness OR cleanliness) near2 (threshold$1 OR value$1)	(US-PGPUB; USPAT; EPO)	OR	ON	ON	2023/03/20 10:52 PM
L80	14	((swim$4 near2 pool) OR pool) near4 clean$3 SAME (clean OR cleanness OR neatness OR cleanliness) near2 (threshold$1 OR	(US-PGPUB; USPAT; EPO)	OR	ON	ON	2023/03/20 10:52 PM

		value$1)					
L81	51	((swim$4 near2 pool) OR pool) near4 clean$3 AND (clean OR cleanness OR neatness OR cleanliness) near2 (threshold$1 OR value$1)	(US-PGPUB; USPAT; EPO)	OR	ON	ON	2023/03/20 10:52 PM
L82	66	(pool near2 clean$3 near4 robot$1) WITH camera$1	(US-PGPUB; USPAT; EPO)	OR	ON	ON	2023/03/20 10:53 PM
L83	16	78 AND 21	(US-PGPUB; USPAT; EPO)	OR	ON	ON	2023/03/20 10:55 PM
L84	0	82 AND 81	(US-PGPUB; USPAT; EPO)	OR	ON	ON	2023/03/20 10:57 PM
L85	0	82 AND 77	(US-PGPUB; USPAT; EPO)	OR	ON	ON	2023/03/20 10:57 PM
L86	13	21 AND 81	(US-PGPUB; USPAT; EPO)	OR	ON	ON	2023/03/20 10:59 PM
L87	51	((swim$4 near2 pool) OR pool) near4 clean$3 WITH (clean OR cleanness OR neatness OR cleanliness) near4 (characteristic$1 OR threshold$1 OR value$1 OR number$1)	(US-PGPUB; USPAT; EPO)	OR	ON	ON	2023/03/20 11:01 PM
L88	54	((swim$4 near2 pool) OR pool) near4 clean$3 SAME (clean OR cleanness OR neatness OR cleanliness) near4 (characteristic$1 OR threshold$1 OR value$1 OR number$1)	(US-PGPUB; USPAT; EPO)	OR	ON	ON	2023/03/20 11:02 PM
L89	18	((swim$4 near2 pool) OR pool) WITH (clean OR cleanness OR neatness OR cleanliness) near4 (characteristic$1 OR threshold$1 OR value$1 OR number$1) WITH (water OR underwater)	(US-PGPUB; USPAT; EPO)	OR	ON	ON	2023/03/20 11:02 PM
L90	26	(((swim$4 near2 pool) OR pool) OR water OR underwater) near4 (image OR picture) WITH compar$3 WITH threshold$1	(US-PGPUB; USPAT; EPO)	OR	ON	ON	2023/03/20 11:02 PM
L91	81	((swim$4 near2 pool) OR pool) WITH (clean OR cleanness OR	(US-PGPUB; USPAT; EPO)	OR	ON	ON	2023/03/20 11:02 PM

		neatness OR cleanliness) near4 (characteristic$1 OR threshold$1 OR value$1 OR number$1)					
L92	182	((swim$4 near2 pool) OR pool) near4 clean$3 AND (clean OR cleanness OR neatness OR cleanliness) near4 (characteristic$1 OR threshold$1 OR value$1 OR number$1)	(US-PGPUB; USPAT; EPO)	OR	ON	ON	2023/03/20 11:03 PM
L93	485	((swim$4 near2 pool) OR pool) near4 clean$3 WITH (processor OR controller OR CPU)	(US-PGPUB; USPAT; EPO)	OR	ON	ON	2023/03/20 11:03 PM
L94	40	93 AND 1	(US-PGPUB; USPAT; EPO)	OR	ON	ON	2023/03/20 11:08 PM
L95	0	93 AND 2	(US-PGPUB; USPAT; EPO)	OR	ON	ON	2023/03/20 11:08 PM
L96	15	93 AND 3	(US-PGPUB; USPAT; EPO)	OR	ON	ON	2023/03/20 11:08 PM
L97	21	93 AND 4	(US-PGPUB; USPAT; EPO)	OR	ON	ON	2023/03/20 11:08 PM
L98	1	93 AND 5	(US-PGPUB; USPAT; EPO)	OR	ON	ON	2023/03/20 11:08 PM
L99	345	93 AND (6 OR 7 OR 8 OR 9 OR 10 OR 11 OR 12 OR 13 OR 14 OR 15 OR 16 OR 17)	(US-PGPUB; USPAT; EPO)	OR	ON	ON	2023/03/20 11:08 PM
L100	21	43 AND 92	(US-PGPUB; USPAT; EPO)	OR	ON	ON	2023/03/20 11:09 PM
L102	13	43 AND 77	(US-PGPUB; USPAT; EPO)	OR	ON	ON	2023/03/20 11:09 PM
L103	12	(reclean$3 OR re-clean$3 OR (clean$3 near2 (again OR repetitive$3))) WITH pool$1 WITH (debris OR trash)	(US-PGPUB; USPAT; EPO)	OR	ON	ON	2023/03/21 03:26 PM
L104	0	swimming near4 pool$1 WITH (camera$1 OR imager$1 OR (image ADJ sensor$1)) SAME target$3 near4 (region OR area OR ROI OR (region near2 interest$)) SAME (response OR respond$3 OR react$3) WITH target$3 near4 (region OR area OR ROI OR (region near2 interest$))	(US-PGPUB; USPAT; EPO)	OR	ON	ON	2023/08/30 01:07 PM

L105	3	swimming near4 pool$1 WITH (camera$1 OR imager$1 OR (image ADJ sensor$1)) AND target$3 near4 (region OR area OR ROI OR (region near2 interest$)) AND (response OR respond$3 OR react$3) WITH target$3 near4 (region OR area OR ROI OR (region near2 interest$))	(US-PGPUB; USPAT; EPO)	OR	ON	ON	2023/08/30 01:07 PM
L106	27	swimming near4 pool$1 AND (camera$1 OR imager$1 OR (image ADJ sensor$1)) AND target$3 near4 (region OR area OR ROI OR (region near2 interest$)) AND (response OR respond$3 OR react$3) WITH target$3 near4 (region OR area OR ROI OR (region near2 interest$))	(US-PGPUB; USPAT; EPO)	OR	ON	ON	2023/08/30 01:07 PM
L107	46	durvasula-kameshwar.in.	(US-PGPUB; USPAT; EPO)	OR	ON	ON	2023/08/30 01:13 PM
L108	3	correa-william.in.	(US-PGPUB; USPAT; EPO)	OR	ON	ON	2023/08/30 01:14 PM
L109	25	correa-william-londono.in.	(US-PGPUB; USPAT; EPO)	OR	ON	ON	2023/08/30 01:14 PM
L110	418	(zodiac ADJ pool).as.	(US-PGPUB; USPAT; EPO)	OR	ON	ON	2023/08/30 01:14 PM
L111	137	348/114.ccls.	(US-PGPUB; USPAT; EPO)	OR	ON	ON	2023/08/30 01:14 PM
L112	6756	G05D1/0246.cpc.	(US-PGPUB; USPAT; EPO)	OR	ON	ON	2023/08/30 01:14 PM
L113	3065	G05D1/0016.cpc.	(US-PGPUB; USPAT; EPO)	OR	ON	ON	2023/08/30 01:14 PM
L114	889	G05D1/0033.cpc.	(US-PGPUB; USPAT; EPO)	OR	ON	ON	2023/08/30 01:14 PM
L115	2509	G05D1/0038.cpc.	(US-PGPUB; USPAT; EPO)	OR	ON	ON	2023/08/30 01:14 PM
L116	2967	G05D2201/0203.cpc.	(US-PGPUB; USPAT; EPO)	OR	ON	ON	2023/08/30 01:14 PM
L117	5681	H04N23/66.cpc.	(US-PGPUB; USPAT; EPO)	OR	ON	ON	2023/08/30 01:14 PM
L118	5326	H04N23/555.cpc.	(US-PGPUB; USPAT; EPO)	OR	ON	ON	2023/08/30 01:14 PM
L119	12014	H04N7/18.cpc.	(US-PGPUB; USPAT; EPO)	OR	ON	ON	2023/08/30 01:14 PM
L120	1289	E04H4/1654.cpc.	(US-PGPUB; USPAT;	OR	ON	ON	2023/08/30

			EPO)				01:14 PM
L121	9868	G06T7/90.cpc.	(US-PGPUB; USPAT; EPO)	OR	ON	ON	2023/08/30 01:14 PM
L122	7654	G06T7/001.cpc.	(US-PGPUB; USPAT; EPO)	OR	ON	ON	2023/08/30 01:14 PM
L123	19311	G06T2207/10024.cpc.	(US-PGPUB; USPAT; EPO)	OR	ON	ON	2023/08/30 01:14 PM
L124	756	6 AND 10	(US-PGPUB; USPAT; EPO)	OR	ON	ON	2023/08/30 01:14 PM
L125	241	6 AND 13	(US-PGPUB; USPAT; EPO)	OR	ON	ON	2023/08/30 01:14 PM
L126	24	("10338599"|"10739785"|"11003191"|"11262766"|"20020097322"|"20040025268"|"20040040581"|"20070094817"|"20100299016"|"20110049023"|"5205174"|"5435031"|"5507058"|"5613261"|"5886630"|"7123746"|"7362351"|"7398138"|"7993600"|"8007653"|"8043070"|"9388595"|"9995051").PN.	(US-PGPUB; USPAT; EPO)	OR	ON	ON	2023/08/30 01:14 PM
L127	1307	((self-propell$4) OR auto OR automatic$4) near4 ((swim$4 near2 pool) OR pool) near2 (clean$3 OR re-clean$3 OR reclean$3)	(US-PGPUB; USPAT; EPO)	OR	ON	ON	2023/08/30 01:14 PM
L128	37	21 AND 1	(US-PGPUB; USPAT; EPO)	OR	ON	ON	2023/08/30 01:14 PM
L129	0	21 AND 2	(US-PGPUB; USPAT; EPO)	OR	ON	ON	2023/08/30 01:14 PM
L130	16	21 AND 3	(US-PGPUB; USPAT; EPO)	OR	ON	ON	2023/08/30 01:14 PM
L131	149	21 AND 4	(US-PGPUB; USPAT; EPO)	OR	ON	ON	2023/08/30 01:14 PM
L132	1	21 AND 5	(US-PGPUB; USPAT; EPO)	OR	ON	ON	2023/08/30 01:14 PM
L133	16	21 AND 6	(US-PGPUB; USPAT; EPO)	OR	ON	ON	2023/08/30 01:14 PM
L134	19	21 AND 7	(US-PGPUB; USPAT; EPO)	OR	ON	ON	2023/08/30 01:14 PM
L135	13	21 AND 8	(US-PGPUB; USPAT; EPO)	OR	ON	ON	2023/08/30 01:14 PM
L136	18	21 AND 9	(US-PGPUB; USPAT; EPO)	OR	ON	ON	2023/08/30 01:14 PM
L137	48	21 AND 10	(US-PGPUB; USPAT; EPO)	OR	ON	ON	2023/08/30 01:14 PM
L138	13	21 AND 11	(US-PGPUB; USPAT; EPO)	OR	ON	ON	2023/08/30 01:14 PM

L139	13	21 AND 12	(US-PGPUB; USPAT; EPO)	OR	ON	ON	2023/08/30 01:14 PM
L140	13	21 AND 13	(US-PGPUB; USPAT; EPO)	OR	ON	ON	2023/08/30 01:14 PM
L141	704	21 AND 14	(US-PGPUB; USPAT; EPO)	OR	ON	ON	2023/08/30 01:14 PM
L142	13	21 AND 15	(US-PGPUB; USPAT; EPO)	OR	ON	ON	2023/08/30 01:14 PM
L143	13	21 AND 16	(US-PGPUB; USPAT; EPO)	OR	ON	ON	2023/08/30 01:14 PM
L144	13	21 AND 17	(US-PGPUB; USPAT; EPO)	OR	ON	ON	2023/08/30 01:14 PM
L145	27	swimming near4 pool$1 AND (camera$1 OR imager$1 OR (image ADJ sensor$1)) AND (region OR area OR ROI OR (region near2 interest$)) AND (response OR respond$3 OR react$3) WITH target$3 near4 (region OR area OR ROI OR (region near2 interest$))	(US-PGPUB; USPAT; EPO)	OR	ON	ON	2023/08/30 01:16 PM
L147	445	swimming near4 pool$1 AND (camera$1 OR imager$1 OR (image ADJ sensor$1)) WITH (region OR area OR ROI OR (region near2 interest$)) AND (response OR respond$3 OR react$3) WITH (region OR area OR ROI OR (region near2 interest$))	(US-PGPUB; USPAT; EPO)	OR	ON	ON	2023/08/30 01:17 PM
L148	49	swimming near4 pool$1 AND (camera$1 OR imager$1 OR (image ADJ sensor$1)) WITH (region OR area OR ROI OR (region near2 interest$)) WITH (response OR respond$3 OR react$3) WITH (region OR area OR ROI OR (region near2 interest$))	(US-PGPUB; USPAT; EPO)	OR	ON	ON	2023/08/30 01:17 PM
L149	66	swimming near4 pool$1 AND (camera$1 OR imager$1 OR (image ADJ sensor$1)) WITH (region OR area OR ROI OR (region near2	(US-PGPUB; USPAT; EPO)	OR	ON	ON	2023/08/30 01:17 PM

		interest$)) SAME (response OR respond$3 OR react$3) WITH (region OR area OR ROI OR (region near2 interest$))					
L150	102	147 AND @AD<="20120710"	(US-PGPUB; USPAT; EPO)	OR	ON	ON	2023/08/30 02:24 PM
L151	648	(camera$1 OR imager$1) WITH (CPU OR processor OR (control ADJ unit) OR controller) WITH motor WITH filter$3	(US-PGPUB; USPAT; EPO)	OR	ON	ON	2023/08/30 06:14 PM
L152	15	pool near2 clean$3 WITH camera$1 WITH motor$3	(US-PGPUB; USPAT; EPO)	OR	ON	ON	2023/08/30 06:14 PM
L153	124	pool near2 clean$3 WITH camera$1	(US-PGPUB; USPAT; EPO)	OR	ON	ON	2023/08/30 06:14 PM
L154	153	pool near2 clean$3 SAME camera$1	(US-PGPUB; USPAT; EPO)	OR	ON	ON	2023/08/30 06:14 PM
L155	1085	pool near2 clean$3 WITH (processor$1 OR control$4)	(US-PGPUB; USPAT; EPO)	OR	ON	ON	2023/08/30 06:14 PM
L156	42	43 AND 1	(US-PGPUB; USPAT; EPO)	OR	ON	ON	2023/08/30 06:14 PM
L157	0	43 AND 2	(US-PGPUB; USPAT; EPO)	OR	ON	ON	2023/08/30 06:14 PM
L158	18	43 AND 3	(US-PGPUB; USPAT; EPO)	OR	ON	ON	2023/08/30 06:14 PM
L159	64	43 AND 4	(US-PGPUB; USPAT; EPO)	OR	ON	ON	2023/08/30 06:14 PM
L160	1	43 AND 5	(US-PGPUB; USPAT; EPO)	OR	ON	ON	2023/08/30 06:14 PM
L161	610	43 AND (6 OR 7 OR 8 OR 9 OR 10 OR 11 OR 12 OR 13 OR 14 OR 15 OR 16 OR 17)	(US-PGPUB; USPAT; EPO)	OR	ON	ON	2023/08/30 06:14 PM
L162	94	(aqua ADJ products).as.	(US-PGPUB; USPAT; EPO)	OR	ON	ON	2023/08/30 06:14 PM
L163	2	(chemical near2 dispenser) WITH (camera$1 OR imager$1) WITH (CPU OR processor OR (control ADJ unit) OR controller) WITH motor WITH filter$3	(US-PGPUB; USPAT; EPO)	OR	ON	ON	2023/08/30 06:14 PM
L164	2	(chemical near2 dispenser) SAME (camera$1 OR imager$1) WITH (CPU OR processor OR	(US-PGPUB; USPAT; EPO)	OR	ON	ON	2023/08/30 06:14 PM

		(control ADJ unit) OR controller) WITH motor WITH filter$3					
L165	11	(chemical near2 dispenser) AND (camera$1 OR imager$1) WITH (CPU OR processor OR (control ADJ unit) OR controller) WITH motor WITH filter$3	(US-PGPUB; USPAT; EPO)	OR	ON	ON	2023/08/30 06:14 PM
L166	0	(chemical near2 dispenser) WITH pool near2 clean$3 WITH camera$1	(US-PGPUB; USPAT; EPO)	OR	ON	ON	2023/08/30 06:14 PM
L167	0	(chemical near2 dispenser) SAME pool near2 clean$3 WITH camera$1	(US-PGPUB; USPAT; EPO)	OR	ON	ON	2023/08/30 06:14 PM
L168	17	(chemical near2 dispenser) AND pool near2 clean$3 WITH camera$1	(US-PGPUB; USPAT; EPO)	OR	ON	ON	2023/08/30 06:14 PM
L169	130	(chemical near2 dispenser) AND pool near2 clean$3	(US-PGPUB; USPAT; EPO)	OR	ON	ON	2023/08/30 06:14 PM
L170	36	pool near2 clean$3 SAME camera$1 SAME (control$4 OR processor$1) SAME filter$3	(US-PGPUB; USPAT; EPO)	OR	ON	ON	2023/08/30 06:14 PM
L171	75	pool near4 clean$3 WITH camera WITH (processor OR controller OR CPU)	(US-PGPUB; USPAT; EPO)	OR	ON	ON	2023/08/30 06:14 PM
L172	507	((swim$4 near2 pool) OR pool) near4 clean$3 WITH (processor OR controller OR CPU)	(US-PGPUB; USPAT; EPO)	OR	ON	ON	2023/08/30 06:14 PM
L173	106	((swim$4 near2 pool) OR pool) near4 clean$3 SAME camera SAME (processor OR controller OR CPU)	(US-PGPUB; USPAT; EPO)	OR	ON	ON	2023/08/30 06:14 PM
L174	572	pool near2 clean$3 near4 robot$1	(US-PGPUB; USPAT; EPO)	OR	ON	ON	2023/08/30 06:14 PM
L175	207	(pool near2 clean$3 near4 robot$1) AND camera$1	(US-PGPUB; USPAT; EPO)	OR	ON	ON	2023/08/30 06:14 PM
L176	75	(pool near2 clean$3 near4 robot$1) SAME camera$1	(US-PGPUB; USPAT; EPO)	OR	ON	ON	2023/08/30 06:14 PM
L177	11	62 AND 1	(US-PGPUB; USPAT; EPO)	OR	ON	ON	2023/08/30 06:14 PM

L178	14	162 AND (camera OR image$1)	(US-PGPUB; USPAT; EPO)	OR	ON	ON	2023/08/30 06:17 PM
L179	0	(pool near2 clean$3 near4 robot$1) SAME camera$1 WITH (target$1 OR ROI OR (region near2 interest$1) OR area$1)	(US-PGPUB; USPAT; EPO)	OR	ON	ON	2023/08/30 06:20 PM
L180	108	(pool near2 clean$3 near4 robot$1) AND camera$1 WITH (target$1 OR ROI OR (region near2 interest$1) OR area$1)	(US-PGPUB; USPAT; EPO)	OR	ON	ON	2023/08/30 06:20 PM
L181	4	180 AND @AD<="20120710"	(US-PGPUB; USPAT; EPO)	OR	ON	ON	2023/08/30 06:21 PM
L182	0	62 AND 2	(US-PGPUB; USPAT; EPO)	OR	ON	ON	2023/08/30 07:38 PM
L183	3	62 AND 3	(US-PGPUB; USPAT; EPO)	OR	ON	ON	2023/08/30 07:38 PM
L184	0	62 AND 4	(US-PGPUB; USPAT; EPO)	OR	ON	ON	2023/08/30 07:38 PM
L185	0	62 AND 5	(US-PGPUB; USPAT; EPO)	OR	ON	ON	2023/08/30 07:38 PM
L186	379	62 AND (6 OR 7 OR 8 OR 9 OR 10 OR 11 OR 12 OR 13 OR 14 OR 15 OR 16 OR 17)	(US-PGPUB; USPAT; EPO)	OR	ON	ON	2023/08/30 07:38 PM
L187	68	(pool near2 clean$3 near4 robot$1) WITH camera$1	(US-PGPUB; USPAT; EPO)	OR	ON	ON	2023/08/30 07:38 PM
L188	28	((swim$4 near2 pool) OR pool) near4 clean$3 AND camera SAME (processor OR controller OR CPU) WITH motor	(US-PGPUB; USPAT; EPO)	OR	ON	ON	2023/08/30 07:38 PM
L189	51	((swim$4 near2 pool) OR pool) near4 clean$3 AND camera SAME (processor OR controller OR CPU) SAME motor	(US-PGPUB; USPAT; EPO)	OR	ON	ON	2023/08/30 07:38 PM
L190	2	(reclean$3 OR re-clean$3) near8 ((swim$4 near2 pool$1) OR pool$1) WITH motor	(US-PGPUB; USPAT; EPO)	OR	ON	ON	2023/08/30 07:38 PM
L191	2	(reclean$3 OR re-clean$3) near8 ((swim$4 near2 pool$1) OR pool$1) SAME motor	(US-PGPUB; USPAT; EPO)	OR	ON	ON	2023/08/30 07:38 PM

L192	13	(reclean$3 OR re-clean$3) near8 ((swim$4 near2 pool$1) OR pool$1) SAME (processor$1 OR controller OR CPU)	(US-PGPUB; USPAT; EPO)	OR	ON	ON	2023/08/30 07:38 PM
L193	13	(reclean$3 OR re-clean$3) near8 ((swim$4 near2 pool$1) OR pool$1) WITH (processor$1 OR controller OR CPU)	(US-PGPUB; USPAT; EPO)	OR	ON	ON	2023/08/30 07:38 PM
L194	204	((swim$4 near2 pool) OR pool) near4 clean$3 AND camera SAME (processor OR controller OR CPU) SAME (display$3 OR monitor$4)	(US-PGPUB; USPAT; EPO)	OR	ON	ON	2023/08/30 07:38 PM
L195	14	((swim$4 near2 pool) OR pool) near4 clean$3 WITH (clean OR cleanness OR neatness OR cleanliness) near2 (threshold$1 OR value$1)	(US-PGPUB; USPAT; EPO)	OR	ON	ON	2023/08/30 07:38 PM
L196	14	((swim$4 near2 pool) OR pool) near4 clean$3 SAME (clean OR cleanness OR neatness OR cleanliness) near2 (threshold$1 OR value$1)	(US-PGPUB; USPAT; EPO)	OR	ON	ON	2023/08/30 07:38 PM
L197	51	((swim$4 near2 pool) OR pool) near4 clean$3 AND (clean OR cleanness OR neatness OR cleanliness) near2 (threshold$1 OR value$1)	(US-PGPUB; USPAT; EPO)	OR	ON	ON	2023/08/30 07:38 PM
L198	68	(pool near2 clean$3 near4 robot$1) WITH camera$1	(US-PGPUB; USPAT; EPO)	OR	ON	ON	2023/08/30 07:38 PM
L199	17	78 AND 21	(US-PGPUB; USPAT; EPO)	OR	ON	ON	2023/08/30 07:38 PM
L200	0	82 AND 81	(US-PGPUB; USPAT; EPO)	OR	ON	ON	2023/08/30 07:38 PM
L201	0	82 AND 77	(US-PGPUB; USPAT; EPO)	OR	ON	ON	2023/08/30 07:38 PM
L202	13	21 AND 81	(US-PGPUB; USPAT; EPO)	OR	ON	ON	2023/08/30 07:38 PM
L204	51	((swim$4 near2 pool) OR pool) near4 clean$3 WITH (clean OR	(US-PGPUB; USPAT; EPO)	OR	ON	ON	2023/08/30 09:11 PM

		cleanness OR neatness OR cleanliness) near4 (characteristic$1 OR threshold$1 OR value$1 OR number$1)					
L205	54	((swim$4 near2 pool) OR pool) near4 clean$3 SAME (clean OR cleanness OR neatness OR cleanliness) near4 (characteristic$1 OR threshold$1 OR value$1 OR number$1)	(US-PGPUB; USPAT; EPO)	OR	ON	ON	2023/08/30 09:11 PM
L206	18	((swim$4 near2 pool) OR pool) WITH (clean OR cleanness OR neatness OR cleanliness) near4 (characteristic$1 OR threshold$1 OR value$1 OR number$1) WITH (water OR underwater)	(US-PGPUB; USPAT; EPO)	OR	ON	ON	2023/08/30 09:11 PM
L207	27	(((swim$4 near2 pool) OR pool) OR water OR underwater) near4 (image OR picture) WITH compar$3 WITH threshold$1	(US-PGPUB; USPAT; EPO)	OR	ON	ON	2023/08/30 09:11 PM
L208	83	((swim$4 near2 pool) OR pool) WITH (clean OR cleanness OR neatness OR cleanliness) near4 (characteristic$1 OR threshold$1 OR value$1 OR number$1)	(US-PGPUB; USPAT; EPO)	OR	ON	ON	2023/08/30 09:11 PM
L209	184	((swim$4 near2 pool) OR pool) near4 clean$3 AND (clean OR cleanness OR neatness OR cleanliness) near4 (characteristic$1 OR threshold$1 OR value$1 OR number$1)	(US-PGPUB; USPAT; EPO)	OR	ON	ON	2023/08/30 09:11 PM
L210	507	((swim$4 near2 pool) OR pool) near4 clean$3 WITH (processor OR controller OR CPU)	(US-PGPUB; USPAT; EPO)	OR	ON	ON	2023/08/30 09:11 PM
L211	41	93 AND 1	(US-PGPUB; USPAT; EPO)	OR	ON	ON	2023/08/30 09:11 PM
L212	0	93 AND 2	(US-PGPUB; USPAT; EPO)	OR	ON	ON	2023/08/30 09:11 PM
L213	15	93 AND 3	(US-PGPUB; USPAT; EPO)	OR	ON	ON	2023/08/30 09:11 PM

L214	25	93 AND 4	(US-PGPUB; USPAT; EPO)	OR	ON	ON	2023/08/30 09:11 PM
L215	1	93 AND 5	(US-PGPUB; USPAT; EPO)	OR	ON	ON	2023/08/30 09:11 PM
L216	363	93 AND (6 OR 7 OR 8 OR 9 OR 10 OR 11 OR 12 OR 13 OR 14 OR 15 OR 16 OR 17)	(US-PGPUB; USPAT; EPO)	OR	ON	ON	2023/08/30 09:11 PM
L217	21	43 AND 92	(US-PGPUB; USPAT; EPO)	OR	ON	ON	2023/08/30 09:11 PM
L218	13	43 AND 77	(US-PGPUB; USPAT; EPO)	OR	ON	ON	2023/08/30 09:11 PM
L219	12	(reclean$3 OR re-clean$3 OR (clean$3 near2 (again OR repetitive$3))) WITH pool$1 WITH (debris OR trash)	(US-PGPUB; USPAT; EPO)	OR	ON	ON	2023/08/30 09:11 PM
L220	97	swim$5 near4 pool WITH (camera OR imager OR (image ADJ sensor)) WITH (target$3 OR ROI OR (region near2 interest) OR region OR area)	(US-PGPUB; USPAT; EPO)	OR	ON	ON	2023/08/30 09:16 PM
L221	7	swim$5 near4 pool WITH (camera OR imager OR (image ADJ sensor)) WITH (target$3 OR ROI OR (region near2 interest) OR region OR area) WITH (characteristic$1 OR cleanliness OR clean$3)	(US-PGPUB; USPAT; EPO)	OR	ON	ON	2023/08/30 09:17 PM
L227	75	(image$1 OR picture$1 OR frame$1) WITH (target$3 OR ROI OR (region near2 interest) OR region OR area) near8 (detect$3 OR sens$3) near4(characteristic$1 OR cleanliness) WITH (response OR respond$4) near8 (detect$3 OR sens$3) near4(characteristic$1 OR cleanliness) near6 (target$3 OR ROI OR region OR area OR (region near2 interest))	(US-PGPUB; USPAT; EPO)	OR	ON	ON	2023/08/30 09:21 PM
L228	47	227 AND @AD<="20120710"	(US-PGPUB; USPAT; EPO)	OR	ON	ON	2023/08/30 09:22 PM
L229	0	228 AND swim$4 near4	(US-PGPUB; USPAT;	OR	ON	ON	2023/08/30

		pool$1	EPO)				09:22 PM
L230	0	228 AND pool$1	(US-PGPUB; USPAT; EPO)	OR	ON	ON	2023/08/30 09:22 PM
L231	0	(image$1 OR picture$1 OR frame$1) WITH (target$3 OR ROI OR (region near2 interest) OR region OR area) near8 (detect$3 OR sens$3) near4(characteristic$1 OR cleanliness) WITH (response OR respond$4) near8 (detect$3 OR sens$3) near4 cleanliness near6 (target$3 OR ROI OR region OR area OR (region near2 interest))	(US-PGPUB; USPAT; EPO)	OR	ON	ON	2023/08/30 09:23 PM

PE2E SEARCH - Search History (Interference)

Ref #	Hits	Search Query	DBs	Default Operator	Plurals	British Equivalents	Time Stamp
N1	0	((swim$4 near2 pool) OR spa) WITH (image$1 OR frame$1 OR picture$1) WITH (camera$1 OR imager$1 OR (image ADJ sensor$1)) WITH detect$3 near4 (characteristic$1 OR cleanliness) near6 (target$3 OR focus$3) near4 (area OR region OR ROI) WITH control near6 (response$1 OR respond$3) near8 (characteristic$1 OR cleanliness) near6 (target$3 OR focus$3) near4 (area OR region OR ROI)	(US-PGPUB; USPAT)	OR	ON	ON	2023/08/30 10:37 PM
N2	0	(equipment OR robot OR "device") near8 ((swim$4 near2 pool) OR spa) WITH (image$1 OR frame$1 OR picture$1) WITH (camera$1 OR imager$1 OR (image ADJ sensor$1)) near8 (processor OR controller) near8 (equipment OR robot	(US-PGPUB; USPAT)	OR	ON	ON	2023/08/30 10:41 PM

		OR "device") WITH (visual OR video) near8 (camera$1 OR imager$1 OR (image ADJ sensor$1)) WITH (response$1 OR respond$3) near8 control$4 near4 (equipment OR robot OR "device")					
N3	0	clean$4 near8 swim$4 near4 pool WITH mov$3 near6 (body OR shell OR housing) WITH filter near6 debris near8 (submerg$3 OR bottom) near4 surface$1 WITH (camera$1 OR imager$1 OR (image ADJ sensor$1)) near6 captur$3 near4 (image$1 OR frame$1 OR picture$1) near6 (object$1 OR target$1) WITH (controller OR processor) near8 (camera$1 OR imager$1 OR (image ADJ sensor$1)) WITH (response OR respond$3) near6 captur$3 near4 (image$1 OR frame$1 OR picture$1) near8 mov$3 near6 (body OR shell OR housing)	(US-PGPUB; USPAT)	OR	ON	ON	2023/08/30 10:46 PM

Main Concept Text
==========
automatic pool cleaner

Concept Modifiers (4)
==========
4. More Like Text: cleanliness

3. More Like Text: response target

2. More Like Text: filter debris

1. More Like Text: motor

Filters (1)
==========
Publication Date: From 1990-01-01 To 2012-07-10

Options
=======
De-dup: None
Relevance Cut-off: None
Sort: Relevance

Content: Non-Patent Literature (23)
==========
IEEE Xplore Publications: IEEE Periodicals
IEEE Xplore Publications: IEEE Conferences
IEEE Xplore Publications: IEEE Standards
IEEE Xplore Publications: IEEE Early Access
IEEE Xplore Publications: SMPTE Periodicals
IEEE Xplore Publications: SMPTE Conferences
IEEE Xplore Publications: SMPTE Standards
IEEE Xplore Publications: MIT Press eBooks
IEEE Xplore Publications: Wiley-IEEE eBooks
IEEE Xplore Publications: IBM Periodicals
IEEE Xplore Publications: URSI Periodicals
IEEE Xplore Publications: VDE Conferences
IEEE Xplore Publications: Periodicals from China
IP.com Prior Art Database: The IP.com Journal
IP.com Prior Art Database: Internet Society RFC
IP.com Prior Art Database: IBM TDB Archive
IP.com Prior Art Database: Legacy Journals
IP.com Prior Art Database: Software Patent Institute
OnePetro.org: Periodicals at OnePetro.org
OnePetro.org: Conferences at OnePetro.org
Other Literature: IBM Redbooks

Other Literature: PubMed Central
Other Literature: arXiv.org

Bibliographic Data

Application No: 17/572,388

Foreign Priority claimed: ○ Yes ◉ No

35 USC 119 (a-d) conditions met: ☐ Yes ☑ No ☐ Met After Allowance

Verified and Acknowledged: /ALLEN WONG/ (Examiner's Signature) | Initials

Title: POOL CLEANING SYSTEM AND METHOD TO AUTOMATICALLY CLEAN SURFACES OF A POOL USING IMAGES FROM A CAMERA

FILING or 371(c) DATE	CLASS	GROUP ART UNIT	ATTORNEY DOCKET NO.
01/10/2022	348	2488	105650-1292756
RULE			

APPLICANTS

ZODIAC POOL SYSTEMS LLC, Carlsbad, CA, UNITED STATES

INVENTORS

Kameshwar Durvasula, Garfield, NJ, UNITED STATES

William Londono Correa, Bloomfield, NJ, UNITED STATES

CONTINUING DATA

This application is a CON of 17143624 01/07/2021 PAT 11262766

17143624 is a CON of 16919750 07/02/2020 PAT 11003191

16919750 is a CON of 16416840 05/20/2019 PAT 10739785

16416840 is a CON of 15973983 05/08/2018 PAT 10338599

15973983 is a CON of 15207065 07/11/2016 PAT 9995051

15207065 is a CON of 13545918 07/10/2012 PAT 9388595

FOREIGN APPLICATIONS

IF REQUIRED, FOREIGN LICENSE GRANTED**

01/19/2022

STATE OR COUNTRY

UNITED STATES

ADDRESS

Kilpatrick Townsend & Stockton LLP - East Coast
MAILSTOP: IP DOCKETING - 22
1100 PEACHTREE STREET
SUITE 2800
ATLANTA, GA 30309

UNITED STATES

FILING FEE RECEIVED

$1,820

UNITED STATES PATENT AND TRADEMARK OFFICE

UNITED STATES DEPARTMENT OF COMMERCE
United States Patent and Trademark Office
Address: COMMISSIONER FOR PATENTS
P.O. Box 1450
Alexandria, Virginia 22313-1450
www.uspto.gov

NOTICE OF ALLOWANCE AND FEE(S) DUE

23370 7590 09/06/2023
Kilpatrick Townsend & Stockton LLP - East Coast
MAILSTOP: IP DOCKETING - 22
1100 PEACHTREE STREET
SUITE 2800
ATLANTA, GA 30309

EXAMINER
WONG, ALLEN C

ART UNIT	PAPER NUMBER
2488	

DATE MAILED: 09/06/2023

APPLICATION NO.	FILING DATE	FIRST NAMED INVENTOR	ATTORNEY DOCKET NO.	CONFIRMATION NO.
17/572,388	01/10/2022	Kameshwar Durvasula	105650-1292756	1072

TITLE OF INVENTION: POOL CLEANING SYSTEM AND METHOD TO AUTOMATICALLY CLEAN SURFACES OF A POOL USING IMAGES FROM A CAMERA

APPLN. TYPE	ENTITY STATUS	ISSUE FEE DUE	PUBLICATION FEE DUE	PREV. PAID ISSUE FEE	TOTAL FEE(S) DUE	DATE DUE
nonprovisional	UNDISCOUNTED	$1200	$0.00	$0.00	$1200	12/06/2023

THE APPLICATION IDENTIFIED ABOVE HAS BEEN EXAMINED AND IS ALLOWED FOR ISSUANCE AS A PATENT. PROSECUTION ON THE MERITS IS CLOSED. THIS NOTICE OF ALLOWANCE IS NOT A GRANT OF PATENT RIGHTS. THIS APPLICATION IS SUBJECT TO WITHDRAWAL FROM ISSUE AT THE INITIATIVE OF THE OFFICE OR UPON PETITION BY THE APPLICANT. SEE 37 CFR 1.313 AND MPEP 1308.

THE ISSUE FEE AND PUBLICATION FEE (IF REQUIRED) MUST BE PAID WITHIN THREE MONTHS FROM THE MAILING DATE OF THIS NOTICE OR THIS APPLICATION SHALL BE REGARDED AS ABANDONED. THIS STATUTORY PERIOD CANNOT BE EXTENDED. SEE 35 U.S.C. 151. THE ISSUE FEE DUE INDICATED ABOVE DOES NOT REFLECT A CREDIT FOR ANY PREVIOUSLY PAID ISSUE FEE IN THIS APPLICATION. IF AN ISSUE FEE HAS PREVIOUSLY BEEN PAID IN THIS APPLICATION (AS SHOWN ABOVE), THE RETURN OF PART B OF THIS FORM WILL BE CONSIDERED A REQUEST TO REAPPLY THE PREVIOUSLY PAID ISSUE FEE TOWARD THE ISSUE FEE NOW DUE.

HOW TO REPLY TO THIS NOTICE:

I. Review the ENTITY STATUS shown above. If the ENTITY STATUS is shown as SMALL or MICRO, verify whether entitlement to that entity status still applies.

If the ENTITY STATUS is the same as shown above, pay the TOTAL FEE(S) DUE shown above.

If the ENTITY STATUS is changed from that shown above, on PART B - FEE(S) TRANSMITTAL, complete section number 5 titled "Change in Entity Status (from status indicated above)".

For purposes of this notice, small entity fees are 40% the amount of undiscounted fees, and micro entity fees are 20% the amount of undiscounted fees.

II. PART B - FEE(S) TRANSMITTAL, or its equivalent, must be completed and returned to the United States Patent and Trademark Office (USPTO) with your ISSUE FEE and PUBLICATION FEE (if required). If you are charging the fee(s) to your deposit account, section "4b" of Part B - Fee(s) Transmittal should be completed. If an equivalent of Part B is filed, a request to reapply a previously paid issue fee must be clearly made, and delays in processing may occur due to the difficulty in recognizing the paper as an equivalent of Part B.

III. All communications regarding this application must give the application number. Please direct all communications prior to issuance to Mail Stop ISSUE FEE unless advised to the contrary.

IMPORTANT REMINDER: Maintenance fees are due in utility patents issuing on applications filed on or after Dec. 12, 1980. It is patentee's responsibility to ensure timely payment of maintenance fees when due. More information is available at www.uspto.gov/PatentMaintenanceFees.

PART B - FEE(S) TRANSMITTAL

Complete and send this form, together with applicable fee(s), by mail or fax, or via EFS-Web.

By mail, send to: Mail Stop ISSUE FEE
Commissioner for Patents
P.O. Box 1450
Alexandria, Virginia 22313-1450

By fax, send to: (571)-273-2885

INSTRUCTIONS: This form should be used for transmitting the ISSUE FEE and PUBLICATION FEE (if required). Blocks 1 through 5 should be completed where appropriate. All further correspondence will be mailed to the current correspondence address as indicated unless corrected below or directed otherwise in Block 1, by (a) specifying a new correspondence address; and/or (b) indicating a separate "FEE ADDRESS" for maintenance fee notifications. **Because electronic patent issuance may occur shortly after issue fee payment, any desired continuing application should preferably be filed prior to payment of this issue fee in order not to jeopardize copendency.**

CURRENT CORRESPONDENCE ADDRESS (Note: Use Block 1 for any change of address)

23370 7590 09/06/2023
Kilpatrick Townsend & Stockton LLP - East Coast
MAILSTOP: IP DOCKETING - 22
1100 PEACHTREE STREET
SUITE 2800
ATLANTA, GA 30309

Note: A certificate of mailing can only be used for domestic mailings of the Fee(s) Transmittal. This certificate cannot be used for any other accompanying papers. Each additional paper, such as an assignment or formal drawing, must have its own certificate of mailing or transmission.

Certificate of Mailing or Transmission

I hereby certify that this Fee(s) Transmittal is being deposited with the United States Postal Service with sufficient postage for first class mail in an envelope addressed to the Mail Stop ISSUE FEE address above, or being transmitted to the USPTO via EFS-Web or by facsimile to (571) 273-2885, on the date below.

(Typed or printed name)
(Signature)
(Date)

APPLICATION NO.	FILING DATE	FIRST NAMED INVENTOR	ATTORNEY DOCKET NO.	CONFIRMATION NO.
17/572,388	01/10/2022	Kameshwar Durvasula	105650-1292756	1072

TITLE OF INVENTION: POOL CLEANING SYSTEM AND METHOD TO AUTOMATICALLY CLEAN SURFACES OF A POOL USING IMAGES FROM A CAMERA

APPLN. TYPE	ENTITY STATUS	ISSUE FEE DUE	PUBLICATION FEE DUE	PREV. PAID ISSUE FEE	TOTAL FEE(S) DUE	DATE DUE
nonprovisional	UNDISCOUNTED	$1200	$0.00	$0.00	$1200	12/06/2023

EXAMINER	ART UNIT	CLASS-SUBCLASS
WONG, ALLEN C	2488	348-114000

1. Change of correspondence address or indication of "Fee Address" (37 CFR 1.363).

❑ Change of correspondence address (or Change of Correspondence Address form PTO/AIA/122 or PTO/SB/122) attached.

❑ "Fee Address" indication (or "Fee Address" Indication form PTO/AIA/47 or PTO/SB/47; Rev 03-02 or more recent) attached. **Use of a Customer Number is required.**

2. For printing on the patent front page, list
(1) The names of up to 3 registered patent attorneys or agents OR, alternatively,
(2) The name of a single firm (having as a member a registered attorney or agent) and the names of up to 2 registered patent attorneys or agents. If no name is listed, no name will be printed.

1_____
2_____
3_____

3. ASSIGNEE NAME AND RESIDENCE DATA TO BE PRINTED ON THE PATENT (print or type)

PLEASE NOTE: Unless an assignee is identified below, no assignee data will appear on the patent. If an assignee is identified below, the document must have been previously recorded, or filed for recordation, as set forth in 37 CFR 3.11 and 37 CFR 3.81(a). Completion of this form is NOT a substitute for filing an assignment.

(A) NAME OF ASSIGNEE (B) RESIDENCE: (CITY and STATE OR COUNTRY)

Please check the appropriate assignee category or categories (will not be printed on the patent) : ❑ Individual ❑ Corporation or other private group entity ❑ Government

4a. Fees submitted: ❑Issue Fee ❑Publication Fee (if required)

4b. Method of Payment: *(Please first reapply any previously paid fee shown above)*

❑ Electronic Payment via Patent Center or EFS-Web ❑ Enclosed check ❑ Non-electronic payment by credit card (Attach form PTO-2038)

❑ The Director is hereby authorized to charge the required fee(s), any deficiency, or credit any overpayment to Deposit Account No. _____

5. **Change in Entity Status** (from status indicated above)

❑ Applicant certifying micro entity status. See 37 CFR 1.29

NOTE: Absent a valid certification of Micro Entity Status (see forms PTO/SB/15A and 15B), issue fee payment in the micro entity amount will not be accepted at the risk of application abandonment.

❑ Applicant asserting small entity status. See 37 CFR 1.27

NOTE: If the application was previously under micro entity status, checking this box will be taken to be a notification of loss of entitlement to micro entity status.

❑ Applicant changing to regular undiscounted fee status.

NOTE: Checking this box will be taken to be a notification of loss of entitlement to small or micro entity status, as applicable.

NOTE: This form must be signed in accordance with 37 CFR 1.31 and 1.33. See 37 CFR 1.4 for signature requirements and certifications.

Authorized Signature _____ Date _____

Typed or printed name _____ Registration No. _____

UNITED STATES DEPARTMENT OF COMMERCE
United States Patent and Trademark Office
Address: COMMISSIONER FOR PATENTS
P.O. Box 1450
Alexandria, Virginia 22313-1450
www.uspto.gov

APPLICATION NO.	FILING DATE	FIRST NAMED INVENTOR	ATTORNEY DOCKET NO.	CONFIRMATION NO.
17/572,388	01/10/2022	Kameshwar Durvasula	105650-1292756	1072

23370 7590 09/06/2023
Kilpatrick Townsend & Stockton LLP - East Coast
MAILSTOP: IP DOCKETING - 22
1100 PEACHTREE STREET
SUITE 2800
ATLANTA, GA 30309

EXAMINER
WONG, ALLEN C

ART UNIT	PAPER NUMBER
2488	

DATE MAILED: 09/06/2023

Determination of Patent Term Adjustment under 35 U.S.C. 154 (b)
(Applications filed on or after May 29, 2000)

The Office has discontinued providing a Patent Term Adjustment (PTA) calculation with the Notice of Allowance.

Section 1(h)(2) of the AIA Technical Corrections Act amended 35 U.S.C. 154(b)(3)(B)(i) to eliminate the requirement that the Office provide a patent term adjustment determination with the notice of allowance. See Revisions to Patent Term Adjustment, 78 Fed. Reg. 19416, 19417 (Apr. 1, 2013). Therefore, the Office is no longer providing an initial patent term adjustment determination with the notice of allowance. The Office will continue to provide a patent term adjustment determination with the Issue Notification Letter that is mailed to applicant approximately three weeks prior to the issue date of the patent, and will include the patent term adjustment on the patent. Any request for reconsideration of the patent term adjustment determination (or reinstatement of patent term adjustment) should follow the process outlined in 37 CFR 1.705.

Any questions regarding the Patent Term Extension or Adjustment determination should be directed to the Office of Patent Legal Administration at (571)-272-7702. Questions relating to issue and publication fee payments should be directed to the Customer Service Center of the Office of Patent Publication at 1-(888)-786-0101 or (571)-272-4200.

OMB Clearance and PRA Burden Statement for PTOL-85 Part B

The Paperwork Reduction Act (PRA) of 1995 requires Federal agencies to obtain Office of Management and Budget approval before requesting most types of information from the public. When OMB approves an agency request to collect information from the public, OMB (i) provides a valid OMB Control Number and expiration date for the agency to display on the instrument that will be used to collect the information and (ii) requires the agency to inform the public about the OMB Control Number's legal significance in accordance with 5 CFR 1320.5(b).

The information collected by PTOL-85 Part B is required by 37 CFR 1.311. The information is required to obtain or retain a benefit by the public which is to file (and by the USPTO to process) an application. Confidentiality is governed by 35 U.S.C. 122 and 37 CFR 1.14. This collection is estimated to take 30 minutes to complete, including gathering, preparing, and submitting the completed application form to the USPTO. Time will vary depending upon the individual case. Any comments on the amount of time you require to complete this form and/or suggestions for reducing this burden, should be sent to the Chief Information Officer, U.S. Patent and Trademark Office, U.S. Department of Commerce, P.O. Box 1450, Alexandria, Virginia 22313-1450. DO NOT SEND FEES OR COMPLETED FORMS TO THIS ADDRESS. SEND TO: Commissioner for Patents, P.O. Box 1450, Alexandria, Virginia 22313-1450. Under the Paperwork Reduction Act of 1995, no persons are required to respond to a collection of information unless it displays a valid OMB control number.

Privacy Act Statement

The Privacy Act of 1974 (P.L. 93-579) requires that you be given certain information in connection with your submission of the attached form related to a patent application or patent. Accordingly, pursuant to the requirements of the Act, please be advised that: (1) the general authority for the collection of this information is 35 U.S.C. 2(b)(2); (2) furnishing of the information solicited is voluntary; and (3) the principal purpose for which the information is used by the U.S. Patent and Trademark Office is to process and/or examine your submission related to a patent application or patent. If you do not furnish the requested information, the U.S. Patent and Trademark Office may not be able to process and/or examine your submission, which may result in termination of proceedings or abandonment of the application or expiration of the patent.

The information provided by you in this form will be subject to the following routine uses:

1. The information on this form will be treated confidentially to the extent allowed under the Freedom of Information Act (5 U.S.C. 552) and the Privacy Act (5 U.S.C 552a). Records from this system of records may be disclosed to the Department of Justice to determine whether disclosure of these records is required by the Freedom of Information Act.
2. A record from this system of records may be disclosed, as a routine use, in the course of presenting evidence to a court, magistrate, or administrative tribunal, including disclosures to opposing counsel in the course of settlement negotiations.
3. A record in this system of records may be disclosed, as a routine use, to a Member of Congress submitting a request involving an individual, to whom the record pertains, when the individual has requested assistance from the Member with respect to the subject matter of the record.
4. A record in this system of records may be disclosed, as a routine use, to a contractor of the Agency having need for the information in order to perform a contract. Recipients of information shall be required to comply with the requirements of the Privacy Act of 1974, as amended, pursuant to 5 U.S.C. 552a(m).
5. A record related to an International Application filed under the Patent Cooperation Treaty in this system of records may be disclosed, as a routine use, to the International Bureau of the World Intellectual Property Organization, pursuant to the Patent Cooperation Treaty.
6. A record in this system of records may be disclosed, as a routine use, to another federal agency for purposes of National Security review (35 U.S.C. 181) and for review pursuant to the Atomic Energy Act (42 U.S.C. 218(c)).
7. A record from this system of records may be disclosed, as a routine use, to the Administrator, General Services, or his/her designee, during an inspection of records conducted by GSA as part of that agency's responsibility to recommend improvements in records management practices and programs, under authority of 44 U.S.C. 2904 and 2906. Such disclosure shall be made in accordance with the GSA regulations governing inspection of records for this purpose, and any other relevant (i.e., GSA or Commerce) directive. Such disclosure shall not be used to make determinations about individuals.
8. A record from this system of records may be disclosed, as a routine use, to the public after either publication of the application pursuant to 35 U.S.C. 122(b) or issuance of a patent pursuant to 35 U.S.C. 151. Further, a record may be disclosed, subject to the limitations of 37 CFR 1.14, as a routine use, to the public if the record was filed in an application which became abandoned or in which the proceedings were terminated and which application is referenced by either a published application, an application open to public inspection or an issued patent.
9. A record from this system of records may be disclosed, as a routine use, to a Federal, State, or local law enforcement agency, if the USPTO becomes aware of a violation or potential violation of law or regulation.

Notice of Allowability	Application No. 17/572,388	Applicant(s) Durvasula et al.	
	Examiner ALLEN C WONG	Art Unit 2488	AIA (FITF) Status Yes

-- The MAILING DATE of this communication appears on the cover sheet with the correspondence address--

All claims being allowable, PROSECUTION ON THE MERITS IS (OR REMAINS) CLOSED in this application. If not included herewith (or previously mailed), a Notice of Allowance (PTOL-85) or other appropriate communication will be mailed in due course. **THIS NOTICE OF ALLOWABILITY IS NOT A GRANT OF PATENT RIGHTS.** This application is subject to withdrawal from issue at the initiative of the Office or upon petition by the applicant. See 37 CFR 1.313 and MPEP 1308.

1. ☑ This communication is responsive to amendment filed 6/29/23.
   ☐ A declaration(s)/affidavit(s) under **37 CFR 1.130(b)** was/were filed on _____.

2. ☐ An election was made by the applicant in response to a restriction requirement set forth during the interview on _____; the restriction requirement and election have been incorporated into this action.

3. ☑ The allowed claim(s) is/are 20-39 . As a result of the allowed claim(s), you may be eligible to benefit from the **Patent Prosecution Highway** program at a participating intellectual property office for the corresponding application. For more information, please see **http://www.uspto.gov/patents/init_events/pph/index.jsp** or send an inquiry to **PPHfeedback@uspto.gov.**

4. ☐ Acknowledgment is made of a claim for foreign priority under 35 U.S.C. § 119(a)-(d) or (f).

   Certified copies:

   a) ☐ All b) ☐ Some* c) ☐ None of the:

   1. ☐ Certified copies of the priority documents have been received.
   2. ☐ Certified copies of the priority documents have been received in Application No. _____ .
   3. ☐ Copies of the certified copies of the priority documents have been received in this national stage application from the International Bureau (PCT Rule 17.2(a)).

   * Certified copies not received: _____ .

Applicant has THREE MONTHS FROM THE "MAILING DATE" of this communication to file a reply complying with the requirements noted below. Failure to timely comply will result in ABANDONMENT of this application.
THIS THREE-MONTH PERIOD IS NOT EXTENDABLE.

5. ☐ CORRECTED DRAWINGS (as "replacement sheets") must be submitted.
   ☐ including changes required by the attached Examiner's Amendment / Comment or in the Office action of Paper No./Mail Date _____ .

   Identifying indicia such as the application number (see 37 CFR 1.84(c)) should be written on the drawings in the front (not the back) of each sheet. Replacement sheet(s) should be labeled as such in the header according to 37 CFR 1.121(d).

6. ☐ DEPOSIT OF and/or INFORMATION about the deposit of BIOLOGICAL MATERIAL must be submitted. Note the attached Examiner's comment regarding REQUIREMENT FOR THE DEPOSIT OF BIOLOGICAL MATERIAL.

Attachment(s)

1. ☑ Notice of References Cited (PTO-892)
2. ☐ Information Disclosure Statements (PTO/SB/08), Paper No./Mail Date _____.
3. ☐ Examiner's Comment Regarding Requirement for Deposit of Biological Material _____.
4. ☐ Interview Summary (PTO-413), Paper No./Mail Date. _____.
5. ☐ Examiner's Amendment/Comment
6. ☑ Examiner's Statement of Reasons for Allowance
7. ☐ Other _____.

/ALLEN C WONG/
Primary Examiner, Art Unit 2488

WYBOTICS EX1006
Wybotics v. Zodiac
Page 146

DETAILED ACTION

Notice of Pre-AIA or AIA Status

The present application is being examined under the pre-AIA first to invent provisions.

Allowable Subject Matter

Claims 20-39 are allowed.

The following is an examiner's statement of reasons for allowance: the present invention pertains to pool cleaning system for cleaning debris on submerged surfaces of swimming pools.

With regards to claim 20, Porat (US 2011/0290707) discloses a self-propelled pool cleaning system for cleaning debris from a submerged surface of a swimming pool (paragraph 78, fig.1), comprising:

a vehicle body (paragraph 78, ln.8-11);

means for moving the vehicle body within the swimming pool (paragraph 78, ln.8-11);

a filter configured to retain debris collected from the submerged surface (paragraph 78, ln.8-11).

Meneire (US 7,362,351) discloses at least one camera for capturing an image of at least a first object within the swimming pool (col.6, ln.21-30);

a controller in electronic communication with the at least one camera, and configured to generate an image to be displayed (col.14, ln.52-58).

Hui (US 2011/0049023) discloses a self-propelled pool cleaner for cleaning debris from a submerged surface of a swimming pool (paragraph 11), comprising:

a vehicle body (paragraph 51);

means for moving the vehicle body within the swimming pool (paragraph 50).

The prior art, either singularly or in combination, does not disclose the limitation "...a controller (i) in electronic communication with the at least one camera and (ii) configured to generate, in response to the captured image, at least one control signal to cause movement of the body within the swimming pool to, or away from, the first object" of claim 20.

Thus, the prior art does not disclose the aforementioned limitation used in combination with all of the other limitations of claim 20.

With regards to claim 21, Porat (US 2011/0290707) discloses a pool system (paragraph 78, fig.1) comprising:

at least one piece of equipment for a swimming pool or spa (paragraph 78, ln.8-11);

means for moving the at least one piece of equipment within the swimming pool (paragraph 78, ln.8-11).

Meneire (US 7,362,351) discloses one or more cameras configured to capture video or images of at least a portion of a location including the swimming pool or spa (col.6, ln.21-30);

a controller in electronic communication with the at least one camera, and configured to generate an image to be displayed (col.14, ln.52-58).

Hui (US 2011/0049023) discloses a discloses a pool system (paragraph 11) comprising:

at least one piece of equipment for a swimming pool or spa (paragraph 51);

means for moving the at least one piece of equipment within the swimming pool (paragraph 50).

The prior art, either singularly or in combination, does not disclose the limitation "...a controller in communication with the at least one piece of equipment and the one or more cameras, the controller configured to receive visual data from the one or more cameras and determine a control action for the at least one piece of equipment based on the received visual data" of claim 21.

Thus, the prior art does not disclose the aforementioned limitation used in combination with all of the other limitations of claim 21.

With regards to claim 31, Porat (US 2011/0290707) discloses a method for cleaning a pool comprising:

moving a vehicle body within the swimming pool (paragraph 78, ln.8-11);

retaining debris collected from a submerged surface (paragraph 78, ln.8-11).

Meneire (US 7,362,351) discloses a method for monitoring a pool system (col.6, ln.21-30), the method comprising:

receiving images of at least a portion of a location including the swimming pool or spa from one or more cameras (col.6, ln.21-30);

generating an image to be displayed (col.14, ln.52-58).

The prior art, either singularly or in combination, does not disclose "a method for monitoring a pool system, the method comprising: receiving images of at least a portion of a location including the swimming pool or spa from one or more cameras; determining a target area and detecting a characteristic of the target area based on the images; and generating a control response based on the detected characteristic of the target area" of claim 31.

Thus, the prior art does not disclose the aforementioned claim 31.

Any comments considered necessary by applicant must be submitted no later than the payment of the issue fee and, to avoid processing delays, should preferably accompany the issue fee. Such submissions should be clearly labeled "Comments on Statement of Reasons for Allowance."

Terminal Disclaimer

The terminal disclaimer filed on 6/29/23 disclaiming the terminal portion of any patent granted on this application which would extend beyond the expiration date of **the full statutory term of US Patent Numbers 9995051, 11003191 and 11262766** has been reviewed and is accepted. The terminal disclaimer has been recorded.

Contact Information

Any inquiry concerning this communication or earlier communications from the examiner should be directed to ALLEN C WONG whose telephone number is (571)272-7341. The examiner can normally be reached on Flex Monday-Thursday 9:30am-7:30pm.

Examiner interviews are available via telephone, in-person, and video conferencing using a USPTO supplied web-based collaboration tool. To schedule an interview, applicant is encouraged to use the USPTO Automated Interview Request (AIR) at http://www.uspto.gov/interviewpractice.

If attempts to reach the examiner by telephone are unsuccessful, the examiner's supervisor, Sath V Perungavoor can be reached on 571-272-7455. The fax phone number for the organization where this application or proceeding is assigned is 571-273-8300.

Information regarding the status of an application may be obtained from the Patent Application Information Retrieval (PAIR) system. Status information for published applications may be obtained from either Private PAIR or Public PAIR. Status information for unpublished applications is available through Private PAIR only. For more information about the PAIR system, see http://pair-direct.uspto.gov. Should

you have questions on access to the Private PAIR system, contact the Electronic Business Center (EBC) at 866-217-9197 (toll-free). If you would like assistance from a USPTO Customer Service Representative or access to the automated information system, call 800-786-9199 (IN USA OR CANADA) or 571-272-1000.

/ALLEN C WONG/
Primary Examiner, Art Unit 2488

UNITED STATES
PATENT AND TRADEMARK OFFICE

P.O. Box 1450
Alexandria, VA 22313 - 1450
www.uspto.gov

ELECTRONIC ACKNOWLEDGEMENT RECEIPT

APPLICATION #	RECEIPT DATE / TIME	ATTORNEY DOCKET #
17/572,388	**11/30/2023 09:24:54 PM Z ET**	**105650-1292756**

Title of Invention

POOL CLEANING SYSTEM AND METHOD TO AUTOMATICALLY CLEAN SURFACES OF A POOL USING IMAGES FROM A CAMERA

Application Information

APPLICATION TYPE	Utility - Nonprovisional Application under 35 USC 111(a)	PATENT #	-
CONFIRMATION #	1072	FILED BY	Anthony Guebert
PATENT CENTER #	63449698	FILING DATE	01/10/2022
CUSTOMER #	23370	FIRST NAMED INVENTOR	Kameshwar Durvasula
CORRESPONDENCE ADDRESS	-	AUTHORIZED BY	-

Documents

TOTAL DOCUMENTS: 1

DOCUMENT	PAGES	DESCRIPTION	SIZE (KB)
1292756_312_Amend.pdf	6	Amendment after Notice of Allowance (Rule 312)	92 KB

Digest

DOCUMENT	MESSAGE DIGEST(SHA-512)
1292756_312_Amend.pdf	80BEEC22EF96EB08E67E0AD947250448DA5CD6117855561A94A90BB09C422142FF46F44D2662073D35F04EDDE7276E5B14819C8C1189E3B385AEAD6482FDD1E3

This Acknowledgement Receipt evidences receipt on the noted date by the USPTO of the indicated documents, characterized by the applicant, and including page counts, where applicable. It serves as evidence of receipt similar to a Post Card, as described in MPEP 503.

New Applications Under 35 U.S.C. 111

If a new application is being filed and the application includes the necessary components for filing date (see 37 CFR 1.53(b)-(d) and MPEP 506), a Filing Receipt (37 CFR 1.54) will be issued in due course and the date shown on this Acknowledgement Receipt will establish the filing date of the application

National Stage of an International Application under 35 U.S.C. 371

If a timely submission to enter the national stage of an international application is compliant with the conditions of 35 U.S.C. 371 and other applicable requirements a Form PCT/DO/EO/903 indicating acceptance of the application as a national stage submission under 35 U.S.C. 371 will be issued in addition to the Filing Receipt, in due course.

New International Application Filed with the USPTO as a Receiving Office

If a new international application is being filed and the international application includes the necessary components for an international filing date (see PCT Article 11 and MPEP 1810), a Notification of the International Application Number and of the International Filing Date (Form PCT/RO/105) will be issued in due course, subject to prescriptions concerning national security, and the date shown on this Acknowledgement Receipt will establish the international filing date of the application.

I hereby certify that this correspondence is being filed with the United States Patent and Trademark Office via the Office electronic filing system on November 30, 2023.

KILPATRICK TOWNSEND & STOCKTON LLP

By: Anthony Guebert /Anthony Guebert/

PATENT
Attorney Docket No.: 105650-1292756

IN THE UNITED STATES PATENT AND TRADEMARK OFFICE

In re Application of:

Kameshwar Durvasula et al.

Application No.: 17/572,388

Filed: January 10, 2022

For: POOL CLEANING SYSTEM AND METHOD TO AUTOMATICALLY CLEAN SURFACES OF A POOL USING IMAGES FROM A CAMERA

Customer No.: 23370

Confirmation No.: 1072

Examiner: Allen C. Wong

Art Unit: 2488

AMENDMENT AFTER ALLOWANCE UNDER 37 C.F.R. § 1.312

Mail Stop Issue Fee
Commissioner for Patents
P.O. Box 1450
Alexandria, VA 22313-1450

Commissioner:

In response to the Notice of Allowance mailed September 6, 2023, please amend the above-referenced application as follows:

Amendments to the Claims are reflected in the listing of claims, which begins on page 2 of this paper.

Remarks/Arguments begin on page 6 of this paper.

AMENDMENTS TO THE CLAIMS

This listing of claims will replace all prior versions, and listings of claims in the application.

Listing of Claims:

1.-19. (cancelled)

20. (previously presented) A self-propelled pool cleaning system for cleaning debris from a submerged surface of a swimming pool, comprising:

a. a vehicle body;

b. means for moving the vehicle body within the swimming pool;

c. a filter configured to retain debris collected from the submerged surface;

d. at least one camera for capturing an image of at least a first object within the swimming pool; and

e. a controller (i) in electronic communication with the at least one camera and (ii) configured to generate, in response to the captured image, at least one control signal to cause movement of the body within the swimming pool to, or away from, the first object.

21. (previously presented) A pool system comprising:

at least one piece of equipment for a swimming pool or spa;

one or more cameras configured to capture video or images of at least a portion of a location including the swimming pool or spa; and

a controller in communication with the at least one piece of equipment and the one or more cameras, the controller configured to receive visual data from the one or more cameras and determine a control action for the at least one piece of equipment based on the received visual data.

WYBOTICS EX1006
Wybotics v. Zodiac
Page 154

22. (previously presented) The pool system of claim 21, wherein the at least one piece of equipment comprises a cleaning device with one or more propulsion mechanisms, the cleaning device configured to travel adjacent to submerged or water-containing surfaces of the swimming pool or spa and to perform a cleaning operation.

23. (previously presented) The pool system of claim 21, wherein the one or more cameras are mounted external to the swimming pool or spa.

24. (previously presented) The pool system of claim 21, wherein the one or more cameras are mounted on the at least one piece of equipment.

25. (previously presented) The pool system of claim 21, wherein the one or more cameras are submergible or submerged within the swimming pool or spa.

26. (previously presented) The pool system of claim 21, wherein the controller is configured to detect a characteristic of the location based on the visual data and control the piece of equipment based on the detected characteristic.

27. (currently amended) The pool system of claim[[21]] 26, wherein the characteristic comprises a cleanliness of a surface of the swimming pool, and wherein the controller is configured to control the piece of equipment based on the detected cleanliness being outside of a threshold.

28. (previously presented) The pool system of claim 21, wherein the controller is configured to communicate with the at least one piece of equipment and the one or more cameras via a wireless connection.

29. (previously presented) The pool system of claim 21, wherein the controller is further configured to present a graphical depiction on a remote device based on the received visual data as the control action.

WYBOTICS EX1006
Wybotics v. Zodiac
Page 155

30. (previously presented) The pool system of claim 21, wherein the controller is remote from the camera.

31. (currently amended) A method for monitoring a pool system, the method comprising:

receiving images of at least a portion of a location including[[the]] a swimming pool or spa from one or more cameras;

determining a target area and detecting a characteristic of the target area based on the images; and

generating a control response based on the detected characteristic of the target area.

32. (previously presented) The method of claim 31, wherein the target area comprises a portion of a surface of the swimming pool or spa, and wherein the characteristic comprises a cleanliness characteristic of the portion of the surface of the swimming pool or spa.

33. (previously presented) The method of claim 31, wherein generating the control response comprises controlling an operation of a piece of equipment of the swimming pool or spa.

34. (previously presented) The method of claim 31, wherein generating the control response comprises generating an alert on a remote device.

35. (previously presented) The method of claim 31, wherein generating the control response comprises wirelessly communicating with a piece of equipment for the swimming pool or spa or a remote device.

36. (previously presented) The method of claim 31, wherein generating the control response comprises prompting a user on a remote device, and wherein the method further comprises receiving a control input from the user on the remote device for controlling a piece of equipment of the swimming pool or spa.

WYBOTICS EX1006
Wybotics v. Zodiac
Page 156

37. (previously presented) The method of claim 36, wherein prompting the user comprises providing recommended cleaning strategies for a cleaning device based on the detected characteristic of the target area.

38. (previously presented) The method of claim 31, wherein generating the control response comprises controlling operation of a cleaning device configured to travel adjacent to submerged or water-containing surfaces of the swimming pool or spa and to perform a cleaning operation, wherein controlling operation of the cleaning device comprises one or more of controlling a path or route of the cleaning device, an aggressiveness of cleaning chemicals deployed, an aggressiveness of mechanical cleaning, or a speed of the cleaning device.

39. (previously presented) The method of claim 38, wherein the characteristic of the target area is a presence of a person at the swimming pool or spa, and wherein generating the control response is based on the detected presence of the person satisfying a predefined characteristic.

WYBOTICS EX1006
Wybotics v. Zodiac
Page 157

REMARKS/ARGUMENTS

The Applicant thanks the Examiner for allowing the application.

Upon entry of the present amendment, claims 20-39 will be pending in this application. Claims 27 and 31 have been amended, and claims 1-19 were previously canceled.

Claims 27 and 31 have been amended to correct antecedent issues. Claim 27 has been amended to properly depend from claim 26 (which first introduces the "characteristic"). Claim 31 has been amended to refer to "**a** swimming pool or spa," as this is the first recitation of the phrase. No new matter is added.

CONCLUSION

Entry of this amendment is respectfully urged since no additional search is required, no more than a cursory review of the record is needed, and the amendments do not require a substantial amount of work on the part of the Office.

Except for the issue fees payable under 37 C.F.R. § 1.18, the Director is authorized to charge any additional fees during pendency of this application, including any required extension of time fees, or credit any overpayment to Deposit Account Number 20-1430. This paragraph is intended to be a constructive petition for extension of time in accordance with 37 C.F.R. § 1.136(a)(3).

If the Examiner believes a telephone conference would expedite prosecution of this application, please contact the undersigned at (404) 815-6015 or AGuebert@kilpatricktownsend.com.

Respectfully submitted,

/Anthony Guebert/
Anthony Guebert
Registration No. 70,195

KILPATRICK TOWNSEND & STOCKTON LLP

WYBOTICS EX1006
Wybotics v. Zodiac
Page 158

UNITED STATES
PATENT AND TRADEMARK OFFICE

P.O. Box 1450
Alexandria, VA 22313 - 1450
www.uspto.gov

ELECTRONIC PAYMENT RECEIPT

APPLICATION #	RECEIPT DATE / TIME	ATTORNEY DOCKET #
17/572,388	12/05/2023 03:07:26 PM Z ET	105650-1292756

Title of Invention

POOL CLEANING SYSTEM AND METHOD TO AUTOMATICALLY CLEAN SURFACES OF A POOL USING IMAGES FROM A CAMERA

Application Information

APPLICATION TYPE	Utility - Nonprovisional Application under 35 USC 111(a)	PATENT #	-
CONFIRMATION #	1072	FILED BY	Sandee Harvey-McCullough
PATENT CENTER #	63495480	AUTHORIZED BY	Anthony Guebert
CUSTOMER #	23370	FILING DATE	01/10/2022
CORRESPONDENCE ADDRESS	-	FIRST NAMED INVENTOR	Kameshwar Durvasula

Payment Information

PAYMENT METHOD	PAYMENT TRANSACTION ID	PAYMENT AUTHORIZED BY
CARD / 8485	E2023B5F12559751	Sandee Harvey-McCullough
PRE-AUTHORIZED ACCOUNT	PRE-AUTHORIZED CATEGORY	
201430	37 CFR 1.16 (National application filing, search, and examination fees); 37 CFR 1.17 (Patent application and reexamination processing fees); 37 CFR 1.19 (Document supply fees); 37 CFR 1.20 (Post issuance fees); 37 CFR 1.21 (Miscellaneous fees and charges)	

FEE CODE	DESCRIPTION	ITEM PRICE($)	QUANTITY	ITEM TOTAL($)
1501	UTILITY ISSUE FEE	1200.00	1	1200.00
			TOTAL AMOUNT:	$1,200.00

This Acknowledgement Receipt evidences receipt on the noted date by the USPTO of the indicated documents, characterized by the applicant, and including page counts, where applicable. It serves as evidence of receipt similar to a Post Card, as described in MPEP 503.

New Applications Under 35 U.S.C. 111

If a new application is being filed and the application includes the necessary components for filing date (see 37 CFR 1.53(b)-(d)

and MPEP 506), a Filing Receipt (37 CFR 1.54) will be issued in due course and the date shown on this Acknowledgement Receipt will establish the filing date of the application

National Stage of an International Application under 35 U.S.C. 371

If a timely submission to enter the national stage of an international application is compliant with the conditions of 35 U.S.C. 371 and other applicable requirements a Form PCT/DO/EO/903 indicating acceptance of the application as a national stage submission under 35 U.S.C. 371 will be issued in addition to the Filing Receipt, in due course.

New International Application Filed with the USPTO as a Receiving Office

If a new international application is being filed and the international application includes the necessary components for an international filing date (see PCT Article 11 and MPEP 1810), a Notification of the International Application Number and of the International Filing Date (Form PCT/RO/105) will be issued in due course, subject to prescriptions concerning national security, and the date shown on this Acknowledgement Receipt will establish the international filing date of the application.

UNITED STATES
PATENT AND TRADEMARK OFFICE

P.O. Box 1450
Alexandria, VA 22313 - 1450
www.uspto.gov

ELECTRONIC ACKNOWLEDGEMENT RECEIPT

APPLICATION #	RECEIPT DATE / TIME	ATTORNEY DOCKET #
17/572,388	**12/05/2023 03:07:26 PM Z ET**	**105650-1292756**

Title of Invention

POOL CLEANING SYSTEM AND METHOD TO AUTOMATICALLY CLEAN SURFACES OF A POOL USING IMAGES FROM A CAMERA

Application Information

APPLICATION TYPE	Utility - Nonprovisional Application under 35 USC 111(a)	PATENT #	-
CONFIRMATION #	1072	FILED BY	Sandee Harvey-McCullough
PATENT CENTER #	63495480	FILING DATE	01/10/2022
CUSTOMER #	23370	FIRST NAMED INVENTOR	Kameshwar Durvasula
CORRESPONDENCE ADDRESS	-	AUTHORIZED BY	Anthony Guebert

Documents

TOTAL DOCUMENTS: 1

DOCUMENT	PAGES	DESCRIPTION	SIZE (KB)
1292756_ISSUEFEE.pdf	1	Issue Fee Payment (PTO-85B)	157 KB

Digest

DOCUMENT	MESSAGE DIGEST(SHA-512)
1292756_ISSUEFEE.pdf	61D933FAA310A5CB5FABE916AEADE28241DB8CC501E8AC246DC5228CBDB503153976B1896C916FF4C6D34FAEF18238E8C1B0877E922895E23A22BD05E4DC4D2C

This Acknowledgement Receipt evidences receipt on the noted date by the USPTO of the indicated documents, characterized

by the applicant, and including page counts, where applicable. It serves as evidence of receipt similar to a Post Card, as described in MPEP 503.

New Applications Under 35 U.S.C. 111

If a new application is being filed and the application includes the necessary components for filing date (see 37 CFR 1.53(b)-(d) and MPEP 506), a Filing Receipt (37 CFR 1.54) will be issued in due course and the date shown on this Acknowledgement Receipt will establish the filing date of the application

National Stage of an International Application under 35 U.S.C. 371

If a timely submission to enter the national stage of an international application is compliant with the conditions of 35 U.S.C. 371 and other applicable requirements a Form PCT/DO/EO/903 indicating acceptance of the application as a national stage submission under 35 U.S.C. 371 will be issued in addition to the Filing Receipt, in due course.

New International Application Filed with the USPTO as a Receiving Office

If a new international application is being filed and the international application includes the necessary components for an international filing date (see PCT Article 11 and MPEP 1810), a Notification of the International Application Number and of the International Filing Date (Form PCT/RO/105) will be issued in due course, subject to prescriptions concerning national security, and the date shown on this Acknowledgement Receipt will establish the international filing date of the application.

PART B - FEE(S) TRANSMITTAL

Complete and send this form, together with applicable fee(s), by mail or fax, or via EFS-Web.

By mail, send to: Mail Stop ISSUE FEE
Commissioner for Patents
P.O. Box 1450
Alexandria, Virginia 22313-1450

By fax, send to: (571)-273-2885

INSTRUCTIONS: This form should be used for transmitting the ISSUE FEE and PUBLICATION FEE (if required). Blocks 1 through 5 should be completed where appropriate. All further correspondence will be mailed to the current correspondence address as indicated unless corrected below or directed otherwise in Block 1, by (a) specifying a new correspondence address; and/or (b) indicating a separate "FEE ADDRESS" for maintenance fee notifications. **Because electronic patent issuance may occur shortly after issue fee payment, any desired continuing application should preferably be filed prior to payment of this issue fee in order not to jeopardize copendency.**

CURRENT CORRESPONDENCE ADDRESS (Note: Use Block 1 for any change of address)

23370 7590 09/06/2023
Kilpatrick Townsend & Stockton LLP - East Coast
MAILSTOP: IP DOCKETING - 22
1100 PEACHTREE STREET
SUITE 2800
ATLANTA, GA 30309

Note: A certificate of mailing can only be used for domestic mailings of the Fee(s) Transmittal. This certificate cannot be used for any other accompanying papers. Each additional paper, such as an assignment or formal drawing, must have its own certificate of mailing or transmission.

Certificate of Mailing or Transmission

I hereby certify that this Fee(s) Transmittal is being deposited with the United States Postal Service with sufficient postage for first class mail in an envelope addressed to the Mail Stop ISSUE FEE address above, or being transmitted to the USPTO via EFS-Web or by facsimile to (571) 273-2885, on the date below.

Sandee Harvey	(Typed or printed name)
/Sandee Harvey/	(Signature)
2023-12-05	(Date)

APPLICATION NO.	FILING DATE	FIRST NAMED INVENTOR	ATTORNEY DOCKET NO.	CONFIRMATION NO.
17/572,388	01/10/2022	Kameshwar Durvasula	105650-1292756	1072

TITLE OF INVENTION: POOL CLEANING SYSTEM AND METHOD TO AUTOMATICALLY CLEAN SURFACES OF A POOL USING IMAGES FROM A CAMERA

APPLN. TYPE	ENTITY STATUS	ISSUE FEE DUE	PUBLICATION FEE DUE	PREV. PAID ISSUE FEE	TOTAL FEE(S) DUE	DATE DUE
nonprovisional	UNDISCOUNTED	$1200	$0.00	$0.00	$1200	12/06/2023

EXAMINER	ART UNIT	CLASS-SUBCLASS
WONG, ALLEN C	2488	348-114000

1. Change of correspondence address or indication of "Fee Address" (37 CFR 1.363).

☐ Change of correspondence address (or Change of Correspondence Address form PTO/AIA/122 or PTO/SB/122) attached.

☐ "Fee Address" indication (or "Fee Address" Indication form PTO/AIA/47 or PTO/SB/47; Rev 03-02 or more recent) attached. **Use of a Customer Number is required.**

2. For printing on the patent front page, list
(1) The names of up to 3 registered patent attorneys or agents OR, alternatively,
(2) The name of a single firm (having as a member a registered attorney or agent) and the names of up to 2 registered patent attorneys or agents. If no name is listed, no name will be printed.

1 Kilpatrick Townsend & Stockton LLP
2
3

3. ASSIGNEE NAME AND RESIDENCE DATA TO BE PRINTED ON THE PATENT (print or type)

PLEASE NOTE: Unless an assignee is identified below, no assignee data will appear on the patent. If an assignee is identified below, the document must have been previously recorded, or filed for recordation, as set forth in 37 CFR 3.11 and 37 CFR 3.81(a). Completion of this form is NOT a substitute for filing an assignment.

(A) NAME OF ASSIGNEE: ZODIAC POOL SYSTEMS LLC

(B) RESIDENCE: (CITY and STATE OR COUNTRY): CARLSBAD, CALIFORNIA

Please check the appropriate assignee category or categories (will not be printed on the patent) : ☐ Individual ☒ Corporation or other private group entity ☐ Government

4a. Fees submitted: ☒ Issue Fee ☐ Publication Fee (if required)

4b. Method of Payment: *(Please first reapply any previously paid fee shown above)*

☒ Electronic Payment via Patent Center or EFS-Web ☐ Enclosed check ☐ Non-electronic payment by credit card (Attach form PTO-2038)

☒ The Director is hereby authorized to charge the required fee(s), any deficiency, or credit any overpayment to Deposit Account No. 20-1430

5. **Change in Entity Status** (from status indicated above)

☐ Applicant certifying micro entity status. See 37 CFR 1.29

☐ Applicant asserting small entity status. See 37 CFR 1.27

☐ Applicant changing to regular undiscounted fee status.

NOTE: Absent a valid certification of Micro Entity Status (see forms PTO/SB/15A and 15B), issue fee payment in the micro entity amount will not be accepted at the risk of application abandonment.

NOTE: If the application was previously under micro entity status, checking this box will be taken to be a notification of loss of entitlement to micro entity status.

NOTE: Checking this box will be taken to be a notification of loss of entitlement to small or micro entity status, as applicable.

NOTE: This form must be signed in accordance with 37 CFR 1.31 and 1.33. See 37 CFR 1.4 for signature requirements and certifications.

Authorized Signature /Anthony L. Guebert/ Date 2023-12-05

Typed or printed name Anthony L. Guebert Registration No. 70195

UNITED STATES PATENT AND TRADEMARK OFFICE

UNITED STATES DEPARTMENT OF COMMERCE
United States Patent and Trademark Office
Address: COMMISSIONER FOR PATENTS
P.O. Box 1450
Alexandria, Virginia 22313-1450
www.uspto.gov

APPLICATION NO.	FILING DATE	FIRST NAMED INVENTOR	ATTORNEY DOCKET NO.	CONFIRMATION NO.
17/572,388	01/10/2022	Kameshwar Durvasula	105650-1292756	1072

23370 7590 12/15/2023
Kilpatrick Townsend & Stockton LLP - East Coast
MAILSTOP: IP DOCKETING - 22
1100 PEACHTREE STREET
SUITE 2800
ATLANTA, GA 30309

EXAMINER
WONG, ALLEN C

ART UNIT	PAPER NUMBER
2488	

NOTIFICATION DATE	DELIVERY MODE
12/15/2023	ELECTRONIC

Please find below and/or attached an Office communication concerning this application or proceeding.

The time period for reply, if any, is set in the attached communication.

Notice of the Office communication was sent electronically on above-indicated "Notification Date" to the following e-mail address(es):

KTSDocketing2@kilpatrick.foundationip.com
ipefiling@kilpatricktownsend.com

Response to Rule 312 Communication	Application No.	Applicant(s)	
	17/572,388	Durvasula et al.	
	Examiner	Art Unit	AIA (FITF) Status
	ALLEN C WONG	2488	Yes

-- The MAILING DATE of this communication appears on the cover sheet with the correspondence address --

1. ☑ The amendment filed on 30 November 2023 under 37 CFR 1.312 has been considered, and has been:

a) ☐ entered.

b) ☑ entered as directed to matters of form not affecting the scope of the invention.

c) ☐ disapproved because the amendment was filed after the payment of the issue fee.

Any amendment filed after the date the issue fee is paid must be accompanied by a petition under 37 CFR 1.313(c)(1) and the required fee to withdraw the application from issue.

d) ☐ disapproved. See explanation below.

e) ☐ entered in part. See explanation below.

f) ☐ not entered because the supplemental or corrected Application Data sheet (ADS)

☐ was not accompanied by a petition to accept an unintentionally delayed claim under 37 CFR 1.55 or 27 CFR 1.78;

☐ did not identify the information being changed in accordance with 37 CFR 1.76(c)(2);

☐ was not properly signed in accordance with 37 CFR 1.76(e) (or 37 CFR 1.33(b) for applications filed prior to September 16, 2012).

/ALLEN C WONG/
Primary Examiner, Art Unit 2488

I hereby certify that this correspondence is being filed with the United States Patent and Trademark Office via the Office electronic filing system on November 30, 2023.

KILPATRICK TOWNSEND & STOCKTON LLP

By: Anthony Guebert /Anthony Guebert/

PATENT
Attorney Docket No.: 105650-1292756

IN THE UNITED STATES PATENT AND TRADEMARK OFFICE

In re Application of:

Kameshwar Durvasula et al.

Application No.: 17/572,388

Filed: January 10, 2022

For: POOL CLEANING SYSTEM AND METHOD TO AUTOMATICALLY CLEAN SURFACES OF A POOL USING IMAGES FROM A CAMERA

Customer No.: 23370

Confirmation No.: 1072

Examiner: Allen C. Wong

Art Unit: 2488

AMENDMENT AFTER ALLOWANCE UNDER 37 C.F.R. § 1.312

Mail Stop Issue Fee
Commissioner for Patents
P.O. Box 1450
Alexandria, VA 22313-1450

OK TO ENTER: /A.W./

12/11/2023

Commissioner:

In response to the Notice of Allowance mailed September 6, 2023, please amend the above-referenced application as follows:

Amendments to the Claims are reflected in the listing of claims, which begins on page 2 of this paper.

Remarks/Arguments begin on page 6 of this paper.

UNITED STATES PATENT AND TRADEMARK OFFICE

UNITED STATES DEPARTMENT OF COMMERCE
United States Patent and Trademark Office
Address: COMMISSIONER FOR PATENTS
P.O. Box 1450
Alexandria, Virginia 22313-1450
www.uspto.gov

APPLICATION NO.	ISSUE DATE	PATENT NO.	ATTORNEY DOCKET NO.	CONFIRMATION NO.
17/572,388	01/23/2024	11880207	105650-1292756	1072

23370 7590 01/03/2024

Kilpatrick Townsend & Stockton LLP - West Coast
Mailstop: IP Docketing - 22
1100 Peachtree Street
Suite 2800
Atlanta, GA 30309

ISSUE NOTIFICATION

The projected patent number and issue date are specified above. The patent will issue electronically. The electronically issued patent is the official patent grant pursuant to 35 U.S.C. § 153. The patent may be accessed on or after the issue date through Patent Center at https://patentcenter.uspto.gov/. The patent will be available in both the public and the private sides of Patent Center. Further assistance in electronically accessing the patent, or about Patent Center, is available by calling the Patent Electronic Business Center at 1-888-217-9197.

The USPTO is implementing electronic patent issuance with a transition period, during which period the USPTO will mail a ceremonial paper copy of the electronic patent grant to the correspondence address of record. Additional copies of the patent (i.e., certified and presentation copies) may be ordered for a fee from the USPTO's Certified Copy Center at https://certifiedcopycenter.uspto.gov/index.html. The Certified Copy Center may be reached at (800)972-6382.

Determination of Patent Term Adjustment under 35 U.S.C. 154 (b)
(application filed on or after May 29, 2000)

The Patent Term Adjustment is 0 day(s). Any patent to issue from the above-identified application will include an indication of the adjustment on the front page.

If a Continued Prosecution Application (CPA) was filed in the above-identified application, the filing date that determines Patent Term Adjustment is the filing date of the most recent CPA.

Applicant will be able to obtain more detailed information by accessing the Patent Center (https://patentcenter.uspto.gov).

Any questions regarding the Patent Term Extension or Adjustment determination should be directed to the Office of Patent Legal Administration at (571)-272-7702. Questions relating to issue and publication fee payments should be directed to the Application Assistance Unit (AAU) of the Office of Patents Stakeholder Experience (OPSE), Stakeholder Support Division (SSD) at (571)-272-4200.

INVENTOR(s) (Please see PATENT CENTER site https://patentcenter.uspto.gov for additional inventors):

Kameshwar Durvasula, Garfield, NJ;
William Londono Correa, Bloomfield, NJ;

APPLICANT(s) (Please see PATENT CENTER site https://patentcenter.uspto.gov for additional applicants):

ZODIAC POOL SYSTEMS LLC, Carlsbad, CA;

The United States represents the largest, most dynamic marketplace in the world and is an unparalleled location for business investment, innovation, and commercialization of new technologies. The USA offers tremendous resources and advantages for those who invest and manufacture goods here. Through SelectUSA, our nation works to encourage and facilitate business investment. To learn more about why the USA is the best country in the world to develop technology, manufacture products, and grow your business, visit SelectUSA.gov.

UNITED STATES PATENT AND TRADEMARK OFFICE

UNITED STATES DEPARTMENT OF COMMERCE
United States Patent and Trademark Office
Address: COMMISSIONER FOR PATENTS
P.O. Box 1450
Alexandria, Virginia 22313-1450
www.uspto.gov

APPLICATION NO.	FILING DATE	FIRST NAMED INVENTOR	ATTORNEY DOCKET NO.	CONFIRMATION NO.
17/572,388	01/10/2022	Kameshwar Durvasula	105650-1292756	1072

23370 7590 01/23/2024
Kilpatrick Townsend & Stockton LLP - West Coast
Mailstop: IP Docketing - 22
1100 Peachtree Street
Suite 2800
Atlanta, GA 30309

EXAMINER
WONG, ALLEN C

ART UNIT	PAPER NUMBER
2488	

NOTIFICATION DATE	DELIVERY MODE
01/23/2024	ELECTRONIC

Please find below and/or attached an Office communication concerning this application or proceeding.

The time period for reply, if any, is set in the attached communication.

Notice of the Office communication was sent electronically on above-indicated "Notification Date" to the following e-mail address(es):

KTSDocketing2@kilpatrick.foundationip.com
ipefiling@kilpatricktownsend.com

UNITED STATES PATENT AND TRADEMARK OFFICE

UNITED STATES DEPARTMENT OF COMMERCE
United States Patent and Trademark Office
Address: COMMISSIONER FOR PATENTS
P.O. Box 1450
Alexandria, Virginia 22313-1450
www.uspto.gov

APPLICATION NO.	ISSUE DATE	PATENT NO.
17/572,388	23-Jan-2024	11880207

Kilpatrick Townsend & Stockton LLP - West Coast
Mailstop: IP Docketing - 22
1100 Peachtree Street
Atlanta, GA 30309

EGRANT NOTIFICATION

Your electronic patent grant (eGrant) is now available, which can be accessed via Patent Center at https://patentcenter.uspto.gov

The electronic patent grant is the official patent grant under 35 U.S.C. 153. For more information, please visit https://www.uspto.gov/electronicgrants