IN THE UNITED STATES PATENT AND TRADEMARK OFFICE

In the *Inter Partes* Review of U.S. Patent No. 11,262,766

Trial No.: Not Yet Assigned

Issued: March 1, 2022

Filed: January 7, 2021

Inventors: Kameshwar Durvasula, et al.

Assignee: Zodiac Pool Systems LLC

Title: POOL CLEANING SYSTEM AND METHOD TO AUTOMATICALLY CLEAN SURFACES OF A POOL USING IMAGES FROM A CAMERA

MAIL STOP PATENT BOARD
Patent Trial and Appeal Board
United States Patent & Trademark Office
P.O. Box 1450
Alexandria, Virginia 22313-1450

PETITION FOR *INTER PARTES* REVIEW
UNDER 37 C.F.R. § 42.100

On behalf of Wybotics, Co. Ltd. f/k/a Tianjin Wangyuan Environmental Protection and Technology Co., Ltd. ("Wybotics" or "Petitioner"), and in accordance with 35 U.S.C. § 311 and 37 C.F.R. § 42.100, *inter partes* review ("IPR") is respectfully requested for claims 1-5 of U.S. Patent No. 11,262,766 ("the '766 Patent").

The undersigned representative of Petitioner authorizes the Office to charge the Petition and Post-Institution Fees, and any additional fees, to Deposit Account 50-3013, ref: 103146-000007.

TABLE OF CONTENTS

Page

I. INTRODUCTION 1

II. THE '766 PATENT AND CLAIM CONSTRUCTION 4

A. Summary Of The '766 Patent 4

B. Patent Family And File History 4

C. Claim Construction And The Level Of Ordinary Skill In The Art 6

1. Claim Construction 6

2. POSA's Skill Level 7

III. REQUIREMENTS FOR IPR UNDER 37 C.F.R. § 42.104 8

A. Grounds For Standing Under 37 C.F.R. § 42.104(a) 8

B. Identification Of Challenge Under 37 C.F.R. § 42.104(b) And Relief Requested 8

IV. CLAIMS 1-5 ARE UNPATENTABLE 9

A. Ground 1a: Fu Anticipates Claims 1-4 9

1. Summary Of Fu 9

2. Claim 1 10

3. Claim 2 21

4. Independent Claim 3 22

5. Independent Claim 4 27

B. Ground 1b: Claims 1-4 Would Have Been Obvious Over Fu 28

C. Ground 1c: Claims 1-4 Would Have Been Obvious Over Fu In View Of Benzler 30

1. Summary Of Benzler 30

2. Obviousness Of The "To, Or Away From" Limitation Over Fu In View Of Benzler 31

D. Ground 1d: Claim 5 Would Have Been Obvious Over Fu In View Of Hui 34

1. Summary Of Hui 34

TABLE OF CONTENTS
(continued)

Page

2. Independent Claim 5 37

E. Ground 1e: Claim 5 Would Have Been Obvious Over Fu In View of Benzler, In Further View Of Hui 40

F. Ground 2a: Claims 1, 2, And 4 Would Have Been Obvious Over Schnittman In View Of Benzler 41

1. Summary Of Schnittman 41

2. Schnittman Is Prior Art As Of December 30, 2010 44

3. Motivation To Combine 47

4. Claim 1 51

5. Claim 2 63

6. Claim 4 63

G. Ground 2b: Claim 3 Would Have Been Obvious Over Schnittman In View Of Benzler, In Further View Of Bailey 63

1. Summary Of Bailey 63

2. Independent Claim 3 64

H. Ground 2c: Claim 5 Would Have Been Obvious Over Schnittman In View Of Benzler, In Further View Of Hui 70

1. Independent Claim 5 70

V. CONCLUSION 73

VI. MANDATORY NOTICES PURSUANT TO 37 C.F.R. § 42.8(a)(1) 73

A. 37 C.F.R. § 42.8(b)(1): Real Parties-In-Interest 73

B. 37 C.F.R. § 42.8(b)(2): Related Matters 73

C. 37 C.F.R. § 42.8(b)(3), (4): Lead And Back-Up Counsel And Service Information 74

LIST OF PETITIONER EXHIBITS

EX1001	[Reserved]
EX1002	[Reserved]
EX1003	U.S. Patent No. 11,262,766 (the "'766 Patent")
EX1004	File History of the '766 Patent
EX1005	[Reserved]
EX1006	[Reserved]
EX1007	CN 101139007 B ("Fu")
EX1008	U.S. Patent Pub. No. 2012/0169497 ("Schnittman")
EX1009	File History of U.S. Patent Application No. 16/416,840
EX1010	Declaration of Dr. Charles F. Reinholtz
EX1011	U.S. Provisional Application 61/428,808 (the "'808 provisional")
EX1012	Redline comparison between Schnittman and the '808 provisional
EX1013	U.S. Patent Pub. No. 2010/0299016 ("Benzler")
EX1014	International Patent Pub. No. 2012/023676 ("Hong")
EX1015	U.S. Patent Pub. No. 2012/0006352 ("Holappa")
EX1016	U.S. Patent No. 5,205,174 ("Silverman")
EX1017	SubjuGator 2011, University of Florida, RoboSub 2011 Competition Paper Submission
EX1018	U.S. Patent No. 8,364,309 ("Bailey")
EX1019	U.S. Patent Pub. No. 2011/0139727 ("Hui")

LIST OF PETITIONER EXHIBITS
(continued)

EX1020-1029	[Reserved]
EX1030	U.S. Patent No. 3,439,368 ("Myers II"), invented by Robert R. Myers, filed January 3, 1967
EX1031	U.S. Patent No. 5,351,355 ("Chiniara"), invented by Paul Chiniara, filed May 26, 1993

I. INTRODUCTION

This petition presents a textbook case of why Congress created *inter partes* review to improve patent quality and provide a more efficient and less expensive alternative to federal court litigation. The '766 Patent is a classic example of a "bad" patent that IPRs were designed to weed out. The Examiner performed essentially no substantive review of the prior art, issuing only one rejection for statutory double patenting that was overcome by filing a terminal disclaimer. As a result, the '766 Patent issued even though the inventions it claims are neither novel nor nonobvious in light of the prior art. The Board should institute review and find these claims unpatentable.

The '766 Patent claims a self-propelled robotic pool cleaner having certain features to detect debris and direct the motion of the pool cleaner in response to that detection. The first robotic pool cleaners were invented in the 1960s (*see*, *e.g.*, EX1030), and self-propelled robotic pool cleaners have been known since at least the early 1990s (*see*, *e.g.*, EX1031). *See* EX1010, ¶¶80-89. Most of the elements claimed by the '766 Patent—a vehicle body, a means for moving the vehicle body, and a filter configured to retain collected debris—are common to all robotic pool cleaners and have been known in the art for decades. In fact, according to the Examiner, the only purportedly novel feature of the '766 Patent is "a controller positioned on or in the body, in electronic communication with the at least one camera, and configured to

generate, in response to the captured image, at least one control signal to cause movement of the body within the swimming pool to, or away from, the first portion of the submerged surface." But that feature is not new, either. The '766 Patent is anticipated by at least Chinese Patent Application No. 200710119800.5 to Fu, entitled "Underwater Cleaning Robot," which was filed almost five years before the application that resulted in the '766 Patent. EX1003.

Fu discloses a self-propelled robotic pool cleaner having all of the elements claimed in the '766 Patent, including its purportedly novel navigation elements. In addition to the basic elements common to all pool cleaners, Fu discloses a "control system" comprised of "a central processor, monitoring cameras, an image acquisition card, inertial navigation components, … motor drivers, a control system box 8, cleaning driving wheel DC motors 7," and other elements. EX1007, ¶ [0024]. "The monitoring cameras 2 and the image acquisition card constitute the ***environmental perception layer*** of the control system." *Id.* (emphasis added). The "inertial navigation components are installed in the robot control system box 8 and constitute the ***self-attitude and positioning*** layer of the control system." *Id.* (emphasis added). The "motor drivers and cleaning driving wheel DC motors 7 constitute the cleaning driving ***execution layer*** of the control system." *Id.* (emphasis added). When the robot is operated in its "autonomous mode, control signals are generated by the central processor, which autonomously plans paths and actions based on information from

the environmental perception layer and its own attitude and positioning layer, in conjunction with a preset cleaning task, to drive the robot's execution layer and complete the underwater cleaning task." *Id.*, ¶[0025]. These disclosures fully anticipate the navigation elements of the '766 Patent—a controller and an image captured by a camera that cooperate to generate at least one control signal to cause movement of the body to, or away from, a certain location—the only aspect of the patent asserted as novel.

Further, even if the Board determines Fu does not anticipate all the claims of the '766 Patent, the claims are obvious in light of Fu itself or in combination with U.S. Patent Pub. No. 20100299016 to Benzler. The claims are also obvious over U.S. Patent Pub. No. 20120169497 to Schnittman, in combination with Benzler. Both Benzler and Schnittman disclose robotic vehicles that use image-based navigation to autonomously control movement of the vehicle. And Benzler teaches that a preferred embodiment for its vehicle is a "pool-robotic vehicle." The POSA designing a pool-cleaning robot at the time of the alleged invention would have looked to pool-cleaning literature, like Fu and Benzler, and would have been motivated to consider Schnittman and Benzler together because they describe similar technology (*e.g.*, autonomous cleaning robots that employ computer vision) and address the same problem of enabling a robot to make cleaning and navigation decisions based on an image of the cleaning surface.

The Board should cancel claims 1-5 of the ’766 Patent.

II. THE ’766 PATENT AND CLAIM CONSTRUCTION

A. Summary Of The ’766 Patent

The ’766 Patent, entitled “Pool Cleaning System and Method to Automatically Clean Surfaces of a Pool Using Images from a Camera,” issued with five total claims, each independent. EX1003, (54), claims 1-5. The claims are directed generally to a self-propelled swimming pool cleaner that uses an image captured by a camera to control the pool cleaner. *Id*., claims 1-5.

The ’766 Patent generally relates to “a robotic pool cleaner” that comprises a vehicle 30 with one or more propulsion mechanisms, a filter, a camera, and a controller. *Id*., 3:1-19, 3:31-43. Vehicle 30 uses propulsion mechanisms, such as “wheels, rollers, tracks, or other surface contacting members powered by a motor,” to move along the submerged surfaces of the pool. *Id*., 3:31-43. Using its filter, the pool cleaner draws water from the pool and retains any debris present in the water. *Id*., 3:9-14. One or more cameras 32 capture an image of submerged surfaces of the pool. *Id*., 3:46-55. Controller 42 “generate[s] control signals for steering vehicle 30 based upon signals received from cameras 32.” *Id*., 3:51-53, 4:44-46.

B. Patent Family And File History

The ’766 Patent was filed on Jan. 7, 2021 as U.S. Patent Application No. 17/143,624. *Id*., (21), (22). The ’766 Patent is sixth in a series of continuation

applications claiming priority to U.S. Patent Application No. 13/545,918 (now U.S. Patent No. 9,388,595), filed July 10, 2012. *Id*., (63). Without conceding its propriety, Petitioner applies July 10, 2012 as the priority date.

Originally filed claims 1-19 were copies of claims filed in a parent application, U.S. Patent Application No. 16/416,840 (the "'840 application"). *Compare* EX1004, 17-19 *with* EX1009, 17-19. Prior to examination, the applicant filed a preliminary amendment, canceling claims 1-19 and adding new claims 20-24, which have since issued as claims 1-5 of the '766 Patent. EX1004, 38-42.

No prior art rejections were issued against the claims. The sole Office Action contained only a nonstatutory double patenting rejection that was overcome via a terminal disclaimer. *Id*., 70-86, 116-118. The Notice of Allowance identified claim 1's "controller" limitation as allegedly inventive. *Id*., 133-137 (also identifying the "controller" limitations of claims 2-5 as allegedly inventive).

But this Petition clearly shows that the purportedly inventive feature asserted by the Examiner was very well known in the art. *See infra* Sections IV.A.2.f-h, IV.F.4.f-h. The Office failed to conduct a meaningful substantive examination of the '766 Patent; the application was filed as a continuation in a long series of allowed continuations, and the Examiner issued only a nonstatutory double patenting rejection without vetting the claims against relevant prior art. Had the Office conducted a complete examination, the '766 Patent would not have issued.

C. Claim Construction And The Level Of Ordinary Skill In The Art

1. Claim Construction

In this proceeding, claims are interpreted under the same standard applied by Article III courts. *See* 37 C.F.R. § 42.100(b); *see also* 83 Fed. Reg. 197 (Oct. 11, 2018); *Phillips v. AWH Corp.*, 415 F.3d 1303, 1312 (Fed. Cir. 2005) (en banc). Under this standard, words in a claim are given their plain meaning, which is the meaning understood by a person of ordinary skill in the art (POSA) in view of the patent and file history. *Phillips*, 415 F.3d at 1312-13. Other than the "means-plus-function" claim term discussed below, Petitioner proposes no claim terms for construction.

"Where the claim to be construed contains a means-plus-function … limitation as permitted under 35 U.S.C. 112(f), the construction of the claim must identify the specific portions of the specification that describe the structure, material, or acts corresponding to each claimed function." 37 C.F.R. § 42.104(b)(3). The term "means for moving the vehicle body within the swimming pool," as recited in claims 1-5, is a means-plus-function (MPF) term governed by 35 U.S.C. § 112(f). In accordance with 37 C.F.R. § 42.104(b)(3), Petitioner identifies specific portions of the specification that describe the structure and functions for this term:

Claim Limitation	**Corresponding Structure**	**Function**

[1b], [2b], [3b], [4b], [5b] means for moving the vehicle body within the swimming pool	"In one implementation, vehicle 30 is propelled along the submerged pool surfaces using ***wheels, rollers, tracks or other surface contacting members powered by a motor and the like***. … In one implementation vehicle 30 may also alternatively be propelled by means of the ***vacuum or liquid jets***. … In other implementations, vehicle 30 may include other propulsion mechanisms." EX1003, 3:32-43.	Moving the vehicle body within the swimming pool EX1003, claims 1-5.

Thus, the corresponding structures disclosed for "means for moving" include "wheels, rollers, tracks or other surface contacting members powered by a motor and the like" and "vacuum or liquid jets." EX1003, 3:31-43; *see also id.,* 10:8-28 (describing drive motor, "toothed track drive 900" and rollers 908 of Figs. 9 and 10).

2. POSA's Skill Level

A POSA as of July 10, 2012 would have possessed a bachelor's degree in mechanical or electrical engineering or a related field, and two years' experience in designing and developing robotic pool cleaners or similar products, with additional experience substituting for education and vice versa. EX1010, ¶¶30-34.

III. REQUIREMENTS FOR IPR UNDER 37 C.F.R. § 42.104

A. Grounds For Standing Under 37 C.F.R. § 42.104(a)

Wybotics certifies that the '766 Patent is eligible for IPR, and that Wybotics is not barred or estopped from requesting IPR of claims 1-5 on the challenged grounds.

B. Identification Of Challenge Under 37 C.F.R. § 42.104(b) And Relief Requested

Wybotics requests IPR on the following grounds:

Ground	Claims	Basis
Ground 1a	1-4	Fu (EX1007, CN 101139007 B) anticipates under § 102
Ground 1b	1-4	Fu renders obvious under § 103
Ground 1c	1-4	Fu in view of Benzler (EX1013, U.S. Patent Pub. No. 2010/0299016) renders obvious under § 103
Ground 1d	5	Fu in view of Hui (EX1019, U.S. Patent Pub. No. 2011/0139727) renders obvious under § 103
Ground 1e	5	Fu in view of Benzler further in view of Hui renders obvious under § 103
Ground 2a	1, 2, 4	Schnittman (EX1008, U.S. Patent Pub. No. 20120169497) in view of Benzler renders obvious under § 103
Ground 2b	3	Schnittman in view of Benzler further in view of Bailey (EX1018, U.S. Patent No. 8,364,309) renders obvious under § 103
Ground 2c	5	Schnittman in view of Benzler further in view of Hui renders obvious under § 103

IV. CLAIMS 1-5 ARE UNPATENTABLE

A. Ground 1a: Fu Anticipates Claims 1-4

1. Summary Of Fu

Fu, entitled "Underwater Cleaning Robot," was filed on July 31, 2007 as Application No. 200710119800.5 in China. EX1007, (19), (21), (22). Fu issued as Grant Publication No. CN 101139007 B, and published on June 15, 2011. *Id*., (10), (45). Fu is therefore prior art under at least pre-AIA 35 U.S.C. §§ 102(a) and (b).

Fu describes a robot designed "for the underwater cleaning of swimming pool floors and walls." *Id*., Abstract.

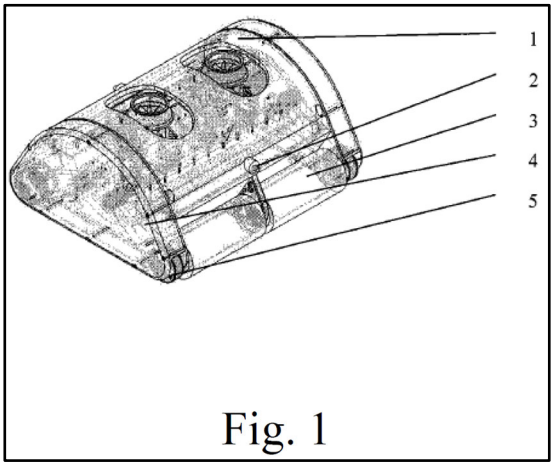

Fig. 1

Id., Fig. 1. The underwater cleaning robot has two operational modes: (i) manual mode, where a control keypad is used to send control signals to the robot; and (ii) autonomous mode, where the control system controls the robot's operations based on an image received from cameras. *Id*., ¶[0025].

The robot "comprises a drainage mechanism, a cleaning and mobility platform, and a control system." *Id*., ¶[0024]. These three units coordinate to

"perform cleaning tasks autonomously or via remote control underwater on horizontal, vertical, and inclined surfaces." *Id*., Abstract. The drainage mechanism filters pool water by drawing in water, filtering it to remove any debris, and discharging the filtered water into the pool. *Id*., ¶¶[0024]-[0026]. The cleaning and mobility platform provides structural support and propulsion to the robot, while also performing "brush-cleaning" of the pool surface via cleaning driving wheels 3. *Id*. The control system autonomously controls the robot's operations by generating control signals based on an image received from monitoring cameras 2, that are installed on the robot's housing. *Id.*

2. Claim 1

(a) Preamble: "A self-propelled pool cleaner for cleaning debris from a submerged surface of a swimming pool, comprising:"

To the extent limiting, claim 1's preamble is disclosed by Fu. EX1010, ¶¶225-228. Fu discloses "an underwater cleaning robot" designed "for the underwater cleaning of swimming pool floors and walls." EX1007, Abstract.

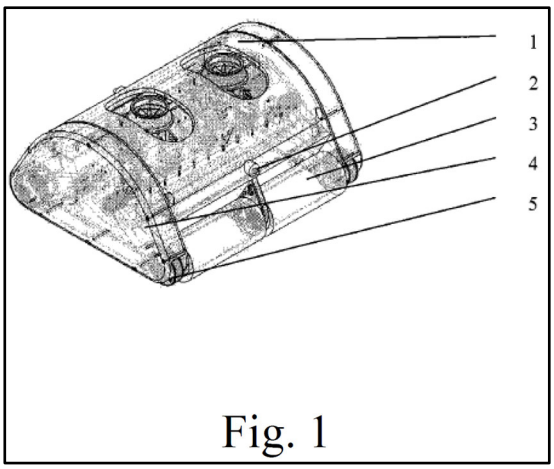

Fig. 1

Id., Fig. 1 (underwater cleaning robot). Fu's robot comprises "a drainage mechanism [and] a cleaning and mobility platform." *Id.*, ¶[0024]. The cleaning and mobility platform enables the robot to move around the pool and remove debris from its surfaces, *e.g.*, using brushes. *Id.*, ¶¶[0010], [0024]-[0026] ("brush-cleaning"). The drainage mechanism "draws pool water from the bottom of the robot" such that the "water passes through the water flow filter screen 23, which filters out debris, and the clean water is then discharged." *Id.*, ¶[0026]. Thus, Fu's underwater cleaning robot is a "pool cleaner for cleaning debris from a submerged surface of a swimming pool."

Fu's robot is also self-propelled. The robot's cleaning and mobility platform comprises "four independent cleaning driving wheels 3" that "are controlled by their respective motor drivers, allowing for independent movement." *Id.*, ¶[0026]. In the autonomous mode, "control signals are generated by the central processor, which autonomously plans paths and actions … to drive the robot's execution layer and

complete the underwater cleaning task." *Id.*, ¶[0025]. The execution layer comprises motor drivers and cleaning driving wheel DC motors 7, which drive cleaning driving wheels 3. *Id.*, ¶[0024]. Fu's robot is thus "self-propelled" because it moves without external propulsion. Fu also describes various components for powering such movement, including an onboard "rechargeable battery box." *Id.*, ¶¶[0007], [0008], [0024], [0025].

Thus, Fu discloses a "self-propelled pool cleaner [underwater cleaning robot] for cleaning debris from a submerged surface of a swimming pool."

(b) Element 1a: "a vehicle body;"

Fu discloses element 1a. EX1010, ¶¶229-231. Figure 1 illustrates "[o]verall schematic diagram of the underwater cleaning robot," including "1 - robot housing body" (EX1007, ¶[0014]):

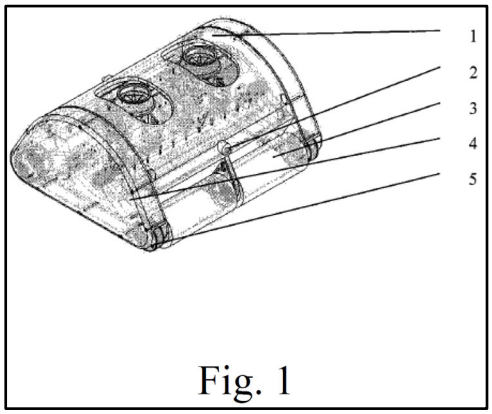

Fig. 1

Id., Fig. 1. The "housing body 1 comprises a robot top cover 18, robot side walls 20, and a robot main housing body 19." *Id.*, ¶[0024].

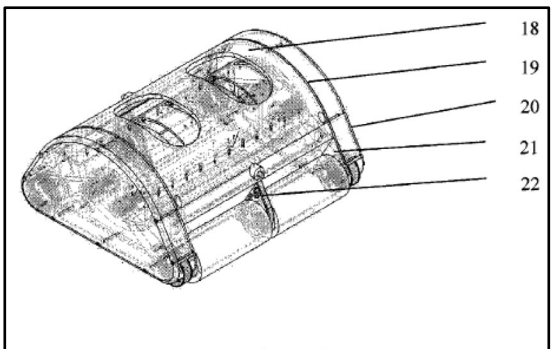

Fig. 4

Id., Fig. 4. Accordingly, Fu discloses "a vehicle body [robot housing body 1]."

(c) Element 1b: "means for moving the vehicle body within the swimming pool;"

Fu discloses element 1b. EX1010, ¶¶232-235. The term "means for moving the vehicle body within the swimming pool" is an MPF term, whose corresponding structures include "wheels, rollers, tracks or other surface contacting members powered by a motor and the like." EX1003, 3:31-43; Section II.C.1.

Fu's robot comprises a cleaning and mobility platform that enables controlled movement of the robot body. EX1007, ¶[0024]. The cleaning and mobility platform, illustrated in Figure 1, comprises "a robot housing body 1, cleaning driving wheels 3, synchronous belt gears 5, and a driving synchronous belt 4." *Id.* A driving DC motor 7 drives cleaning driving wheels 3 via synchronous belt gears 5 and driving synchronous belt 4. *Id*., ¶¶[0007],[0024] ("Said cleaning driving wheel DC motors [7] are equipped with reduction gearboxes and encoders. They are installed and fixed via front flanges to the side wall of the driving and control sealed housing and the side wall of the robot main housing body [19], and they drive the cleaning

driving wheels [3] via synchronous belt gears [5] and synchronous belts [4].”).

Further, cleaning driving wheels 3 “are controlled by their respective motor drivers, allowing for independent movement.” *Id.*, ¶[0026]. “By using different combinations of wheel speeds, the robot can perform tasks such as moving forward, backward, turning, and brush-cleaning.” *Id*, ¶[0026].

Thus, Fu teaches “means for moving the vehicle body within the swimming pool [driving wheels 3 powered by cleaning driving wheel DC motors 7].”

(d) Element 1c: “a filter configured to retain debris collected from the submerged surface;”

Fu discloses element 1c. EX1010, ¶¶236-239. Fu’s robot includes a “drainage mechanism” designed to draw in pool water, filter out debris from the water, and discharge the filtered water while retaining the debris. EX1007, ¶¶[0024]-[0026]. Figures 3 and 5 illustrate an example schematic of the drainage mechanism:

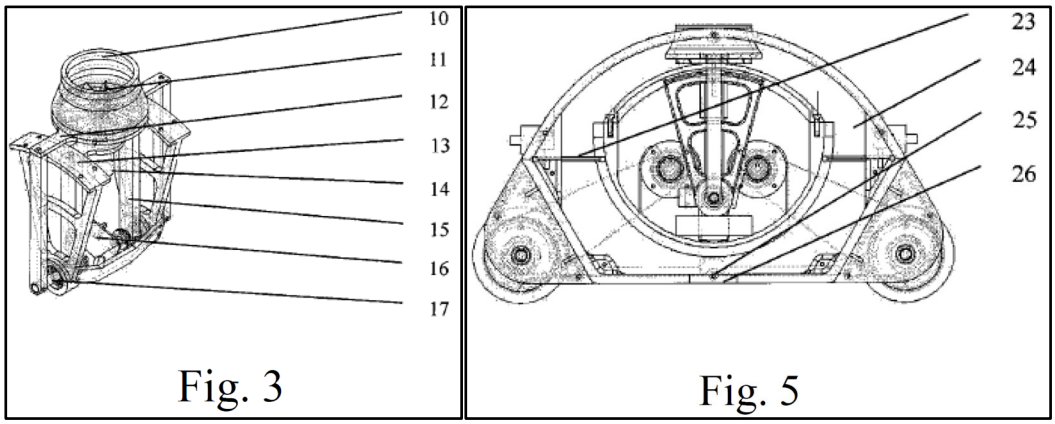

Id., Fig. 3 (water discharger), Fig. 5 (robot side cross-sectional view).

The drainage mechanism "comprises a water discharger, a water flow channel 24 …, a water flow filter screen 23, and a water inlet [26] with an anti-backflow device 25." *Id*, ¶[0024]. During operation, "the drainage propeller high-speed DC motor 14 … drives the drainage propeller 11 to rotate … expel[ling] water from within the robot's water flow channel 24, creating a high negative pressure inside." *Id.*, ¶[0026]. This negative pressure "draws pool water from the bottom of the robot into the water flow channel 24 through the water inlet [26]." *Id*. Once in flow channel 24, the "water passes through the water flow filter screen 23, which filters out debris, and the clean water is then discharged." *Id*.

The drainage mechanism also retains the debris that is filtered out from the water. "An anti-backflow device 25 is installed above the water inlet 26," which opens "[w]hen water flows in through the inlet," and closes "[w]hen the water flow stops," thus "prevent[ing] debris from flowing out of the water flow channel 24." *Id*. Thus, the debris is retained within water flow channel 24. Fu also describes that "[w]hen the debris [inside flow channel 24] reaches a certain density, [the robot] issues a 'debris full' alarm," further confirming that the drainage mechanism retains the debris. *Id*.

Thus, Fu discloses "a filter [filter screen 23 of Fu's drainage mechanism] configured to retain debris collected from the submerged surface."

(e) Element 1d: "at least one camera mounted directly or indirectly to the body for capturing an image of at least a first portion of the submerged surface; and"

Fu discloses element 1d. EX1010, ¶¶240-242. Fu's robot comprises "2 – monitoring camera":

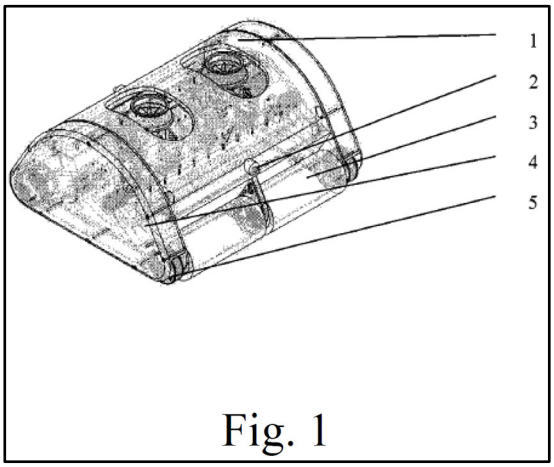

Fig. 1

EX1007, ¶[0014], Fig. 1. "Said monitoring cameras 2 are installed on the two front panels of the robot main housing body," such that cameras 2 are "mounted directly or indirectly to the body". *Id.*, ¶[0024]. The robot "uses its monitoring cameras 2 to capture images of the pool floor," which is the "submerged surface." *Id.*, ¶[0026].

Therefore, Fu discloses "at least one camera [monitoring cameras 2] mounted directly or indirectly to the body [robot housing body 1] for capturing an image of at least a first portion of the submerged surface [pool floor]."

(f) Element 1e: "a controller (i) positioned on or in the body,"

Fu discloses element 1e. EX1010, ¶¶243-246. Fu discloses a control system comprising "a central processor, monitoring cameras, an image acquisition card, …

motor drivers, … [and] cleaning driving wheel DC motors 7," all encapsulated within a "control system box 8." EX1007, ¶[0024].

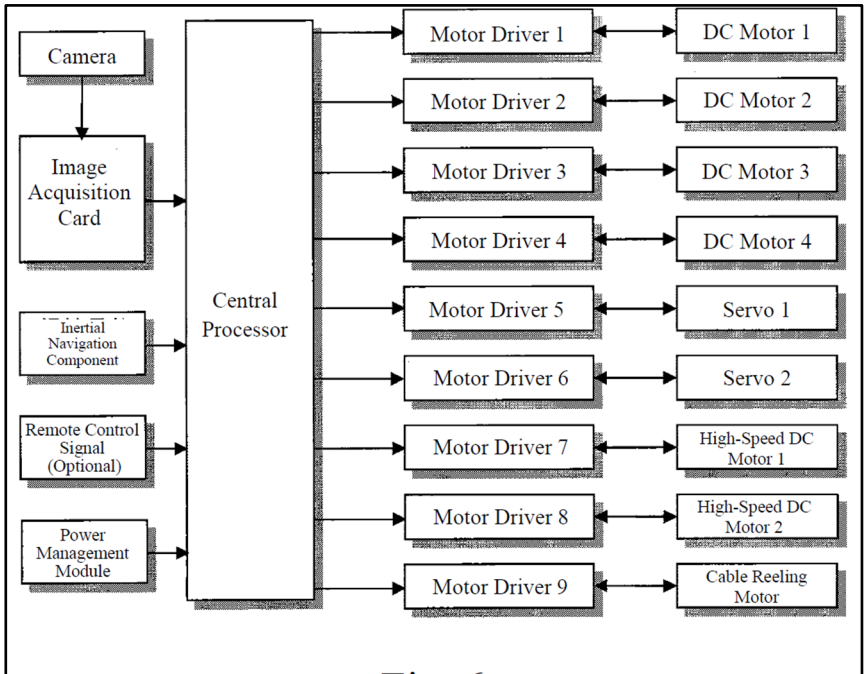

Fig. 6

Id., Fig. 6. "The underwater cleaning robot controls its actions according to control commands issued by the central processor." *Id.*, ¶¶[0010], [0026].

Control system box 8 "is fixed to the bottom of the driving and control sealed housing [6]," which is within the robot housing body 1, as shown in Figure 2:

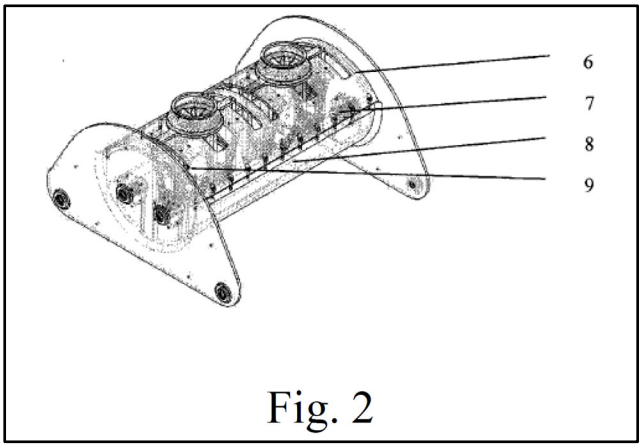

Fig. 2

Id., ¶[0024], Fig. 2. Therefore, Fu's control system, comprising the central processor that generates control signals for controlling the robot, teaches "a controller" "positioned on or in the body [robot housing body 1]." *Id.*, ¶[0026].

(g) Element 1f: "[the controller] (ii) in electronic communication with the at least one camera, and"

Fu discloses element 1f. EX1010, ¶247. "[T]he monitoring cameras (2) are connected to the central processor via the image acquisition card." EX1007, Fig. 6, claim 1.

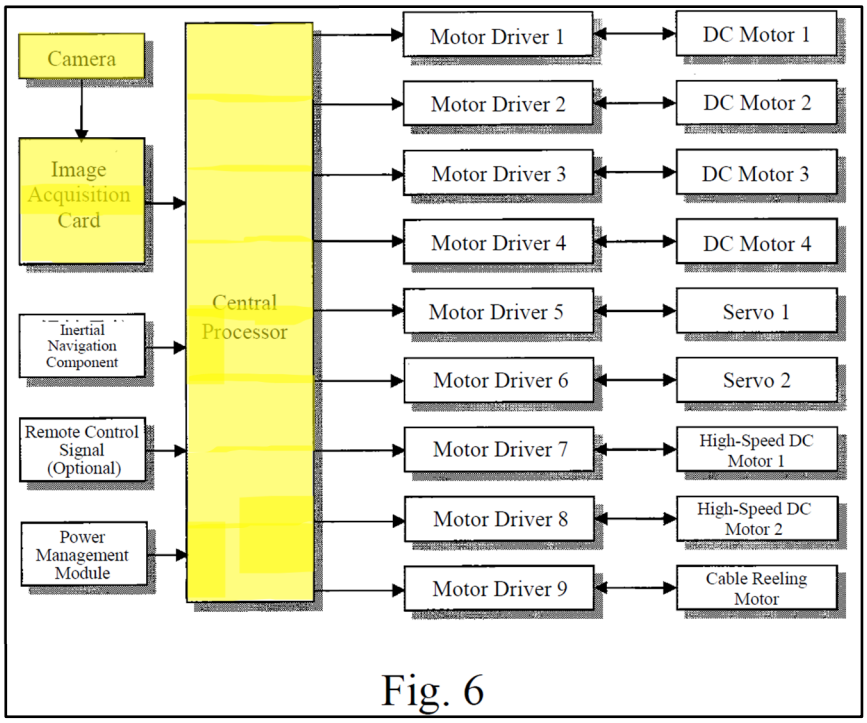

Id., Fig. 6 (annotated). The image acquisition card serves as an electronic interface that transmits an image from monitoring cameras 2 to the central processor for processing, such that the controller (control system with central processor) is "in electronic communication with the at least one camera [monitoring cameras 2]."

EX1010, ¶247.

(h) Element 1g: "[the controller] (iii) configured to generate, in response to the captured image, at least one control signal to cause movement of the body within the swimming pool to, or away from, the first portion of the submerged surface."

Fu discloses element 1g. *Id.*, ¶¶248-252. Fu explains that "[t]he monitoring cameras 2 and the image acquisition card constitute the environmental perception layer of the control system," which "constitutes the input part of the control system." EX1007, ¶[0024]. "[I]nformation from the environmental perception layer," *i.e.*, image captured by monitoring cameras 2, is expressly identified as the basis upon which "control signals are generated by the central processor … to drive the robot[]" in the autonomous mode. *Id.*, ¶[0025].

As shown in Figure 6, the central processor receives the image captured by cameras 2 via the image acquisition card. *Id.*, claim 1, Fig. 6. Based on the captured image, "control signals are generated by the central processor, which autonomously plans paths and actions … to drive the robot's execution layer [*i.e.*, motor drivers that drive wheels 3] and complete the underwater cleaning task." *Id.*, ¶[0025].

Fu further describes this process in detail:

> During the autonomous cleaning process, a pool cleanliness image threshold is set. The robot uses its monitoring cameras 2 to capture images of the pool floor and compares them with the threshold to determine the level of cleanliness. It then plans its cleaning movements and adjusts the working state of the four cleaning driving wheels 3 and the water discharger to complete the cleaning task. Specifically, the

> speed of each wheel 3 can be adjusted. By using different combinations of wheel speeds, cleaning actions of varying intensity can be achieved. For example, if the front wheels rotate quickly clockwise and the rear wheels rotate slowly counter-clockwise, the underwater cleaning robot will advance in the direction determined by the clockwise rotation of the front wheels.

EX1007, ¶[0026].

Fu also explains that "[b]y using different combinations of wheel speeds, the robot can perform tasks such as moving forward, backward, [and] turning," thus confirming that the generated signals cause the robot to move "to, or away from" a pictured region based on the cleanliness determination. *Id.*

Thus, Fu's central processor receives the image captured by cameras 2 to assess the "level of cleanliness" of the pictured region *Id.*, ¶¶[0024]-[0026]. Based on that assessment, the central processor "plans its cleaning movements and adjusts the working state of the four cleaning driving wheels 3" to "perform tasks such as moving forward, backward, [and] turning." *Id.*, ¶[0026]. A POSA would have recognized that any robot movement would necessarily be "to, or away from, the first portion" captured by Fu's cameras 2. EX1010, ¶¶251-252.

Further, as Dr. Reinholtz explains, because the central processor generates control signals in response to the "level of cleanliness" of a pictured region, and those signals drive movement in "forward, backward, [or] turning" directions, a POSA would have understood that the controller directs the robot toward regions

assessed as falling below the "pool cleanliness image threshold" and away from regions assessed as falling above. *Id.*

Thus, Fu discloses discloses the controller (control system with central processor) "configured to generate, in response to the captured image, at least one control signal to cause movement of the body within the swimming pool to, or away from, the first portion of the submerged surface."

Fu anticipates claim 1. *Id.*, ¶¶224-253.

3. Claim 2

Claim 2 is anticipated by Fu for the reasons explained for claim 1. *Id.*, ¶¶254-255. Claim 2 recites all the limitations of claim 1, with the only difference being that claim 2 recites "at least one camera carried by the body," whereas claim 1 recites "at least one camera mounted directly or indirectly to the body":

> ~~1~~2. A self-propelled pool cleaner for cleaning debris from a submerged surface of a swimming pool, comprising:
>
> a. a vehicle body;
>
> b. means for moving the vehicle body within the swimming pool;
>
> c. a filter configured to retain debris collected from the submerged surface;
>
> d. at least one camera ~~mounted directly or indirectly to~~carried by the body for capturing an image of at least a first portion of the submerged surface; and
>
> e. a controller (i) positioned on or in the body, (ii) in electronic communication with the at least one camera, and (iii) configured to

> generate, in response to the captured image, at least one control signal to cause movement of the body within the swimming pool to, or away from, the first portion of the submerged surface.

These limitations are substantially the same, differing only in wording. A camera that is "mounted directly or indirectly to the body" is, by definition, "carried by the body." Thus, Fu anticipates claim 2. *Id.*, ¶¶254-255.

4. Independent Claim 3

Claim 3 is anticipated by Fu. *Id.*, ¶¶256-257. The preamble and elements 3a-3c of claim 3 are the same as the preamble and elements 1a-1c of claim 1:

> ~~1~~3. A self-propelled pool cleaner for cleaning debris from a submerged surface of a swimming pool, comprising:
>
> a. a vehicle body;
>
> b. means for moving the vehicle body within the swimming pool;
>
> c. a filter configured to retain debris collected from the submerged surface;
>
> d. at least one camera ~~mounted directly or indirectly to~~positioned on or in, or carried by, the body for capturing an image of at least a first portion of the submerged surface; and
>
> e. a controller (i) positioned on or in the body, (ii) in electronic communication with the at least one camera and a portable electronic device, and (iii) configured to generate, in response to at least one of the captured image or information from the portable electronic device, at least one control signal to cause movement of the body within the swimming pool to, or away from, the first portion of the submerged surface.

Similarly, element 3d is substantially the same as element 1d, differing only in

wording. A camera that is "mounted directly or indirectly to the body" is, by definition, "positioned on or in, or carried by the body." Therefore, the preamble and elements 3a-3d are disclosed by Fu for the reasons explained for claim 1.

(a) Element 3e: "a controller (i) positioned on or in the body,"

Fu discloses element 3e for the reasons explained for element 1e. Section IV.A.2.f; EX1010, ¶258.

(b) Element 3f: "[the controller] (ii) in electronic communication with the at least one camera and a portable electronic device, and"

Fu discloses element 3f. *Id.*, ¶¶259-266. As explained for element 1f, Fu discloses that the controller (control system with central processor) is "in electronic communication with the at least one camera [monitoring cameras 2]." Section IV.A.2.g.

Additionally, Fu teaches a "portable electronic device." In the manual mode, "control signals are issued by manual operation of a control keypad [31] and [these signals] control the underwater cleaning robot directly or indirectly via the control signal floating antenna [27]." EX1007, ¶¶[0008], [0025]. Figures 7 and 8 show an example control keypad 31 as a remote, external unit that is untethered to the robot, underscoring that it is a separate, portable electronic device:

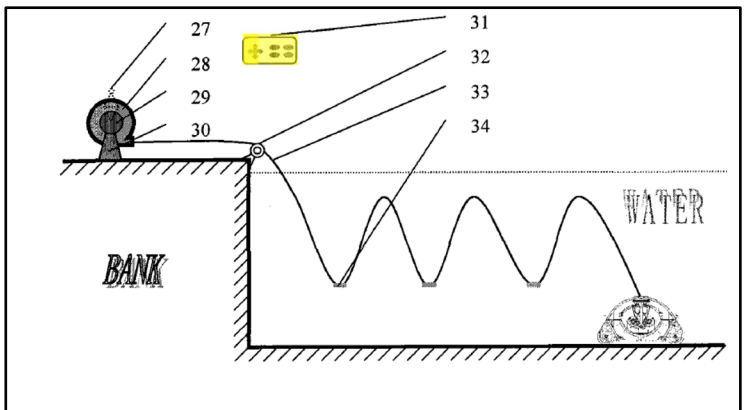

Fig. 7

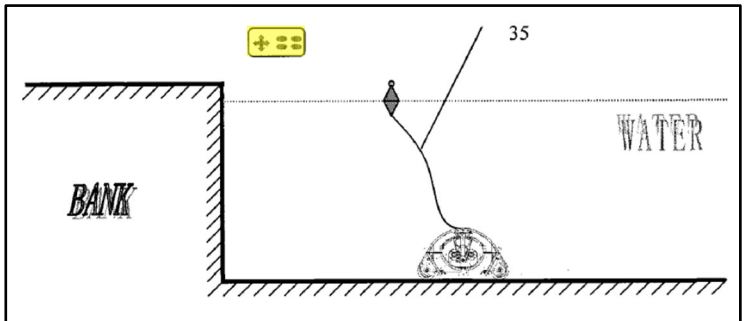

Fig. 8

Id., Figs. 7, 8 (annotated). These figures also show that control keypad 31 includes various buttons for user input for controlling the robot.

Fu further explains that control signal floating antenna 27 "communicate[s] wirelessly with the control keypad 31" to receive the control signals. *Id*., ¶¶[0007], [0024]. Antenna 27 then transmits those signals to the central processor via the remote control signal interface. *Id*., ¶¶[0007], [0008], [0024]-[0025].

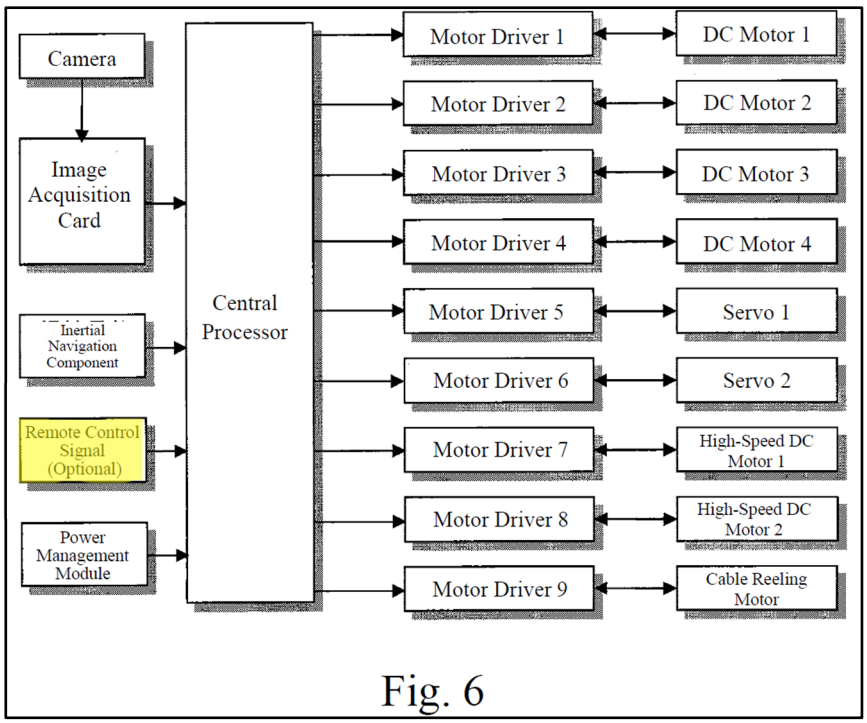

Fig. 6

Id., Fig. 6 (annotated). In one embodiment, where the robot performs "long-duration, global cleaning" (Figure 7), antenna 27 transmits the control signals from control keypad 31 to the remote control signal interface via signal and power cable 33. *Id.*, ¶¶[0007], [0008], [0024]-[0025]. In another embodiment, where the robot performs "short-duration, local cleaning" (Figure 8), antenna 27 transmits the control signals from control keypad 31 to the remote control signal interface via control signal floating antenna cable 35. *Id.*

In sum, remote control keypad 31 sends electronic control signals to antenna 27, which relays those signals, via cable 33 or cable 35, to the remote control signal interface, which relays those signals to the central processor of the control system. *Id.*.

Fu further reinforces that its control system can interface with various types of portable electronic devices. For example, Fu discloses that "the signal relay and cable manager 28 can be connected to an external display device to show the working status and relevant performance indicators of the underwater cleaning robot," thus confirming that Fu contemplates various types of portable electronic devices, including display devices. *Id*., ¶[0024].

Therefore, Fu's controller (control system with central processor) is "in electronic communication with the at least one camera [monitoring cameras 2] and a portable electronic device [control keypad 31]." EX1010, ¶¶259-266.

(c) Element 3g: "[the controller] (iii) configured to generate, in response to at least one of the captured image or information from the portable electronic device, at least one control signal to cause movement of the body within the swimming pool to, or away from, the first portion of the submerged surface."

Fu discloses element 3g. *Id.*, ¶¶267-269. As explained for element 1g, Fu's controller (control system with central processor) is "configured to generate, in response to … the captured image …, at least one control signal to cause movement of the body within the swimming pool to, or away from, the first portion of the submerged surface." Section IV.A.2.h.

Additionally, as explained for element 3f, in the manual cleaning mode, control signals, *i.e.*, "information," issued by the portable electronic device (control keypad 31) are relayed to the central processor that directs the robot's operations

based on those signals. Section IV.A.4.b; Section IV.A.2.h.

Therefore, Fu discloses the controller (control system with central processor) "configured to generate, in response to at least one of the captured image [image captured by monitoring cameras 2] or information from the portable electronic device [control signals from control keypad 31], at least one control signal to cause movement of the body [robot housing body 1] within the swimming pool to, or away from, the first portion of the submerged surface."

Thus, Fu anticipates claim 3. EX1010, ¶¶256-270.

5. Independent Claim 4

Claim 4 is anticipated by Fu for the reasons explained for claim 1. *Id.*, ¶¶271-273. Claim 4 recites all the limitations of claim 1, but claim 4 is broader because it does not require the "at least one camera" to be "mounted directly or indirectly to the body" as claim 1 does:

> ~~1~~4. A self-propelled pool cleaner for cleaning debris from a submerged surface of a swimming pool, comprising:
>
> a. a vehicle body;
>
> b. means for moving the vehicle body within the swimming pool;
>
> c. a filter configured to retain debris collected from the submerged surface;
>
> d. at least one camera ~~mounted directly or indirectly to the body~~ for capturing an image of at least a first portion of the submerged surface; and

> e. a controller (i) positioned on or in the body, (ii) in electronic communication with the at least one camera, and (iii) configured to generate, in response to the captured image, at least one control signal to cause movement of the body within the swimming pool to, or away from, the first portion of the submerged surface.

Because Fu anticipates the narrower claim 1, Fu likewise anticipates the broader claim 4.

Thus, Fu anticipates claim 4. *Id.*, ¶¶271-273.

B. Ground 1b: Claims 1-4 Would Have Been Obvious Over Fu

Fu anticipates claims 1-4. *See* Section IV.A. However, to the extent the Board finds that Fu does not anticipate claims 1-4 for allegedly lacking at least one control signal that causes movement of the vehicle body "to, or away from, the first portion of the submerged surface,"[1] Fu nevertheless would have rendered obvious these claims. EX1010, ¶¶274-277.

---

[1] As explained in Section IV.A.2.h, such a finding would be erroneous because claims 1-4 encompass any control signal generated in response to a captured image that causes movement of the vehicle body: Once the camera captures an image of a portion of the submerged surface, the vehicle occupies some finite position relative to that portion. *Any* movement commanded by the control signal—whether forward, backward, laterally, vertically, or along any trajectory—will necessarily decrease or increase the distance between the vehicle body and that imaged portion, *i.e.*, it will be movement "to, or away from" that portion. EX1010, ¶¶248-253. Because Fu discloses the generation of a control signal in response to the captured image that causes movement of the vehicle body, it necessarily discloses element 1g and the corresponding features of claims 2-4. *Id.*, ¶¶248-253, 274-277.

Fu already teaches acquiring an image of submerged pool surfaces, comparing the image to a cleanliness image threshold, and "plan[ning] … cleaning movements" and "adjust[ing] the working state of the four cleaning drive wheels 3 … to complete the cleaning task" based on this comparison. EX1007, ¶[0026]. A POSA would have found it obvious to implement motion control in Fu to direct the cleaning robot (i) toward image-identified dirty regions (*i.e.*, regions below Fu's cleanliness threshold), and (ii) away from clean regions (*i.e.*, regions above the threshold). EX1010, ¶275. Once Fu distinguishes areas as sub-threshold versus above-threshold, using that information to guide the robot towards dirtier areas and away from cleaner areas would have been a routine, predictable application obvious to a POSA. *Id.*

A POSA would have been motivated to do so because this would improve cleaning efficiency and task completion time. *Id.*, ¶276. The resulting behavior—spending more time in dirtier areas and less in cleaner areas—would have been the expected and desirable outcome. *Id.* Likewise, implementing this control behavior in Fu would have required no more than routine software configuration within a POSA's skill. *Id.* Such implementation would reflect routine, predictable applications of well-known control techniques, requiring no new hardware and instead leveraging Fu's disclosed central processor. *Id.* A POSA would have thus had a reasonable expectation of success in implementing Fu with the "at least one control

signal to cause movement of the body within the swimming pool to, or away from, the first portion of the submerged surface." *Id.*

Accordingly, Fu would have rendered obvious claims 1-4. *Id.*, ¶¶274-277.

C. Ground 1c: Claims 1-4 Would Have Been Obvious Over Fu In View Of Benzler

1. Summary Of Benzler

Benzler, EX1013, entitled "Activation System for a Robotic Vehicle," was filed on May 16, 2008 as PCT/EP08/56016, and published on Nov. 25, 2010 as U.S. Patent Pub. No. 2010/0299016. EX1013, (10), (22), (43), (86). Benzler is therefore prior art under at least pre-AIA 35 U.S.C. §§ 102(a), (b), and (e).

Benzler describes "an activation system (1) for a robotic vehicle (2)" that uses image-based navigation to autonomously control movement of vehicle (2) within a work area 3. *Id*., Abstract, ¶[0037]. The system includes at least one "camera (8) configured for generating image data of a work area (3)" and a "logic unit (10) configured for determining the position of the at least one robotic vehicle (2) based on the image data generated by the camera (8)." *Id*., Abstract. "The logic unit 10 calculates driving instructions for the robotic vehicle 2 based on the image data," and the driving instructions are transmitted to robotic vehicle 2 for execution. *Id.*, ¶¶[0044]-[0046].

Benzler describes several example embodiments of the activation system, such as "a snow cleaning vehicle, [a] leaf collecting vehicle, [a] grass collecting vehicle,

thatching vehicle, or [a] weeding vehicle …[and] as a lawnmower." *Id.*, ¶[0023]. In a "particularly preferred" embodiment, "the robotic vehicle is construed as [a] pool-robotic vehicle, thus in particular as [a] filter vehicle and/or cleaning or purifying vehicle … [that] drive[s] in particular on the bottom of a pool, which then creates the work area." *Id.*, ¶[0028]. In this pool embodiment, "[t]he external border 4 of the work area 3 is created by the surrounding pool walls." Figure 3 illustrates the activation system as pool robotic vehicle 2 (*id.*, ¶¶[0036], [0051]-[0056]):

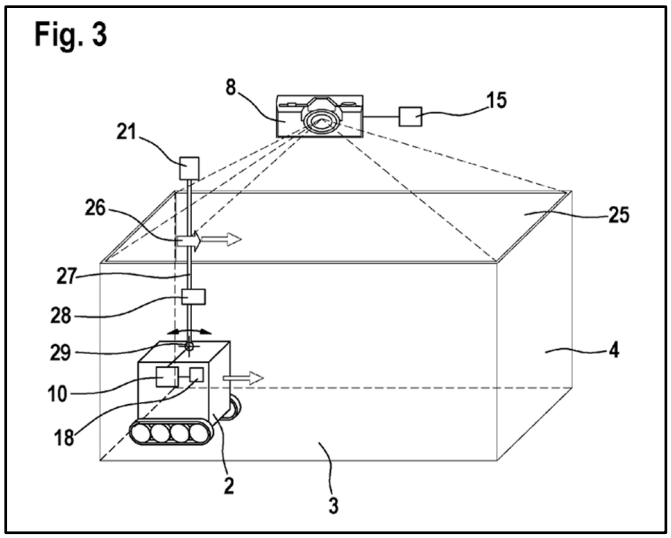

Id., Fig. 3.

Camera 8 transmits data via logic unit 10 to control unit 18, "which controls the not shown drive means" for driving robotic cleaning vehicle 2. *Id.*, ¶[0054].

2. Obviousness Of The "To, Or Away From" Limitation Over Fu In View Of Benzler

To the extent the Board determines that Fu alone does not anticipate or render obvious the "at least one control signal to cause movement of the body within the

swimming pool to, or away from, the first portion of the submerged surface," claims 1-4 are nonetheless obvious over Fu in combination with Benzler. EX1010, ¶¶278-283.

The similar disclosures of Fu and Benzler would have motivated a POSA to consider them together. *Id.*, ¶¶279-282. Fu discloses capturing an image of the pool floor, comparing it to a cleanliness threshold to determine a level of cleanliness, and then adjusting the robot's operations accordingly. EX1007, ¶[0026]. Likewise, Benzler describes an autonomous robotic cleaning system, with a pool cleaning embodiment, that makes movement and cleaning decisions based on an image of the work area. Section IV.C.1; EX1013, Abstract, ¶¶[0016], [0018], [0028], [0037], [0044]-[0046], [0053]. Thus, Benzler, like Fu, is directed to an autonomous robotic cleaner that uses an image to guide its operations, particularly in a pool-cleaning embodiment.

Benzler describes various embodiments of its robotic vehicle, such as an autonomous lawnmower. EX1013, ¶[0023]. In this embodiment, "the logic unit … is … construed in such a way that differently conditioned sections (mowed/not mowed) … are detected and the driving instructions are calculated in such a way that preferably the mowed section … is driven along." *Id.*, ¶¶[0018], [0023], [0045]. In embodiments, "the logic unit detects differently conditioned sections of the work area, for example a mowed or a not mowed section of the work area based on the image

and then considers this information when calculating the driving instructions, in particular in such a way that the robotic vehicle does only or preferably move on one of those sections, in particular the not mowed lawn section." *Id.*, ¶[0016]. Thus, Benzler uses an image to cause motion "only or preferably" toward target sections and away from non-target sections. *Id.*, ¶¶[0016], [0018], [0045].

A POSA would have been motivated to incorporate Benzler's image-based classification-driven motion control into Fu because it is a known technique for improving coverage efficiency and cleaning performance, satisfies design needs to prioritize dirty areas and reduce redundant cleaning, and represents one of a finite, predictable set of control options once regions are classified with respect to a threshold. EX1010, ¶282. Applying Benzler's classification-driven motion to Fu's thresholded cleanliness determinations would have yielded the control signal for causing movement "to, or away from" a portion of the submerged surface captured by the camera, with the robot moving toward sub-threshold (dirtier) regions and away from above-threshold (cleaner) regions. *Id.* A POSA would also have had a reasonable expectation of success. The combination does not require new hardware or unconventional algorithms; Fu already discloses the cameras, processor, and wheels, and it "plans" movement and "adjusts" wheel states based on cleanliness determinations. Implementing Benzler's classification-based movement entails

routine controller configuration that would have been within a POSA's skill. *Id.*, ¶282.

Thus, Fu in view of Benzler renders obvious the "to, or away from" control-signal limitation of claims 1-4 by teaching and motivating use of an image to control motion toward target (dirtier) regions and away from non-target (cleaner) regions. *Id.*, ¶¶278-283.

Claims 1-4 would have been obvious over Fu in view of Benzler. *Id.*, ¶¶278-283.

D. Ground 1d: Claim 5 Would Have Been Obvious Over Fu In View Of Hui

1. Summary Of Hui

Hui, EX1019, entitled "Pool Cleaning Vehicle Having Structure for Cleaning and Sanitizing Pool Water," was filed on Nov. 18, 2008 as U.S. Patent Application No. 12/272,908, and published on June 16, 2011 as U.S. Patent Pub. No. 2011/0139727. EX1019, (10), (21), (22), (43), (54). Hui is therefore prior art under at least pre-AIA 35 U.S.C. §§ 102(a) and (b).

Hui discloses an automated pool cleaning vehicle "which includes the ability for cleaning and sanitizing pool water." EX1019, Abstract, ¶[0001]. The cleaning is performed via "a filter bag, which traps dirt and debris and prevents its return to the pool water," while the sanitizing is performed via "a chemical dispenser [30] for adding chemicals to pool water." *Id.*, ¶[0012]. The chemical dispenser has "a hollow

interior suitable for storing chemicals for sanitizing pool water," and is configured to release the chemicals, such as chlorine, as water passes through it. *Id*., Abstract, ¶¶[0006], [0018], [0022], [0041]. The chemical dispenser may be within the housing (Figure 2), or connected externally to the housing (Figures 8 and 9):

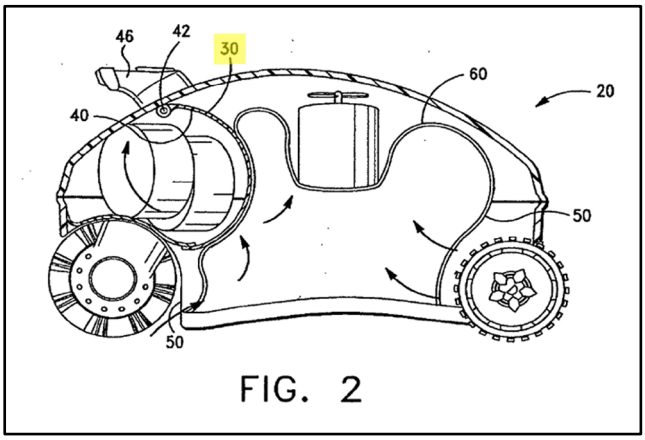

Id., Fig. 2.

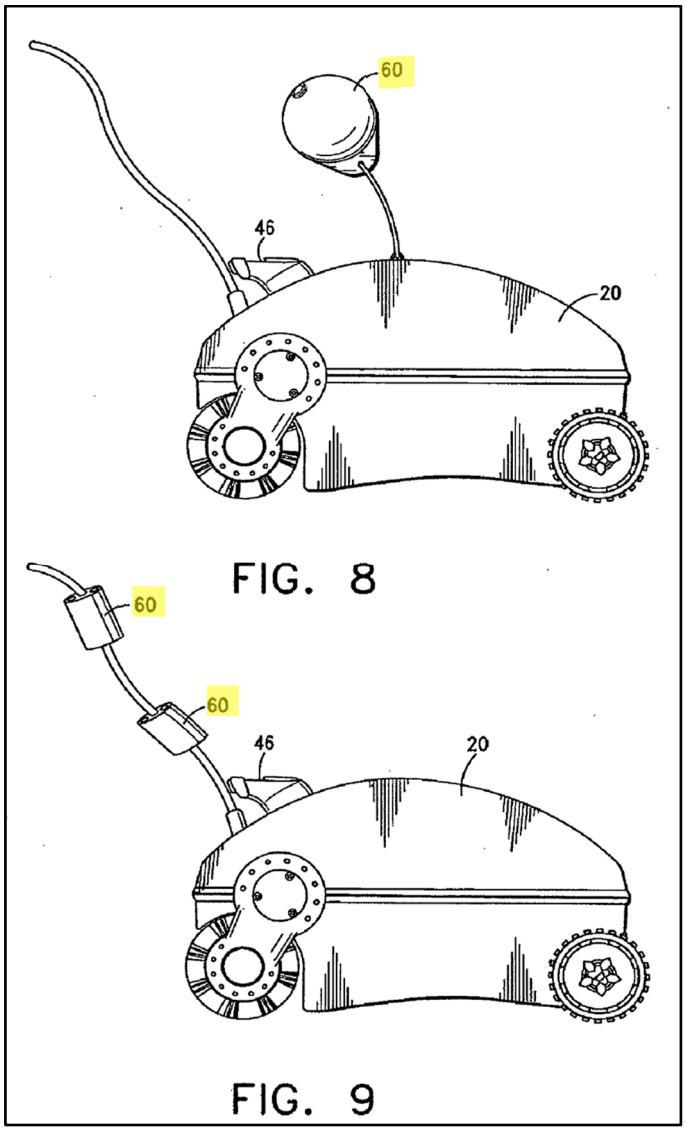

Id., Figs. 8-9 (annotated), ¶[0053] (showing "chemical packet inside the container [60]").

In Figure 2, chemical dispenser member 30 is place within a compartment 40 of swimming pool vehicle 20. *Id*., ¶¶[0042]-[0043]. Chemical dispenser 30 contains chemical packets 32 whose seal dissolves upon contact with water, allowing the chemical content to mix with the passing water. *Id*., ¶¶[0022], [0039]-[0040], [0047]. Chemical dispenser 30 is downstream of filter bag 60 such that water entering through

inlets 50 first passes through filter bag 60, where dirt and debris are trapped, and then continues to chemical dispenser 30, where the filtered water mixes with the chemicals. *Id*., ¶¶[0046], [0050]-[0051]. Thus, the water exiting through the outlet of compartment 40 is both free of debris, as well as sanitized. *Id*., ¶[0052]. In this way, Hui's pool cleaning vehicle performs both mechanical filtration and chemical sanitization, with chemical dispenser 30 being placed "on, in, or carried by" the vehicle body.

2. Independent Claim 5

Claim 5 would have been obvious over Fu in view of Hui. EX1010, ¶¶284-292. The preamble and elements 5a-5c of claim 5 are the same as the preamble and elements 1a-1c of claim 1:

> ~~1~~5. A self-propelled pool cleaner for cleaning debris from a submerged surface of a swimming pool, comprising:
>
> a. a vehicle body;
>
> b. means for moving the vehicle body within the swimming pool;
>
> c. a filter configured to retain debris collected from the submerged surface;
>
> d. a chemical dispenser on, in, or carried by the vehicle body;
>
> ~~d~~e. at least one camera ~~mounted directly or indirectly to the~~on, in, or carried by the vehicle body, for capturing an image of at least a first portion of the submerged surface; and
>
> ~~e~~f. a controller (i) ~~positioned~~ on ~~or~~, in, or carried by the vehicle body, (ii) in electronic communication with the at least one camera~~,~~ and (iii)

> configured to generate, in response to the captured image, at least one control signal to cause movement of the body within the swimming pool to, or away from, the first portion of the submerged surface.

Similarly, elements 5e and 5f are substantially the same as elements 1d and 1e-1g respectively, differing only in wording. *See* Section IV.A.2.e-h. Therefore, the preamble and elements 5a-5c and 5e-5f are disclosed by Fu for the reasons explained in Ground 1a for claim 1.

Claim 5 additionally recites element 5d, analyzed below.

(a) Element 5d: "a chemical dispenser on, in, or carried by the vehicle body;"

Element 5d would have been obvious over Fu in view of Hui. EX1010, ¶¶287-291. Hui's pool cleaning vehicle discloses chemical dispenser 30 that may be "on, in, or carried by" the vehicle body. Section IV.D.1; EX1019, ¶[0012], Figs. 2, 8-9. A POSA would have been motivated to combine Hui's chemical dispenser with Fu's autonomous pool cleaning robot to provide an improved pool cleaning system capable of both mechanical filtration and chemical sanitization. EX1010, ¶¶288-290. Both Fu and Hui are directed to the same field: automated pool cleaning robots that filter pool water; and both share a common functional architecture: a self-propelled underwater vehicle with inlets, outlets, and an internal water flow path where filtration occurs. EX1007, ¶¶[0024], [0026]; EX1019, ¶¶[0046], [0050]-[0051]. Fu's robot comprises a drainage mechanism that draws pool water through water inlet 26 into the robot's water flow channel 24, passes the water through water flow filter screen 23 to

remove debris, and then discharges the filtered water back into the pool. EX1007, ¶¶[0024], [0026].

A POSA would recognize that Hui's chemical dispenser enhances Fu's robot by adding a sanitization step with a simple modification. EX1010, ¶¶288-290. It is commonly known by even laymen that removal of debris alone is insufficient to maintain safe swimming conditions. *Id*. In fact, most swimming pools utilize some method of water sanitization to eliminate harmful microorganisms, addition of chlorine being the most common method. *Id*. Hui recognizes this need, explaining that "it is simply not enough for the water to be clean or in other words, relatively free of dirt and debris, it must be sanitary." EX1019, ¶[0005]. Accordingly, a POSA would have been motivated to incorporate Hui's chemical dispenser 30 into Fu's robot to achieve a predictable improvement—a pool cleaning robot that filters as well as sanitizes pool water. EX1010, ¶¶288-290.

As explained by Dr. Reinholtz, a POSA would have had a reasonable expectation of success in combining these references. *Id.*, ¶290. Fu's robot already provides a water flow path within water flow channel 24, which is analogous to Hui's water flow path. EX1007, ¶¶[0024], [0026]; EX1019, ¶¶[0046], [0050]-[0051]. A POSA could easily integrate Hui's chemical dispenser 30 within Fu's water flow channel 24 such that the filtered water passes through the chemical dispenser before being discharged into the pool. EX1010, ¶290. Alternatively, a POSA could also

mount Hui's chemical dispenser 30 externally to Fu's robot as Hui teaches in its embodiments of Figures 8 and 9. *Id.* Either configuration would expose the pool water to chemical dispenser 30 in the same manner as in Hui, thereby enhancing Fu's robot to perform both cleaning and sanitizing functions. *Id.*

Accordingly, Fu in view of Hui renders obvious element 5d's "a chemical dispenser [Hui's chemical dispenser 30] on, in, or carried by the vehicle body [robot housing body 1]."

Claim 5 would have been obvious over Fu in view of Hui. *Id.*, ¶¶284-292.

E. Ground 1e: Claim 5 Would Have Been Obvious Over Fu In View of Benzler, In Further View Of Hui

Claim 5 would have been obvious over Fu and Hui. Section IV.D.2. However, to the extent the Board finds that Fu does not disclose the "at least one control signal to cause movement of the body within the swimming pool to, or away from, the first portion of the submerged surface," claim 5 is nonetheless obvious over Fu in view of Benzler, in further view of Hui. EX1010, ¶¶293-294. A POSA would have been motivated to combine Fu and Benzler to yield the control signal for causing movement "to, or away from" a portion of the submerged surface for the reasons explained for Ground 1c. Section IV.C.2. A POSA would further have been motivated to add Hui's chemical dispenser 30 to the Fu/Benzler robot for the reasons stated in Ground 1d, *e.g.*, to advantageously enable sanitization of the pool water along with filtration. Section IV.D.2.

Claim 5 would have been obvious over Fu in view of Benzler, further in view of Hui. EX1010, ¶¶293-294.

F. Ground 2a: Claims 1, 2, And 4 Would Have Been Obvious Over Schnittman In View Of Benzler

1. Summary Of Schnittman

Schnittman, EX1008, entitled "Debris Monitoring," was filed December 30, 2011, and published July 5, 2012. EX1008, (22), (43). Schnittman incorporates by reference and claims priority to U.S. Provisional Application No. 61/428,808 (the "'808 provisional"), filed December 30, 2010. *Id*., (60). Schnittman is prior art under at least pre-AIA 35 U.S.C. §§ 102(a) and (e).

Schnittman discloses an autonomous cleaning robot having a debris monitoring system and onboard sensing for navigation and safety. *Id*., Abstract, ¶¶[0002], [0004]-[0006].

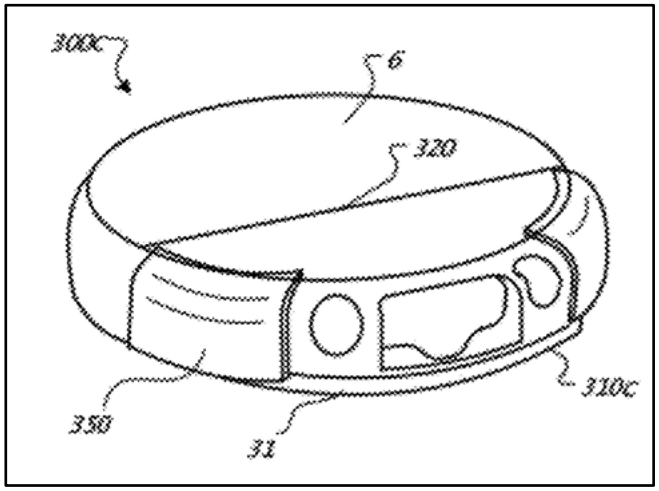

Id., Fig. 3C (example cleaning robot). Embodiments of Schnittman's cleaning robot include a drive assembly, cleaning assemblies, and a sensor suite, enabling behaviors

such as debris-dependent spot cleaning, edge/cliff avoidance, and autonomous return to a maintenance/charging station. *Id.*, Fig. 2; ¶¶[0113], [0118]-[0119], [0191]-[0203], [0216]-[0227].

In embodiments, Schnittman's cleaning robot further includes a microprocessor 245 that executes routines and issues control signals to move the robot (*id.*, ¶¶[0118]-[0119]):

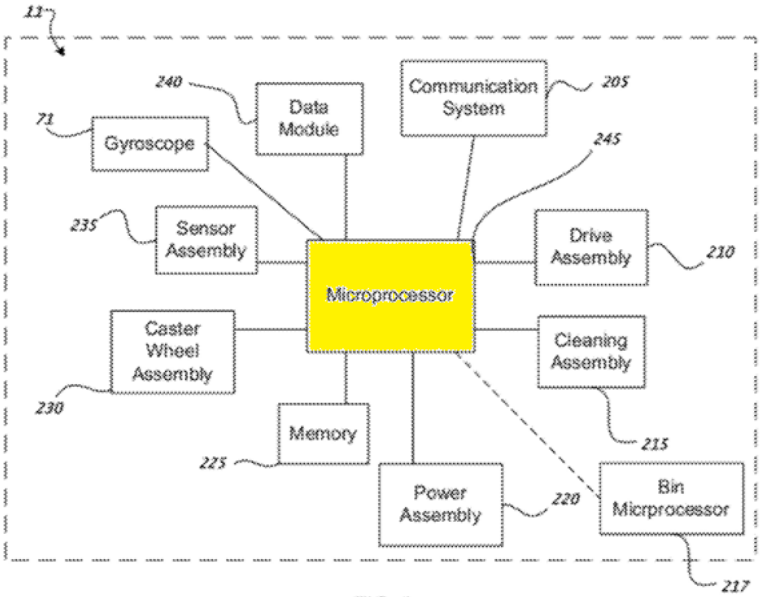

FIG. 2

Id., Fig. 2 (annotated). Microprocessor 245 is connected to drive assembly 210, which includes differentially driven right and left wheels, wheel motors, and encoders. *Id.*, ¶[0119]. "The drive assembly 210 is operable to receive commands from the microprocessor 245." *Id.*

Additionally, "in some implementations, the robot 11 includes a camera 1190 disposed toward the forward portion of the robot 11, with a field of view beyond the

perimeter of the robot 11" (*id.*, ¶[0204]):

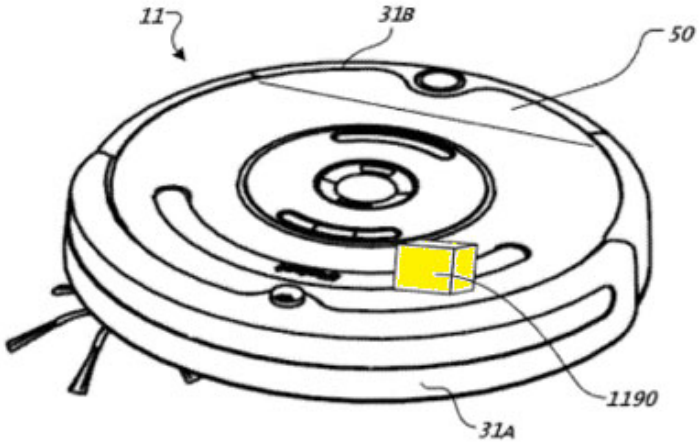

FIG. 11

Id., Fig. 11; *see also id.*, ¶[0045] ("In some implementations, the debris sensor includes a camera directed substantially forward of the cleaning apparatus. In certain implementations, the camera is movable to scan an area substantially forward of the cleaning apparatus."). Camera 1190 is "in communication with the microprocessor 245," which controls the robot based on signals received from the camera. *Id.*, ¶[0204].

Schnittman is analogous art to the '766 Patent because (1) it is from the same field of endeavor as the '766 Patent, and (2) it is reasonably pertinent to the problem faced by the inventors of the '766 Patent. EX1010, ¶109; s*ee Airbus S.A.S. v. Firepass Corp.*, 941 F.3d 1374, 1379 (Fed. Cir. 2019).

First, the '766 Patent and Schnittman are in the same field of endeavor: autonomous cleaning robots. *Compare* EX1003, 1:24-29 (automated, robotic cleaners

for cleaning surfaces) *with* EX1008, ¶¶[0002]-[0003] ("This application relates to robots, and more particularly to autonomous coverage robots" for "removing debris from a surface.").

Second, Schnittman is reasonably pertinent to at least one problem purportedly addressed by the '766 Patent: ensuring "that all portions of … pool surfaces are satisfactorily cleaned." EX1003, 1:24-29. Schnittman describes adaptive cleaning based on detected debris: In response to an identification of debris on a surface, Schnittman's autonomous cleaning robot can perform various actions, including altering its path, running spot cleaning patterns, and steering toward the debris. EX1008, Figs. 10A-10B; ¶¶[0024], [0191]-[0203]. This focuses cleaning efforts where they are most necessary and enables better cleaning coverage, thus ensuring satisfactory cleaning of a surface. EX1010, ¶109. A POSA making a debris detecting pool cleaner would have thus "consulted [Schnittman] and applied [its] teachings in seeking a solution to the problem [POSA] was attempting to solve." *Airbus S.A.S*, 941 F.3d at 1382.

2. Schnittman Is Prior Art As Of December 30, 2010

Schnittman is entitled to the December 30, 2010 priority date of the '808 Provisional because the provisional supports at least claim 1 of Schnittman. A later patent enjoys the priority date of the provisional so long as the provisional "contain[s] a written description of the invention … in such full, clear, concise, and exact terms, to enable

an ordinarily skilled artisan to practice the invention claimed in [the later patent or published patent application]." *Amgen Inc. v. Sanofi*, 872 F.3d 1367, 1380 (Fed. Cir. 2017) (quotation omitted). Similarly, "the written description of the provisional must adequately support the claims of the non-provisional application." *Id.* (quotation omitted); *see also Apple Inc. v. Int'l Trade Comm'n*, 725 F.3d 1356, 1372 (Fed. Cir. 2013).

As shown below, the '808 Provisional fully supports at least claim 1 of Schnittman:

Schnittman (US2012/0169497, EX1008)	**U.S. Provisional Application 61/428,808 (EX1011)**
1[a] A debris monitoring system comprising:	"In one aspect, a debris monitoring system includes a receptacle, a first and a second emitter, and a first receiver." EX1011, ¶[0003].
1[b] a receptacle defining an opening to receive debris into the receptacle, the opening having a top portion and a bottom portion, the top portion above the bottom portion as debris is received into the receptacle;	"In one aspect, a debris monitoring system includes **a receptacle**, a first and a second emitter, and a first receiver. **The receptacle defines an opening to receive debris into the receptacle**." *Id.*, ¶[0003]. "In certain implementations, **the opening has a top portion and a bottom portion, the top portion above the bottom portion as debris is received into the receptacle** …." *Id.*, ¶[0006].
1[c] a first and a second emitter, each arranged to emit a signal across at least a portion of the opening; and	"In one aspect, a debris monitoring system includes a receptacle, **a first and a second emitter**, and a first receiver…. The first and second emitter are **each arranged to emit a signal across at least a portion of the opening**." *Id.*, ¶[0003].
1[d] a first receiver proximate to the first emitter to receive reflections of the signal emitted by the first emitter, the first	"In one aspect, a debris monitoring system includes a receptacle, a first and a second emitter, and **a first receiver**…. **The first receiver is proximate to the first emitter to receive reflections of the signal**

receiver disposed along a top portion of the opening and toward the opening to receive an unreflected portion of the signal emitted by the second emitter across the largest dimension of the opening.	**emitted by the first emitter**, and the first receiver is **disposed toward the opening to receive an unreflected portion of the signal emitted by the second emitter across at least a portion of the opening**." *Id.*, ¶[0003]. "In some implementations, the first receiver and the second emitter are disposed substantially opposite one another **across the largest dimension of the opening**." *Id.*, ¶[0005]. "In certain implementations, the opening has a top portion and a bottom portion, the top portion above the bottom portion as debris is received into the receptacle, **and the first and second emitters and the first receiver each disposed toward a top portion of the opening, with the first receiver disposed above the first and second emitters**." *Id.*, ¶[0006]. "The debris monitoring system of claim 21 wherein the opening has a top portion and a bottom portion, the top portion above the bottom portion as debris is received into the receptacle, and the first and second emitters and **the first receiver each disposed toward a top portion of the opening**, with the first receiver disposed above the first and second emitters." *Id.*, claim 24.

Additionally, the '808 provisional describes the subject matter of Schnittman that Petitioner relies upon as prior art. *Dynamic Drinkware, LLC v. Nat'l Graphics, Inc.*, 800 F.3d 1375, 1380-81 (Fed. Cir. 2015). EX1012 is a redline comparison showing textual differences between the '808 provisional and Schnittman. Blue and

underlined text reflects material present in only Schnittman, while unmarked text reflects material common to both Schnittman and the provisional. Additionally, the Petition-cited Schnittman passages are highlighted in yellow. As EX1012 shows, none of the Petition-cited Schnittman passages appear as blue, underlined text, demonstrating that every portion of Schnittman relied upon in the Petition is present verbatim or in substance in the '808 provisional. Additionally, all of the figures of Schnittman cited in the Petition (*i.e.*, Figs. 1A, 1B, 1C, 2, 3C, 10A, 10B, 11, 14D) are present in the '808 provisional.

3. Motivation To Combine

A POSA would have been motivated to consider Schnittman and Benzler together because they describe similar technology (*e.g.*, autonomous cleaning robots that employ computer vision) and address the same problem: enabling a robot to make cleaning and navigation decisions based on an image of the cleaning surface. EX1010, ¶¶295-304. Schnittman discloses an autonomous cleaning robot 11 with movement and cleaning decisions tied to an image received from a debris sensor, including embodiments where the debris sensor is a camera 1190. Section IV.D.1. Likewise, Benzler describes an autonomous robotic cleaning system, with a pool cleaning embodiment, that makes movement and cleaning decisions based on an image of the work area. Section IV.C.1.

At the time of the '766 Patent, POSAs working in the field of autonomous,

image-based cleaning robots, whether for floors, lawns, or pools, were addressing the same problem: using an image to enable a robot to perceive its cleaning surface, and execute cleaning operations autonomously. EX1010, ¶299. Both Schnittman and Benzler address that problem, and offer complementary, overlapping teachings. *Id*. Importantly, Schnittman is not limited to any specific environment; its teachings apply generally to cleaning robots that analyze an image of the cleaning surface. As explained by Dr. Reinholtz, this image-based control represented a state-of-the-art approach to autonomous cleaning at the time, and a POSA designing a pool-cleaning robot would have recognized that Schnittman's teachings and stated advantages (*e.g.*, robust, debris-responsive cleaning coverage) could be advantageously leveraged in a pool-cleaning context as taught by Benzler. *Id.*, ¶¶295-304; EX1008, Figs. 10A-10B; ¶¶[0024], [0191]-[0203].

POSA would have understood that robotics principles underlying image-based cleaners, like those developed by leading manufacturers such as iRobot (assignee of Schnittman), are readily adaptable to different environments. EX1010, ¶300. Robotics, like any other technology, develops by building on existing technology and adapting existing technology to new contexts. *Id.* POSAs in the field of autonomous pool cleaners were not working in isolation; they routinely drew on technologies from the broader field of autonomous cleaning. *Id.* Indeed, Benzler itself confirms this: it describes the same image-driven framework as Schnittman, while applying this

framework to both land and water embodiments, such as a lawnmower, a snow cleaning vehicle, a pool cleaning vehicle, etc. Section IV.C.1; EX1013, ¶¶[0028], [0037], [0044]-[0046]. By describing the same image-based system across multiple domains, land and water alike, Benzler demonstrates that a POSA understood how to adapt the principles of image-based robotic navigation and cleaning across various environments

Benzler would have further reinforced a POSA's understanding that Schnittman's cleaning robot could be adapted for underwater use. For example, Benzler's teaching of a "moisture-sealed housing" for the internal logic unit (EX1013, ¶[0011]) contemplates operation in wet environments (*id.*, Fig. 3 (showing onboard logic unit 10 submerged in a pool)), providing a practical implementation detail that a POSA would have easily incorporated when adapting Schnittman's robot for underwater use. Likewise, Benzler's teaching of "pool robotic vehicles [that] drive in particular on the bottom of a pool" using wheels powered by a drive motor (*id.*, ¶¶[0028], [0051], Fig. 3) reinforces that Schnittman's similar motor-powered wheels 45 could be readily adapted for underwater use. Schnittman's image-based debris detection and navigation system, combined with Benzler's known underwater implementation of a similar image-based pool cleaner, would predictably yield an image-based underwater pool cleaner that is driven based on an image of the pool surface.

A POSA would have had a reasonable expectation of success in making this combination. EX1010, ¶303. By the time of the '766 Patent, the necessary adaptations to render a system water-ready were straightforward and within a POSA's skill, such as moisture-sealing or potting electronics, waterproofing, ensuring stable mobility and traction along submerged pool surfaces to counter buoyancy and slippage, and applying known image-processing techniques to extract useful information from underwater camera imagery. *Id.* For example, in the same period, the use of cameras on underwater vehicles was well known. *See, e.g.*, EX1014 ("underwater sediment cleaning apparatus … wherein the controller … comprises: a camera unit"), EX1015 ("Robotic submersible cleaning system" including "use of an intelligent camera system 81 [to] assist in maintaining the positional accuracy … along an underwater surface"), EX1016 ("apparatus and method of … inspecting a submerged surface of a fluid reservoir" including a "navigation camera 6"). Researchers documented effective techniques to improve the effectiveness of underwater imaging. For example, literature from around that time described various normalization, filtering, and color-space methods that extract target information from underwater environments in real time. *See* EX1017, 7. These developments would have reinforced a POSA's motivation to extend the teachings of Schnittman to the underwater context, with Benzler providing clear guidance and confirmation that such an adaption was both known and would be successful.

4. Claim 1

(a) Preamble

To the extent limiting, claim 1's preamble would have been obvious over Schnittman in view of Benzler. EX1010, ¶¶305-308. Schnittman discloses autonomous robotic cleaners for removing debris from cleaning surfaces (*e.g.*, floors) (EX1008, ¶¶[0002], [0023], [0032]-[0033]):

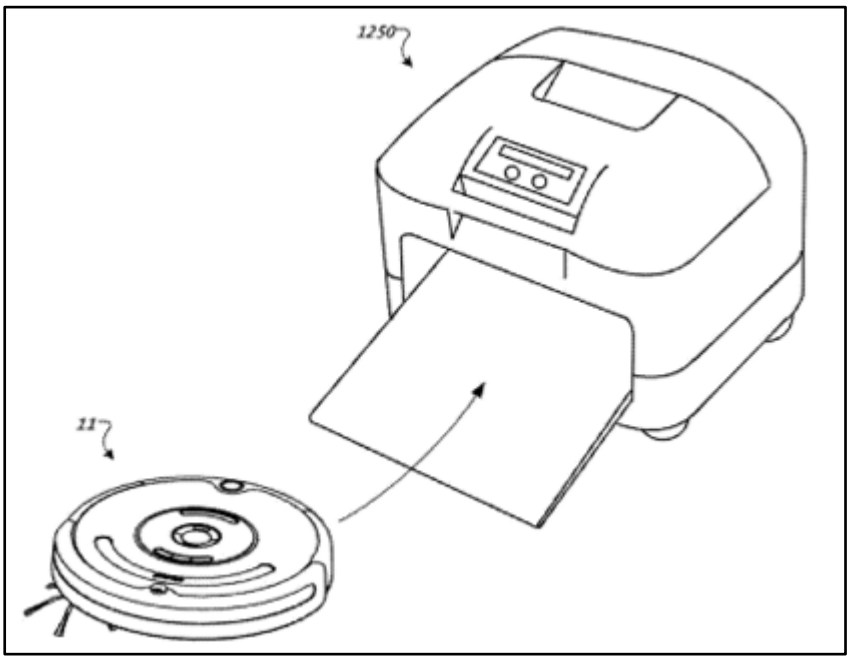

Id., Fig. 14D (example robotic cleaner 11 and maintenance station 1250); ¶¶[0097], [0216]-[0217]). In embodiments, Schnittman's robotic cleaners include "debris agitator[s]," such as brushes, that "sweep or otherwise agitate debris from the cleaning surface." *Id.*, ¶¶[0026], [0027], [0031], [0115], [0119], [0128], [0130]-[0131].

Further, Schnittman's autonomous robotic cleaners are "self-propelled" because they include an onboard drive system and wheels that move and steer the

robot without external propulsion. *See*, *e.g.*, *id.*, ¶[0005] ("The drive system is coupled to the housing and configured to maneuver the robot across a cleaning surface."), [0112] ("installed along either side of the robot body 31 are differentially driven wheels 45, each rotatable about a transverse axis, to mobilize the robot 11"), [0119] ("right and left wheel motors" for the respective "right and left differentially driven wheels 45"). In embodiments, power for moving Schnittman's robotic cleaner is provided via an onboard battery that is charged at a maintenance station 1250. *Id.*, ¶¶[0048], [0050], [0054], [0115], [0118], [0216]-[0217], [0221], [0227], [0230].

Thus, Schnittman's autonomous robotic cleaners disclose a "self-propelled … cleaner for cleaning debris from a … surface," and as explained above, a POSA would have been motivated to apply Schnittman's teachings in the pool-cleaning context for cleaning submerged surfaces in view of Benzler. Section IV.F.3. Therefore, Schnittman in view of Benzler renders obvious the preamble's "self-propelled pool cleaner [robotic cleaner 11] for cleaning debris from a submerged surface of a swimming pool." EX1010, ¶¶305-308.

(b) Element 1a

Schnittman discloses element 1a. *Id.*, ¶¶309-311. Schnittman states that embodiments of its autonomous robotic cleaners include "a robot body 31 (*e.g.*, a chassis and/or housing) which carries an outer shell 6 connected to a bumper 5" (EX1008, ¶[0111]):

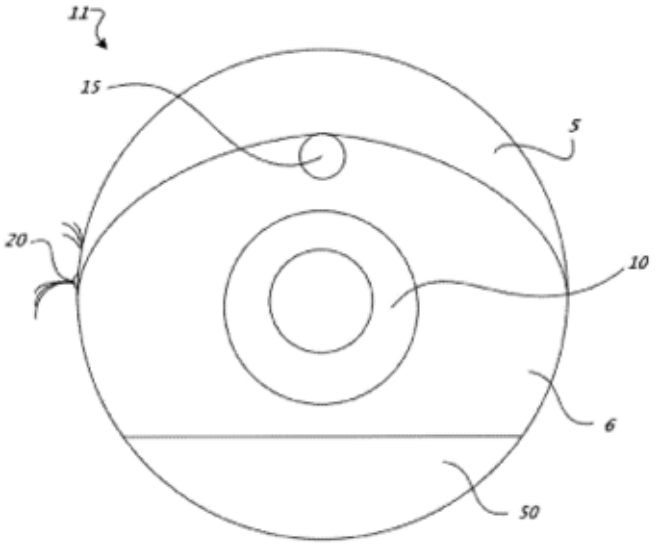

FIG. 1A

Id., Fig. 1A.

Thus, Schnittman discloses "a vehicle body [robot body 31]." EX1010, ¶¶309-311.

(c) Element 1b

Schnittman in view of Benzler would have rendered obvious element 1b. *Id.*, ¶¶312-315. The term "means for moving the vehicle body within the swimming pool" is an MPF term, and the corresponding structures in the '766 Patent include "wheels, rollers, tracks or other surface contacting members powered by a motor and the like." EX1003, 3:31-43; Section II.C.1.

Schnittman's robotic cleaners include an onboard drive system (or "drive assembly") for moving the robot, including its body. EX1008, ¶¶[0005], [0040], [0044], [0119], [0177]. The drive system "includes right and left differentially driven

wheels 45, right and left wheel motors, and wheel encoders" in embodiments (*id.*, ¶[0119]):

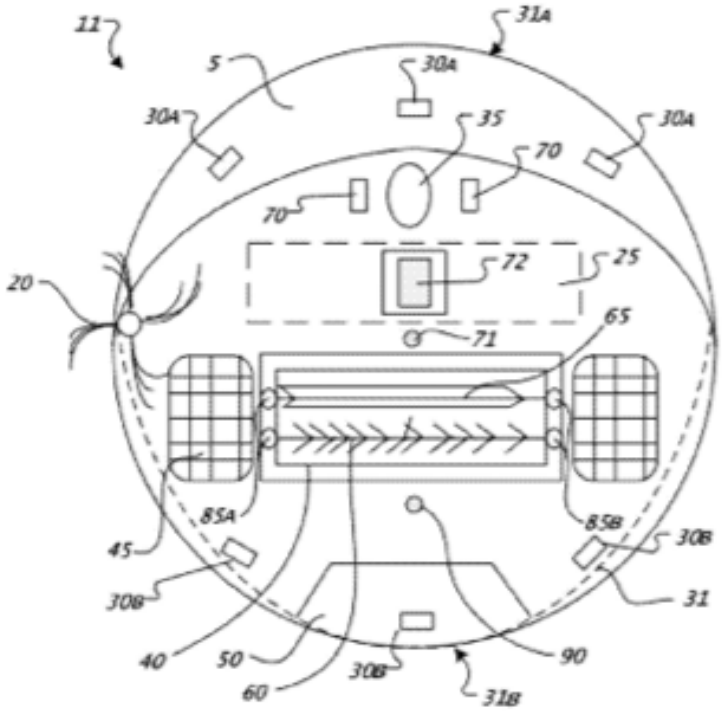

FIG. 1B

Id., Fig. 1B.

Schnittman's "drive system is coupled to the [robot's] housing and configured to maneuver the robot across a cleaning surface." *Id.*, ¶[0005]. Further, the drive system is "operable to receive commands from the microprocessor 245" for controlling the robot's movement. *Id.*, ¶¶[0119], [0177].

While Schnittman does not disclose moving "within [a] swimming pool" specifically, Benzler's teaching of "pool robotic vehicles [that] drive in particular on the bottom of a pool" using wheels powered by a drive motor provides a drive system similar to Schnittman's, reinforcing that Schnittman's similar motor-powered wheels

45 could be readily adapted for underwater use. Section IV.F.3.

Therefore, Schnittman in view of Benzler renders obvious "means for moving the vehicle body within the swimming pool [drive system with wheels 45]." EX1010, ¶¶312-315.

(d) Element 1c

Schnittman in view of Benzler would have rendered obvious element 1c. *Id.*, ¶¶316-317. Schnittman discloses that its robotic cleaners include an "internal filter 54" (EX1008, ¶[0117]):

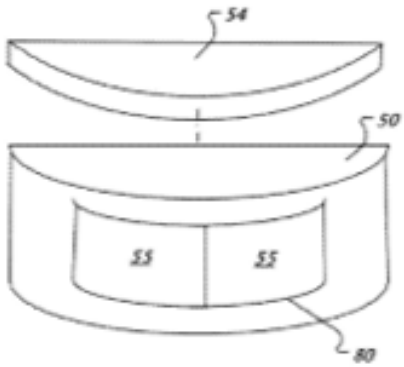

FIG. 1C

Id., Fig. 1C; *see also id.*, ¶¶[0120]-[0124], [0129].

Internal filter 54 is part of the robot's cleaning bin 50, and it retains collected debris. *Id.*, ¶317; EX1008, ¶¶[0117], [0121], [0123]-[0124] (internal filter must be cleaned to remove collected debris), [0129], [0242], [0248]. As explained by Dr. Reinholtz, a pool-cleaner implementation of Schnittman in view of Benzler would include a filter like filter 54, with the filter retaining debris collected by the robot while passing filtered, clean water back into the swimming pool. EX1010, ¶317. Benzler

describes the use of debris-retaining filters in pool-cleaning robots. EX1013, ¶[0028] ("the robotic vehicle is construed as [a] pool-robotic vehicle, thus in particular as [a] filter vehicle and/or cleaning or purifying vehicle"), Claim 22 ("a working element of the [pool-cleaning] robotic vehicle, in particular the width of a filter unit"). Such on-board filters for pool-cleaning robots were well-known at the time of the alleged invention, and a POSA would have understood how to modify or replace Schnittman's filter for use in Benzler's pool-cleaning context. EX1010, ¶317; Section IV.F.3.

Therefore, Schnittman in view of Benzler renders obvious "a filter [internal filter 54] configured to retain debris collected from the submerged surface." *Id.*, ¶¶316-317.

(e) Element 1d

Schnittman in view of Benzler would have rendered obvious element 1d. *Id.*, ¶¶318-320. Schnittman discloses embodiments of its robotic cleaners including a camera 1190:

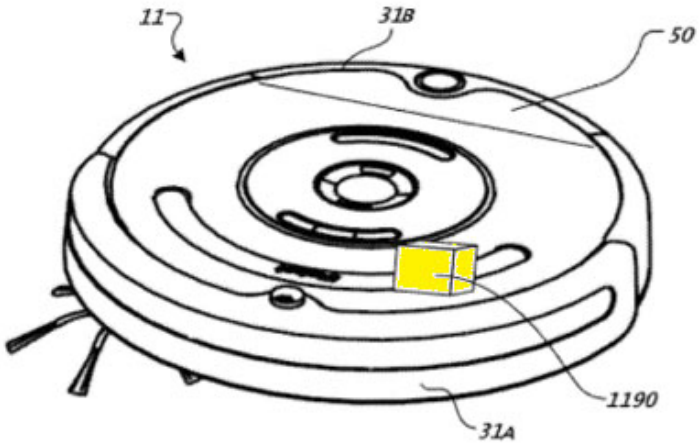

FIG. 11

EX1008, Fig. 11; *see also id.*, ¶¶[0045], [0204]-[0205].

Schnittman's camera is mounted on or in the body of the robot. *Id.*, ¶[0204] ("Referring to FIG. 11, in some implementations, the robot 11 includes a camera 1190 disposed toward the forward portion of the robot 11, with a field of view beyond the perimeter of the robot 11."). The camera captures images of at least a first portion of a cleaning surface. EX1010, ¶319. Specifically, the camera "scan[s] an area substantially forward of the [robot]" as the "robot [moves] over the cleaning surface." EX1008, ¶¶[0045], [0204]. The camera is "in communication with [a] microprocessor 245," and the "microprocessor 245 … process[es] [a] signal from the camera … to recognize debris on the cleaning surface and maneuver the robot 11 toward the debris." *Id.*, ¶[0204]. As explained by Dr. Reinholtz, a POSA would have thus understood that Schnittman's camera captures an image of at least a portion of the cleaning surface: The microprocessor could not "recognize debris on the cleaning

surface" absent an image of the cleaning surface captured by the camera. EX1010, ¶319.

While Schnittman does not disclose capturing an image of a "submerged [underwater] surface" specifically, a pool-cleaner implementation of Schnittman in view of Benzler would capture such an image. Section IV.F.3; EX1010, ¶320.

Accordingly, Schnittman in view of Benzler renders obvious "at least one camera [camera 1190] mounted directly or indirectly to the body for capturing an image of at least a first portion of the submerged surface." *Id.*, ¶¶318-320.

(f) Element 1e:

Schnittman discloses element 1e. *Id.*, ¶¶321-323. Schnittman discloses embodiments of its robotic cleaners including a microprocessor 245 (EX1008, ¶[0118]):

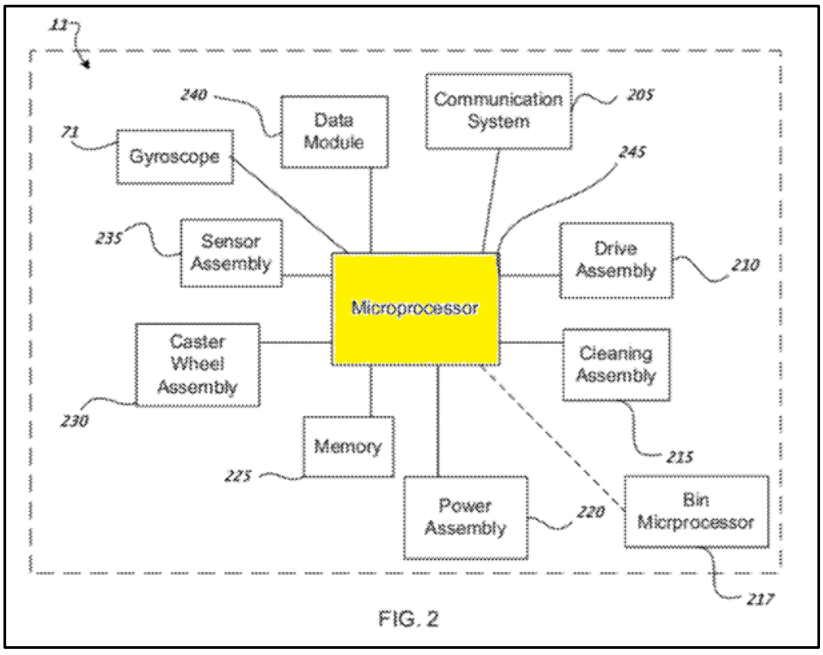

Id., Fig. 2 (annotated).

Schnittman's microprocessors are "capable of executing routines and generating and sending control signals" for "controlling [the robot's] drive assembly" and other components. *Id.*, ¶¶[0118]-[0119], [0177]. In Figure 2, the routines executed by microprocessor 245 are stored in memory 225, and data module 240 is configured to "upload new software routines or values to the robot 11." *Id.*, ¶[0118]. Schnittman's microprocessor thus discloses the "controller" because it controls operation of the cleaning robot and is similar to controllers described in the '766 Patent. EX1010, ¶322. For instance, the '766 Patent describes that its controller may be implemented using "one or more processing units … that execute[] sequences of instructions contained in a memory," with the execution of such sequences "caus[ing] the processing unit to perform steps such as generating control signals." EX1003, 4:16-26 ("The instructions may be loaded in a random access memory (RAM) for execution by the processing unit from a read only memory (ROM), a mass storage device, or some other persistent storage."). Schnittman's microprocessor 245 likewise executes routines stored in memory to generate control signals for controlling the robot EX1008, ¶¶[0118]-[0119], [0177].

Schnittman's microprocessor 245 is also positioned on or in the body of the robot. In Figure 2, microprocessor 245 is part of robot 11, and thus would be positioned on or in the robot's body. EX1008, ¶¶[0118] ("The robot 11 includes a

microprocessor 245 ….”). Further, Schnittman states that the microprocessor is “included within the robot 11.” *Id.*

Therefore, Schnittman discloses “a controller [microprocessor 245]” that is “positioned on or in the body.”

(g) Element 1f

Schnittman discloses element 1f. EX1010, ¶¶324. Schnittman discloses that its microprocessor (“controller”) is in communication with the robot’s camera and configured to process signals from the camera: “[C]amera 1190 can be in communication with the microprocessor 245 …. [T]he microprocessor 245 can process the signal from the camera 1190 to recognize debris on the cleaning surface and maneuver the robot 11 toward the debris. Additionally or alternatively, the microprocessor 245 can process the signal from the camera 1190 to recognize obstacles and/or debris in the vicinity of the robot 11 and maneuver the robot 11 to avoid obstacles and/or debris ….” EX1008, ¶¶[0204]-[0205].

Schnittman thus discloses the controller (microprocessor 245) “in electronic communication with the at least one camera [camera 1190].” EX1010, ¶324.

(h) Element 1g

Schnittman in view of Benzler would have rendered obvious element 1g. *Id.*, ¶¶325-329. Schnittman discloses that its microprocessor (“controller”) generates commands (“control signals”) to cause movement of the robot and its body: “The

drive assembly 210 is connected to the microprocessor 245" and "is operable to receive commands from the microprocessor 245." EX1008, ¶[0119]; *see also id.*, ¶[0177] ("The microprocessor [245] can move the robot 11 through one or more of the spot coverage patterns below aby controlling the drive assembly 210 based at least in part on a signal received from the gyroscope 71."). The control signals generated by Schnittman's microprocessor can cause the robot to move based on detected debris and/or in different cleaning patterns(*id.*, ¶¶[0177], [0191]-[0203]):

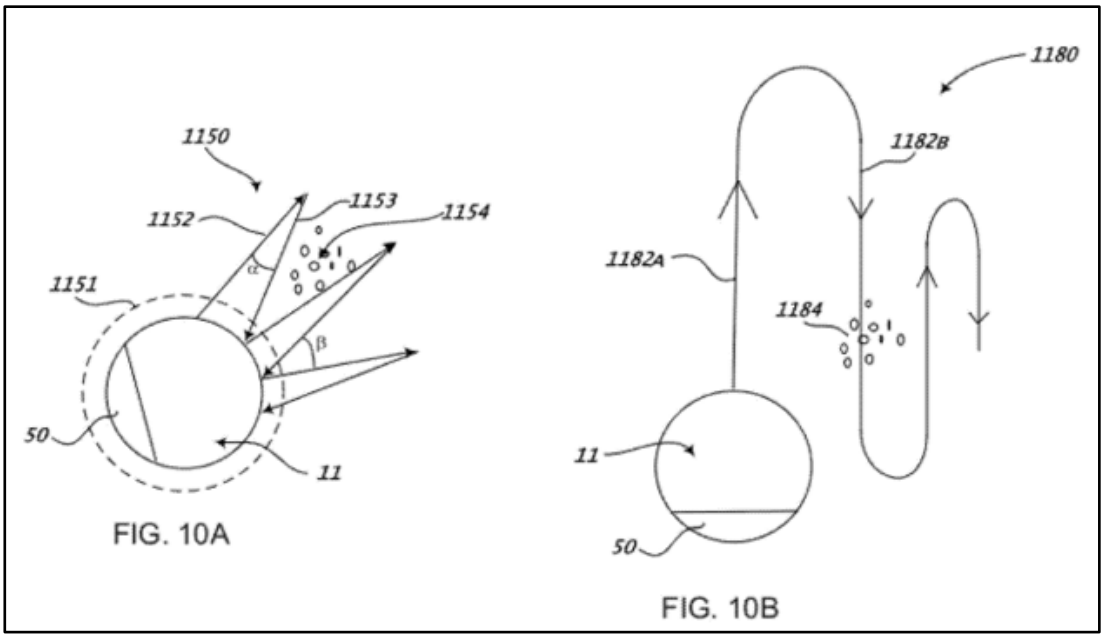

Id., Figs. 10A, 10B (example cleaning patterns). Accordingly, Schnittman discloses the controller configured to generate control signals to cause movement of the robot's body. EX1010, ¶326.

Schnittman further discloses the generation of such control signals "in response to the captured image." Schnittman's camera "can be in communication with the

microprocessor 245 such that the movement of the robot 11 over the cleaning surface can be based at least in part on the detection of debris and/or an obstacle by the camera 1190." EX1008, ¶[0204]. Further, the microprocessor "can process the signal from the camera" and control movement of the robot accordingly. *Id.*, ¶¶[0204]-[0205]. Such control signals "cause movement of the [robot's] body … to, or away from, the first portion of the … surface":

> [T]he microprocessor 245 can process the signal from the camera 1190 to recognize debris on the cleaning surface and ***maneuver the robot 11 toward the debris***. Additionally or alternatively, the microprocessor 245 can process the signal from the camera 1190 to recognize obstacles and/or debris in the vicinity of the robot 11 and ***maneuver the robot 11 to avoid obstacles and/or debris*** larger than a specific size threshold (e.g., a value less than about the smallest opening defined by the cleaning head).

EX1008, ¶¶[0204]-[0205].

As explained by Dr. Reinholtz, the image captured by Schnittman's camera depicts a portion of the cleaning surface (*see* Section IV.F.4.e), and the microprocessor processes the image to recognize debris in it. EX1010, ¶328. Based on the recognized debris in the image, the microprocessor generates control signals for moving the robot toward or away from the portion of the cleaning surface having the recognized debris. *Id.*

While Schnittman does not disclose control signals for causing movement "within the swimming pool" and toward a portion of a "submerged [underwater] surface" specifically, a POSA would have understood, in view of Benzler, how to

adapt Schnittman's robotic cleaners for use in this context and would have been motivated to do so for the reasons in Section IV.F.3. *Id.*, ¶329. Therefore, Schnittman in view of Benzler renders obvious "a controller [microprocessor 245]" "configured to generate, in response to the captured image, at least one control signal to cause movement of the body within the swimming pool to, or away from, the first portion of the submerged surface." *Id.*, ¶¶325-329.

Schnittman in view of Benzler renders obvious claim 1. *Id.*, ¶¶305-330.

5. Claim 2

Claim 2 is unpatentable over Schnittman in view of Benzler for the reasons explained for claim 1. *See also* Section IV.A.3.

6. Claim 4

Claim 4 is unpatentable over Schnittman in view of Benzler for the reasons explained for claim 1. *See also* Section IV.A.5.

G. Ground 2b: Claim 3 Would Have Been Obvious Over Schnittman In View Of Benzler, In Further View Of Bailey

1. Summary Of Bailey

Bailey, EX1018, entitled "User-assisted Robot Navigation System," was filed on July 14, 2009 as U.S. Patent Application No. 12/502,699, and published on Jan. 29, 2013 as U.S. Patent No. 8,364,309 B1. EX1018, (10), (21), (22), (45), (54). Bailey is therefore prior art under at least pre-AIA 35 U.S.C. § 102(e).

Bailey describes a mobile robot 102, such as a room cleaning robot or a pool

cleaning robot, that autonomously navigates within a space to perform cleaning tasks, while also allowing user interaction and control through a remote management station 112. EX1018, 1:29-32, 3:46-49, 6:3-7:51, 17:26-29, claim 1. The robot 102 includes a control engine 300 that is an onboard processor implemented as "microprocessors, central processing units (CPUs), or programmable logic devices" "configured to execute computer code or instructions stored in a memory." *Id.*, 4:40-42, 5:31-39. The control engine 300 interfaces with the robot's "sensors, motors, communication facility, and other components of the robot, such that the robot control engine can receive data from the sensors, control the motors, and communicate with the management station 112." *Id.*, 5:19-24.

2. Independent Claim 3

As shown in Ground 1a (Section IV.A.4), claim 3's preamble and elements 3a-3d are substantially the same as claim 1's preamble and elements 1a-1d. Therefore, the preamble and elements 3a-3d are obvious over Schnittman in view of Benzler for the reasons explained in Ground 2a. Section IV.F.4.

(a) Element 3e:

Element 3e is obvious over Schnittman in view of Benzler for the reasons explained for element 1e. EX1010, ¶334; Section IV.F.4.f.

(b) Element 3f:

Element 3f is obvious over Schnittman in view of Benzler, in further view of

Bailey. EX1010, ¶¶335-343.

For the reasons explained for element 1f, Schnittman makes obvious the controller (microprocessor 245) "in electronic communication with the at least one camera [camera 1190]." *Id.*; Section IV.F.4.g. Schnittman's remote indicator 1202 (EX1008, ¶[0214]) is a "portable electronic device" in "electronic communication with" the controller, as required by element 3f. EX1003, ¶336.

In addition, Bailey provides the complementary teaching of "a portable electronic device" "in electronic communication with" the controller. Bailey's management station 112, which may be implemented as "workstations, desktop computers, laptop computers or other personal computers," provides a user interface for remotely monitoring and interacting with robot 102. EX1018, 3:23-30, 7:23-51. Management station 112 is remote from robot 102, and it communicates with the onboard control engine 300 through standard technologies such as a "wireless network interface card (NIC), an Ethernet-based NIC, a Bluetooth interface or an infra red (IR) interface," or "a wireless data connection … 350." *Id.*, 3:37-40, 7:5-10, Fig. 1.

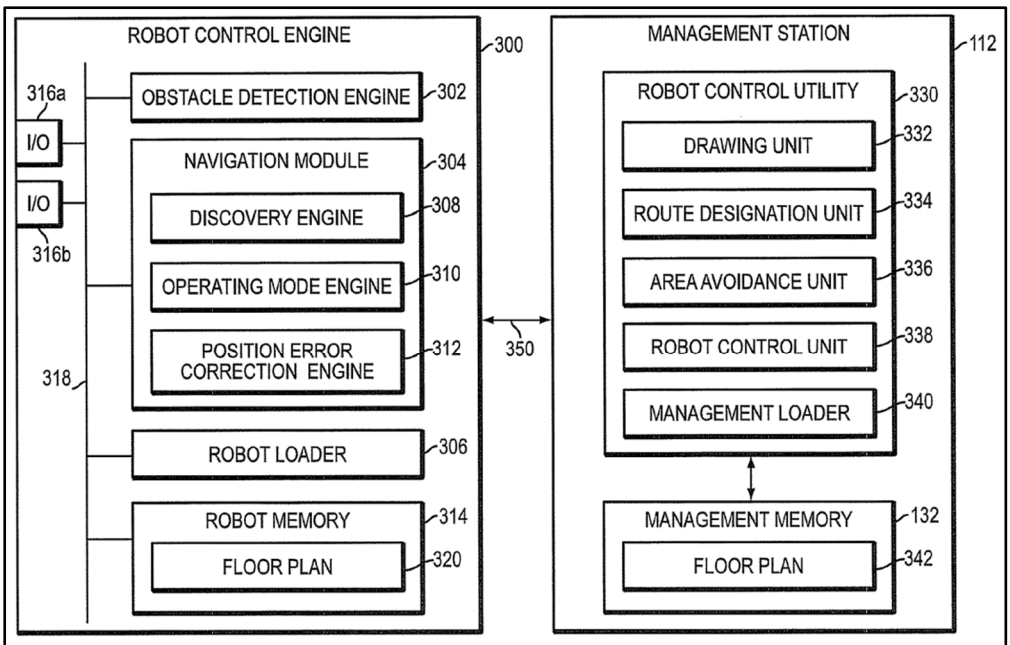

FIG. 3

EX1018, Fig. 3 (showing wireless data connection 350 between the control engine 300 and the management station 112). Bailey further explains that management station 112 may include "a central processing unit (CPU) 130, a memory 132, a display screen 134, one or more input devices, such as keyboard 136 and a mouse 138" that allow a user to interact with robot 102 via a GUI 1400. *Id*., 3:15-22, 7:23-51. "In an embodiment, the user may direct the motion of the robot 102 in real-time using the robot GUI 1400, as a remote control … from the management station 112." *Id*., 16:26-35. Management station 112 thus enables a user to remotely communicate with robot 102 regarding, for *e.g.*, floor plans, navigation commands, cleaning instructions, etc. *Id*., 7:3-12, 7:23-51. Bailey further teaches that "a hand-held remote control unit (not shown) may be operated by the user to direct the motion of the robot 102," emphasizing the portability and remote nature of management station 112. *Id*., 16:26-

35

Bailey's management station 112 thus discloses the "portable electronic device" that is "in electronic communication with" "a controller." A POSA would have been motivated to apply Bailey's management station 112 to the Schnittman/Benzler image-based underwater pool cleaner. Like Schnittman and Benzler, Bailey discloses an autonomous cleaning robot that navigates the cleaning space, such as a swimming pool, using sensor-based perception and an onboard control engine. EX1018, 1:29-32, 3:46-49, 3:51-4:25, 9:48-65, 17:26-29. Bailey's additional teaching of a portable, remote user interface provides a complementary feature that enables user interaction, monitoring, and real-time control—functionalities that would have been naturally desirable to extend to an autonomous pool cleaning robot. Combining Bailey with the Schnittman/Benzler pool cleaning robot would therefore have yielded a predictable and advantageous configuration: an image-guided, autonomous pool cleaning robot whose onboard controller communicates with a portable electronic device (Bailey's management station 112) for user monitoring and control.

As explained by Dr. Reinholtz, a POSA would have recognized the clear advantages of this combination. EX1010, ¶340. Bailey demonstrates that providing a remote management interface allows for convenient user input, remote monitoring, and real-time user control of the robot's navigation and cleaning. These advantages would have been particularly beneficial in the underwater pool cleaning context,

where direct physical access to the robot or its onboard controls is impractical once the robot is submerged. For example, a user might wish to initiate or pause a cleaning cycle, redirect the robot to an uncleaned area, or retrieve diagnostic information if anything goes wrong, all of which are functions that could be conveniently performed through Bailey's management station 112.

Furthermore, Bailey explicitly references multiple iRobot cleaning platforms (*e.g.*, Roomba®, Home Base®, Create®) as suitable and known mobile robot implementations. EX1018, 1:11-16, 3:41-45, 4:53-58. Because iRobot is also the assignee of Schnittman, a POSA would have understood Bailey's and Schnittman's teachings as complementary and compatible technologies arising from the same field of autonomous cleaning robotics. This cross-reference would have reinforced a POSA's expectation that Bailey's management station 112 could be readily applied to Schnittman's image-based cleaning robot, including when adapted for a pool environment as taught by Benzler, particularly since Bailey itself states that the mobile robot 102 may be implemented as a pool cleaning robot. EX1018, 17:26-29.

As explained by Dr. Reinholtz, a POSA would have had a reasonable expectation of success in combining these references. EX1010, ¶342. By 2012, remote communication between a robot and a portable device was routine and well established, using mature technologies such as Bluetooth, wireless network, or infrared interfaces, all of which Bailey discloses. *Id.* Implementing Bailey's

management station 112 into the Schnittman/Benzler device would have required only conventional hardware and software integration, well within the skill of a POSA. *Id.* The necessary adaptations for underwater use, such as waterproofing and sealing, were likewise straightforward engineering tasks known to POSA. *Id.*

Accordingly, Schnittman in view of Benzler, in further view of Bailey makes obvious the controller (microprocessor 245) "in electronic communication with the at least one camera [camera 1190] and a portable electronic device [management station 112]." *Id.*, ¶¶335-343.

(c) Element 3g:

Element 3g is obvious over Schnittman in view of Benzler, in further view of Bailey. *Id.*, ¶¶344-348.

For the reasons explained for element 1g, Schnittman in view of Benzler makes obvious that the controller (microprocessor 245) is "configured to generate, in response to at least one of the captured image …, at least one control signal to cause movement of the body within the swimming pool to, or away from, the first portion of the submerged surface." Section IV.F.4.h.

As explained for element 3f, Bailey further teaches that its management station 112, which is in communication with the onboard control engine 300, allows a user to interact with and control the cleaning robot. EX1018, 7:5-10, 16:26-35 ("the user may direct the motion of the robot 102 in real-time using the robot GUI

1400 [on management station 112], as a remote control"), Figs. 1, 3. A user may direct the robot in real time through management station 112, *i.e.*, the portable electronic device, with those directions being transmitted to the control engine 300 wirelessly and being used to control the robot accordingly. *Id.*, 3:37-40, 7:5-10, 7:23-51, 16:26-35.

Therefore, Schnittman in view of Benzler, in further view of Bailey, discloses that the controller (microprocessor 245) is "configured to generate, in response to at least one of the captured image [image captured by camera 1190] or information from the portable electronic device [management station 112], at least one control signal to cause movement of the body [robot body 31] within the swimming pool to, or away from, the first portion of the submerged surface."

Thus, claim 3 would have been obvious over Schnittman in view of Benzler, in further view of Bailey. EX1010, ¶¶333-348.

H. Ground 2c: Claim 5 Would Have Been Obvious Over Schnittman In View Of Benzler, In Further View Of Hui

1. Independent Claim 5

As shown in Ground 1d, claim 5's preamble, and elements 5a-5c and 5e-5f are substantially the same as claim 1's preamble, and elements 1a-1g. Section IV.D.2 Therefore, claim 5's preamble and elements 5a-5c and 5e-5f are obvious over Schnittman in view of Benzler for the reasons explained in Ground 2a. Section IV.F.4.

Claim 5 additionally recites element 5d, analyzed below.

(a) Element 5d:

Element 5d would have been obvious over Schnittman in view of Benzler, further in view of Hui. EX1010, ¶¶351-355.

Hui's pool cleaning vehicle discloses a chemical dispenser 30 that may be "on, in, or carried by" the vehicle body. Section IV.D.1. A POSA would have been motivated to combine Hui's chemical dispenser with the Schnittman/Benzler image-based underwater pool cleaner to provide an improved automated pool cleaning system capable of performing both mechanical filtration and chemical sanitization. EX1010, ¶352. Like the Schnittman/Benzler device, Hui is also directed to automated pool cleaning robots. EX1019, Abstract, ¶[0001]. When adapting Schnittman's cleaning robot for underwater operation as taught by Benzler, a POSA would know that adding a chemical-dispenser function, specifically for swimming pool environments, is a predictable step. EX1010, ¶352. A POSA would naturally incorporate a known chemical-dispensing element into the Schnittman/Benzler autonomous pool cleaning device because pool sanitation using chemicals, such as chlorine, has been widely known and implemented since before the '766 Patent. *Id.* A POSA would therefore recognize that Hui's chemical dispenser enhances the Schnittman/Benzler system by adding a known and desirable sanitization function through a straightforward modification.

As explained by Dr. Reinholtz, a POSA would have had a reasonable expectation of success in combining these references. EX1010, ¶353. Hui teaches that its chemical dispenser 30 may be mounted externally on the robot body, as illustrated in the embodiments of Figures 8 and 9. EX1019, Figs. 8-9. A POSA could therefore add Hui's chemical dispenser to the exterior of the Schnittman/Benzler device without altering the underlying architecture of the device. Simply mounting the chemical dispenser to the housing would expose the chemical dispenser to the pool water in the same manner as taught by Hui. EX1010, ¶353.

Alternatively, Hui also teaches that the chemical dispenser may be integrated within the robot body. Incorporating the chemical dispenser in this manner with the Schnittman/Benzler device would likewise have been a routine modification well within a POSA's skillset. *Id.*, ¶354. As explained above, at the time of the '766 Patent, pool cleaners incorporating chemical-dispensing components (*e.g.*, chlorine) were well-known and widely used. Thus, adding Hui's chemical dispenser, whether internally or externally, would require only a straightforward application of known methods.

Accordingly, Schnittman in view of Benzler, in further view of Hui renders obvious element 5d's "chemical dispenser [chemical dispenser 30] on, in, or carried by the vehicle body [robot body 31]."

Schnittman in view of Benzler, further in view of Hui renders obvious claim

5. *Id.*, ¶¶349-356.

V. CONCLUSION

Petitioner respectfully requests IPR of claims 1-5 of the ’766 Patent.

VI. MANDATORY NOTICES PURSUANT TO 37 C.F.R. § 42.8(a)(1)

Pursuant to 37 C.F.R. § 42.8(a)(1), the mandatory notices identified in 37 C.F.R. § 42.8(b) are provided below as part of this petition.

A. 37 C.F.R. § 42.8(b)(1): Real Parties-In-Interest

The real parties-in-interest are Wybotics Inc., Wybotics, Co. Ltd., and Tianjin Zhuhui Commercial, Tianjin Wangyuan Industry and Trade, and Ms. Fu Guilan.

B. 37 C.F.R. § 42.8(b)(2): Related Matters

Pursuant to 37 C.F.R. § 42.8(b)(2), Petitioner is aware of the following patent infringement lawsuit that involves the ’766 Patent:

- *Zodiac Pool Systems LLC v. Wybotics, Co. Ltd. f/k/a Tianjin Wangyuan Environmental Protection and Technology Co.,* 2:25-cv-582-JRG-RSP (E. D. Tex. Filed May 23, 2025).
- *Wybotics Inc. v. Zodiac Pool Systems LLC*, 2:25-cv-08526 CAS (AGRx) (C.D. Cal. Filed Sept. 9, 2025).

Petitioner is also concurrently filing Petitions for *Inter Partes* Review of U.S. Patent Nos. the 11,003,191 and 11,880,207, which are related to the ’766 Patent challenged herein.

C. 37 C.F.R. § 42.8(b)(3), (4): Lead And Back-Up Counsel And Service Information

Petitioner provides the following designation of counsel:

Lead Counsel	Back-up Counsel
Matthew W. Johnson (Reg. No. 59,108) mwjohnson@jonesday.com JONES DAY 500 Grant Street, Suite 4500 Pittsburgh, PA 15219 T: 412-394-9524	Joshua R. Nightingale (Reg. No. 67,865) jrnightingale@jonesday.com JONES DAY 500 Grant Street, Suite 4500 Pittsburgh, PA 15219 T: 412-394-7950 Adam J. Cook (Reg. No. 83,160) acook@jonesday.com JONES DAY 500 Grant Street, Suite 4500 Pittsburgh, PA 15219 T: 412-394-7230

Pursuant to 37 C.F.R. § 42.10(b), a Power of Attorney for Petitioner accompanies this petition. Please address all correspondence to lead and back-up counsel at the addresses above. Petitioner also consents to electronic service by email at the email addresses listed above.

Dated: November 25, 2025

Respectfully submitted,

/Joshua R. Nightingale/

Joshua R. Nightingale
Reg. No. 67,865
JONES DAY
500 Grant Street, Suite 4500
Pittsburgh, PA 15219
(412) 394-7950
jrnightingale@jonesday.com

CERTIFICATE OF SERVICE

The undersigned hereby certifies that a copy of the foregoing petition for *Inter Partes* Review of U.S. Patent No. 11,262,766, including all exhibits, was served on November 25, 2025 via Express Mail delivery directed to the attorney of record for the patent at the following address:

John Pratt
Kilpatrick Townsend & Stockton LLP - East Coast
Mailstop: IP Docketing - 22
1100 Peachtree Street
Suite 2800
Atlanta, GA 30309

In addition, a courtesy copy of the foregoing petition for *Inter Partes* Review of U.S. Patent No. 11,262,766, including all exhibits, were served on litigation counsel for Patent Owner Zodiac Pool Systems LLC at the following addresses:

Steven D. Moore
Two Embarcadero Center, Suite 1900
San Francisco, CA 94111
Telephone: (415) 576-0200
Facsimile: (415) 576-0300
Email: smoore@ktslaw.com

Date: November 25, 2025

/*Joshua R. Nightingale*/

Joshua R. Nightingale
Reg. No. 67,865
JONES DAY
500 Grant Street, Suite 4500
Pittsburgh, PA 15219
(412) 394-7950
jrnightingale@jonesday.com

CERTIFICATE OF WORD COUNT UNDER 37 C.F.R. § 42.24(a)

I, the undersigned, do hereby certify that the attached petition contains 13,914 words, as measured by the Word Count function of Microsoft Word. This is less than the limit of 14,000 words as specified by 37 C.F.R. § 42.24(a)(1)(i).

Date: November 25, 2025

/*Joshua R. Nightingale*/

Joshua R. Nightingale
Reg. No. 67,865
JONES DAY
500 Grant Street, Suite 4500
Pittsburgh, PA 15219
(412) 394-7950
jrnightingale@jonesday.com