SubjuGator 2011

***Abstract*—Modern autonomous underwater vehicle (AUV) research is moving towards multi-agent system integration and control. Many university research projects, however, are restricted by cost to obtain even a single AUV platform. An affordable, robust AUV design is presented with special emphasis on modularity and fault tolerance, guided by previous platform iterations and historically successful AUV designs. Modularity is obtained by the loose coupling of typical AUV tasks such as navigation, image processing, and interaction with platform specific hardware. Fault tolerance is integrated from the lowest hardware levels to the vehicle's mission planning framework. Major system design features including electrical infrastructure, mechanical design, and software architecture are presented. Application to the 14th annual AUVSI Robosub competition are addressed.**

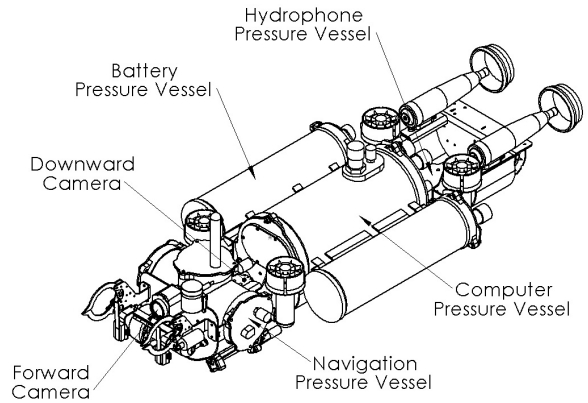

Figure 1: Assembly of SubjuGator 7 Pressure Vessels

I. Introduction

Leveraging 15 years of autonomous underwater vehicle (AUV) development experience at the University of Florida which produced 6 independent platform designs, the SubjuGator family of AUVs has progressed to accommodate advances in sensors, computing, and mission requirements culminating in the design of the current generation SubjuGator 7 vehicle. External design influences include commercially available underwater vehicles which are generally factored into two broad classes: long range, slender, underactuated vehicles and short range, precision movement, fully actuated vehicles. This large difference in capabilities forces the use of multiple vehicles, increasing necessary overhead. SubjuGator 7 is a novel attempt to bridge the gap between the separate design classes, and unify the capabilities of both into a single low cost platform.

The Autonomous Unmanned Vehicle Systems International (AUVSI) and the Office of Naval Research (ONR) are sponsors of the 14th Annual International Autonomous Underwater Vehicle Competition, to be held in San Diego, California at the Space and Naval Warfare Systems Command's (SPAWAR) Transducer Evaluation Center (TRANSDEC) facility July 13th through July 17th, 2011. The seventh generation SubjuGator AUV has evolved to not only meet the new challenges of the annual competition, but to engage in groundbreaking research initiatives.

II. Hardware Design

A primary objective of SubjuGator 7 is the ability to sustain operation after a failure has occurred. To facilitate this goal, the vehicle is designed so that during a failure event (e.g., mechanical or electrical), the faulted system as a whole is still capable of completing a task, or at the very least, safely returning to a recovery point to be removed from the environment. A fault tolerant design motivates a modular system structure, with each module performing specific tasks while communicating with other modules via an ethernet medium. Modules are typically encapsulated in their own pressure vessel, but there is no requirement for all modules to be isolated. Each pressure vessel is designed to meet the desired shallow water depth rating of 150 feet (approx. 45 meters). To achieve this constraint, all pressure vessels in the current configuration are manufactured from 6061-T6 aluminum alloy that is hard-anodized for electrical insulation and corrosion resistance. Interconnections between modules are made using wet-mateable connectors, allowing for easy addition or removal in the work environment. The current configuration of SubjuGator 7 has the following design parameters:

WYBOTICS EX1017
Wybotics v. Zodiac
Page 001

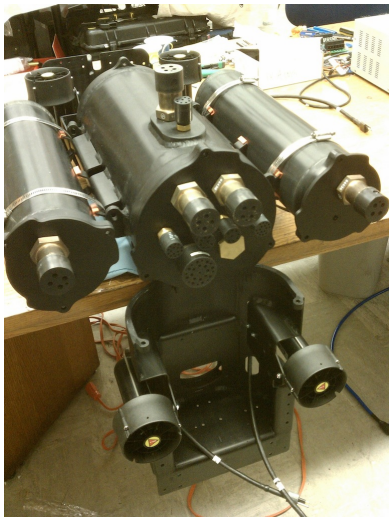

Figure 2: Demonstration of folding weldments which allow access to bulkheads and internal computer pressure vessel components through endcap removal.

- Dry Weight: *110 lb (Trimmed to be 1% positively buoyant in water)*
- Overall Dimensions: *50”x18”x18” (LxWxH)*
- Maximum Forward Thrust: *12 lbf (Bollard Pull)*
- Maximum Vertical Thrust: *16 lbf (Bollard Pull)*
- Maximum Horizontal Thrust: *8 lbf (Bollard Pull)*

To incorporate the different modules into a suitable AUV platform, a 6061-T6 aluminum bottom hull was designed and manufactured. It is split into three folding weldments for easy access to the main pressure vessel or shipping, and acts to both streamline the underside of the AUV, as well as protect it from collision. Figure 2 demonstrates the use of the folding undercarriage/hull. The overall assembly configuration of SubjuGator 7 and each of its pressure vessels is shown in Figure 1. However, the top lid and cowlings that complete the hybrid torpedo/ROV shape are not shown.

All of the hardware components were manufactured over the last year by students on the SubjuGator team and volunteers. A few of the highlights in the the AUV’s manufacturing are CNC machining, welding of all pressure vessels, and marriage of the DVL box to the main frame (Figure 3). Other tools used include a manufacturing laser, and waterjet. Custom endcaps and cabling were made to interface with the commercial thrusters (Figure 4).

Figure 3: Top Left: CNC Machining of an endcap, Top Right: DVL box in the main frame, Bottom Left: Welding of a battery pod, Bottom Right: Waterjet cutting.

Figure 4: Custom cable potting for thrusters

A high level overview of the hardware for each module is presented in the following subsections.

A. Main Pressure Vessel

The main pressure vessel of the SubjuGator 7 AUV contains vehicle specific electrical hardware, and ample connections to environment sensors (e.g., cameras, hydrophone arrays, water temperature sensors, etc). It contains the following major components:

- COTS Intel Xeon Mainboard in Mini-ITX form factor
- COTS Dual 8 port Ethernet Switches
- 8 Motor Control/Power Stage Modules
- Power management and monitoring circuitry

WYBOTICS EX1017
Wybotics v. Zodiac
Page 002

The components inside the main pressure vessel are separated into two groups and are mounted on two independent trays, the computer tray and the rear tray. Each tray is attached to one of the endcaps and can be removed from the pressure vessel by removing the end cap. The computer tray houses the primary computer and its associated power supply. The rear tray houses the power distribution components, the networking hub and the motor control / power stage modules. Figure 5 shows each of the assembled main pressure vessel trays.

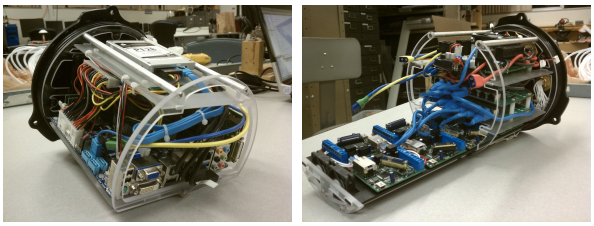

Figure 5: Left: Main Pressure Vessel Computer Tray, Right: Main Pressure Vessel Rear Tray

The primary computer performs environment sensing and mission level tasks. It also allows for the connectivity of USB peripherals, such as cameras and specialized data acquisition devices.

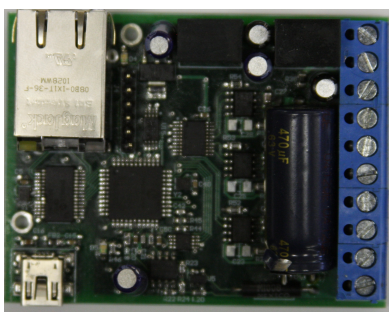

Figure 6: Motor Control/Power Stage Hardware

The motor control / power stage modules, Figure 6, incorporate algorithms and necessary sensor interfaces to safely control brushed or sensored brushless motors at 50V with a maximum load of 10A. Default communication is facilitated through the ethernet bus, however, each motor control/power stage can be configured to emulate a standard serial port over USB. Peak current, maximum current slew, maximum motor voltage, and many other programmable features are accessible via a web browser or a programmatic serial communication protocol. Each motor in the AUV design has a dedicated motor controller. The independence of each controller is used to encapsulate catastrophic failures to a single source instead of inducing multiple failure points, an advantage over previous design iterations.

Power management circuitry, shown in Figure 7, inside the main pressure vessel allows for multiple hot swappable external power supplies to be joined into two primary 16V and 32V rails, transparent to any devices that are powered. The design also preserves the complete isolation of these two rails, segmenting any inductive or heavily switching loads to a confined power space away from sensitive sensors and microelectronics. Furthermore, each power input's present voltage and current are monitored independently, enabling the power controller to shut down in the case of dangerous over current or under voltage situations. Audible commands help to inform the operator of system status when sealed and magnetic hall effect sensors allow for power control of the system without potential leaks through mechanical switches.

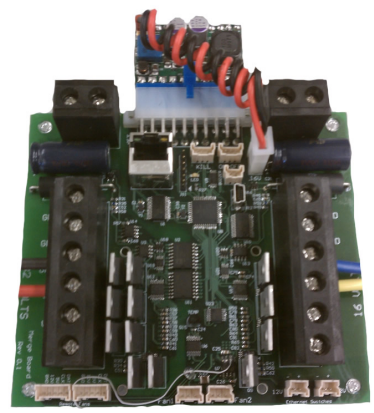

Figure 7: Power Management / Merge Hardware

Since nearly all of the individual modules in SubjuGator 7 were designed to communicate via ethernet, the main pressure vessel also houses the networking hub. The hub consists of two 8 port ethernet switches which allow each module to communicate to local network addresses internally as well as external addresses when SubjuGator 7 is actively tethered.

B. Navigation Pressure Vessel

One of the major contributions of the SubjuGator 7 design is the modularization of the sensors and

WYBOTICS EX1017
Wybotics v. Zodiac
Page 003

components necessary to pilot an underwater vehicle. This modularization is evident both electrically and mechanically. The platform specific components (e.g., motor power stages, platform specific processing, etc.) have been removed, leaving only the core essentials to navigate and control a generic vehicle. Specifically, navigation sensors that are vehicle independent such as an inertial measurement unit (IMU), doppler velocity log (DVL), depth sensor, temperature sensor, and GPS receiver, and the processing capability to unify the data in the form of a navigation and control computer are integrated into the navigation pressure vessel. Since the majority of the sensors incorporated are common to most modern AUV platforms [1], only the custom designed navigation computer is described in more detail.

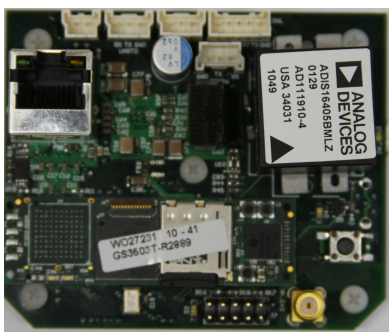

Figure 8: Navigation Computer

The navigation computer, Figure 8, consists of the following major components:

- Gumstix Overo Computer-On-Module (COM) containing a Texas Instruments OMAP3530 application processor at 720MHz
- Altera Cyclone II FPGA with level shifting and processing capabilities
- Analog Devices ADIS16405 9 degree of freedom IMU
- GPS receiver capable of 14 channel tracking and 10Hz update rate
- RS-232 connections to interface sensors
- 10/100BASE-TX Ethernet Communication

The components are combined on a custom printed circuit board (PCB) with a small form factor of 3”x2.5” and weighing less than 2 ounces excluding the GPS antenna which is typically platform specific. Despite its compact size, the board exposes enough processing power and sensor inputs to allow for accurate navigation of the AUV.

Mechanically, all of the sensors and the navigation computer are isolated into a separate pressure vessel shown in Figures 9 and **??** with only two external connections required: 16V power in and ethernet for communication.

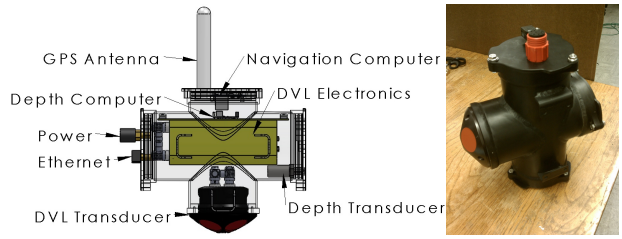

Figure 9: Navigation pressure vessel and internal configuration.

C. Battery Pressure Vessel

The mobile power for the AUV is stored inside two independent battery pressure vessels. Each pod contains a combination of 5Ah and 10Ah, 4 cell lithium polymer battery packs and connects to to the main computer pressure vessel via waterproof cabling. Power regulating and battery monitor circuitry is included inside each battery pressure vessel to protect against low voltage and over current situations. Audible commands help to inform the operator of battery status when sealed and magnetic hall effect sensors allow for power control of the pod without potential leaks through mechanical switches.

D. Camera Pressure Vessel

Machine vision is incorporated into the AUV through the use of independently housed Point Grey

Figure 10: Battery pod pressure vessel and internal configuration.

WYBOTICS EX1017
Wybotics v. Zodiac
Page 004

machine vision cameras. The cameras are affordable and offer an easy to use USB interface to the video stream. The decision to design a separate pressure vessel for each camera is beneficial since both the number and location of cameras is freely adaptable up to the limit of the number of USB connections exposed by the main hull, presently 6. This can be increased, however, through the use of an external hub, discussed in a later section. Figure 11 shows a single camera assembled camera housing. The configuration in Figure 1 demonstrates the positioning of two cameras, one forward facing and one downward facing.

Figure 11: Camera pressure vessel with assembled Point Grey camera.

E. Hydrophone Pressure Vessel

The ability to track a point source of sound in the water is encapsulated into the hydrophone pressure vessel. It contains a custom designed hydrophone amplification and filtering board, Figure 12, necessary power regulation, and USB communication. The hardware is capable of tracking multiple acoustic sources simultaneously provided they are at different frequency.

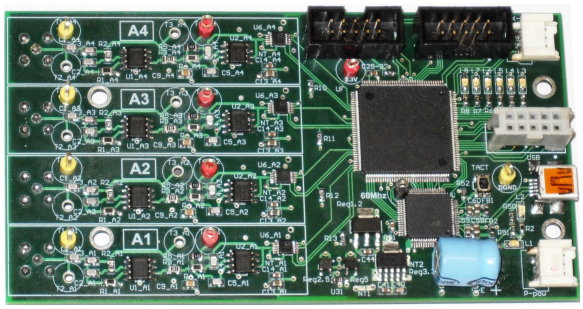

Figure 12: Hydrophone Amplification/Processing Hardware

Figure 13: Left: Ball dropper, Middle: Torpedo shooter, Right: Manipulator.

F. External Expansion Hub

An external expansion hub may be incorporated to allow for reasonable expansion. It is responsible for exposing necessary serial, USB, or ethernet ports to additional sensors, devices or vehicles, and multiplexing the data streams onto a single ethernet connection for communication with other system modules.

G. External Actuators

SubjuGator 7 has integrated three types of independently operated actuator mechanisms into its design. The mechanisms can be used to complete specific tasks in its environment and are controlled using electric solenoids. Currently the vehicle's capabilities include a single, multi-fire ball dropper, two single-fire torpedos, and two infinite-use manipulator claws. SubjuGator 7's configuration supports up to 10 independent actuators. Each of the currently integrated mechanisms are shown in Figure 13.

III. Software Design

In modern robotic development, many design options exist for software implementation. Major pushes toward multi-agent interoperability have spawned the necessity for seamless communication over varying mediums including shared memory, LAN, or even WAN. Two major communication standards used at the University of Florida are the Joint Architecture for Unmanned Systems (JAUS), and Data Distribution Services (DDS). These schemes are not directly compatible, however, the AUV must still be able to interoperate with other vehicles or control stations that may be utilizing either standard with minimal extra development time. To overcome this challenge, the standalone functionality of the AUV has been designed independently of any communication scheme. A sample software module, also referred to as a component, is presented in Figure 14.

WYBOTICS EX1017
Wybotics v. Zodiac
Page 005

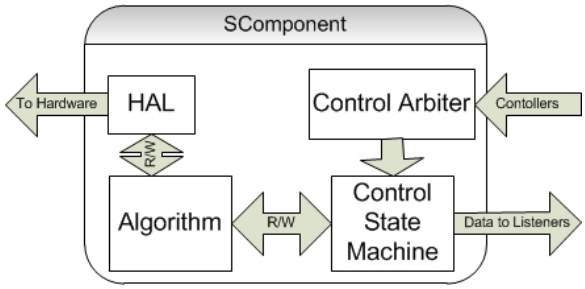

Figure 14: Sample Software Component

By utilizing standard object oriented coding practices, a loosely coupled behavior-communication relationship is established allowing for multiple simultaneous communication protocols with external nodes. For instance, to make a sample component publish its data in the DDS framework, the only necessary code is DDS translation to and from the generic SComponent interface.

Figure 14 also contains a hardware application layer (HAL) block. This represents the platform specific (operating system specific) code necessary to communicate with hardware on the AUV. For example, if a sensor is being changed from a serial RS-232 device to one using an SPI or I2C protocol, then the developer is only responsible for implementing a new HAL block and plugging it into the existing component. Overall component functionalities including component specific algorithms, behavior logic, etc., are abstracted above the hardware allowing for expedient platform changes - even to a different AUV (e.g., SubjuGator 6). The remainder of this section presents the major software components implemented in the AUV, illustrated in Figure 15.

A. Primitive Driver

The primitive driver component (utilizing nomenclature from the JAUS specification [2]) is responsible for translating a generic output request onto the AUV. For instance, a desired force and moment about the center of mass of the vehicle are decoupled into the 8 desired normalized forces that are sent to the motor control modules, or a request to move a manipulator is packaged and sent to the hardware actuator board. Settings files that describe thruster count and orientation, as well as environment manipulating payloads, allow for zero code changes for a new load out or even a different AUV. Although the primitive driver component is

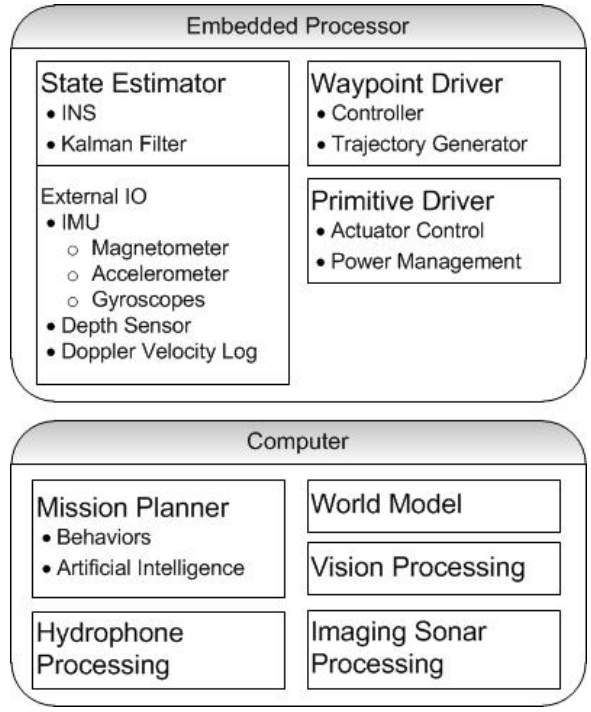

Figure 15: Software High Level Block Diagram

configuration dependent, it is abstracted to the most generic level possible that retains enough information to perform the desired interaction. The hardware specific communication is still done through a HAL block as described previously. The tiered abstraction of the platform hardware/configuration may seem redundant at first, but given the multitude of hardware that is available to perform the same task (e.g., motor power stage modules for the thrusters), the merits quickly appear.

B. State Estimator

The state estimation component is responsible for acquiring navigation specific sensory data, and encapsulating it into a generic vehicle pose data object referenced in the locally fixed North-East-Down (NED) frame.

To achieve this, an Indirect Unscented Kalman filter (Figure 16) estimates the error in position, velocity, and orientation quaternion generated by the inertial navigation system (INS). The INS high speed sensory inputs ($\sim$205Hz) include three-axis magnetometer, accelerometer, and gyroscopic inputs. Low speed reference sensors are used to generate the input error signals for the Kalman filter: DVL 3-axis velocity, GPS, depth, and a filtered tilt/magnetometer/gravity based estimation of

WYBOTICS EX1017
Wybotics v. Zodiac
Page 006

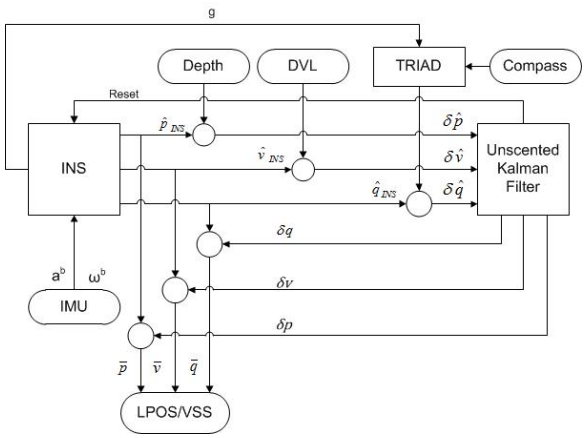

Figure 16: Indirect Unscented Kalman Filter

attitude. In the event of a sensor failure, the state estimation module attempts to continue providing a best estimate of vehicle pose, however, it notifies the system of the reduced capacity.

C. Waypoint Driver

The waypoint driver component contains two primary workers. The first worker is a planning algorithm that produces 4th order continuous trajectories given vehicle constraints and environmental obstacles. Vehicle constraints are presented to the trajectory generator as a dynamic obstacle that remains in a fixed location relative to the AUV body frame. Current work is being done to identify when a thruster failure has occurred, and dynamically recalculate the vehicle constraint parameters ensuring intelligent trajectories are built. The second worker is a trajectory tracking controller which implements a nonlinear multilayer neural network feed-forward, and robust integral of the sign of the error (RISE) feedback control structure [3]. All feedback is provided via the state estimator component, and the output is a generic desired force and moment applied to the AUV.

D. World Model

The world model component is a knowledge store for the AUV software framework. Comprised of a database populated with vector based information about static and dynamic environmental obstacles, the world model is available for subscription by any component. The two primary components using the world model are the waypoint driver, and the mission planner.

E. Mission Planner

The mission planner component is responsible for high level arbitration of the AUV's actions. It presently utilizes mission scripts that detail a list of tasks to be performed. To perform these tasks, behaviors are scripted, and each behavior can have a scripted mini-behavior, recursively. There is no restriction placed on a behavior relating to how it performs its task, however, any desired action a behavior produces is screened by the primary mission planner arbiter to ensure a larger mission goal is not being sacrificed, such as a minimum or maximum depth constraint.

F. Vision Processing

The computer vision system on SubjuGator 7 is capable of generating feedback control signals utilizing both two dimensional and three dimensional feature information from complicated scenes. Because underwater environments can pose many types of challenges for object identification such as varying luminosities, sunlight dissipation, particle noise, and occlusions, combinations of novel normalization, filtering techniques and color space models are developed to robustly extract relevant target information from the environment in real-time. Feature and contour-based descriptors allow for accurate and robust target identification between frames.

After identification, target tracking algorithms ensure that objects of interest are maintained within the field of view of the camera during servoing (displayed in Figure 17). SubjuGator 7 has developed the ability to track multiple stationary or moving objects at one time using a multi-tiered control structure which includes vehicle trajectory planning, image-based identification, tracking and servo control. This problem is motivated by the hypothesis that multiple targets can be maintained within the field of view of an autonomous imaging system through actuation of the vehicle's position and orientation by analyzing constraints in dispersion covariance, quality of service, relative distance of targets and the system's dynamics.

In addition to persistently tracking targets of interest, two-dimensional visual servoing techniques allow for vehicle navigation with respect to the target (e.g, docking, object avoidance, surveying maneuvers). When multi-point feature information

WYBOTICS EX1017
Wybotics v. Zodiac
Page 007

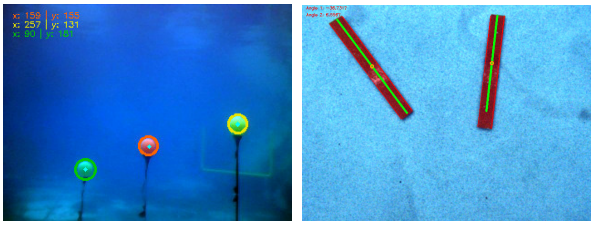

Figure 17: Example vision processing algorithm result for buoy and pipe tasks.

is available for the object in the frame, nonlinear homography-based control methods [4], [5] are used to identify the Euclidean position, orientation and velocity of targets relative to the camera as they are being tracked. The Euclidean position and orientation information obtained by the vision system (most notedly, normal distance to the target) can be used as additional feedback in visual servoing. Internal camera calibration and distortion parameters are obtained using [6].

IV. Conclusions

SubjuGator 7 is a hybrid, modular AUV design suitable for many research tasks at the University of Florida. This relatively low cost AUV is easily maintained and deployed by two people. Future work includes further development of the software and control architecture, deployment of the software to multiple vehicles (SubjuGator 6 and SubjuGator 7), and underwater multi-agent cooperation.

V. Acknowledgements

The University of Florida SubjuGator team would like to thank everyone who has supported us throughout the year including the University of Florida's Electrical and Mechanical Engineering departments. We would like to extend an appreciative thank you to our advisor, Dr. Eric Schwartz, without whom this project would not be possible, and to Dr. Anthony Arroyo and the Machine Intelligence Laboratory at UF. We would also like to thank each of our corporate sponsors for graciously assisting with both monitary and product donations:

- **Tier 1 Sponsors**: JD^2
- **Tier 2 Sponsors**: Gator Engineering, Harris, SEACON, Lockheed Martin, Advanced Circuits, Digikey
- **Tier 3 Sponsors**: IEEE, Altera, DDS Solidworks, SubConn, YomDom, CPI

The latest SubjuGator 7 developments can be found at our webpage www.subjugator.org.

References

[1] P. Miller, J. Farrell, Y. Zhao, and V. Djapic, "Autonomous underwater vehicle navigation," *IEEE Journal of Oceanic Engineering*, vol. 35, no. 3, pp. 663–678, July 2010.

[2] *Joint Architecture for Unmanned Systems (JAUS), Reference Architecture Specification Version 3.3*, June 2007, vol. II.

[3] N. Fischer, S. Bhasin, and W. Dixon, "Nonlinear control of an autonomous underwater vehicle: A RISE-based approach," in *IEEE Proc American Control Conference*, 2011, to appear.

[4] A. Dani, S. Velat, C. Crane, N. Gans, and W. Dixon, "Experimental results for image-based pose and velocity estimation," in *IEEE Proc. International Conference on Control Applications*, Sept. 2008, pp. 1159–1164.

[5] N. Gans, A. Dani, and W. Dixon, "Visual servoing to an arbitrary pose with respect to an object given a single known length," in *IEEE Proc. American Control Conference*, June 2008, pp. 1261–1267.

[6] Z. Zhang, "Flexible camera calibration by viewing a plane from unknown orientations," in *IEEE Proc. International Conference on Computer Vision*, vol. 1, 1999, pp. 666–673.

WYBOTICS EX1017
Wybotics v. Zodiac
Page 008