Alexis A. Smith, Bar No. 274429
asmith@jonesday.com
JONES DAY
555 South Flower Street
Fiftieth Floor
Los Angeles, California 90071.2452
Telephone: (213) 489-3939
Facsimile: (213) 243-2539

Ryan B. McCrum (admitted *pro hac vice*)
rbmccrum@jonesday.com
Susan M. Gerber (admitted *pro hac vice*)
smgerber@jonesday.com
JONES DAY
901 Lakeside Avenue
Cleveland, Ohio 44114.7231
Telephone: (202) 879-3939
Facsimile: (202) 626-1700

Attorneys for Plaintiffs
WYBOTICS INC. and WYBOTICS, CO. LTD.

UNITED STATES DISTRICT COURT

CENTRAL DISTRICT OF CALIFORNIA

WYBOTICS INC. and WYBOTICS, CO. LTD., Plaintiffs, v. ZODIAC POOL SYSTEMS LLC and ZODIAC POOL CARE EUROPE, Defendants.	Case No. **2:25–cv–08526 CAS (AGRx)** **FIRST AMENDED COMPLAINT FOR DECLARATORY JUDGMENT OF NONINFRINGEMENT AND INVALIDITY OF PATENTS** **DEMAND FOR JURY TRIAL**

Patent Owner Zodiac Pool Systems LLC
Exhibit 2004 - Page 1 of 31

Plaintiffs Wybotics Inc. ("Wybotics CA") and Wybotics, Co. Ltd. ("Wybotics China") (collectively "Wybotics" or "Plaintiffs") for their Complaint against Defendants Zodiac Pool Systems LLC ("Zodiac CA") and Zodiac Pool Care Europe ("Zodiac Europe") (collectively "Zodiac" or "Defendants"), allege as follows:

INTRODUCTION

1. This is an action by Wybotics against Zodiac for declaratory judgment of non-infringement of U.S. Patent Nos. 8,393,029 (the "'029 Patent"), 8,393,031 (the "'031 Patent), 11,808207 (the "'207 Patent), 11,262,766 (the "'766 Patent), and 11,003,191 (the "'191 Patent) (collectively the "Patents-in-Suit") and invalidity of the '029 and '031 Patents arising under the Declaratory Judgment Act 28 U.S.C. §§ 2201-2202, and the patent laws of the United States, including Title 35 of the United States Code.

2. The Patents-in-Suit relate to a device and method for cleaning a submerged surface, and in particular, a device and method for cleaning swimming pools.

3. The '029 Patent is titled "APPARATUS FOR CLEANING A SUBMERGED SURFACE INCLUDING A BRUSHING DEVICE DRIVEN BY MEMBERS FOR DRIVING THE APPARATUS ON THE SUBMERGED SURFACE," lists inventors Philippe Pichon and Emmanuel Mastio, and issued on March 12, 2013. A copy of the '029 Patent is attached hereto as Exhibit 1.

4. The '031 Patent is titled "APPARATUS FOR CLEANING A SUBMERGED SURFACE WITH REMOVABLE FILTRATION DEVICE," lists inventors Philippe Pichon and Emmanuel Mastio, and issued on March 12, 2013. A copy of the '031 Patent is attached hereto as Exhibit 2.

5. The '207 Patent is titled "POOL CLEANING SYSTEM AND METHOD TO AUTOMATICALLY CLEAN SURFACES OF A POOL USING IMAGES FROM A CAMERA," lists inventors Kameshwar Durvasula and William

Londono Correa, and issued on January 23, 2024. A copy of the '207 Patent is attached hereto as Exhibit 3.

6. The '766 Patent is titled "POOL CLEANING SYSTEM AND METHOD TO AUTOMATICALLY CLEAN SURFACES OF A POOL USING IMAGES FROM A CAMERA," lists inventors Kameshwar Durvasula and William Londono Correa, and issued on March 1, 2022. A copy of the '766 Patent is attached hereto as Exhibit 4.

7. The '191 Patent is titled "POOL CLEANING SYSTEM AND METHOD TO AUTOMATICALLY CLEAN SURFACES OF A POOL USING IMAGES FROM A CAMERA," lists inventors Kameshwar Durvasula and William Londono Correa, and issued on May 11, 2021. A copy of the '191 Patent is attached hereto as Exhibit 5.

8. Wybotics China designs and manufactures a line of robotic pool cleaners, including Wybot C1, Wybot C1 Pro, Wybot C1 Max, Wybot C2 Vision, Wybot M2, Wybot S2, Wybot S2 Pro, Wybot S2 Solar, Wybot S2 Solar Vision, AquaClean, Winny HJ3172, Bugson, Bugson Plus, and Aquamoto Scrubo Pro (the "Accused Products"). Wybotics China also sells certain of the accused products, namely the Wybot C1, Wybot C1 Pro, Wybot C1 Max, Wybot C2 Vision, Wybot M2, Wybot S2, Wybot S2 Pro, Wybot S2 Solar, Wybot S2 Solar Vision, and the AquaClean, on the website www.wybotpool.com. Furthermore, Wybotics China operates a store on Amazon where it sells or has sold certain of the accused products, namely the Wybot C1, Wybot C1 Pro, Wybot C1 Max, Wybot C2 Vision, Wybot S2, Wybot S2 Solar, and Wybot S2 Solar Vision.

9. Wybotics China sells the Accused Products to Wybotics CA.

10. Wybotics CA then sells the Accused Products to distributors in the United States. Wybotics CA is also involved in the marketing and distribution of the Accused Products in the United States. Wybotics CA's role includes negotiations and sales of the Accused Products to US distributors, and management

of warehousing and distribution of the Accused Products in the US. Wybotics CA also provides customer support for the Accused Products. Wybotics CA is also involved in the research and development of Wybotics China.

11. Wybotics seeks a declaration that it and its Accused Products do not infringe any valid and enforceable claim of the Patents-in-Suit.

THE PARTIES

12. Plaintiff Wybotics CA is a California corporation with its principal place of business at 1108 S. Baldwin Ave, Suite 208, Arcadia, California 91007.

13. Plaintiff Wybotics China is a foreign company organized and existing under the laws of China with its principal place of business at No. 30, 4th of Zhong Nan Street, West-Zone, TEDA, Tianjin, China.

14. Wybotics CA is a wholly owned subsidiary of Wybotics China.

15. Defendant Zodiac Europe is a French company with its corporate headquarters located at ZA La Balme, 31450 Belberaud, France. Zodiac Europe contends it owns by assignment all right, title, and interest in, and has standing to sue for infringement of, the ’029 and ’031 Patents.

16. Defendant Zodiac CA is a Delaware limited liability company that lists its principal place of business at 2882 Whiptail Loop # 100, Carlsbad, California 92010. Zodiac CA contends it holds an exclusive license from Zodiac Europe, granting it all substantial rights in, and has standing to sue for infringement of, the ’029 and ’031 Patents. Zodiac CA contends it owns by assignment all right, title, and interest in, and has standing to sue for infringement of the ’207, ’766, and ’191 Patents.

JURISDICTION AND VENUE

A. This Court has Subject Matter Jurisdiction

17. This action arises under the Federal Declaratory Judgment Act, 28 U.S.C. § 2201 *et seq*., and under the patent laws of the United States, 35 U.S.C. § 1 *et seq*.

18. The Court has subject matter jurisdiction over the claims alleged in this action under 28 U.S.C. §§ 1331, 1338(a), and 2201(a), because this action involves claims arising under the patent laws of the United States, 35 U.S.C. § 1 *et seq*.

19. Off and on since 2016, Wybotics and Zodiac have been involved in disputes, including several legal actions, concerning the infringement and validity of the Patents-in-Suit. In February 2016, Zodiac sent a cease-and-desist letter to Wybotics China using its former name of Tianjin Wangyuan Environmental Protection and Technology Co., Ltd., alleging that Wybotics China infringed the '029 Patent with its Winny line of products, which includes certain of the Accused Products. A true and correct copy of Zodiac's 2016 letter is attached hereto as Exhibit 6 to this Amended Complaint.

20. Zodiac initiated a lawsuit in this District on July 29, 2022 against Wybotics China (doing business as Winny Pool Cleaner and formerly known as Tianjin Wangyuan Environmental Protection and Technology Co., Ltd.) and its former United States customer Tianjin Pool & Spa Corp., alleging that those parties infringed the '029 and '031 Patents in a prior case captioned *Zodiac Pool Care Europe v. Wybotics, Co. Ltd.*, Civil Action No. 2:22-cv-5271 ("Prior California Lawsuit"). The accused products in that action included the Winny HJ3172 Bugson, Bugson Plus, and Aquamoto Scrubo Pro and other similar pool cleaners manufactured by Wybotics China under private labels. A true and correct copy of Zodiac's complaint in its Prior California Lawsuit against Wybotics is attached hereto as Exhibit 7 to this Amended Complaint.

21. Zodiac also filed a complaint at the International Trade Commission ("ITC") on July 29, 2022, alleging that Wybotics China and its United States customer infringed the '029 and '031 Patents. The ITC instituted an investigation as to the alleged infringement in August 2022, in Investigation No. 337-TA-1326 ("Prior ITC Case"). The accused products in that investigation also included the

Winny HJ3172 Bugson, Bugson Plus, and Aquamoto Scrubo Pro and other similar pool cleaners manufactured by Wybotics under private labels. A true and correct copy of Zodiac's complaint in its Prior ITC Case is attached hereto as Exhibit 8 to this Amended Complaint.

22. After settling with other parties named in the investigation, on February 21, 2023, Zodiac unilaterally withdrew its complaint and moved to terminate the Prior ITC Case. Its motion was granted by the Administrative Law Judge the same day.

23. On March 29, 2023, Zodiac filed its Notice of Voluntary Dismissal in its Prior California Lawsuit (ECF No. 24).

24. On June 4, 2024, Zodiac, by and through counsel, Steven Moore, sent Wybotics CA and Wybotics China a cease-and-desist letter alleging infringement of Zodiac's '207, '766, and '191 Patents by Wybotics' pool cleaners containing "Vision Tech," including the Wybot M2. A true and correct copy of that letter is attached hereto as Exhibit 9 to this Amended Complaint.

25. Then on May 23, 2025, Zodiac initiated a new lawsuit in the Eastern District of Texas, Civil Action No. 2:25-cv-582 (the "EDTX Lawsuit"). Zodiac named Wybotics China as the sole defendant, alleging again that Wybotics China infringes the '029 and '031 Patents. The accused products included many of those identified as the "Accused Products" in paragraph 8 of this Complaint. A true and correct copy of Zodiac's complaint in the EDTX Lawsuit is attached as Exhibit 10 to this Amended Complaint.

26. On June 2, 2025, Zodiac again, by and through counsel, Steven Moore, sent Wybotics CA and Wybotics China a follow up letter regarding the alleged infringement referenced in the June 4, 2024 letter. A true and correct copy of that letter is attached hereto as Exhibit 11 to this Amended Complaint.

27. Then on September 22, 2025, Zodiac filed an amended complaint in the EDTX Lawsuit. Zodiac, in addition to its original allegations, alleged that

Wybotics China infringed the ’207, ’766, and ’191 Patents. The accused products are the same as those identified as the “Accused Products” in paragraph 8 of this Complaint. A true and correct copy of Zodiac’s amended complaint in the EDTX Lawsuit is attached as Exhibit 12 to this Amended Complaint.

28. As set forth above and in light of Zodiac’s continued assertions of the Patents-in-Suit against the Wybotics entities, an actual justiciable controversy exists under 28 U.S.C. §§ 2201-2201 between Wybotics and Zodiac as to whether the claims of the Patents-in-Suit are valid and infringed by any Wybotics Accused Products.

B. This Court has Personal Jurisdiction Over the Zodiac Defendants

29. The Court has personal jurisdiction over Zodiac CA, because it maintains a principal place of business in the State of California and therefore resides in California.

30. This Court also has personal jurisdiction over both Zodiac Defendants pursuant to due process and/or the California Long Arm Statute because of Defendants’ continuous and systematic contacts in this District as well as Defendants’ licensing and enforcement of the Patents-in-Suit in California.

31. Defendants have purposefully availed themselves of the benefits of this District by initiating a Prior California Lawsuit in this District against Wybotics China (doing business as Winny Pool Cleaner and formerly known as Tianjin Wangyuan Environmental Protection and Technology Co., Ltd.) and its former United States customer Tianjin Pool & Spa Corp., alleging that those parties infringed the ’029 and ’031 Patents. *See* Exhibit 7.

32. Defendants have purposefully directed their enforcement activities at this District, including by alleging infringement of the ’207, ’766, and ’191 Patents by Wybotics CA having its principal place of business in this District (*see* Exhibits 9, 11 & 12), and by alleging infringement of the ’029 and ’031 Patents by two additional companies having principal places of business and/or operations in this

District, including at least: Tianjin Pool & Spa Corp. (a California corporation, former customer of Wybotics China, and located in Commerce, California) and Aiper Inc. (another California corporation located in Los Angeles, California, and customer of Wybotics China)(*see* Exhibit 7 at 1-2).

33. Defendants' outside counsel, Steven Moore, sent a cease-and-desist letter dated June 4, 2024 to Wybotics CA and Wybotics China alleging infringement of the '207, '766, and '191 Patents. On information and belief, Steven Moore is a resident of California with a business address in San Francisco, California as listed on the June 4, 2024 letter. *See* Exhibit 9.

34. Defendants' outside counsel in California, Steven Moore, also sent a follow up letter on June 2, 2025 to Wybotics' counsel regarding Wybotics' alleged infringement of Zodiac's robotic pool cleaner-related U.S. Patents. *See* Exhibit 11.

35. Defendants have purposefully directed their licensing activities at this District. According to Zodiac's complaint in its Prior ITC Case, Zodiac Europe licensed the '029 and '031 Patents to Zodiac CA, a resident of this state. *See* Exhibit 8 at p. 22, 26.

36. The claims asserted herein arise out of or relate to activity by Defendants within and directed at this forum. Defendants' minimum contacts with this forum allow this Court to exercise personal jurisdiction over Defendants and do not offend any traditional notions of fair play and substantial justice.

C. Venue is Proper in this District

37. Venue in this District is proper under 28 U.S.C. §§ 1391(b) and (c) at least because Defendants are subject to personal jurisdiction in this District, a substantial part of the events giving rise to the claims occurred in this District, and Defendants purposefully directed their activities to this District.

38. Venue in this District is also proper because Zodiac Europe is a foreign company who may be sued in any judicial district under 28 U.S.C. § 1391(c).

COUNT ONE: DECLARATORY JUDGMENT OF NON-INFRINGEMENT OF THE '029 PATENT

39. Wybotics repeats and realleges each and every allegation contained in the preceding paragraphs as though fully set forth herein.

40. Zodiac Europe contends that it owns by assignment all right, title, and interest in, and has standing to sue for infringement of the '029 Patent.

41. Zodiac CA contends that it holds an exclusive license with all substantial rights in, and has standing to sue for infringement of the '029 Patent.

42. Zodiac contends that the claims of the '029 Patent are valid and enforceable, and that Wybotics directly and/or indirectly infringes one or more claims of the '029 Patent by making, using, selling, offering to sell, and/or importing into the United States the Accused Products in violation of 35 U.S.C. § 271.

43. Wybotics contends that it does not infringe any valid and enforceable claim of the '029 Patent under any theory, thus Wybotics has not committed any act in violation of 35 U.S.C. § 271.

44. An actual justiciable controversy therefore exists between Wybotics and Zodiac regarding whether Wybotics has infringed any valid and enforceable claim of the '029 Patent.

45. A judicial declaration is necessary and appropriate so that Wybotics may ascertain its rights regarding its Accused Products and the '029 Patent.

46. Pursuant to 28 U.S.C. §§ 2201, *et seq*., Wybotics is entitled to a declaratory judgment that Wybotics has not and does not infringe, either directly or indirectly, any valid and enforceable claim of the '029 Patent under 35 U.S.C. § 271(a), (b), or (c).

COUNT TWO: DECLARATORY JUDGMENT OF INVALIDITY OF THE ’029 PATENT

47. Wybotics repeats and realleges each and every allegation contained in the preceding paragraphs as though fully set forth herein.

48. Zodiac contends that the claims of the ’029 Patent are valid.

49. Wybotics contends that the claims of the ’029 Patent are invalid at least for failure to comply with the requirements for patentability of Title 35 of the U.S. Code, including but not limited to 35 U.S.C. §§ 102, 103, and 112.

50. For example, the claims of the ’029 Patent are anticipated under 35 U.S.C. § 102 and/or rendered obvious under 35 U.S.C. § 103 in view of the prior art of record in the prosecution of the ’029 Patent, all other related U.S. and foreign applications, admissions in the ’029 Patent and/or its file history, all prior art asserted in the Prior ITC Case, including at least U.S. Patent No. 5,617,600 (“Frattini”); U.S. Publication No. 2006/0059637 (“Fridman”); U.S. Publication No. 2007/0028405 (“Garti”); U.S. Patent No. 5,569,371 (“Perling”); U.S. Publication No. 2005/0181968 (“Policicchio”); U.S. Patent No. 3,947,912 (“Michaels”); U.S. Patent No. 220,413 (“Pittman”); U.S. Patent No. 3,097,383 (“Taylor”); U.S. Patent No. 3,822,754 (“Henkin”); U.S. Patent No. 3,959,922 (“Leistikow”); U.S. Patent No. 5,239,721 (“Zahuranec”); U.S. Patent No. 5,771,987 (“Marbach”); U.S. Patent No. 6,003,184 (“Campbell”); European Publication No. EP1688562A2 (“Pareti”); and Japanese Patent No. JP2977663B2 (“Sakamoto”), either alone or in combination with each other.

51. As another example, the claims of the ’029 Patent are invalid under 35 U.S.C. § 112 because the ’029 Patent does not contain sufficient written description of the inventions set forth in the claims and the ’029 Patent does not contain an enabling disclosure.

52. An actual justiciable controversy therefore exists between Wybotics and Zodiac regarding whether or not any claims of the ’029 Patent are valid.

53. A judicial declaration is necessary and appropriate so that Wybotics may ascertain its rights regarding the validity of the ’029 Patent.

54. Pursuant to 28 U.S.C. §§ 2201, *et seq*., Wybotics is entitled to a declaratory judgment that the claims of the ’029 Patent are invalid under one or more provisions of 35 U.S.C. §§ 102, 103, and/or 112.

COUNT THREE: DECLARATORY JUDGMENT OF NON-INFRINGEMENT OF THE ’031 PATENT

55. Wybotics repeats and realleges each and every allegation contained in the preceding paragraphs as though fully set forth herein.

56. Zodiac Europe contends that it owns by assignment all right, title, and interest in, and has standing to sue for infringement of the ’031 Patent.

57. Zodiac CA contends that it holds an exclusive license with all substantial rights in, and has standing to sue for infringement of the ’031 Patent.

58. Zodiac contends that the claims of the ’031 Patent are valid and enforceable, and that Wybotics directly and/or indirectly infringes one or more claims of the ’031 Patent by making, using, selling, offering to sell, and/or importing into the United States the Accused Products in violation of 35 U.S.C. § 271.

59. Wybotics contends that it does not infringe any valid and enforceable claim of the ’031 Patent under any theory, thus Wybotics has not committed any act in violation of 35 U.S.C. § 271.

60. An actual justiciable controversy therefore exists between Wybotics and Zodiac regarding whether Wybotics has infringed any valid and enforceable claim of the ’031 Patent.

61. A judicial declaration is necessary and appropriate so that Wybotics may ascertain its rights regarding its Accused Products and the ’031 Patent.

62. Pursuant to 28 U.S.C. §§ 2201, *et seq*., Wybotics is entitled to a declaratory judgment that Wybotics has not and does not infringe, either directly or

indirectly, any valid and enforceable claim of the ’031 Patent under 35 U.S.C. § 271(a), (b), or (c).

COUNT FOUR: DECLARATORY JUDGMENT OF INVALIDITY OF THE ’031 PATENT

63. Wybotics repeats and realleges each and every allegation contained in the preceding paragraphs as though fully set forth herein.

64. Zodiac contends that the claims of the ’031 Patent are valid.

65. Wybotics contends that the claims of the ’031 Patent are invalid at least for failure to comply with the requirements for patentability of Title 35 of the U.S. Code, including but not limited to 35 U.S.C. §§ 102, 103, and 112.

66. For example, the claims of the ’031 Patent are anticipated under 35 U.S.C. § 102 and/or rendered obvious under 35 U.S.C. § 103 in view of the prior art of record in the prosecution of the ’031 Patent, all other related U.S. and foreign applications, admissions in the ’031 Patent and/or its file history, all prior art asserted in the Prior ITC Case, including at least U.S. Publication No. 2008/0099409 (“Gorelik”); U.S. Patent No. 4,064,586 (“Caron”); Technical Manual for Expert Pro pool cleaning robot (“Expert Pro”); U.S. Patent No. 6,013,178 (“Strano”); U.S. Patent No. 6,409,916 (“Zelas”); U.S. Publication No. 2002/0104790 (“Lincke”); and U.S. Publication No. 2005/0279683 (“Erlich”), either alone or in combination with each other.

67. As another example, the claims of the ’031 Patent are invalid under 35 U.S.C. § 112 because the ’031 Patent does not contain sufficient written description of the inventions set forth in the claims and the ’031 Patent does not contain an enabling disclosure.

68. An actual justiciable controversy therefore exists between Wybotics and Zodiac regarding whether or not any claims of the ’031 Patent are valid.

69. A judicial declaration is necessary and appropriate so that Wybotics may ascertain its rights regarding the validity of the ’031 Patent.

70. Pursuant to 28 U.S.C. §§ 2201, *et seq*., Wybotics is entitled to a declaratory judgment that the claims of the ’031 Patent are invalid under one or more provisions of 35 U.S.C. §§ 102, 103, and/or 112.

COUNT FIVE: DECLARATORY JUDGMENT OF NON-INFRINGEMENT OF THE ’207 PATENT

71. Wybotics repeats and realleges each and every allegation contained in the preceding paragraphs as though fully set forth herein.

72. Zodiac CA contends that it owns by assignment all right, title, and interest in, and has standing to sue for infringement of the ’207 Patent.

73. Zodiac contends that the claims of the ’207 Patent are valid and enforceable, and that Wybotics directly and/or indirectly infringes one or more claims of the ’207 Patent by making, using, selling, offering to sell, and/or importing into the United States the Accused Products in violation of 35 U.S.C. § 271.

74. Wybotics contends that it does not infringe any valid and enforceable claim of the ’207 Patent under any theory, thus Wybotics has not committed any act in violation of 35 U.S.C. § 271.

75. An actual justiciable controversy therefore exists between Wybotics and Zodiac regarding whether Wybotics has infringed any valid and enforceable claim of the ’207 Patent.

76. A judicial declaration is necessary and appropriate so that Wybotics may ascertain its rights regarding its Accused Products and the ’207 Patent.

77. Pursuant to 28 U.S.C. §§ 2201, *et seq*., Wybotics is entitled to a declaratory judgment that Wybotics has not and does not infringe, either directly or indirectly, any valid and enforceable claim of the ’207 Patent under 35 U.S.C. § 271(a), (b), or (c).

COUNT SIX: DECLARATORY JUDGMENT OF NON-INFRINGEMENT OF THE '766 PATENT

78. Wybotics repeats and realleges each and every allegation contained in the preceding paragraphs as though fully set forth herein.

79. Zodiac CA contends that it owns by assignment all right, title, and interest in, and has standing to sue for infringement of the '766 Patent.

80. Zodiac contends that the claims of the '766 Patent are valid and enforceable, and that Wybotics directly and/or indirectly infringes one or more claims of the '766 Patent by making, using, selling, offering to sell, and/or importing into the United States the Accused Products in violation of 35 U.S.C. § 271.

81. Wybotics contends that it does not infringe any valid and enforceable claim of the '766 Patent under any theory, thus Wybotics has not committed any act in violation of 35 U.S.C. § 271.

82. An actual justiciable controversy therefore exists between Wybotics and Zodiac regarding whether Wybotics has infringed any valid and enforceable claim of the '766 Patent.

83. A judicial declaration is necessary and appropriate so that Wybotics may ascertain its rights regarding its Accused Products and the '766 Patent.

84. Pursuant to 28 U.S.C. §§ 2201, *et seq*., Wybotics is entitled to a declaratory judgment that Wybotics has not and does not infringe, either directly or indirectly, any valid and enforceable claim of the '766 Patent under 35 U.S.C. § 271(a), (b), or (c).

COUNT SEVEN: DECLARATORY JUDGMENT OF NON-INFRINGEMENT OF THE '191 PATENT

85. Wybotics repeats and realleges each and every allegation contained in the preceding paragraphs as though fully set forth herein.

86. Zodiac CA contends that it owns by assignment all right, title, and interest in, and has standing to sue for infringement of the ’191 Patent.

87. Zodiac contends that the claims of the ’191 Patent are valid and enforceable, and that Wybotics directly and/or indirectly infringes one or more claims of the ’191 Patent by making, using, selling, offering to sell, and/or importing into the United States the Accused Products in violation of 35 U.S.C. § 271.

88. Wybotics contends that it does not infringe any valid and enforceable claim of the ’191 Patent under any theory, thus Wybotics has not committed any act in violation of 35 U.S.C. § 271.

89. An actual justiciable controversy therefore exists between Wybotics and Zodiac regarding whether Wybotics has infringed any valid and enforceable claim of the ’191 Patent.

90. A judicial declaration is necessary and appropriate so that Wybotics may ascertain its rights regarding its Accused Products and the ’191 Patent.

91. Pursuant to 28 U.S.C. §§ 2201, *et seq*., Wybotics is entitled to a declaratory judgment that Wybotics has not and does not infringe, either directly or indirectly, any valid and enforceable claim of the ’191 Patent under 35 U.S.C. § 271(a), (b), or (c).

PRAYER FOR RELIEF

WHEREFORE, Wybotics respectfully requests that this Court enter judgment against Zodiac as follows:

A. Declaring that Wybotics has not infringed and is not infringing, either directly or indirectly, any valid and enforceable claim of the ’029 Patent in violation of 35 U.S.C. § 271;

B. Declaring that all claims of the ’029 Patent are invalid;

C. Declaring that Wybotics has not infringed and is not infringing, either directly or indirectly, any valid and enforceable claim of the ’031 Patent in violation of 35 U.S.C. § 271;

D. Declaring that all claims of the ’031 Patent are invalid;

E. Declaring that Wybotics has not infringed and is not infringing, either directly or indirectly, any valid and enforceable claim of the ’207 Patent in violation of 35 U.S.C. § 271;

F. Declaring that Wybotics has not infringed and is not infringing, either directly or indirectly, any valid and enforceable claim of the ’766 Patent in violation of 35 U.S.C. § 271;

G. Declaring that Wybotics has not infringed and is not infringing, either directly or indirectly, any valid and enforceable claim of the ’191 Patent in violation of 35 U.S.C. § 271;

H. Declaring Wybotics as the prevailing party and that this case is exceptional under 35 U.S.C. § 285 and awarding Wybotics its reasonable attorney’s fees;

I. Awarding Wybotics its fees, expenses, costs to the fullest extent permitted by law; and

J. Awarding Wybotics such other relief as the nature of the case may admit or require, and any such other relief as this Court deems just and proper.

Dated: September 24, 2025

Respectfully submitted,

JONES DAY

By: */s/ Alexis A. Smith*
Alexis A. Smith

Alexis A. Smith, Bar No. 274429
asmith@jonesday.com
JONES DAY
555 South Flower Street
Fiftieth Floor
Los Angeles, California 90071.2452
Telephone: (213) 489-3939
Facsimile: (213) 243-2539

Ryan B. McCrum (admitted *pro hac vice*)
rbmccrum@jonesday.com
Susan M. Gerber (admitted *pro hac vice*)
smgerber@jonesday.com
JONES DAY
901 Lakeside Avenue
Cleveland, Ohio 44114.7231
Telephone: (202) 879-3939
Facsimile: (202) 626-1700

Attorneys for Plaintiffs
WYBOTICS INC. and WYBOTICS, CO. LTD.

DEMAND FOR JURY TRIAL

Pursuant to Rule 38(b) of the Federal Rules of Civil Procedure, Plaintiffs Wybotics Inc. and Wybotics, Co. Ltd. hereby demand a trial by jury on all issues so triable.

Dated: September 24, 2025

Respectfully submitted,

JONES DAY

By: */s/ Alexis A. Smith*
Alexis A. Smith

Alexis A. Smith, Bar No. 274429
asmith@jonesday.com
JONES DAY
555 South Flower Street
Fiftieth Floor
Los Angeles, California 90071.2452
Telephone: (213) 489-3939
Facsimile: (213) 243-2539

Ryan B. McCrum (admitted *pro hac vice*)
rbmccrum@jonesday.com
Susan M. Gerber (admitted *pro hac vice*)
smgerber@jonesday.com
JONES DAY
901 Lakeside Avenue
Cleveland, Ohio 44114.7231
Telephone: (202) 879-3939
Facsimile: (202) 626-1700

Attorneys for Plaintiffs
WYBOTICS INC. and WYBOTICS, CO. LTD.

Patent Owner Zodiac Pool Systems LLC
Exhibit 2004 - Page 18 of 31

EXHIBIT 3

Patent Owner Zodiac Pool Systems LLC
Exhibit 2004 - Page 19 of 31

US011880207B2

(12) **United States Patent**
Durvasula et al.

(10) **Patent No.: US 11,880,207 B2**
(45) **Date of Patent: *Jan. 23, 2024**

(54) **POOL CLEANING SYSTEM AND METHOD TO AUTOMATICALLY CLEAN SURFACES OF A POOL USING IMAGES FROM A CAMERA**

(71) Applicant: **ZODIAC POOL SYSTEMS LLC**, Carlsbad, CA (US)

(72) Inventors: **Kameshwar Durvasula**, Garfield, NJ (US); **William Londono Correa**, Bloomfield, NJ (US)

(73) Assignee: **ZODIAC POOL SYSTEMS LLC**, Carlsbad, CA (US)

(*) Notice: Subject to any disclaimer, the term of this patent is extended or adjusted under 35 U.S.C. 154(b) by 0 days.

This patent is subject to a terminal disclaimer.

(21) Appl. No.: **17/572,388**

(22) Filed: **Jan. 10, 2022**

(65) **Prior Publication Data**

US 2022/0129005 A1 Apr. 28, 2022

Related U.S. Application Data

(63) Continuation of application No. 17/143,624, filed on Jan. 7, 2021, now Pat. No. 11,262,766, which is a (Continued)

(51) **Int. Cl.**
G05D 1/02 (2020.01)
H04N 7/18 (2006.01)
(Continued)

(52) **U.S. Cl.**
CPC ***G05D 1/0246*** (2013.01); ***E04H 4/1654*** (2013.01); ***G05D 1/0016*** (2013.01);
(Continued)

(58) **Field of Classification Search**
CPC .. G05D 1/0246; G05D 1/0016; G05D 1/0033; G05D 1/0038; G05D 2201/0203;
(Continued)

(56) **References Cited**

U.S. PATENT DOCUMENTS

5,205,174 A 4/1993 Silverman et al.
5,435,031 A 7/1995 Minami et al.
(Continued)

FOREIGN PATENT DOCUMENTS

CN 101139007 3/2008
EP 0687964 12/1995
(Continued)

OTHER PUBLICATIONS

U.S. Appl. No. 13/545,918, Corrected Notice of Allowability dated Jun. 8, 2016, 2 pages.
(Continued)

Primary Examiner — Allen C Wong
(74) *Attorney, Agent, or Firm* — Kilpatrick Townsend & Stockton LLP

(57) **ABSTRACT**

A pool cleaning system for cleaning debris from a submerged surface of a swimming pool includes a self-propelled pool cleaner having rotatably-mounted supports for supporting and guiding the cleaner on the pool surface; an electric motor for enabling the rotation of the rotatably-mounted supports on the pool surface; at least one camera to capture imagery of the pool surface; a controller, in electronic communication with the at least one camera, to determine a cleanliness characteristic of the pool surface on which the cleaner has passed based on the camera imagery and generate a control signal to direct movement of the cleaner based on the cleanliness characteristic of the pool surface, and a portable electronic device configured to present a graphic on a display, the graphic depicting the
(Continued)

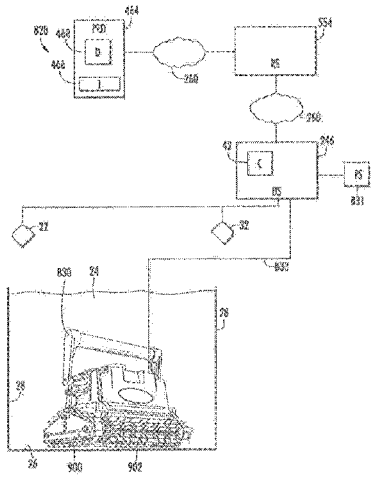

Patent Owner Zodiac Pool Systems LLC
Exhibit 2004 - Page 20 of 31

submerged surface of the pool and those portions of the surface that remain uncleaned as the cleaner traverses the pool surface.

20 Claims, 4 Drawing Sheets

Related U.S. Application Data

continuation of application No. 16/919,750, filed on Jul. 2, 2020, now Pat. No. 11,003,191, which is a continuation of application No. 16/416,840, filed on May 20, 2019, now Pat. No. 10,739,785, which is a continuation of application No. 15/973,983, filed on May 8, 2018, now Pat. No. 10,338,599, which is a continuation of application No. 15/207,065, filed on Jul. 11, 2016, now Pat. No. 9,995,051, which is a continuation of application No. 13/545,918, filed on Jul. 10, 2012, now Pat. No. 9,388,595.

(51) **Int. Cl.**

H04N 23/66	(2023.01)
E04H 4/16	(2006.01)
G05D 1/00	(2006.01)
H04N 23/50	(2023.01)
G06T 7/90	(2017.01)
G06T 7/00	(2017.01)

(52) **U.S. Cl.**
CPC ***G05D 1/0033*** (2013.01); ***G05D 1/0038*** (2013.01); ***H04N 7/18*** (2013.01); ***H04N 23/66*** (2023.01); *G05D 2201/0203* (2013.01); *G06T 7/001* (2013.01); *G06T 7/90* (2017.01); *G06T 2207/10024* (2013.01); *H04N 23/555* (2023.01)

(58) **Field of Classification Search**
CPC H04N 23/66; H04N 23/555; H04N 7/18; E04H 4/1654; G06T 7/90; G06T 7/001; G06T 2207/10024
USPC 348/114
See application file for complete search history.

(56) **References Cited**

U.S. PATENT DOCUMENTS

5,507,058	A	4/1996	Minami et al.	
5,613,261	A	3/1997	Kawakami et al.	
5,886,630	A	3/1999	Menoud	
7,123,746	B2	10/2006	Meniere et al.	
7,362,351	B2 *	4/2008	Meniere	G06T 7/20 348/135
7,398,138	B2	7/2008	Emery et al.	
7,993,600	B2	8/2011	Doyle et al.	
8,007,653	B2	8/2011	Porat	
8,043,070	B2	10/2011	Stiles, Jr. et al.	
9,388,595	B2	7/2016	Durvasula et al.	
9,995,051	B2	6/2018	Durvasula et al.	
10,338,599	B2	7/2019	Durvasula et al.	
10,739,785	B2	8/2020	Durvasula et al.	
11,003,191	B2	5/2021	Durvasula et al.	
11,262,766	B2	3/2022	Durvasula et al.	
2002/0097322	A1	7/2002	Monroe et al.	
2004/0025268	A1	2/2004	Porat et al.	
2004/0040581	A1	3/2004	Bruwer	
2007/0094817	A1	5/2007	Stoltz et al.	
2010/0299016	A1	11/2010	Benzler et al.	
2011/0049023	A1 *	3/2011	Hui	E04H 4/1654 210/138
2011/0091329	A1	4/2011	Stiles, Jr. et al.	
2011/0139727	A1	6/2011	Hui	
2011/0290707	A1 *	12/2011	Porat	G06Q 20/3255 204/229.4
2011/0301752	A1	12/2011	Finezilber	
2013/0151061	A1	6/2013	Hong et al.	
2013/0152970	A1	6/2013	Porat	
2013/0269097	A1	10/2013	Alammari	
2014/0009748	A1	1/2014	Leonessa et al.	

FOREIGN PATENT DOCUMENTS

EP	0811432	12/1997
JP	6162905	3/1986
WO	2004019295	3/2004
WO	2009031361	3/2009
WO	2012023676	2/2012

OTHER PUBLICATIONS

U.S. Appl. No. 13/545,918, Non-Final Office Action dated Jun. 26, 2015, 17 pages.
U.S. Appl. No. 13/545,918, Notice of Allowability dated Mar. 9, 2016, 8 pages.
U.S. Appl. No. 13/545,918, Notice of Allowance dated Dec. 31, 2015, 8 pages.
U.S. Appl. No. 15/207,065, Non-Final Office Action dated Nov. 6, 2017, 10 pages.
U.S. Appl. No. 15/207,065, Notice of Allowance dated Feb. 23, 2018, 9 pages.
U.S. Appl. No. 15/973,983, Non-Final Office Action dated Nov. 6, 2018, 7 pages.
U.S. Appl. No. 15/973,983, Notice of Allowance dated Mar. 4, 2019, 9 pages.
U.S. Appl. No. 16/416,840, Non-Final Office Action dated Feb. 28, 2020, 7 pages.
U.S. Appl. No. 16/416,840, Non-Final Office Action dated Jan. 15, 2020, 9 pages.
U.S. Appl. No. 16/416,840, Notice of Allowability dated Jun. 30, 2020, 2 pages.
U.S. Appl. No. 16/416,840, Notice of Allowance dated Apr. 29, 2020, 9 pages.
U.S. Appl. No. 16/919,750, Non-Final Office Action dated Oct. 6, 2020, 10 pages.
U.S. Appl. No. 16/919,750, Notice of Allowance dated Mar. 11, 2021, 10 pages.
U.S. Appl. No. 17/143,624, Non-Final Office Action dated Jul. 20, 2021, 18 pages.
U.S. Appl. No. 17/143,624, Notice of Allowance dated Dec. 24, 2021, 12 pages.
Spain Application No. ES2527883, Response to Substantive Examination dated May 5, 2016.
Spain Application No. ESP201331047, Search Report dated Feb. 3, 2015, 1 page.

* cited by examiner

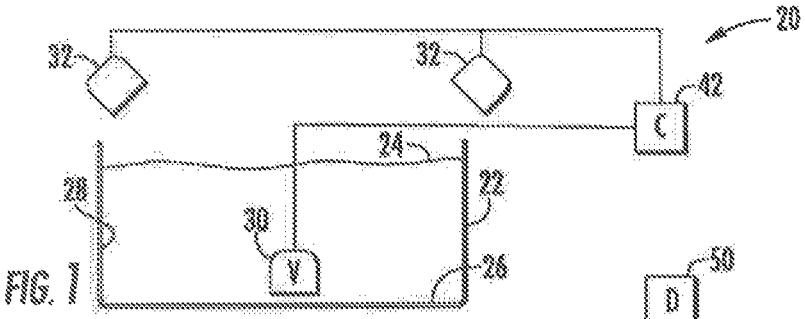

FIG. 1

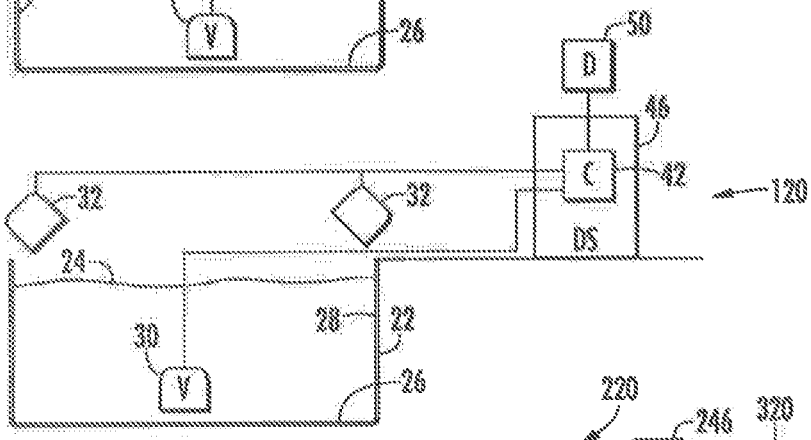

FIG. 2

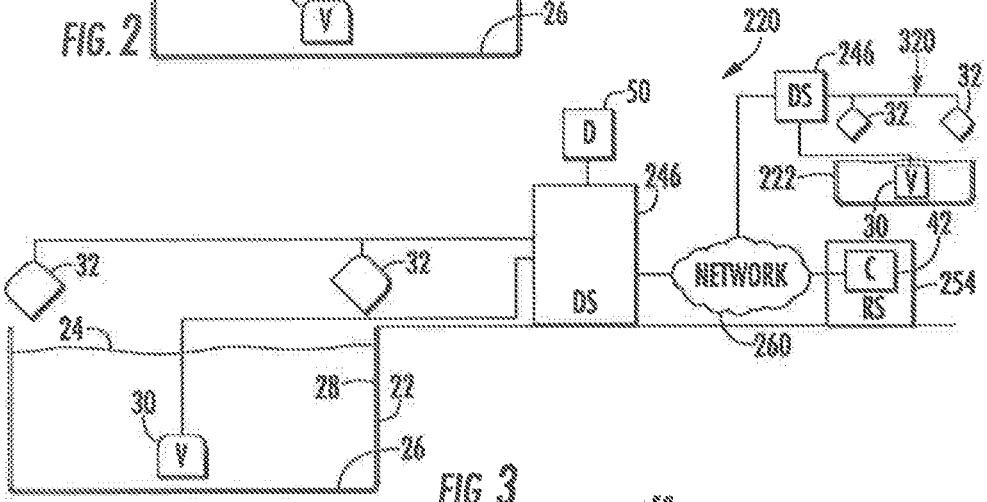

FIG. 3

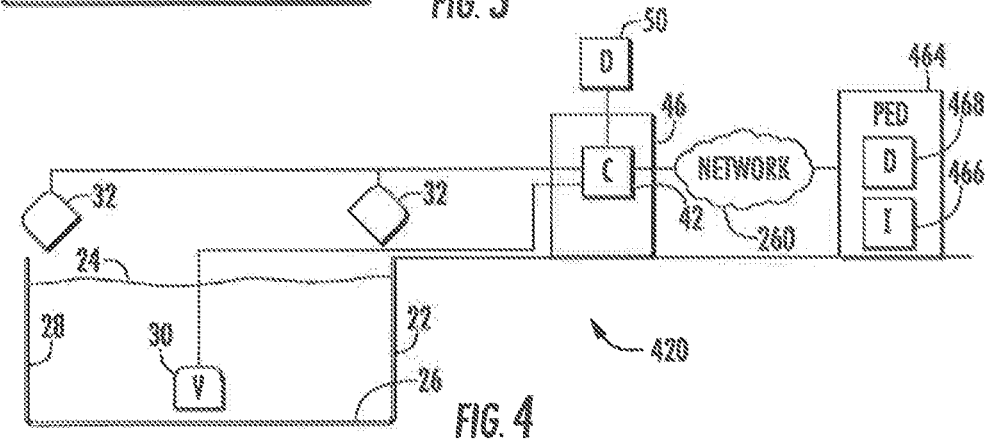

FIG. 4

Patent Owner Zodiac Pool Systems LLC
Exhibit 2004 - Page 22 of 31

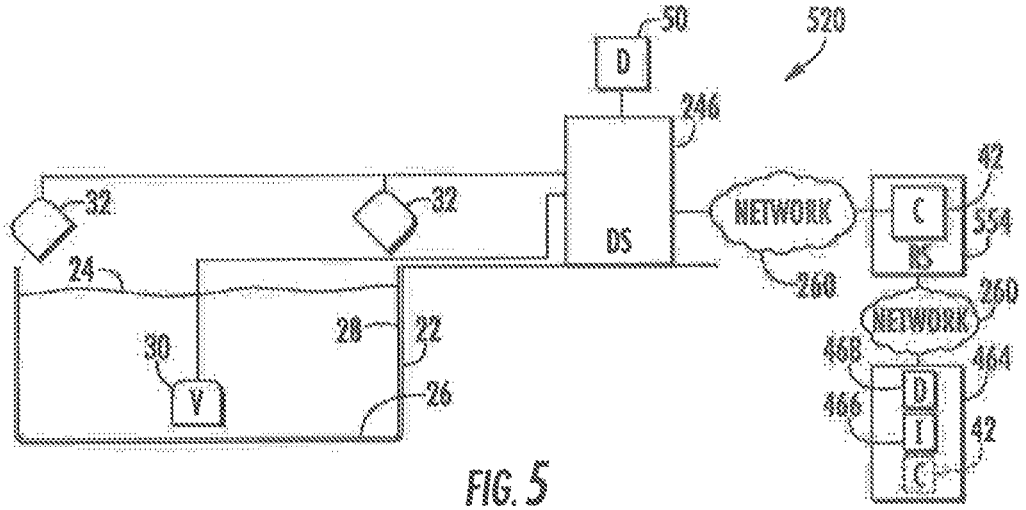

FIG. 5

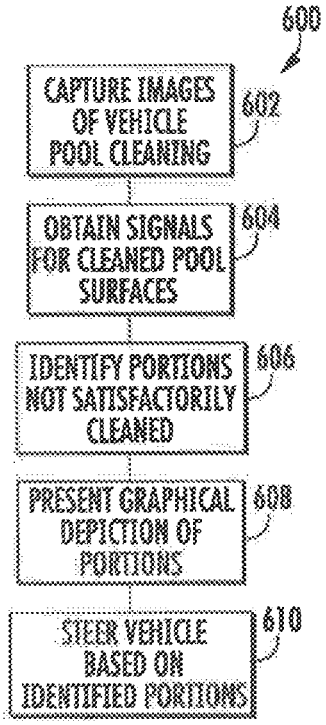

FIG. 6

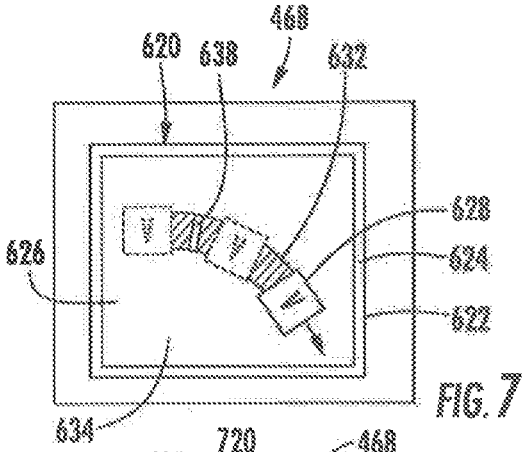

FIG. 7

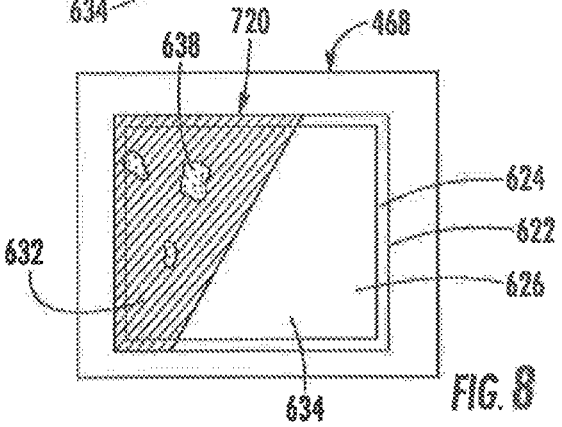

FIG. 8

Patent Owner Zodiac Pool Systems LLC
Exhibit 2004 - Page 23 of 31

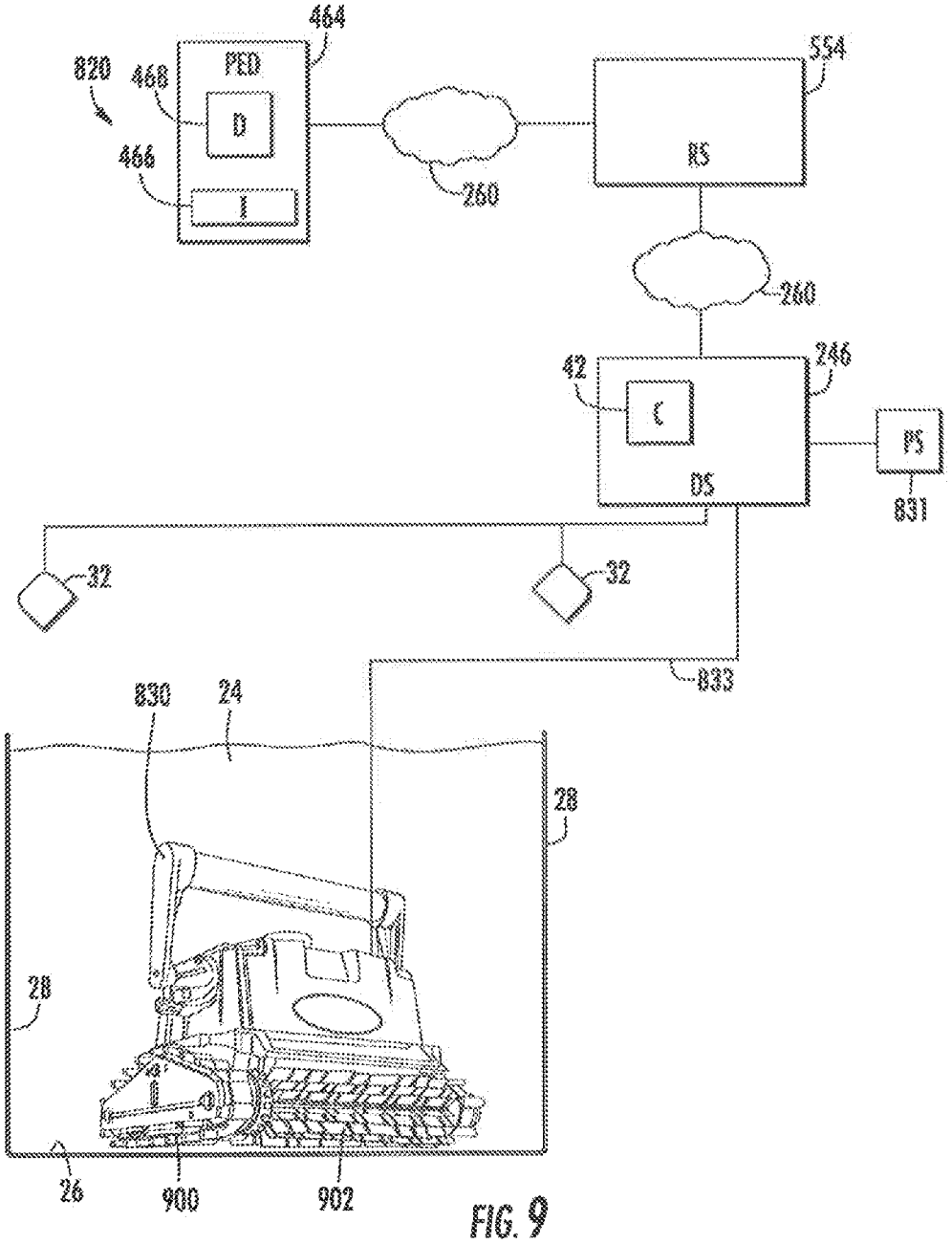

FIG. 9

Patent Owner Zodiac Pool Systems LLC
Exhibit 2004 - Page 24 of 31

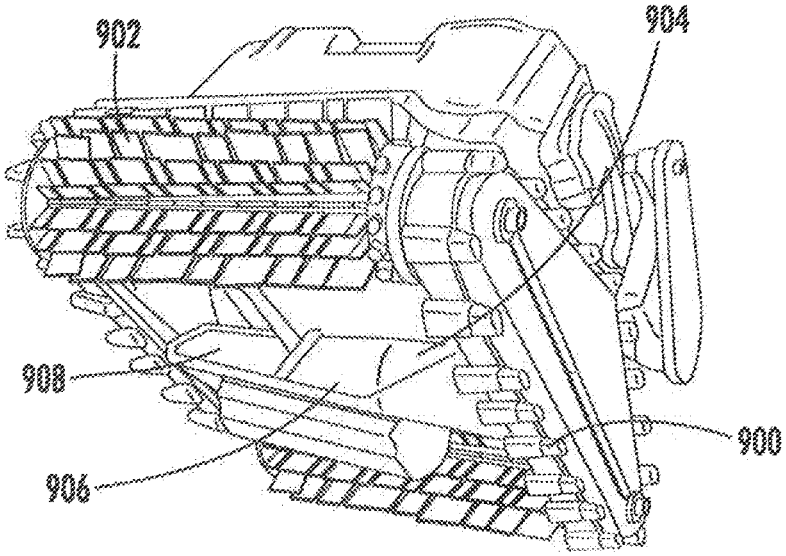

FIG. 10

Patent Owner Zodiac Pool Systems LLC
Exhibit 2004 - Page 25 of 31

POOL CLEANING SYSTEM AND METHOD TO AUTOMATICALLY CLEAN SURFACES OF A POOL USING IMAGES FROM A CAMERA

CROSS-REFERENCE TO RELATED APPLICATION

This application is a continuation of allowed U.S. patent application Ser. No. 17/143,624, filed Jan. 7, 2021, which is a continuation of U.S. patent application Ser. No. 16/919,750, filed Jul. 2, 2020 (now U.S. Pat. No. 11,003,191), which is a continuation of U.S. patent application Ser. No. 16/416,840, filed May 20, 2019 (now U.S. Pat. No. 10,739,785), which is a continuation of U.S. patent application Ser. No. 15/973,983, filed May 8, 2018 (now U.S. Pat. No. 10,338,599), which is a continuation of U.S. patent application Ser. No. 15/207,065, filed Jul. 11, 2016 (now U.S. Pat. No. 9,995,051), which is a continuation of U.S. patent application Ser. No. 13/545,918, filed Jul. 10, 2012 (now U.S. Pat. No. 9,388,595), the contents of all of which are incorporated herein by reference in their entireties.

BACKGROUND

Manually cleaning the floor and sides of a swimming pool may be a tedious and time-consuming task. As a result, automated robotic pool cleaners have been developed. However, controlling and monitoring such automated robotic pool cleaners to insure that all portions of the pool surfaces are satisfactorily cleaned remains a challenge.

SUMMARY OF THE INVENTION

The disadvantages heretofore associated with the prior art are overcome by the present invention of a pool cleaning system for cleaning debris from a submerged surface of a swimming pool comprising: a self-propelled pool cleaner having rotatably-mounted supports for supporting and guiding the cleaner on the pool surface; a filter configured to retain the debris collected from the submerged surface of the swimming pool; an electric motor for enabling the rotation of the rotatably-mounted supports on the pool surface; at least one camera to capture imagery of the pool surface; a controller, in electronic communication with the at least one camera, to determine a cleanliness characteristic of the pool surface on which the cleaner has passed based on the camera imagery and generate a control signal to direct movement of the cleaner based on the cleanliness characteristic of the pool surface; and a portable electronic device is configured to present a graphic on a display, the graphic depicting the submerged surface of the pool and those portions of the surface that remain uncleaned as the cleaner traverses the pool surface.

In one aspect, the at least one camera is carried by the cleaner. In another aspect, the controller is carried by the cleaner. In still another aspect, the electric motor is mechanically connected to at least one of the rotatably-mounted supports.

In yet another aspect, the controller is operable to execute one or more cleaning programs for cleaning the submerged surfaces of the pool. In one aspect, the control signal causes the cleaner to drive in a direction to clean a portion of the pool surface based on the cleanliness characteristic of the pool surface. Alternatively, the control signal causes the cleaner to steer in a direction to clean a portion of the pool surface based on the cleanliness characteristic of the pool surface. In another aspect, the control signal causes the cleaner to drive in a direction to re-clean a portion of the pool surface over which the cleaner has passed. Alternatively, the control signal causes the cleaner to steer in a direction to re-clean a portion of the pool surface over which the cleaner has passed.

In one aspect, the captured imagery from the at least one camera is digitally processed by the controller to determine the cleanliness characteristic of the pool surface. Alternatively, the captured imagery from the at least one camera is digitally processed by a remote processor to determine the cleanliness characteristic of the pool surface.

In another aspect, the system further comprises a dry station located remotely from the cleaner and in communication with the cleaner, wherein the dry station includes the controller. Alternatively, the system further comprises a dry station located remotely from the cleaner and in communication with the cleaner, wherein the controller is located remotely from the cleaner and the dry station. In still another aspect, the controller controls electric power provided to the electric motor.

In one aspect, the control signal causes the cleaner to move in a direction of a portion of the pool surface to be cleaned based solely upon signals received from the camera. In another aspect, the control signal causes the cleaner to drive in a direction to clean a portion of the pool surface based on the cleanliness characteristic of the pool surface. Alternatively, the control signal causes the cleaner to steer in a direction to clean a portion of the pool surface based on the cleanliness characteristic of the pool surface. In yet another aspect, the control signal causes the cleaner to drive in a direction to re-clean a portion of the pool surface over which the cleaner has passed. Alternatively, the control signal causes the cleaner to steer in a direction to re-clean a portion of the pool surface over which the cleaner has passed.

BRIEF DESCRIPTION OF THE DRAWINGS

FIG. **1** is a schematic illustration of an ex ample pool cleaning system.

FIG. **2** is a schematic illustration of an implementation of the pool cleaning system of FIG. **1**.

FIG. **3** is a schematic illustration of an implementation of the pool cleaning system of FIG. **1**.

FIG. **4** is a schematic illustration of an implementation of the pool cleaning system of FIG. **1**.

FIG. **5** is a schematic illustration of an implementation of the pool cleaning system of FIG. **1**.

FIG. **6** is a flow diagram of an example method that may be carried out with the pool cleaning system of FIG. **2-5**.

FIG. **7** is a plan view of an example display with an example graphical depiction.

FIG. **8** is a plan view of another example display with an example graphical depiction.

FIG. **9** is a schematic illustration of an implementation of the pool cleaning system of FIG. **1** with an example pool cleaning vehicle.

FIG. **10** is a bottom perspective view of the example pool cleaning vehicle of the system of FIG. **9**.

DETAILED DESCRIPTION OF THE EXAMPLE EMBODIMENTS

FIG. **1** schematically illustrates an example pool cleaning system **20**. As schematically shown by FIG. **1**, pool cleaning system **20** is adapted to clean submerged surfaces of a pool **22** containing a liquid **24**. In particular, pool cleaning system

Patent Owner Zodiac Pool Systems LLC
Exhibit 2004 - Page 26 of 31

20 is adapted to clean at least a bottom or floor surface 26 of the pool 22 and possibly to additionally clean surfaces 28 of pool 22. As will be described hereafter, pool cleaning system facilitates the control and monitoring of a robotic pool cleaner to better assure that all portions of pool 22 are satisfactorily cleaned.

Pool cleaning system 20 comprises vehicle 30, cameras 32 and controller 42. Vehicle 30 comprises an automated powered device configured to travel adjacent to submerged or water containing surfaces of pool 20 (such as floor 26 and/or side surfaces 28) while cleaning such surfaces. In one implementation, vehicle 30 may include vacuum or suction devices, a liquid circulation system and a filter to draw debris, such as bacterial growth or plant growth, from such pool surfaces, wherein the drawn liquid containing such residue or foreign matter is filtered to collect the debris. In other implementations, vehicle 30 may not collect such debris, wherein vehicle 30 merely loosens such debris on the pool surfaces such that the loosened or separated debris may be subsequently removed using the existing liquid filtering system of pool 22.

To assist in the loosening of debris, in one implementation, vehicle 30 may additionally include a chemical dispenser to closely apply pool cleaning chemicals to the pool surfaces as the vehicle 30 traverses such surfaces. In one implementation, vehicle 30 may additionally or alternatively include one or more scrubbing members, such as active (driven) or passive (undriven or idling) brushes, to assist in the removal of residue or foreign matter from such pool surfaces. In yet another implementation, vehicle 30 may additionally or alternatively include liquid jets to assist in the loosening of debris.

To move along the submerged surfaces of pool 22, vehicle 30 includes one or more propulsion mechanisms. In one implementation, vehicle 30 is propelled along the submerged pool surfaces using wheels, rollers, tracks or other surface contacting members powered by a motor and the like. Such wheels, rollers or tracks may themselves include the scrubbing members used to clean the surfaces. In one implementation vehicle 30 may also alternatively be propelled by means of the vacuum or liquid jet. The vacuum or liquid jets used for such propulsion nozzle facilitate loosening of debris for collection by vehicle 30. In other implementations, vehicle 30 may include other propulsion mechanisms.

Cameras 32 comprise devices configured to capture video or time lapse images of pool 22. In the example illustrated, cameras 32 are mounted on structures external to pool 22. In other words, cameras 32 are not submerged. In other implementations, cameras 32 may alternatively be mounted to vehicle 30. In the example illustrated, cameras 32 capture movement of vehicle 30 while vehicle 30 is submerged within pool 22. In other implementations, cameras 32 merely capture images of submerged surfaces 26, 28 of pool 22.

In the example illustrated, cameras 32 comprise cameras serving as part of a home or pool security system, wherein such cameras detect the presence of a person at pool 22 satisfying a predefined characteristic and wherein an alert is output upon the person's detected presence. For example, in one implementation, cameras 32 are utilized as part of a security system that detects when a person below a predefined age, such as a child, is present at pool 22 without a detected presence of a recognized adult. In another implementation, cameras 32 may detect the presence of an unauthorized person or intruder at pool 22. Identification of the person may be achieved by an off-site human or computerized monitoring system, wherein signals from cameras 32 are transmitted across a wide area network or may be achieved with software of controller 42 which includes facial recognition or other identification programming.

Because pool cleaning system 20 utilizes pre-existing cameras 32 provided as part of a security system or shares the use of cameras 32 with such a home or pool security system, pool cleaning system 20 is easier to set up, less complex and less expensive. In other implementations, pool cleaning system 20 may utilize dedicated cameras 22 independent of any cameras associated with a home, facility or pool security system. In such an alternative system, cameras 32 may be more precisely focused upon pool 22 and surfaces 26, 28 while also including appropriate lenses or modifications to account for glare, refraction and the like to better facilitate the capture of surfaces and vehicle 30 which are submerged.

Controller 42 comprises one or more processing units in communication with vehicle 30 and cameras 32. For purposes of this application, the term "processing unit" shall mean a presently developed or future developed processing unit that executes sequences of instructions contained in a memory. Execution of the sequences of instructions causes the processing unit to perform steps such as generating control signals. The instructions may be loaded in a random access memory (RAM) for execution by the processing unit from a read only memory (ROM), a mass storage device, or some other persistent storage. In other embodiments, hard wired circuitry may be used in place of or in combination with software instructions to implement the functions described. For example, controller 42 may be embodied as part of one or more application-specific integrated circuits (ASICs). Unless otherwise specifically noted, the controller is not limited to any specific combination of hardware circuitry and software, nor to any particular source for the instructions executed by the processing unit.

In one implementation, controller 42 communicates with vehicle 30 and cameras 32 entirely across a wired connection. In another implementation, controller 42 communicates with vehicle 30 and cameras 32 across a wireless connection, such as cross a local area network (LAN or a wide area network (WAN) such as the Internet. One of limitation, controller 42 may communicate with vehicle 30 and cameras 32 using a combination of both wired and wireless communication connections.

Controller 42 is configured to generate control signals for steering vehicle 30 based upon signals received from cameras 32. In one implementation, controller 42 provides the sole steering directions for vehicle 30 using signals from cameras 32. Because vehicle 30 is precisely steered under the control of controller 42, rather than traveling in a random manner, entire summer surfaces of pool 22 may be more quickly and efficiently covered and cleaned. Because controller 42 provides the only steering instructions for vehicle 30 and utilizes signals from cameras 32, complex steering algorithms or codes in either vehicle 30 or controller 42 may be omitted to reduce complexity and cost of system 20.

In another implementation, vehicle 30 may cover or travel across surfaces of pool 22 in either a random fashion or according to an automated pool coverage algorithm or pool coverage pattern stored in a memory associated with vehicle 30 or controller 42. In such an implementation, controller 42 utilizes signals from cameras 32 to verify that all of the surfaces of 22 have been cleaned, that no spots have been missed. Upon identifying a missed spot, controller 42 utilizes signals from camera 32 to steer vehicle 32 over such missed portions of surfaces 26, 28. According to one

example, controller **42** not only uses signals from camera **32** to determine whether any portions of surfaces **26**, **28** have been missed entirely, but to also determine whether any portions of surfaces **26**,**28** have been cleaned, but not to a satisfactory degree or extent. In such circumstances, controller **42** uses signals from cameras **32** to steer vehicle **34** such areas to re-clean such portions until such portions have been satisfactorily cleaned such that the portions have a cleanliness characteristic satisfying a predefined threshold.

FIG. **2** schematically illustrates pool cleaning system **120**, the particular example of pool cleaning system **20** described above. Pool cleaning system **120** is similar to pool cleaning system **20** except that pool cleaning system **120** additionally comprises dry station **46** and display **50**. Those remaining components of pool cleaning system **120** which correspond to components of pool cleaning system **20** are numbered similarly.

Dry station **46** comprises a station in communication with vehicle **30** and cameras **32** outside of pool **22**. Dry station **46** incorporates controller **42**. In one implementation, dry station **46** communicates with vehicle **30** in a wired fashion. In such an implementation, dry station **46** further provides electrical power to vehicle **30** in a wired fashion. Dry station **46** communicates with cameras **32** and either a wired or wireless fashion.

Display **50** comprises a device to present a graphical images and text on a display screen. In one implementation, display **58** may be incorporated as part of dry station **46**. In another implementation, display **50** may be provided on a portable electronic device, a computer, a television and the like. Display **50** is utilized by pool cleaning system **120** to present information regarding the cleaning of pool **22** to facilitate control of vehicle **30** by controller **42**. In one implementation, display **50** is utilized by pool cleaning system **120** and a controller **42** to present a graphical depiction of those portions of surfaces **26**, **28** of pool **22** have not been satisfactorily cleaned so as to satisfy a predefined cleanliness characteristic threshold. Such portions may comprise portions that have been completely missed by vehicle **30** as well as those portions that have been covered by vehicle **30** but have not been satisfactorily cleaned with the given number of passes of vehicle **30** or the existing cleaning settings of vehicle **30**. The graphical depiction presented on display **50** enables a person view the quality of the prior cleaning session and to input commands causing controller **42** to generate control signals using signals from camera **32** to steer vehicle **30** back to such identified portions where such portions may be cleaned at the same or elevated cleaning aggressiveness settings.

Another implementation, display **50** may be further utilized by controller **42** to depict the progress of vehicle **30** in cleaning pool **22**. Such a display **50** allows a person to visually determine how much of the pool has been currently cleaned and to estimate the remaining time before the pool cleaning task is completed. In certain circumstances, using display **50**, a person may adjust a setting of vehicle **30** to accelerate a rate at which surfaces **26**, **20** of pool **22** are cleaned to meet an earlier desired completion time for such pool cleaning.

FIG. **3** schematically illustrates pool cleaning system **220**, another example implementation of pool cleaning system **20**. Pool cleaning system **220** is similar to pool cleaning system **20** except that pool cleaning system **220** additionally comprises dry station **246**, display **50**, and remote server **254**. Those remaining components of pool cleaning system **220** which correspond to components of pool cleaning system **20** or pool cleaning system **120** are numbered similarly.

Dry station **246** is similar to dry station **46**, described above, except that dry station **246** serves as a local interface for communication with controller **42** across a network **260**. In one implementation, network **260** may comprise a local area network. In another implementation, network **260** may comprise a wide area network, such as the Internet. For example, in one implementation, dry station **246** may incorporate a modem. In one implementation, dry station **246** may communicate across a local area network to controller **42**. In another implementation, dry station **246** may communicate through a router, across a local area network, to a local modem which communicates across a network **260**. The example illustrated, dry station **246** further provides part of vehicle **30** across a wired cable or wired connection. Display **50** is described above with respect to system **120**.

Remote server **254** comprises a server remote from dry station **246** which is in communication with dry station **246** across network **260**. Remote server **254** includes controller **42**. During operation, signals from cameras **32** are transmitted across dry station **246** across network **260** to controller **42** of remote server **254**. Based upon such signals from cameras **32**, controller **42** generates control signals which are transmitted back across network **260** and through dry station **246** to vehicle **30** to steer vehicle **30**.

As shown by FIG. **3**, remote server **254** and network **260** may be shared as part of other pool cleaning systems **320**, wherein controller **42** generates control signals for steering the pool cleaning vehicle **30** of system **320** based upon signals from cameras **32** transmitted across dry station **246** of system **320**. In such an implementation, the cost and complexity of pool cleaning system **220** is reduced since controller **42** is remotely provided at remote server **254** which services multiple pool cleaning systems **220**,**320**. Upgrades to controller **42** and its software are also more easily achieved for all pool cleaning systems to **20**, **320** and their pools **22**, **222** being serviced. In one implementation, the supervised cleaning, inspection and possible re-cleaning facilitated by the use of cameras **32** may be provided as part of a subscription to users of vehicle **30**. In such an implementation, a pool **22** having security cameras **32** may be upgraded with appropriate software or an appropriate software module added to dry station **246** to make a network connection with controller **42** which directs the security cameras **32** to capture vehicle **30** utilizes such signals for steering vehicle **30**.

FIG. **4** schematically illustrates pool cleaning system **420**, another particular implementation of pool cleaning system **20**. Pool cleaning system **420** is similar to pool cleaning system **120** except that pool cleaning system **420** additionally comprises a portable electronic device **464**. Those remaining components of pool cleaning system **420** which correspond to components of pool cleaning system **120** are numbered similarly.

Portable electronic device **464** comprises a portable handheld electronic device in communication with controller **42** and/or dry station **46** across network **260**. Examples of such a portable electronic device (PED) **300** include, but are not limited to, a smart phone, a personal data assistant (PDA), laptop, notebook computer, tablet computer (e.g. IPAD) and MP3 player (e.g., IPOD TOUCH). In the example illustrated, PED **464** comprises input **466** and display **468**.

Input **466** serves as a user interface for PED **464** by which inputs are made to PED **464**. Input **466** facilitates entry of inputs or commands by a person to cause controller **42** to

generate control signals varying the control of vehicle **30**. In one implementation, input **466** comprise a keyboard. In other implementations, input **466** may comprise a touchpad, a stylus, a microphone with associated speech recognition software or programming, a touch screen, buttons, switches and the like. In some implementations, input **466** may comprise a touch screen incorporated as part of display **468**.

Display **468** comprises a user interface by which graphical or textual data is presented to a user. Display **468** may present the same or similar information as presented at dry station **246** by display **50** as described above. In one implementation, display **468** comprises a liquid crystal display. In other implementations, display **468** may comprise other types of display technology such as a light emitting diode display, an organic light emitting diode display (OLEDD), an electronic ink (e-ink) display or other types of display technology in present use or developed in the future. Although system **420** is illustrated as including controller **422** is part of dry station **46**, in some implementations, controller **42** may alternatively be located as part of PED **464**.

PED **464** enables a person located remote from pool **22** to monitor the progress of the cleaning of pool **22** by vehicle **30** of system **420**. PED **464** provides a person with a graphical presentation (described above with respect to display **50**) indicating those portions of surfaces **26**, **28** of pool **22** that have been completed as well as those portions **26**, **20** and that remain to be cleaned. The person may also be provided with a graphical indication of what portions need to be re-cleaned to meet predetermined cleanliness thresholds. In the example illustrated, input **466** enables a person to enter commands or selections which are transmitted across network **260** to controller **42** to adjust operation of vehicle **30**. For example, the path or route of vehicle **30** may be changed, the aggressiveness of the cleaning chemicals or mechanical cleaning devices may be adjusted, the speed at which vehicle **30** traverses surfaces **26**, **28** may be adjusted. In response to such adjustment signals from PED **464**, controller **42** may utilize signals from cameras **32** to adjust the steering of vehicle **30**.

FIG. **5** schematically illustrates pool cleaning system **520**, another example implementation of pool cleaning system **20**. Pool cleaning system **520** is similar to pool cleaning system **420** except that pool cleaning system **520** additionally comprises a remote server **554**. Those remaining components of pool cleaning system **520** which correspond to components of pool cleaning system **420** are numbered similarly.

Remote server **554** is similar to remote server **254** described above with respect to system **220**. Remote server **554** comprises a server remote from dry station **246** which is in communication with dry station **246** across network **260**. Remote server **254** includes controller **42**. During operation, signals from cameras **32** are transmitted across dry station **246** across network **260** to controller **42** of remote server **254**. Based upon such signals from cameras **32**, controller **42** generates control signals which are transmitted back across network **260** and through dry station **246** to vehicle **30** to steer vehicle **30**. Controller **42** further relays either the raw signals from camera **32** or image signals generated based upon signals from cameras **32** to PED **464**, wherein such images (described above) are presented on display **468**. As noted above, PED may further receive commands through input **466**, wherein such commands are transmitted to controller **42** which generates control signals that are ultimately transmitted to vehicle **30** for steering vehicle **30**.

As with remote server **254**, remote server **554** and network **260** may be shared as part of other pool cleaning systems **320** (shown in FIG. **3**), wherein controller **42** generates control signals for steering the pool cleaning vehicle **30** of system **320** based upon signals from cameras **32** transmitted across dry station **246** of system **320**. In such implementations, controller **42** of remote server **554** may interact with other PEDs **464**. In such an implementation, the cost and complexity of pool cleaning system **220** is reduced since controller **42** is remotely provided at remote server **254** which services multiple pool cleaning systems **220**, **320**. Upgrades to controller **42** and its software are also more easily achieved for all pool cleaning systems to **20**, **320** and their pools **22**, **222** being serviced. In one implementation, the supervised cleaning, inspection and possible re-cleaning facilitated by the use of cameras **32** may be provided as part of a subscription to users of vehicle **30**. In such an implementation, a pool **22** having security cameras **32** may be upgraded with appropriate software or an appropriate software module added to dry station **246** to make a network connection with controller **42** which directs the security cameras **32** to capture vehicle **30** utilizes such signals for steering vehicle **30**. As indicated by broken lines, in other implementations, the controller **42** for generating control signals steering vehicle **30** based upon signals from cameras **32** may alternatively be relocated in PED **464**.

FIG. **6** is a flow diagram illustrating an example method **600** that may be carried out by any of systems **120-520**. As indicated by step **602**, cameras **32** capture images of pool cleaning by vehicle **30**. As indicated by step **604**, controller **42** obtain such signals from cameras **32** for the surfaces of pool **22** that have been cleaned. As indicated by step **606**, controller **42** uses information gathered from the signals from cameras **32** to identify those portions of surfaces **26**, **28** not satisfactorily cleaned not satisfying a predefined cleanliness characteristic or measurement threshold. One example of a cleanliness characteristic measurement a threshold may be how well the color of a surface matches a predetermined desirable color for the pool surface (such as original color of the tile or surface). A surface that has been missed entirely by vehicle **30** during a pool cleaning session may be automatically deemed to not satisfy a predetermined cleanliness characteristic.

As indicated by step **608**, based upon such determinations, controller **42** generates control signals resulting in the presentation of a graphical depiction of those portions of pool **22** that has not been satisfactorily cleaned. Such graphical representations or depictions may be presented on display **50** or display **468**. FIGS. **7** and **8** illustrate examples of graphical depictions that may be presented.

FIG. **7** illustrates display **468** presenting graphical depiction **620**. Graphical depiction **620** comprises a first graphic **622** having a first portion **624** representing sides or walls **28** of pool **22** and a second portion **626** representing the floor **26** of pool **22**. Graphical depiction **620** further comprises a moving icon **628** representing the current positioning of vehicle **30**. In one implementation, the path of vehicle **30** may additionally be depicted by icon **628** shown in broken lines. As shown by FIG. **7**, those portions **632** of surfaces **26**, **28** of pool **22** (shown in FIG. **1**) over which of vehicle **30** has moved are identified by graphical depiction **620** either by color, markings or other various distinctive attributes. Likewise, those portions **634** of surfaces **26**, **28** of pool **22** that have not been covered by vehicle **30** are identified by a distinct color col marking or distinctive attribute of depiction **620**. As a result, a person may view the current position of vehicle **30**, the extent to which pool **22** has been cleaned

or covered by vehicle **30** and the extent of pool **22** that remains to be cleaned. In the example illustrated, depiction **620** further identifies those portions **638** of surfaces **26**, **28** that have been cleaned, but which have not been cleaned to a satisfactory degree or extent. In one implementation, portions **638** may be identified by colors, brightness, markings or other visually distinctive attributes that are visually distinct from both portions **632** and portions **634**. In other implementations, portions **638** may have the same characteristic of portions **634**. In yet other implementations, different portions **638** may have different visual attributes depending upon a degree to which such clean portions have failed to satisfy the predefined cleanliness characteristic threshold. In some implementations, different port **638** may have different visual attributes depending upon different cleaning strategies that may be recommended for the different portions **638**. For example, controller **42** may determine and recommend a first cleaning strategy (a first chemical solution jetted at a first rate and scrubbed at a first rate) with respect to a first portion **638** and may recommend a second different cleaning strategy (a second chemical solution jetted at a second rate is about a second rate) with respect to a second portion **638**, wherein the different cleaning strategies are represented by different visual attributes presented in depiction **620**.

FIG. **8** illustrates display **468** presenting a graphical depiction **720**. Graphical depiction **720** comprises a first graphic **622** having a first portion **624** representing sides or walls **28** of pool **22** and a second portion **626** representing the floor **26** of pool **22** (shown in FIG. **1**). Graphical depiction **720** is similar to graphical depiction **620** except that graphical depiction **720** omits icon **628** presenting vehicle **30**. Like depiction **620**, depiction **720** graphically depicts those portions **632** of surfaces **26**, **28** over which vehicle **30** has traveled while in a cleaning mode. Depiction **720** also visually depicts those portions **634** that have not been covered by vehicle **30** in the cleaning mode and those portions **638** over Which vehicle **30** has traveled while in the cleaning mode, but which have not been cleaned to a satisfactory degree. As illustrated in FIG. **8**, different portions **638** may be visibly distinguished from one another through color, text or markings indicating either differences in the cleanliness of such portions **638** or indicating different recommended cleaning strategies or approaches that may be selected by a person using input **466** when vehicle **30** is steered back to such portions **638** for re-cleaning using signals from camera **32**.

As indicated by step **610** of FIG. **6**, controller **42** generates control signals steering vehicle **30** to re-clean portions of pool **22**, such as portions **638**. Such steering may be facilitated by using signals from cameras **32**. As noted above, in some implementations, a person may be allowed Choose a cleaning approach for a particular portion **638** using input **466**. The selection may be facilitated by visual inspection of the different visual attributes for the particular portion **638** provided by depiction **720** (or depiction **620**). In some implementations, input **466** may additionally be utilized by a person to prioritize an order in Which portions **638** are re-cleaned.

FIG. **9** illustrates pool cleaning system **820**, an example implementation of pool cleaning system **20**. Pool cleaning system **820** is similar to pool cleaning system **520** except the pool cleaning system **820** located controller **42** in dry station **246** and includes pool cleaning vehicle **830**, a specific example of vehicle **30**. As shown by FIG. **9**, in addition to transmitting control signals generated by controller **42** to vehicle **830**, dry station **246** further transmits power from power source **831** through a power line or power cable **833** to vehicle **830**. In the example illustrated, data communication and communication of control signals, also occurs across wired connections within or alongside the same line **833**. In the example illustrated, remote server **554** serves as a communication link by which upgrades to controller **42** may be implemented across a wide number of pool cleaning systems and by which information from controller **42** is conveyed to one or more portable electronic devices **464** across network **260**.

Vehicle **830** comprises a robotic or automated pool cleaning device. Vehicle **830** comprises a self-contained onboard filtration system with drive and pump motors. Vehicle **830** utilizes an internal microprocessor guided drive motor to systematically clean surfaces of pool **22**. As shown by FIGS. **9** and **10**, vehicle **830** utilizes a toothed track drive **900** provide traction and propulsion for vehicle **30**. Vehicle **830** comprises rotating brushes **902** to loosen waterline buildup and breakdown large debris while power washing jets **904** flush out dirt from pores, seems in corners where brushes **902** may not be able to reach. The loosened dirt and debris is vacuumed through off-center vacuum ports **906** which passes the vacuumed debris through internally house filter bag. In the example illustrated, vehicle **830** further comprises rollers **908** which inhibit vehicle **830** from becoming impeded or stuck on raised drains or pop-up heads. Although illustrated as being employed with system **820**, vehicle **830** may also be utilized with any of systems **20**, **120**, **220**, **320** and **420**. In other implementations, other robotic or automated pool cleaning vehicles may be utilized.

Although the present disclosure has been described with reference to example embodiments, workers skilled in the art will recognize that changes may be made in form and detail without departing from the spirit and scope of the claimed subject matter. For example, although different example embodiments may have been described as including one or more features providing one or in ore benefits, it is contemplated that the described features may be interchanged with one another or alternatively be combined with one another in the described example embodiments or in other alternative embodiments. Because the technology of the present disclosure is relatively complex, not all changes in the technology are foreseeable. The present disclosure described with reference to the example embodiments and set forth in the following claims is manifestly intended to be as broad as possible. For example, unless specifically otherwise noted, the claims reciting a single particular element also encompass a plurality of such particular elements.

What is claimed is:

1. A self-propelled pool cleaning system for cleaning debris from a submerged surface of a swimming pool, comprising:

a. a vehicle body;

b. means for moving the vehicle body within the swimming pool;

c. a filter configured to retain debris collected from the submerged surface;

d. at least one camera for capturing an image of at least a first object within the swimming pool; and

e. a controller (i) in electronic communication with the at least one camera and (ii) configured to generate, in response to the captured image, at least one control signal to cause movement of the body within the swimming pool to, or away from, the first object.

2. A pool system comprising:

at least one piece of equipment for a swimming pool or spa;

Patent Owner Zodiac Pool Systems LLC
Exhibit 2004 - Page 30 of 31

one or more cameras configured to capture video or images of at least a portion of a location including the swimming pool or spa; and

a controller in communication with the at least one piece of equipment and the one or more cameras, the controller configured to receive visual data from the one or more cameras and determine a control action for the at least one piece of equipment based on the received visual data.

3. The pool system of claim **2**, wherein the at least one piece of equipment comprises a cleaning device with one or more propulsion mechanisms, the cleaning device configured to travel adjacent to submerged or water-containing surfaces of the swimming pool or spa and to perform a cleaning operation.

4. The pool system of claim **2**, wherein the one or more cameras are mounted external to the swimming pool or spa.

5. The pool system of claim **2**, wherein the one or more cameras are mounted on the at least one piece of equipment.

6. The pool system of claim **2**, wherein the one or more cameras are submergible or submerged within the swimming pool or spa.

7. The pool system of claim **2**, wherein the controller is configured to detect a characteristic of the location based on the visual data and control the piece of equipment based on the detected characteristic.

8. The pool system of claim **7**, wherein the characteristic comprises a cleanliness of a surface of the swimming pool, and wherein the controller is configured to control the piece of equipment based on the detected cleanliness being outside of a threshold.

9. The pool system of claim **2**, wherein the controller is configured to communicate with the at least one piece of equipment and the one or more cameras via a wireless connection.

10. The pool system of claim **2**, wherein the controller is further configured to present a graphical depiction on a remote device based on the received visual data as the control action.

11. The pool system of claim **2**, wherein the controller is remote from the camera.

12. A method for monitoring a pool system, the method comprising:

receiving images of at least a portion of a location including a swimming pool or spa from one or more cameras;

determining a target area and detecting a characteristic of the target area based on the images; and

generating a control response based on the detected characteristic of the target area.

13. The method of claim **12**, wherein the target area comprises a portion of a surface of the swimming pool or spa, and wherein the characteristic comprises a cleanliness characteristic of the portion of the surface of the swimming pool or spa.

14. The method of claim **12**, wherein generating the control response comprises controlling an operation of a piece of equipment of the swimming pool or spa.

15. The method of claim **12**, wherein generating the control response comprises generating an alert on a remote device.

16. The method of claim **12**, wherein generating the control response comprises wirelessly communicating with a piece of equipment for the swimming pool or spa or a remote device.

17. The method of claim **12**, wherein generating the control response comprises prompting a user on a remote device, and wherein the method further comprises receiving a control input from the user on the remote device for controlling a piece of equipment of the swimming pool or spa.

18. The method of claim **17**, wherein prompting the user comprises providing recommended cleaning strategies for a cleaning device based on the detected characteristic of the target area.

19. The method of claim **12**, wherein generating the control response comprises controlling operation of a cleaning device configured to travel adjacent to submerged or water-containing surfaces of the swimming pool or spa and to perform a cleaning operation, wherein controlling operation of the cleaning device comprises one or more of controlling a path or route of the cleaning device, an aggressiveness of cleaning chemicals deployed, an aggressiveness of mechanical cleaning, or a speed of the cleaning device.

20. The method of claim **19**, wherein the characteristic of the target area is a presence of a person at the swimming pool or spa, and wherein generating the control response is based on the detected presence of the person satisfying a predefined characteristic.

* * * * *