Kilpatrick Townsend & Stockton LLP
ktslaw.com

Two Embarcadero Center, Suite 1900
San Francisco, CA 94111

June 4, 2024

direct dial 415 273 4741
direct fax 415 651 8510
smoore@ktslaw.com

By: Express Delivery and
E-Mail to ip@whosebilling.com

Wybotics Inc.
1108 S BALDWIN AVE, SUITE 208
ARCADIA, CA 91007

Wybotics Co., Ltd. (a.k.a. Tianjin Wangyuan Environmental Protection and Technology Co., Ltd.)
No. 30, 4th of Zhong Nan Street
West Zone, TEDA, Tianjin, China 300462

Re: Wybotics's Infringing Pool Cleaners Containing "Vision Tech"

To Whom It May Concern:

I represent Zodiac Pool Systems LLC, the owner of enclosed U.S. Patent Nos. 11,880,207; 11,262,766; 11,003,191; 10,739,785; 10,338,599; 9,995,051; 9,388,595; 11,828,082; and 11,519,732, attached as Exs. A–I, respectively.

It has come to our attention that Wybotics Inc. and/or Wybotics Co., Ltd. (a.k.a. Tianjin Wangyuan Environmental Protection and Technology Co., Ltd.) (collectively, "Wybotics") has been promoting and offering for sale one or more pool cleaners that infringe at least some of the above listed patents, including but not limited to the Wybot M2 Vision Tech High-end Cordless Robotic Pool Cleaner pictured below:

https://www.wybotpool.com/products/wybot-m2-high-end-cordless-robotic-pool-cleaner-pre-order.

As shown in the exemplary claim chart in Exhibit J to this letter, the Wybot M2 product contains all of the elements of at least claim 1 of U.S. Patent No. 11,880,207, which recites as follows:

> 1. A self-propelled pool cleaning system for cleaning debris from a submerged surface of a swimming pool, comprising:
>
> a. a vehicle body;
>
> b. means for moving the vehicle body within the swimming pool;
>
> c. a filter configured to retain debris collected from the submerged surface;
>
> d. at least one camera for capturing an image of at least a first object within the swimming pool; and
>
> e. a controller (i) in electronic communication with the at least one camera and (ii) configured to generate, in response to the captured image, at least one control signal to cause movement of the body within the swimming pool to, or away from, the first object.

Additionally, this product contains all of the elements of at least one claim in each of U.S. Patent Nos. 11,262,766 and 11,003,191, and possibly others.

Therefore, Wybotics's activities with respect to the above-referenced product and any products substantially similar to them in the United States, including but not limited to the manufacture, use, sale, offer for sale, or importation, infringes U.S. Patent Nos. 11,880,207; 11,262,766; and 11,003,191. Wybotics must cease this infringing conduct immediately.

Zodiac would also like to make Wybotics aware of the attached U.S. Patent Nos. 10,739,785; 10,338,599; 9,995,051; 9,388,595; 11,828,082; and 11,519,732, which also relate to pool cleaners and pool cleaning systems that utilize cameras or other sensing technologies. Zodiac reserves the right to assert infringement of any or all of these additional patents should further investigation reveal infringement.

Zodiac does not wish to engage in unneeded litigation. However, if this infringement is not ceased, Zodiac will have no choice but to enforce its intellectual property rights. As such, Zodiac expects written confirmation that Wybotics and any entity related thereto will contact me to discuss this matter immediately, including with respect to agreeing to cease its infringing activities. If Zodiac does not receive such confirmation within ten business

days of confirmed delivery to the first of the above addresses, Zodiac will understand that Wybotics's position is that it does not intend to address this issue, and Zodiac reserves all rights to take all actions available to it, including but not limited to enforcement of any of the patents mentioned herein.

Best regards,

Steven D. Moore
Partner

Enclosures: Exhibits A-J

061223\1437778

cc: Christopher S. Leah (cleah@ktslaw.com)

EXHIBIT A

US011880207B2

(12) **United States Patent**
Durvasula et al.

(10) **Patent No.: US 11,880,207 B2**
(45) **Date of Patent: *Jan. 23, 2024**

(54) **POOL CLEANING SYSTEM AND METHOD TO AUTOMATICALLY CLEAN SURFACES OF A POOL USING IMAGES FROM A CAMERA**

(71) Applicant: **ZODIAC POOL SYSTEMS LLC**, Carlsbad, CA (US)

(72) Inventors: **Kameshwar Durvasula**, Garfield, NJ (US); **William Londono Correa**, Bloomfield, NJ (US)

(73) Assignee: **ZODIAC POOL SYSTEMS LLC**, Carlsbad, CA (US)

(*) Notice: Subject to any disclaimer, the term of this patent is extended or adjusted under 35 U.S.C. 154(b) by 0 days.

This patent is subject to a terminal disclaimer.

(21) Appl. No.: **17/572,388**

(22) Filed: **Jan. 10, 2022**

(65) **Prior Publication Data**

US 2022/0129005 A1 Apr. 28, 2022

Related U.S. Application Data

(63) Continuation of application No. 17/143,624, filed on Jan. 7, 2021, now Pat. No. 11,262,766, which is a (Continued)

(51) **Int. Cl.**
G05D 1/02 (2020.01)
H04N 7/18 (2006.01)
(Continued)

(52) **U.S. Cl.**
CPC ..... ***G05D 1/0246*** (2013.01); ***E04H 4/1654*** (2013.01); ***G05D 1/0016*** (2013.01); (Continued)

(58) **Field of Classification Search**
CPC .. G05D 1/0246; G05D 1/0016; G05D 1/0033; G05D 1/0038; G05D 2201/0203; (Continued)

(56) **References Cited**

U.S. PATENT DOCUMENTS

5,205,174 A 4/1993 Silverman et al.
5,435,031 A 7/1995 Minami et al.
(Continued)

FOREIGN PATENT DOCUMENTS

CN 101139007 3/2008
EP 0687964 12/1995
(Continued)

OTHER PUBLICATIONS

U.S. Appl. No. 13/545,918, Corrected Notice of Allowability dated Jun. 8, 2016, 2 pages.
(Continued)

Primary Examiner — Allen C Wong
(74) *Attorney, Agent, or Firm* — Kilpatrick Townsend & Stockton LLP

(57) **ABSTRACT**

A pool cleaning system for cleaning debris from a submerged surface of a swimming pool includes a self-propelled pool cleaner having rotatably-mounted supports for supporting and guiding the cleaner on the pool surface; an electric motor for enabling the rotation of the rotatably-mounted supports on the pool surface; at least one camera to capture imagery of the pool surface; a controller, in electronic communication with the at least one camera, to determine a cleanliness characteristic of the pool surface on which the cleaner has passed based on the camera imagery and generate a control signal to direct movement of the cleaner based on the cleanliness characteristic of the pool surface, and a portable electronic device configured to present a graphic on a display, the graphic depicting the (Continued)

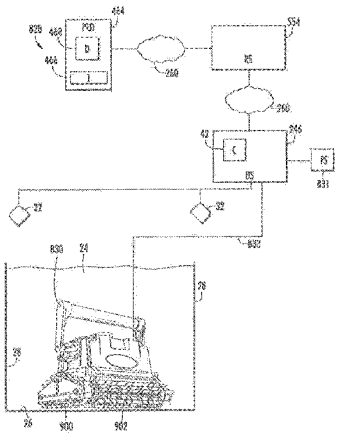

submerged surface of the pool and those portions of the surface that remain uncleaned as the cleaner traverses the pool surface.

20 Claims, 4 Drawing Sheets

Related U.S. Application Data

continuation of application No. 16/919,750, filed on Jul. 2, 2020, now Pat. No. 11,003,191, which is a continuation of application No. 16/416,840, filed on May 20, 2019, now Pat. No. 10,739,785, which is a continuation of application No. 15/973,983, filed on May 8, 2018, now Pat. No. 10,338,599, which is a continuation of application No. 15/207,065, filed on Jul. 11, 2016, now Pat. No. 9,995,051, which is a continuation of application No. 13/545,918, filed on Jul. 10, 2012, now Pat. No. 9,388,595.

(51) **Int. Cl.**

H04N 23/66	(2023.01)
E04H 4/16	(2006.01)
G05D 1/00	(2006.01)
H04N 23/50	(2023.01)
G06T 7/90	(2017.01)
G06T 7/00	(2017.01)

(52) **U.S. Cl.**
CPC ***G05D 1/0033*** (2013.01); ***G05D 1/0038*** (2013.01); ***H04N 7/18*** (2013.01); ***H04N 23/66*** (2023.01); *G05D 2201/0203* (2013.01); *G06T 7/001* (2013.01); *G06T 7/90* (2017.01); *G06T 2207/10024* (2013.01); *H04N 23/555* (2023.01)

(58) **Field of Classification Search**
CPC H04N 23/66; H04N 23/555; H04N 7/18; E04H 4/1654; G06T 7/90; G06T 7/001; G06T 2207/10024
USPC 348/114
See application file for complete search history.

(56) **References Cited**

U.S. PATENT DOCUMENTS

5,507,058	A	4/1996	Minami et al.	
5,613,261	A	3/1997	Kawakami et al.	
5,886,630	A	3/1999	Menoud	
7,123,746	B2	10/2006	Meniere et al.	
7,362,351	B2 *	4/2008	Meniere	G06T 7/20 348/135
7,398,138	B2	7/2008	Emery et al.	
7,993,600	B2	8/2011	Doyle et al.	
8,007,653	B2	8/2011	Porat	
8,043,070	B2	10/2011	Stiles, Jr. et al.	
9,388,595	B2	7/2016	Durvasula et al.	
9,995,051	B2	6/2018	Durvasula et al.	
10,338,599	B2	7/2019	Durvasula et al.	
10,739,785	B2	8/2020	Durvasula et al.	
11,003,191	B2	5/2021	Durvasula et al.	
11,262,766	B2	3/2022	Durvasula et al.	
2002/0097322	A1	7/2002	Monroe et al.	
2004/0025268	A1	2/2004	Porat et al.	
2004/0040581	A1	3/2004	Bruwer	
2007/0094817	A1	5/2007	Stoltz et al.	
2010/0299016	A1	11/2010	Benzler et al.	
2011/0049023	A1 *	3/2011	Hui	E04H 4/1654 210/138
2011/0091329	A1	4/2011	Stiles, Jr. et al.	
2011/0139727	A1	6/2011	Hui	
2011/0290707	A1 *	12/2011	Porat	G06Q 20/3255 204/229.4
2011/0301752	A1	12/2011	Finezilber	
2013/0151061	A1	6/2013	Hong et al.	
2013/0152970	A1	6/2013	Porat	
2013/0269097	A1	10/2013	Alammari	
2014/0009748	A1	1/2014	Leonessa et al.	

FOREIGN PATENT DOCUMENTS

EP	0811432	12/1997
JP	6162905	3/1986
WO	2004019295	3/2004
WO	2009031361	3/2009
WO	2012023676	2/2012

OTHER PUBLICATIONS

U.S. Appl. No. 13/545,918, Non-Final Office Action dated Jun. 26, 2015, 17 pages.
U.S. Appl. No. 13/545,918, Notice of Allowability dated Mar. 9, 2016, 8 pages.
U.S. Appl. No. 13/545,918, Notice of Allowance dated Dec. 31, 2015, 8 pages.
U.S. Appl. No. 15/207,065, Non-Final Office Action dated Nov. 6, 2017, 10 pages.
U.S. Appl. No. 15/207,065, Notice of Allowance dated Feb. 23, 2018, 9 pages.
U.S. Appl. No. 15/973,983, Non-Final Office Action dated Nov. 6, 2018, 7 pages.
U.S. Appl. No. 15/973,983, Notice of Allowance dated Mar. 4, 2019, 9 pages.
U.S. Appl. No. 16/416,840, Non-Final Office Action dated Feb. 28, 2020, 7 pages.
U.S. Appl. No. 16/416,840, Non-Final Office Action dated Jan. 15, 2020, 9 pages.
U.S. Appl. No. 16/416,840, Notice of Allowability dated Jun. 30, 2020, 2 pages.
U.S. Appl. No. 16/416,840, Notice of Allowance dated Apr. 29, 2020, 9 pages.
U.S. Appl. No. 16/919,750, Non-Final Office Action dated Oct. 6, 2020, 10 pages.
U.S. Appl. No. 16/919,750, Notice of Allowance dated Mar. 11, 2021, 10 pages.
U.S. Appl. No. 17/143,624, Non-Final Office Action dated Jul. 20, 2021, 18 pages.
U.S. Appl. No. 17/143,624, Notice of Allowance dated Dec. 24, 2021, 12 pages.
Spain Application No. ES2527883, Response to Substantive Examination dated May 5, 2016.
Spain Application No. ESP201331047, Search Report dated Feb. 3, 2015, 1 page.

* cited by examiner

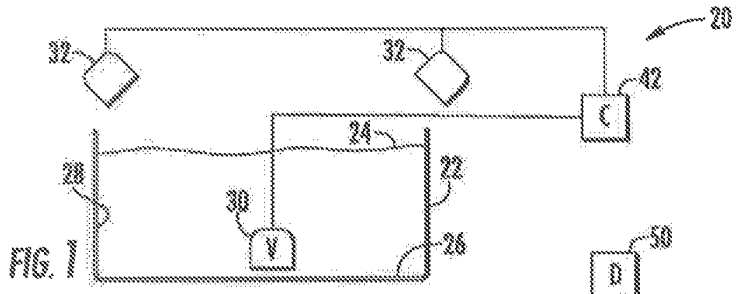

FIG. 1

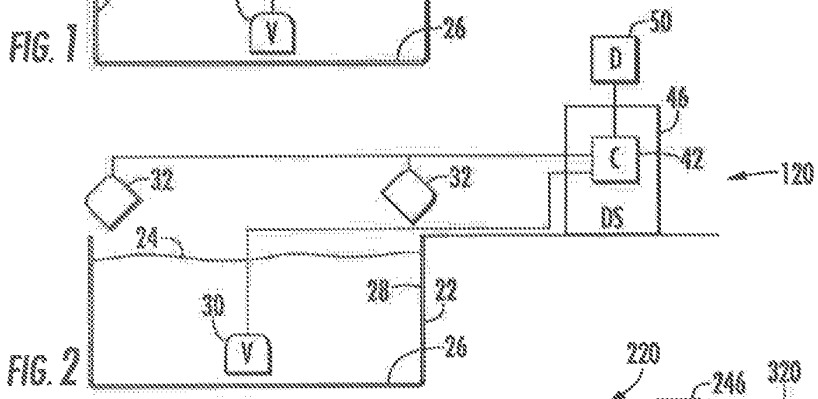

FIG. 2

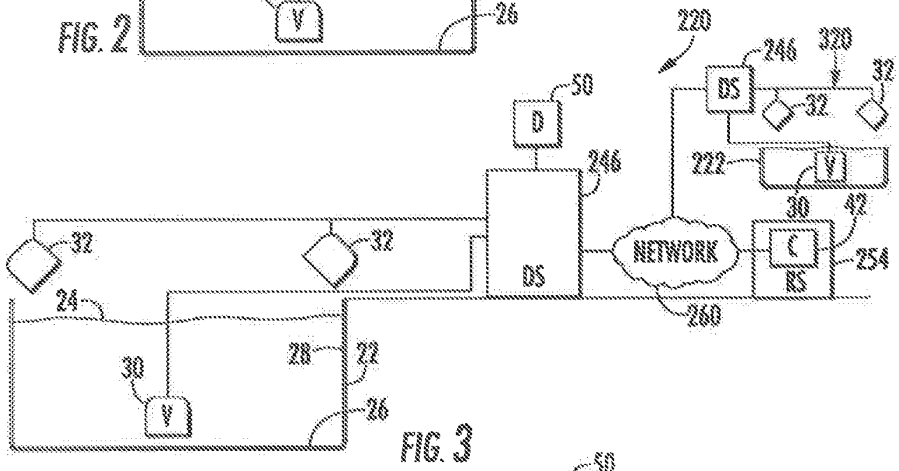

FIG. 3

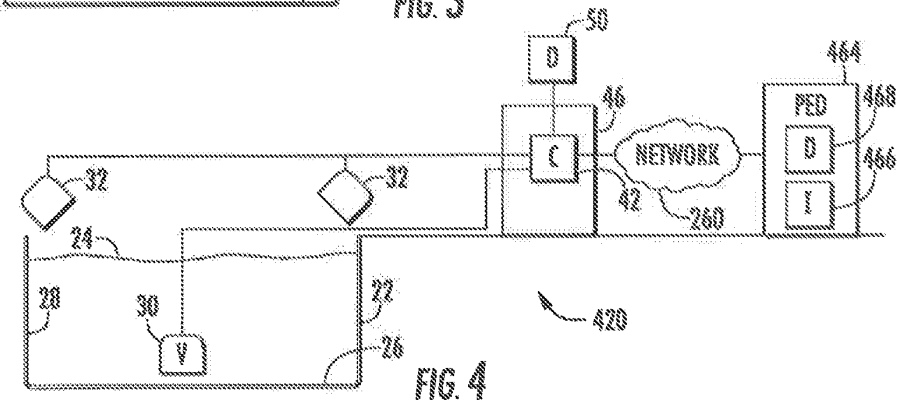

FIG. 4

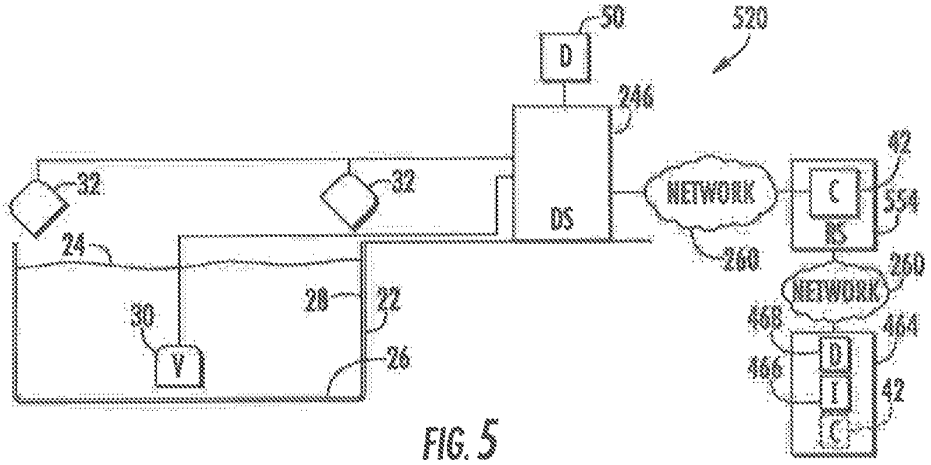

FIG. 5

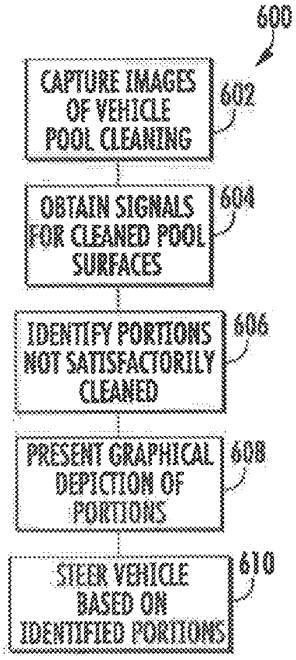

FIG. 6

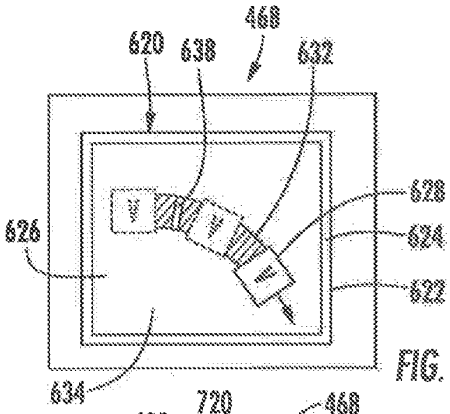

FIG. 7

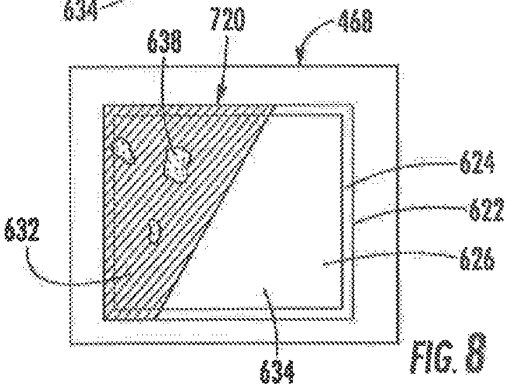

FIG. 8

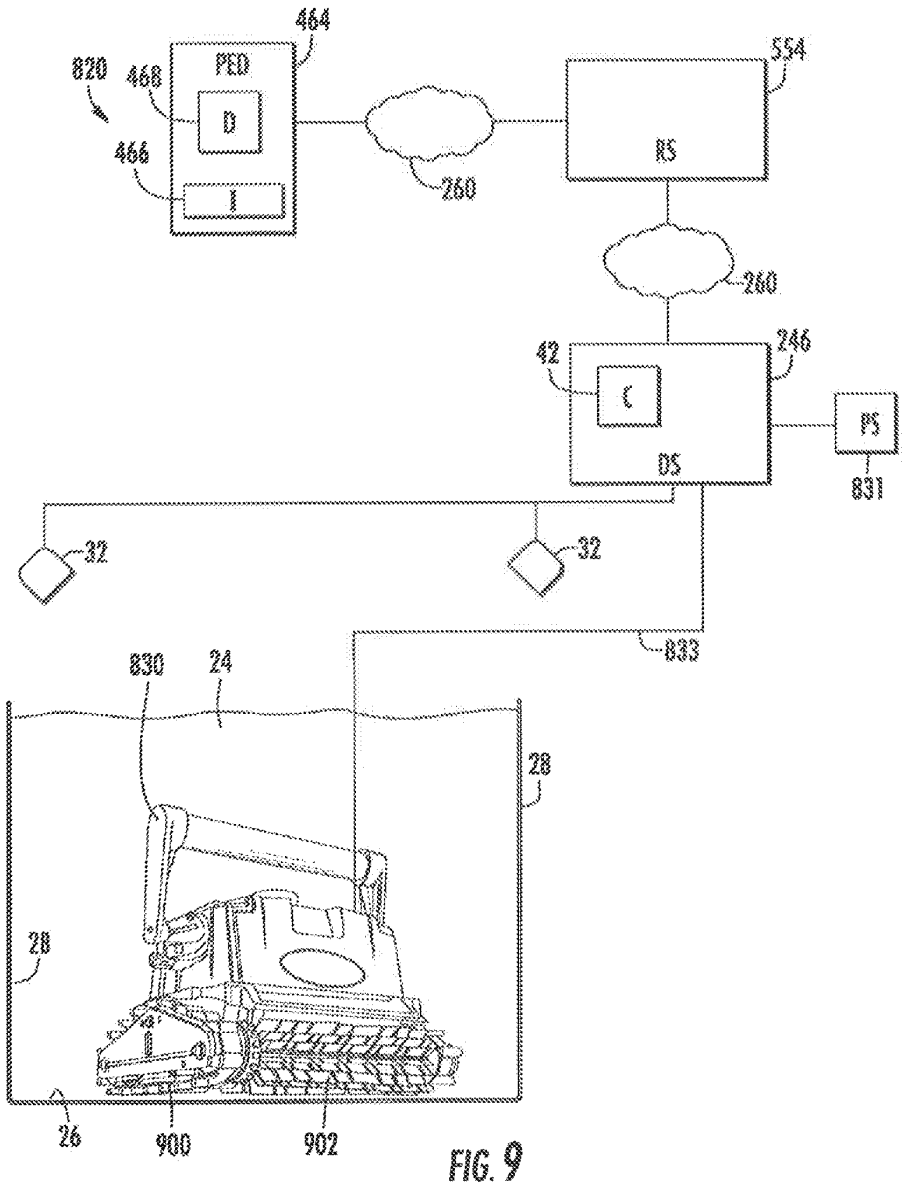
464
820
468
PED
D
466
I
260
554
RS
260
42
C
246
DS
PS
831
32
32
833
830
24
28
28
26
900
902

FIG. 9

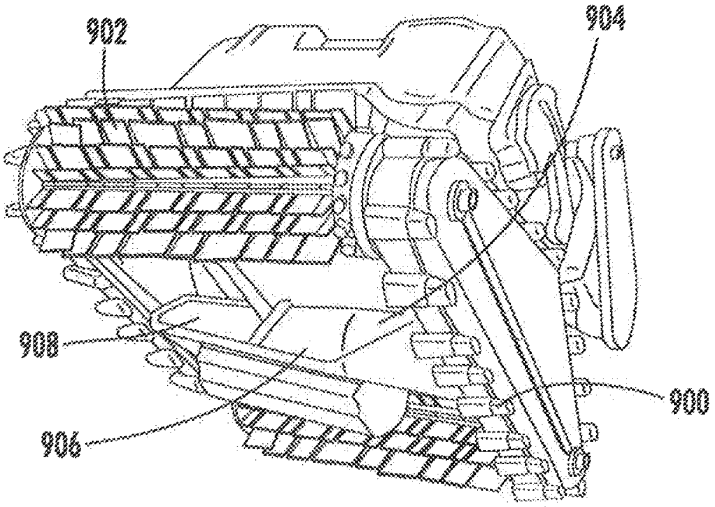

FIG. 10

POOL CLEANING SYSTEM AND METHOD TO AUTOMATICALLY CLEAN SURFACES OF A POOL USING IMAGES FROM A CAMERA

CROSS-REFERENCE TO RELATED APPLICATION

This application is a continuation of allowed U.S. patent application Ser. No. 17/143,624, filed Jan. 7, 2021, which is a continuation of U.S. patent application Ser. No. 16/919,750, filed Jul. 2, 2020 (now U.S. Pat. No. 11,003,191), which is a continuation of U.S. patent application Ser. No. 16/416,840, filed May 20, 2019 (now U.S. Pat. No. 10,739,785), which is a continuation of U.S. patent application Ser. No. 15/973,983, filed May 8, 2018 (now U.S. Pat. No. 10,338,599), which is a continuation of U.S. patent application Ser. No. 15/207,065, filed Jul. 11, 2016 (now U.S. Pat. No. 9,995,051), which is a continuation of U.S. patent application Ser. No. 13/545,918, filed Jul. 10, 2012 (now U.S. Pat. No. 9,388,595), the contents of all of which are incorporated herein by reference in their entireties.

BACKGROUND

Manually cleaning the floor and sides of a swimming pool may be a tedious and time-consuming task. As a result, automated robotic pool cleaners have been developed. However, controlling and monitoring such automated robotic pool cleaners to insure that all portions of the pool surfaces are satisfactorily cleaned remains a challenge.

SUMMARY OF THE INVENTION

The disadvantages heretofore associated with the prior art are overcome by the present invention of a pool cleaning system for cleaning debris from a submerged surface of a swimming pool comprising: a self-propelled pool cleaner having rotatably-mounted supports for supporting and guiding the cleaner on the pool surface; a filter configured to retain the debris collected from the submerged surface of the swimming pool; an electric motor for enabling the rotation of the rotatably-mounted supports on the pool surface; at least one camera to capture imagery of the pool surface; a controller, in electronic communication with the at least one camera, to determine a cleanliness characteristic of the pool surface on which the cleaner has passed based on the camera imagery and generate a control signal to direct movement of the cleaner based on the cleanliness characteristic of the pool surface; and a portable electronic device is configured to present a graphic on a display, the graphic depicting the submerged surface of the pool and those portions of the surface that remain uncleaned as the cleaner traverses the pool surface.

In one aspect, the at least one camera is carried by the cleaner. In another aspect, the controller is carried by the cleaner. In still another aspect, the electric motor is mechanically connected to at least one of the rotatably-mounted supports.

In yet another aspect, the controller is operable to execute one or more cleaning programs for cleaning the submerged surfaces of the pool. In one aspect, the control signal causes the cleaner to drive in a direction to clean a portion of the pool surface based on the cleanliness characteristic of the pool surface. Alternatively, the control signal causes the cleaner to steer in a direction to clean a portion of the pool surface based on the cleanliness characteristic of the pool surface. In another aspect, the control signal causes the cleaner to drive in a direction to re-clean a portion of the pool surface over which the cleaner has passed. Alternatively, the control signal causes the cleaner to steer in a direction to re-clean a portion of the pool surface over which the cleaner has passed.

In one aspect, the captured imagery from the at least one camera is digitally processed by the controller to determine the cleanliness characteristic of the pool surface. Alternatively, the captured imagery from the at least one camera is digitally processed by a remote processor to determine the cleanliness characteristic of the pool surface.

In another aspect, the system further comprises a dry station located remotely from the cleaner and in communication with the cleaner, wherein the dry station includes the controller. Alternatively, the system further comprises a dry station located remotely from the cleaner and in communication with the cleaner, wherein the controller is located remotely from the cleaner and the dry station. In still another aspect, the controller controls electric power provided to the electric motor.

In one aspect, the control signal causes the cleaner to move in a direction of a portion of the pool surface to be cleaned based solely upon signals received from the camera. In another aspect, the control signal causes the cleaner to drive in a direction to clean a portion of the pool surface based on the cleanliness characteristic of the pool surface. Alternatively, the control signal causes the cleaner to steer in a direction to clean a portion of the pool surface based on the cleanliness characteristic of the pool surface. In yet another aspect, the control signal causes the cleaner to drive in a direction to re-clean a portion of the pool surface over which the cleaner has passed. Alternatively, the control signal causes the cleaner to steer in a direction to re-clean a portion of the pool surface over which the cleaner has passed.

BRIEF DESCRIPTION OF THE DRAWINGS

FIG. **1** is a schematic illustration of an ex ample pool cleaning system.

FIG. **2** is a schematic illustration of an implementation of the pool cleaning system of FIG. **1**.

FIG. **3** is a schematic illustration of an implementation of the pool cleaning system of FIG. **1**.

FIG. **4** is a schematic illustration of an implementation of the pool cleaning system of FIG. **1**.

FIG. **5** is a schematic illustration of an implementation of the pool cleaning system of FIG. **1**.

FIG. **6** is a flow diagram of an example method that may be carried out with the pool cleaning system of FIG. **2-5**.

FIG. **7** is a plan view of an example display with an example graphical depiction.

FIG. **8** is a plan view of another example display with an example graphical depiction.

FIG. **9** is a schematic illustration of an implementation of the pool cleaning system of FIG. **1** with an example pool cleaning vehicle.

FIG. **10** is a bottom perspective view of the example pool cleaning vehicle of the system of FIG. **9**.

DETAILED DESCRIPTION OF THE EXAMPLE EMBODIMENTS

FIG. **1** schematically illustrates an example pool cleaning system **20**. As schematically shown by FIG. **1**, pool cleaning system **20** is adapted to clean submerged surfaces of a pool **22** containing a liquid **24**. In particular, pool cleaning system

20 is adapted to clean at least a bottom or floor surface 26 of the pool 22 and possibly to additionally clean surfaces 28 of pool 22. As will be described hereafter, pool cleaning system facilitates the control and monitoring of a robotic pool cleaner to better assure that all portions of pool 22 are satisfactorily cleaned.

Pool cleaning system 20 comprises vehicle 30, cameras 32 and controller 42. Vehicle 30 comprises an automated powered device configured to travel adjacent to submerged or water containing surfaces of pool 20 (such as floor 26 and/or side surfaces 28) while cleaning such surfaces. In one implementation, vehicle 30 may include vacuum or suction devices, a liquid circulation system and a filter to draw debris, such as bacterial growth or plant growth, from such pool surfaces, wherein the drawn liquid containing such residue or foreign matter is filtered to collect the debris. In other implementations, vehicle 30 may not collect such debris, wherein vehicle 30 merely loosens such debris on the pool surfaces such that the loosened or separated debris may be subsequently removed using the existing liquid filtering system of pool 22.

To assist in the loosening of debris, in one implementation, vehicle 30 may additionally include a chemical dispenser to closely apply pool cleaning chemicals to the pool surfaces as the vehicle 30 traverses such surfaces. In one implementation, vehicle 30 may additionally or alternatively include one or more scrubbing members, such as active (driven) or passive (undriven or idling) brushes, to assist in the removal of residue or foreign matter from such pool surfaces. In yet another implementation, vehicle 30 may additionally or alternatively include liquid jets to assist in the loosening of debris.

To move along the submerged surfaces of pool 22, vehicle 30 includes one or more propulsion mechanisms. In one implementation, vehicle 30 is propelled along the submerged pool surfaces using wheels, rollers, tracks or other surface contacting members powered by a motor and the like. Such wheels, rollers or tracks may themselves include the scrubbing members used to clean the surfaces. In one implementation vehicle 30 may also alternatively be propelled by means of the vacuum or liquid jet. The vacuum or liquid jets used for such propulsion nozzle facilitate loosening of debris for collection by vehicle 30. In other implementations, vehicle 30 may include other propulsion mechanisms.

Cameras 32 comprise devices configured to capture video or time lapse images of pool 22. In the example illustrated, cameras 32 are mounted on structures external to pool 22. In other words, cameras 32 are not submerged. In other implementations, cameras 32 may alternatively be mounted to vehicle 30. In the example illustrated, cameras 32 capture movement of vehicle 30 while vehicle 30 is submerged within pool 22. In other implementations, cameras 32 merely capture images of submerged surfaces 26, 28 of pool 22.

In the example illustrated, cameras 32 comprise cameras serving as part of a home or pool security system, wherein such cameras detect the presence of a person at pool 22 satisfying a predefined characteristic and wherein an alert is output upon the person's detected presence. For example, in one implementation, cameras 32 are utilized as part of a security system that detects when a person below a predefined age, such as a child, is present at pool 22 without a detected presence of a recognized adult. In another implementation, cameras 32 may detect the presence of an unauthorized person or intruder at pool 22. Identification of the person may be achieved by an off-site human or computerized monitoring system, wherein signals from cameras 32 are transmitted across a wide area network or may be achieved with software of controller 42 which includes facial recognition or other identification programming.

Because pool cleaning system 20 utilizes pre-existing cameras 32 provided as part of a security system or shares the use of cameras 32 with such a home or pool security system, pool cleaning system 20 is easier to set up, less complex and less expensive. In other implementations, pool cleaning system 20 may utilize dedicated cameras 22 independent of any cameras associated with a home, facility or pool security system. In such an alternative system, cameras 32 may be more precisely focused upon pool 22 and surfaces 26, 28 while also including appropriate lenses or modifications to account for glare, refraction and the like to better facilitate the capture of surfaces and vehicle 30 which are submerged.

Controller 42 comprises one or more processing units in communication with vehicle 30 and cameras 32. For purposes of this application, the term "processing unit" shall mean a presently developed or future developed processing unit that executes sequences of instructions contained in a memory. Execution of the sequences of instructions causes the processing unit to perform steps such as generating control signals. The instructions may be loaded in a random access memory (RAM) for execution by the processing unit from a read only memory (ROM), a mass storage device, or some other persistent storage. In other embodiments, hard wired circuitry may be used in place of or in combination with software instructions to implement the functions described. For example, controller 42 may be embodied as part of one or more application-specific integrated circuits (ASICs). Unless otherwise specifically noted, the controller is not limited to any specific combination of hardware circuitry and software, nor to any particular source for the instructions executed by the processing unit.

In one implementation, controller 42 communicates with vehicle 30 and cameras 32 entirely across a wired connection. In another implementation, controller 42 communicates with vehicle 30 and cameras 32 across a wireless connection, such as cross a local area network (LAN or a wide area network (WAN) such as the Internet. One of limitation, controller 42 may communicate with vehicle 30 and cameras 32 using a combination of both wired and wireless communication connections.

Controller 42 is configured to generate control signals for steering vehicle 30 based upon signals received from cameras 32. In one implementation, controller 42 provides the sole steering directions for vehicle 30 using signals from cameras 32. Because vehicle 30 is precisely steered under the control of controller 42, rather than traveling in a random manner, entire summer surfaces of pool 22 may be more quickly and efficiently covered and cleaned. Because controller 42 provides the only steering instructions for vehicle 30 and utilizes signals from cameras 32, complex steering algorithms or codes in either vehicle 30 or controller 42 may be omitted to reduce complexity and cost of system 20.

In another implementation, vehicle 30 may cover or travel across surfaces of pool 22 in either a random fashion or according to an automated pool coverage algorithm or pool coverage pattern stored in a memory associated with vehicle 30 or controller 42. In such an implementation, controller 42 utilizes signals from cameras 32 to verify that all of the surfaces of 22 have been cleaned, that no spots have been missed. Upon identifying a missed spot, controller 42 utilizes signals from camera 32 to steer vehicle 32 over such missed portions of surfaces 26, 28. According to one

example, controller **42** not only uses signals from camera **32** to determine whether any portions of surfaces **26**, **28** have been missed entirely, but to also determine whether any portions of surfaces **26**,**28** have been cleaned, but not to a satisfactory degree or extent. In such circumstances, controller **42** uses signals from cameras **32** to steer vehicle **34** such areas to re-clean such portions until such portions have been satisfactorily cleaned such that the portions have a cleanliness characteristic satisfying a predefined threshold.

FIG. **2** schematically illustrates pool cleaning system **120**, the particular example of pool cleaning system **20** described above. Pool cleaning system **120** is similar to pool cleaning system **20** except that pool cleaning system **120** additionally comprises dry station **46** and display **50**. Those remaining components of pool cleaning system **120** which correspond to components of pool cleaning system **20** are numbered similarly.

Dry station **46** comprises a station in communication with vehicle **30** and cameras **32** outside of pool **22**. Dry station **46** incorporates controller **42**. In one implementation, dry station **46** communicates with vehicle **30** in a wired fashion. In such an implementation, dry station **46** further provides electrical power to vehicle **30** in a wired fashion. Dry station **46** communicates with cameras **32** and either a wired or wireless fashion.

Display **50** comprises a device to present a graphical images and text on a display screen. In one implementation, display **58** may be incorporated as part of dry station **46**. In another implementation, display **50** may be provided on a portable electronic device, a computer, a television and the like. Display **50** is utilized by pool cleaning system **120** to present information regarding the cleaning of pool **22** to facilitate control of vehicle **30** by controller **42**. In one implementation, display **50** is utilized by pool cleaning system **120** and a controller **42** to present a graphical depiction of those portions of surfaces **26**, **28** of pool **22** have not been satisfactorily cleaned so as to satisfy a predefined cleanliness characteristic threshold. Such portions may comprise portions that have been completely missed by vehicle **30** as well as those portions that have been covered by vehicle **30** but have not been satisfactorily cleaned with the given number of passes of vehicle **30** or the existing cleaning settings of vehicle **30**. The graphical depiction presented on display **50** enables a person view the quality of the prior cleaning session and to input commands causing controller **42** to generate control signals using signals from camera **32** to steer vehicle **30** back to such identified portions where such portions may be cleaned at the same or elevated cleaning aggressiveness settings.

Another implementation, display **50** may be further utilized by controller **42** to depict the progress of vehicle **30** in cleaning pool **22**. Such a display **50** allows a person to visually determine how much of the pool has been currently cleaned and to estimate the remaining time before the pool cleaning task is completed. In certain circumstances, using display **50**, a person may adjust a setting of vehicle **30** to accelerate a rate at which surfaces **26**, **20** of pool **22** are cleaned to meet an earlier desired completion time for such pool cleaning.

FIG. **3** schematically illustrates pool cleaning system **220**, another example implementation of pool cleaning system **20**. Pool cleaning system **220** is similar to pool cleaning system **20** except that pool cleaning system **220** additionally comprises dry station **246**, display **50**, and remote server **254**. Those remaining components of pool cleaning system **220** which correspond to components of pool cleaning system **20** or pool cleaning system **120** are numbered similarly.

Dry station **246** is similar to dry station **46**, described above, except that dry station **246** serves as a local interface for communication with controller **42** across a network **260**. In one implementation, network **260** may comprise a local area network. In another implementation, network **260** may comprise a wide area network, such as the Internet. For example, in one implementation, dry station **246** may incorporate a modem. In one implementation, dry station **246** may communicate across a local area network to controller **42**. In another implementation, dry station **246** may communicate through a router, across a local area network, to a local modem which communicates across a network **260**. The example illustrated, dry station **246** further provides part of vehicle **30** across a wired cable or wired connection. Display **50** is described above with respect to system **120**.

Remote server **254** comprises a server remote from dry station **246** which is in communication with dry station **246** across network **260**. Remote server **254** includes controller **42**. During operation, signals from cameras **32** are transmitted across dry station **246** across network **260** to controller **42** of remote server **254**. Based upon such signals from cameras **32**, controller **42** generates control signals which are transmitted back across network **260** and through dry station **246** to vehicle **30** to steer vehicle **30**.

As shown by FIG. **3**, remote server **254** and network **260** may be shared as part of other pool cleaning systems **320**, wherein controller **42** generates control signals for steering the pool cleaning vehicle **30** of system **320** based upon signals from cameras **32** transmitted across dry station **246** of system **320**. In such an implementation, the cost and complexity of pool cleaning system **220** is reduced since controller **42** is remotely provided at remote server **254** which services multiple pool cleaning systems **220**,**320**. Upgrades to controller **42** and its software are also more easily achieved for all pool cleaning systems to **20**, **320** and their pools **22**, **222** being serviced. In one implementation, the supervised cleaning, inspection and possible re-cleaning facilitated by the use of cameras **32** may be provided as part of a subscription to users of vehicle **30**. In such an implementation, a pool **22** having security cameras **32** may be upgraded with appropriate software or an appropriate software module added to dry station **246** to make a network connection with controller **42** which directs the security cameras **32** to capture vehicle **30** utilizes such signals for steering vehicle **30**.

FIG. **4** schematically illustrates pool cleaning system **420**, another particular implementation of pool cleaning system **20**. Pool cleaning system **420** is similar to pool cleaning system **120** except that pool cleaning system **420** additionally comprises a portable electronic device **464**. Those remaining components of pool cleaning system **420** which correspond to components of pool cleaning system **120** are numbered similarly.

Portable electronic device **464** comprises a portable handheld electronic device in communication with controller **42** and/or dry station **46** across network **260**. Examples of such a portable electronic device (PED) **300** include, but are not limited to, a smart phone, a personal data assistant (PDA), laptop, notebook computer, tablet computer (e.g. IPAD) and MP3 player (e.g., IPOD TOUCH). In the example illustrated, PED **464** comprises input **466** and display **468**.

Input **466** serves as a user interface for PED **464** by which inputs are made to PED **464**. Input **466** facilitates entry of inputs or commands by a person to cause controller **42** to

generate control signals varying the control of vehicle **30**. In one implementation, input **466** comprise a keyboard. In other implementations, input **466** may comprise a touchpad, a stylus, a microphone with associated speech recognition software or programming, a touch screen, buttons, switches and the like. In some implementations, input **466** may comprise a touch screen incorporated as part of display **468**.

Display **468** comprises a user interface by which graphical or textual data is presented to a user. Display **468** may present the same or similar information as presented at dry station **246** by display **50** as described above. In one implementation, display **468** comprises a liquid crystal display. In other implementations, display **468** may comprise other types of display technology such as a light emitting diode display, an organic light emitting diode display (OLEDD), an electronic ink (e-ink) display or other types of display technology in present use or developed in the future. Although system **420** is illustrated as including controller **422** is part of dry station **46**, in some implementations, controller **42** may alternatively be located as part of PED **464**.

PED **464** enables a person located remote from pool **22** to monitor the progress of the cleaning of pool **22** by vehicle **30** of system **420**. PED **464** provides a person with a graphical presentation (described above with respect to display **50**) indicating those portions of surfaces **26**, **28** of pool **22** that have been completed as well as those portions **26**, **20** and that remain to be cleaned. The person may also be provided with a graphical indication of what portions need to be re-cleaned to meet predetermined cleanliness thresholds. In the example illustrated, input **466** enables a person to enter commands or selections which are transmitted across network **260** to controller **42** to adjust operation of vehicle **30**. For example, the path or route of vehicle **30** may be changed, the aggressiveness of the cleaning chemicals or mechanical cleaning devices may be adjusted, the speed at which vehicle **30** traverses surfaces **26**, **28** may be adjusted. In response to such adjustment signals from PED **464**, controller **42** may utilize signals from cameras **32** to adjust the steering of vehicle **30**.

FIG. **5** schematically illustrates pool cleaning system **520**, another example implementation of pool cleaning system **20**. Pool cleaning system **520** is similar to pool cleaning system **420** except that pool cleaning system **520** additionally comprises a remote server **554**. Those remaining components of pool cleaning system **520** which correspond to components of pool cleaning system **420** are numbered similarly.

Remote server **554** is similar to remote server **254** described above with respect to system **220**. Remote server **554** comprises a server remote from dry station **246** which is in communication with dry station **246** across network **260**. Remote server **254** includes controller **42**. During operation, signals from cameras **32** are transmitted across dry station **246** across network **260** to controller **42** of remote server **254**. Based upon such signals from cameras **32**, controller **42** generates control signals which are transmitted back across network **260** and through dry station **246** to vehicle **30** to steer vehicle **30**. Controller **42** further relays either the raw signals from camera **32** or image signals generated based upon signals from cameras **32** to PED **464**, wherein such images (described above) are presented on display **468**. As noted above, PED may further receive commands through input **466**, wherein such commands are transmitted to controller **42** which generates control signals that are ultimately transmitted to vehicle **30** for steering vehicle **30**.

As with remote server **254**, remote server **554** and network **260** may be shared as part of other pool cleaning systems **320** (shown in FIG. **3**), wherein controller **42** generates control signals for steering the pool cleaning vehicle **30** of system **320** based upon signals from cameras **32** transmitted across dry station **246** of system **320**. In such implementations, controller **42** of remote server **554** may interact with other PEDs **464**. In such an implementation, the cost and complexity of pool cleaning system **220** is reduced since controller **42** is remotely provided at remote server **254** which services multiple pool cleaning systems **220**, **320**. Upgrades to controller **42** and its software are also more easily achieved for all pool cleaning systems to **20**, **320** and their pools **22**, **222** being serviced. In one implementation, the supervised cleaning, inspection and possible re-cleaning facilitated by the use of cameras **32** may be provided as part of a subscription to users of vehicle **30**. In such an implementation, a pool **22** having security cameras **32** may be upgraded with appropriate software or an appropriate software module added to dry station **246** to make a network connection with controller **42** which directs the security cameras **32** to capture vehicle **30** utilizes such signals for steering vehicle **30**. As indicated by broken lines, in other implementations, the controller **42** for generating control signals steering vehicle **30** based upon signals from cameras **32** may alternatively be relocated in PED **464**.

FIG. **6** is a flow diagram illustrating an example method **600** that may be carried out by any of systems **120-520**. As indicated by step **602**, cameras **32** capture images of pool cleaning by vehicle **30**. As indicated by step **604**, controller **42** obtain such signals from cameras **32** for the surfaces of pool **22** that have been cleaned. As indicated by step **606**, controller **42** uses information gathered from the signals from cameras **32** to identify those portions of surfaces **26**, **28** not satisfactorily cleaned not satisfying a predefined cleanliness characteristic or measurement threshold. One example of a cleanliness characteristic measurement a threshold may be how well the color of a surface matches a predetermined desirable color for the pool surface (such as original color of the tile or surface). A surface that has been missed entirely by vehicle **30** during a pool cleaning session may be automatically deemed to not satisfy a predetermined cleanliness characteristic.

As indicated by step **608**, based upon such determinations, controller **42** generates control signals resulting in the presentation of a graphical depiction of those portions of pool **22** that has not been satisfactorily cleaned. Such graphical representations or depictions may be presented on display **50** or display **468**. FIGS. **7** and **8** illustrate examples of graphical depictions that may be presented.

FIG. **7** illustrates display **468** presenting graphical depiction **620**. Graphical depiction **620** comprises a first graphic **622** having a first portion **624** representing sides or walls **28** of pool **22** and a second portion **626** representing the floor **26** of pool **22**. Graphical depiction **620** further comprises a moving icon **628** representing the current positioning of vehicle **30**. In one implementation, the path of vehicle **30** may additionally be depicted by icon **628** shown in broken lines. As shown by FIG. **7**, those portions **632** of surfaces **26**, **28** of pool **22** (shown in FIG. **1**) over which of vehicle **30** has moved are identified by graphical depiction **620** either by color, markings or other various distinctive attributes. Likewise, those portions **634** of surfaces **26**, **28** of pool **22** that have not been covered by vehicle **30** are identified by a distinct color col marking or distinctive attribute of depiction **620**. As a result, a person may view the current position of vehicle **30**, the extent to which pool **22** has been cleaned

or covered by vehicle **30** and the extent of pool **22** that remains to be cleaned. In the example illustrated, depiction **620** further identifies those portions **638** of surfaces **26**, **28** that have been cleaned, but which have not been cleaned to a satisfactory degree or extent. In one implementation, portions **638** may be identified by colors, brightness, markings or other visually distinctive attributes that are visually distinct from both portions **632** and portions **634**. In other implementations, portions **638** may have the same characteristic of portions **634**. In yet other implementations, different portions **638** may have different visual attributes depending upon a degree to which such clean portions have failed to satisfy the predefined cleanliness characteristic threshold. In some implementations, different port **638** may have different visual attributes depending upon different cleaning strategies that may be recommended for the different portions **638**. For example, controller **42** may determine and recommend a first cleaning strategy (a first chemical solution jetted at a first rate and scrubbed at a first rate) with respect to a first portion **638** and may recommend a second different cleaning strategy (a second chemical solution jetted at a second rate is about a second rate) with respect to a second portion **638**, wherein the different cleaning strategies are represented by different visual attributes presented in depiction **620**.

FIG. **8** illustrates display **468** presenting a graphical depiction **720**. Graphical depiction **720** comprises a first graphic **622** having a first portion **624** representing sides or walls **28** of pool **22** and a second portion **626** representing the floor **26** of pool **22** (shown in FIG. **1**). Graphical depiction **720** is similar to graphical depiction **620** except that graphical depiction **720** omits icon **628** presenting vehicle **30**. Like depiction **620**, depiction **720** graphically depicts those portions **632** of surfaces **26**, **28** over which vehicle **30** has traveled while in a cleaning mode. Depiction **720** also visually depicts those portions **634** that have not been covered by vehicle **30** in the cleaning mode and those portions **638** over Which vehicle **30** has traveled while in the cleaning mode, but which have not been cleaned to a satisfactory degree. As illustrated in FIG. **8**, different portions **638** may be visibly distinguished from one another through color, text or markings indicating either differences in the cleanliness of such portions **638** or indicating different recommended cleaning strategies or approaches that may be selected by a person using input **466** when vehicle **30** is steered back to such portions **638** for re-cleaning using signals from camera **32**.

As indicated by step **610** of FIG. **6**, controller **42** generates control signals steering vehicle **30** to re-clean portions of pool **22**, such as portions **638**. Such steering may be facilitated by using signals from cameras **32**. As noted above, in some implementations, a person may be allowed Choose a cleaning approach for a particular portion **638** using input **466**. The selection may be facilitated by visual inspection of the different visual attributes for the particular portion **638** provided by depiction **720** (or depiction **620**). In some implementations, input **466** may additionally be utilized by a person to prioritize an order in Which portions **638** are re-cleaned.

FIG. **9** illustrates pool cleaning system **820**, an example implementation of pool cleaning system **20**. Pool cleaning system **820** is similar to pool cleaning system **520** except the pool cleaning system **820** located controller **42** in dry station **246** and includes pool cleaning vehicle **830**, a specific example of vehicle **30**. As shown by FIG. **9**, in addition to transmitting control signals generated by controller **42** to vehicle **830**, dry station **246** further transmits power from power source **831** through a power line or power cable **833** to vehicle **830**. In the example illustrated, data communication and communication of control signals, also occurs across wired connections within or alongside the same line **833**. In the example illustrated, remote server **554** serves as a communication link by which upgrades to controller **42** may be implemented across a wide number of pool cleaning systems and by which information from controller **42** is conveyed to one or more portable electronic devices **464** across network **260**.

Vehicle **830** comprises a robotic or automated pool cleaning device. Vehicle **830** comprises a self-contained onboard filtration system with drive and pump motors. Vehicle **830** utilizes an internal microprocessor guided drive motor to systematically clean surfaces of pool **22**. As shown by FIGS. **9** and **10**, vehicle **830** utilizes a toothed track drive **900** provide traction and propulsion for vehicle **30**. Vehicle **830** comprises rotating brushes **902** to loosen waterline buildup and breakdown large debris while power washing jets **904** flush out dirt from pores, seems in corners where brushes **902** may not be able to reach. The loosened dirt and debris is vacuumed through off-center vacuum ports **906** which passes the vacuumed debris through internally house filter bag. In the example illustrated, vehicle **830** further comprises rollers **908** which inhibit vehicle **830** from becoming impeded or stuck on raised drains or pop-up heads. Although illustrated as being employed with system **820**, vehicle **830** may also be utilized with any of systems **20**, **120**, **220**, **320** and **420**. In other implementations, other robotic or automated pool cleaning vehicles may be utilized.

Although the present disclosure has been described with reference to example embodiments, workers skilled in the art will recognize that changes may be made in form and detail without departing from the spirit and scope of the claimed subject matter. For example, although different example embodiments may have been described as including one or more features providing one or in ore benefits, it is contemplated that the described features may be interchanged with one another or alternatively be combined with one another in the described example embodiments or in other alternative embodiments. Because the technology of the present disclosure is relatively complex, not all changes in the technology are foreseeable. The present disclosure described with reference to the example embodiments and set forth in the following claims is manifestly intended to be as broad as possible. For example, unless specifically otherwise noted, the claims reciting a single particular element also encompass a plurality of such particular elements.

What is claimed is:

1. A self-propelled pool cleaning system for cleaning debris from a submerged surface of a swimming pool, comprising:

a. a vehicle body;

b. means for moving the vehicle body within the swimming pool;

c. a filter configured to retain debris collected from the submerged surface;

d. at least one camera for capturing an image of at least a first object within the swimming pool; and

e. a controller (i) in electronic communication with the at least one camera and (ii) configured to generate, in response to the captured image, at least one control signal to cause movement of the body within the swimming pool to, or away from, the first object.

2. A pool system comprising:

at least one piece of equipment for a swimming pool or spa;

one or more cameras configured to capture video or images of at least a portion of a location including the swimming pool or spa; and

a controller in communication with the at least one piece of equipment and the one or more cameras, the controller configured to receive visual data from the one or more cameras and determine a control action for the at least one piece of equipment based on the received visual data.

3. The pool system of claim **2**, wherein the at least one piece of equipment comprises a cleaning device with one or more propulsion mechanisms, the cleaning device configured to travel adjacent to submerged or water-containing surfaces of the swimming pool or spa and to perform a cleaning operation.

4. The pool system of claim **2**, wherein the one or more cameras are mounted external to the swimming pool or spa.

5. The pool system of claim **2**, wherein the one or more cameras are mounted on the at least one piece of equipment.

6. The pool system of claim **2**, wherein the one or more cameras are submergible or submerged within the swimming pool or spa.

7. The pool system of claim **2**, wherein the controller is configured to detect a characteristic of the location based on the visual data and control the piece of equipment based on the detected characteristic.

8. The pool system of claim **7**, wherein the characteristic comprises a cleanliness of a surface of the swimming pool, and wherein the controller is configured to control the piece of equipment based on the detected cleanliness being outside of a threshold.

9. The pool system of claim **2**, wherein the controller is configured to communicate with the at least one piece of equipment and the one or more cameras via a wireless connection.

10. The pool system of claim **2**, wherein the controller is further configured to present a graphical depiction on a remote device based on the received visual data as the control action.

11. The pool system of claim **2**, wherein the controller is remote from the camera.

12. A method for monitoring a pool system, the method comprising:

receiving images of at least a portion of a location including a swimming pool or spa from one or more cameras;

determining a target area and detecting a characteristic of the target area based on the images; and

generating a control response based on the detected characteristic of the target area.

13. The method of claim **12**, wherein the target area comprises a portion of a surface of the swimming pool or spa, and wherein the characteristic comprises a cleanliness characteristic of the portion of the surface of the swimming pool or spa.

14. The method of claim **12**, wherein generating the control response comprises controlling an operation of a piece of equipment of the swimming pool or spa.

15. The method of claim **12**, wherein generating the control response comprises generating an alert on a remote device.

16. The method of claim **12**, wherein generating the control response comprises wirelessly communicating with a piece of equipment for the swimming pool or spa or a remote device.

17. The method of claim **12**, wherein generating the control response comprises prompting a user on a remote device, and wherein the method further comprises receiving a control input from the user on the remote device for controlling a piece of equipment of the swimming pool or spa.

18. The method of claim **17**, wherein prompting the user comprises providing recommended cleaning strategies for a cleaning device based on the detected characteristic of the target area.

19. The method of claim **12**, wherein generating the control response comprises controlling operation of a cleaning device configured to travel adjacent to submerged or water-containing surfaces of the swimming pool or spa and to perform a cleaning operation, wherein controlling operation of the cleaning device comprises one or more of controlling a path or route of the cleaning device, an aggressiveness of cleaning chemicals deployed, an aggressiveness of mechanical cleaning, or a speed of the cleaning device.

20. The method of claim **19**, wherein the characteristic of the target area is a presence of a person at the swimming pool or spa, and wherein generating the control response is based on the detected presence of the person satisfying a predefined characteristic.

* * * * *

EXHIBIT B

US011262766B2

(12) **United States Patent**
Durvasula et al.

(10) **Patent No.: US 11,262,766 B2**
(45) **Date of Patent: *Mar. 1, 2022**

(54) **POOL CLEANING SYSTEM AND METHOD TO AUTOMATICALLY CLEAN SURFACES OF A POOL USING IMAGES FROM A CAMERA**

(71) Applicant: **ZODIAC POOL SYSTEMS LLC**, Carlsbad, CA (US)

(72) Inventors: **Kameshwar Durvasula**, Garfield, NJ (US); **William Londono Correa**, Bloomfield, NJ (US)

(73) Assignee: **ZODIAC POOL SYSTEMS LLC**, Carlsbad, CA (US)

(*) Notice: Subject to any disclaimer, the term of this patent is extended or adjusted under 35 U.S.C. 154(b) by 0 days.

This patent is subject to a terminal disclaimer.

(21) Appl. No.: **17/143,624**

(22) Filed: **Jan. 7, 2021**

(65) **Prior Publication Data**

US 2021/0124366 A1 Apr. 29, 2021

Related U.S. Application Data

(63) Continuation of application No. 16/919,750, filed on Jul. 2, 2020, now Pat. No. 11,003,191, which is a (Continued)

(51) **Int. Cl.**
G05D 1/02 (2020.01)
H04N 7/18 (2006.01)
(Continued)

(52) **U.S. Cl.**
CPC ..... ***G05D 1/0246*** (2013.01); ***E04H 4/1654*** (2013.01); ***G05D 1/0016*** (2013.01); (Continued)

(58) **Field of Classification Search**
CPC .. G05D 1/0246; G05D 1/0016; G05D 1/0033; G05D 1/0038; G05D 2201/0203; (Continued)

(56) **References Cited**

U.S. PATENT DOCUMENTS

5,205,174 A 4/1993 Silverman et al.
5,435,031 A 7/1995 Minami et al.
(Continued)

FOREIGN PATENT DOCUMENTS

CN 101139007 3/2008
EP 0687964 12/1995
(Continued)

OTHER PUBLICATIONS

U.S. Appl. No. 13/545,918, Corrected Notice of Allowability, dated Jun. 8, 2016, 2 pages.
(Continued)

Primary Examiner — Allen C Wong
(74) *Attorney, Agent, or Firm* — Kilpatrick Townsend & Stockton LLP

(57) **ABSTRACT**

A pool cleaning system for cleaning debris from a submerged surface of a swimming pool includes a self-propelled pool cleaner having rotatably-mounted supports for supporting and guiding the cleaner on the pool surface; an electric motor for enabling the rotation of the rotatably-mounted supports on the pool surface; at least one camera to capture imagery of the pool surface; a controller, in electronic communication with the at least one camera, to determine a cleanliness characteristic of the pool surface on which the cleaner has passed based on the camera imagery and generate a control signal to direct movement of the cleaner based on the cleanliness characteristic of the pool surface, and a portable electronic device configured to present a graphic on a display, the graphic depicting the (Continued)

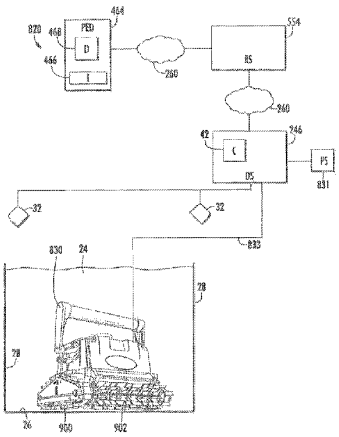

submerged surface of the pool and those portions of the surface that remain uncleaned as the cleaner traverses the pool surface.

5 Claims, 4 Drawing Sheets

Related U.S. Application Data

continuation of application No. 16/416,840, filed on May 20, 2019, now Pat. No. 10,739,785, which is a continuation of application No. 15/973,983, filed on May 8, 2018, now Pat. No. 10,338,599, which is a continuation of application No. 15/207,065, filed on Jul. 11, 2016, now Pat. No. 9,995,051, which is a continuation of application No. 13/545,918, filed on Jul. 10, 2012, now Pat. No. 9,388,595.

(51) **Int. Cl.**

H04N 5/232	(2006.01)
E04H 4/16	(2006.01)
G05D 1/00	(2006.01)
H04N 5/225	(2006.01)
G06T 7/90	(2017.01)
G06T 7/00	(2017.01)

(52) **U.S. Cl.**
CPC ***G05D 1/0033*** (2013.01); ***G05D 1/0038*** (2013.01); ***H04N 5/23203*** (2013.01); ***H04N 7/18*** (2013.01); *G05D 2201/0203* (2013.01); *G06T 7/001* (2013.01); *G06T 7/90* (2017.01); *G06T 2207/10024* (2013.01); *H04N 2005/2255* (2013.01)

(58) **Field of Classification Search**
CPC E04H 4/1654; H04N 5/23203; H04N 7/18; H04N 2005/2255; G06T 7/90; G06T 7/001; G06T 2207/10024
USPC 348/114
See application file for complete search history.

(56) **References Cited**

U.S. PATENT DOCUMENTS

5,507,058	A	4/1996	Minami et al.	
5,613,261	A	3/1997	Kawakami et al.	
5,886,630	A	3/1999	Menoud	
7,123,746	B2	10/2006	Meniere et al.	
7,362,351	B2 *	4/2008	Meniere	G01V 8/10 348/135
7,398,138	B2	7/2008	Emery et al.	
7,993,600	B2	8/2011	Doyle et al.	
8,007,653	B2	8/2011	Porat	
8,043,070	B2	10/2011	Stiles, Jr. et al.	
9,388,595	B2	7/2016	Durvasula et al.	
9,995,051	B2	6/2018	Durvasula et al.	
10,338,599	B2	7/2019	Durvasula et al.	
10,739,785	B2	8/2020	Durvasula et al.	
11,003,191	B2	5/2021	Durvasula et al.	
2002/0097322	A1	7/2002	Monroe et al.	
2004/0025268	A1	2/2004	Porat et al.	
2004/0040581	A1	3/2004	Bruwer	
2007/0094817	A1	5/2007	Stoltz et al.	
2010/0299016	A1	11/2010	Benzler et al.	
2011/0049023	A1 *	3/2011	Hui	E04H 4/1654 210/91
2011/0091329	A1	4/2011	Stiles, Jr. et al.	
2011/0139727	A1 *	6/2011	Hui	C02F 1/688 210/749
2011/0290707	A1 *	12/2011	Porat	C02F 1/4674 210/96.1
2011/0301752	A1	12/2011	Finezilber	
2013/0151061	A1	6/2013	Hong et al.	
2013/0152970	A1	6/2013	Porat	
2013/0269097	A1	10/2013	Alammari	
2014/0009748	A1	1/2014	Leonessa et al.	

FOREIGN PATENT DOCUMENTS

EP	0811432		12/1997	
JP	6162905		3/1986	
WO	2004019295		3/2004	
WO	2009031361		3/2009	
WO	2012023676		2/2012	
WO	WO-2012/023676	A1 *	2/2012	E04H 4/16
WO	WO 2012/023676	A1 *	3/2012	E04H 4/16

OTHER PUBLICATIONS

U.S. Appl. No. 13/545,918, Non-Final Office Action, dated Jun. 26, 2015, 17 pages.
U.S. Appl. No. 13/545,918, Notice of Allowability, dated Mar. 9, 2016, 8 pages.
U.S. Appl. No. 13/545,918, Notice of Allowance, dated Dec. 31, 2015, 8 pages.
U.S. Appl. No. 15/207,065, Non-Final Office Action, dated Nov. 6, 2017, 10 pages.
U.S. Appl. No. 15/207,065, Notice of Allowance, dated Feb. 23, 2018, 9 pages.
U.S. Appl. No. 15/973,983, Non-Final Office Action, dated Nov. 6, 2018, 7 pages.
U.S. Appl. No. 15/973,983, Notice of Allowance, dated Mar. 4, 2019, 9 pages.
U.S. Appl. No. 16/416,840, Non-Final Office Action, dated Feb. 28, 2020, 7 pages.
U.S. Appl. No. 16/416,840, Non-Final Office Action, dated Jan. 15, 2020, 9 pages.
U.S. Appl. No. 16/416,840, Notice of Allowability, dated Jun. 30, 2020, 2 pages.
U.S. Appl. No. 16/416,840, Notice of Allowance, dated Apr. 29, 2020, 9 pages.
U.S. Appl. No. 16/919,750, Non-Final Office Action, dated Oct. 6, 2020, 10 pages.
Spain Application No. 2527883, Response to Substantive Examination, dated May 5, 2016.
Spain Application No. 201331047, Search Report, dated Feb. 3, 2015, 1 page.
U.S. Appl. No. 16/919,750, Notice of Allowance dated Mar. 11, 2021, 10 pages.

* cited by examiner

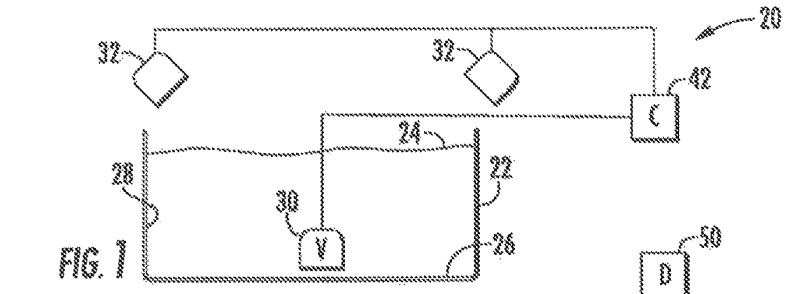

FIG. 1

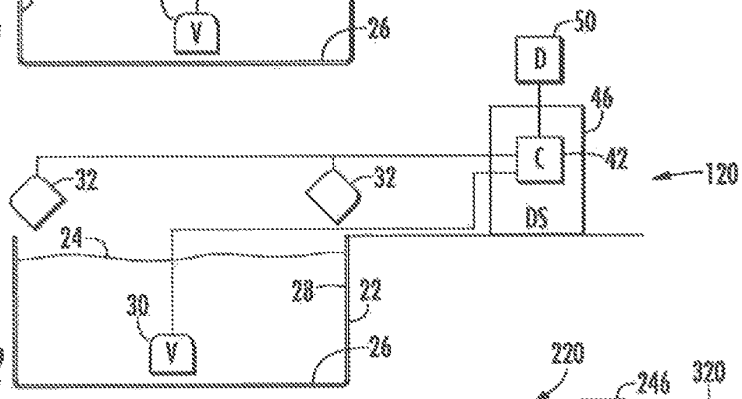

FIG. 2

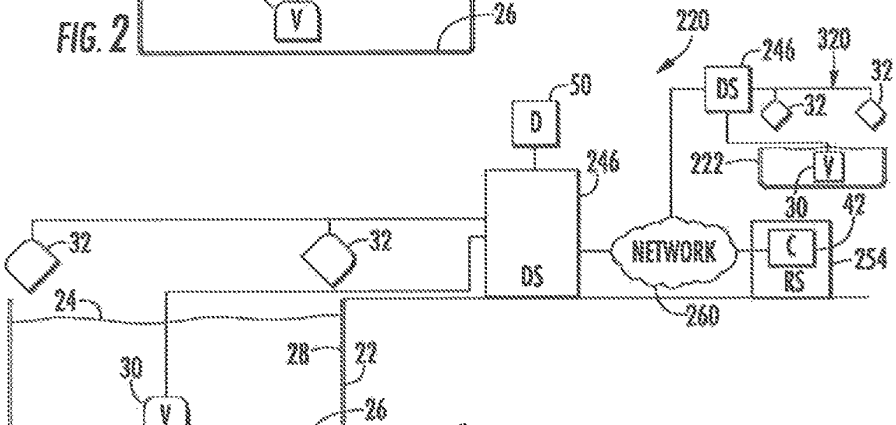

FIG. 3

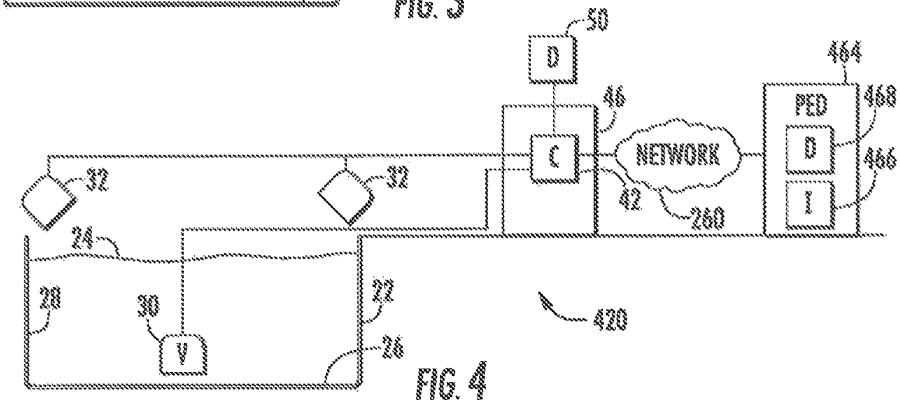

FIG. 4

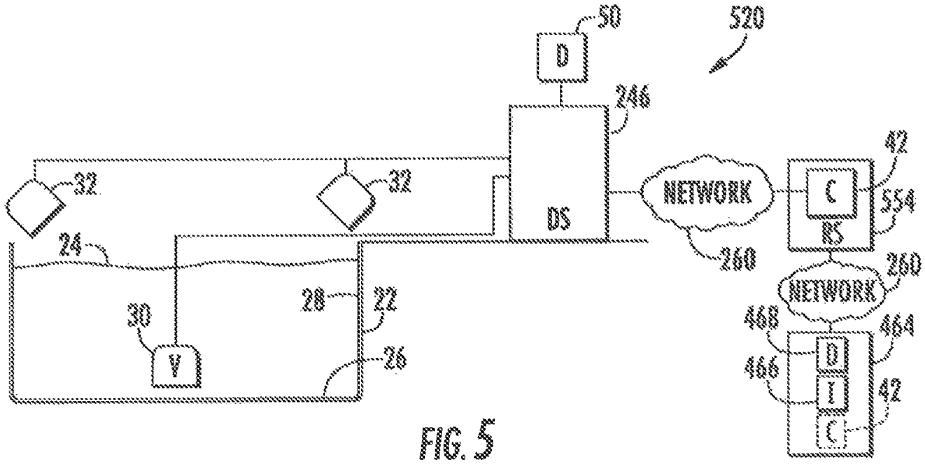

FIG. 5

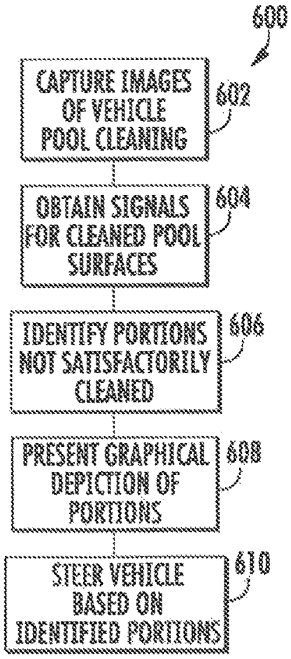

FIG. 6

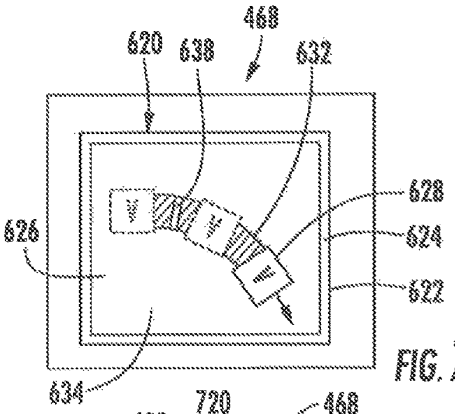

FIG. 7

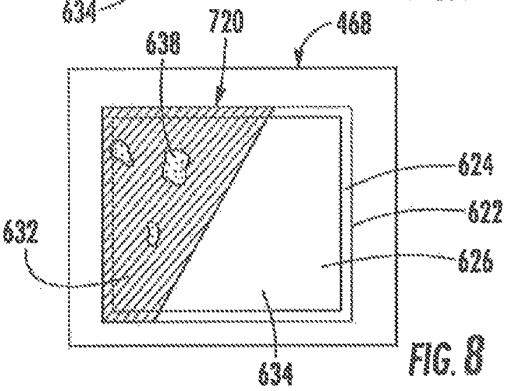

FIG. 8

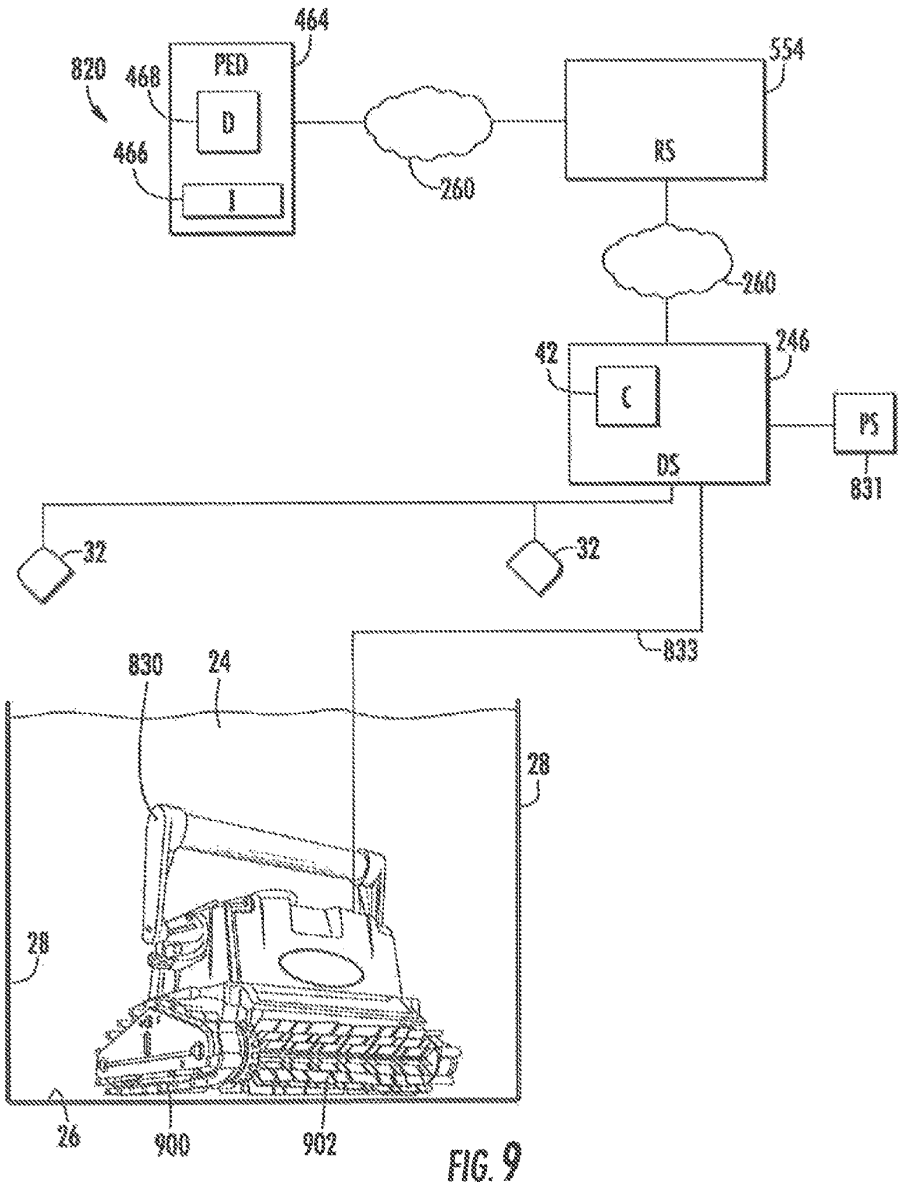
464
820
468
PED
D
466
I
260
554
RS
260
42
C
246
DS
PS
831
32
32
833
830
24
28
28
26
900
902

FIG. 9

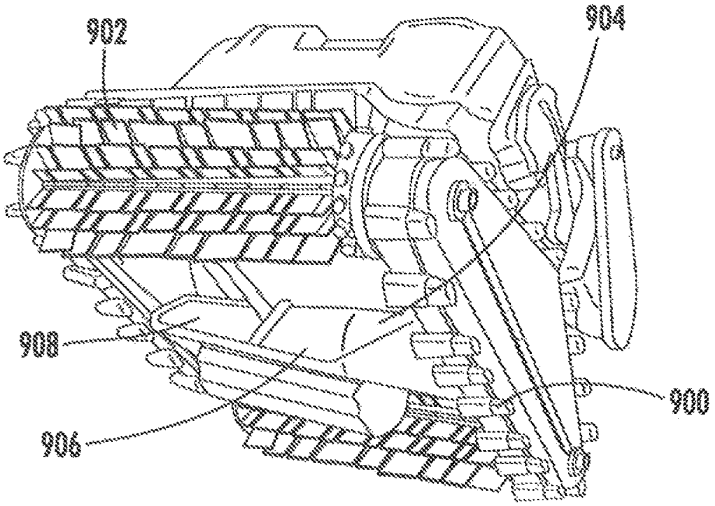

FIG. 10

POOL CLEANING SYSTEM AND METHOD TO AUTOMATICALLY CLEAN SURFACES OF A POOL USING IMAGES FROM A CAMERA

CROSS-REFERENCE TO RELATED APPLICATION

This application is a continuation of U.S. patent application Ser. No. 16/919,750, filed Jul. 2, 2020, which is a continuation of U.S. patent application Ser. No. 16/416,840, filed May 20, 2019 (now U.S. Pat. No. 10,739,785), which is a continuation of U.S. patent application Ser. No. 15/973,983, filed May 8, 2018 (now U.S. Pat. No. 10,338,599), which is a continuation of U.S. patent application Ser. No. 15/207,065, filed Jul. 11, 2016 (now U.S. Pat. No. 9,995,051), which is a continuation of U.S. patent application Ser. No. 13/545,918, filed Jul. 10, 2012 (now U.S. Pat. No. 9,388,595), the contents of all of which are incorporated herein by reference in their entireties.

BACKGROUND

Manually cleaning the floor and sides of a swimming pool may be a tedious and time-consuming task. As a result, automated robotic pool cleaners have been developed. However, controlling and monitoring such automated robotic pool cleaners to insure that all portions of the pool surfaces are satisfactorily cleaned remains a challenge.

SUMMARY OF THE INVENTION

The disadvantages heretofore associated with the prior art are overcome by the present invention of a pool cleaning system for cleaning debris from a submerged surface of a swimming pool comprising: a self-propelled pool cleaner having rotatably-mounted supports for supporting and guiding the cleaner on the pool surface; a filter configured to retain the debris collected from the submerged surface of the swimming pool; an electric motor for enabling the rotation of the rotatably-mounted supports on the pool surface; at least one camera to capture imagery of the pool surface; a controller, in electronic communication with the at least one camera, to determine a cleanliness characteristic of the pool surface on which the cleaner has passed based on the camera imagery and generate a control signal to direct movement of the cleaner based on the cleanliness characteristic of the pool surface; and a portable electronic device is configured to present a graphic on a display, the graphic depicting the submerged surface of the pool and those portions of the surface that remain uncleaned as the cleaner traverses the pool surface.

In one aspect, the at least one camera is carried by the cleaner. In another aspect, the controller is carried by the cleaner. In still another aspect, the electric motor is mechanically connected to at least one of the rotatably-mounted supports.

In yet another aspect, the controller is operable to execute one or more cleaning programs for cleaning the submerged surfaces of the pool. In one aspect, the control signal causes the cleaner to drive in a direction to clean a portion of the pool surface based on the cleanliness characteristic of the pool surface. Alternatively, the control signal causes the cleaner to steer in a direction to clean a portion of the pool surface based on the cleanliness characteristic of the pool surface. In another aspect, the control signal causes the cleaner to drive in a direction to re-clean a portion of the pool surface over which the cleaner has passed. Alternatively, the control signal causes the cleaner to steer in a direction to re-clean a portion of the pool surface over which the cleaner has passed.

In one aspect, the captured imagery from the at least one camera is digitally processed by the controller to determine the cleanliness characteristic of the pool surface. Alternatively, the captured imagery from the at least one camera is digitally processed by a remote processor to determine the cleanliness characteristic of the pool surface.

In another aspect, the system further comprises a dry station located remotely from the cleaner and in communication with the cleaner, wherein the dry station includes the controller. Alternatively, the system further comprises a dry station located remotely from the cleaner and in communication with the cleaner, wherein the controller is located remotely from the cleaner and the dry station. In still another aspect, the controller controls electric power provided to the electric motor.

In one aspect, the control signal causes the cleaner to move in a direction of a portion of the pool surface to be cleaned based solely upon signals received from the camera. In another aspect, the control signal causes the cleaner to drive in a direction to clean a portion of the pool surface based on the cleanliness characteristic of the pool surface. Alternatively, the control signal causes the cleaner to steer in a direction to clean a portion of the pool surface based on the cleanliness characteristic of the pool surface. In yet another aspect, the control signal causes the cleaner to drive in a direction to re-clean a portion of the pool surface over which the cleaner has passed. Alternatively, the control signal causes the cleaner to steer in a direction to re-clean a portion of the pool surface over which the cleaner has passed.

BRIEF DESCRIPTION OF THE DRAWINGS

FIG. **1** is a schematic illustration of an example pool cleaning system.

FIG. **2** is a schematic illustration of an implementation of the pool cleaning system of FIG. **1**.

FIG. **3** is a schematic illustration of an implementation of the pool cleaning system of FIG. **1**.

FIG. **4** is a schematic illustration of an implementation of the pool cleaning system of FIG. **1**.

FIG. **5** is a schematic illustration of an implementation of the pool cleaning system of FIG. **1**.

FIG. **6** is a flow diagram of an example method that may be carried out with the pool cleaning system of FIG. **2-5**.

FIG. **7** is a plan view of an example display with an example graphical depiction.

FIG. **8** is a plan view of another example display with an example graphical depiction.

FIG. **9** is a schematic illustration of an implementation of the pool cleaning system of FIG. **1** with an example pool cleaning vehicle.

FIG. **10** is a bottom perspective view of the example pool cleaning vehicle of the system of FIG. **9**.

DETAILED DESCRIPTION OF THE EXAMPLE EMBODIMENTS

FIG. **1** schematically illustrates an example pool cleaning system **20**. As schematically shown by FIG. **1**, pool cleaning system **20** is adapted to clean submerged surfaces of a pool **22** containing a liquid **24**. In particular, pool cleaning system **20** is adapted to clean at least a bottom or floor surface **26** of the pool **22** and possibly to additionally clean surfaces **28**

of pool **22**. As will be described hereafter, pool cleaning system facilitates the control and monitoring of a robotic pool cleaner to better assure that all portions of pool **22** are satisfactorily cleaned.

Pool cleaning system **20** comprises vehicle **30**, cameras **32** and controller **42**. Vehicle **30** comprises an automated powered device configured to travel adjacent to submerged or water containing surfaces of pool **20** (such as floor **26** and/or side surfaces **28**) while cleaning such surfaces. In one implementation, vehicle **30** may include vacuum or suction devices, a liquid circulation system and a filter to draw debris, such as bacterial growth or plant growth, from such pool surfaces, wherein the drawn liquid containing such residue or foreign matter is filtered to collect the debris. In other implementations, vehicle **30** may not collect such debris, wherein vehicle **30** merely loosens such debris on the pool surfaces such that the loosened or separated debris may be subsequently removed using the existing liquid filtering system of pool **22**.

To assist in the loosening of debris, in one implementation, vehicle **30** may additionally include a chemical dispenser to closely apply pool cleaning chemicals to the pool surfaces as the vehicle **30** traverses such surfaces. In one implementation, vehicle **30** may additionally or alternatively include one or more scrubbing members, such as active (driven) or passive (undriven or idling) brushes, to assist in the removal of residue or foreign matter from such pool surfaces. In yet another implementation, vehicle **30** may additionally or alternatively include liquid jets to assist in the loosening of debris.

To move along the submerged surfaces of pool **22**, vehicle **30** includes one or more propulsion mechanisms. In one implementation, vehicle **30** is propelled along the submerged pool surfaces using wheels, rollers, tracks or other surface contacting members powered by a motor and the like. Such wheels, rollers or tracks may themselves include the scrubbing members used to clean the surfaces. In one implementation vehicle **30** may also alternatively be propelled by means of the vacuum or liquid jets. The vacuum or liquid jets used for such propulsion nozzle facilitate loosening of debris for collection by vehicle **30**. In other implementations, vehicle **30** may include other propulsion mechanisms.

Cameras **32** comprise devices configured to capture video or time lapse images of pool **22**. In the example illustrated, cameras **32** are mounted on structures external to pool **22**. In other words, cameras **32** are not submerged. In other implementations, cameras **32** may alternatively be mounted to vehicle **30**. In the example illustrated, cameras **32** capture movement of vehicle **30** while vehicle **30** is submerged within pool **22**. In other implementations, cameras **32** merely capture images of submerged surfaces **26**, **28** of pool **22**.

In the example illustrated, cameras **32** comprise cameras serving as part of a home or pool security system, wherein such cameras detect the presence of a person at pool **22** satisfying a predefined characteristic and wherein an alert is output upon the person's detected presence. For example, in one implementation, cameras **32** are utilized as part of a security system that detects when a person below a predefined age, such as a child, is present at pool **22** without a detected presence of a recognized adult. In another implementation, cameras **32** may detect the presence of an unauthorized person or intruder at pool **22**. Identification of the person may be achieved by an off-site human or computerized monitoring system, wherein signals from cameras **32** are transmitted across a wide area network or may be achieved with software of controller **42** which includes facial recognition or other identification programming.

Because pool cleaning system **20** utilizes pre-existing cameras **32** provided as part of a security system or shares the use of cameras **32** with such a home or pool security system, pool cleaning system **20** is easier to set up, less complex and less expensive. In other implementations, pool cleaning system **20** may utilize dedicated cameras **22** independent of any cameras associated with a home, facility or pool security system. In such an alternative system, cameras **32** may be more precisely focused upon pool **22** and surfaces **26**, **28** while also including appropriate lenses or modifications to account for glare, refraction and the like to better facilitate the capture of surfaces and vehicle **30** which are submerged.

Controller **42** comprises one or more processing units in communication with vehicle **30** and cameras **32**. For purposes of this application, the term "processing unit" shall mean a presently developed or future developed processing unit that executes sequences of instructions contained in a memory. Execution of the sequences of instructions causes the processing unit to perform steps such as generating control signals. The instructions may be loaded in a random access memory (RAM) for execution by the processing unit from a read only memory (ROM), a mass storage device, or some other persistent storage. In other embodiments, hard wired circuitry may be used in place of or in combination with software instructions to implement the functions described. For example, controller **42** may be embodied as part of one or more application-specific integrated circuits (ASICs). Unless otherwise specifically noted, the controller is not limited to any specific combination of hardware circuitry and software, nor to any particular source for the instructions executed by the processing unit.

In one implementation, controller **42** communicates with vehicle **30** and cameras **32** entirely across a wired connection. In another implementation, controller **42** communicates with vehicle **30** and cameras **32** across a wireless connection, such as cross a local area network (LAN) or a wide area network (WAN) such as the Internet. One of limitation, controller **42** may communicate with vehicle **30** and cameras **32** using a combination of both wired and wireless communication connections.

Controller **42** is configured to generate control signals for steering vehicle **30** based upon signals received from cameras **32**. In one implementation, controller **42** provides the sole steering directions for vehicle **30** using signals from cameras **32**. Because vehicle **30** is precisely steered under the control of controller **42**, rather than traveling in a random manner, entire summer surfaces of pool **22** may be more quickly and efficiently covered and cleaned. Because controller **42** provides the only steering instructions for vehicle **30** and utilizes signals from cameras **32**, complex steering algorithms or codes in either vehicle **30** or controller **42** may be omitted to reduce complexity and cost of system **20**.

In another implementation, vehicle **30** may cover or travel across surfaces of pool **22** in either a random fashion or according to an automated pool coverage algorithm or pool coverage pattern stored in a memory associated with vehicle **30** or controller **42**. In such an implementation, controller **42** utilizes signals from cameras **32** to verify that all of the surfaces of pool **22** have been cleaned, that no spots have been missed. Upon identifying a missed spot, controller **42** utilizes signals from camera **32** to steer vehicle **32** over such missed portions of surfaces **26**, **28**. According to one example, controller **42** not only uses signals from camera **32** to determine whether any portions of surfaces **26**, **28** have

been missed entirely, but to also determine whether any portions of surfaces **26**, **28** have been cleaned, but not to a satisfactory degree or extent. In such circumstances, controller **42** uses signals from cameras **32** to steer vehicle **34** such areas to re-clean such portions until such portions have been satisfactorily cleaned such that the portions have a cleanliness characteristic satisfying a predefined threshold.

FIG. **2** schematically illustrates pool cleaning system **120**, the particular example of pool cleaning system **20** described above. Pool cleaning system **120** is similar to pool cleaning system **20** except that pool cleaning system **120** additionally comprises dry station **46** and display **50**. Those remaining components of pool cleaning system **120** which correspond to components of pool cleaning system **20** are numbered similarly.

Dry station **46** comprises a station in communication with vehicle **30** and cameras **32** outside of pool **22**. Dry station **46** incorporates controller **42**. In one implementation, dry station **46** communicates with vehicle **30** in a wired fashion. In such an implementation, dry station **46** further provides electrical power to vehicle **30** in a wired fashion. Dry station **46** communicates with cameras **32** and either a wired or wireless fashion.

Display **50** comprises a device to present a graphical images and text on a display screen. In one implementation, display **58** may be incorporated as part of dry station **46**. In another implementation, display **50** may be provided on a portable electronic device, a computer, a television and the like. Display **50** is utilized by pool cleaning system **120** to present information regarding the cleaning of pool **22** to facilitate control of vehicle **30** by controller **42**. In one implementation, display **50** is utilized by pool cleaning system **120** and a controller **42** to present a graphical depiction of those portions of surfaces **26**, **28** of pool **22** have not been satisfactorily cleaned so as to satisfy a predefined cleanliness characteristic threshold. Such portions may comprise portions that have been completely missed by vehicle **30** as well as those portions that have been covered by vehicle **30** but have not been satisfactorily cleaned with the given number of passes of vehicle **30** or the existing cleaning settings of vehicle **30**. The graphical depiction presented on display **50** enables a person view the quality of the prior cleaning session and to input commands causing controller **42** to generate control signals using signals from camera **32** to steer vehicle **30** back to such identified portions where such portions may be cleaned at the same or elevated cleaning aggressiveness settings.

Another implementation, display **50** may be further utilized by controller **42** to depict the progress of vehicle **30** in cleaning pool **22**. Such a display **50** allows a person to visually determine how much of the pool has been currently cleaned and to estimate the remaining time before the pool cleaning task is completed. In certain circumstances, using display **50**, a person may adjust a setting of vehicle **30** to accelerate a rate at which surfaces **26**, **20** of pool **22** are cleaned to meet an earlier desired completion time for such pool cleaning.

FIG. **3** schematically illustrates pool cleaning system **220**, another example implementation of pool cleaning system **20**. Pool cleaning system **220** is similar to pool cleaning system **20** except that pool cleaning system **220** additionally comprises dry station **246**, display **50**, and remote server **254**. Those remaining components of pool cleaning system **220** which correspond to components of pool cleaning system **20** or pool cleaning system **120** are numbered similarly.

Dry station **246** is similar to dry station **46**, described above, except that dry station **246** serves as a local interface for communication with controller **42** across a network **260**. In one implementation, network **260** may comprise a local area network. In another implementation, network **260** may comprise a wide area network, such as the Internet. For example, in one implementation, dry station **246** may incorporate a modem. In one implementation, dry station **246** may communicate across a local area network to controller **42**. In another implementation, dry station **246** may communicate through a router, across a local area network, to a local modem which communicates across a network **260**. The example illustrated, dry station **246** further provides part of vehicle **30** across a wired cable or wired connection. Display **50** is described above with respect to system **120**.

Remote server **254** comprises a server remote from dry station **246** which is in communication with dry station **246** across network **260**. Remote server **254** includes controller **42**. During operation, signals from cameras **32** are transmitted across dry station **246** across network **260** to controller **42** of remote server **254**. Based upon such signals from cameras **32**, controller **42** generates control signals which are transmitted back across network **260** and through dry station **246** to vehicle **30** to steer vehicle **30**.

As shown by FIG. **3**, remote server **254** and network **260** may be shared as part of other pool cleaning systems **320**, wherein controller **42** generates control signals for steering the pool cleaning vehicle **30** of system **320** based upon signals from cameras **32** transmitted across dry station **246** of system **320**. In such an implementation, the cost and complexity of pool cleaning system **220** is reduced since controller **42** is remotely provided at remote server **254** which services multiple pool cleaning systems **220**, **320**. Upgrades to controller **42** and its software are also more easily achieved for all pool cleaning systems to **20**, **320** and their pools **22**, **222** being serviced. In one implementation, the supervised cleaning, inspection and possible re-cleaning facilitated by the use of cameras **32** may be provided as part of a subscription to users of vehicle **30**. In such an implementation, a pool **22** having security cameras **32** may be upgraded with appropriate software or an appropriate software module added to dry station **246** to make a network connection with controller **42** which directs the security cameras **32** to capture vehicle **30** utilizes such signals for steering vehicle **30**.

FIG. **4** schematically illustrates pool cleaning system **420**, another particular implementation of pool cleaning system **20**. Pool cleaning system **420** is similar to pool cleaning system **120** except that pool cleaning system **420** additionally comprises a portable electronic device **464**. Those remaining components of pool cleaning system **420** which correspond to components of pool cleaning system **120** are numbered similarly.

Portable electronic device **464** comprises a portable handheld electronic device in communication with controller **42** and/or dry station **46** across network **260**. Examples of such a portable electronic device (PED) **300** include, but are not limited to, a smart phone, a personal data assistant (PDA), laptop, notebook computer, tablet computer (e.g. IPAD) and MP3 player (e.g., IPOD TOUCH). In the example illustrated, PED **464** comprises input **466** and display **468**.

Input **466** serves as a user interface for PED **464** by which inputs are made to PED **464**. Input **466** facilitates entry of inputs or commands by a person to cause controller **42** to generate control signals varying the control of vehicle **30**. In one implementation, input **466** comprise a keyboard in other implementations, input **466** may comprise a touchpad, a

stylus, a microphone with associated speech recognition software or programming, a touch screen, buttons, switches and the like. In some implementations, input **466** may comprise a touch screen incorporated as part of display **468**.

Display **468** comprises a user interface by which graphical or textual data is presented to a user. Display **468** may present the same or similar information as presented at dry station **246** by display **50** as described above. In one implementation, display **468** comprises a liquid crystal display. In other implementations, display **468** may comprise other types of display technology such as a light emitting diode display, an organic light emitting diode display (OLED), an electronic ink (e-ink) display or other types of display technology in present use or developed in the future. Although system **420** is illustrated as including controller **422** is part of dry station **46**, in some implementations, controller **42** may alternatively be located as part of PED **464**.

PED **464** enables a person located remote from pool **22** to monitor the progress of the cleaning of pool **22** by vehicle **30** of system **420**. PED **464** provides a person with a graphical presentation (described above with respect to display **50**) indicating those portions of surfaces **26**, **28** of pool **22** that have been completed as well as those portions **26**, **20** and that remain to be cleaned. The person may also be provided with a graphical indication of what portions need to be re-cleaned to meet predetermined cleanliness thresholds. In the example illustrated, input **466** enables a person to enter commands or selections which are transmitted across network **260** to controller **42** to adjust operation of vehicle **30**. For example, the path or route of vehicle **30** may be changed, the aggressiveness of the cleaning chemicals or mechanical cleaning devices may be adjusted, the speed at which vehicle **30** traverses surfaces **26**, **28** may be adjusted. In response to such adjustment signals from PED **464**, controller **42** may utilize signals from cameras **32** to adjust the steering of vehicle **30**.

FIG. **5** schematically illustrates pool cleaning system **520**, another example implementation of pool cleaning system **20**. Pool cleaning system **520** is similar to pool cleaning system **420** except that pool cleaning system **520** additionally comprises a remote server **554**. Those remaining components of pool cleaning system **520** which correspond to components of pool cleaning system **420** are numbered similarly.

Remote server **554** is similar to remote server **254** described above with respect to system **220**. Remote server **554** comprises a server remote from dry station **246** which is in communication with dry station **246** across network **260**. Remote server **254** includes controller **42**. During operation, signals from cameras **32** are transmitted across dry station **246** across network **260** to controller **42** of remote server **254**. Based upon such signals from cameras **32**, controller **42** generates control signals which are transmitted back across network **260** and through dry station **246** to vehicle **30** to steer vehicle **30**. Controller **42** further relays either the raw signals from camera **32** or image signals generated based upon signals from cameras **32** to PED **464**, wherein such images (described above) are presented on display **468**. As noted above, PED may further receive commands through input **466**, wherein such commands are transmitted to controller **42** which generates control signals that are ultimately transmitted to vehicle **30** for steering vehicle **30**.

As with remote server **254**, remote server **554** and network **260** may be shared as part of other pool cleaning systems **320** (shown in FIG. **3**), wherein controller **42** generates control signals for steering the pool cleaning vehicle **30** of system **320** based upon signals from cameras **32** transmitted across dry station **246** of system **320**. In such implementations, controller **42** of remote server **554** may interact with other PEDs **464**. In such an implementation, the cost and complexity of pool cleaning system **220** is reduced since controller **42** is remotely provided at remote server **254** which services multiple pool cleaning systems **220**, **320**. Upgrades to controller **42** and its software are also more easily achieved for all pool cleaning systems to **20**, **320** and their pools **22**, **222** being serviced. In one implementation, the supervised cleaning, inspection and possible re-cleaning facilitated by the use of cameras **32** may be provided as part of a subscription to users of vehicle **30**. In such an implementation, a pool **22** having security cameras **32** may be upgraded with appropriate software or an appropriate software module added to dry station **246** to make a network connection with controller **42** which directs the security cameras **32** to capture vehicle **30** utilizes such signals for steering vehicle **30**. As indicated by broken lines, in other implementations, the controller **42** for generating control signals steering vehicle **30** based upon signals from cameras **32** may alternatively be relocated in PED **464**.

FIG. **6** is a flow diagram illustrating an example method **600** that may be carried out by any of systems **120-520**. As indicated by step **602**, cameras **32** capture images of pool cleaning by vehicle **30**. As indicated by step **604**, controller **42** obtain such signals from cameras **32** for the surfaces of pool **22** that have been cleaned. As indicated by step **606**, controller **42** uses information gathered from the signals from cameras **32** to identify those portions of surfaces **26**, **28** not satisfactorily cleaned—not satisfying a predefined cleanliness characteristic or measurement threshold. One example of a cleanliness characteristic measurement a threshold may be how well the color of a surface matches a predetermined desirable color for the pool surface (such as original color of the tile or surface). A surface that has been missed entirely by vehicle **30** during a pool cleaning session may be automatically deemed to not satisfy a predetermined cleanliness characteristic.

As indicated by step **608**, based upon such determinations, controller **42** generates control signals resulting in the presentation of a graphical depiction of those portions of pool **22** that has not been satisfactorily cleaned. Such graphical representations or depictions may be presented on display **50** or display **468**. FIGS. **7** and **8** illustrate examples of graphical depictions that may be presented.

FIG. **7** illustrates display **468** presenting graphical depiction **620**. Graphical depiction **620** comprises a first graphic **622** having a first portion **624** representing sides or walls **28** of pool **22** and a second portion **626** representing the floor **26** of pool **22**. Graphical depiction **620** further comprises a moving icon **628** representing the current positioning of vehicle **30**. In one implementation, the path of vehicle **30** may additionally be depicted by icon **628** shown in broken lines. As shown by FIG. **7**, those portions **632** of surfaces **26**, **28** of pool **22** (shown in FIG. **1**) over which of vehicle **30** has moved are identified by graphical depiction **620** either by color, markings or other various distinctive attributes. Likewise, those portions **634** of surfaces **26**, **28** of pool **22** that have not been covered by vehicle **30** are identified by a distinct color col marking or distinctive attribute of depiction **620**. As a result, a person may view the current position of vehicle **30**, the extent to which pool **22** has been cleaned or covered by vehicle **30** and the extent of pool **22** that remains to be cleaned. In the example illustrated, depiction **620** further identifies those portions **638** of surfaces **26**, **28**

that have been cleaned, but which have not been cleaned to a satisfactory degree or extent. In one implementation, portions **638** may be identified by colors, brightness, markings or other visually distinctive attributes that are visually distinct from both portions **632** and portions **634**. In other implementations, portions **638** may have the same characteristic of portions **634** in yet other implementations, different portions **638** may have different visual attributes depending upon a degree to which such clean portions have failed to satisfy the predefined cleanliness characteristic threshold. In some implementations, different port **638** may have different visual attributes depending upon different cleaning strategies that may be recommended for the different portions **638**. For example, controller **42** may determine and recommend a first cleaning strategy (a first chemical solution jetted at a first rate and scrubbed at a first rate) with respect to a first portion **638** and may recommend a second different cleaning strategy (a second chemical solution jetted at a second rate is about a second rate) with respect to a second portion **638**, wherein the different cleaning strategies are represented by different visual attributes presented in depiction **620**.

FIG. **8** illustrates display **468** presenting a graphical depiction **720**. Graphical depiction **720** comprises a first graphic **622** having a first portion **624** representing sides or walls **28** of pool **22** and a second portion **626** representing the floor **26** of pool **22** (shown in FIG. **1**). Graphical depiction **720** is similar to graphical depiction **620** except that graphical depiction **720** omits icon **628** presenting vehicle **30**. Like depiction **620**, depiction **720** graphically depicts those portions **632** of surfaces **26**, **28** over which vehicle **30** has traveled while in a cleaning mode. Depiction **720** also visually depicts those portions **634** that have not been covered by vehicle **30** in the cleaning mode and those portions **638** over which vehicle **30** has traveled while in the cleaning mode, but which have not been cleaned to a satisfactory degree. As illustrated in FIG. **8**, different portions **638** may be visibly distinguished from one another through color, text or markings indicating either differences in the cleanliness of such portions **638** or indicating different recommended cleaning strategies or approaches that may be selected by a person using input **466** when vehicle **30** is steered back to such portions **638** for re-cleaning using signals from camera **32**.

As indicated by step **610** of FIG. **6**, controller **42** generates control signals steering vehicle **30** to re-clean portions of pool **22**, such as portions **638**. Such steering may be facilitated by using signals from cameras **32**. As noted above, in some implementations, a person may be allowed choose a cleaning approach for a particular portion **638** using input **466**. The selection may be facilitated by visual inspection of the different visual attributes for the particular portion **638** provided by depiction **720** (or depiction **620**). In some implementations, input **466** may additionally be utilized by a person to prioritize an order in which portions **638** are re-cleaned.

FIG. **9** illustrates pool cleaning system **820**, an example implementation of pool cleaning system **20**. Pool cleaning system **820** is similar to pool cleaning system **520** except the pool cleaning system **820** located controller **42** in dry station **246** and includes pool cleaning vehicle **830**, a specific example of vehicle **30**. As shown by FIG. **9**, in addition to transmitting control signals generated by controller **42** to vehicle **830**, dry station **246** further transmits power from power source **831** through a power line or power cable **833** to vehicle **830**. In the example illustrated, data communication and communication of control signals, also occurs across wired connections within or alongside the same line **833** in the example illustrated, remote server **554** serves as a communication link by which upgrades to controller **42** may be implemented across a wide number of pool cleaning systems and by which information from controller **42** is conveyed to one or more portable electronic devices **464** across network **260**.

Vehicle **830** comprises a robotic or automated pool cleaning device vehicle **830** comprises a self-contained onboard filtration system with drive and pump motors. Vehicle **830** utilizes an internal microprocessor guided drive motor to systematically clean surfaces of pool **22**. As shown by FIGS. **9** and **10**, vehicle **830** utilizes a toothed track drive **900** provide traction and propulsion for vehicle **30**. Vehicle **830** comprises rotating brushes **902** to loosen waterline buildup and breakdown large debris while power washing jets **904** flush out dirt from pores, seems in corners where brushes **902** may not be able to reach. The loosened dirt and debris is vacuumed through off-center vacuum ports **906** which passes the vacuumed debris through internally house filter bag. In the example illustrated, vehicle **830** further comprises rollers **908** which inhibit vehicle **830** from becoming impeded or stuck on raised drains or pop-up heads. Although illustrated as being employed with system **820**, vehicle **830** may also be utilized with any of systems **20**, **120**, **220**, **320** and **420**. In other implementations, other robotic or automated pool cleaning vehicles may be utilized.

Although the present disclosure has been described with reference to example embodiments, workers skilled in the art will recognize that changes may be made in form and detail without departing from the spirit and scope of the claimed subject matter. For example, although different example embodiments may have been described as including one or more features providing one or more benefits, it is contemplated that the described features may be interchanged with one another or alternatively be combined with one another in the described example embodiments or in other alternative embodiments. Because the technology of the present disclosure is relatively complex, not all changes in the technology are foreseeable. The present disclosure described with reference to the example embodiments and set forth in the following claims is manifestly intended to be as broad as possible. For example, unless specifically otherwise noted, the claims reciting a single particular element also encompass a plurality of such particular elements.

What is claimed is:

1. A self-propelled pool cleaner for cleaning debris from a submerged surface of a swimming pool, comprising:

a. a vehicle body;

b. means for moving the vehicle body within the swimming pool;

c. a filter configured to retain debris collected from the submerged surface;

d. at least one camera mounted directly or indirectly to the body for capturing an image of at least a first portion of the submerged surface; and

e. a controller (i) positioned on or in the body, (ii) in electronic communication with the at least one camera, and (iii) configured to generate, in response to the captured image, at least one control signal to cause movement of the body within the swimming pool to, or away from, the first portion of the submerged surface.

2. A self-propelled pool cleaner for cleaning debris from a submerged surface of a swimming pool, comprising:

a. a vehicle body;

b. means for moving the vehicle body within the swimming pool;

c. a filter configured to retain debris collected from the submerged surface;

d. at least one camera carried by the body for capturing an image of at least a first portion of the submerged surface; and

e. a controller (i) positioned on or in the body, (ii) in electronic communication with the at least one camera, and (iii) configured to generate, in response to the captured image, at least one control signal to cause movement of the body within the swimming pool to, or away from, the first portion of the submerged surface.

3. A self-propelled pool cleaner for cleaning debris from a submerged surface of a swimming pool, comprising:

a. a vehicle body;

b. means for moving the vehicle body within the swimming pool;

c. a filter configured to retain debris collected from the submerged surface;

d. at least one camera positioned on or in, or carried by, the body for capturing an image of at least a first portion of the submerged surface; and

e. a controller (i) positioned on or in the body, (ii) in electronic communication with the at least one camera and a portable electronic device, and (iii) configured to generate, in response to at least one of the captured image or information from the portable electronic device, at least one control signal to cause movement of the body within the swimming pool to, or away from, the first portion of the submerged surface.

4. A self-propelled pool cleaner for cleaning debris from a submerged surface of a swimming pool, comprising:

a. a vehicle body;

b. means for moving the vehicle body within the swimming pool;

c. a filter configured to retain debris collected from the submerged surface;

d. at least one camera for capturing an image of at least a first portion of the submerged surface; and

e. a controller (i) positioned on or in the body, (ii) in electronic communication with the at least one camera, and (iii) configured to generate, in response to the captured image, at least one control signal to cause movement of the body within the swimming pool to, or away from, the first portion of the submerged surface.

5. A self-propelled pool cleaner for cleaning debris from a submerged surface of a swimming pool, comprising:

a. a vehicle body;

b. means for moving the vehicle body within the swimming pool;

c. a filter configured to retain debris collected from the submerged surface;

d. a chemical dispenser on, in, or carried by the vehicle body;

e. at least one camera on, in, or carried by the vehicle body, for capturing an image of at least a first portion of the submerged surface; and

f. a controller (i) on, in, or carried by the vehicle body, (ii) in electronic communication with the at least one camera and (iii) configured to generate, in response to the captured image, at least one control signal to cause movement of the body within the swimming pool to, or away from, the first portion of the submerged surface.

* * * * *

EXHIBIT C

US011003191B2

(12) **United States Patent**
Durvasula et al.

(10) **Patent No.: US 11,003,191 B2**
(45) **Date of Patent: *May 11, 2021**

(54) **POOL CLEANING SYSTEM AND METHOD TO AUTOMATICALLY CLEAN SURFACES OF A POOL USING IMAGES FROM A CAMERA**

(71) Applicant: **ZODIAC POOL SYSTEMS LLC**, Carlsbad, CA (US)

(72) Inventors: **Kameshwar Durvasula**, Garfield, NJ (US); **William Londono Correa**, Bloomfield, NJ (US)

(73) Assignee: **ZODIAC POOL SYSTEMS LLC**, Carlsbad, CA (US)

(*) Notice: Subject to any disclaimer, the term of this patent is extended or adjusted under 35 U.S.C. 154(b) by 0 days.

This patent is subject to a terminal disclaimer.

(21) Appl. No.: **16/919,750**

(22) Filed: **Jul. 2, 2020**

(65) **Prior Publication Data**

US 2020/0333797 A1 Oct. 22, 2020

Related U.S. Application Data

(63) Continuation of application No. 16/416,840, filed on May 20, 2019, now Pat. No. 10,739,785, which is a (Continued)

(51) **Int. Cl.**
G05D 1/02 (2020.01)
H04N 7/18 (2006.01)
(Continued)

(52) **U.S. Cl.**
CPC ..... ***G05D 1/0246*** (2013.01); ***E04H 4/1654*** (2013.01); ***G05D 1/0016*** (2013.01); (Continued)

(58) **Field of Classification Search**
CPC .. G05D 1/0246; G05D 1/0016; G05D 1/0033; G05D 1/0038; G05D 2201/0203; (Continued)

(56) **References Cited**

U.S. PATENT DOCUMENTS

5,205,174 A 4/1993 Silverman et al.
5,435,031 A 7/1995 Minami et al.
(Continued)

FOREIGN PATENT DOCUMENTS

CN 101139007 3/2008
EP 0687964 12/1995
(Continued)

OTHER PUBLICATIONS

U.S. Appl. No. 13/545,918, Corrected Notice of Allowability dated Jun. 8, 2016, 2 pages.
(Continued)

Primary Examiner — Allen C Wong
(74) *Attorney, Agent, or Firm* — Kilpatrick Townsend & Stockton LLP; Dean W. Russell

(57) **ABSTRACT**

A pool cleaning system for cleaning debris from a submerged surface of a swimming pool includes a self-propelled pool cleaner having rotatably-mounted supports for supporting and guiding the cleaner on the pool surface; an electric motor for enabling the rotation of the rotatably-mounted supports on the pool surface; at least one camera to capture imagery of the pool surface; a controller, in electronic communication with the at least one camera, to determine a cleanliness characteristic of the pool surface on which the cleaner has passed based on the camera imagery and generate a control signal to direct movement of the cleaner based on the cleanliness characteristic of the pool surface, and a portable electronic device configured to present a graphic on a display, the graphic depicting the (Continued)

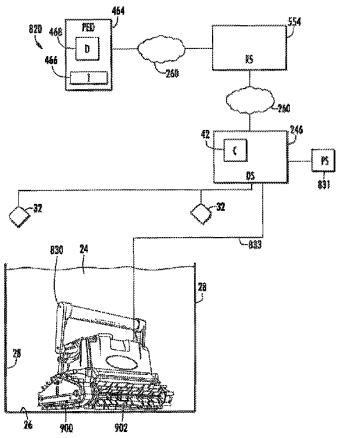

submerged surface of the pool and those portions of the surface that remain uncleaned as the cleaner traverses the pool surface.

3 Claims, 4 Drawing Sheets

Related U.S. Application Data

continuation of application No. 15/973,983, filed on May 8, 2018, now Pat. No. 10,338,599, which is a continuation of application No. 15/207,065, filed on Jul. 11, 2016, now Pat. No. 9,995,051, which is a continuation of application No. 13/545,918, filed on Jul. 10, 2012, now Pat. No. 9,388,595.

(51) **Int. Cl.**

H04N 5/232	(2006.01)
E04H 4/16	(2006.01)
G05D 1/00	(2006.01)
H04N 5/225	(2006.01)
G06T 7/90	(2017.01)
G06T 7/00	(2017.01)

(52) **U.S. Cl.**
CPC ***G05D 1/0033*** (2013.01); ***G05D 1/0038*** (2013.01); ***H04N 5/23203*** (2013.01); ***H04N 7/18*** (2013.01); *G05D 2201/0203* (2013.01); *G06T 7/001* (2013.01); *G06T 7/90* (2017.01); *G06T 2207/10024* (2013.01); *H04N 2005/2255* (2013.01)

(58) **Field of Classification Search**
CPC H04N 7/18; H04N 5/23203; H04N 2005/2255; E04H 4/1654; G06T 7/001; G06T 7/90; G06T 2207/10024
USPC 348/114
See application file for complete search history.

(56) **References Cited**

U.S. PATENT DOCUMENTS

5,507,058	A	4/1996	Minami et al.	
5,613,261	A	3/1997	Kawakami et al.	
5,886,630	A	3/1999	Menoud	
7,123,746	B2	10/2006	Meniere et al.	
7,362,351	B2 *	4/2008	Meniere	G01V 8/10 348/135
7,398,138	B2	7/2008	Emery et al.	
7,993,600	B2	8/2011	Doyle et al.	
8,007,653	B2	8/2011	Porat	
8,043,070	B2	10/2011	Stiles, Jr. et al.	
9,388,595	B2	7/2016	Durvasula et al.	
9,995,051	B2	6/2018	Durvasula et al.	
10,338,599	B2	7/2019	Durvasula et al.	
10,739,785	B2	8/2020	Durvasula et al.	
2002/0097322	A1	7/2002	Monroe et al.	
2004/0025268	A1	2/2004	Porat et al.	
2004/0040581	A1	3/2004	Bruwer	
2007/0094817	A1	5/2007	Stoltz et al.	
2010/0299016	A1	11/2010	Benzler et al.	
2011/0049023	A1 *	3/2011	Hui	E04H 4/1654 210/91
2011/0091329	A1	4/2011	Stiles, Jr. et al.	
2011/0290707	A1 *	12/2011	Porat	C02F 1/4674 210/96.1
2011/0301752	A1	12/2011	Finezilber	
2013/0151061	A1	6/2013	Hong et al.	
2013/0152970	A1	6/2013	Porat	
2013/0269097	A1	10/2013	Alammari	
2014/0009748	A1	1/2014	Leonessa et al.	

FOREIGN PATENT DOCUMENTS

EP	0811432	12/1997	
JP	6162905	3/1986	
WO	2004019295	3/2004	
WO	2009031361	3/2009	
WO	2012023676	2/2012	
WO	WO 2012023676 A1 *	2/2012	E04H 4/16

OTHER PUBLICATIONS

U.S. Appl. No. 13/545,918, Non-Final Office Action dated Jun. 26, 2015, 17 pages.
U.S. Appl. No. 13/545,918 Notice of Allowability dated Mar. 9, 2016, 8 pages.
U.S. Appl. No. 13/545,918, Notice of Allowance dated Dec. 31, 2015, 8 pages.
U.S. Appl. No. 15/207,065, Non-Final Office Action dated Nov. 6, 2017, 10 pages.
U.S. Appl. No. 15/207,065, Notice of Allowance dated Feb. 23, 2018, 9 pages.
U.S. Appl. No. 15/973,983, Non-Final Office Action dated Nov. 6, 2018, 7 pages.
U.S. Appl. No. 15/973,983, Notice of Allowance dated Mar. 4, 2019, 9 pages.
U.S. Appl. No. 16/416,840, Non-Final Office Action dated Feb. 28, 2020, 7 pages.
U.S. Appl. No. 16/416,840, Non-Final Office Action dated Jan. 15, 2020, 9 pages.
U.S. Appl. No. 16/416,840, Notice of Allowability dated Jun. 30, 2020, 2 pages.
U.S. Appl. No. 16/416,840, Notice of Allowance dated Apr. 29, 2020, 9 pages.
Spanish Application No. ES2527883, Response to Substantive Examination dated May 5, 2016.
Spanish Application No. P201331047, Search Report dated Feb. 3, 2015, 1 page.

* cited by examiner

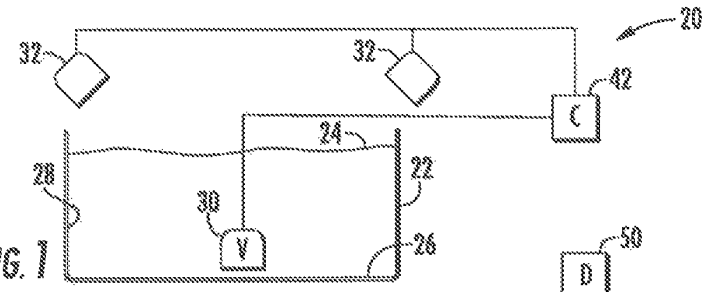

FIG. 1

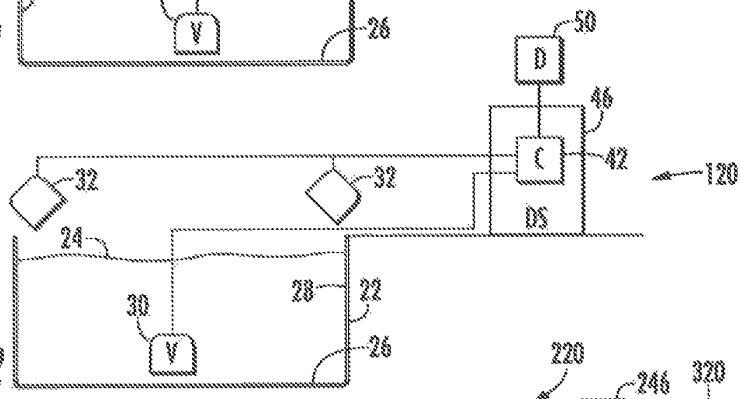

FIG. 2

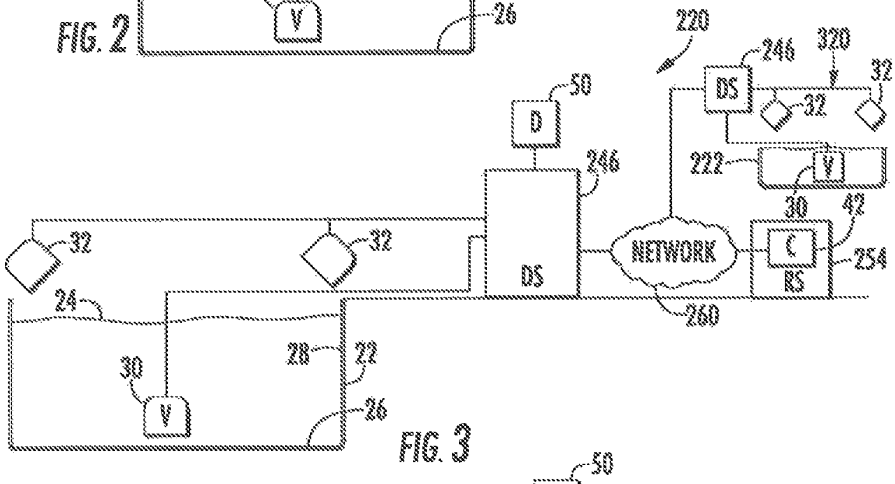

FIG. 3

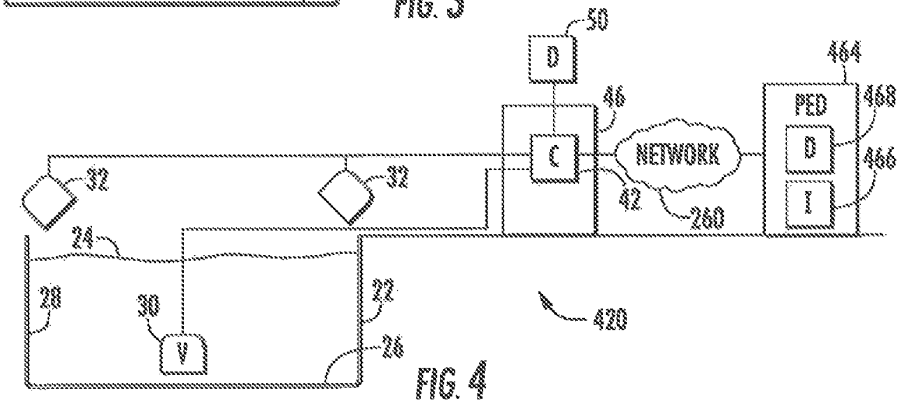

FIG. 4

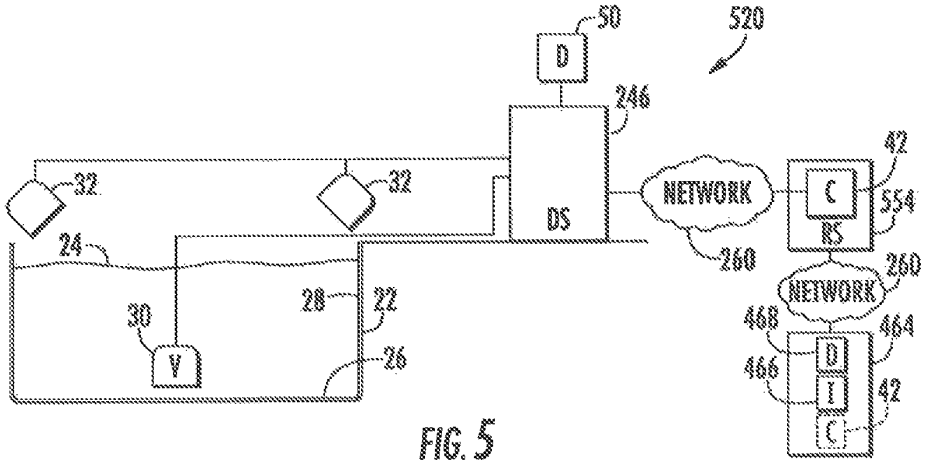

FIG. 5

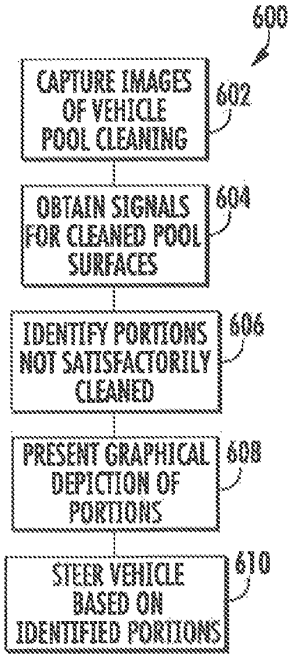

FIG. 6

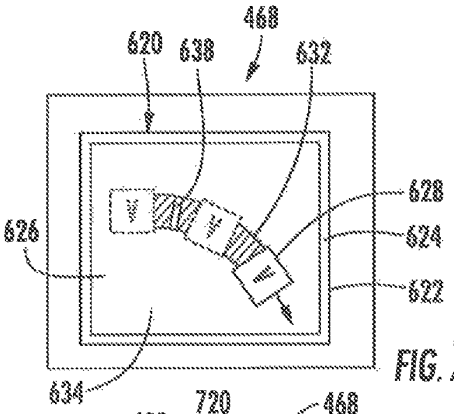

FIG. 7

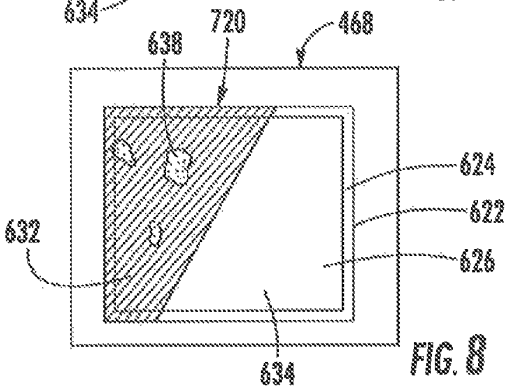

FIG. 8

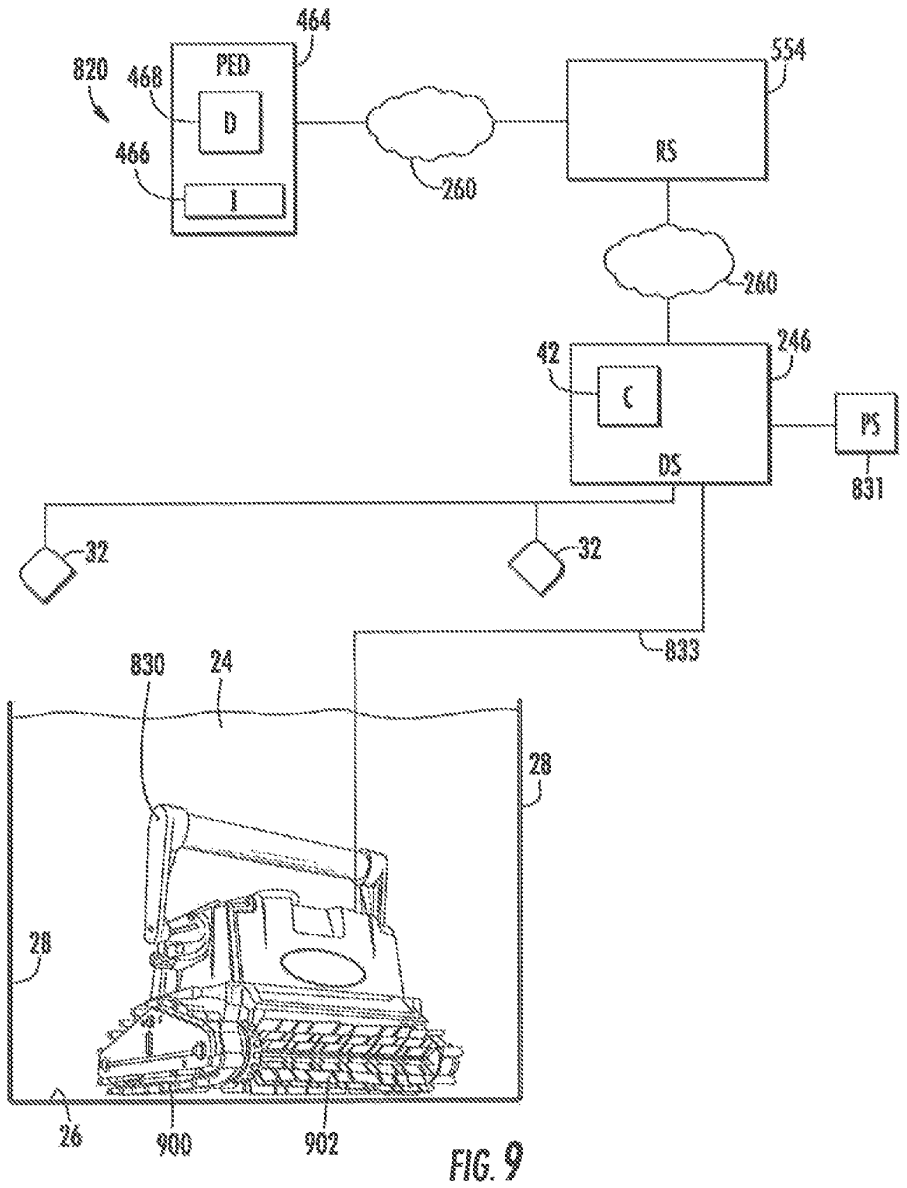
464
820
468
PED
D
466
I
260
554
RS
260
42
C
246
DS
PS
831
32
32
833
830
24
28
28
26
900
902

FIG. 9

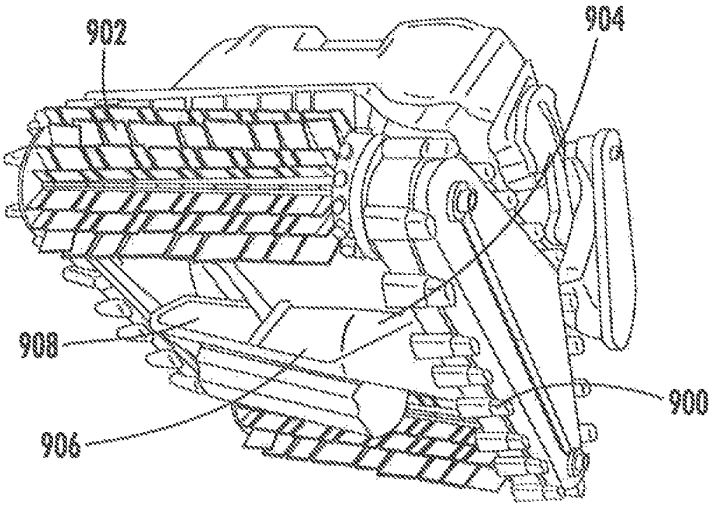

FIG. 10

POOL CLEANING SYSTEM AND METHOD TO AUTOMATICALLY CLEAN SURFACES OF A POOL USING IMAGES FROM A CAMERA

CROSS-REFERENCE TO RELATED APPLICATION

This application is a continuation of U.S. patent application Ser. No. 16/416,840, filed May 20, 2019 (now allowed), which is a continuation of U.S. patent application Ser. No. 15/973,983, filed May 8, 2018 (now U.S. Pat. No. 10,338,599), which is a continuation of U.S. patent application Ser. No. 15/207,065, filed Jul. 11, 2016 (now U.S. Pat. No. 9,995,051), which is a continuation of U.S. patent application Ser. No. 13/545,918, filed Jul. 10, 2012 (now U.S. Pat. No. 9,388,595), the contents of all of which are incorporated herein by reference in their entireties.

BACKGROUND

Manually cleaning the floor and sides of a swimming pool may be a tedious and time-consuming task. As a result, automated robotic pool cleaners have been developed. However, controlling and monitoring such automated robotic pool cleaners to insure that all portions of the pool surfaces are satisfactorily cleaned remains a challenge.

SUMMARY OF THE INVENTION

The disadvantages heretofore associated with the prior art are overcome by the present invention of a pool cleaning system for cleaning debris from a submerged surface of a swimming pool comprising: a self-propelled pool cleaner having rotatably-mounted supports for supporting and guiding the cleaner on the pool surface; a filter configured to retain the debris collected from the submerged surface of the swimming pool; an electric motor for enabling the rotation of the rotatably-mounted supports on the pool surface; at least one camera to capture imagery of the pool surface; a controller, in electronic communication with the at least one camera, to determine a cleanliness characteristic of the pool surface on which the cleaner has passed based on the camera imagery and generate a control signal to direct movement of the cleaner based on the cleanliness characteristic of the pool surface; and a portable electronic device is configured to present a graphic on a display, the graphic depicting the submerged surface of the pool and those portions of the surface that remain uncleaned as the cleaner traverses the pool surface.

In one aspect, the at least one camera is carried by the cleaner. In another aspect, the controller is carried by the cleaner. In still another aspect, the electric motor is mechanically connected to at least one of the rotatably-mounted supports.

In yet another aspect, the controller is operable to execute one or more cleaning programs for cleaning the submerged surfaces of the pool. In one aspect, the control signal causes the cleaner to drive in a direction to clean a portion of the pool surface based on the cleanliness characteristic of the pool surface. Alternatively, the control signal causes the cleaner to steer in a direction to clean a portion of the pool surface based on the cleanliness characteristic of the pool surface. In another aspect, the control signal causes the cleaner to drive in a direction to re-clean a portion of the pool surface over which the cleaner has passed. Alternatively, the control signal causes the cleaner to steer in a direction to re-clean a portion of the pool surface over which the cleaner has passed.

In one aspect, the captured imagery from the at least one camera is digitally processed by the controller to determine the cleanliness characteristic of the pool surface. Alternatively, the captured imagery from the at least one camera is digitally processed by a remote processor to determine the cleanliness characteristic of the pool surface.

In another aspect, the system further comprises a dry station located remotely from the cleaner and in communication with the cleaner, wherein the dry station includes the controller. Alternatively, the system further comprises a dry station located remotely from the cleaner and in communication with the cleaner, wherein the controller is located remotely from the cleaner and the dry station. In still another aspect, the controller controls electric power provided to the electric motor.

In one aspect, the control signal causes the cleaner to move in a direction of a portion of the pool surface to be cleaned based solely upon signals received from the camera. In another aspect, the control signal causes the cleaner to drive in a direction to clean a portion of the pool surface based on the cleanliness characteristic of the pool surface. Alternatively, the control signal causes the cleaner to steer in a direction to clean a portion of the pool surface based on the cleanliness characteristic of the pool surface. In yet another aspect, the control signal causes the cleaner to drive in a direction to re-clean a portion of the pool surface over which the cleaner has passed. Alternatively, the control signal causes the cleaner to steer in a direction to re-clean a portion of the pool surface over which the cleaner has passed.

BRIEF DESCRIPTION OF THE DRAWINGS

FIG. **1** is a schematic illustration of an example pool cleaning system.

FIG. **2** is a schematic illustration of an implementation of the pool cleaning system of FIG. **1**.

FIG. **3** is a schematic illustration of an implementation of the pool cleaning system of FIG. **1**.

FIG. **4** is a schematic illustration of an implementation of the pool cleaning system of FIG. **1**.

FIG. **5** is a schematic illustration of an implementation of the pool cleaning system of FIG. **1**.

FIG. **6** is a flow diagram of an example method that may be carried out with the pool cleaning system of FIG. **2**-**5**.

FIG. **7** is a plan view of an example display with an example graphical depiction.

FIG. **8** is a plan view of another example display with an example graphical depiction.

FIG. **9** is a schematic illustration of an implementation of the pool cleaning system of FIG. **1** with an example pool cleaning vehicle.

FIG. **10** is a bottom perspective view of the example pool cleaning vehicle of the system of FIG. **9**.

DETAILED DESCRIPTION OF THE EXAMPLE EMBODIMENTS

FIG. **1** schematically illustrates an example pool cleaning system **20**. As schematically shown by FIG. **1**, pool cleaning system **20** is adapted to clean submerged surfaces of a pool **22** containing a liquid **24**. In particular, pool cleaning system **20** is adapted to clean at least a bottom or floor surface **26** of the pool **22** and possibly to additionally clean surfaces **28** of pool **22**. As will be described hereafter, pool cleaning

system facilitates the control and monitoring of a robotic pool cleaner to better assure that all portions of pool **22** are satisfactorily cleaned.

Pool cleaning system **20** comprises vehicle **30**, cameras **32** and controller **42**. Vehicle **30** comprises an automated powered device configured to travel adjacent to submerged or water containing surfaces of pool **20** (such as floor **26** and/or side surfaces **28**) while cleaning such surfaces. In one implementation, vehicle **30** may include vacuum or suction devices, a liquid circulation system and a filter to draw debris, such as bacterial growth or plant growth, from such pool surfaces, wherein the drawn liquid containing such residue or foreign matter is filtered to collect the debris. In other implementations, vehicle **30** may not collect such debris, wherein vehicle **30** merely loosens such debris on the pool surfaces such that the loosened or separated debris may be subsequently removed using the existing liquid filtering system of pool **22**.

To assist in the loosening of debris, in one implementation, vehicle **30** may additionally include a chemical dispenser to closely apply pool cleaning chemicals to the pool surfaces as the vehicle **30** traverses such surfaces. In one implementation, vehicle **30** may additionally or alternatively include one or more scrubbing members, such as active (driven) or passive (undriven or idling) brushes, to assist in the removal of residue or foreign matter from such pool surfaces. In yet another implementation, vehicle **30** may additionally or alternatively include liquid jets to assist in the loosening of debris.

To move along the submerged surfaces of pool **22**, vehicle **30** includes one or more propulsion mechanisms. In one implementation, vehicle **30** is propelled along the submerged pool surfaces using wheels, rollers, tracks or other surface contacting members powered by a motor and the like. Such wheels, rollers or tracks may themselves include the scrubbing members used to clean the surfaces. In one implementation vehicle **30** may also alternatively be propelled by means of the vacuum or liquid jets. The vacuum or liquid jets used for such propulsion nozzle facilitate loosening of debris for collection by vehicle **30**. In other implementations, vehicle **30** may include other propulsion mechanisms.

Cameras **32** comprise devices configured to capture video or time lapse images of pool **22**. In the example illustrated, cameras **32** are mounted on structures external to pool **22**. In other words, cameras **32** are not submerged. In other implementations, cameras **32** may alternatively be mounted to vehicle **30**. In the example illustrated, cameras **32** capture movement of vehicle **30** while vehicle **30** is submerged within pool **22**. In other implementations, cameras **32** merely capture images of submerged surfaces **26**, **28** of pool **22**.

In the example illustrated, cameras **32** comprise cameras serving as part of a home or pool security system, wherein such cameras detect the presence of a person at pool **22** satisfying a predefined characteristic and wherein an alert is output upon the person's detected presence. For example, in one implementation, cameras **32** are utilized as part of a security system that detects when a person below a predefined age, such as a child, is present at pool **22** without a detected presence of a recognized adult. In another implementation, cameras **32** may detect the presence of an unauthorized person or intruder at pool **22**. Identification of the person may be achieved by an off-site human or computerized monitoring system, wherein signals from cameras **32** are transmitted across a wide area network or may be achieved with software of controller **42** which includes facial recognition or other identification programming.

Because pool cleaning system **20** utilizes pre-existing cameras **32** provided as part of a security system or shares the use of cameras **32** with such a home or pool security system, pool cleaning system **20** is easier to set up, less complex and less expensive. In other implementations, pool cleaning system **20** may utilize dedicated cameras **22** independent of any cameras associated with a home, facility or pool security system. In such an alternative system, cameras **32** may be more precisely focused upon pool **22** and surfaces **26**, **28** while also including appropriate lenses or modifications to account for glare, refraction and the like to better facilitate the capture of surfaces and vehicle **30** which are submerged.

Controller **42** comprises one or more processing units in communication with vehicle **30** and cameras **32**. For purposes of this application, the term "processing unit" shall mean a presently developed or future developed processing unit that executes sequences of instructions contained in a memory. Execution of the sequences of instructions causes the processing unit to perform steps such as generating control signals. The instructions may be loaded in a random access memory (RAM) for execution by the processing unit from a read only memory (ROM), a mass storage device, or some other persistent storage. In other embodiments, hard wired circuitry may be used in place of or in combination with software instructions to implement the functions described. For example, controller **42** may be embodied as part of one or more application-specific integrated circuits (ASICs). Unless otherwise specifically noted, the controller is not limited to any specific combination of hardware circuitry and software, nor to any particular source for the instructions executed by the processing unit.

In one implementation, controller **42** communicates with vehicle **30** and cameras **32** entirely across a wired connection. In another implementation, controller **42** communicates with vehicle **30** and cameras **32** across a wireless connection, such as cross a local area network (LAN) or a wide area network (WAN) such as the Internet. One of limitation, controller **42** may communicate with vehicle **30** and cameras **32** using a combination of both wired and wireless communication connections.

Controller **42** is configured to generate control signals for steering vehicle **30** based upon signals received from cameras **32**. In one implementation, controller **42** provides the sole steering directions for vehicle **30** using signals from cameras **32**. Because vehicle **30** is precisely steered under the control of controller **42**, rather than traveling in a random manner, entire summer surfaces of pool **22** may be more quickly and efficiently covered and cleaned. Because controller **42** provides the only steering instructions for vehicle **30** and utilizes signals from cameras **32**, complex steering algorithms or codes in either vehicle **30** or controller **42** may be omitted to reduce complexity and cost of system **20**.

In another implementation, vehicle **30** may cover or travel across surfaces of pool **22** in either a random fashion or according to an automated pool coverage algorithm or pool coverage pattern stored in a memory associated with vehicle **30** or controller **42**. In such an implementation, controller **42** utilizes signals from cameras **32** to verify that all of the surfaces of pool **22** have been cleaned, that no spots have been missed. Upon identifying a missed spot, controller **42** utilizes signals from camera **32** to steer vehicle **32** over such missed portions of surfaces **26**, **28**. According to one example, controller **42** not only uses signals from camera **32** to determine whether any portions of surfaces **26**, **28** have

been missed entirely, but to also determine whether any portions of surfaces **26**,**28** have been cleaned, but not to a satisfactory degree or extent. In such circumstances, controller **42** uses signals from cameras **32** to steer vehicle **34** such areas to re-clean such portions until such portions have been satisfactorily cleaned such that the portions have a cleanliness characteristic satisfying a predefined threshold.

FIG. **2** schematically illustrates pool cleaning system **120**, the particular example of pool cleaning system **20** described above. Pool cleaning system **120** is similar to pool cleaning system **20** except that pool cleaning system **120** additionally comprises dry station **46** and display **50**. Those remaining components of pool cleaning system **120** which correspond to components of pool cleaning system **20** are numbered similarly.

Dry station **46** comprises a station in communication with vehicle **30** and cameras **32** outside of pool **22**. Dry station **46** incorporates controller **42**. In one implementation, dry station **46** communicates with vehicle **30** in a wired fashion. In such an implementation, dry station **46** further provides electrical power to vehicle **30** in a wired fashion. Dry station **46** communicates with cameras **32** and either a wired or wireless fashion.

Display **50** comprises a device to present a graphical images and text on a display screen. In one implementation, display **58** may be incorporated as part of dry station **46**. In another implementation, display **50** may be provided on a portable electronic device, a computer, a television and the like. Display **50** is utilized by pool cleaning system **120** to present information regarding the cleaning of pool **22** to facilitate control of vehicle **30** by controller **42**. In one implementation, display **50** is utilized by pool cleaning system **120** and a controller **42** to present a graphical depiction of those portions of surfaces **26**, **28** of pool **22** have not been satisfactorily cleaned so as to satisfy a predefined cleanliness characteristic threshold. Such portions may comprise portions that have been completely missed by vehicle **30** as well as those portions that have been covered by vehicle **30** but have not been satisfactorily cleaned with the given number of passes of vehicle **30** or the existing cleaning settings of vehicle **30**. The graphical depiction presented on display **50** enables a person view the quality of the prior cleaning session and to input commands causing controller **42** to generate control signals using signals from camera **32** to steer vehicle **30** back to such identified portions where such portions may be cleaned at the same or elevated cleaning aggressiveness settings.

Another implementation, display **50** may be further utilized by controller **42** to depict the progress of vehicle **30** in cleaning pool **22**. Such a display **50** allows a person to visually determine how much of the pool has been currently cleaned and to estimate the remaining time before the pool cleaning task is completed. In certain circumstances, using display **50**, a person may adjust a setting of vehicle **30** to accelerate a rate at which surfaces **26**, **20** of pool **22** are cleaned to meet an earlier desired completion time for such pool cleaning.

FIG. **3** schematically illustrates pool cleaning system **220**, another example implementation of pool cleaning system **20**. Pool cleaning system **220** is similar to pool cleaning system **20** except that pool cleaning system **220** additionally comprises dry station **246**, display **50**, and remote server **254**. Those remaining components of pool cleaning system **220** which correspond to components of pool cleaning system **20** or pool cleaning system **120** are numbered similarly.

Dry station **246** is similar to dry station **46**, described above, except that dry station **246** serves as a local interface for communication with controller **42** across a network **260**. In one implementation, network **260** may comprise a local area network. In another implementation, network **260** may comprise a wide area network, such as the Internet. For example, in one implementation, dry station **246** may incorporate a modem. In one implementation, dry station **246** may communicate across a local area network to controller **42**. In another implementation, dry station **246** may communicate through a router, across a local area network, to a local modem which communicates across a network **260**. The example illustrated, dry station **246** further provides part of vehicle **30** across a wired cable or wired connection. Display **50** is described above with respect to system **120**.

Remote server **254** comprises a server remote from dry station **246** which is in communication with dry station **246** across network **260**. Remote server **254** includes controller **42**. During operation, signals from cameras **32** are transmitted across dry station **246** across network **260** to controller **42** of remote server **254**. Based upon such signals from cameras **32**, controller **42** generates control signals which are transmitted back across network **260** and through dry station **246** to vehicle **30** to steer vehicle **30**.

As shown by FIG. **3**, remote server **254** and network **260** may be shared as part of other pool cleaning systems **320**, wherein controller **42** generates control signals for steering the pool cleaning vehicle **30** of system **320** based upon signals from cameras **32** transmitted across dry station **246** of system **320**. In such an implementation, the cost and complexity of pool cleaning system **220** is reduced since controller **42** is remotely provided at remote server **254** which services multiple pool cleaning systems **220**,**320**. Upgrades to controller **42** and its software are also more easily achieved for all pool cleaning systems to **20**, **320** and their pools **22**, **222** being serviced. In one implementation, the supervised cleaning, inspection and possible re-cleaning facilitated by the use of cameras **32** may be provided as part of a subscription to users of vehicle **30**. In such an implementation, a pool **22** having security cameras **32** may be upgraded with appropriate software or an appropriate software module added to dry station **246** to make a network connection with controller **42** which directs the security cameras **32** to capture vehicle **30** utilizes such signals for steering vehicle **30**.

FIG. **4** schematically illustrates pool cleaning system **420**, another particular implementation of pool cleaning system **20**. Pool cleaning system **420** is similar to pool cleaning system **120** except that pool cleaning system **420** additionally comprises a portable electronic device **464**. Those remaining components of pool cleaning system **420** which correspond to components of pool cleaning system **120** are numbered similarly.

Portable electronic device **464** comprises a portable handheld electronic device in communication with controller **42** and/or dry station **46** across network **260**. Examples of such a portable electronic device (PED) **300** include, but are not limited to, a smart phone, a personal data assistant (PDA), laptop, notebook computer, tablet computer (e.g. IPAD) and MP3 player (e.g., IPOD TOUCH). In the example illustrated, PED **464** comprises input **466** and display **468**.

Input **466** serves as a user interface for PED **464** by which inputs are made to PED **464**. Input **466** facilitates entry of inputs or commands by a person to cause controller **42** to generate control signals varying the control of vehicle **30**. In one implementation, input **466** comprise a keyboard in other implementations, input **466** may comprise a touchpad, a

stylus, a microphone with associated speech recognition software or programming, a touch screen, buttons, switches and the like. In some implementations, input **466** may comprise a touch screen incorporated as part of display **468**.

Display **468** comprises a user interface by which graphical or textual data is presented to a user. Display **468** may present the same or similar information as presented at dry station **246** by display **50** as described above. In one implementation, display **468** comprises a liquid crystal display. In other implementations, display **468** may comprise other types of display technology such as a light emitting diode display, an organic light emitting diode display (OLED), an electronic ink (e-ink) display or other types of display technology in present use or developed in the future. Although system **420** is illustrated as including controller **422** is part of dry station **46**, in some implementations, controller **42** may alternatively be located as part of PED **464**.

PED **464** enables a person located remote from pool **22** to monitor the progress of the cleaning of pool **22** by vehicle **30** of system **420**. PED **464** provides a person with a graphical presentation (described above with respect to display **50**) indicating those portions of surfaces **26**, **28** of pool **22** that have been completed as well as those portions **26**, **20** and that remain to be cleaned. The person may also be provided with a graphical indication of what portions need to be re-cleaned to meet predetermined cleanliness thresholds. In the example illustrated, input **466** enables a person to enter commands or selections which are transmitted across network **260** to controller **42** to adjust operation of vehicle **30**. For example, the path or route of vehicle **30** may be changed, the aggressiveness of the cleaning chemicals or mechanical cleaning devices may be adjusted, the speed at which vehicle **30** traverses surfaces **26**, **28** may be adjusted. In response to such adjustment signals from PED **464**, controller **42** may utilize signals from cameras **32** to adjust the steering of vehicle **30**.

FIG. **5** schematically illustrates pool cleaning system **520**, another example implementation of pool cleaning system **20**. Pool cleaning system **520** is similar to pool cleaning system **420** except that pool cleaning system **520** additionally comprises a remote server **554**. Those remaining components of pool cleaning system **520** which correspond to components of pool cleaning system **420** are numbered similarly.

Remote server **554** is similar to remote server **254** described above with respect to system **220**. Remote server **554** comprises a server remote from dry station **246** which is in communication with dry station **246** across network **260**. Remote server **254** includes controller **42**. During operation, signals from cameras **32** are transmitted across dry station **246** across network **260** to controller **42** of remote server **254**. Based upon such signals from cameras **32**, controller **42** generates control signals which are transmitted back across network **260** and through dry station **246** to vehicle **30** to steer vehicle **30**. Controller **42** further relays either the raw signals from camera **32** or image signals generated based upon signals from cameras **32** to PED **464**, wherein such images (described above) are presented on display **468**. As noted above, PED may further receive commands through input **466**, wherein such commands are transmitted to controller **42** which generates control signals that are ultimately transmitted to vehicle **30** for steering vehicle **30**.

As with remote server **254**, remote server **554** and network **260** may be shared as part of other pool cleaning systems **320** (shown in FIG. **3**), wherein controller **42** generates control signals for steering the pool cleaning vehicle **30** of system **320** based upon signals from cameras **32** transmitted across dry station **246** of system **320**. In such implementations, controller **42** of remote server **554** may interact with other PEDs **464**. In such an implementation, the cost and complexity of pool cleaning system **220** is reduced since controller **42** is remotely provided at remote server **254** which services multiple pool cleaning systems **220**, **320**. Upgrades to controller **42** and its software are also more easily achieved for all pool cleaning systems to **20**, **320** and their pools **22**, **222** being serviced. In one implementation, the supervised cleaning, inspection and possible re-cleaning facilitated by the use of cameras **32** may be provided as part of a subscription to users of vehicle **30**. In such an implementation, a pool **22** having security cameras **32** may be upgraded with appropriate software or an appropriate software module added to dry station **246** to make a network connection with controller **42** which directs the security cameras **32** to capture vehicle **30** utilizes such signals for steering vehicle **30**. As indicated by broken lines, in other implementations, the controller **42** for generating control signals steering vehicle **30** based upon signals from cameras **32** may alternatively be relocated in PED **464**.

FIG. **6** is a flow diagram illustrating an example method **600** that may be carried out by any of systems **120-520**. As indicated by step **602**, cameras **32** capture images of pool cleaning by vehicle **30**. As indicated by step **604**, controller **42** obtain such signals from cameras **32** for the surfaces of pool **22** that have been cleaned. As indicated by step **606**, controller **42** uses information gathered from the signals from cameras **32** to identify those portions of surfaces **26**, **28** not satisfactorily cleaned—not satisfying a predefined cleanliness characteristic or measurement threshold. One example of a cleanliness characteristic measurement a threshold may be how well the color of a surface matches a predetermined desirable color for the pool surface (such as original color of the tile or surface). A surface that has been missed entirely by vehicle **30** during a pool cleaning session may be automatically deemed to not satisfy a predetermined cleanliness characteristic.

As indicated by step **608**, based upon such determinations, controller **42** generates control signals resulting in the presentation of a graphical depiction of those portions of pool **22** that has not been satisfactorily cleaned. Such graphical representations or depictions may be presented on display **50** or display **468**. FIGS. **7** and **8** illustrate examples of graphical depictions that may be presented.

FIG. **7** illustrates display **468** presenting graphical depiction **620**. Graphical depiction **620** comprises a first graphic **622** having a first portion **624** representing sides or walls **28** of pool **22** and a second portion **626** representing the floor **26** of pool **22**. Graphical depiction **620** further comprises a moving icon **628** representing the current positioning of vehicle **30**. In one implementation, the path of vehicle **30** may additionally be depicted by icon **628** shown in broken lines. As shown by FIG. **7**, those portions **632** of surfaces **26**, **28** of pool **22** (shown in FIG. **1**) over which of vehicle **30** has moved are identified by graphical depiction **620** either by color, markings or other various distinctive attributes. Likewise, those portions **634** of surfaces **26**, **28** of pool **22** that have not been covered by vehicle **30** are identified by a distinct color col marking or distinctive attribute of depiction **620**. As a result, a person may view the current position of vehicle **30**, the extent to which pool **22** has been cleaned or covered by vehicle **30** and the extent of pool **22** that remains to be cleaned. In the example illustrated, depiction **620** further identifies those portions **638** of surfaces **26**, **28**

that have been cleaned, but which have not been cleaned to a satisfactory degree or extent. In one implementation, portions **638** may be identified by colors, brightness, markings or other visually distinctive attributes that are visually distinct from both portions **632** and portions **634**. In other implementations, portions **638** may have the same characteristic of portions **634**. In yet other implementations, different portions **638** may have different visual attributes depending upon a degree to which such clean portions have failed to satisfy the predefined cleanliness characteristic threshold. In some implementations, different port **638** may have different visual attributes depending upon different cleaning strategies that may be recommended for the different portions **638**. For example, controller **42** may determine and recommend a first cleaning strategy (a first chemical solution jetted at a first rate and scrubbed at a first rate) with respect to a first portion **638** and may recommend a second different cleaning strategy (a second chemical solution jetted at a second rate is about a second rate) with respect to a second portion **638**, wherein the different cleaning strategies are represented by different visual attributes presented in depiction **620**.

FIG. **8** illustrates display **468** presenting a graphical depiction **720**. Graphical depiction **720** comprises a first graphic **622** having a first portion **624** representing sides or walls **28** of pool **22** and a second portion **626** representing the floor **26** of pool **22** (shown in FIG. **1**). Graphical depiction **720** is similar to graphical depiction **620** except that graphical depiction **720** omits icon **628** presenting vehicle **30**. Like depiction **620**, depiction **720** graphically depicts those portions **632** of surfaces **26**, **28** over which vehicle **30** has traveled while in a cleaning mode. Depiction **720** also visually depicts those portions **634** that have not been covered by vehicle **30** in the cleaning mode and those portions **638** over which vehicle **30** has traveled while in the cleaning mode, but which have not been cleaned to a satisfactory degree. As illustrated in FIG. **8**, different portions **638** may be visibly distinguished from one another through color, text or markings indicating either differences in the cleanliness of such portions **638** or indicating different recommended cleaning strategies or approaches that may be selected by a person using input **466** when vehicle **30** is steered back to such portions **638** for re-cleaning using signals from camera **32**.

As indicated by step **610** of FIG. **6**, controller **42** generates control signals steering vehicle **30** to re-clean portions of pool **22**, such as portions **638**. Such steering may be facilitated by using signals from cameras **32**. As noted above, in some implementations, a person may be allowed choose a cleaning approach for a particular portion **638** using input **466**. The selection may be facilitated by visual inspection of the different visual attributes for the particular portion **638** provided by depiction **720** (or depiction **620**). In some implementations, input **466** may additionally be utilized by a person to prioritize an order in which portions **638** are re-cleaned.

FIG. **9** illustrates pool cleaning system **820**, an example implementation of pool cleaning system **20**. Pool cleaning system **820** is similar to pool cleaning system **520** except the pool cleaning system **820** located controller **42** in dry station **246** and includes pool cleaning vehicle **830**, a specific example of vehicle **30**. As shown by FIG. **9**, in addition to transmitting control signals generated by controller **42** to vehicle **830**, dry station **246** further transmits power from power source **831** through a power line or power cable **833** to vehicle **830**. In the example illustrated, data communication and communication of control signals, also occurs across wired connections within or alongside the same line **833**. In the example illustrated, remote server **554** serves as a communication link by which upgrades to controller **42** may be implemented across a wide number of pool cleaning systems and by which information from controller **42** is conveyed to one or more portable electronic devices **464** across network **260**.

Vehicle **830** comprises a robotic or automated pool cleaning device. Vehicle **830** comprises a self-contained onboard filtration system with drive and pump motors. Vehicle **830** utilizes an internal microprocessor guided drive motor to systematically clean surfaces of pool **22**. As shown by FIGS. **9** and **10**, vehicle **830** utilizes a toothed track drive **900** provide traction and propulsion for vehicle **30**. Vehicle **830** comprises rotating brushes **902** to loosen waterline buildup and breakdown large debris while power washing jets **904** flush out dirt from pores, seems in corners where brushes **902** may not be able to reach. The loosened dirt and debris is vacuumed through off-center vacuum ports **906** which passes the vacuumed debris through internally house filter bag. In the example illustrated, vehicle **830** further comprises rollers **908** which inhibit vehicle **830** from becoming impeded or stuck on raised drains or pop-up heads. Although illustrated as being employed with system **820**, vehicle **830** may also be utilized with any of systems **20**, **120**, **220**, **320** and **420**. In other implementations, other robotic or automated pool cleaning vehicles may be utilized.

Although the present disclosure has been described with reference to example embodiments, workers skilled in the art will recognize that changes may be made in form and detail without departing from the spirit and scope of the claimed subject matter. For example, although different example embodiments may have been described as including one or more features providing one or more benefits, it is contemplated that the described features may be interchanged with one another or alternatively be combined with one another in the described example embodiments or in other alternative embodiments. Because the technology of the present disclosure is relatively complex, not all changes in the technology are foreseeable. The present disclosure described with reference to the example embodiments and set forth in the following claims is manifestly intended to be as broad as possible. For example, unless specifically otherwise noted, the claims reciting a single particular element also encompass a plurality of such particular elements.

What is claimed is:

1. A self-propelled pool cleaner for cleaning debris from a submerged surface of a swimming pool, comprising:

a. a vehicle body;

b. means for moving the vehicle body within the swimming pool;

c. a filter configured to retain debris collected from the submerged surface;

d. at least one camera positioned on or in the body for capturing an image of at least a first portion of the submerged surface; and

e. a controller (i) positioned on or in the body, (ii) in electronic communication with the at least one camera, and (iii) configured to generate, in response to the captured image, at least one control signal to cause movement of the body within the swimming pool to, or away from, the first portion of the submerged surface.

2. A system for cleaning debris from a submerged surface of a swimming pool, comprising:

a. a self-propelled pool cleaner comprising:

i. a vehicle body;

ii. means for moving the vehicle body within the swimming pool;

iii. at least one camera positioned on or in the body for capturing an image of at least a first portion of the submerged surface; and

iv. a controller (i) positioned on or in the body, (ii) in electronic communication with the at least one camera, and (iii) configured to generate, in response to the captured image, at least one control signal to cause movement of the body within the swimming pool to, or away from, the first portion of the submerged surface; and

b. a filter configured to retain debris collected from the submerged surface by the self-propelled pool cleaner.

3. A system for cleaning debris from a submerged surface of a swimming pool, comprising:

a. a self-propelled pool cleaner comprising:

i. a vehicle body;

ii. means for moving the vehicle body within the swimming pool;

iii. a filter configured to retain debris collected from the submerged surface; and

iv. at least one camera positioned on or in the body for capturing an image of at least a first portion of the submerged surface; and

b. a controller (i) in electronic communication with the at least one camera and (ii) configured to generate, in response to the captured image, at least one control signal to cause movement of the body within the swimming pool to, or away from, the first portion of the submerged surface.

* * * * *

EXHIBIT D

US010739785B2

(12) **United States Patent**
Durvasula et al.

(10) **Patent No.: US 10,739,785 B2**
(45) **Date of Patent: *Aug. 11, 2020**

(54) **POOL CLEANING SYSTEM AND METHOD TO AUTOMATICALLY CLEAN SURFACES OF A POOL USING IMAGES FROM A CAMERA**

(71) Applicant: **AQUA PRODUCTS, INC.**, Cedar Grove, NJ (US)

(72) Inventors: **Kameshwar Durvasula**, Garfield, NJ (US); **William Londono Correa**, Bloomfield, NJ (US)

(73) Assignee: **AQUA PRODUCTS, INC.**, Cedar Grove, NJ (US)

(*) Notice: Subject to any disclaimer, the term of this patent is extended or adjusted under 35 U.S.C. 154(b) by 0 days.

This patent is subject to a terminal disclaimer.

(21) Appl. No.: **16/416,840**

(22) Filed: **May 20, 2019**

(65) **Prior Publication Data**

US 2019/0271987 A1 Sep. 5, 2019

Related U.S. Application Data

(63) Continuation of application No. 15/973,983, filed on May 8, 2018, now Pat. No. 10,338,599, which is a (Continued)

(51) **Int. Cl.**
G05D 1/02 (2020.01)
H04N 7/18 (2006.01)
(Continued)

(52) **U.S. Cl.**
CPC ..... ***G05D 1/0246*** (2013.01); ***E04H 4/1654*** (2013.01); ***G05D 1/0016*** (2013.01); (Continued)

(58) **Field of Classification Search**
CPC .. G05D 1/0246; G05D 1/0016; G05D 1/0033; G05D 1/0038; G05D 1/0206; (Continued)

(56) **References Cited**

U.S. PATENT DOCUMENTS

5,205,174 A 4/1993 Silverman et al.
5,435,031 A 7/1995 Minami et al.
(Continued)

FOREIGN PATENT DOCUMENTS

CN 101139007 3/2008
EP 0687964 12/1995
(Continued)

OTHER PUBLICATIONS

Spanish Patent Application No. 201331047, Report of the State of the Art, Feb. 3, 2015, 1 page.
(Continued)

Primary Examiner — Allen C Wong
(74) *Attorney, Agent, or Firm* — Kilpatrick Townsend & Stockton LLP; Dean W. Russell

(57) **ABSTRACT**

A pool cleaning system for cleaning debris from a submerged surface of a swimming pool includes a self-propelled pool cleaner having rotatably-mounted supports for supporting and guiding the cleaner on the pool surface; an electric motor for enabling the rotation of the rotatably-mounted supports on the pool surface; at least one camera to capture imagery of the pool surface; a controller, in electronic communication with the at least one camera, to determine a cleanliness characteristic of the pool surface on which the cleaner has passed based on the camera imagery and generate a control signal to direct movement of the cleaner based on the cleanliness characteristic of the pool surface, and a portable electronic device configured to present a graphic on a display, the graphic depicting the (Continued)

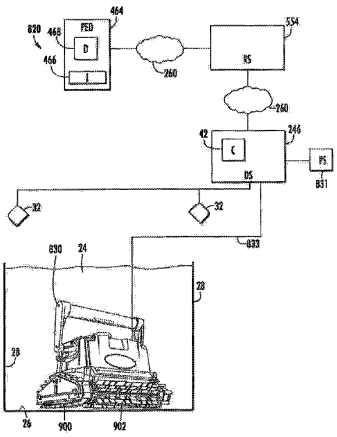

submerged surface of the pool and those portions of the surface that remain uncleaned as the cleaner traverses the pool surface.

6 Claims, 4 Drawing Sheets

Related U.S. Application Data

continuation of application No. 15/207,065, filed on Jul. 11, 2016, now Pat. No. 9,995,051, which is a continuation of application No. 13/545,918, filed on Jul. 10, 2012, now Pat. No. 9,388,595.

(51) **Int. Cl.**

H04N 5/232	(2006.01)
E04H 4/16	(2006.01)
G05D 1/00	(2006.01)
H04N 5/225	(2006.01)
G06T 7/90	(2017.01)
G06T 7/00	(2017.01)

(52) **U.S. Cl.**

CPC ***G05D 1/0033*** (2013.01); ***G05D 1/0038*** (2013.01); ***H04N 5/23203*** (2013.01); ***H04N 7/18*** (2013.01); *G05D 2201/0203* (2013.01); *G06T 7/001* (2013.01); *G06T 7/90* (2017.01); *G06T 2207/10024* (2013.01); *H04N 2005/2255* (2013.01)

(58) **Field of Classification Search**

CPC G05D 1/0253; G05D 2201/0203; H04N 5/23203; H04N 7/18; H04N 2005/2255; E04H 4/1654; G06T 7/90; G06T 7/001; G06T 2207/10024; B08B 9/08; B08B 9/46

USPC 348/114

See application file for complete search history.

(56) **References Cited**

U.S. PATENT DOCUMENTS

5,507,058	A	4/1996	Minami et al.	
5,613,261	A	3/1997	Kawakami et al.	
5,886,630	A	3/1999	Menoud	
7,123,746	B2	10/2006	Meniere et al.	
7,362,351	B2 *	4/2008	Meniere	G01V 8/10 348/135
7,398,138	B2	7/2008	Emery et al.	
7,993,600	B2	8/2011	Doyle et al.	
8,007,653	B2	8/2011	Porat	
8,043,070	B2	10/2011	Stiles, Jr. et al.	
9,388,595	B2	7/2016	Durvasula et al.	
9,995,051	B2	6/2018	Durvasula et al.	
10,338,599	B2	7/2019	Durvasula et al.	
2002/0097322	A1	7/2002	Monroe et al.	
2004/0025268	A1	2/2004	Porat et al.	
2004/0040581	A1	3/2004	Bruwer	
2007/0094817	A1	5/2007	Stoltz et al.	
2010/0299016	A1	11/2010	Benzler et al.	
2011/0049023	A1 *	3/2011	Hui	E04H 4/1654 210/91
2011/0091329	A1	4/2011	Stiles, Jr. et al.	
2011/0290707	A1 *	12/2011	Porat	C02F 1/4674 210/96.1
2011/0301752	A1	12/2011	Finezilber	
2013/0151061	A1	6/2013	Hong et al.	
2013/0152970	A1 *	6/2013	Porat	E04H 4/1654 134/18
2013/0269097	A1	10/2013	Alammari	
2014/0009748	A1	1/2014	Leonessa et al.	

FOREIGN PATENT DOCUMENTS

EP	0811432	12/1997	
JP	6162905	3/1986	
WO	2004019295	3/2004	
WO	2009031361	3/2009	
WO	2012023676	2/2012	
WO	WO 2012023676 A1 *	2/2012	B08B 9/08

OTHER PUBLICATIONS

U.S. Appl. No. 13/545,918, Corrected Notice of Allowability dated Jun. 8, 2016, 2 pages.
U.S. Appl. No. 13/545,918, Non-Final Office Action dated Jun. 26, 2015, 17 pages.
U.S. Appl. No. 13/545,918, Notice of Allowability dated Mar. 9, 2016, 8 pages.
U.S. Appl. No. 13/545,918, Notice of Allowance dated Dec. 31, 2015, 8 pages.
U.S. Appl. No. 15/207,065, Non-Final Office Action dated Nov. 6, 2017, 10 pages.
U.S. Appl. No. 15/207,065, Notice of Allowance dated Feb. 23, 2018, 9 pages.
U.S. Appl. No. 15/973,983, Non-Final Office Action dated Nov. 6, 2018, 7 pages.
U.S. Appl. No. 15/973,983, Notice of Allowance dated Mar. 4, 2019, 9 pages.

* cited by examiner

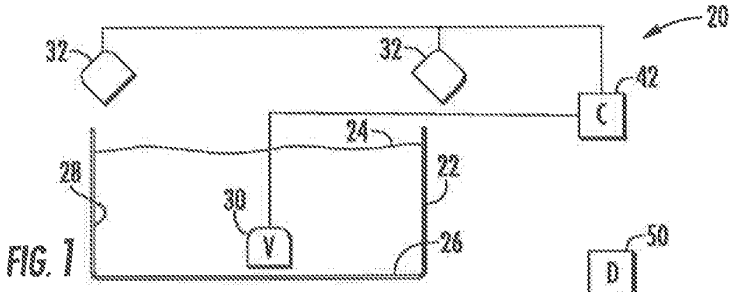

FIG. 1

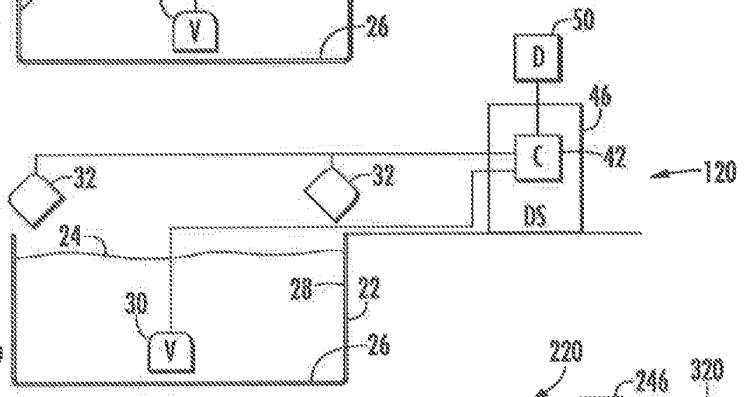

FIG. 2

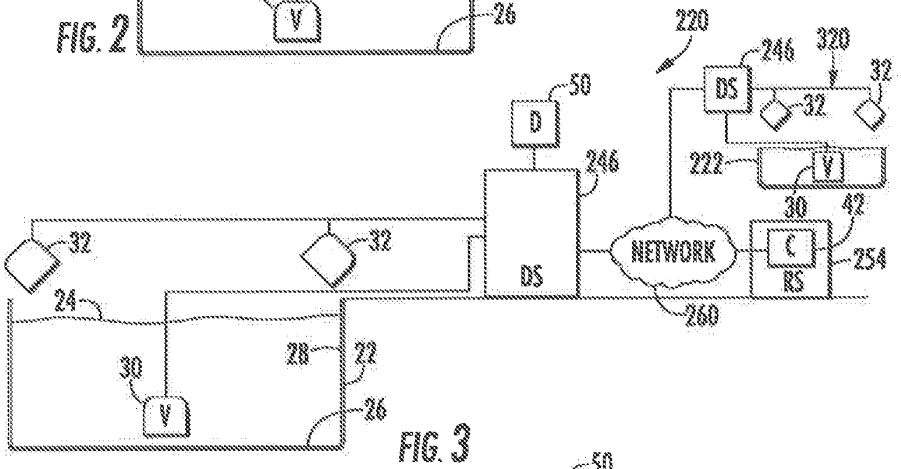

FIG. 3

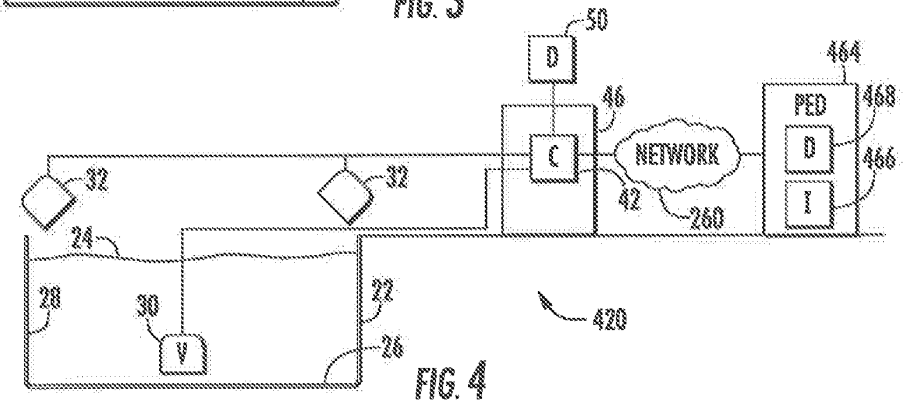

FIG. 4

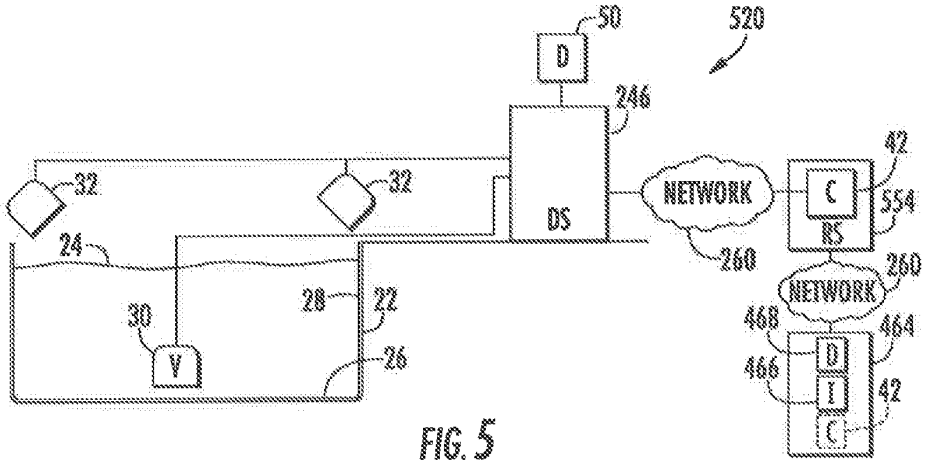

FIG. 5

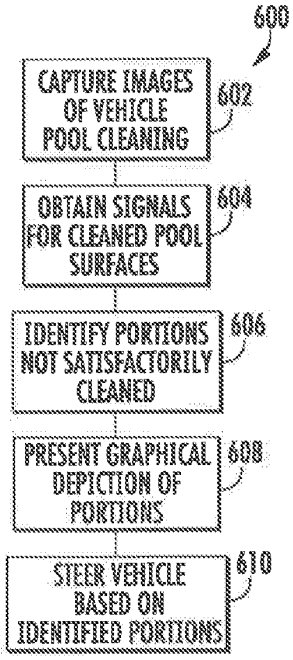

FIG. 6

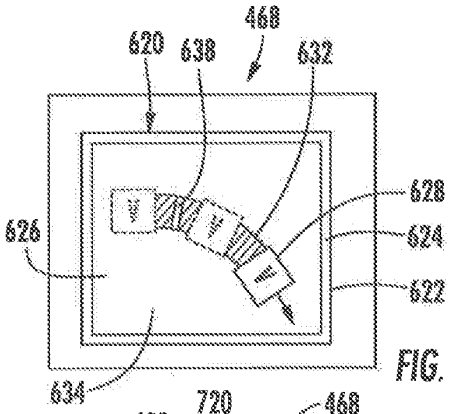

FIG. 7

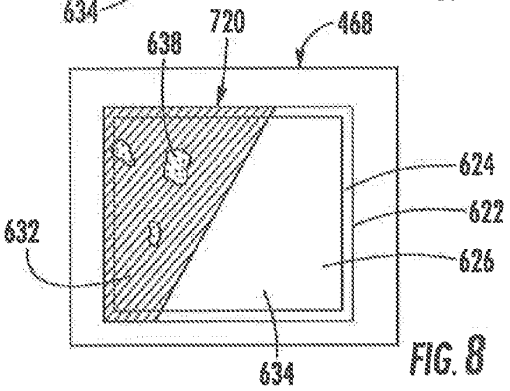

FIG. 8

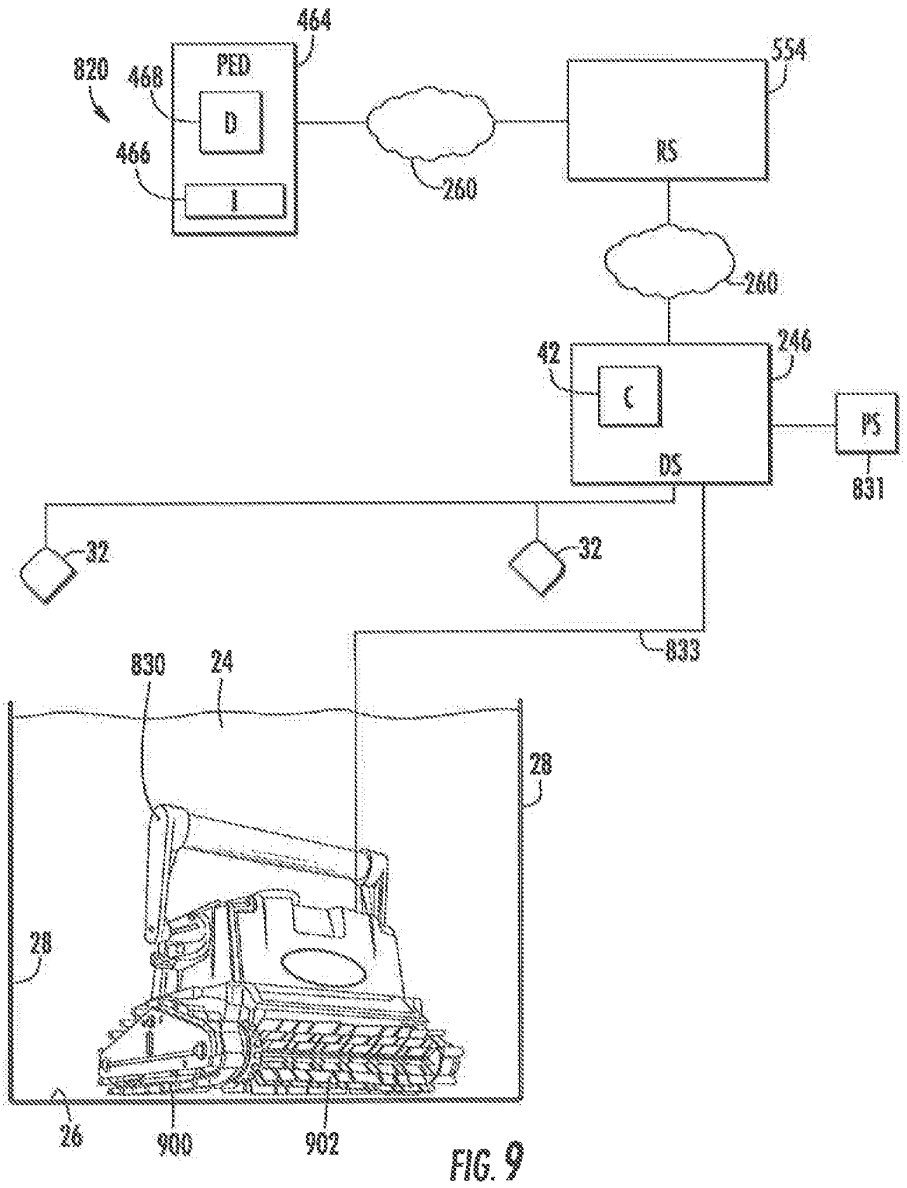
464
820
468
PED
D
466
I
260
554
RS
260
42
246
C
PS
DS
831
32
32
833
830
24
28
28
26
900
902

FIG. 9

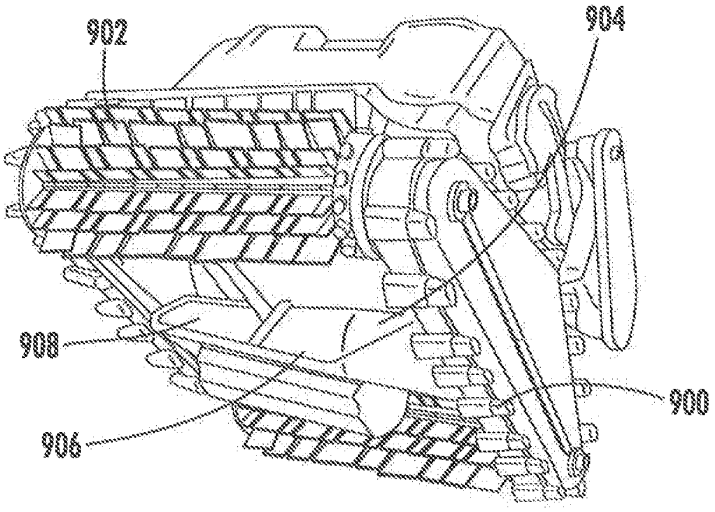

FIG. 10

POOL CLEANING SYSTEM AND METHOD TO AUTOMATICALLY CLEAN SURFACES OF A POOL USING IMAGES FROM A CAMERA

CROSS-REFERENCE TO RELATED APPLICATION

This application is a continuation of commonly owned U.S. patent application Ser. No. 15/973,983, filed May 8, 2018, which is a continuation of U.S. patent application Ser. No. 15/207,065, filed Jul. 11, 2016 (now U.S. Pat. No. 9,995,051), which is a continuation of U.S. patent application Ser. No. 13/545,918, filed Jul. 10, 2012 (now U.S. Pat. No. 9,388,595), the contents of all of which are incorporated herein by reference in their entireties.

BACKGROUND

Manually cleaning the floor and sides of a swimming pool may be a tedious and time-consuming task. As a result, automated robotic pool cleaners have been developed. However, controlling and monitoring such automated robotic pool cleaners to insure that all portions of the pool surfaces are satisfactorily cleaned remains a challenge.

SUMMARY OF THE INVENTION

The disadvantages heretofore associated with the prior art are overcome by the present invention of a pool cleaning system for cleaning debris from a submerged surface of a swimming pool comprising: a self-propelled pool cleaner having rotatably-mounted supports for supporting and guiding the cleaner on the pool surface; a filter configured to retain the debris collected from the submerged surface of the swimming pool; an electric motor for enabling the rotation of the rotatably-mounted supports on the pool surface; at least one camera to capture imagery of the pool surface; a controller, in electronic communication with the at least one camera, to determine a cleanliness characteristic of the pool surface on which the cleaner has passed based on the camera imagery and generate a control signal to direct movement of the cleaner based on the cleanliness characteristic of the pool surface; and a portable electronic device is configured to present a graphic on a display, the graphic depicting the submerged surface of the pool and those portions of the surface that remain uncleaned as the cleaner traverses the pool surface.

In one aspect, the at least one camera is carried by the cleaner. In another aspect, the controller is carried by the cleaner. In still another aspect, the electric motor is mechanically connected to at least one of the rotatably-mounted supports.

In yet another aspect, the controller is operable to execute one or more cleaning programs for cleaning the submerged surfaces of the pool. In one aspect, the control signal causes the cleaner to drive in a direction to clean a portion of the pool surface based on the cleanliness characteristic of the pool surface. Alternatively, the control signal causes the cleaner to steer in a direction to clean a portion of the pool surface based on the cleanliness characteristic of the pool surface. In another aspect, the control signal causes the cleaner to drive in a direction to re-clean a portion of the pool surface over which the cleaner has passed. Alternatively, the control signal causes the cleaner to steer in a direction to re-clean a portion of the pool surface over which the cleaner has passed.

In one aspect, the captured imagery from the at least one camera is digitally processed by the controller to determine the cleanliness characteristic of the pool surface. Alternatively, the captured imagery from the at least one camera is digitally processed by a remote processor to determine the cleanliness characteristic of the pool surface.

In another aspect, the system further comprises a dry station located remotely from the cleaner and in communication with the cleaner, wherein the dry station includes the controller. Alternatively, the system further comprises a dry station located remotely from the cleaner and in communication with the cleaner, wherein the controller is located remotely from the cleaner and the dry station. In still another aspect, the controller controls electric power provided to the electric motor.

In one aspect, the control signal causes the cleaner to move in a direction of a portion of the pool surface to be cleaned based solely upon signals received from the camera. In another aspect, the control signal causes the cleaner to drive in a direction to clean a portion of the pool surface based on the cleanliness characteristic of the pool surface. Alternatively, the control signal causes the cleaner to steer in a direction to clean a portion of the pool surface based on the cleanliness characteristic of the pool surface. In yet another aspect, the control signal causes the cleaner to drive in a direction to re-clean a portion of the pool surface over which the cleaner has passed. Alternatively, the control signal causes the cleaner to steer in a direction to re-clean a portion of the pool surface over which the cleaner has passed.

BRIEF DESCRIPTION OF THE DRAWINGS

FIG. **1** is a schematic illustration of an ex ample pool cleaning system.

FIG. **2** is a schematic illustration of an implementation of the pool cleaning system of FIG. **1**.

FIG. **3** is a schematic illustration of an implementation of the pool cleaning system of FIG. **1**.

FIG. **4** is a schematic illustration of an implementation of the pool cleaning system of FIG. **1**.

FIG. **5** is a schematic illustration of an implementation of the pool cleaning system of FIG. **1**.

FIG. **6** is a flow diagram of an example method that may be carried out with the pool cleaning system of FIG. **2-5**.

FIG. **7** is a plan view of an example display with an example graphical depiction.

FIG. **8** is a plan view of another example display with an example graphical depiction.

FIG. **9** is a schematic illustration of an implementation of the pool cleaning system of FIG. **1** with an example pool cleaning vehicle.

FIG. **10** is a bottom perspective view of the example pool cleaning vehicle of the system of FIG. **9**.

DETAILED DESCRIPTION OF THE EXAMPLE EMBODIMENTS

FIG. **1** schematically illustrates an example pool cleaning system **20**. As schematically shown by FIG. **1**, pool cleaning system **20** is adapted to clean submerged surfaces of a pool **22** containing a liquid **24**. In particular, pool cleaning system **20** is adapted to clean at least a bottom or floor surface **26** of the pool **22** and possibly to additionally clean surfaces **28** of pool **22**. As will be described hereafter, pool cleaning system facilitates the control and monitoring of a robotic pool cleaner to better assure that all portions of pool **22** are satisfactorily cleaned.

Pool cleaning system **20** comprises vehicle **30**, cameras **32** and controller **42**. Vehicle **30** comprises an automated powered device configured to travel adjacent to submerged or water containing surfaces of pool **20** (such as floor **26** and/or side surfaces **28**) while cleaning such surfaces. In one implementation, vehicle **30** may include vacuum or suction devices, a liquid circulation system and a filter to draw debris, such as bacterial growth or plant growth, from such pool surfaces, wherein the drawn liquid containing such residue or foreign matter is filtered to collect the debris. In other implementations, vehicle **30** may not collect such debris, wherein vehicle **30** merely loosens such debris on the pool surfaces such that the loosened or separated debris may be subsequently removed using the existing liquid filtering system of pool **22**.

To assist in the loosening of debris, in one implementation, vehicle **30** may additionally include a chemical dispenser to closely apply pool cleaning chemicals to the pool surfaces as the vehicle **30** traverses such surfaces. In one implementation, vehicle **30** may additionally or alternatively include one or more scrubbing members, such as active (driven) or passive (undriven or idling) brushes, to assist in the removal of residue or foreign matter from such pool surfaces. In yet another implementation, vehicle **30** may additionally or alternatively include liquid jets to assist in the loosening of debris.

To move along the submerged surfaces of pool **22**, vehicle **30** includes one or more propulsion mechanisms. In one implementation, vehicle **30** is propelled along the submerged pool surfaces using wheels, rollers, tracks or other surface contacting members powered by a motor and the like. Such wheels, rollers or tracks may themselves include the scrubbing members used to clean the surfaces. In one implementation vehicle **30** may also alternatively be propelled by means of the vacuum or liquid jets. The vacuum or liquid jets used for such propulsion nozzle facilitate loosening of debris for collection by vehicle **30**. In other implementations, vehicle **30** may include other propulsion mechanisms.

Cameras **32** comprise devices configured to capture video or time lapse images of pool **22**. In the example illustrated, cameras **32** are mounted on structures external to pool **22**. In other words, cameras **32** are not submerged. In other implementations, cameras **32** may alternatively be mounted to vehicle **30**. In the example illustrated, cameras **32** capture movement of vehicle **30** while vehicle **30** is submerged within pool **22**. In other implementations, cameras **32** merely capture images of submerged surfaces **26**, **28** of pool **22**.

In the example illustrated, cameras **32** comprise cameras serving as part of a home or pool security system, wherein such cameras detect the presence of a person at pool **22** satisfying a predefined characteristic and wherein an alert is output upon the person's detected presence. For example, in one implementation, cameras **32** are utilized as part of a security system that detects when a person below a predefined age, such as a child, is present at pool **22** without a detected presence of a recognized adult. In another implementation, cameras **32** may detect the presence of an unauthorized person or intruder at pool **22**. Identification of the person may be achieved by an off-site human or computerized monitoring system, wherein signals from cameras **32** are transmitted across a wide area network or may be achieved with software of controller **42** which includes facial recognition or other identification programming.

Because pool cleaning system **20** utilizes pre-existing cameras **32** provided as part of a security system or shares the use of cameras **32** with such a home or pool security system, pool cleaning system **20** is easier to set up, less complex and less expensive. In other implementations, pool cleaning system **20** may utilize dedicated cameras **22** independent of any cameras associated with a home, facility or pool security system. In such an alternative system, cameras **32** may be more precisely focused upon pool **22** and surfaces **26**, **28** while also including appropriate lenses or modifications to account for glare, refraction and the like to better facilitate the capture of surfaces and vehicle **30** which are submerged.

Controller **42** comprises one or more processing units in communication with vehicle **30** and cameras **32**. For purposes of this application, the term "processing unit" shall mean a presently developed or future developed processing unit that executes sequences of instructions contained in a memory. Execution of the sequences of instructions causes the processing unit to perform steps such as generating control signals. The instructions may be loaded in a random access memory (RAM) for execution by the processing unit from a read only memory (ROM), a mass storage device, or some other persistent storage. In other embodiments, hard wired circuitry may be used in place of or in combination with software instructions to implement the functions described. For example, controller **42** may be embodied as part of one or more application-specific integrated circuits (ASICs). Unless otherwise specifically noted, the controller is not limited to any specific combination of hardware circuitry and software, nor to any particular source for the instructions executed by the processing unit.

In one implementation, controller **42** communicates with vehicle **30** and cameras **32** entirely across a wired connection. In another implementation, controller **42** communicates with vehicle **30** and cameras **32** across a wireless connection, such as cross a local area network (LAN) or a wide area network (WAN) such as the Internet. One of limitation, controller **42** may communicate with vehicle **30** and cameras **32** using a combination of both wired and wireless communication connections.

Controller **42** is configured to generate control signals for steering vehicle **30** based upon signals received from cameras **32**. In one implementation, controller **42** provides the sole steering directions for vehicle **30** using signals from cameras **32**. Because vehicle **30** is precisely steered under the control of controller **42**, rather than traveling in a random manner, entire summer surfaces of pool **22** may be more quickly and efficiently covered and cleaned. Because controller **42** provides the only steering instructions for vehicle **30** and utilizes signals from cameras **32**, complex steering algorithms or codes in either vehicle **30** or controller **42** may be omitted to reduce complexity and cost of system **20**.

In another implementation, vehicle **30** may cover or travel across surfaces of pool **22** in either a random fashion or according to an automated pool coverage algorithm or pool coverage pattern stored in a memory associated with vehicle **30** or controller **42**. In such an implementation, controller **42** utilizes signals from cameras **32** to verify that all of the surfaces of pool **22** have been cleaned, that no spots have been missed. Upon identifying a missed spot, controller **42** utilizes signals from camera **32** to steer vehicle **32** over such missed portions of surfaces **26**, **28**. According to one example, controller **42** not only uses signals from camera **32** to determine whether any portions of surfaces **26**, **28** have been missed entirely, but to also determine whether any portions of surfaces **26**,**28** have been cleaned, but not to a satisfactory degree or extent. In such circumstances, controller **42** uses signals from cameras **32** to steer vehicle **34**

such areas to re-clean such portions until such portions have been satisfactorily cleaned such that the portions have a cleanliness characteristic satisfying a predefined threshold.

FIG. **2** schematically illustrates pool cleaning system **120**, the particular example of pool cleaning system **20** described above. Pool cleaning system **120** is similar to pool cleaning system **20** except that pool cleaning system **120** additionally comprises dry station **46** and display **50**. Those remaining components of pool cleaning system **120** which correspond to components of pool cleaning system **20** are numbered similarly.

Dry station **46** comprises a station in communication with vehicle **30** and cameras **32** outside of pool **22**. Dry station **46** incorporates controller **42**. In one implementation, dry station **46** communicates with vehicle **30** in a wired fashion. In such an implementation, dry station **46** further provides electrical power to vehicle **30** in a wired fashion. Dry station **46** communicates with cameras **32** and either a wired or wireless fashion.

Display **50** comprises a device to present a graphical images and text on a display screen. In one implementation, display **58** may be incorporated as part of dry station **46**. In another implementation, display **50** may be provided on a portable electronic device, a computer, a television and the like. Display **50** is utilized by pool cleaning system **120** to present information regarding the cleaning of pool **22** to facilitate control of vehicle **30** by controller **42**. In one implementation, display **50** is utilized by pool cleaning system **120** and a controller **42** to present a graphical depiction of those portions of surfaces **26**, **28** of pool **22** have not been satisfactorily cleaned so as to satisfy a predefined cleanliness characteristic threshold. Such portions may comprise portions that have been completely missed by vehicle **30** as well as those portions that have been covered by vehicle **30** but have not been satisfactorily cleaned with the given number of passes of vehicle **30** or the existing cleaning settings of vehicle **30**. The graphical depiction presented on display **50** enables a person view the quality of the prior cleaning session and to input commands causing controller **42** to generate control signals using signals from camera **32** to steer vehicle **30** back to such identified portions where such portions may be cleaned at the same or elevated cleaning aggressiveness settings.

Another implementation, display **50** may be further utilized by controller **42** to depict the progress of vehicle **30** in cleaning pool **22**. Such a display **50** allows a person to visually determine how much of the pool has been currently cleaned and to estimate the remaining time before the pool cleaning task is completed. In certain circumstances, using display **50**, a person may adjust a setting of vehicle **30** to accelerate a rate at which surfaces **26**, **20** of pool **22** are cleaned to meet an earlier desired completion time for such pool cleaning.

FIG. **3** schematically illustrates pool cleaning system **220**, another example implementation of pool cleaning system **20**. Pool cleaning system **220** is similar to pool cleaning system **20** except that pool cleaning system **220** additionally comprises dry station **246**, display **50**, and remote server **254**. Those remaining components of pool cleaning system **220** which correspond to components of pool cleaning system **20** or pool cleaning system **120** are numbered similarly.

Dry station **246** is similar to dry station **46**, described above, except that dry station **246** serves as a local interface for communication with controller **42** across a network **260**. In one implementation, network **260** may comprise a local area network. In another implementation, network **260** may comprise a wide area network, such as the Internet. For example, in one implementation, dry station **246** may incorporate a modem. In one implementation, dry station **246** may communicate across a local area network to controller **42**. In another implementation, dry station **246** may communicate through a router, across a local area network, to a local modem which communicates across a network **260**. The example illustrated, dry station **246** further provides part of vehicle **30** across a wired cable or wired connection. Display **50** is described above with respect to system **120**.

Remote server **254** comprises a server remote from dry station **246** which is in communication with dry station **246** across network **260**. Remote server **254** includes controller **42**. During operation, signals from cameras **32** are transmitted across dry station **246** across network **260** to controller **42** of remote server **254**. Based upon such signals from cameras **32**, controller **42** generates control signals which are transmitted back across network **260** and through dry station **246** to vehicle **30** to steer vehicle **30**.

As shown by FIG. **3**, remote server **254** and network **260** may be shared as part of other pool cleaning systems **320**, wherein controller **42** generates control signals for steering the pool cleaning vehicle **30** of system **320** based upon signals from cameras **32** transmitted across dry station **246** of system **320**. In such an implementation, the cost and complexity of pool cleaning system **220** is reduced since controller **42** is remotely provided at remote server **254** which services multiple pool cleaning systems **220**,**320**. Upgrades to controller **42** and its software are also more easily achieved for all pool cleaning systems to **20**, **320** and their pools **22**, **222** being serviced. In one implementation, the supervised cleaning, inspection and possible re-cleaning facilitated by the use of cameras **32** may be provided as part of a subscription to users of vehicle **30**. In such an implementation, a pool **22** having security cameras **32** may be upgraded with appropriate software or an appropriate software module added to dry station **246** to make a network connection with controller **42** which directs the security cameras **32** to capture vehicle **30** utilizes such signals for steering vehicle **30**.

FIG. **4** schematically illustrates pool cleaning system **420**, another particular implementation of pool cleaning system **20**. Pool cleaning system **420** is similar to pool cleaning system **120** except that pool cleaning system **420** additionally comprises a portable electronic device **464**. Those remaining components of pool cleaning system **420** which correspond to components of pool cleaning system **120** are numbered similarly.

Portable electronic device **464** comprises a portable handheld electronic device in communication with controller **42** and/or dry station **46** across network **260**. Examples of such a portable electronic device (PED) **300** include, but are not limited to, a smart phone, a personal data assistant (PDA), laptop, notebook computer, tablet computer (e.g. IPAD) and MP3 player (e.g., IPOD TOUCH). In the example illustrated, PED **464** comprises input **466** and display **468**.

Input **466** serves as a user interface for PED **464** by which inputs are made to PED **464**. Input **466** facilitates entry of inputs or commands by a person to cause controller **42** to generate control signals varying the control of vehicle **30**. In one implementation, input **466** comprise a keyboard. In other implementations, input **466** may comprise a touchpad, a stylus, a microphone with associated speech recognition software or programming, a touch screen, buttons, switches and the like. In some implementations, input **466** may comprise a touch screen incorporated as part of display **468**.

Display **468** comprises a user interface by which graphical or textual data is presented to a user. Display **468** may present the same or similar information as presented at dry station **246** by display **50** as described above. In one implementation, display **468** comprises a liquid crystal display. In other implementations, display **468** may comprise other types of display technology such as a light emitting diode display, an organic light emitting diode display (OLED), an electronic ink (e-ink) display or other types of display technology in present use or developed in the future. Although system **420** is illustrated as including controller **422** is part of dry station **46**, in some implementations, controller **42** may alternatively be located as part of PED **464**.

PED **464** enables a person located remote from pool **22** to monitor the progress of the cleaning of pool **22** by vehicle **30** of system **420**. PED **464** provides a person with a graphical presentation (described above with respect to display **50**) indicating those portions of surfaces **26**, **28** of pool **22** that have been completed as well as those portions **26**, **20** and that remain to be cleaned. The person may also be provided with a graphical indication of what portions need to be re-cleaned to meet predetermined cleanliness thresholds. In the example illustrated, input **466** enables a person to enter commands or selections which are transmitted across network **260** to controller **42** to adjust operation of vehicle **30**. For example, the path or route of vehicle **30** may be changed, the aggressiveness of the cleaning chemicals or mechanical cleaning devices may be adjusted, the speed at which vehicle **30** traverses surfaces **26**, **28** may be adjusted. In response to such adjustment signals from PED **464**, controller **42** may utilize signals from cameras **32** to adjust the steering of vehicle **30**.

FIG. **5** schematically illustrates pool cleaning system **520**, another example implementation of pool cleaning system **20**. Pool cleaning system **520** is similar to pool cleaning system **420** except that pool cleaning system **520** additionally comprises a remote server **554**. Those remaining components of pool cleaning system **520** which correspond to components of pool cleaning system **420** are numbered similarly.

Remote server **554** is similar to remote server **254** described above with respect to system **220**. Remote server **554** comprises a server remote from dry station **246** which is in communication with dry station **246** across network **260**. Remote server **254** includes controller **42**. During operation, signals from cameras **32** are transmitted across dry station **246** across network **260** to controller **42** of remote server **254**. Based upon such signals from cameras **32**, controller **42** generates control signals which are transmitted back across network **260** and through dry station **246** to vehicle **30** to steer vehicle **30**. Controller **42** further relays either the raw signals from camera **32** or image signals generated based upon signals from cameras **32** to PED **464**, wherein such images (described above) are presented on display **468**. As noted above, PED may further receive commands through input **466**, wherein such commands are transmitted to controller **42** which generates control signals that are ultimately transmitted to vehicle **30** for steering vehicle **30**.

As with remote server **254**, remote server **554** and network **260** may be shared as part of other pool cleaning systems **320** (shown in FIG. **3**), wherein controller **42** generates control signals for steering the pool cleaning vehicle **30** of system **320** based upon signals from cameras **32** transmitted across dry station **246** of system **320**. In such implementations, controller **42** of remote server **554** may interact with other PEDs **464**. In such an implementation, the cost and complexity of pool cleaning system **220** is reduced since controller **42** is remotely provided at remote server **254** which services multiple pool cleaning systems **220**, **320**. Upgrades to controller **42** and its software are also more easily achieved for all pool cleaning systems to **20**, **320** and their pools **22**, **222** being serviced. In one implementation, the supervised cleaning, inspection and possible re-cleaning facilitated by the use of cameras **32** may be provided as part of a subscription to users of vehicle **30**. In such an implementation, a pool **22** having security cameras **32** may be upgraded with appropriate software or an appropriate software module added to dry station **246** to make a network connection with controller **42** which directs the security cameras **32** to capture vehicle **30** utilizes such signals for steering vehicle **30**. As indicated by broken lines, in other implementations, the controller **42** for generating control signals steering vehicle **30** based upon signals from cameras **32** may alternatively be relocated in PED **464**.

FIG. **6** is a flow diagram illustrating an example method **600** that may be carried out by any of systems **120-520**. As indicated by step **602**, cameras **32** capture images of pool cleaning by vehicle **30**. As indicated by step **604**, controller **42** obtain such signals from cameras **32** for the surfaces of pool **22** that have been cleaned. As indicated by step **606**, controller **42** uses information gathered from the signals from cameras **32** to identify those portions of surfaces **26**, **28** not satisfactorily cleaned—not satisfying a predefined cleanliness characteristic or measurement threshold. One example of a cleanliness characteristic measurement a threshold may be how well the color of a surface matches a predetermined desirable color for the pool surface (such as original color of the tile or surface). A surface that has been missed entirely by vehicle **30** during a pool cleaning session may be automatically deemed to not satisfy a predetermined cleanliness characteristic.

As indicated by step **608**, based upon such determinations, controller **42** generates control signals resulting in the presentation of a graphical depiction of those portions of pool **22** that has not been satisfactorily cleaned. Such graphical representations or depictions may be presented on display **50** or display **468**. FIGS. **7** and **8** illustrate examples of graphical depictions that may be presented.

FIG. **7** illustrates display **468** presenting graphical depiction **620**. Graphical depiction **620** comprises a first graphic **622** having a first portion **624** representing sides or walls **28** of pool **22** and a second portion **626** representing the floor **26** of pool **22**. Graphical depiction **620** further comprises a moving icon **628** representing the current positioning of vehicle **30**. In one implementation, the path of vehicle **30** may additionally be depicted by icon **628** shown in broken lines. As shown by FIG. **7**, those portions **632** of surfaces **26**, **28** of pool **22** (shown in FIG. **1**) over which of vehicle **30** has moved are identified by graphical depiction **620** either by color, markings or other various distinctive attributes. Likewise, those portions **634** of surfaces **26**, **28** of pool **22** that have not been covered by vehicle **30** are identified by a distinct color col marking or distinctive attribute of depiction **620**. As a result, a person may view the current position of vehicle **30**, the extent to which pool **22** has been cleaned or covered by vehicle **30** and the extent of pool **22** that remains to be cleaned. In the example illustrated, depiction **620** further identifies those portions **638** of surfaces **26**, **28** that have been cleaned, but which have not been cleaned to a satisfactory degree or extent. In one implementation, portions **638** may be identified by colors, brightness, markings or other visually distinctive attributes that are visually

distinct from both portions **632** and portions **634**. In other implementations, portions **638** may have the same characteristic of portions **634**. In yet other implementations, different portions **638** may have different visual attributes depending upon a degree to which such clean portions have failed to satisfy the predefined cleanliness characteristic threshold. In some implementations, different port **638** may have different visual attributes depending upon different cleaning strategies that may be recommended for the different portions **638**. For example, controller **42** may determine and recommend a first cleaning strategy (a first chemical solution jetted at a first rate and scrubbed at a first rate) with respect to a first portion **638** and may recommend a second different cleaning strategy (a second chemical solution jetted at a second rate is about a second rate) with respect to a second portion **638**, wherein the different cleaning strategies are represented by different visual attributes presented in depiction **620**.

FIG. **8** illustrates display **468** presenting a graphical depiction **720**. Graphical depiction **720** comprises a first graphic **622** having a first portion **624** representing sides or walls **28** of pool **22** and a second portion **626** representing the floor **26** of pool **22** (shown in FIG. **1**). Graphical depiction **720** is similar to graphical depiction **620** except that graphical depiction **720** omits icon **628** presenting vehicle **30**. Like depiction **620**, depiction **720** graphically depicts those portions **632** of surfaces **26**, **28** over which vehicle **30** has traveled while in a cleaning mode. Depiction **720** also visually depicts those portions **634** that have not been covered by vehicle **30** in the cleaning mode and those portions **638** over which vehicle **30** has traveled while in the cleaning mode, but which have not been cleaned to a satisfactory degree. As illustrated in FIG. **8**, different portions **638** may be visibly distinguished from one another through color, text or markings indicating either differences in the cleanliness of such portions **638** or indicating different recommended cleaning strategies or approaches that may be selected by a person using input **466** when vehicle **30** is steered back to such portions **638** for re-cleaning using signals from camera **32**.

As indicated by step **610** of FIG. **6**, controller **42** generates control signals steering vehicle **30** to re-clean portions of pool **22**, such as portions **638**. Such steering may be facilitated by using signals from cameras **32**. As noted above, in some implementations, a person may be allowed choose a cleaning approach for a particular portion **638** using input **466**. The selection may be facilitated by visual inspection of the different visual attributes for the particular portion **638** provided by depiction **720** (or depiction **620**). In some implementations, input **466** may additionally be utilized by a person to prioritize an order in Which portions **638** are re-cleaned.

FIG. **9** illustrates pool cleaning system **820**, an example implementation of pool cleaning system **20**. Pool cleaning system **820** is similar to pool cleaning system **520** except the pool cleaning system **820** located controller **42** in dry station **246** and includes pool cleaning vehicle **830**, a specific example of vehicle **30**. As shown by FIG. **9**, in addition to transmitting control signals generated by controller **42** to vehicle **830**, dry station **246** further transmits power from power source **831** through a power line or power cable **833** to vehicle **830**. In the example illustrated, data communication and communication of control signals, also occurs across wired connections within or alongside the same line **833**. In the example illustrated, remote server **554** serves as a communication link by which upgrades to controller **42** may be implemented across a wide number of pool cleaning systems and by which information from controller **42** is conveyed to one or more portable electronic devices **464** across network **260**.

Vehicle **830** comprises a robotic or automated pool cleaning device. Vehicle **830** comprises a self-contained onboard filtration system with drive and pump motors. Vehicle **830** utilizes an internal microprocessor guided drive motor to systematically clean surfaces of pool **22**. As shown by FIGS. **9** and **10**, vehicle **830** utilizes a toothed track drive **900** provide traction and propulsion for vehicle **30**. Vehicle **830** comprises rotating brushes **902** to loosen waterline buildup and breakdown large debris while power washing jets **904** flush out dirt from pores, seems in corners where brushes **902** may not be able to reach. The loosened dirt and debris is vacuumed through off-center vacuum ports **906** which passes the vacuumed debris through internally house filter bag. In the example illustrated, vehicle **830** further comprises rollers **908** which inhibit vehicle **830** from becoming impeded or stuck on raised drains or pop-up heads. Although illustrated as being employed with system **820**, vehicle **830** may also be utilized with any of systems **20**, **120**, **220**, **320** and **420**. In other implementations, other robotic or automated pool cleaning vehicles may be utilized.

Although the present disclosure has been described with reference to example embodiments, workers skilled in the art will recognize that changes may be made in form and detail without departing from the spirit and scope of the claimed subject matter. For example, although different example embodiments may have been described as including one or more features providing one or in ore benefits, it is contemplated that the described features may be interchanged with one another or alternatively be combined with one another in the described example embodiments or in other alternative embodiments. Because the technology of the present disclosure is relatively complex, not all changes in the technology are foreseeable. The present disclosure described with reference to the example embodiments and set forth in the following claims is manifestly intended to be as broad as possible. For example, unless specifically otherwise noted, the claims reciting a single particular element also encompass a plurality of such particular elements.

What is claimed is:

1. A self-propelled pool cleaner for cleaning debris from a submerged surface of a swimming pool, comprising:

a. a vehicle body;

b. means for moving the vehicle body within the swimming pool;

c. a filter configured to retain debris collected from the submerged surface;

d. at least one camera positioned on or in the body for capturing an image of at least a first portion of the submerged surface; and

e. a controller (i) positioned on or in the body, (ii) in electronic communication with the at least one camera, and (iii) configured to generate at least one control signal to cause movement of the body within the swimming pool to the first portion of the submerged surface when the captured image fails to satisfy a predefined threshold.

2. A self-propelled pool cleaner according to claim **1** in which the means for moving the vehicle body comprises a propulsion mechanism selected from the group consisting of at least one jet or at least one rotatably-mounted support.

3. A self-propelled pool cleaner according to claim **2** in which the propulsion mechanism is at least one rotatably-mounted support selected from the group consisting of a wheel, a roller, a track, or a scrubbing member.

4. A self-propelled pool cleaner according to claim **1** further comprising an electric motor for driving the means for moving the vehicle body.

5. A self-propelled pool cleaner according to claim **4** in which the controller controls electric power provided to the electric motor.

6. A self-propelled pool cleaner according to claim **1** in which the controller is operable to execute a cleaning program for cleaning the submerged surface.

* * * * *

EXHIBIT E

US010338599B2

(12) **United States Patent**
Durvasula et al.

(10) **Patent No.: US 10,338,599 B2**
(45) **Date of Patent: *Jul. 2, 2019**

(54) **POOL CLEANING SYSTEM AND METHOD TO AUTOMATICALLY CLEAN SURFACES OF A POOL USING IMAGES FROM A CAMERA**

(71) Applicant: **AQUA PRODUCTS, INC.**, Cedar Grove, NJ (US)

(72) Inventors: **Kameshwar Durvasula**, Garfield, NJ (US); **William Londono Correa**, Bloomfield, NJ (US)

(73) Assignee: **Aqua Products, Inc.**, Cedar Grove, NJ (US)

(*) Notice: Subject to any disclaimer, the term of this patent is extended or adjusted under 35 U.S.C. 154(b) by 0 days.

This patent is subject to a terminal disclaimer.

(21) Appl. No.: **15/973,983**

(22) Filed: **May 8, 2018**

(65) **Prior Publication Data**

US 2018/0341272 A1 Nov. 29, 2018

Related U.S. Application Data

(63) Continuation of application No. 15/207,065, filed on Jul. 11, 2016, now Pat. No. 9,995,051, which is a (Continued)

(51) **Int. Cl.**
G05D 1/02 (2006.01)
E04H 4/16 (2006.01)
(Continued)

(52) **U.S. Cl.**
CPC ..... ***G05D 1/0246*** (2013.01); ***E04H 4/1654*** (2013.01); ***G05D 1/0016*** (2013.01); (Continued)

(58) **Field of Classification Search**
CPC .. G05D 1/0246; G05D 1/0038; G05D 1/0016; G05D 1/0033; G05D 2201/0203; (Continued)

(56) **References Cited**

U.S. PATENT DOCUMENTS

5,205,174 A 4/1993 Silverman et al.
5,435,031 A 7/1995 Minami et al.
(Continued)

FOREIGN PATENT DOCUMENTS

CN 101139007 A 3/2008
EP 0687964 A1 12/1995
(Continued)

OTHER PUBLICATIONS

Spanish Patent No. P201331047—State of Art Search Report from the ES Patent and Trademark Office; dated Feb. 3, 2015; 1 page.

Primary Examiner — Allen C Wong
(74) *Attorney, Agent, or Firm* — Abelman, Frayne & Schwab

(57) **ABSTRACT**

A pool cleaning system for cleaning debris from a submerged surface of a swimming pool includes a self-propelled pool cleaner having rotatably-mounted supports for supporting and guiding the cleaner on the pool surface; an electric motor for enabling the rotation of the rotatably-mounted supports on the pool surface; at least one camera to capture imagery of the pool surface; a controller, in electronic communication with the at least one camera, to determine a cleanliness characteristic of the pool surface on which the cleaner has passed based on the camera imagery and generate a control signal to direct movement of the cleaner based on the cleanliness characteristic of the pool surface, and a portable electronic device configured to present a graphic on a display, the graphic depicting the submerged surface of the pool and those portions of the (Continued)

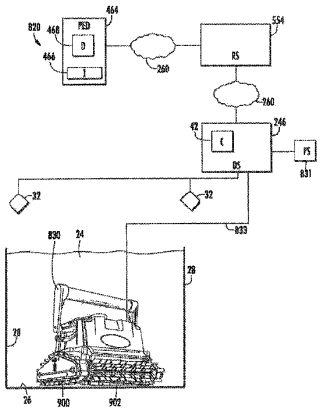

surface that remain uncleaned as the cleaner traverses the pool surface.

19 Claims, 4 Drawing Sheets

Related U.S. Application Data

continuation of application No. 13/545,918, filed on Jul. 10, 2012, now Pat. No. 9,388,595.

(51) **Int. Cl.**

H04N 7/18	(2006.01)
H04N 5/232	(2006.01)
G05D 1/00	(2006.01)
H04N 5/225	(2006.01)
G06T 7/90	(2017.01)
G06T 7/00	(2017.01)

(52) **U.S. Cl.**
CPC ***G05D 1/0033*** (2013.01); ***G05D 1/0038*** (2013.01); ***H04N 5/23203*** (2013.01); ***H04N 7/18*** (2013.01); *G05D 2201/0203* (2013.01); *G06T 7/001* (2013.01); *G06T 7/90* (2017.01); *G06T 2207/10024* (2013.01); *H04N 2005/2255* (2013.01)

(58) **Field of Classification Search**
CPC E04H 4/1654; G06T 7/90; G06T 7/001; G06T 2207/10024
USPC 348/114
See application file for complete search history.

(56) **References Cited**

U.S. PATENT DOCUMENTS

5,507,058	A	4/1996	Minami et al.	
5,613,261	A	3/1997	Kawakami et al.	
5,886,630	A	3/1999	Menoud	
7,123,746	B2	10/2006	Meniere et al.	
7,362,351	B2 *	4/2008	Meniere	G01V 8/10 348/135
7,398,138	B2	7/2008	Emery et al.	
7,993,600	B2	8/2011	Doyle et al.	
8,007,653	B2	8/2011	Porat	
8,043,070	B2	10/2011	Stiles, Jr. et al.	
2002/0097322	A1	7/2002	Monroe et al.	
2004/0025268	A1	2/2004	Porat	
2004/0040581	A1	3/2004	Bruwer	
2007/0094817	A1	5/2007	Stoltz et al.	
2010/0299016	A1	11/2010	Benzler et al.	
2011/0091329	A1	4/2011	Stiles, Jr. et al.	
2011/0290707	A1 *	12/2011	Porat	E04H 4/1281 210/96.1
2011/0301752	A1	12/2011	Finezilber	
2013/0151061	A1	6/2013	Hong	
2013/0269097	A1	10/2013	Alammari	
2014/0009748	A1	1/2014	Leonessa et al.	

FOREIGN PATENT DOCUMENTS

EP	0811432	A2	12/1997	
JP	S6162905	A	3/1986	
WO	2004019295	A1	3/2004	
WO	2009031361	A1	12/2009	
WO	2012023676	A1	2/2012	
WO	WO-2012023676	A1 *	2/2012	B08B 9/08

* cited by examiner

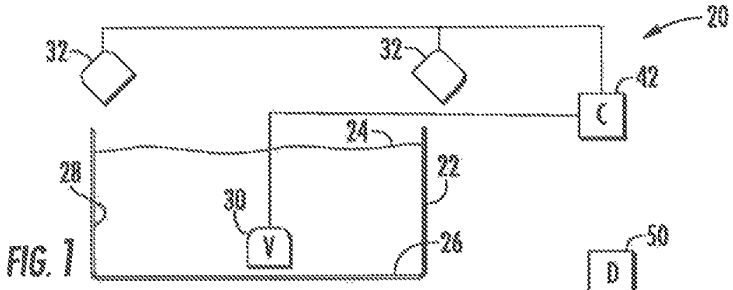

FIG. 1

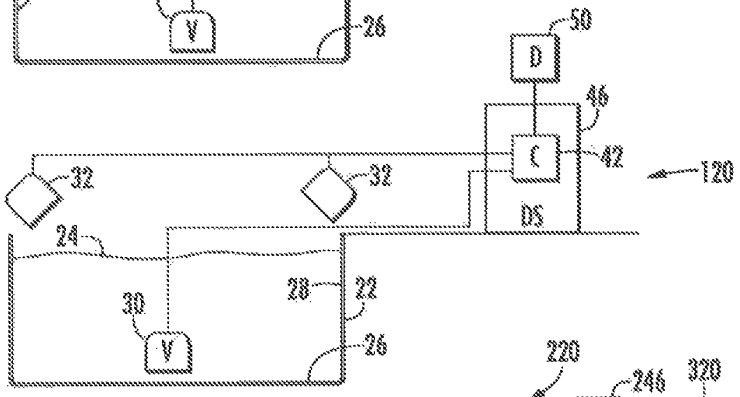

FIG. 2

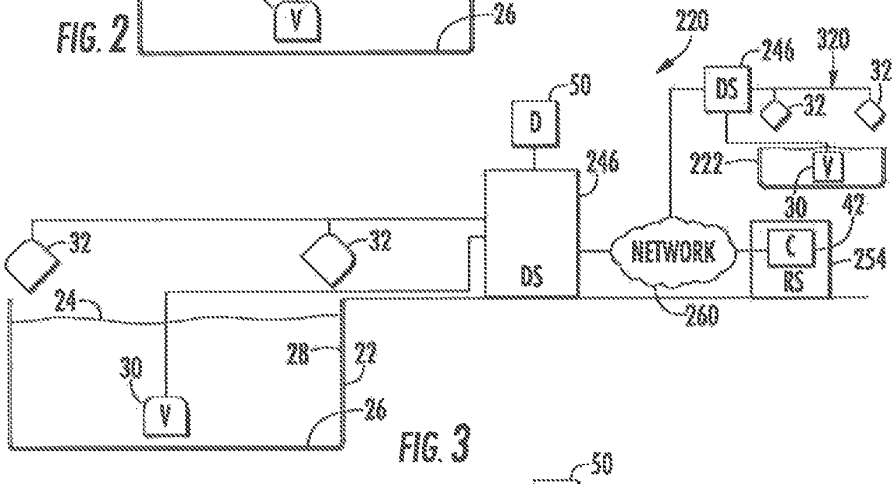

FIG. 3

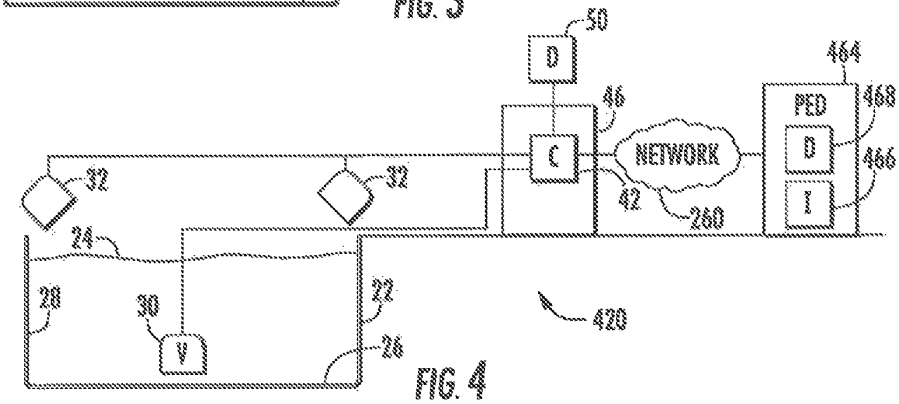

FIG. 4

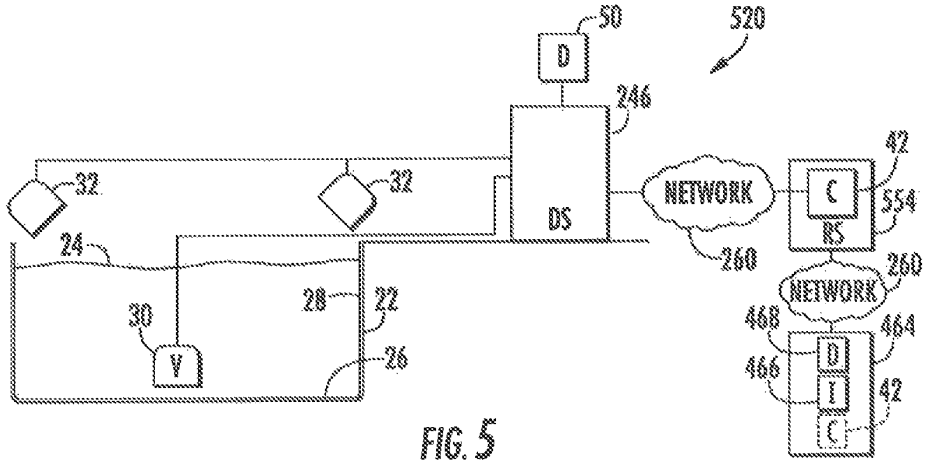

FIG. 5

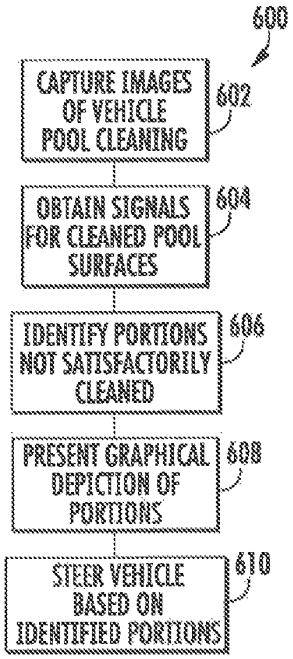

FIG. 6

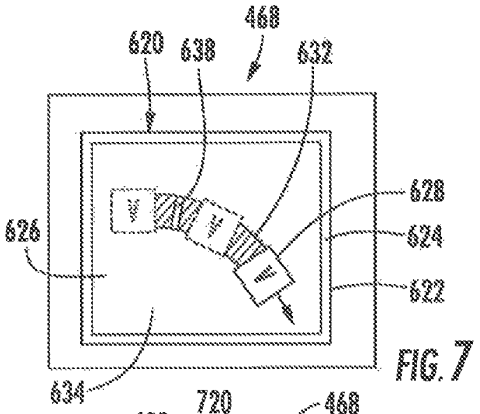

FIG. 7

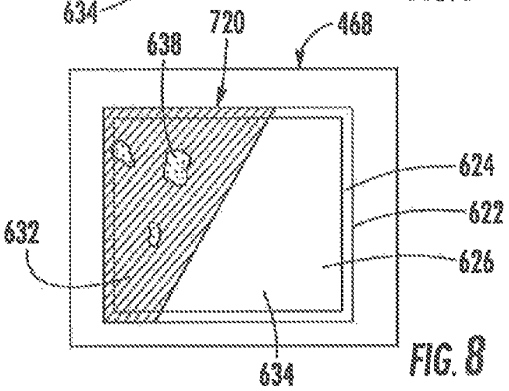

FIG. 8

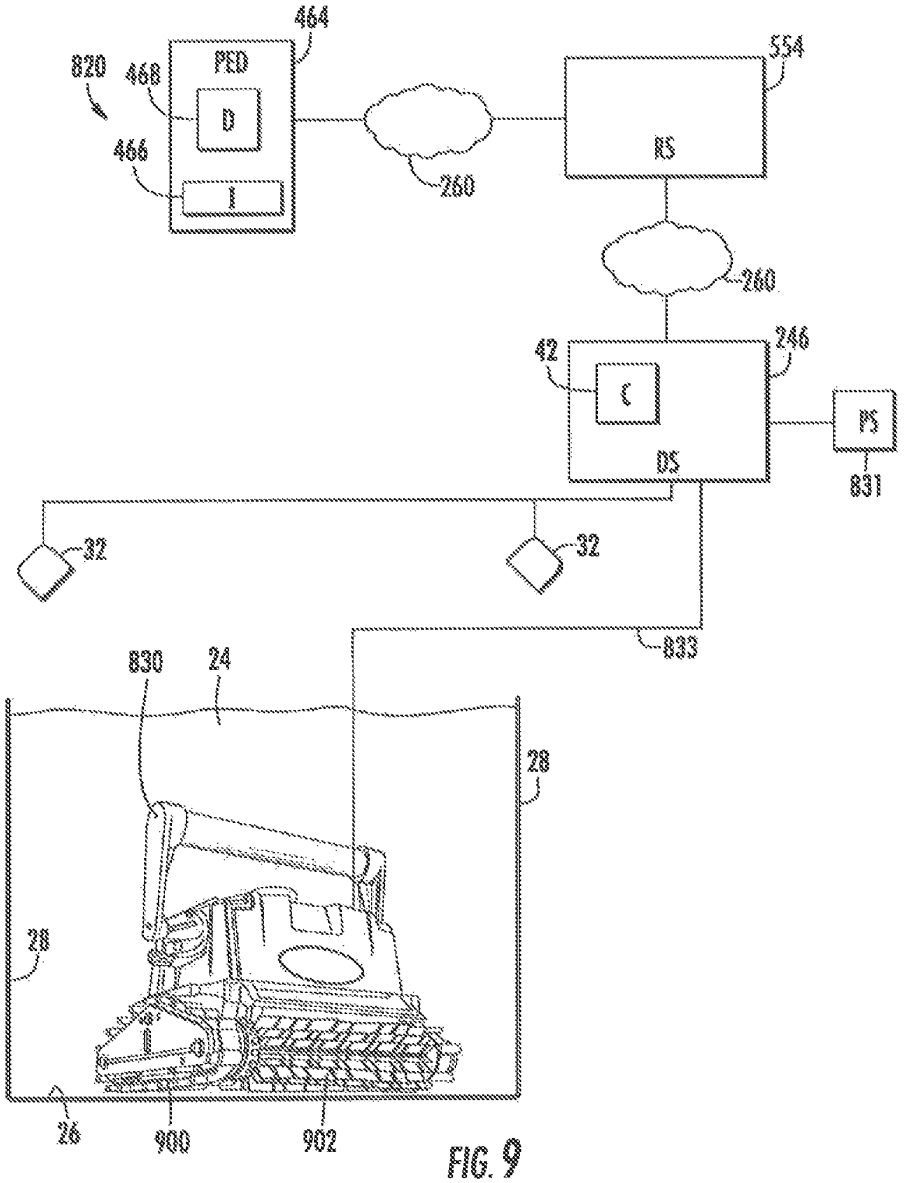
464
PED
820
468
D
466
I
260
554
RS
260
42
246
C
DS
PS
831
32
32
833
830
24
28
28
26
900
902

FIG. 9

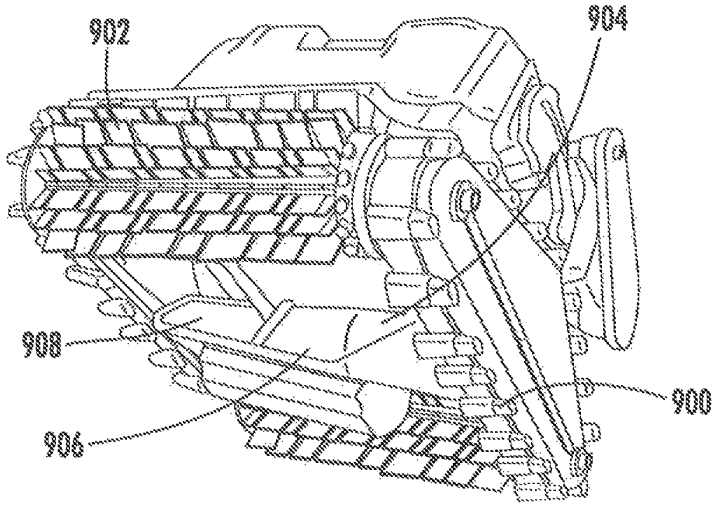

FIG. 10

POOL CLEANING SYSTEM AND METHOD TO AUTOMATICALLY CLEAN SURFACES OF A POOL USING IMAGES FROM A CAMERA

CROSS-REFERENCE TO RELATED APPLICATION

This patent application is a continuation of commonly owned U.S. patent application Ser. No. 15/207,065, filed Jul. 11, 2016, which is a continuation of U.S. patent application Ser. No. 13/545,918, filed Jul. 10, 2012 (now U.S. Pat. No. 9,388,595), the content of which are incorporated by reference herein in their entirety.

BACKGROUND

Manually cleaning the floor and sides of a swimming pool may be a tedious and time-consuming task. As a result, automated robotic pool cleaners have been developed. However, controlling and monitoring such automated robotic pool cleaners to insure that all portions of the pool surfaces are satisfactorily cleaned remains a challenge.

SUMMARY OF THE INVENTION

The disadvantages heretofore associated with the prior art are overcome by the present invention of a pool cleaning system for cleaning debris from a submerged surface of a swimming pool comprising: a self-propelled pool cleaner having rotatably-mounted supports for supporting and guiding the cleaner on the pool surface; a filter configured to retain the debris collected from the submerged surface of the swimming pool; an electric motor for enabling the rotation of the rotatably-mounted supports on the pool surface; at least one camera to capture imagery of the pool surface; a controller, in electronic communication with the at least one camera, to determine a cleanliness characteristic of the pool surface on which the cleaner has passed based on the camera imagery and generate a control signal to direct movement of the cleaner based on the cleanliness characteristic of the pool surface; and a portable electronic device is configured to present a graphic on a display, the graphic depicting the submerged surface of the pool and those portions of the surface that remain uncleaned as the cleaner traverses the pool surface.

In one aspect, the at least one camera is carried by the cleaner. In another aspect, the controller is carried by the cleaner. In still another aspect, the electric motor is mechanically connected to at least one of the rotatably-mounted supports.

In yet another aspect, the controller is operable to execute one or more cleaning programs for cleaning the submerged surfaces of the pool. In one aspect, the control signal causes the cleaner to drive in a direction to clean a portion of the pool surface based on the cleanliness characteristic of the pool surface. Alternatively, the control signal causes the cleaner to steer in a direction to clean a portion of the pool surface based on the cleanliness characteristic of the pool surface. In another aspect, the control signal causes the cleaner to drive in a direction to re-clean a portion of the pool surface over which the cleaner has passed. Alternatively, the control signal causes the cleaner to steer in a direction to re-clean a portion of the pool surface over which the cleaner has passed.

In one aspect, the captured imagery from the at least one camera is digitally processed by the controller to determine the cleanliness characteristic of the pool surface. Alternatively, the captured imagery from the at least one camera is digitally processed by a remote processor to determine the cleanliness characteristic of the pool surface.

In another aspect, the system further comprises a dry station located remotely from the cleaner and in communication with the cleaner, wherein the dry station includes the controller. Alternatively, the system further comprises a dry station located remotely from the cleaner and in communication with the cleaner, wherein the controller is located remotely from the cleaner and the dry station. In still another aspect, the controller controls electric power provided to the electric motor.

In one aspect, the control signal causes the cleaner to move in a direction of a portion of the pool surface to be cleaned based solely upon signals received from the camera. In another aspect, the control signal causes the cleaner to drive in a direction to clean a portion of the pool surface based on the cleanliness characteristic of the pool surface. Alternatively, the control signal causes the cleaner to steer in a direction to clean a portion of the pool surface based on the cleanliness characteristic of the pool surface. In yet another aspect, the control signal causes the cleaner to drive in a direction to re-clean a portion of the pool surface over which the cleaner has passed. Alternatively, the control signal causes the cleaner to steer in a direction to re-clean a portion of the pool surface over which the cleaner has passed.

BRIEF DESCRIPTION OF THE DRAWINGS

FIG. **1** is a schematic illustration of an example pool cleaning system.

FIG. **2** is a schematic illustration of an implementation of the pool cleaning system of FIG. **1**.

FIG. **3** is a schematic illustration of an implementation of the pool cleaning system of FIG. **1**.

FIG. **4** is a schematic illustration of an implementation of the pool cleaning system of FIG. **1**.

FIG. **5** is a schematic illustration of an implementation of the pool cleaning system of FIG. **1**.

FIG. **6** is a flow diagram of an example method that may be carried out with the pool cleaning system of FIG. **2-5**.

FIG. **7** is a plan view of an example display with an example graphical depiction.

FIG. **8** is a plan view of another example display with an example graphical depiction.

FIG. **9** is a schematic illustration of an implementation of the pool cleaning system of FIG. **1** with an example pool cleaning vehicle.

FIG. **10** is a bottom perspective view of the example pool cleaning vehicle of the system of FIG. **9**.

DETAILED DESCRIPTION OF THE EXAMPLE EMBODIMENTS

FIG. **1** schematically illustrates an example pool cleaning system **20**. As schematically shown by FIG. **1**, pool cleaning system **20** is adapted to clean submerged surfaces of a pool **22** containing a liquid **24**. In particular, pool cleaning system **20** is adapted to clean at least a bottom or floor surface **26** of the pool **22** and possibly to additionally clean surfaces **28** of pool **22**. As will be described hereafter, pool cleaning system facilitates the control and monitoring of a robotic pool cleaner to better assure that all portions of pool **22** are satisfactorily cleaned.

Pool cleaning system **20** comprises vehicle **30**, cameras **32** and controller **42**. Vehicle **30** comprises an automated

powered device configured to travel adjacent to submerged or water containing surfaces of pool **20** (such as floor **26** and/or side surfaces **28**) while cleaning such surfaces. In one implementation, vehicle **30** may include vacuum or suction devices, a liquid circulation system and a filter to draw debris, such as bacterial growth or plant growth, from such pool surfaces, wherein the drawn liquid containing such residue or foreign matter is filtered to collect the debris. In other implementations, vehicle **30** may not collect such debris, wherein vehicle **30** merely loosens such debris on the pool surfaces such that the loosened or separated debris may be subsequently removed using the existing liquid filtering system of pool **22**.

To assist in the loosening of debris, in one implementation, vehicle **30** may additionally include a chemical dispenser to closely apply pool cleaning chemicals to the pool surfaces as the vehicle **30** traverses such surfaces. In one implementation, vehicle **30** may additionally or alternatively include one or more scrubbing members, such as active (driven) or passive (undriven or idling) brushes, to assist in the removal of residue or foreign matter from such pool surfaces. In yet another implementation, vehicle **30** may additionally or alternatively include liquid jets to assist in the loosening of debris.

To move along the submerged surfaces of pool **22**, vehicle **30** includes one or more propulsion mechanisms. In one implementation, vehicle **30** is propelled along the submerged pool surfaces using wheels, rollers, tracks or other surface contacting members powered by a motor and the like. Such wheels, rollers or tracks may themselves include the scrubbing members used to clean the surfaces. In one implementation vehicle **30** may also alternatively be propelled by means of the vacuum or liquid jets. The vacuum or liquid jets used for such propulsion nozzle facilitate loosening of debris for collection by vehicle **30**. In other implementations, vehicle **30** may include other propulsion mechanisms.

Cameras **32** comprise devices configured to capture video or time lapse images of pool **22**. In the example illustrated, cameras **32** are mounted on structures external to pool **22**. In other words, cameras **32** are not submerged. In other implementations, cameras **32** may alternatively be mounted to vehicle **30**. In the example illustrated, cameras **32** capture movement of vehicle **30** while vehicle **30** is submerged within pool **22**. In other implementations, cameras **32** merely capture images of submerged surfaces **26**, **28** of pool **22**.

In the example illustrated, cameras **32** comprise cameras serving as part of a home or pool security system, wherein such cameras detect the presence of a person at pool **22** satisfying a predefined characteristic and wherein an alert is output upon the person's detected presence. For example, in one implementation, cameras **32** are utilized as part of a security system that detects when a person below a predefined age, such as a child, is present at pool **22** without a detected presence of a recognized adult. In another implementation, cameras **32** may detect the presence of an unauthorized person or intruder at pool **22**. Identification of the person may be achieved by an off-site human or computerized monitoring system, wherein signals from cameras **32** are transmitted across a wide area network or may be achieved with software of controller **42** which includes facial recognition or other identification programming.

Because pool cleaning system **20** utilizes pre-existing cameras **32** provided as part of a security system or shares the use of cameras **32** with such a home or pool security system, pool cleaning system **20** is easier to set up, less complex and less expensive. In other implementations, pool cleaning system **20** may utilize dedicated cameras **22** independent of any cameras associated with a home, facility or pool security system. In such an alternative system, cameras **32** may be more precisely focused upon pool **22** and surfaces **26**, **28** while also including appropriate lenses or modifications to account for glare, refraction and the like to better facilitate the capture of surfaces and vehicle **30** which are submerged.

Controller **42** comprises one or more processing units in communication with vehicle **30** and cameras **32**. For purposes of this application, the term "processing unit" shall mean a presently developed or future developed processing unit that executes sequences of instructions contained in a memory. Execution of the sequences of instructions causes the processing unit to perform steps such as generating control signals. The instructions may be loaded in a random access memory (RAM) for execution by the processing unit from a read only memory (ROM), a mass storage device, or some other persistent storage. In other embodiments, hard wired circuitry may be used in place of or in combination with software instructions to implement the functions described. For example, controller **42** may be embodied as part of one or more application-specific integrated circuits (ASICs). Unless otherwise specifically noted, the controller is not limited to any specific combination of hardware circuitry and software, nor to any particular source for the instructions executed by the processing unit.

In one implementation, controller **42** communicates with vehicle **30** and cameras **32** entirely across a wired connection. In another implementation, controller **42** communicates with vehicle **30** and cameras **32** across a wireless connection, such as cross a local area network (LAN) or a wide area network (WAN) such as the Internet. One of limitation, controller **42** may communicate with vehicle **30** and cameras **32** using a combination of both wired and wireless communication connections.

Controller **42** is configured to generate control signals for steering vehicle **30** based upon signals received from cameras **32**. In one implementation, controller **42** provides the sole steering directions for vehicle **30** using signals from cameras **32**. Because vehicle **30** is precisely steered under the control of controller **42**, rather than traveling in a random manner, entire summer surfaces of pool **22** may be more quickly and efficiently covered and cleaned. Because controller **42** provides the only steering instructions for vehicle **30** and utilizes signals from cameras **32**, complex steering algorithms or codes in either vehicle **30** or controller **42** may be omitted to reduce complexity and cost of system **20**.

In another implementation, vehicle **30** may cover or travel across surfaces of pool **22** in either a random fashion or according to an automated pool coverage algorithm or pool coverage pattern stored in a memory associated with vehicle **30** or controller **42**. In such an implementation, controller **42** utilizes signals from cameras **32** to verify that all of the surfaces of pool **22** have been cleaned, that no spots have been missed. Upon identifying a missed spot, controller **42** utilizes signals from camera **32** to steer vehicle **32** over such missed portions of surfaces **26**, **28**. According to one example, controller **42** not only uses signals from camera **32** to determine whether any portions of surfaces **26**, **28** have been missed entirely, but to also determine whether any portions of surfaces **26**,**28** have been cleaned, but not to a satisfactory degree or extent. In such circumstances, controller **42** uses signals from cameras **32** to steer vehicle **34** such areas to re-clean such portions until such portions have

been satisfactorily cleaned such that the portions have a cleanliness characteristic satisfying a predefined threshold.

FIG. **2** schematically illustrates pool cleaning system **120**, the particular example of pool cleaning system **20** described above. Pool cleaning system **120** is similar to pool cleaning system **20** except that pool cleaning system **120** additionally comprises dry station **46** and display **50**. Those remaining components of pool cleaning system **120** which correspond to components of pool cleaning system **20** are numbered similarly.

Dry station **46** comprises a station in communication with vehicle **30** and cameras **32** outside of pool **22**. Dry station **46** incorporates controller **42**. In one implementation, dry station **46** communicates with vehicle **30** in a wired fashion. In such an implementation, dry station **46** further provides electrical power to vehicle **30** in a wired fashion. Dry station **46** communicates with cameras **32** and either a wired or wireless fashion.

Display **50** comprises a device to present a graphical images and text on a display screen. In one implementation, display **58** may be incorporated as part of dry station **46**. In another implementation, display **50** may be provided on a portable electronic device, a computer, a television and the like. Display **50** is utilized by pool cleaning system **120** to present information regarding the cleaning of pool **22** to facilitate control of vehicle **30** by controller **42**. In one implementation, display **50** is utilized by pool cleaning system **120** and a controller **42** to present a graphical depiction of those portions of surfaces **26**, **28** of pool **22** have not been satisfactorily cleaned so as to satisfy a predefined cleanliness characteristic threshold. Such portions may comprise portions that have been completely missed by vehicle **30** as well as those portions that have been covered by vehicle **30** but have not been satisfactorily cleaned with the given number of passes of vehicle **30** or the existing cleaning settings of vehicle **30**. The graphical depiction presented on display **50** enables a person view the quality of the prior cleaning session and to input commands causing controller **42** to generate control signals using signals from camera **32** to steer vehicle **30** back to such identified portions where such portions may be cleaned at the same or elevated cleaning aggressiveness settings.

Another implementation, display **50** may be further utilized by controller **42** to depict the progress of vehicle **30** in cleaning pool **22**. Such a display **50** allows a person to visually determine how much of the pool has been currently cleaned and to estimate the remaining time before the pool cleaning task is completed. In certain circumstances, using display **50**, a person may adjust a setting of vehicle **30** to accelerate a rate at which surfaces **26**, **20** of pool **22** are cleaned to meet an earlier desired completion time for such pool cleaning.

FIG. **3** schematically illustrates pool cleaning system **220**, another example implementation of pool cleaning system **20**. Pool cleaning system **220** is similar to pool cleaning system **20** except that pool cleaning system **220** additionally comprises dry station **246**, display **50**, and remote server **254**. Those remaining components of pool cleaning system **220** which correspond to components of pool cleaning system **20** or pool cleaning system **120** are numbered similarly.

Dry station **246** is similar to dry station **46**, described above, except that dry station **246** serves as a local interface for communication with controller **42** across a network **260**. In one implementation, network **260** may comprise a local area network. In another implementation, network **260** may comprise a wide area network, such as the Internet. For example, in one implementation, dry station **246** may incorporate a modem. In one implementation, dry station **246** may communicate across a local area network to controller **42**. In another implementation, dry station **246** may communicate through a router, across a local area network, to a local modem which communicates across a network **260**. The example illustrated, dry station **246** further provides part of vehicle **30** across a wired cable or wired connection. Display **50** is described above with respect to system **120**.

Remote server **254** comprises a server remote from dry station **246** which is in communication with dry station **246** across network **260**. Remote server **254** includes controller **42**. During operation, signals from cameras **32** are transmitted across dry station **246** across network **260** to controller **42** of remote server **254**. Based upon such signals from cameras **32**, controller **42** generates control signals which are transmitted back across network **260** and through dry station **246** to vehicle **30** to steer vehicle **30**.

As shown by FIG. **3**, remote server **254** and network **260** may be shared as part of other pool cleaning systems **320**, wherein controller **42** generates control signals for steering the pool cleaning vehicle **30** of system **320** based upon signals from cameras **32** transmitted across dry station **246** of system **320**. In such an implementation, the cost and complexity of pool cleaning system **220** is reduced since controller **42** is remotely provided at remote server **254** which services multiple pool cleaning systems **220**,**320**. Upgrades to controller **42** and its software are also more easily achieved for all pool cleaning systems to **20**, **320** and their pools **22**, **222** being serviced. In one implementation, the supervised cleaning, inspection and possible re-cleaning facilitated by the use of cameras **32** may be provided as part of a subscription to users of vehicle **30**. In such an implementation, a pool **22** having security cameras **32** may be upgraded with appropriate software or an appropriate software module added to dry station **246** to make a network connection with controller **42** which directs the security cameras **32** to capture vehicle **30** utilizes such signals for steering vehicle **30**.

FIG. **4** schematically illustrates pool cleaning system **420**, another particular implementation of pool cleaning system **20**. Pool cleaning system **420** is similar to pool cleaning system **120** except that pool cleaning system **420** additionally comprises a portable electronic device **464**. Those remaining components of pool cleaning system **420** which correspond to components of pool cleaning system **120** are numbered similarly.

Portable electronic device **464** comprises a portable handheld electronic device in communication with controller **42** and/or dry station **46** across network **260**. Examples of such a portable electronic device (PED) **300** include, but are not limited to, a smart phone, a personal data assistant (PDA), laptop, notebook computer, tablet computer (e.g. IPAD) and MP3 player (e.g., IPOD TOUCH). In the example illustrated, PED **464** comprises input **466** and display **468**.

Input **466** serves as a user interface for PED **464** by which inputs are made to PEI) **464**. Input **466** facilitates entry of inputs or commands by a person to cause controller **42** to generate control signals varying the control of vehicle **30**. In one implementation, input **466** comprise a keyboard. In other implementations, input **466** may comprise a touchpad, a stylus, a microphone with associated speech recognition software or programming, a touch screen, buttons, switches and the like. In some implementations, input **466** may comprise a touch screen incorporated as part of display **468**.

Display **468** comprises a user interface by which graphical or textual data is presented to a user. Display **468** may

present the same or similar information as presented at dry station **246** by display **50** as described above. In one implementation, display **468** comprises a liquid crystal display. In other implementations, display **468** may comprise other types of display technology such as a light emitting diode display, an organic light emitting diode display (OLED), an electronic ink (e-ink) display or other types of display technology in present use or developed in the future. Although system **420** is illustrated as including controller **422** is part of dry station **46**, in some implementations, controller **42** may alternatively be located as part of PEI) **464**.

PED **464** enables a person located remote from pool **22** to monitor the progress of the cleaning of pool **22** by vehicle **30** of system **420**. PEI) **464** provides a person with a graphical presentation (described above with respect to display **50**) indicating those portions of surfaces **26**, **28** of pool **22** that have been completed as well as those portions **26**, **20** and that remain to be cleaned. The person may also be provided with a graphical indication of what portions need to be re-cleaned to meet predetermined cleanliness thresholds. In the example illustrated, input **466** enables a person to enter commands or selections which are transmitted across network **260** to controller **42** to adjust operation of vehicle **30**. For example, the path or route of vehicle **30** may be changed, the aggressiveness of the cleaning chemicals or mechanical cleaning devices may be adjusted, the speed at which vehicle **30** traverses surfaces **26**, **28** may be adjusted. In response to such adjustment signals from PED **464**, controller **42** may utilize signals from cameras **32** to adjust the steering of vehicle **30**.

FIG. **5** schematically illustrates pool cleaning system **520**, another example implementation of pool cleaning system **20**. Pool cleaning system **520** is similar to pool cleaning system **420** except that pool cleaning system **520** additionally comprises a remote server **554**. Those remaining components of pool cleaning system **520** which correspond to components of pool cleaning system **420** are numbered similarly.

Remote server **554** is similar to remote server **254** described above with respect to system **220**. Remote server **554** comprises a server remote from dry station **246** which is in communication with dry station **246** across network **260**. Remote server **254** includes controller **42**. During operation, signals from cameras **32** are transmitted across dry station **246** across network **260** to controller **42** of remote server **254**. Based upon such signals from cameras **32**, controller **42** generates control signals which are transmitted back across network **260** and through dry station **246** to vehicle **30** to steer vehicle **30**. Controller **42** further relays either the raw signals from camera **32** or image signals generated based upon signals from cameras **32** to PEI) **464**, wherein such images (described above) are presented on display **468**. As noted above, PED may further receive commands through input **466**, wherein such commands are transmitted to controller **42** which generates control signals that are ultimately transmitted to vehicle **30** for steering vehicle **30**.

As with remote server **254**, remote server **554** and network **260** may be shared as part of other pool cleaning systems **320** (shown in FIG. **3**), wherein controller **42** generates control signals for steering the pool cleaning vehicle **30** of system **320** based upon signals from cameras **32** transmitted across dry station **246** of system **320**. In such implementations, controller **42** of remote server **554** may interact with other PEDs **464**. In such an implementation, the cost and complexity of pool cleaning system **220** is reduced since controller **42** is remotely provided at remote server **254** which services multiple pool cleaning systems **220**, **320**. Upgrades to controller **42** and its software are also more easily achieved for all pool cleaning systems to **20**, **320** and their pools **22**, **222** being serviced. In one implementation, the supervised cleaning, inspection and possible re-cleaning facilitated by the use of cameras **32** may be provided as part of a subscription to users of vehicle **30**. In such an implementation, a pool **22** having security cameras **32** may be upgraded with appropriate software or an appropriate software module added to dry station **246** to make a network connection with controller **42** which directs the security cameras **32** to capture vehicle **30** utilizes such signals for steering vehicle **30**. As indicated by broken lines, in other implementations, the controller **42** for generating control signals steering vehicle **30** based upon signals from cameras **32** may alternatively be relocated in PED **464**.

FIG. **6** is a flow diagram illustrating an example method **600** that may be carried out by any of systems **120-520**. As indicated by step **602**, cameras **32** capture images of pool cleaning by vehicle **30**. As indicated by step **604**, controller **42** obtain such signals from cameras **32** for the surfaces of pool **22** that have been cleaned. As indicated by step **606**, controller **42** uses information gathered from the signals from cameras **32** to identify those portions of surfaces **26**, **28** not satisfactorily cleaned—not satisfying a predefined cleanliness characteristic or measurement threshold. One example of a cleanliness characteristic measurement a threshold may be how well the color of a surface matches a predetermined desirable color for the pool surface (such as original color of the tile or surface). A surface that has been missed entirely by vehicle **30** during a pool cleaning session may be automatically deemed to not satisfy a predetermined cleanliness characteristic.

As indicated by step **608**, based upon such determinations, controller **42** generates control signals resulting in the presentation of a graphical depiction of those portions of pool **22** that has not been satisfactorily cleaned. Such graphical representations or depictions may be presented on display **50** or display **468**. FIGS. **7** and **8** illustrate examples of graphical depictions that may be presented.

FIG. **7** illustrates display **468** presenting graphical depiction **620**. Graphical depiction **620** comprises a first graphic **622** having a first portion **624** representing sides or walls **28** of pool **22** and a second portion **626** representing the floor **26** of pool **22**. Graphical depiction **620** further comprises a moving icon **628** representing the current positioning of vehicle **30**. In one implementation, the path of vehicle **30** may additionally be depicted by icon **628** shown in broken lines. As shown by FIG. **7**, those portions **632** of surfaces **26**, **28** of pool **22** (shown in FIG. **1**) over which of vehicle **30** has moved are identified by graphical depiction **620** either by color, markings or other various distinctive attributes. Likewise, those portions **634** of surfaces **26**, **28** of pool **22** that have not been covered by vehicle **30** are identified by a distinct color col marking or distinctive attribute of depiction **620**. As a result, a person may view the current position of vehicle **30**, the extent to which pool **22** has been cleaned or covered by vehicle **30** and the extent of pool **22** that remains to be cleaned. In the example illustrated, depiction **620** further identifies those portions **638** of surfaces **26**, **28** that have been cleaned, but which have not been cleaned to a satisfactory degree or extent. In one implementation, portions **638** may be identified by colors, brightness, markings or other visually distinctive attributes that are visually distinct from both portions **632** and portions **634**. In other implementations, portions **638** may have the same charac-

teristic of portions **634**. In yet other implementations, different portions **638** may have different visual attributes depending upon a degree to which such clean portions have failed to satisfy the predefined cleanliness characteristic threshold. In some implementations, different port **638** may have different visual attributes depending upon different cleaning strategies that may be recommended for the different portions **638**. For example, controller **42** may determine and recommend a first cleaning strategy (a first chemical solution jetted at a first rate and scrubbed at a first rate) with respect to a first portion **638** and may recommend a second different cleaning strategy (a second chemical solution jetted at a second rate is about a second rate) with respect to a second portion **638**, wherein the different cleaning strategies are represented by different visual attributes presented in depiction **620**.

FIG. **8** illustrates display **468** presenting a graphical depiction **720**. Graphical depiction **720** comprises a first graphic **622** having a first portion **624** representing sides or walls **28** of pool **22** and a second portion **626** representing the floor **26** of pool **22** (shown in FIG. **1**). Graphical depiction **720** is similar to graphical depiction **620** except that graphical depiction **720** omits icon **628** presenting vehicle **30**. Like depiction **620**, depiction **720** graphically depicts those portions **632** of surfaces **26**, **28** over which vehicle **30** has traveled while in a cleaning mode. Depiction **720** also visually depicts those portions **634** that have not been covered by vehicle **30** in the cleaning mode and those portions **638** over which vehicle **30** has traveled while in the cleaning mode, but which have not been cleaned to a satisfactory degree. As illustrated in FIG. **8**, different portions **638** may be visibly distinguished from one another through color, text or markings indicating either differences in the cleanliness of such portions **638** or indicating different recommended cleaning strategies or approaches that may be selected by a person using input **466** when vehicle **30** is steered back to such portions **638** for re-cleaning using signals from camera **32**.

As indicated by step **610** of FIG. **6**, controller **42** generates control signals steering vehicle **30** to re-clean portions of pool **22**, such as portions **638**. Such steering may be facilitated by using signals from cameras **32**. As noted above, in some implementations, a person may be allowed choose a cleaning approach for a particular portion **638** using input **466**. The selection may be facilitated by visual inspection of the different visual attributes for the particular portion **638** provided by depiction **720** (or depiction **620**). In some implementations, input **466** may additionally be utilized by a person to prioritize an order in which portions **638** are re-cleaned.

FIG. **9** illustrates pool cleaning system **820**, an example implementation of pool cleaning system **20**. Pool cleaning system **820** is similar to pool cleaning system **520** except the pool cleaning system **820** located controller **42** in dry station **246** and includes pool cleaning vehicle **830**, a specific example of vehicle **30**. As shown by FIG. **9**, in addition to transmitting control signals generated by controller **42** to vehicle **830**, dry station **246** further transmits power from power source **831** through a power line or power cable **833** to vehicle **830**. In the example illustrated, data communication and communication of control signals, also occurs across wired connections within or alongside the same line **833**. In the example illustrated, remote server **554** serves as a communication link by which upgrades to controller **42** may be implemented across a wide number of pool cleaning systems and by which information from controller **42** is conveyed to one or more portable electronic devices **464** across network **260**.

Vehicle **830** comprises a robotic or automated pool cleaning device. Vehicle **830** comprises a self-contained onboard filtration system with drive and pump motors. Vehicle **830** utilizes an internal microprocessor guided drive motor to systematically clean surfaces of pool **22**. As shown by FIGS. **9** and **10**, vehicle **830** utilizes a toothed track drive **900** provide traction and propulsion for vehicle **30**. Vehicle **830** comprises rotating brushes **902** to loosen waterline buildup and breakdown large debris while power washing jets **904** flush out dirt from pores, seems in corners where brushes **902** may not be able to reach. The loosened dirt and debris is vacuumed through off-center vacuum ports **906** which passes the vacuumed debris through internally house filter bag. In the example illustrated, vehicle **830** further comprises rollers **908** which inhibit vehicle **830** from becoming impeded or stuck on raised drains or pop-up heads. Although illustrated as being employed with system **820**, vehicle **830** may also be utilized with any of systems **20**, **120**, **220**, **320** and **420**. In other implementations, other robotic or automated pool cleaning vehicles may be utilized.

Although the present disclosure has been described with reference to example embodiments, workers skilled in the art will recognize that changes may be made in form and detail without departing from the spirit and scope of the claimed subject matter. For example, although different example embodiments may have been described as including one or more features providing one or more benefits, it is contemplated that the described features may be interchanged with one another or alternatively be combined with one another in the described example embodiments or in other alternative embodiments. Because the technology of the present disclosure is relatively complex, not all changes in the technology are foreseeable. The present disclosure described with reference to the example embodiments and set forth in the following claims is manifestly intended to be as broad as possible. For example, unless specifically otherwise noted, the claims reciting a single particular element also encompass a plurality of such particular elements.

What is claimed is:

1. A pool cleaning system for cleaning debris from a submerged surface of a swimming pool comprising:

a self-propelled pool cleaner having rotatably-mounted supports for supporting and guiding the cleaner on the pool surface;

a filter configured to retain the debris collected from the submerged surface of the swimming pool;

an electric motor for enabling the rotation of the rotatably-mounted supports on the pool surface;

at least one camera to capture imagery of the pool surface;

a controller, in electronic communication with the at least one camera, to determine a cleanliness characteristic of the pool surface on which the cleaner has passed based on the camera imagery and generate a control signal to direct movement of the cleaner based on the cleanliness characteristic of the pool surface; and

a portable electronic device configured to present a graphic on a display, the graphic depicting the submerged surface of the pool and those portions of the surface that remain uncleaned as the cleaner traverses the pool surface.

2. The system of claim **1**, wherein the at least one camera is carried by the cleaner.

3. The system of claim **1**, wherein the controller is carried by the cleaner.

4. The system of claim **1**, wherein the electric motor is mechanically connected to at least one of the rotatably-mounted supports.

5. The system of claim **1**, wherein the controller is operable to execute one or more cleaning programs for cleaning the submerged surfaces of the pool.

6. The system of claim **5**, wherein the control signal causes the cleaner to drive in a direction to clean a portion of the pool surface based on the cleanliness characteristic of the pool surface.

7. The system of claim **5**, wherein the control signal causes the cleaner to steer in a direction to clean a portion of the pool surface based on the cleanliness characteristic of the pool surface.

8. The system of claim **5**, wherein the control signal causes the cleaner to drive in a direction to re-clean a portion of the pool surface over which the cleaner has passed.

9. The system of claim **5**, wherein the control signal causes the cleaner to steer in a direction to re-clean a portion of the pool surface over which the cleaner has passed.

10. The system of claim **1**, wherein the captured imagery from the at least one camera is digitally processed by the controller to determine the cleanliness characteristic of the pool surface.

11. The system of claim **1**, wherein the captured imagery from the at least one camera is digitally processed by a remote processor to determine the cleanliness characteristic of the pool surface.

12. The system of claim **1** further comprising a dry station located remotely from the cleaner and in communication with the cleaner, wherein the dry station includes the controller.

13. The system of claim **1** further comprising a dry station located remotely from the cleaner and in communication with the cleaner, wherein the controller is located remotely from the cleaner and the dry station.

14. The system of claim **1**, wherein the controller controls electric power provided to the electric motor.

15. The system of claim **1**, wherein the control signal causes the cleaner to move in a direction of a portion of the pool surface to be cleaned based solely upon signals received from the camera.

16. The system of claim **15**, wherein the control signal causes the cleaner to drive in a direction to clean a portion of the pool surface based on the cleanliness characteristic of the pool surface.

17. The system of claim **15**, wherein the control signal causes the cleaner to steer in a direction to clean a portion of the pool surface based on the cleanliness characteristic of the pool surface.

18. The system of claim **15**, wherein the control signal causes the cleaner to drive in a direction to re-clean a portion of the pool surface over which the cleaner has passed.

19. The system of claim **15**, wherein the control signal causes the cleaner to steer in a direction to re-clean a portion of the pool surface over which the cleaner has passed.

* * * * *

EXHIBIT F

US009995051B2

(12) **United States Patent**
Durvasula et al.

(10) **Patent No.: US 9,995,051 B2**
(45) **Date of Patent: *Jun. 12, 2018**

(54) **POOL CLEANING SYSTEM AND METHOD TO AUTOMATICALLY CLEAN SURFACES OF A POOL USING IMAGES FROM A CAMERA**

(71) Applicant: **AQUA PRODUCTS, INC.**, Cedar Grove, NJ (US)

(72) Inventors: **Kameshwar Durvasula**, Garfield, NJ (US); **William Londono Correa**, Bloomfield, NJ (US)

(73) Assignee: **Aqua Products, Inc.**, Cedar Grove, NJ (US)

(*) Notice: Subject to any disclaimer, the term of this patent is extended or adjusted under 35 U.S.C. 154(b) by 47 days.

This patent is subject to a terminal disclaimer.

(21) Appl. No.: **15/207,065**

(22) Filed: **Jul. 11, 2016**

(65) **Prior Publication Data**

US 2016/0319559 A1 Nov. 3, 2016

Related U.S. Application Data

(63) Continuation of application No. 13/545,918, filed on Jul. 10, 2012, now Pat. No. 9,388,595.

(51) **Int. Cl.**
H04N 7/18 (2006.01)
E04H 4/16 (2006.01)
(Continued)

(52) **U.S. Cl.**
CPC ***E04H 4/1654*** (2013.01); ***H04N 5/23203*** (2013.01); ***H04N 7/18*** (2013.01); *H04N 2005/2255* (2013.01)

(58) **Field of Classification Search**
CPC E04H 4/1654; H04N 5/23203; H04N 7/18; H04N 2005/2255
(Continued)

(56) **References Cited**

U.S. PATENT DOCUMENTS

5,205,174 A 4/1993 Silverman et al.
5,435,031 A 7/1995 Minami et al.
(Continued)

FOREIGN PATENT DOCUMENTS

CN 101139007 A 3/2008
EP 0687964 A1 12/1995
(Continued)

OTHER PUBLICATIONS

Spanish Patent No. P201331047—State of Art Search Report from the ES Patent and Trademark Office; dated Feb. 3, 2015; 1 page.

Primary Examiner — Allen Wong
(74) *Attorney, Agent, or Firm* — Abelman, Frayne & Schwab

(57) **ABSTRACT**

A pool cleaning system for cleaning debris from a submerged surface of a swimming pool includes a self-propelled pool cleaner having rotatably-mounted supports for supporting and guiding the cleaner on the pool surface; an electric motor for enabling the rotation of the rotatably-mounted supports on the pool surface; at least one camera to capture imagery of the pool surface; a controller, in electronic communication with the at least one camera, to determine a cleanliness characteristic of the pool surface on which the cleaner has passed based on the camera imagery and generate a control signal to direct movement of the cleaner based on the cleanliness characteristic of the pool surface, wherein the control signal directs movement of the cleaner to reclean a portion of the pool surface where the cleanliness characteristic fails to satisfy a predefined threshold.

22 Claims, 4 Drawing Sheets

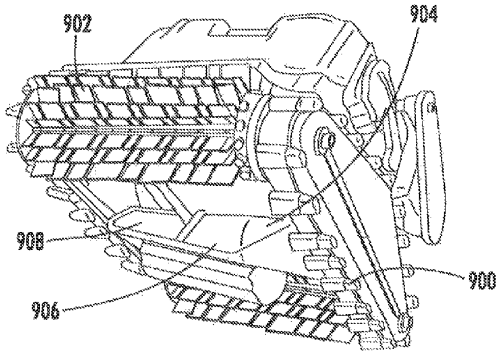

(51) **Int. Cl.**
H04N 5/232 (2006.01)
H04N 5/225 (2006.01)

(58) **Field of Classification Search**
USPC 348/114
See application file for complete search history.

(56) **References Cited**

U.S. PATENT DOCUMENTS

5,507,058	A	4/1996	Minami et al.	
5,613,261	A	3/1997	Kawakami et al.	
5,886,630	A	3/1999	Menoud	
7,123,746	B2 *	10/2006	Meniere	G01V 8/10 345/419
7,362,351	B2	4/2008	Meniere et al.	
7,398,138	B2	7/2008	Emery et al.	
7,993,600	B2	8/2011	Doyle et al.	
8,007,653	B2	8/2011	Porat	
8,043,070	B2	10/2011	Stiles, Jr. et al.	
2002/0097322	A1	7/2002	Monroe et al.	
2004/0025268	A1	2/2004	Porat	
2004/0040581	A1	3/2004	Bruwer	
2007/0094817	A1	5/2007	Stoltz et al.	
2010/0299016	A1	11/2010	Benzler et al.	
2011/0091329	A1	4/2011	Stiles, Jr. et al.	
2011/0290707	A1 *	12/2011	Porat	E04H 4/1281 210/96.1
2011/0301752	A1	12/2011	Finezilber	
2013/0151061	A1	6/2013	Hong	
2013/0269097	A1	10/2013	Alammari	
2014/0009748	A1	1/2014	Leonessa et al.	

FOREIGN PATENT DOCUMENTS

EP	0811432	A2	12/1997	
JP	S6162905	A	3/1986	
WO	2004019295	A1	3/2004	
WO	2009031361	A1	12/2009	
WO	2012023676	A1	2/2012	
WO	WO 2012/023676	A1 *	2/2012	E02F 3/8866
WO	WO-2012/023676	A1	2/2012	

* cited by examiner

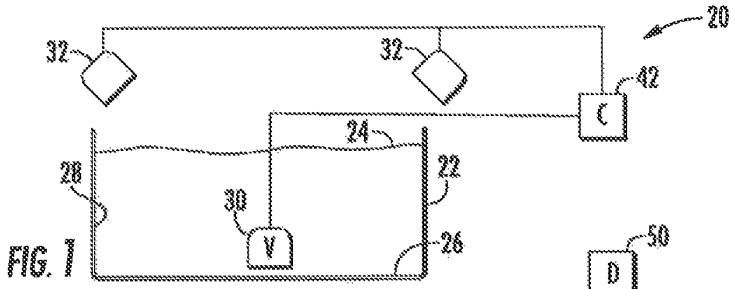

FIG. 1

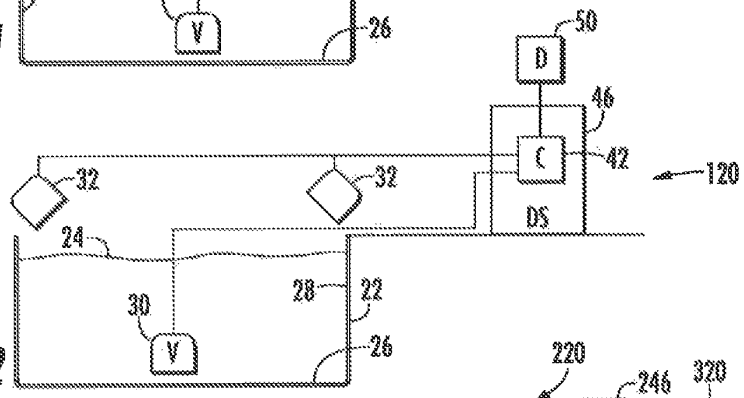

FIG. 2

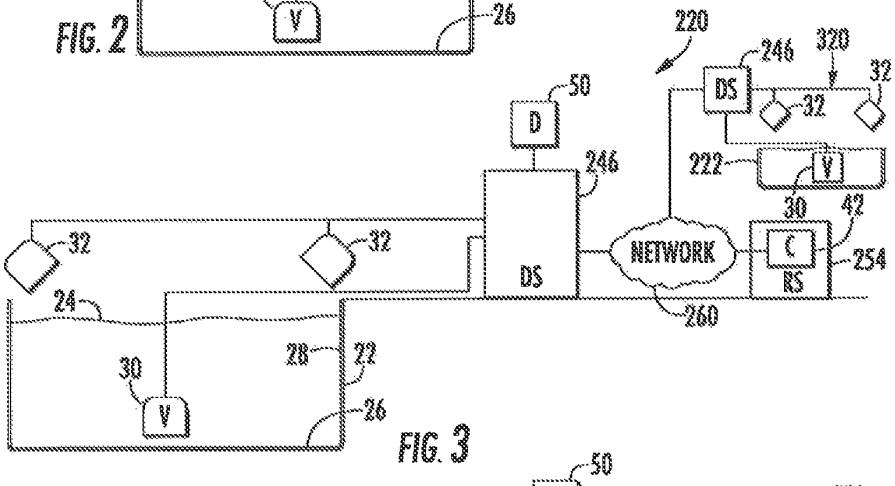

FIG. 3

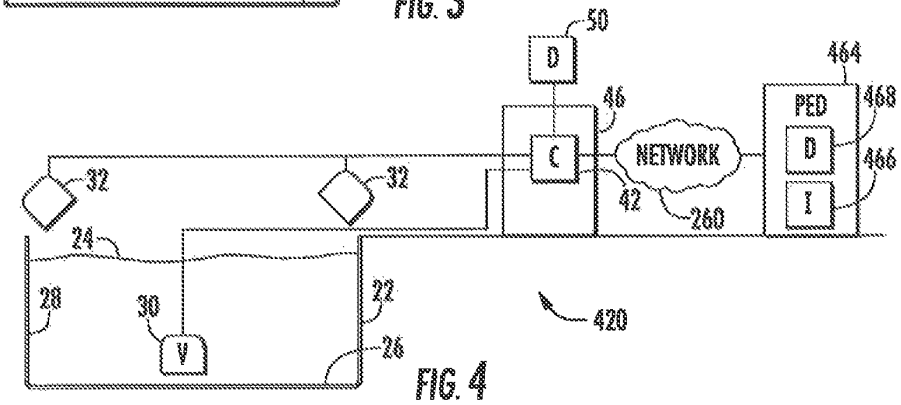

FIG. 4

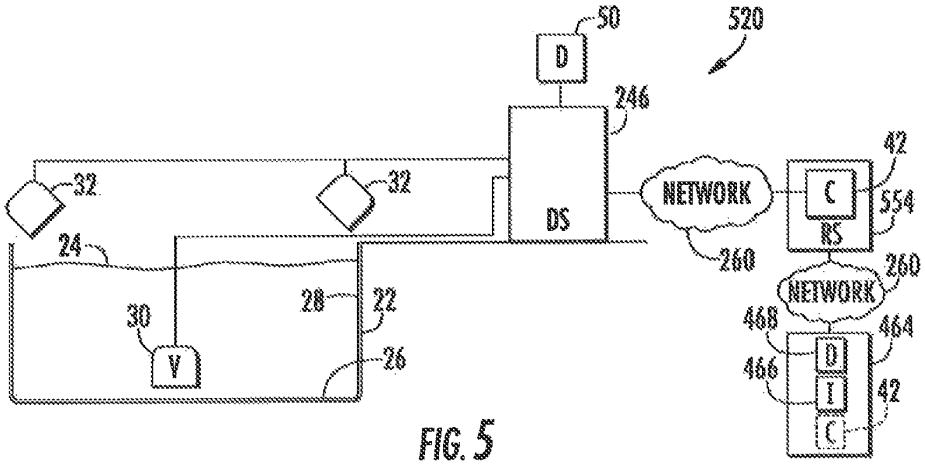

FIG. 5

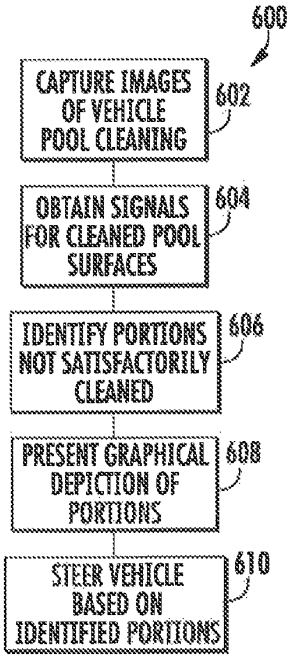

FIG. 6

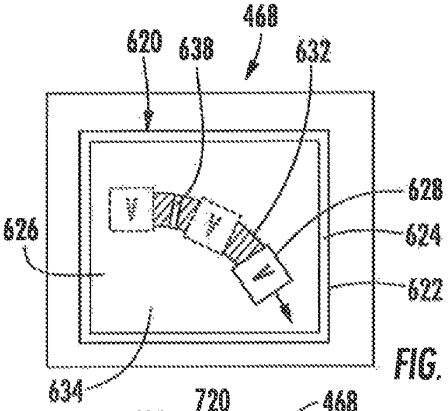

FIG. 7

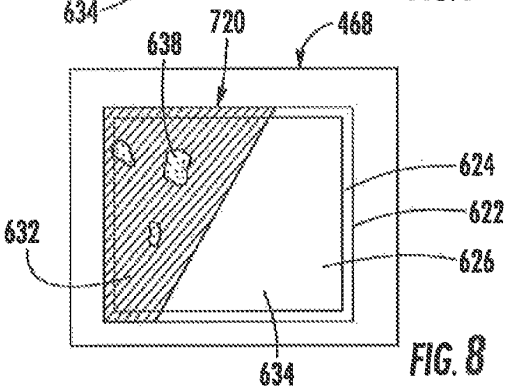

FIG. 8

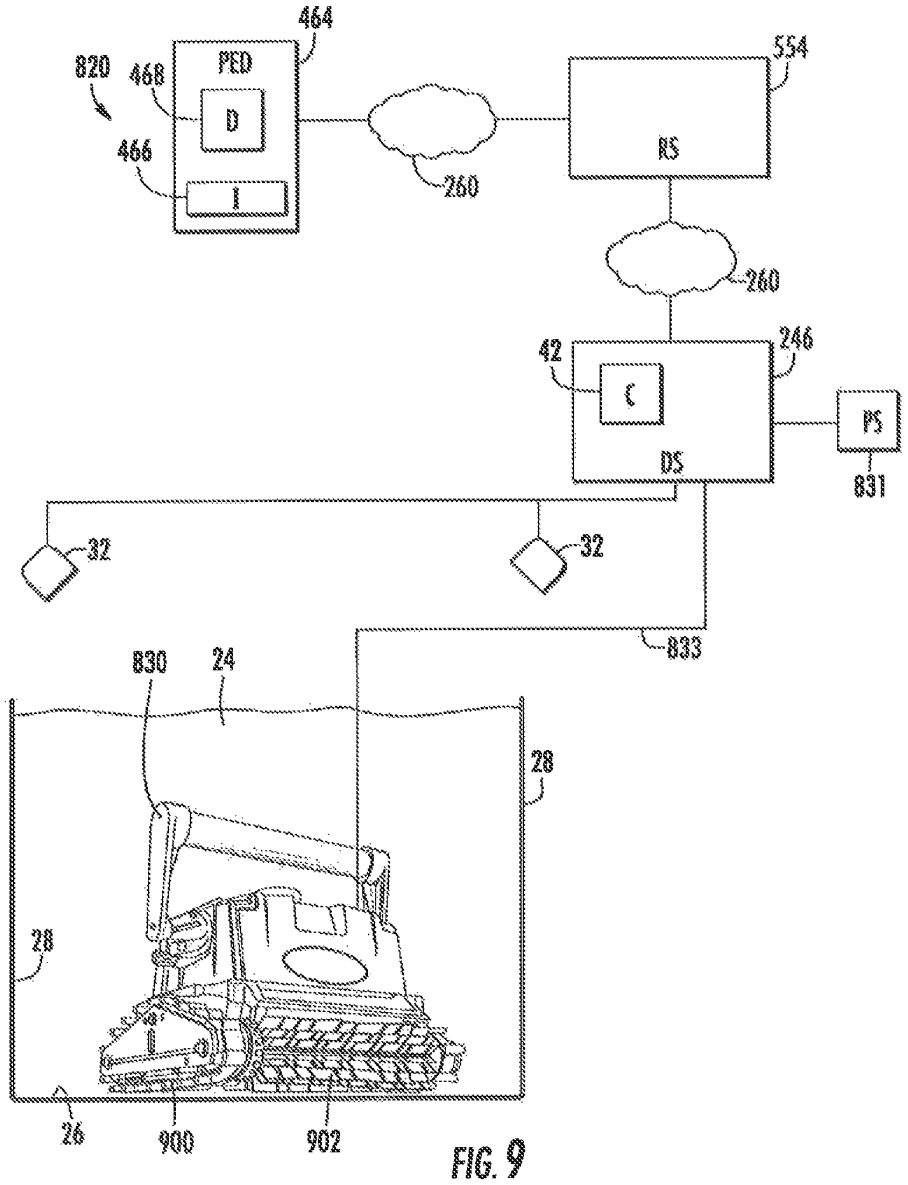
464
820
468
PED
D
466
I
260
554
RS
260
42
246
C
PS
DS
831
32
32
833
830
24
28
28
26
900
902

FIG. 9

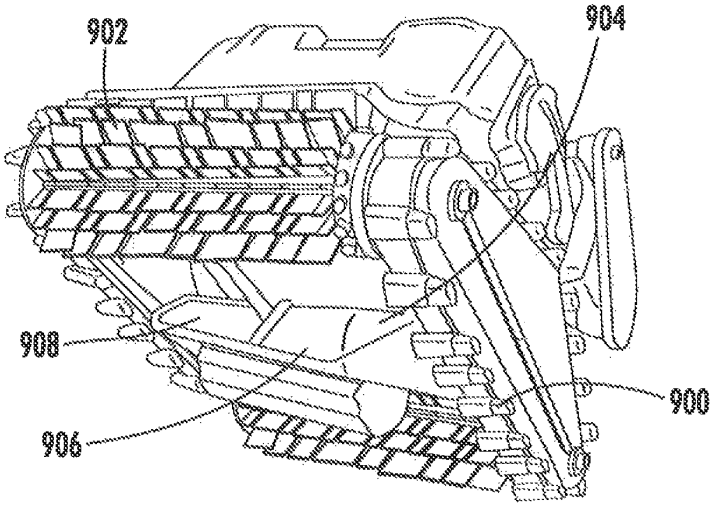

FIG. 10

POOL CLEANING SYSTEM AND METHOD TO AUTOMATICALLY CLEAN SURFACES OF A POOL USING IMAGES FROM A CAMERA

CROSS-REFERENCE TO RELATED APPLICATION

This patent application is a Continuation of commonly owned U.S. patent application Ser. No. 13/545,918, filed Jul. 10, 2012, the contents of which are incorporated by reference herein in its entirety.

BACKGROUND

Manually cleaning the floor and sides of a swimming pool may be a tedious and time-consuming task. As a result, automated robotic pool cleaners have been developed. However, controlling and monitoring such automated robotic pool cleaners to insure that all portions of the pool surfaces are satisfactorily cleaned remains a challenge.

BRIEF DESCRIPTION OF THE DRAWINGS

FIG. **1** is a schematic illustration of an example pool cleaning system.

FIG. **2** is a schematic illustration of an implementation of the pool cleaning system of FIG. **1**.

FIG. **3** is a schematic illustration of an implementation of the pool cleaning system of FIG. **1**.

FIG. **4** is a schematic illustration of an implementation of the pool cleaning system of FIG. **1**.

FIG. **5** is a schematic illustration of an implementation of the pool cleaning system of FIG. **1**.

FIG. **6** is a flow diagram of an example method that may be carried out with the pool cleaning system of FIG. **2**-**5**.

FIG. **7** is a plan view of an example display with an example graphical depiction.

FIG. **8** is a plan view of another example display with an example graphical depiction.

FIG. **9** is a schematic illustration of an implementation of the pool cleaning system of FIG. **1** with an example pool cleaning vehicle.

FIG. **10** is a bottom perspective view of the example pool cleaning vehicle of the system of FIG. **9**.

DETAILED DESCRIPTION OF THE EXAMPLE EMBODIMENTS

FIG. **1** schematically illustrates an example pool cleaning system **20**. As schematically shown by FIG. **1**, pool cleaning system **20** is adapted to clean submerged surfaces of a pool **22** containing a liquid **24**. In particular, pool cleaning system **20** is adapted to clean at least a bottom or floor surface **26** of the pool **22** and possibly to additionally clean surfaces **28** of pool **22**. As will be described hereafter, pool cleaning system facilitates the control and monitoring of a robotic pool cleaner to better assure that all portions of pool **22** are satisfactorily cleaned.

Pool cleaning system **20** comprises vehicle **30**, cameras **32** and controller **42**. Vehicle **30** comprises an automated powered device configured to travel adjacent to submerged or water containing surfaces of pool **20** (such as floor **26** and/or side surfaces **28**) while cleaning such surfaces. In one implementation, vehicle **30** may include vacuum or suction devices, a liquid circulation system and a filter to draw debris, such as bacterial growth or plant growth, from such

pool surfaces, wherein the drawn liquid containing such residue or foreign matter is filtered to collect the debris. In other implementations, vehicle **30** may not collect such debris, wherein vehicle **30** merely loosens such debris on the pool surfaces such that the loosened or separated debris may be subsequently removed using the existing liquid filtering system of pool **22**.

To assist in the loosening of debris, in one implementation, vehicle **30** may additionally include a chemical dispenser to closely apply pool cleaning chemicals to the pool surfaces as the vehicle **30** traverses such surfaces. In one implementation, vehicle **30** may additionally or alternatively include one or more scrubbing members, such as active (driven) or passive (undriven or idling) brushes, to assist in the removal of residue or foreign matter from such pool surfaces. In yet another implementation, vehicle **30** may additionally or alternatively include liquid jets to assist in the loosening of debris.

To move along the submerged surfaces of pool **22**, vehicle **30** includes one or more propulsion mechanisms. In one implementation, vehicle **30** is propelled along the submerged pool surfaces using wheels, rollers, tracks or other surface contacting members powered by a motor and the like. Such wheels, rollers or tracks may themselves include the scrubbing members used to clean the surfaces. In one implementation vehicle **30** may also alternatively be propelled by means of the vacuum or liquid jets. The vacuum or liquid jets used for such propulsion nozzle facilitate loosening of debris for collection by vehicle **30**. In other implementations, vehicle **30** may include other propulsion mechanisms.

Cameras **32** comprise devices configured to capture video or time lapse images of pool **22**. In the example illustrated, cameras **32** are mounted on structures external to pool **22**. In other words, cameras **32** are not submerged. In other implementations, cameras **32** may alternatively be mounted to vehicle **30**. In the example illustrated, cameras **32** capture movement of vehicle **30** while vehicle **30** is submerged within pool **22**. In other implementations, cameras **32** merely capture images of submerged surfaces **26**, **28** of pool **22**.

In the example illustrated, cameras **32** comprise cameras serving as part of a home or pool security system, wherein such cameras detect the presence of a person at pool **22** satisfying a predefined characteristic and wherein an alert is output upon the person's detected presence. For example, in one implementation, cameras **32** are utilized as part of a security system that detects when a person below a predefined age, such as a child, is present at pool **22** without a detected presence of a recognized adult. In another implementation, cameras **32** may detect the presence of an unauthorized person or intruder at pool **22**. Identification of the person may be achieved by an off-site human or computerized monitoring system, wherein signals from cameras **32** are transmitted across a wide area network or may be achieved with software of controller **42** which includes facial recognition or other identification programming.

Because pool cleaning system **20** utilizes pre-existing cameras **32** provided as part of a security system or shares the use of cameras **32** with such a home or pool security system, pool cleaning system **20** is easier to set up, less complex and less expensive. In other implementations, pool cleaning system **20** may utilize dedicated cameras **22** independent of any cameras associated with a home, facility or pool security system. In such an alternative system, cameras **32** may be more precisely focused upon pool **22** and surfaces **26**, **28** while also including appropriate lenses or modifica-

tions to account for glare, refraction and the like to better facilitate the capture of surfaces and vehicle **30** which are submerged.

Controller **42** comprises one or more processing units in communication with vehicle **30** and cameras **32**. For purposes of this application, the term "processing unit" shall mean a presently developed or future developed processing unit that executes sequences of instructions contained in a memory. Execution of the sequences of instructions causes the processing unit to perform steps such as generating control signals. The instructions may be loaded in a random access memory (RAM) for execution by the processing unit from a read only memory (ROM), a mass storage device, or some other persistent storage. In other embodiments, hard wired circuitry may be used in place of or in combination with software instructions to implement the functions described. For example, controller **42** may be embodied as part of one or more application-specific integrated circuits (ASICs). Unless otherwise specifically noted, the controller is not limited to any specific combination of hardware circuitry and software, nor to any particular source for the instructions executed by the processing unit.

In one implementation, controller **42** communicates with vehicle **30** and cameras **32** entirely across a wired connection. In another implementation, controller **42** communicates with vehicle **30** and cameras **32** across a wireless connection, such as cross a local area network (LAN) or a wide area network (WAN) such as the Internet. One of limitation, controller **42** may communicate with vehicle **30** and cameras **32** using a combination of both wired and wireless communication connections.

Controller **42** is configured to generate control signals for steering vehicle **30** based upon signals received from cameras **32**. In one implementation, controller **42** provides the sole steering directions for vehicle **30** using signals from cameras **32**. Because vehicle **30** is precisely steered under the control of controller **42**, rather than traveling in a random manner, entire summer surfaces of pool **22** may be more quickly and efficiently covered and cleaned. Because controller **42** provides the only steering instructions for vehicle **30** and utilizes signals from cameras **32**, complex steering algorithms or codes in either vehicle **30** or controller **42** may be omitted to reduce complexity and cost of system **20**.

In another implementation, vehicle **30** may cover or travel across surfaces of pool **22** in either a random fashion or according to an automated pool coverage algorithm or pool coverage pattern stored in a memory associated with vehicle **30** or controller **42**. In such an implementation, controller **42** utilizes signals from cameras **32** to verify that all of the surfaces of pool **22** have been cleaned, that no spots have been missed. Upon identifying a missed spot, controller **42** utilizes signals from camera **32** to steer vehicle **32** over such missed portions of surfaces **26**, **28**. According to one example, controller **42** not only uses signals from camera **32** to determine whether any portions of surfaces **26**, **28** have been missed entirely, but to also determine whether any portions of surfaces **26**, **28** have been cleaned, but not to a satisfactory degree or extent. In such circumstances, controller **42** uses signals from cameras **32** to steer vehicle **34** such areas to re-clean such portions until such portions have been satisfactorily cleaned such that the portions have a cleanliness characteristic satisfying a predefined threshold.

FIG. **2** schematically illustrates pool cleaning system **120**, the particular example of pool cleaning system **20** described above. Pool cleaning system **120** is similar to pool cleaning system **20** except that pool cleaning system **120** additionally comprises dry station **46** and display **50**. Those remaining components of pool cleaning system **120** which correspond to components of pool cleaning system **20** are numbered similarly.

Dry station **46** comprises a station in communication with vehicle **30** and cameras **32** outside of pool **22**. Dry station **46** incorporates controller **42**. In one implementation, dry station **46** communicates with vehicle **30** in a wired fashion. In such an implementation, dry station **46** further provides electrical power to vehicle **30** in a wired fashion. Dry station **46** communicates with cameras **32** and either a wired or wireless fashion.

Display **50** comprises a device to present a graphical images and text on a display screen. In one implementation, display **58** may be incorporated as part of dry station **46**. In another implementation, display **50** may be provided on a portable electronic device, a computer, a television and the like. Display **50** is utilized by pool cleaning system **120** to present information regarding the cleaning of pool **22** to facilitate control of vehicle **30** by controller **42**. In one implementation, display **50** is utilized by pool cleaning system **120** and a controller **42** to present a graphical depiction of those portions of surfaces **26**, **28** of pool **22** have not been satisfactorily cleaned so as to satisfy a predefined cleanliness characteristic threshold. Such portions may comprise portions that have been completely missed by vehicle **30** as well as those portions that have been covered by vehicle **30** but have not been satisfactorily cleaned with the given number of passes of vehicle **30** or the existing cleaning settings of vehicle **30**. The graphical depiction presented on display **50** enables a person view the quality of the prior cleaning session and to input commands causing controller **42** to generate control signals using signals from camera **32** to steer vehicle **30** back to such identified portions where such portions may be cleaned at the same or elevated cleaning aggressiveness settings.

Another implementation, display **50** may be further utilized by controller **42** to depict the progress of vehicle **30** in cleaning pool **22**. Such a display **50** allows a person to visually determine how much of the pool has been currently cleaned and to estimate the remaining time before the pool cleaning task is completed. In certain circumstances, using display **50**, a person may adjust a setting of vehicle **30** to accelerate a rate at which surfaces **26**, **20** of pool **22** are cleaned to meet an earlier desired completion time for such pool cleaning.

FIG. **3** schematically illustrates pool cleaning system **220**, another example implementation of pool cleaning system **20**. Pool cleaning system **220** is similar to pool cleaning system **20** except that pool cleaning system **220** additionally comprises dry station **246**, display **50**, and remote server **254**. Those remaining components of pool cleaning system **220** which correspond to components of pool cleaning system **20** or pool cleaning system **120** are numbered similarly.

Dry station **246** is similar to dry station **46**, described above, except that dry station **246** serves as a local interface for communication with controller **42** across a network **260**. In one implementation, network **260** may comprise a local area network. In another implementation, network **260** may comprise a wide area network, such as the Internet. For example, in one implementation, dry station **246** may incorporate a modem. In one implementation, dry station **246** may communicate across a local area network to controller **42**. In another implementation, dry station **246** may communicate through a router, across a local area network, to a local modem which communicates across a network **260**. The example illustrated, dry station **246** further provides

part of vehicle **30** across a wired cable or wired connection. Display **50** is described above with respect to system **120**.

Remote server **254** comprises a server remote from dry station **246** which is in communication with dry station **246** across network **260**. Remote server **254** includes controller **42**. During operation, signals from cameras **32** are transmitted across dry station **246** across network **260** to controller **42** of remote server **254**. Based upon such signals from cameras **32**, controller **42** generates control signals which are transmitted back across network **260** and through dry station **246** to vehicle **30** to steer vehicle **30**.

As shown by FIG. **3**, remote server **254** and network **260** may be shared as part of other pool cleaning systems **320**, wherein controller **42** generates control signals for steering the pool cleaning vehicle **30** of system **320** based upon signals from cameras **32** transmitted across dry station **246** of system **320**. In such an implementation, the cost and complexity of pool cleaning system **220** is reduced since controller **42** is remotely provided at remote server **254** which services multiple pool cleaning systems **220**, **320**. Upgrades to controller **42** and its software are also more easily achieved for all pool cleaning systems to **20**, **320** and their pools **22**, **222** being serviced. In one implementation, the supervised cleaning, inspection and possible re-cleaning facilitated by the use of cameras **32** may be provided as part of a subscription to users of vehicle **30**. In such an implementation, a pool **22** having security cameras **32** may be upgraded with appropriate software or an appropriate software module added to dry station **246** to make a network connection with controller **42** which directs the security cameras **32** to capture vehicle **3020** utilizes such signals for steering vehicle **30**.

FIG. **4** schematically illustrates pool cleaning system **420**, another particular implementation of pool cleaning system **20**. Pool cleaning system **420** is similar to pool cleaning system **120** except that pool cleaning system **420** additionally comprises a portable electronic device **464**. Those remaining components of pool cleaning system **420** which correspond to components of pool cleaning system **120** are numbered similarly.

Portable electronic device **464** comprises a portable handheld electronic device in communication with controller **42** and/or dry station **46** across network **260**. Examples of such a portable electronic device (PED) **300** include, but are not limited to, a smart phone, a personal data assistant (PDA), laptop, notebook computer, tablet computer (e.g. IPAD) and MP3 player (e.g., IPOD TOUCH). In the example illustrated, PED **464** comprises input **466** and display **468**.

Input **466** serves as a user interface for PED **464** by which inputs are made to PED **464**. Input **466** facilitates entry of inputs or commands by a person to cause controller **42** to generate control signals varying the control of vehicle **30**. In one implementation, input **466** comprise a keyboard. In other implementations, input **466** may comprise a touchpad, a stylus, a microphone with associated speech recognition software or programming, a touch screen, buttons, switches and the like. In some implementations, input **466** may comprise a touch screen incorporated as part of display **468**.

Display **468** comprises a user interface by which graphical or textual data is presented to a user. Display **468** may present the same or similar information as presented at dry station **246** by display **50** as described above. In one implementation, display **468** comprises a liquid crystal display. In other implementations, display **468** may comprise other types of display technology such as a light emitting diode display, an organic light emitting diode display (OLED), an electronic ink (e-ink) display or other types of display technology in present use or developed in the future. Although system **420** is illustrated as including controller **422** is part of dry station **46**, in some implementations, controller **42** may alternatively be located as part of PED **464**.

PED **464** enables a person located remote from pool **22** to monitor the progress of the cleaning of pool **22** by vehicle **30** of system **420**. PED **464** provides a person with a graphical presentation (described above with respect to display **50**) indicating those portions of surfaces **26** **28** of pool **22** that have been completed as well as those portions **26**, **20** and that remain to be cleaned. The person may also be provided with a graphical indication of what portions need to be re-cleaned to meet predetermined cleanliness thresholds. In the example illustrated, input **466** enables a person to enter commands or selections which are transmitted across network **260** to controller **42** to adjust operation of vehicle **30**. For example, the path or route of vehicle **30** may be changed, the aggressiveness of the cleaning chemicals or mechanical cleaning devices may be adjusted, the speed at which vehicle **30** traverses surfaces **26**, **28** may be adjusted. In response to such adjustment signals from PED **464**, controller **42** may utilize signals from cameras **32** to adjust the steering of vehicle **30**.

FIG. **5** schematically illustrates pool cleaning system **520**, another example implementation of pool cleaning system **20**. Pool cleaning system **520** is similar to pool cleaning system **420** except that pool cleaning system **520** additionally comprises a remote server **554**. Those remaining components of pool cleaning system **520** which correspond to components of pool cleaning system **420** are numbered similarly.

Remote server **554** is similar to remote server **254** described above with respect to system **220**. Remote server **554** comprises a server remote from dry station **246** which is in communication with dry station **246** across network **260**. Remote server **254** includes controller **42**. During operation, signals from cameras **32** are transmitted across dry station **246** across network **260** to controller **42** of remote server **254**. Based upon such signals from cameras **32**, controller **42** generates control signals which are transmitted back across network **260** and through dry station **246** to vehicle **30** to steer vehicle **30**. Controller **42** further relays either the raw signals from camera **32** or image signals generated based upon signals from cameras **32** to PED **464**, wherein such images (described above) are presented on display **468**. As noted above, PED may further receive commands through input **466**, wherein such commands are transmitted to controller **42** which generates control signals that are ultimately transmitted to vehicle **30** for steering vehicle **30**.

As with remote server **254**, remote server **554** and network **260** may be shared as part of other pool cleaning systems **320** (shown in FIG. **3**), wherein controller **42** generates control signals for steering the pool cleaning vehicle **30** of system **320** based upon signals from cameras **32** transmitted across dry station **246** of system **320**. In such implementations, controller **42** of remote server **554** may interact with other PEDs **464**. In such an implementation, the cost and complexity of pool cleaning system **220** is reduced since controller **42** is remotely provided at remote server **254** which services multiple pool cleaning systems **220**, **320**. Upgrades to controller **42** and its software are also more easily achieved for all pool cleaning systems to **20**, **320** and their pools **22**, **222** being serviced. In one implementation, the supervised cleaning, inspection and possible re-cleaning facilitated by the use of cameras **32** may be

provided as part of a subscription to users of vehicle **30**. In such an implementation, a pool **22** having security cameras **32** may be upgraded with appropriate software or an appropriate software module added to dry station **246** to make a network connection with controller **42** which directs the security cameras **32** to capture vehicle **3020** utilizes such signals for steering vehicle **30**. As indicated by broken lines, in other implementations, the controller **42** for generating control signals steering vehicle **30** based upon signals from cameras **32** may alternatively be relocated in PED **464**.

FIG. **6** is a flow diagram illustrating an example method **600** that may be carried out by any of systems **120-520**. As indicated by step **602**, cameras **32** capture images of pool cleaning by vehicle **30**. As indicated by step **604**, controller **42** obtain such signals from cameras **32** for the surfaces of pool **22** that have been cleaned. As indicated by step **606**, controller **42** uses information gathered from the signals from cameras **32** to identify those portions of surfaces **26**, **28** not satisfactorily cleaned—not satisfying a predefined cleanliness characteristic or measurement threshold. One example of a cleanliness characteristic measurement a threshold may be how well the color of a surface matches a predetermined desirable color for the pool surface (such as original color of the tile or surface). A surface that has been missed entirely by vehicle **30** during a pool cleaning session may be automatically deemed to not satisfy a predetermined cleanliness characteristic.

As indicated by step **608**, based upon such determinations, controller **42** generates control signals resulting in the presentation of a graphical depiction of those portions of pool **22** that has not been satisfactorily cleaned. Such graphical representations or depictions may be presented on display **50** or display **468**. FIGS. **7** and **8** illustrate examples of graphical depictions that may be presented.

FIG. **7** illustrates display **468** presenting graphical depiction **620**. Graphical depiction **620** comprises a first graphic **622** having a first portion **624** representing sides or walls **28** of pool **22** and a second portion **626** representing the floor **26** of pool **22**. Graphical depiction **620** further comprises a moving icon **628** representing the current positioning of vehicle **30**. In one implementation, the path of vehicle **30** may additionally be depicted by icon **628** shown in broken lines. As shown by FIG. **7**, those portions **632** of surfaces **26**, **28** of pool **22** (shown in FIG. **1**) over which of vehicle **30** has moved are identified by graphical depiction **620** either by color, markings or other various distinctive attributes. Likewise, those portions **634** of surfaces **26**, **28** of pool **22** that have not been covered by vehicle **30** are identified by a distinct color col marking or distinctive attribute of depiction **620**. As a result, a person may view the current position of vehicle **30**, the extent to which pool **22** has been cleaned or covered by vehicle **30** and the extent of pool **22** that remains to be cleaned. In the example illustrated, depiction **620** further identifies those portions **638** of surfaces **26**, **28** that have been cleaned, but which have not been cleaned to a satisfactory degree or extent. In one implementation, portions **638** may be identified by colors, brightness, markings or other visually distinctive attributes that are visually distinct from both portions **632** and portions **634**. In other implementations, portions **638** may have the same characteristic of portions **634**. In yet other implementations, different portions **638** may have different visual attributes depending upon a degree to which such clean portions have failed to satisfy the predefined cleanliness characteristic threshold. In some implementations, different port **638** may have different visual attributes depending upon different cleaning strategies that may be recommended for the different portions **638**. For example, controller **42** may determine and recommend a first cleaning strategy (a first chemical solution jetted at a first rate and scrubbed at a first rate) with respect to a first portion **638** and may recommend a second different cleaning strategy (a second chemical solution jetted at a second rate is about a second rate) with respect to a second portion **638**, wherein the different cleaning strategies are represented by different visual attributes presented in depiction **620**.

FIG. **8** illustrates display **468** presenting a graphical depiction **720**. Graphical depiction **720** comprises a first graphic **622** having a first portion **624** representing sides or walls **28** of pool **22** and a second portion **626** representing the floor **26** of pool **22** (shown in FIG. **1**). Graphical depiction **720** is similar to graphical depiction **620** except that graphical depiction **720** omits icon **628** presenting vehicle **30**. Like depiction **620**, depiction **720** graphically depicts those portions **632** of surfaces **26**, **28** over which vehicle **30** has traveled while in a cleaning mode. Depiction **720** also visually depicts those portions **634** that have not been covered by vehicle **30** in the cleaning mode and those portions **638** over which vehicle **30** has traveled while in the cleaning mode, but which have not been cleaned to a satisfactory degree. As illustrated in FIG. **8**, different portions **638** may be visibly distinguished from one another through color, text or markings indicating either differences in the cleanliness of such portions **638** or indicating different recommended cleaning strategies or approaches that may be selected by a person using input **466** when vehicle **30** is steered back to such portions **638** for re-cleaning using signals from camera **32**.

As indicated by step **610** of FIG. **6**, controller **42** generates control signals steering vehicle **30** to re-clean portions of pool **22**, such as portions **638**. Such steering may be facilitated by using signals from cameras **32**. As noted above, in some implementations, a person may be allowed choose a cleaning approach for a particular portion **638** using input **466**. The selection may be facilitated by visual inspection of the different visual attributes for the particular portion **638** provided by depiction **720** (or depiction **620**). In some implementations, input **466** may additionally be utilized by a person to prioritize an order in which portions **638** are re-cleaned.

FIG. **9** illustrates pool cleaning system **820**, an example implementation of pool cleaning system **20**. Pool cleaning system **820** is similar to pool cleaning system **520** except the pool cleaning system **820** located controller **42** in dry station **246** and includes pool cleaning vehicle **830**, a specific example of vehicle **30**. As shown by FIG. **9**, in addition to transmitting control signals generated by controller **42** to vehicle **830**, dry station **246** further transmits power from power source **831** through a power line or power cable **833** to vehicle **830**. In the example illustrated, data communication and communication of control signals, also occurs across wired connections within or alongside the same line **833**. In the example illustrated, remote server **554** serves as a communication link by which upgrades to controller **42** may be implemented across a wide number of pool cleaning systems and by which information from controller **42** is conveyed to one or more portable electronic devices **464** across network **260**.

Vehicle **830** comprises a robotic or automated pool cleaning device. Vehicle **830** comprises a self-contained onboard filtration system with drive and pump motors. Vehicle **830** utilizes an internal microprocessor guided drive motor to systematically clean surfaces of pool **22**. As shown by FIGS. **9** and **10**, vehicle **830** utilizes a toothed track drive **900**

provide traction and propulsion for vehicle **30**. Vehicle **830** comprises rotating brushes **902** to loosen waterline buildup and breakdown large debris while power washing jets **904** flush out dirt from pores, seems in corners where brushes **902** may not be able to reach. The loosened dirt and debris is vacuumed through off-center vacuum ports **906** which passes the vacuumed debris through internally house filter bag. In the example illustrated, vehicle **830** further comprises rollers **908** which inhibit vehicle **830** from becoming impeded or stuck on raised drains or pop-up heads. Although illustrated as being employed with system **820**, vehicle **830** may also be utilized with any of systems **20**, **120**, **220**, **320** and **420**. In other implementations, other robotic or automated pool cleaning vehicles may be utilized.

Although the present disclosure has been described with reference to example embodiments, workers skilled in the art will recognize that changes may be made in form and detail without departing from the spirit and scope of the claimed subject matter. For example, although different example embodiments may have been described as including one or more features providing one or more benefits, it is contemplated that the described features may be interchanged with one another or alternatively be combined with one another in the described example embodiments or in other alternative embodiments. Because the technology of the present disclosure is relatively complex, not all changes in the technology are foreseeable. The present disclosure described with reference to the example embodiments and set forth in the following claims is manifestly intended to be as broad as possible. For example, unless specifically otherwise noted, the claims reciting a single particular element also encompass a plurality of such particular elements.

What is claimed is:

1. A pool cleaning system for cleaning debris from a submerged surface of a swimming pool comprising:

a self-propelled pool cleaner having rotatably-mounted supports for supporting and guiding the cleaner on the pool surface;

a filter configured to retain the debris collected from the submerged surface of the swimming pool;

an electric motor for enabling the rotation of the rotatably-mounted supports on the pool surface;

at least one camera to capture imagery of the pool surface;

a controller, in electronic communication with the at least one camera, to determine a cleanliness characteristic of the pool surface on which the cleaner has passed based on the camera imagery and generate a control signal to direct movement of the cleaner based on the cleanliness characteristic of the pool surface, wherein the control signal directs movement of the cleaner to reclean a portion of the pool surface where the cleanliness characteristic fails to satisfy a predefined threshold.

2. The system of claim **1**, wherein the at least one camera is carried by the cleaner.

3. The system of claim **1**, wherein the controller is carried by the cleaner.

4. The system of claim **1**, wherein the electric motor is mechanically connected to at least one of the rotatably-mounted supports.

5. The system of claim **1**, wherein the controller is operable to execute one or more cleaning programs for cleaning the submerged surfaces of the pool.

6. The system of claim **1**, wherein the captured imagery from the at least one camera is digitally processed by the controller to determine the cleanliness characteristic of the pool surface.

7. The system of claim **1**, wherein the captured imagery from the at least one camera is digitally processed by a remote processor to determine the cleanliness characteristic of the pool surface.

8. The system of claim **1** further comprising at least one sensor to detect the cleanliness characteristic of the pool surface on which the cleaner has passed.

9. The system of claim **8**, wherein the at least one sensor is carried by the cleaner.

10. The system of claim **1**, wherein the control signal causes the cleaner to drive in the direction of the portion of the pool surface to be recleaned.

11. The system of claim **1**, wherein the control signal causes the cleaner to steer in the direction of the portion of the pool surface to be recleaned.

12. The system of claim **1** further comprising a dry station located remotely from the cleaner and in communication with the cleaner, wherein the dry station includes the controller.

13. The system of claim **1** further comprising a dry station located remotely from the cleaner and in communication with the cleaner, wherein the controller is located remotely from the cleaner and the dry station.

14. The system of claim **1** further comprising a portable electronic device having a display, wherein the portable electronic device is configured to present a graphic on the display, the graphic depicting the submerged surface of the pool and those portions of the surface that remain uncleaned as the cleaner traverses the pool surface.

15. The system of claim **1**, wherein the controller controls electric power provided to the electric motor.

16. A pool cleaning system for cleaning debris from a submerged surface of a swimming pool comprising:

a self-propelled pool cleaner having rotatably-mounted supports for supporting and guiding the cleaner on the pool surface;

an electric motor for enabling the rotation of the rotatably-mounted supports on the pool surface;

a filter configured to retain the debris collected from the submerged surface of the swimming pool;

at least one camera to capture imagery of the pool surface;

at least one sensor to detect a cleanliness characteristic of the pool surface on which the cleaner has passed;

a controller in electronic communication with the at least one camera and the at least one sensor to a generate a control signal to direct movement of the cleaner based on the cleanliness characteristic of the pool surface; and

wherein the control signal directs movement of the cleaner to reclean a portion of the pool surface where the cleanliness characteristic fails to satisfy a predefined threshold.

17. The system of claim **16**, wherein the at least one camera and at least one sensor are carried by the cleaner.

18. The system of claim **16**, wherein the controller is operable to execute one or more cleaning programs for cleaning the submerged surfaces of the pool.

19. The system of claim **16**, wherein the at least one camera captures the imagery during a pass of the cleaner on the submerged surface and the captured imagery from the at least one camera is utilized to determine the cleanliness characteristic of the pool surface.

20. The system of claim **16**, wherein the captured imagery from the at least one camera is digitally processed by the controller to determine the cleanliness characteristic of the pool surface.

21. The system of claim **16**, wherein the control signal causes the cleaner to drive in the direction of the portion of the pool surface to be recleaned.

22. The system of claim **16**, wherein the controller controls electric power provided to the electric motor.

* * * * *

EXHIBIT G

US009388595B2

(12) **United States Patent**
Durvasula et al.

(10) **Patent No.: US 9,388,595 B2**
(45) **Date of Patent: Jul. 12, 2016**

(54) **POOL CLEANING SYSTEM AND METHOD TO AUTOMATICALLY CLEAN SURFACES OF A POOL USING IMAGES FROM A CAMERA**

(75) Inventors: **Kameshwar Durvasula**, Lyndhurst, NJ (US); **William Londono Correa**, Bloomfield, NJ (US)

(73) Assignee: **Aqua Products, Inc.**, Cedar Grove, NJ (US)

(*) Notice: Subject to any disclaimer, the term of this patent is extended or adjusted under 35 U.S.C. 154(b) by 909 days.

(21) Appl. No.: **13/545,918**

(22) Filed: **Jul. 10, 2012**

(65) **Prior Publication Data**

US 2014/0015959 A1 Jan. 16, 2014

(51) **Int. Cl.**

H04N 7/18	(2006.01)
E04H 4/16	(2006.01)
H04N 5/232	(2006.01)
H04N 5/225	(2006.01)

(52) **U.S. Cl.**

CPC ***E04H 4/1654*** (2013.01); ***H04N 5/23203*** (2013.01); ***H04N 7/18*** (2013.01); *H04N 2005/2255* (2013.01)

(58) **Field of Classification Search**

CPC E04H 4/1654; H04N 5/23203; H04N 7/18; H04N 2005/2255

USPC 348/114, 143, 159; 382/103; 356/4.03

See application file for complete search history.

(56) **References Cited**

U.S. PATENT DOCUMENTS

5,205,174	A	4/1993	Silverman et al.	
5,435,031	A	7/1995	Minami et al.	
5,507,058	A	4/1996	Minami et al.	
5,613,261	A	3/1997	Kawakami et al.	
5,886,630	A †	3/1999	Menoud	
7,123,746	B2 *	10/2006	Meniere et al.	382/103
7,362,351	B2 *	4/2008	Meniere et al.	348/143
7,398,138	B2	7/2008	Emery et al.	
7,993,600	B2	8/2011	Doyle et al.	
8,007,653	B2	8/2011	Porat	
8,043,070	B2	10/2011	Stiles, Jr. et al.	
2002/0097322	A1 *	7/2002	Monroe et al.	348/159
2004/0025268	A1	2/2004	Porat	
2004/0040581	A1 †	3/2004	Bruwer	
2007/0094817	A1	5/2007	Stoltz et al.	
2010/0299016	A1	11/2010	Benzler et al.	

(Continued)

FOREIGN PATENT DOCUMENTS

CN	101139007	A	3/2008
EP	0687964	A1	12/1995

(Continued)

OTHER PUBLICATIONS

Spanish Patent No. P201331047—State of Art Search Report from the ES Patent and Trademark Office; mailed Feb. 3, 2015; 1 page.

(Continued)

Primary Examiner — Allen Wong

(74) *Attorney, Agent, or Firm* — Abelman, Frayne & Schwab

(57) **ABSTRACT**

A pool cleaning system utilizes a powered robotic surface cleaning vehicle to travel adjacent water containing surfaces of a pool while submerged within the pool. In one implementation, a camera captures movement of the vehicle. In one implementation, a dry station serve the intermediary across a wide area network between the vehicle and a server which communicates with the portable electronic device.

22 Claims, 4 Drawing Sheets

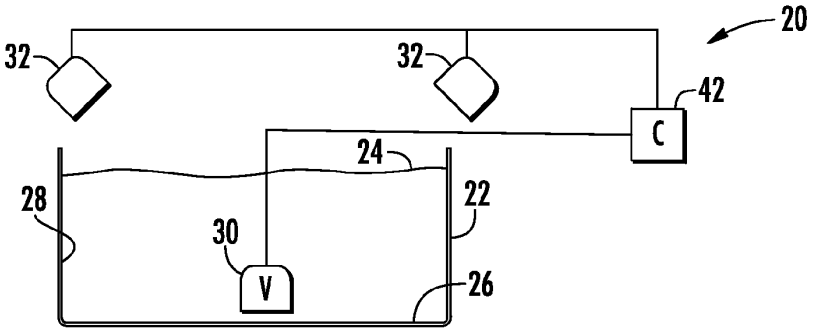

(56) **References Cited**

U.S. PATENT DOCUMENTS

2011/0091329	A1	4/2011	Stiles, Jr. et al.	
2011/0301752	A1	12/2011	Finezilber	
2013/0151061	A1†	6/2013	Hong	
2013/0269097	A1†	10/2013	Alammari	
2014/0009748	A1*	1/2014	Leonessa et al.	356/4.03

FOREIGN PATENT DOCUMENTS

EP	0811432	A2	12/1997	
JP	S6162905	A	3/1986	
WO	2004019295	A1	3/2004	
WO	2009031361	A1	12/2009	
WO	2012023676	A1	2/2012	
WO	WO-2012/023676	A1 *	2/2012	E04H 4/16

OTHER PUBLICATIONS

Notification Regarding the Response to the Substantive Examination issued by the Spanish Patent and Trademark Office dated May 5, 2016 in corresponding application ES 2527883 (in Spanish with English lanslation).

* cited by examiner
† cited by third party

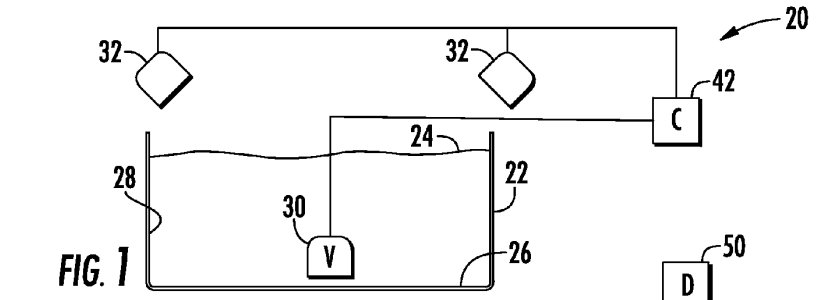

FIG. 1

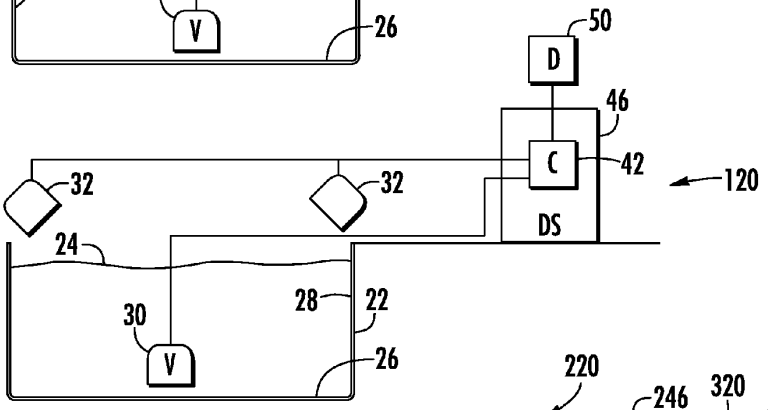

FIG. 2

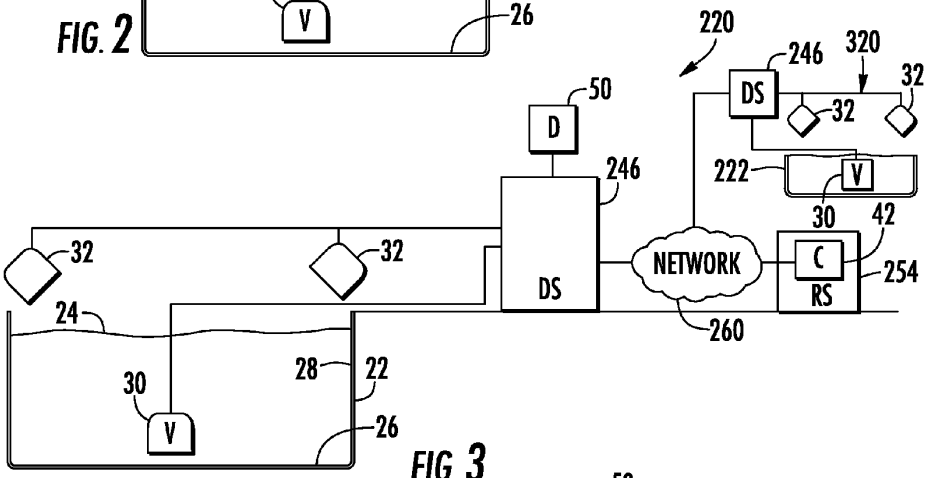

FIG. 3

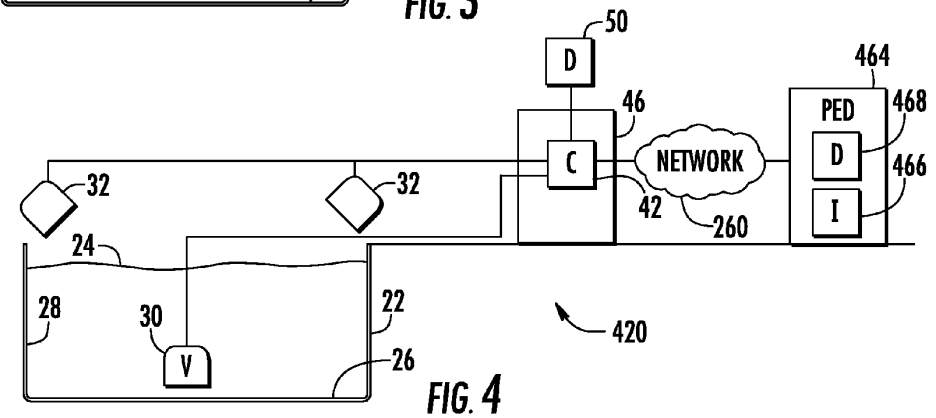

FIG. 4

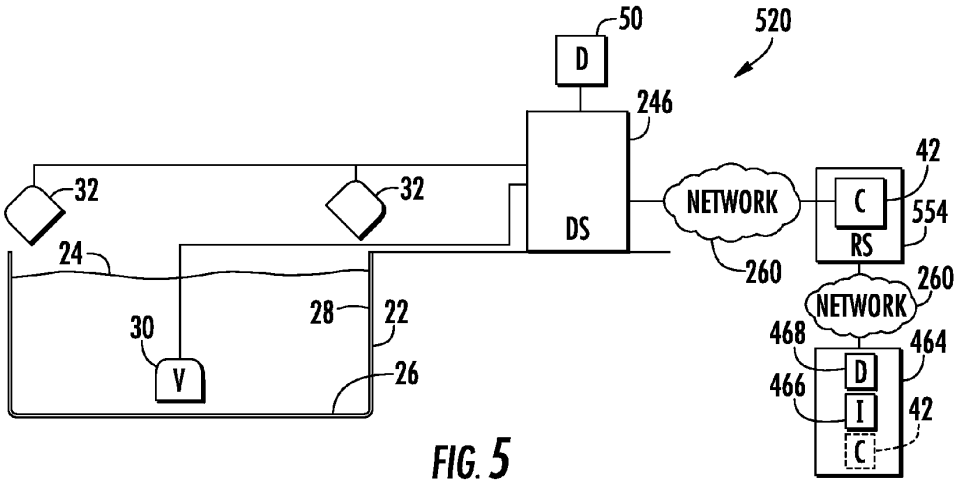

FIG. 5

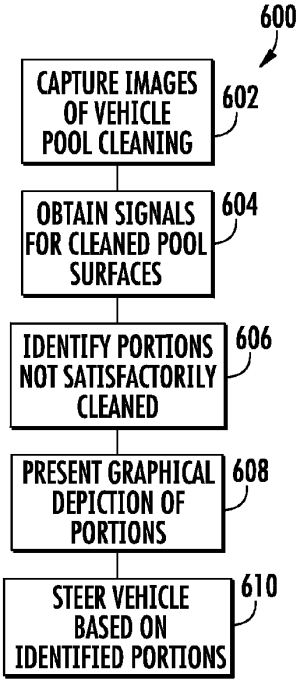

FIG. 6

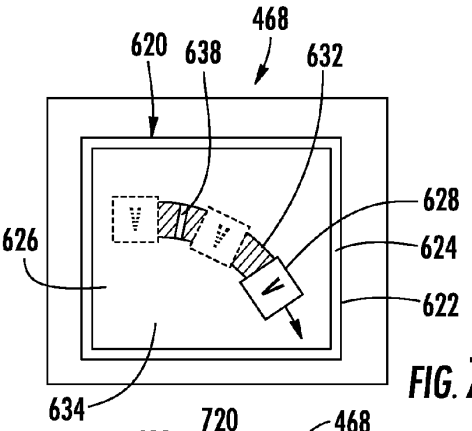

FIG. 7

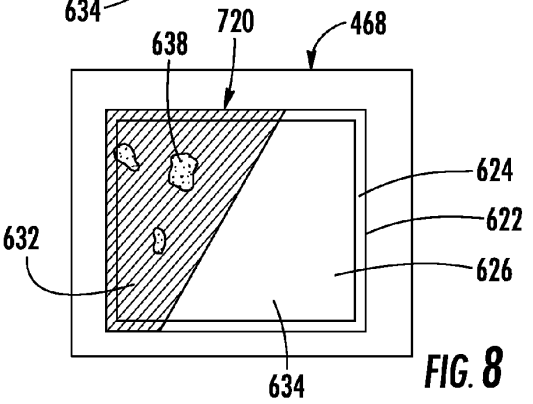

FIG. 8

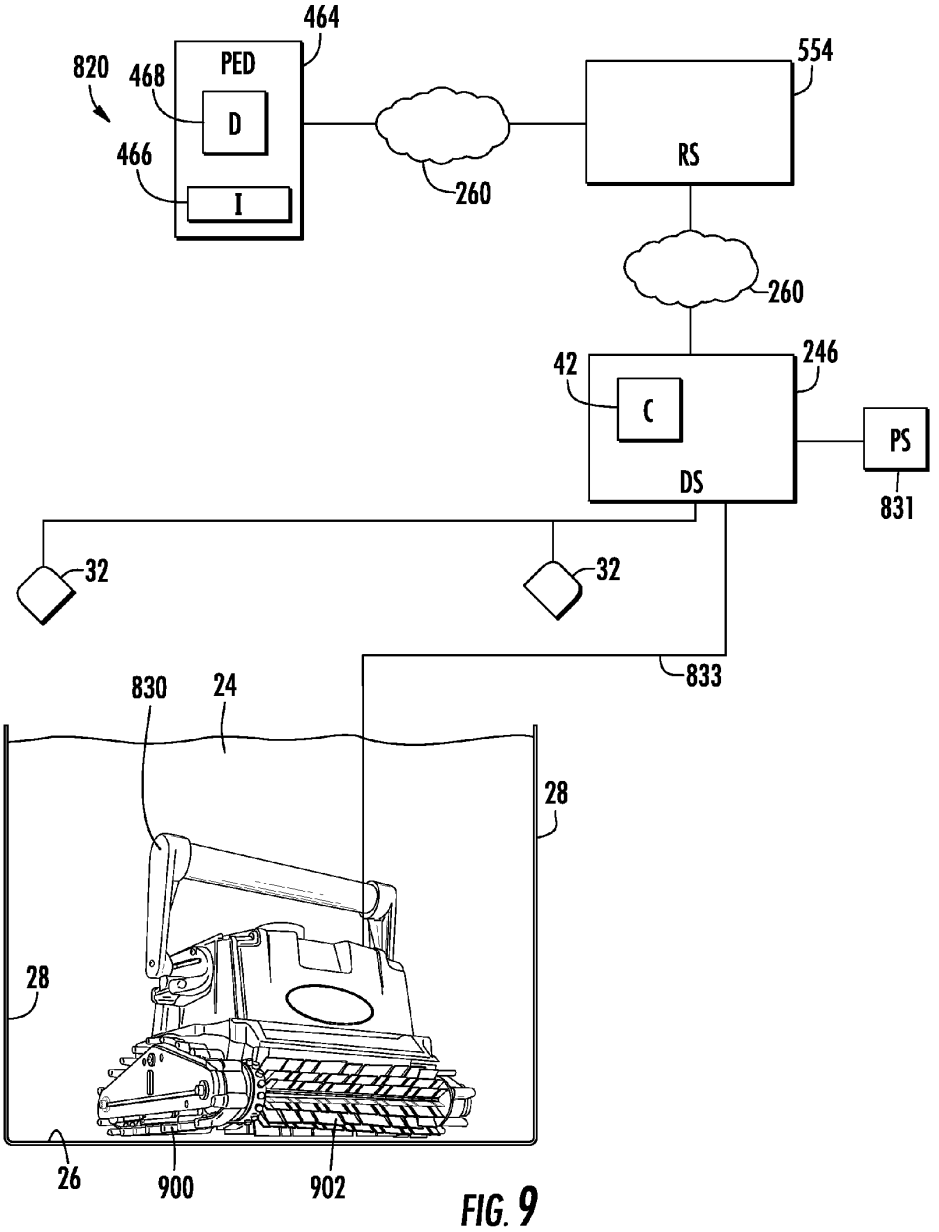
464
820
468
PED
D
466
I
260
554
RS
260
42
246
C
DS
PS
831
32
32
833
830
24
28
28
26
900
902

FIG. 9

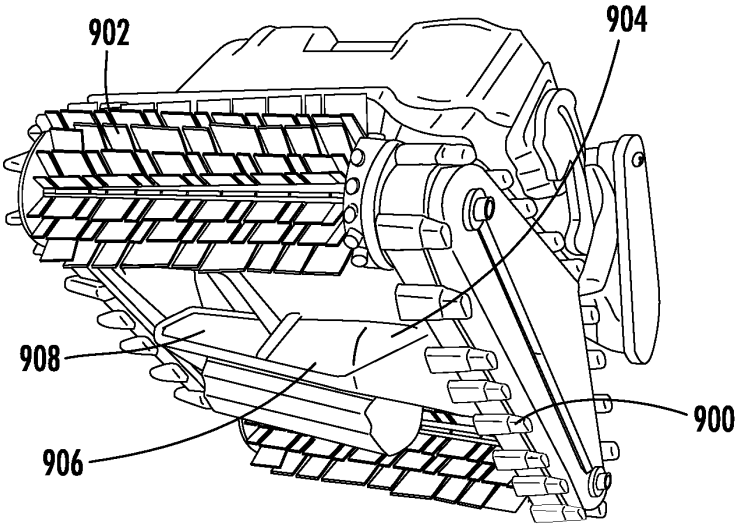

FIG. 10

POOL CLEANING SYSTEM AND METHOD TO AUTOMATICALLY CLEAN SURFACES OF A POOL USING IMAGES FROM A CAMERA

BACKGROUND

Manually cleaning the floor and sides of a swimming pool may be a tedious and time-consuming task. As a result, automated robotic pool cleaners have been developed. However, controlling and monitoring such automated robotic pool cleaners to insure that all portions of the pool surfaces are satisfactorily cleaned remains a challenge.

BRIEF DESCRIPTION OF THE DRAWINGS

FIG. **1** is a schematic illustration of an example pool cleaning system.

FIG. **2** is a schematic illustration of an implementation of the pool cleaning system of FIG. **1**.

FIG. **2** is a schematic illustration of an implementation of the pool cleaning system of FIG. **1**.

FIG. **3** is a schematic illustration of an implementation of the pool cleaning system of FIG. **1**.

FIG. **4** is a schematic illustration of an implementation of the pool cleaning system of FIG. **1**.

FIG. **5** is a schematic illustration of an implementation of the pool cleaning system of FIG. **1**.

FIG. **6** is a flow diagram of an example method that may be carried out with the pool cleaning system of FIG. **2-5**.

FIG. **7** is a plan view of an example display with an example graphical depiction.

FIG. **8** is a plan view of another example display with an example graphical depiction.

FIG. **9** is a schematic illustration of an implementation of the pool cleaning system of FIG. **1** with an example pool cleaning vehicle.

FIG. **10** is a bottom perspective view of the example pool cleaning vehicle of the system of FIG. **9**.

DETAILED DESCRIPTION OF THE EXAMPLE EMBODIMENTS

FIG. **1** schematically illustrates an example pool cleaning system **20**. As schematically shown by FIG. **1**, pool cleaning system **20** is adapted to clean submerged surfaces of a pool **22** containing a liquid **24**. In particular, pool cleaning system **20** is adapted to clean at least a bottom or floor surface **26** of the pool **22** and possibly to additionally clean surfaces **28** of pool **22**. As will be described hereafter, pool cleaning system facilitates the control and monitoring of a robotic pool cleaner to better assure that all portions of pool **22** are satisfactorily cleaned.

Pool cleaning system **20** comprises vehicle **30**, cameras **32** and controller **42**. Vehicle **30** comprises an automated powered device configured to travel adjacent to submerged or water containing surfaces of pool **20** (such as floor **26** and/or side surfaces **28**) while cleaning such surfaces. In one implementation, vehicle **30** may include vacuum or suction devices, a liquid circulation system and a filter to draw debris, such as bacterial growth or plant growth, from such pool surfaces, wherein the drawn liquid containing such residue or foreign matter is filtered to collect the debris. In other implementations, vehicle **30** may not collect such debris, wherein vehicle **30** merely loosens such debris on the pool surfaces such that the loosened or separated debris may be subsequently removed using the existing liquid filtering system of pool **22**.

To assist in the loosening of debris, in one implementation, vehicle **30** may additionally include a chemical dispenser to closely apply pool cleaning chemicals to the pool surfaces as the vehicle **30** traverses such surfaces. In one implementation, vehicle **30** may additionally or alternatively include one or more scrubbing members, such as active (driven) or passive (undriven or idling) brushes, to assist in the removal of residue or foreign matter from such pool surfaces. In yet another implementation, vehicle **30** may additionally or alternatively include liquid jets to assist in the loosening of debris.

To move along the submerged surfaces of pool **22**, vehicle **30** includes one or more propulsion mechanisms. In one implementation, vehicle **30** is propelled along the submerged pool surfaces using wheels, rollers, tracks or other surface contacting members powered by a motor and the like. Such wheels, rollers or tracks may themselves include the scrubbing members used to clean the surfaces. In one implementation vehicle **30** may also alternatively be propelled by means of the vacuum or liquid jets. The vacuum or liquid jets used for such propulsion nozzle facilitate loosening of debris for collection by vehicle **30**. In other implementations, vehicle **30** may include other propulsion mechanisms.

Cameras **32** comprise devices configured to capture video or time lapse images of pool **22**. In the example illustrated, cameras **32** are mounted on structures external to pool **22**. In other words, cameras **32** are not submerged. In other implementations, cameras **32** may alternatively be mounted to vehicle **30**. In the example illustrated, cameras **32** capture movement of vehicle **30** while vehicle **30** is submerged within pool **22**. In other implementations, cameras **32** merely capture images of submerged surfaces **26**, **28** of pool **22**.

In the example illustrated, cameras **32** comprise cameras serving as part of a home or pool security system, wherein such cameras detect the presence of a person at pool **22** satisfying a predefined characteristic and wherein an alert is output upon the person's detected presence. For example, in one implementation, cameras **32** are utilized as part of a security system that detects when a person below a predefined age, such as a child, is present at pool **22** without a detected presence of a recognized adult. In another implementation, cameras **32** may detect the presence of an unauthorized person or intruder at pool **22**. Identification of the person may be achieved by an off-site human or computerized monitoring system, wherein signals from cameras **32** are transmitted across a wide area network or may be achieved with software of controller **42** which includes facial recognition or other identification programming.

Because pool cleaning system **20** utilizes pre-existing cameras **32** provided as part of a security system or shares the use of cameras **32** with such a home or pool security system, pool cleaning system **20** is easier to set up, less complex and less expensive. In other implementations, pool cleaning system **20** may utilize dedicated cameras **22** independent of any cameras associated with a home, facility or pool security system. In such an alternative system, cameras **32** may be more precisely focused upon pool **22** and surfaces **26**, **28** while also including appropriate lenses or modifications to account for glare, refraction and the like to better facilitate the capture of surfaces and vehicle **30** which are submerged.

Controller **42** comprises one or more processing units in communication with vehicle **30** and cameras **32**. For purposes of this application, the term "processing unit" shall mean a presently developed or future developed processing unit that executes sequences of instructions contained in a memory. Execution of the sequences of instructions causes the processing unit to perform steps such as generating control signals. The instructions may be loaded in a random access

memory (RAM) for execution by the processing unit from a read only memory (ROM), a mass storage device, or some other persistent storage. In other embodiments, hard wired circuitry may be used in place of or in combination with software instructions to implement the functions described. For example, controller **42** may be embodied as part of one or more application-specific integrated circuits (ASICs). Unless otherwise specifically noted, the controller is not limited to any specific combination of hardware circuitry and software, nor to any particular source for the instructions executed by the processing unit.

In one implementation, controller **42** communicates with vehicle **30** and cameras **32** entirely across a wired connection. In another implementation, controller **42** communicates with vehicle **30** and cameras **32** across a wireless connection, such as cross a local area network (LAN) or a wide area network (WAN) such as the Internet. One of limitation, controller **42** may communicate with vehicle **30** and cameras **32** using a combination of both wired and wireless communication connections.

Controller **42** is configured to generate control signals for steering vehicle **30** based upon signals received from cameras **32**. In one implementation, controller **42** provides the sole steering directions for vehicle **30** using signals from cameras **32**. Because vehicle **30** is precisely steered under the control of controller **42**, rather than traveling in a random manner, entire summer surfaces of pool **22** may be more quickly and efficiently covered and cleaned. Because controller **42** provides the only steering instructions for vehicle **30** and utilizes signals from cameras **32**, complex steering algorithms or codes in either vehicle **30** or controller **42** may be omitted to reduce complexity and cost of system **20**.

In another implementation, vehicle **30** may cover or travel across surfaces of pool **22** in either a random fashion or according to an automated pool coverage algorithm or pool coverage pattern stored in a memory associated with vehicle **30** or controller **42**. In such an implementation, controller **42** utilizes signals from cameras **32** to verify that all of the surfaces of pool **22** have been cleaned, that no spots have been missed. Upon identifying a missed spot, controller **42** utilizes signals from camera **32** to steer vehicle **32** cover such missed portions of surfaces **26**, **28**. According to one example, controller **42** not only uses signals from camera **32** to determine whether any portions of surfaces **26**, **28** have been missed entirely, but to also determine whether any portions of surfaces **26**, **28** have been cleaned, but not to a satisfactory degree or extent. In such circumstances, controller **42** uses signals from cameras **32** to steer vehicle **34** such areas to re-clean such portions until such portions have been satisfactorily cleaned such that the portions have a cleanliness characteristic satisfying a predefined threshold.

FIG. **2** schematically illustrates pool cleaning system **120**, the particular example of pool cleaning system **20** described above. Pool cleaning system **120** is similar to pool cleaning system **20** except that pool cleaning system **120** additionally comprises dry station **46** and display **50**. Those remaining components of pool cleaning system **120** which correspond to components of pool cleaning system **20** are numbered similarly.

Dry station **46** comprise a station in communication with vehicle **30** and cameras **32** outside of pool **22**. Dry station **46** incorporates controller **42**. In one implementation, dry station **46** communicates with vehicle **30** in a wired fashion. In such an implementation, dry station **46** further provides electrical power to vehicle **30** in a wired fashion. Dry station **46** communicates with cameras **32** and either a wired or wireless fashion.

Display **50** comprises a device to present a graphical images and text on a display screen. In one implementation, display **58** may be incorporated as part of dry station **46**. In another implementation, display **50** may be provided on a portable electronic device, a computer, a television and the like. Display **50** is utilized by pool cleaning system **120** to present information regarding the cleaning of pool **22** to facilitate control of vehicle **30** by controller **42**. In one implementation, display **50** is utilized by pool cleaning system **120** and a controller **42** to present a graphical depiction of those portions of surfaces **26**, **28** of pool **22** have not been satisfactorily cleaned so as to satisfy a predefined cleanliness characteristic threshold. Such portions may comprise portions that have been completely missed by vehicle **30** as well as those portions that have been covered by vehicle **30** but have not been satisfactorily cleaned with the given number of passes of vehicle **30** or the existing cleaning settings of vehicle **30**. The graphical depiction presented on display **50** enables a person view the quality of the prior cleaning session and to input commands causing controller **42** to generate control signals using signals from camera **32** to steer vehicle **30** back to such identified portions where such portions may be cleaned at the same or elevated cleaning aggressiveness settings.

Another implementation, display **50** may be further utilized by controller **42** to depict the progress of vehicle **30** in cleaning pool **22**. Such a display **50** allows a person to visually determine how much of the pool has been currently cleaned and to estimate the remaining time before the pool cleaning task is completed. In certain circumstances, using display **50**, a person may adjust a setting of vehicle **30** to accelerate a rate at which surfaces **26**, **20** of pool **22** are cleaned to meet an earlier desired completion time for such pool cleaning.

FIG. **3** schematically illustrates pool cleaning system **220**, another example implementation of pool cleaning system **20**. Pool cleaning system **220** is similar to pool cleaning system **20** except that pool cleaning system **220** additionally comprises dry station **246**, display **50**, and remote server **254**. Those remaining components of pool cleaning system **220** which correspond to components of pool cleaning system **20** or pool cleaning system **120** are numbered similarly.

Dry station **246** is similar to dry station **46**, described above, except that dry station **246** serves as a local interface for communication with controller **42** across a network **260**. In one implementation, network **260** may comprise a local area network. In another implementation, network **260** may comprise a wide area network, such as the Internet. For example, in one implementation, dry station **246** may incorporate a modem. In one implementation, dry station **246** may communicate across a local area network to controller **42**. In another implementation, dry station **246** may communicate through a router, across a local area network, to a local modem which communicates across a network **260**. The example illustrated, dry station **246** further provides part of vehicle **30** across a wired cable or wired connection. Display **50** is described above with respect to system **120**.

Remote server **254** comprises a server remote from dry station **246** which is in communication with dry station **246** across network **260**. Remote server **254** includes controller **42**. During operation, signals from cameras **32** are transmitted across dry station **246** across network **260** to controller **42** of remote server **254**. Based upon such signals from cameras **32**, controller **42** generates control signals which are transmitted back across network **260** and through dry station **246** to vehicle **30** to steer vehicle **30**.

As shown by FIG. **3**, remote server **254** and network **260** may be shared as part of other pool cleaning systems **320**, wherein controller **42** generates control signals for steering the pool cleaning vehicle **30** of system **320** based upon signals from cameras **32** transmitted across dry station **246** of system **320**. In such an implementation, the cost and complexity of pool cleaning system **220** is reduced since controller **42** is remotely provided at remote server **254** which services multiple pool cleaning systems **220**, **320**. Upgrades to controller **42** and its software are also more easily achieved for all pool cleaning systems to **20**, **320** and their pools **22**, **222** being serviced. In one implementation, the supervised cleaning, inspection and possible re-cleaning facilitated by the use of cameras **32** may be provided as part of a subscription to users of vehicle **30**. In such an implementation, a pool **22** having security cameras **32** may be upgraded with appropriate software or an appropriate software module added to dry station **246** to make a network connection with controller **42** which directs the security cameras **32** to capture vehicle **3020** utilizes such signals for steering vehicle **30**.

FIG. **4** schematically illustrates pool cleaning system **420**, another particular implementation of pool cleaning system **20**. Pool cleaning system **420** is similar to pull cleaning system **120** except that pool cleaning system **420** additionally comprises a portable electronic device **464**. Those remaining components of pool cleaning system **420** which correspond to components of pool cleaning system **120** are numbered similarly.

Portable electronic device **464** comprises a portable handheld electronic device in communication with controller **42** and/or dry station **46** across network **260**. Examples of such a portable electronic device (PED) **300** include, but are not limited to, a smart phone, a personal data assistant (PDA), laptop, notebook computer, tablet computer (e.g. IPAD) and MP3 player (e.g., IPOD TOUCH). In the example illustrated, PED **464** comprises input **466** and display **468**.

Input **466** serves as a user interface for PED **464** by which inputs are made to PED **464**. Input **466** facilitates entry of inputs or commands by a person to cause controller **42** to generate control signals varying the control of vehicle **30**. In one implementation, input **466** comprise a keyboard. In other implementations, input **466** may comprise a touchpad, a stylus, a microphone with associated speech recognition software or programming, a touch screen, buttons, switches and the like. In some implementations, input **466** may comprise a touch screen incorporated as part of display **468**.

Display **468** comprises a user interface by which graphical or textual data is presented to a user. Display **468** may present the same or similar information as presented at dry station **246** by display **50** as described above. In one implementation, display **468** comprises a liquid crystal display. In other implementations, display **468** may comprise other types of display technology such as a light emitting diode display, an organic light emitting diode display (OLED), an electronic ink (e-ink) display or other types of display technology in present use or developed in the future. Although system **420** is illustrated as including controller **422** is part of dry station **46**, in some implementations, controller **42** may alternatively be located as part of PED **464**.

PED **464** enables a person located remote from pool **22** to monitor the progress of the cleaning of pool **22** by vehicle **30** of system **420**. PED **464** provides a person with a graphical presentation (described above with respect to display **50**) indicating those portions of surfaces **26**, **28** of pool **22** that have been completed as well as those portions **26**, **20** and that remain to be cleaned. The person may also be provided with a graphical indication of what portions need to be re-cleaned to meet predetermined cleanliness thresholds. In the example illustrated, input **466** enables a person to enter commands or selections which are transmitted across network **260** to controller **42** to adjust operation of vehicle **30**. For example, the path or route of vehicle **30** may be changed, the aggressiveness of the cleaning chemicals or mechanical cleaning devices may be adjusted, the speed at which vehicle **30** traverses surfaces **26**, **28** may be adjusted. In response to such adjustment signals from PED **464**, controller **42** may utilize signals from cameras **32** to adjust the steering of vehicle **30**.

FIG. **5** schematically illustrates pool cleaning system **520**, another example implementation of pool cleaning system **20**. Pool cleaning system **520** is similar to pool cleaning system **420** except that pool cleaning system **520** additionally comprises a remote server **554**. Those remaining components of pool cleaning system **520** which correspond to components of pool cleaning system **420** are numbered similarly.

Remote server **554** is similar to remote server **254** described above with respect to system **220**. Remote server **554** comprises a server remote from dry station **246** which is in communication with dry station **246** across network **260**. Remote server **254** includes controller **42**. During operation, signals from cameras **32** are transmitted across dry station **246** across network **260** to controller **42** of remote server **254**. Based upon such signals from cameras **32**, controller **42** generates control signals which are transmitted back across network **260** and through dry station **246** to vehicle **30** to steer vehicle **30**. Controller **42** further relays either the raw signals from camera **32** or image signals generated based upon signals from cameras **32** to PED **464**, wherein such images (described above) are presented on display **468**. As noted above, PED may further receive commands through input **466**, wherein such commands are transmitted to controller **42** which generates control signals that are ultimately transmitted to vehicle **30** for steering vehicle **30**.

As with remote server **254**, remote server **554** and network **260** may be shared as part of other pool cleaning systems **320** (shown in FIG. **3**), wherein controller **42** generates control signals for steering the pool cleaning vehicle **30** of system **320** based upon signals from cameras **32** transmitted across dry station **246** of system **320**. In such implementations, controller **42** of remote server **554** may interact with other PEDs **464**. In such an implementation, the cost and complexity of pool cleaning system **220** is reduced since controller **42** is remotely provided at remote server **254** which services multiple pool cleaning systems **220**, **320**. Upgrades to controller **42** and its software are also more easily achieved for all pool cleaning systems to **20**, **320** and their pools **22**, **222** being serviced. In one implementation, the supervised cleaning, inspection and possible re-cleaning facilitated by the use of cameras **32** may be provided as part of a subscription to users of vehicle **30**. In such an implementation, a pool **22** having security cameras **32** may be upgraded with appropriate software or an appropriate software module added to dry station **246** to make a network connection with controller **42** which directs the security cameras **32** to capture vehicle **3020** utilizes such signals for steering vehicle **30**. As indicated by broken lines, in other implementations, the controller **42** for generating control signals steering vehicle **30** based upon signals from cameras **32** may alternatively be relocated in PED **464**.

FIG. **6** is a flow diagram illustrating an example method **600** that may be carried out by any of systems **120-520**. As indicated by step **602**, cameras **32** capture images of pool cleaning by vehicle **30**. As indicated by step **604**, controller **42** obtain such signals from cameras **32** for the surfaces of pool **22** that have been cleaned. As indicated by step **606**, control-

ler **42** uses information gathered from the signals from cameras **32** to identify those portions of surfaces **26**, **28** not satisfactorily cleaned—not satisfying a predefined cleanliness characteristic or measurement threshold. One example of a cleanliness characteristic measurement a threshold may be how well the color of a surface matches a predetermined desirable color for the pool surface (such as original color of the tile or surface). A surface that has been missed entirely by vehicle **30** during a pool cleaning session may be automatically deemed to not satisfy a predetermined cleanliness characteristic.

As indicated by step **608**, based upon such determinations, controller **42** generates control signals resulting in the presentation of a graphical depiction of those portions of pool **22** that has not been satisfactorily cleaned. Such graphical representations or depictions may be presented on display **50** or display **468**. FIGS. **7** and **8** illustrate examples of graphical depictions that may be presented.

FIG. **7** illustrates display **468** presenting graphical depiction **620**. Graphical depiction **620** comprises a first graphic **622** having a first portion **624** representing sides or walls **28** of pool **22** and a second portion **626** representing the floor **26** of pool **22**. Graphical depiction **620** further comprises a moving icon **628** representing the current positioning of vehicle **30**. In one implementation, the path of vehicle **30** may additionally be depicted by icon **628** shown in broken lines. As shown by FIG. **7**, those portions **632** of surfaces **26**, **28** of pool **22** (shown in FIG. **1**) over which of vehicle **30** has moved are identified by graphical depiction **620** either by color, markings or other various distinctive attributes. Likewise, those portions **634** of surfaces **26**, **28** of pool **22** that have not been covered by vehicle **30** are identified by a distinct color col marking or distinctive attribute of depiction **620**. As a result, a person may view the current position of vehicle **30**, the extent to which pool **22** has been cleaned or covered by vehicle **30** and the extent of pool **22** that remains to be cleaned. In the example illustrated, depiction **620** further identifies those portions **638** of surfaces **26**, **28** that have been cleaned, but which have not been cleaned to a satisfactory degree or extent. In one implementation, portions **638** may be identified by colors, brightnesses, markings or other visually distinctive attributes that are visually distinct from both portions **632** and portions **634**. In other implementations, portions **638** may have the same characteristic of portions **634**. In yet other implementations, different portions **638** may have different visual attributes depending upon a degree to which such clean portions have failed to satisfy the predefined cleanliness characteristic threshold. In some implementations, different port **638** may have different visual attributes depending upon different cleaning strategies that may be recommended for the different portions **638**. For example, controller **42** may determine and recommend a first cleaning strategy (a first chemical solution jetted at a first rate and scrubbed at a first rate) with respect to a first portion **638** and may recommend a second different cleaning strategy (a second chemical solution jetted at a second rate is about a second rate) with respect to a second portion **638**, wherein the different cleaning strategies are represented by different visual attributes presented in depiction **620**.

FIG. **8** illustrates display **468** presenting a graphical depiction **720**. Graphical depiction **720** comprises a first graphic **622** having a first portion **624** representing sides or walls **28** of pool **22** and a second portion **626** representing the floor **26** of pool **22** (shown in FIG. **1**). Graphical depiction **720** is similar to graphical depiction **620** except that graphical depiction **720** omits icon **628** presenting vehicle **30**. Like depiction **620**, depiction **720** graphically depicts those portions **632** of surfaces **26**, **28** over which vehicle **30** has traveled while in a cleaning mode. Depiction **720** also visually depicts those portions **634** that have not been covered by vehicle **30** in the cleaning mode and those portions **638** over which vehicle **30** has traveled while in the cleaning mode, but which have not been cleaned to a satisfactory degree. As illustrated in FIG. **8**, different portions **638** may be visibly distinguished from one another through color, text or markings indicating either differences in the cleanliness of such portions **638** or indicating different recommended cleaning strategies or approaches that may be selected by a person using input **466** when vehicle **30** is steered back to such portions **638** for re-cleaning using signals from camera **32**.

As indicated by step **610** of FIG. **6**, controller **42** generates control signals steering vehicle **30** to re-clean portions of pool **22**, such as portions **638**. Such steering may be facilitated by using signals from cameras **32**. As noted above, in some implementations, a person may be allowed choose a cleaning approach for a particular portion **638** using input **466**. The selection may be facilitated by visual inspection of the different visual attributes for the particular portion **638** provided by depiction **720** (or depiction **620**). In some implementations, input **466** may additionally be utilized by a person to prioritize an order in which portions **638** are re-cleaned.

FIG. **9** illustrates pool cleaning system **820**, an example implementation of pool cleaning system **20**. Pool cleaning system **820** is similar to pool cleaning system **520** except the pool cleaning system **820** located controller **42** in dry station **246** and includes pool cleaning vehicle **830**, a specific example of vehicle **30**. As shown by FIG. **9**, in addition to transmitting control signals generated by controller **42** to vehicle **830**, dry station **246** further transmits power from power source **831** through a power line or power cable **833** to vehicle **830**. In the example illustrated, data communication and communication of control signals, also occurs across wired connections within or alongside the same line **833**. In the example illustrated, remote server **554** serves as a communication link by which upgrades to controller **42** may be implemented across a wide number of pool cleaning systems and by which information from controller **42** is conveyed to one or more portable electronic devices **464** across network **260**.

Vehicle **830** comprises a robotic or automated pool cleaning device. Vehicle **830** comprises a self-contained onboard filtration system with drive and pump motors. Vehicle **830** utilizes an internal microprocessor guided drive motor to systematically clean surfaces of pool **22**. As shown by FIGS. **9** and **10**, vehicle **830** utilizes a toothed track drive **900** provide traction and propulsion for vehicle **30**. Vehicle **830** comprises rotating brushes **902** to loosen waterline buildup and breakdown large debris while power washing jets **904** flush out dirt from pores, seems in corners where brushes **902** may not be able to reach. The loosened dirt and debris is vacuumed through off-center vacuum ports **906** which passes the vacuumed debris through internally house filter bag. In the example illustrated, vehicle **830** further comprises rollers **908** which inhibit vehicle **830** from becoming impeded or stuck on raised drains or pop-up heads. Although illustrated as being employed with system **820**, vehicle **830** may also be utilized with any of systems **20**, **120**, **220**, **320** and **420**. In other implementations, other robotic or automated pool cleaning vehicles may be utilized.

Although the present disclosure has been described with reference to example embodiments, workers skilled in the art will recognize that changes may be made in form and detail without departing from the spirit and scope of the claimed subject matter. For example, although different example

embodiments may have been described as including one or more features providing one or more benefits, it is contemplated that the described features may be interchanged with one another or alternatively be combined with one another in the described example embodiments or in other alternative embodiments. Because the technology of the present disclosure is relatively complex, not all changes in the technology are foreseeable. The present disclosure described with reference to the example embodiments and set forth in the following claims is manifestly intended to be as broad as possible. For example, unless specifically otherwise noted, the claims reciting a single particular element also encompass a plurality of such particular elements.

What is claimed is:

1. A pool cleaning system comprising:

a powered robotic surface cleaning vehicle to travel on and clean adjacent water containing surfaces of a pool while submerged within the pool;

a camera configured to capture movement of the vehicle while the vehicle is submerged within the pool;

a controller in electronic communication with the camera to generate control signals to steer the vehicle based on the signals from the camera; and

sensors, in electronic communication with the controller and carried by the vehicle, to sense the water containing surfaces of the pool after the water containing surfaces of the pool have been cleaned by the vehicle during a pass of the vehicle under control of a pool coverage algorithm, wherein the control signals steer the vehicle so as to reclean the water containing surfaces having a cleanliness characteristic that is sensed by the sensors and fails to satisfy a predefined threshold.

2. The system of claim **1** further comprising a station remote from the vehicle and in communication with the vehicle, wherein the station includes the controller.

3. The system of claim **1** further comprising a station remote from the vehicle and in communication with the vehicle, wherein the controller is located remote from the vehicle and the station.

4. The system of claim **1**, wherein the camera is mounted to the vehicle.

5. The system of claim **1** further comprising a portable electronic device having a display, wherein the portable electronic device is configured to present a graphic on the display, the graphic depicting water containing surfaces of the pool and those portions of the water containing surfaces that remain uncleaned as a vehicle traverses the water containing surfaces.

6. The system of claim **5**, wherein the portable electronic device depicts movement of the vehicle on the display.

7. The system of claim **1**, wherein the controller generates second control signals for steering the vehicle based on a coverage algorithm independent of signals from the camera, and wherein the control signals based on the captured coverage steer the vehicle to clean portions of the water containing surfaces missed by the vehicle while being steered according to the second control signals.

8. The system of claim **1**, wherein the camera is mounted remotely from the vehicle.

9. The system of claim **1** further comprising a portable electronic device having a display and in electronic communications with the vehicle.

10. The system of claim **1**, wherein the controller is located at a server remote from the camera and the vehicle.

11. An apparatus comprising:

a non-transitory computer-readable medium comprising code configured to cause a processor to:

generate first control signals for moving a robotic pool cleaning vehicle so as to clean water containing surfaces of a pool;

obtain signals from a camera representing the water containing surfaces of the pool and movement of a robotic pool cleaning vehicle adjacent to and along the water containing surfaces of the pool;

identify portions of the water containing surfaces of the pool that have not been cleaned by the pool cleaning vehicle to satisfy a predefined threshold; and

automatically generate second control signals to steer the robotic pool cleaning vehicle to reclean the identified portions of the water containing surfaces based upon the signals from the camera.

12. The apparatus of claim **11**, wherein the code is further configured to present a graphical depiction of the identified portions.

13. The apparatus of claim **12** further comprising a portable electronic device comprising:

a processing unit;

a display to present the graphical depiction; and

the non-transitory computer readable medium.

14. A method comprising:

moving a robotic pool cleaning vehicle so as to clean water containing surfaces of a pool;

capturing images of a pool being cleaned with a robotic pool cleaning vehicle operating according to a steering algorithm;

obtaining signals from a camera representing the water containing surfaces of the pool and movement of a robotic pool cleaning vehicle adjacent to and along the water containing surfaces of the pool;

identifying portions of the water containing surfaces of the pool that have not been cleaned by the pool cleaning vehicle to satisfy a predefined threshold; and

steering the robotic pool cleaning vehicle based upon signals from the camera to reclean the identified portions.

15. The method of claim **14** further comprising presenting a graphical depiction of the identified portions.

16. A pool cleaning system comprising:

a powered robotic pool cleaning vehicle to travel adjacent to water containing surfaces of a pool while submerged within the pool;

a camera configured to capture movement of the vehicle while the vehicle is submerged within the pool and identify debris located on the water containing surfaces;

a controller in electronic communication with the camera to generate control signals to steer the vehicle, wherein the controller automatically steers the robotic pool cleaning vehicle to reclean identified portions of the water containing surfaces still having debris based on the signals from the camera; and

a dry station remote from the pool and in communication with the vehicle.

17. The system of claim **16**, further comprising:

one or more processing units;

at least one non-transitory computer-readable medium comprising code configured to direct the one or more processing units to cause a portable electronic device to display coverage of the water containing surfaces of the pool by the vehicle.

18. The system of claim **16** further comprising sensors, in electronic communication with the controller and carried by the vehicle, to sense the water containing surfaces of the pool after the water containing surfaces of the pool have been cleaned by the vehicle during a pass of the vehicle under control of a pool coverage algorithm, wherein the control

signals steer the vehicle so as to reclean the water containing surfaces having a cleanliness characteristic that is sensed by the sensors and fails to satisfy a predefined threshold.

19. The system of claim **18**, wherein the camera comprises a pool security camera and wherein the at least one non-transitory computer-readable medium causes a portable electronic device to output an alert based on signals from the camera indicating presence of a person at pool satisfying a predefined characteristic.

20. The system of claim **16**, wherein the camera is mounted remotely from the vehicle.

21. The system of claim **16**, further comprising a server in communication with the dry station across a wide area network.

22. The system of claim **21**, further comprising a portable electronic device in communication with the server.

* * * * *

EXHIBIT H

US011828082B2

(12) **United States Patent**
Michelon et al.

(10) **Patent No.: US 11,828,082 B2**
(45) **Date of Patent: Nov. 28, 2023**

(54) **POOL CLEANING APPARATUS WITH OPTIMIZED CONTROL**

(71) Applicant: **ZODIAC POOL CARE EUROPE**, Bron (FR)

(72) Inventors: **Thierry Michelon**, Toulouse (FR); **Philippe Pichon**, Villeneuve de Riviere (FR)

(73) Assignee: **ZODIAC POOL CARE EUROPE**, Belberaud (FR)

(*) Notice: Subject to any disclaimer, the term of this patent is extended or adjusted under 35 U.S.C. 154(b) by 352 days.

(21) Appl. No.: **17/188,056**

(22) Filed: **Mar. 1, 2021**

(65) **Prior Publication Data**

US 2021/0198913 A1 Jul. 1, 2021

Related U.S. Application Data

(62) Division of application No. 15/572,293, filed as application No. PCT/FR2016/051060 on May 4, 2016, now Pat. No. 10,961,738.

(30) **Foreign Application Priority Data**

May 7, 2015 (FR) 1554125

(51) **Int. Cl.**
E04H 4/16 (2006.01)
G06T 7/44 (2017.01)

(52) **U.S. Cl.**
CPC ***E04H 4/1654*** (2013.01); ***G06T 7/44*** (2017.01); *E04H 4/1636* (2013.01)

(58) **Field of Classification Search**
CPC E04H 4/16; E04H 4/1654
See application file for complete search history.

(56) **References Cited**

U.S. PATENT DOCUMENTS

8,795,510 B2 * 8/2014 Porat E04H 4/1654 205/744
10,961,738 B2 3/2021 Michelon et al.
(Continued)

FOREIGN PATENT DOCUMENTS

EP	2607573	6/2013
EP	2835478	2/2015
WO	2016137886	9/2016

OTHER PUBLICATIONS

U.S. Appl. No. 15/572,293, Advisory Action dated Aug. 24, 2020, 3 pages.

(Continued)

Primary Examiner — Michael D Jennings
(74) *Attorney, Agent, or Firm* — Kilpatrick Townsend & Stockton LLP

(57) **ABSTRACT**

The invention relates to a pool cleaning apparatus including: a cleaning unit (**100**), at least one hydraulic system for circulating a liquid between at least one liquid inlet (**103**) and at least one liquid outlet (**104**) and through a filtration device of the cleaning unit (**100**), a pump suitable for forcing the circulation of water between the liquid inlet (**103**) and the liquid outlet (**104**) and through the filtration device, drive and guide means for moving the cleaning unit, and means for controlling said drive and guide means. The pool cleaning apparatus includes at least one debris detection means placed in the hydraulic system of the cleaning unit (**100**).

4 Claims, 2 Drawing Sheets

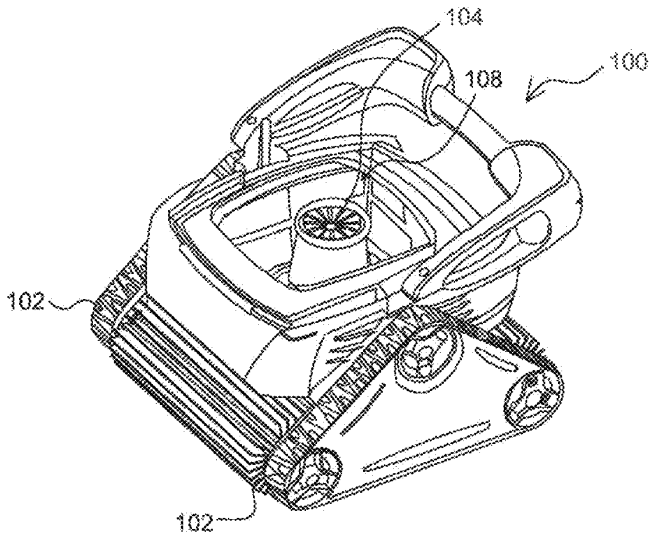

(56) **References Cited**

U.S. PATENT DOCUMENTS

2004/0040581	A1	3/2004	Bruwer	
2006/0053572	A1*	3/2006	Porat	C02F 1/4674 15/1.7
2013/0001074	A1*	1/2013	Porat	G06Q 20/3255 204/275.1
2013/0152970	A1*	6/2013	Porat	E04H 4/1654 134/18
2014/0166045	A1	6/2014	Herring	
2014/0339175	A1*	11/2014	Porat	E04H 4/1654 210/746
2015/0191927	A1	7/2015	Tavor et al.	
2016/0244988	A1	8/2016	Barcelos et al.	

OTHER PUBLICATIONS

U.S. Appl. No. 15/572,293, Final Office Action dated Aug. 7, 2020, 6 pages.
U.S. Appl. No. 15/572,293, Non-Final Office Action dated Dec. 10, 2019, 8 pages.
U.S. Appl. No. 15/572,293, Non-Final Office Action dated Dec. 14, 2020, 8 pages.
U.S. Appl. No. 15/572,293, Notice of Allowance dated Jan. 25, 2021, 5 pages.
Australian Application No. 2016257063, First Examination Report dated May 20, 2020, 5 pages.
Australian Application No. 2016257063, Notice of Acceptance dated Aug. 4, 2020, 3 pages.
European Application No. 16726922.4, Notice of Decision to Grant dated Feb. 6, 2020, 2 pages.
French Application No. 1554125, Search Report dated Mar. 10, 2016, 8 pages.
French Application No. 1554125, Office Action dated Oct. 23, 2019, 4 pages (2 pages of Original Document and 2 pages of English Translation).
French Application No. 1554125, Notice of Decision to Grant dated Jan. 10, 2020, 1 page.
International Application No. PCT/FR2016/051060, International Preliminary Report on Patentability dated Nov. 16, 2017, 14 pages (8 pages of Original Document and 6 pages of English Translation).
International Application No. PCT/FR2016/051060, International Search Report and Written Opinion dated Jul. 28, 2016, 17 pages (9 pages of Original Document and 8 pages of English Translation).

* cited by examiner

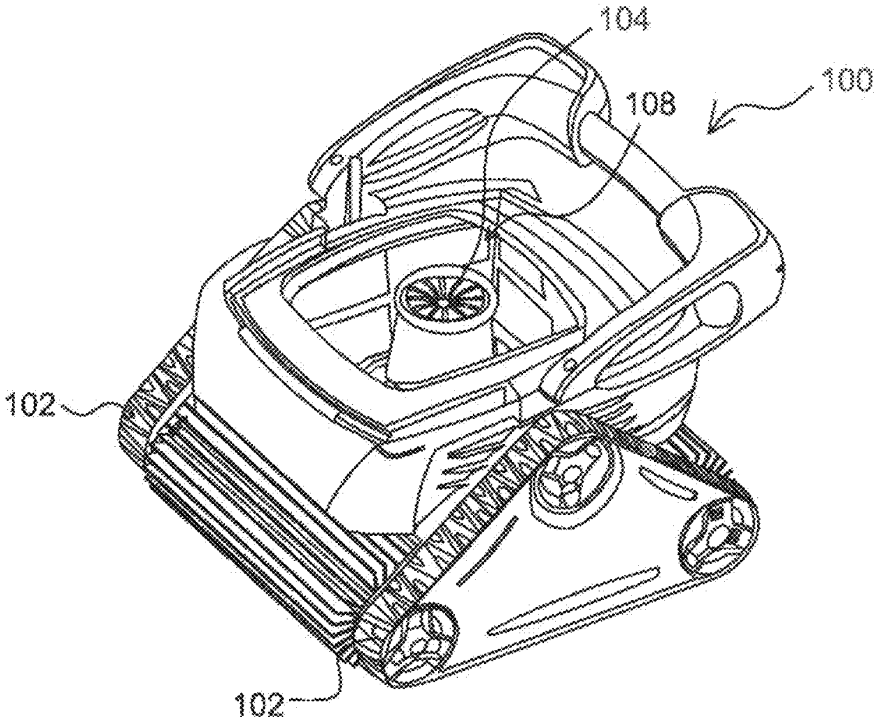
104
100
108
102
102

Fig.1

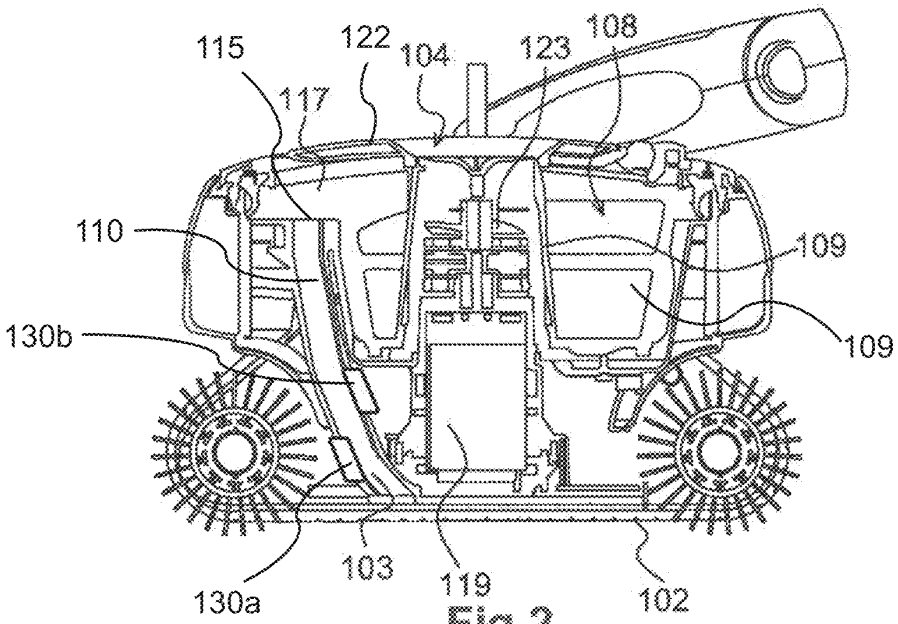
115
122
104
123
108
117
110
109
130b
109
130a
103
119
102

Fig.2

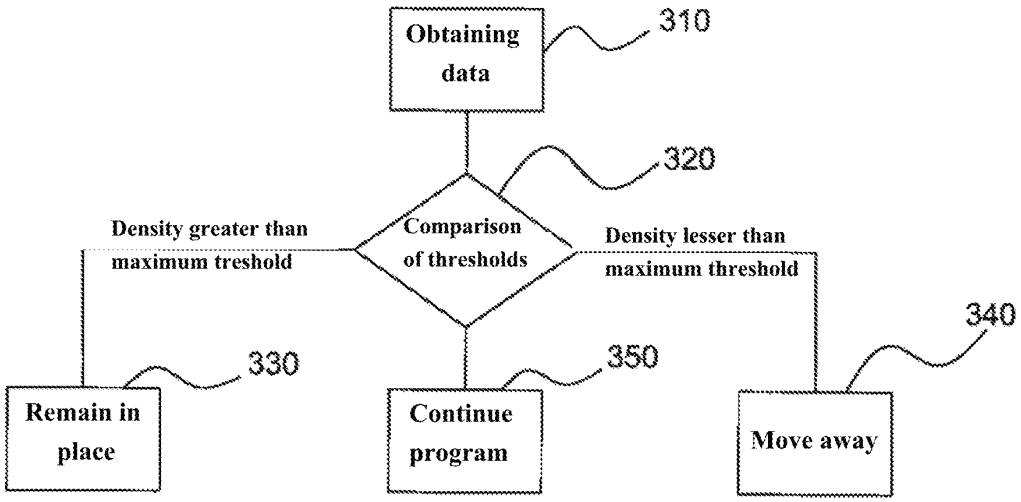
Obtaining data
310
320
Comparison of thresholds
Density greater than maximum treshold
Density lesser than maximum threshold
340
330
350
Remain in place
Continue program
Move away

Fig.3

POOL CLEANING APPARATUS WITH OPTIMIZED CONTROL

CROSS REFERENCE TO RELATED APPLICATIONS

This application is a division of U.S. patent application Ser. No. 15/572,293, filed on Feb. 13, 2018, which is a U.S. national phase under 35 U.S.C. § 371 of International Patent Application No. PCT/FR2016/051060, filed on May 4, 2016, which claims priority to French Patent Application No. 1554125 filed on May 7, 2015, the entire contents of each of which are incorporated herein by reference.

The present invention relates to the field of equipment for swimming pools. It relates more specifically to a swimming pool cleaning apparatus including means for optimizing control so as to improve the cleaning of the pool.

PREAMBLE AND PRIOR ART

The invention relates to an apparatus for cleaning a surface submerged in a liquid, such as a surface formed by the walls of a pool, in particular of a swimming pool. It is in particular a mobile swimming pool cleaning robot. Such a cleaning robot carries out said cleaning by travelling over the bottom and the walls of the swimming pool, brushing these walls and aspirating, into a filter, the debris that is present in the water or has been deposited on the walls. Debris is understood to be any particles that are present within the pool, such as fragments of leaves, micro-algae, etc., this debris normally being deposited on the bottom of the pool or stuck to the side walls thereof.

Most commonly, the robot is supplied with power through an electric cable that connects the robot to an external control and power supply unit.

Known in this field are, for example, the applicant's patents FR 2 925 557 and FR 2 925 551, which relate to a submerged-surface cleaning apparatus having a removable filter device. Such devices comprise a body, members for driving said body over the submerged surface, and a filtration chamber which is provided within the body and comprises a liquid inlet, a liquid outlet, a hydraulic circuit for liquid circulation between the inlet and the outlet, through a filter device. In these two patents, the filter device is removable in order to make it possible to empty the leaves and other debris without having to turn over the cleaning apparatus.

These apparatus have automatic programs for cleaning the bottom of the pool and optionally the side walls of the pool. Such a program, chosen by the user, determines cleaning of the swimming pool over a predetermined time, for example an hour and a half. The robot then travels through the swimming pool and has to be removed from the water by the user at regular intervals, when the filter is too full of particles (leaves, microparticles etc.). In recent models, the external control and power supply unit of the robot emits a signal when this filter cleaning operation has to be carried out.

It has been found that, on account, inter alia, of the geometry of the pool and of the position of the water inlets and skimmers in the pool, particles sometimes remain after a cleaning cycle. The same goes when the robot is held back by its cable and cannot travel freely over the entire surface of the swimming pool or when there is a region of the pool that has a shape conducive to significant agglomeration of debris (edge of diving well, for example).

Patent application EP 2607573, which is known from the prior art, targets the limitation of electrical consumption by

a robot for cleaning a swimming pool by modulation of the aspiration power of the pump. The modulation is carried out depending on dirt identified by the processing of images captured upstream of the aspiration mouth of the robot. This apparatus requires the implementation of expensive image capturing means; in addition, the image processing quality is likely to be adversely affected by variations in luminosity.

The aim of the invention is in particular to alleviate some of these drawbacks.

The invention aims in particular to propose a swimming pool cleaning apparatus that carries out optimized cleaning of the swimming pool in terms of cleaning time or cleanness of the water and the walls of the swimming pool after an operating cycle of the robot.

SUMMARY OF THE INVENTION

According to a first aspect, the invention relates to a swimming pool cleaning apparatus comprising:

- a cleaning unit intended to be submerged in the swimming pool,
- at least one hydraulic circuit for liquid circulation between at least one liquid inlet and at least one liquid outlet, through a filtration device of the cleaning unit, able to retain the debris present in the water,
- a pump designed to force water to circulate between at least one water inlet and at least one water outlet through the filtration device,
- driving and guiding means for producing the movements of the cleaning unit,
- control means for these driving and guiding means.

The cleaning apparatus comprises at least one means for detecting debris in the hydraulic circuit of the cleaning unit.

Debris is detected in particular by the density of said debris in the water being measured.

Density measurement is understood to mean both the measurement of the quantity of debris in suspension in the water, and/or the measurement of the size of this debris.

It is this debris that the cleaning apparatus is intended to extract from the pool, by detaching this debris from the walls or the bottom and then aspirating it and retaining it in the filter of the cleaning unit (also known as the cleaning robot).

It will be understood that this debris density measurement, for example at the inlet to the filtering hydraulic circuit, is representative of the local dirtiness of the pool. In this way, the control of the cleaning unit can include commands that take into account this local dirtiness of the pool, for example, by commanding the cleaning unit to remain for a longer time in the regions in which the measured debris density is high, and for less time in the regions of the pool in which the measured debris density is low.

In one particular embodiment, the means for measuring the density of debris are disposed at the water inlet into the filtering hydraulic circuit.

In this way, the measurement is carried out upstream of the filter and is thus not skewed by the filling level thereof.

In another embodiment, the apparatus also includes means for measuring the density of debris in the water at the water outlet of the filtering hydraulic circuit. In this way, it is possible to verify that the water at the outlet of the cleaning robot has been completely purified. If this is not the case, it is then possible either to command the cleaning unit to remain for a longer time at the same location, or to inform the user of the need to empty the filter.

In one particular embodiment of the means for measuring the density of debris, the latter include an optical sensor.

Advantageously, the means for measuring the density of debris include a turbidity sensor. A turbidity sensor is understood to be an apparatus which measures the solid particles in suspension in the water by measuring the quantity of light transmitted through the water.

In one embodiment, the turbidity sensor includes a calibrated light source and an optical sensor. Advantageously, the light source and the optical sensor can be disposed facing one another.

In another embodiment, which is optionally used in conjunction with the preceding embodiment, the means for measuring the density of debris include a camera and image analysis means, making it possible to determine the size and the nature of the aspirated debris.

In yet another embodiment, which is optionally used in conjunction with one of the two preceding embodiments, the means for measuring the density of debris include means for measuring the local resistivity of the water.

In another embodiment, the measurement means include a turbidimeter, of the type used in particular in dishwashers. In this way, the equipment is inexpensive to produce and makes use of a tried and tested material.

In one particular embodiment, the swimming pool cleaning apparatus also includes means for modifying the cleaning strategy of the cleaning unit in response to the detection of debris.

In this case, in various embodiments that are optionally used in conjunction, the means for modifying the cleaning strategy comprise:

- means for controlling the movements of the cleaning unit within the pool in response to the detection of debris,
- means for modifying the power of the pump in response to the detection of debris,
- means for transmitting information to a remote user in response to the detection of debris,
- means for transmitting the results of the detection of debris in the water to an external unit for controlling the apparatus.

According to a second aspect, the invention relates to a method for controlling a swimming pool cleaning apparatus as described above, this method including the following steps in a cyclical manner:

- data relating to the density of debris in the water at the inlet to the hydraulic circuit are obtained,
- these data are compared with a predetermined threshold,
- the cleaning strategy of the cleaning unit is modified if and as long as the estimated density of debris becomes greater than a maximum value chosen beforehand.

In one embodiment, the modification in the cleaning strategy includes at least one of the following operations:

- the movements of the cleaning unit within the pool are controlled in response to the detection of debris, in order to move the cleaning unit around in the vicinity of its current location in the swimming pool.

In this way, the cleaning unit will, for example, spend more time in the regions where the density of debris is greater than a predetermined threshold, or will increase its aspiration power in this region.

In one particular embodiment, which is optionally used in conjunction with the preceding embodiment, the method includes the following steps in a cyclical manner

- data relating to the density of debris in the water at the inlet to the filtering hydraulic circuit are obtained.
- the dirt density data are compared with at least one second predetermined threshold,
- the commands for moving the cleaning unit are modified if and as long as the estimated density of debris becomes less than a minimum value chosen beforehand, in order to move the cleaning unit away from its current location in the swimming pool.

In this way, the cleaning unit will spend less time in the regions where the density of debris is less than a predetermined threshold.

In one particular embodiment, the method also includes an initial step in which the cleaning unit travels rapidly through the swimming pool while acquiring density measurements, and at least one threshold is determined depending on the values measured during the rapid travel through the pool.

In this way, the method includes a phase of learning the normal level of debris in the pool during cleaning, and can adapt its top and bottom values depending on the average dirtiness measured. Specifically, a pool is usually much dirtier at the end of winter than during the normal season of use. The cleaning cycle can then take this situation into account.

All of the embodiments mentioned above can of course be combined in any technically feasible manner.

The invention also relates to a kit for modifying an assembly comprising a cleaning apparatus as described, and a control unit, said kit comprising an apparatus for detecting debris in the water, said apparatus being designed to be installed within the cleaning apparatus.

It optionally includes a program for controlling the apparatus, designed to be installed in the control unit and to implement a control method.

It is then possible to modify an existing piece of equipment so as to give it a control mode designed to emphasize cleaning in the dirtiest regions, and by contrast to spend less time in the cleanest regions. The installation of a sensor for measuring the density of debris in the filtering hydraulic circuit of the cleaning unit should be carried out by a professional, as should the updating of the control software within the control unit.

The invention also relates to a cleaning apparatus as described, including means for transmitting the results of the detection of debris in the water to an external unit for controlling the apparatus.

According to another aspect, the invention then relates more particularly to a cleaning set including a cleaning apparatus as described above and an external unit for controlling the apparatus, said cleaning set including means for transmitting the results of the detection of debris in the water to a control system for controlling the items of equipment of the swimming pool, and means for modifying the control thereof depending on the results of the detection of debris in the water.

PRESENTATION OF THE FIGURES

The features and advantages of the invention will be better appreciated by virtue of the following description, which describes the features of the invention by way of a nonlimiting example of application.

The description is based on the appended figures, in which:

FIG. **1** illustrates a perspective view of a swimming pool apparatus implementing a filtration system as described,

FIG. **2** illustrates a sectional side view of the same apparatus,

FIG. **3** illustrates a flowchart of the method for controlling the cleaning unit.

DETAILED DESCRIPTION OF ONE EMBODIMENT OF THE INVENTION

The invention finds its application in a swimming pool technical environment, for example a family-type swimming pool set into the ground.

A submerged-surface cleaning apparatus is shown, according to an embodiment that is given in this case by way of nonlimiting example, in FIGS. **1** and **2**. It includes a cleaning unit, referred to as swimming pool cleaning robot below, and a power supply and control unit for said swimming pool cleaning robot, said unit being situated outside the pool.

The swimming pool cleaning robot **100** comprises a body and a driving and guiding device comprising members **102** for driving and guiding the body over a submerged surface. In the present nonlimiting example, these driving and guiding means **102** are formed by wheels or caterpillar tracks disposed laterally on the body (see FIG. **1**).

The swimming pool cleaning robot **100** also comprises a motor that drives said driving and guiding members **102**, said motor being supplied with power via a cable. In one variant, the wheels or caterpillar tracks **102** are controllable independently of one another so as to be able to freely orient the cleaning robot on the walls of the swimming pool, in forward-running or reverse-running mode.

The swimming pool cleaning robot **100** has a hydraulic circuit including at least one liquid inlet **103** and a liquid outlet **104**. The liquid inlet **103** is, in the present nonlimiting example, situated at the base of the body (in other words under the latter, when the swimming pool cleaning robot is placed in its normal operating position at the bottom of the swimming pool), that is to say immediately next to a submerged surface over which the apparatus **100** moves in order to be able to aspirate the debris accumulated on said submerged surface. The liquid outlet **104** is situated on the top of the swimming pool cleaning robot **100**. In the present exemplary embodiment, the liquid outlet **104** is made in a direction substantially perpendicular to the guiding plane, that is to say vertically if the cleaning apparatus is resting on the bottom of the swimming pool.

The hydraulic circuit connects the liquid inlet **103** to the liquid outlet **104**. The hydraulic circuit is designed to be able to allow the liquid to circulate from the liquid inlet **103** towards the liquid outlet **104**. To this end, the apparatus comprises a pump comprising a motor **119** and an axial flow impeller **123** (see FIG. **2**), said motor **119** driving the axial flow impeller **123** in rotation, said axial flow impeller **123** being disposed in the hydraulic circuit.

In the present exemplary embodiment, the axial flow impeller **123** is disposed downstream of the filter—that is to say just upstream of the liquid outlet **104**.

The electric motor **119** drives the axial flow impeller **123** of the circulation pump and, optionally, the driving and guiding device.

The swimming pool cleaning robot **100** comprises a filtration chamber **108** that is interposed, in the hydraulic circuit, between the liquid inlet **103** and the liquid outlet **104**.

In the present exemplary embodiment, illustrated in particular in FIG. **1**, the filtration chamber **108** comprises a filtration basket **117** and a cover **122** forming the upper wall of the filtration chamber **108**.

The filtration basket **117** forms the bottom and the external and internal peripheral walls of the filtration chamber **108**.

The bottom and the external and internal peripheral walls of the filtration chamber **108** comprise at least one filtering wall **109**, the liquid contained in the filtration chamber **108** being evacuated towards the liquid outlet **104** through said central filtering wall **109**.

A pipe **110**, situated between the liquid inlet **103** into the hydraulic circuit and the liquid inlet **115** into the filtration chamber **108**, carries the water loaded with debris into the upper part of the filtration basket **117**.

In other exemplary embodiments, the pipe can be very short or even non-existent. In this case, the liquid inlet **103** of the hydraulic circuit is coincident with the liquid inlet **115** of the filtration chamber **108**.

The swimming pool cleaning robot **100** is supplied with power and with operating commands by means of a flexible cable. In the present example, this flexible cable is attached to the body of the swimming pool cleaning robot **100** in its upper part. This flexible cable is connected, at its other end, to the power supply and control unit (not illustrated in FIG. **1**) disposed outside the pool, this power supply and control unit being itself connected to the electrical mains supply.

The cleaning robot may also emit data to and receive data from the power supply and control unit. In the present example, the cleaning robot includes in particular means for detecting whether the fouling of the filter has exceeded a predetermined threshold, and for transmitting the data to the power supply and control unit in order to emit an alert to a user. In one exemplary embodiment, the swimming pool cleaning robot **100** includes a processor that is able to execute a predetermined algorithm that generates commands for moving the robot and for operating the filtration circuit.

This power supply and control unit also includes a control interface so that a user of the cleaning robot can choose, for example, a type of cleaning cycle, or can interrupt the operation of the robot.

In a variant embodiment, the power supply and control unit includes a processor that is able to execute a predetermined algorithm that generates commands for moving the swimming pool cleaning robot **100** and for operating the filtration circuit.

In this case, the swimming pool cleaning robot **100** includes at least one device **130***a*, **130***b* for detecting debris in the water (known as turbidimeter in the rest of the description). In the present exemplary embodiment, a turbidimeter **130** is disposed inside the hydraulic circuit, downstream of the water inlet **103** in position **130***a* or in the conduit **110** at position **130***b*.

In other embodiments, a plurality of turbidimeters are present, for example in the two locations **130***a*, **130***b* described above.

It is for example an optical sensor, associated with a computing means that detects variations in the opacity of the water. Such a device is then optionally associated with a calibrated light source. It is also possible, alternatively, to use a device based on resistivity measurements, or any other device known to a person skilled in the art that is designed to provide a measurement of the density of debris floating in the water at the inlet of the hydraulic circuit.

The turbidimeter can also be installed on the external surface of the robot body, or within a second water pipe that does not include a filter.

The turbidimeter sends measurement data continuously or at regular intervals (for example every few seconds) to the means for controlling the pumping, driving and guiding means.

Mode of Operation

As can be seen in FIG. **3**, which illustrates, in a nonlimiting manner, a flowchart of a method for controlling the

cleaning apparatus as described above, such a method includes for example the following steps:

310. Data relating to the density of debris in the water at the inlet to the hydraulic circuit are obtained,

320. These data are compared with at least one predetermined threshold,

330. The commands for moving the cleaning unit are modified if and as long as the estimated density of debris is greater than a maximum value chosen beforehand, in order to move the cleaning unit around in the vicinity of its current location in the swimming pool,

340. The commands for moving the cleaning unit are modified if and as long as the estimated density of debris is less than a minimum value chosen beforehand, in order to move the cleaning unit away from its current location in the swimming pool,

350. The previous control mode is maintained if and as long as the estimated density of debris is between the minimum and maximum values.

The commanded movements of the cleaning unit about its current position can consist of circles or of a spiral about this position, or even of movements of a fractal nature.

Similarly, the movement away can consist of a straight-line movement for a predetermined time, for example a few seconds, this corresponding to a distance of a few metres, typically six seconds corresponding to a movement away of around one metre.

In the absence of data received from the turbidimeter or of data departing from a predetermined range of values, the control method no longer takes into account the turbidimeter data, and returns to the usual control mode for a cleaning unit, such a control method being known to a person skilled in the art and departing as such from the scope of the present invention.

Variants

In another variant, the turbidimeter is installed a posteriori on a pre-existing cleaning unit, in the form of an upgrade kit. In this variant, the logic operation executed by the power supply and control unit is also modified to take into account the control modifications to be commanded according to the data received from the turbidimeter.

If a detection of particles at the outlet of the water circuit is observed, it is possible to send a message to the control unit, which can inform the user of an adaptation to the operation of the water filtration and treatment system.

If the control box of the robot can exchange data with the water filtration and treatment control boxes, the adjustment can be made automatically.

The invention claimed is:

1. Method for controlling a swimming pool cleaning apparatus wherein the method includes the following steps in a cyclical manner:

obtaining data relating to a density of debris in water in a vicinity of a hydraulic circuit and estimating density of debris,

comparing the estimated density of debris with at least one predetermined threshold, and

modifying a cleaning strategy of the swimming pool cleaning apparatus if and as long as the estimated density of debris is greater than the at least one predetermined threshold.

2. Controlling method according to claim **1**, wherein modifying the cleaning strategy includes at least one of the following operations:

controlling movements of the swimming pool cleaning apparatus within the swimming pool in response to a detection of debris, in order to move the swimming pool cleaning apparatus around in a vicinity of its current location in the swimming pool.

3. Controlling method according to claim **1**, wherein the method includes the following steps in a cyclical manner:

obtaining inlet data relating to the density of debris in the water at an inlet to the hydraulic circuit and estimating inlet density of debris,

comparing the estimated density of debris with at least one second predetermined threshold, and

modifying commands for moving the cleaning unit if and as long as the estimated inlet density of debris is less than the at least one second predetermined threshold, in order to move the cleaning unit away from its current location in the swimming pool.

4. Controlling method according to claim **1**, wherein the method also includes an initial step in which the cleaning unit travels rapidly through the swimming pool while acquiring density measurements, and the at least one predetermined threshold is determined depending on the density measurement values measured during the rapid travel through the pool.

* * * * *

EXHIBIT I

US011519732B2

(12) **United States Patent**
Newman et al.

(10) **Patent No.: US 11,519,732 B2**
(45) **Date of Patent: Dec. 6, 2022**

(54) **MAPPING AND TRACKING METHODS AND SYSTEMS PRINCIPALLY FOR USE IN CONNECTION WITH SWIMMING POOLS AND SPAS**

(71) Applicant: **ZODIAC POOL SYSTEMS LLC**, Carlsbad, CA (US)

(72) Inventors: **Phillip Newman**, Howick (ZA); **Abian van der Meijden**, Midrand (ZA); **Hendrikus Johannes van der Meijden**, Midrand (ZA)

(73) Assignee: **ZODIAC POOL SYSTEMS LLC**, Carlsbad, CA (US)

(*) Notice: Subject to any disclaimer, the term of this patent is extended or adjusted under 35 U.S.C. 154(b) by 486 days.

(21) Appl. No.: **16/541,104**

(22) Filed: **Aug. 14, 2019**

(65) **Prior Publication Data**

US 2020/0056890 A1 Feb. 20, 2020

Related U.S. Application Data

(60) Provisional application No. 62/719,867, filed on Aug. 20, 2018.

(51) **Int. Cl.**

G01C 21/20	(2006.01)
G01S 17/86	(2020.01)
E04H 4/16	(2006.01)
G01S 17/42	(2006.01)

(52) **U.S. Cl.**

CPC ***G01C 21/20*** (2013.01); ***E04H 4/1654*** (2013.01); ***G01S 17/42*** (2013.01); ***G01S 17/86*** (2020.01)

(58) **Field of Classification Search**

CPC . E04H 4/16; G01S 5/16; G01S 7/4813; G01S 17/89

See application file for complete search history.

(56) **References Cited**

U.S. PATENT DOCUMENTS

4,290,043	A *	9/1981	Kaplan	G01S 17/93 340/984
2006/0179934	A1*	8/2006	Smith	G01S 17/58 73/170.11
2014/0009748	A1*	1/2014	Leonessa	G05D 1/024 356/4.03
2018/0266134	A1*	9/2018	Pichon	H04N 5/247

(Continued)

FOREIGN PATENT DOCUMENTS

CN	108387234	8/2018
DE	102007053310	6/2009

(Continued)

OTHER PUBLICATIONS

International Application No. PCT/US2019/046583, International Preliminary Report on Patentability dated Mar. 4, 2021, 9 pages.

(Continued)

Primary Examiner — Rodney A Butler

(74) *Attorney, Agent, or Firm* — Kilpatrick Townsend & Stockton LLP

(57) **ABSTRACT**

Cleaning of a swimming pool may be facilitated by systems and methods for mapping a pool environment. Such mapping may occur in three dimensions when appropriate. At least some of the systems may include an apparatus for light detection and ranging (LIDAR) tethered to an automatic swimming pool cleaner.

12 Claims, 5 Drawing Sheets

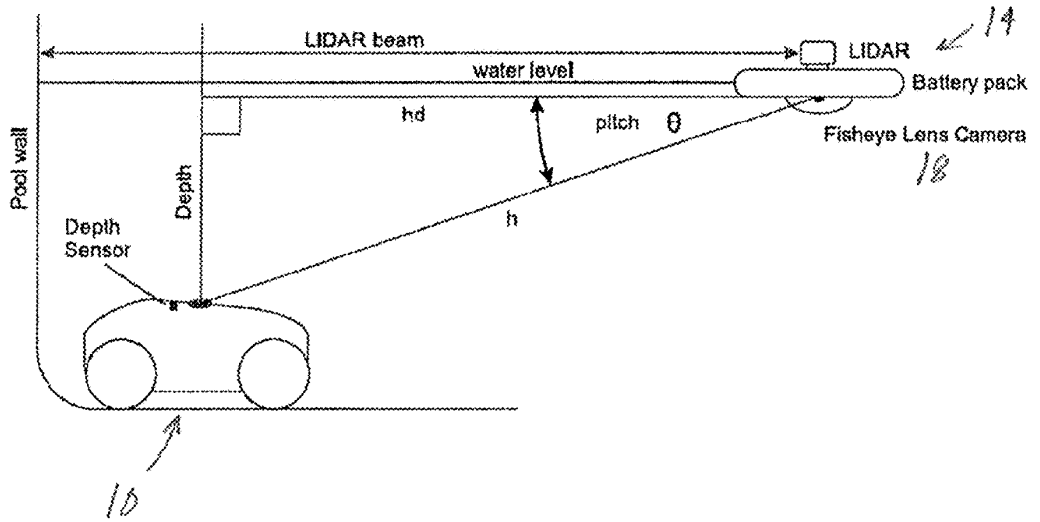

(56) **References Cited**

U.S. PATENT DOCUMENTS

2019/0243379	A1*	8/2019	Attar	E04H 4/1654
2020/0001723	A1*	1/2020	Durvasula	B60L 53/14
2020/0050215	A1*	2/2020	Kessler	A47L 11/4011

FOREIGN PATENT DOCUMENTS

EP	2960741	12/2015
EP	3282072	2/2018
WO	2008155178	12/2008
WO	2014004929	1/2014
WO	2018077870	5/2018

OTHER PUBLICATIONS

International Application No. PCT/US2019/046583, International Search Report and Written Opinion dated Nov. 28, 2019, 14 pages.

* cited by examiner

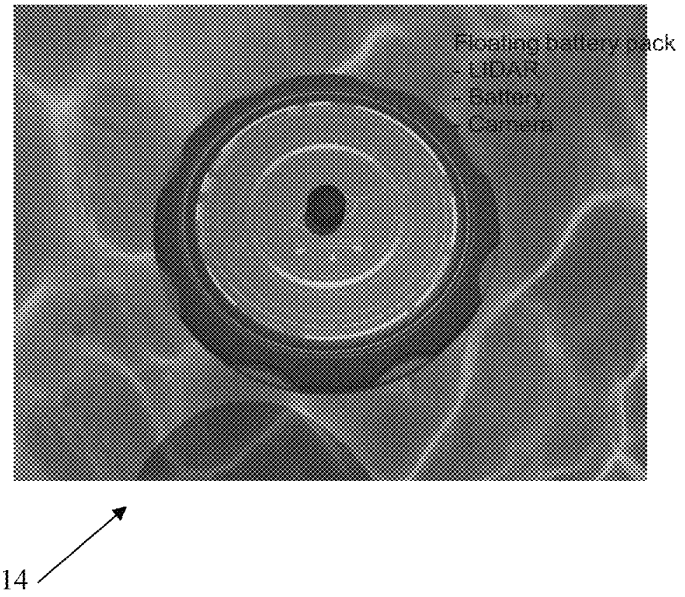

FIG. 1

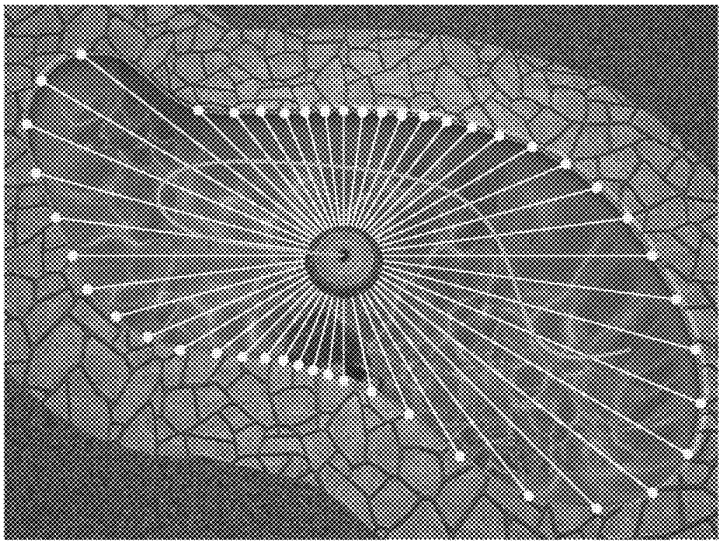

Path traced by floating LIDAR during SLAM in green

14

FIG. 2

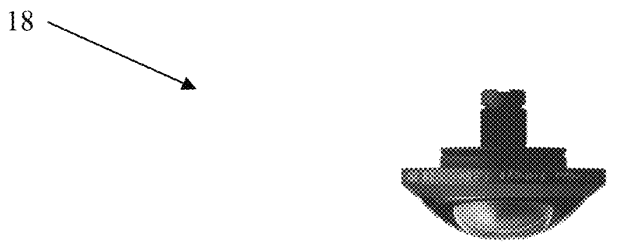

FIG. 3

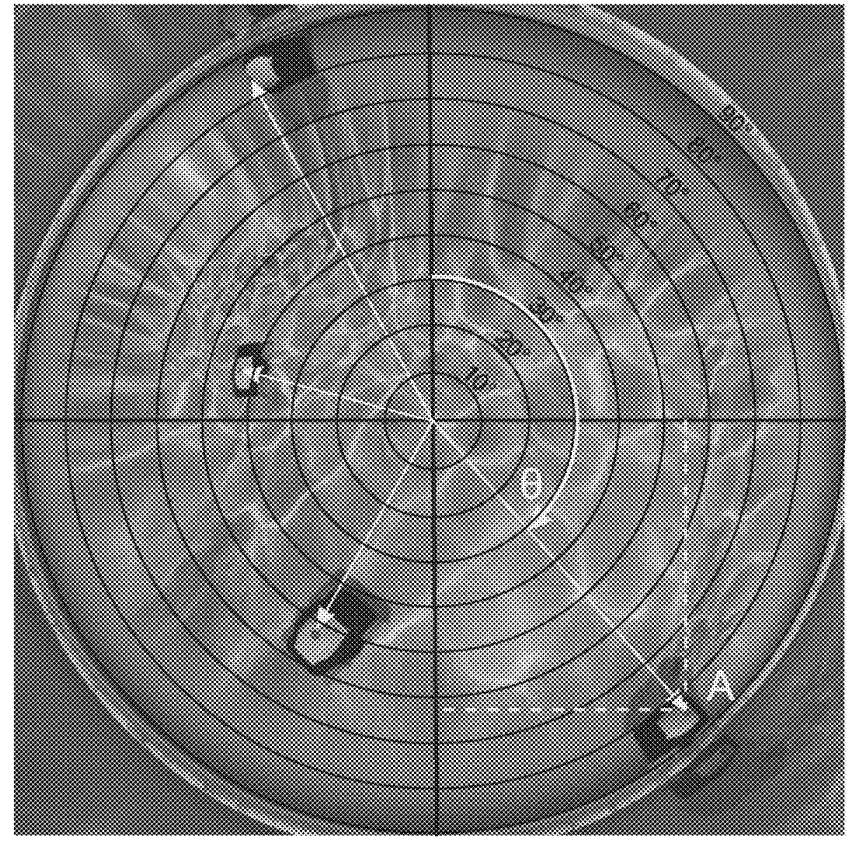

10

FIG. 4

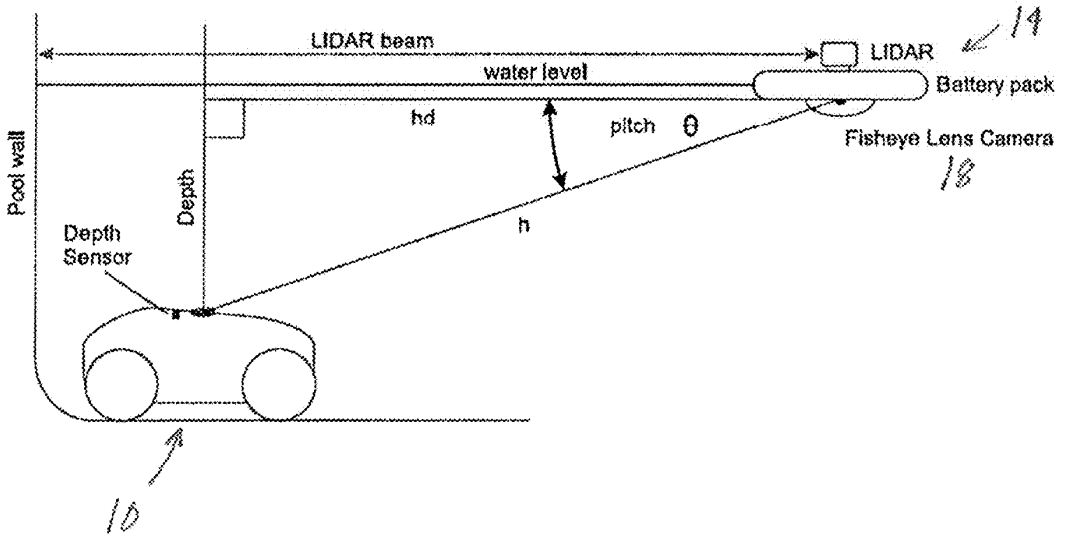
LIDAR beam
LIDAR
14
water level
Battery pack
hd
pitch θ
Fisheye Lens Camera
18
Pool wall
Depth
h
Depth
Sensor
10

FIG. 5

MAPPING AND TRACKING METHODS AND SYSTEMS PRINCIPALLY FOR USE IN CONNECTION WITH SWIMMING POOLS AND SPAS

CROSS-REFERENCE TO RELATED APPLICATION

This application claims the benefit of and priority to U.S. Provisional Patent Application Ser. No. 62/719,867, filed Aug. 20, 2018, and having the same title as appears above (the "Provisional Application"), the entire contents of which Provisional Application are hereby incorporated herein by this reference.

FIELD OF THE INVENTION

This invention relates to mapping and tracking systems and more particularly, although not necessarily exclusively, to systems for mapping characteristics of water-containing vessels such as swimming pools or spas and tracking positions of moveable equipment, such as an automatic pool cleaner ("APC"), within the vessels.

BACKGROUND OF THE INVENTION

European Patent Application No. 1122382 of Clementi (the "Clementi Application"), whose entire contents are incorporated herein by this reference, illustrates an APC capable of moving over to-be-cleaned surfaces of a swimming pool. Connected to the APC via a cable is a shuttle incorporating a battery, a microcontroller, and a signal transmitter and receiver. The shuttle, described in the Clementi Application as "a sort of floating 'island,'" floats on the surface of water within a swimming pool and is towed by the APC as the latter moves within the pool.

Absent from the shuttle of the Clementi Application is any capability of tracking location of the mobile APC within the pool. Similarly absent from the shuttle is any ability to track its own position within a pool or to determine any characteristics of the pool itself. Because all of this information is valuable in the context of efficiently and effectively cleaning vessels such as swimming pools and spas, it would be advantageous to develop methods and systems for obtaining some or all of it.

SUMMARY OF THE INVENTION

The present invention provides such methods and systems. In a general sense, the invention facilitates more efficient and cost-effective cleaning of swimming pools by mapping a pool environment in three dimensions, performing path planning for an APC, and assisting in navigating the APC along the planned paths. The APC may have an on-board power source for effecting autonomous movement within a pool as well as a pump to draw debris-laden pool water through a filter for cleaning, although components such as these alternatively may be located remote from the APC.

BRIEF DESCRIPTION OF THE DRAWINGS

FIG. **1** illustrates an exemplary floating object configured to facilitate mapping and tracking in connection with the present invention.

FIG. **2** schematically illustrates exemplary information which may be gleaned by a ranging sensor floating within a swimming pool.

FIG. **3** illustrates an exemplary camera that may be used in connection with the floating object of FIG. **1**.

FIG. **4** schematically illustrates exemplary positions of an APC relative to the camera of FIG. **3**.

FIG. **5** diagrammatically illustrates development of a three-dimension estimate of a position of an APC relative to the floating object of FIG. **1**.

DETAILED DESCRIPTION

Tethered to the APC **10** (see, e.g., FIGS. **4-5**) may be a floating object **14** configured to facilitate mapping and tracking. Advantageously, the tether may be or include a cable configured to convey electronic data between the APC **10** and the floating object **14**. The cable additionally may, in some cases, convey electrical power to the APC **10** as well, as advantageously the floating object **14** includes an on-board battery or other source of power both for it and for the APC **10**. One presently-preferred tether is a cable approximately 2.4 m in length, although persons skilled in the art will recognize that shorter or longer cables may be used instead. As the APC **10** moves within the pool, it tows the floating object along the water surface.

In some versions of the invention, the floating object **14** may include apparatus for light detection and ranging ("LIDAR"). As known to persons skilled in the relevant art, LIDAR constitutes methods of measuring distance to a target by illuminating the target with pulsed laser light and sensing the reflected pulses with a sensor. Presently preferred is that the LIDAR apparatus have a rotating time of flight ("ToF") ranging sensor projecting above the waterline of the pool (so as to send laser light through air, rather than water) that generally continuously collects data as it scans the walls forming the perimeter of a pool at and above the waterline. An exemplary such sensor rotates at approximately 5 Hz and collects approximately 500-1000 samples of ranging and angular data per cycle. The LIDAR apparatus thus may develop an accurate mapping of the pool perimeter as well as of its position within the perimeter of the pool.

FIG. **2** schematically illustrates exemplary distance and angle information which may be gleaned by rotating through 360° a ToF ranging sensor floating within a pool. Because rotation of the sensor through one revolution is materially faster than an APC **10** typically travels within a pool, linear movement of the tethered APC **10** either may be ignored or accounted for when obtaining distance and angle information for a particular cycle. In some versions of the invention, conventional techniques of simultaneous localization and mapping ("SLAM") may be employed in processing data obtained by the ToF ranging sensor of the LIDAR apparatus.

The floating object **14** additionally may include a camera **18** (see FIG. **3**) configured to record images of the APC **10** to which the object **14** is tethered. Advantageously, the camera **18** may have a "fish-eye" type of lens whose fields of view ("FOV") both horizontally and vertically are 180° (or approximately so). Similarly advantageously, the camera **18** is integrated into or attached to the floating object **14** facing downward into the water of the pool. The camera **18** is configured to record the underwater scene with the APC **10** constantly in view, which is possible due to the relatively short length of the cable. Conventional techniques of visual simultaneous localization and mapping ("VSLAM") may be utilized to process its image data.

In particular, the APC **10** may include any suitable marker (e.g., a red dot) on its body that the camera **18** may track continuously in its video frame. Preferably the marker is located on a top, central portion of the body, although it may be located elsewhere instead. The position of the marker as tracked through the camera **18** (by associated hardware or software, or both) may provide information as to the heading and pitch of the APC **10** relative to the LIDAR apparatus, samples of which are schematically depicted in FIG. **4**. Collectively, the LIDAR apparatus and camera **18** supply information sufficient to determine various dimensions and contours of the pool in which the object **14** is floating as well as certain information respecting locations of the APC **10** (in "x" and "y" coordinates) and the floating object **14** itself.

In some embodiments of the invention, the APC **10** includes a depth sensor configured to supply additional information (a "z" coordinate) as to its position within a pool. By utilizing depth information together with information as to marker heading and pitch angle, a three-dimensional estimate of the APC's position relative to the LIDAR apparatus may be obtained (see FIG. **5**). And because the position of the LIDAR apparatus within the pool relative to the pool walls is known via the ToF ranging sensor, an accurate determination of the location of the APC **10** within the pool may be made.

Yet additionally, the APC **10** may include an inertial measurement unit or other device configured to provide information as to how the APC **10** is tilted. Considered altogether, therefore, information gathered by the floating object **14** may supply accurate estimates of position and orientation of the APC **10** excluding its azimuth direction. Although the absolute direction the APC **10** is facing is not necessarily known if the APC **10** is stationary, such direction becomes apparent as soon as the APC **10** moves forward or backward from a particular position. Alternatively, azimuth direction could be set by use of a second marker located on the APC **10** at a distance from the other marker. Accordingly, at this point all relevant absolute position and orientation estimates may be obtained for the APC **10** relative to the pool, allowing precise pool mapping, path planning, and navigation. Any or all of this information, further, may be recorded and displayed in any suitable manner for evaluation by a pool user, pool equipment technician or manufacturer, or otherwise.

Moreover, the floating object **14** may perform some or all of the functions attributed to the shuttle of the Clementi Application. It thus may, if desired, include any or all of at least one battery, controller (including processing capabilities), and signal transmitter and receiver. The floating object **14** further could include components such as solar panels for charging the battery, for example.

Exemplary concepts or combinations of features of the invention may include:

A. A method of mapping a pool using a device floating on water within the swimming pool.

B. A method of mapping a swimming pool using a LIDAR apparatus.

C. A method of cleaning a swimming pool comprising (i) obtaining information from a sensor of a LIDAR apparatus and a camera positioned within the pool, (ii) processing the obtained information, and (iii) conveying navigation information via a cable to an APC travelling along a surface of the pool.

D. A cleaning system comprising: (i) a floating object comprising a LIDAR apparatus, (ii) an APC, and (iii) a cable connecting the LIDAR apparatus and the APC both mechanically and electronically.

These examples are not intended to be mutually exclusive, exhaustive, or restrictive in any way, and the invention is not limited to these exemplary embodiments but rather encompasses all possible modifications and variations within the scope of any claims ultimately drafted and issued in connection with the invention (and their equivalents). For avoidance of doubt, any combination of features not physically impossible or expressly identified as non-combinable herein may be within the scope of the invention.

Included in connection with the figures of the Provisional Application was at least the following text:

FIG. **1**: Floating battery pack
LIDAR
Battery
Camera

FIG. **2**: Basic SLAM (simultaneous localization and mapping) is continuously performed to establish the position and rotation of the floating LIDAR at any time. The rotational reference of the LIDAR is known relative to the first data sample at each 360° scan. Thus if the LIDAR is rotated in the pool, the rotation of the LIDAR base is also known relative to its starting rotation as long as SLAM calculations are ongoing.

FIG. **3**: Camera (180° FOV)

Attached to the floating LIDAR is a camera facing straight down which has a fish-eye lens with a horizontal and vertical field of view of 180°.

The camera records the underwater scene with the pool cleaner constantly in view. This is almost guaranteed because of its relatively short cable. There is a tracking marker on top and more or less on the center of the cleaner that is tracked continuously in the video frame. The position of the marker on the screen gives us the relative heading and pitch of the cleaner to the floating LIDAR.

FIG. **4**: Image showing various cleaner positions relative to the camera providing heading and pitch relative to the screen center.

FIG. **5**: The pool cleaner has a depth sensor. The depth information is applied to the marker heading and pitch angles which then gives us a 3 dimensional estimate relative to the floating LIDAR which in turn has an absolute reference to the pool outline (real world). This gives us an accurate estimate of where the pool cleaner is in the pool at any given point in time. Coupled to that the cleaner also has an IMU (inertial measurement unit) that provides tilt information. The above mentioned solution thus provides us with an accurate cleaner position and orientation estimation excluding its azimuth direction. The absolute direction that the pool cleaner is facing is not known if it is stationary but soon becomes apparent when it moves forward or backward from a previous position. Thus the solution finally provides an absolute position and orientation estimate relative to the pool. The above is sufficient for pool mapping, path planning and navigation.

Given a certain pitch angle θ and a depth one can determine h as well as hd horizontal distance from the LIDAR unit. Heading is also provided from the tracked marker in each camera frame.

Further, although applicant has described devices and techniques for use principally with swimming pools, persons skilled in the relevant field will recognize that the present invention may be employed in connection with other objects and in other manners. Variants of the invention, moreover, allow for use of one or more cameras on the top of the floating object in addition to (or instead of) the LIDAR apparatus to track fixed-location objects outside the pool as well as aid in mapping the pool perimeter. These fixed-

location objects could then serve as reference points for assessing the location of the floating object.

Other variants contemplate use of a more complex range of markers or fiducials placed on the APC and which are visible to the camera to allow determination, through image processing, of such things as direction and bank, pitch and roll angles. Yet alternatively, a camera may be placed on the APC to capture images of the floating island, to whose bottom surface one or more markers or fiducials have been attached, again facilitating determination of the relative positions of the APC and floating object. Furthermore, the camera and LIDAR apparatus may, if desired, be mounted on a weighted gimbal for image stability by assuring a much better vertical axis. The floating buoy may encounter some ripples or waves which may otherwise cause errors in accuracy of the readings taken by both the camera and the LIDAR apparatus, hence benefitting from the weighted gimbal mounting. Finally, references to "pools" and "swimming pools" herein may also refer to spas or other water-containing vessels used for recreation or therapy and for which mapping or tracking is needed or desired.

What is claimed is:

1. A cleaning system comprising: (a) a floating object comprising a LIDAR apparatus, (b) an automatic pool cleaner, and (c) a tether connecting the LIDAR apparatus and the automatic pool cleaner.

2. The cleaning system according to claim **1** in which the tether comprises a cable connecting the LIDAR apparatus and the automatic pool cleaner both mechanically and electronically.

3. The cleaning system according to claim **2** in which the floating object further comprises a camera.

4. The cleaning system according to claim **3** in which the LIDAR apparatus comprises a rotating ranging sensor projecting above a waterline of a swimming pool when the floating object is floating in the swimming pool.

5. The cleaning system according to claim **4** in which the camera faces downward into the swimming pool when the floating object is floating in the swimming pool.

6. The cleaning system according to claim **5** in which the automatic pool cleaner comprises a marker which the camera is configured to track.

7. The cleaning system according to claim **6** in which the automatic pool cleaner further comprises a depth sensor.

8. The cleaning system according to claim **7** in which the automatic pool cleaner further comprises a tilt sensor.

9. The cleaning system according to claim **8** in which the floating object further comprises a battery and a controller.

10. A method of cleaning a swimming pool comprising (a) obtaining information from a sensor of a LIDAR apparatus and a camera positioned within the swimming pool, (b) processing the obtained information, and (c) conveying navigation information via a cable to an automatic pool cleaner travelling along a surface of the swimming pool.

11. A method of mapping a swimming pool using a device floating on water within the swimming pool, wherein the device comprises a LIDAR sensor.

12. A method of mapping a swimming pool using a LIDAR apparatus.

* * * * *

EXHIBIT J

EXHIBIT J

Exemplary Infringement Claim Chart of U.S. Patent No. 11,800,207 by Wybot M2

U.S. Patent No. 11,880,207	Wybot M2 Vision Tech High-end Cordless Robotic Pool Cleaner
1. A self-propelled pool cleaning system for cleaning debris from a submerged surface of a swimming pool, comprising:	 https://www.wybotpool.com/products/wybot-m2-high-end-cordless-robotic-pool-cleaner-pre-order. https://www.youtube.com/watch?v=t2adPHauL3Y.

	WYBOTICS has dedicated intensive research and development effort to create the groundbreaking underwater vision recognition system for the WYBOT M2. The high-resolution camera, strategically positioned on the robot's front, incorporates the innovative "Dirt Hunting Mode." This technology allows the camera to navigate complex underwater environments, and focus on accurate detection, efficient elimination of debris and dirt, ensuring a thorough cleaning experience. The unique algorithm processes scanned pool images and garbage locations, allowing the robot to automatically plan the optimal route for targeted pool cleaning. https://www.prnewswire.com/news-releases/wybotics-unveils-groundbreaking-wybot-m2-at-ces-2024-worlds-first-cordlessly-self-docking-pool-cleaning-robot-with-underwater-vision-recognition-302035728.html
a. a vehicle body;	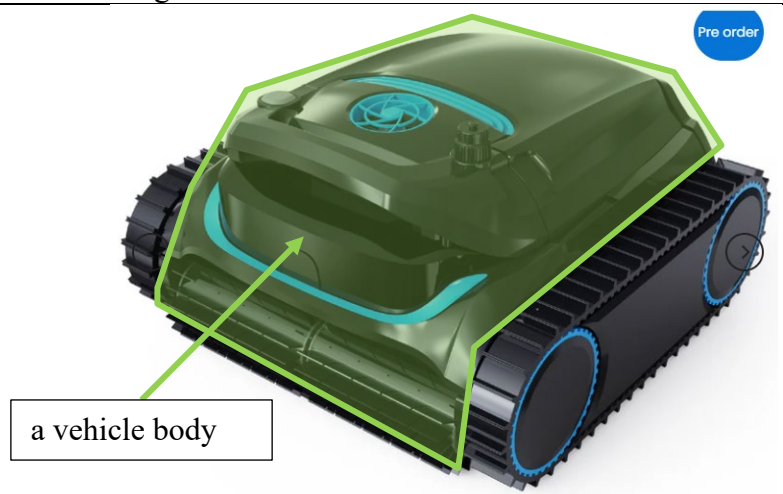

b. means for moving the vehicle body within the swimming pool;	
c. a filter configured to retain debris collected from the submerged surface;	**Specifications** Double-level Filtration 180μm+ultra-fine cotton foam https://www.wybotpool.com/products/wybot-m2-high-end-cordless-robotic-pool-cleaner-pre-order. https://www.wybotpool.com/pages/wybot-ces-2024.

d. at least one camera for capturing an image of at least a first object within the swimming pool; and	 https://www.wybotpool.com/products/wybot-m2-high-end-cordless-robotic-pool-cleaner-pre-order.

	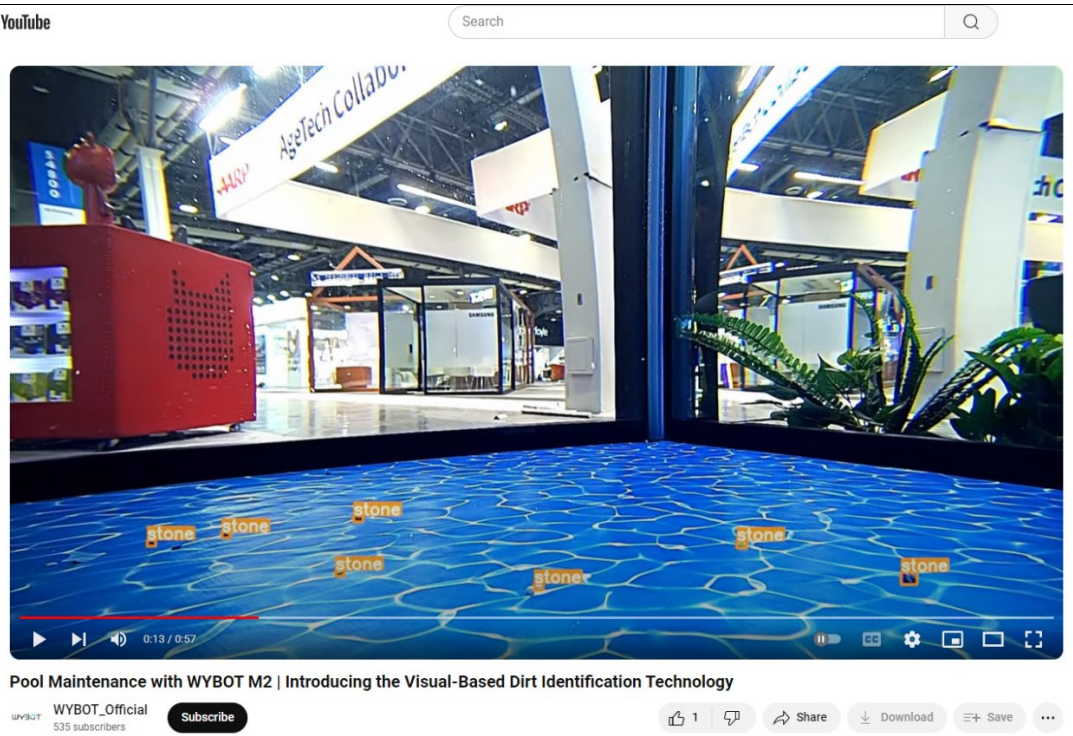 https://www.youtube.com/watch?v=t2adPHauL3Y. The high-resolution camera, strategically positioned on the robot's front, incorporates the innovative "Dirt Hunting Mode." This technology allows the camera to navigate complex underwater environments, and focus on accurate detection, efficient elimination of debris and dirt, ensuring a thorough cleaning experience. https://www.prnewswire.com/news-releases/wybotics-unveils-groundbreaking-wybot-m2-at-ces-2024-worlds-first-cordlessly-self-docking-pool-cleaning-robot-with-underwater-vision-recognition-302035728.html.

e. a controller (i) in electronic communication with the at least one camera and (ii) configured to generate, in response to the captured image, at least one control signal to cause movement of the body within the swimming pool to, or away from, the first object.	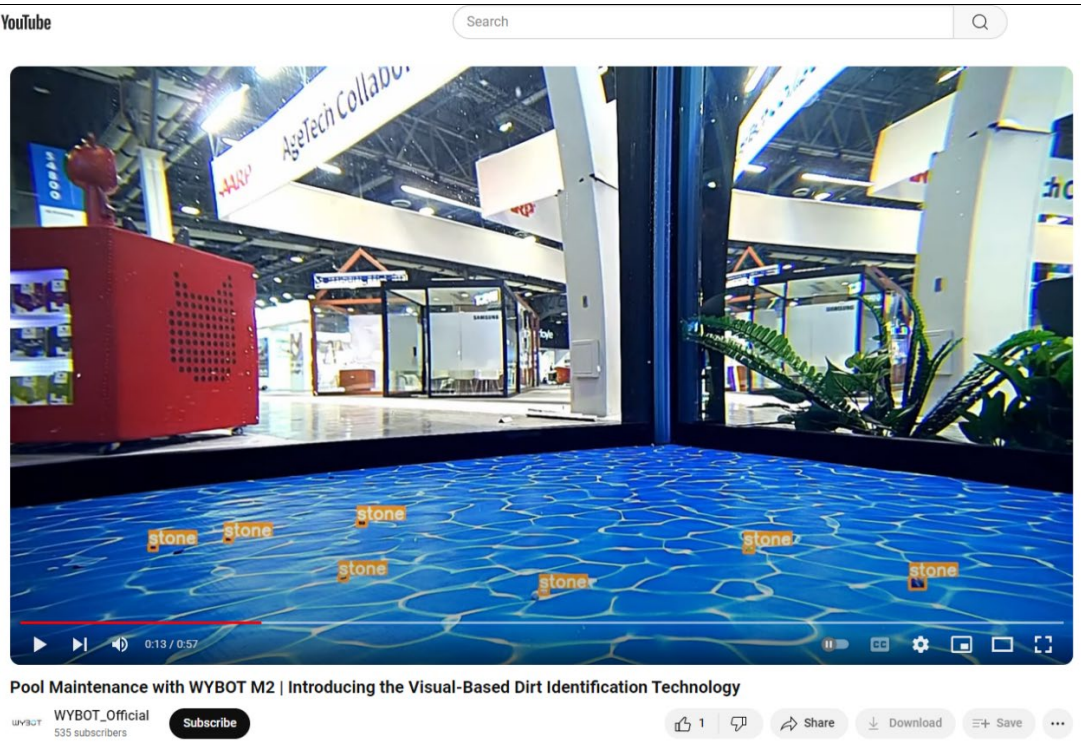 https://www.youtube.com/watch?v=t2adPHauL3Y. The high-resolution camera, strategically positioned on the robot's front, incorporates the innovative "Dirt Hunting Mode." This technology allows the camera to navigate complex underwater environments, and focus on accurate detection, efficient elimination of debris and dirt, ensuring a thorough cleaning experience. The unique algorithm processes scanned pool images and garbage locations, allowing the robot to automatically plan the optimal route for targeted pool cleaning. The promise of automated route planning based on processed data signals a significant step forward in cleaning precision. https://www.prnewswire.com/news-releases/wybotics-unveils-groundbreaking-wybot-m2-at-ces-2024-worlds-first-cordlessly-self-docking-pool-cleaning-robot-with-underwater-vision-recognition-302035728.html.