UNITED STATES PATENT AND TRADEMARK OFFICE

UNITED STATES DEPARTMENT OF COMMERCE
United States Patent and Trademark Office
Address: COMMISSIONER FOR PATENTS
P.O. Box 1450
Alexandria, Virginia 22313-1450
www.uspto.gov

APPLICATION NO.	ISSUE DATE	PATENT NO.	ATTORNEY DOCKET NO.	CONFIRMATION NO.
15/207,065	06/12/2018	9995051	214,790	6686

38137 7590 05/23/2018
ABELMAN, FRAYNE & SCHWAB
666 THIRD AVENUE, 10TH FLOOR
NEW YORK, NY 10017

ISSUE NOTIFICATION

The projected patent number and issue date are specified above.

Determination of Patent Term Adjustment under 35 U.S.C. 154 (b)
(application filed on or after May 29, 2000)

The Patent Term Adjustment is 47 day(s). Any patent to issue from the above-identified application will include an indication of the adjustment on the front page.

If a Continued Prosecution Application (CPA) was filed in the above-identified application, the filing date that determines Patent Term Adjustment is the filing date of the most recent CPA.

Applicant will be able to obtain more detailed information by accessing the Patent Application Information Retrieval (PAIR) WEB site (http://pair.uspto.gov).

Any questions regarding the Patent Term Extension or Adjustment determination should be directed to the Office of Patent Legal Administration at (571)-272-7702. Questions relating to issue and publication fee payments should be directed to the Application Assistance Unit (AAU) of the Office of Data Management (ODM) at (571)-272-4200.

APPLICANT(s) (Please see PAIR WEB site http://pair.uspto.gov for additional applicants):

Kameshwar Durvasula, Garfield, NJ;
AQUA PRODUCTS, INC., Cedar Grove, NJ;
William Londono Correa, Bloomfield, NJ;

The United States represents the largest, most dynamic marketplace in the world and is an unparalleled location for business investment, innovation, and commercialization of new technologies. The USA offers tremendous resources and advantages for those who invest and manufacture goods here. Through SelectUSA, our nation works to encourage and facilitate business investment. To learn more about why the USA is the best country in the world to develop technology, manufacture products, and grow your business, visit SelectUSA.gov.

PART B - FEE(S) TRANSMITTAL

Complete and send this form, togeth[illegible] [illegible]ith applicable fee(s), to: Mail Mail Stop I[illegible]E FEE
Commissioner for Patents
P.O. Box 1450
Alexandria, Virginia 22313-1450
or Fax (571)-273-2885

INSTRUCTIONS: This form should be used for transmitting the ISSUE FEE and PUBLICATION FEE (if required). Blocks 1 through 5 should be completed where appropriate. All further correspondence including the Patent, advance orders and notification of maintenance fees will be mailed to the current correspondence address as indicated unless corrected below or directed otherwise in Block 1, by (a) specifying a new correspondence address; and/or (b) indicating a separate "FEE ADDRESS" for maintenance fee notifications.

CURRENT CORRESPONDENCE ADDRESS (Note: Use Block 1 for any change of address)

38137 7590 02/23/2018
ABELMAN, FRAYNE & SCHWAB
666 THIRD AVENUE, 10TH FLOOR
NEW YORK, NY 10017

Note: A certificate of mailing can only be used for domestic mailings of the Fee(s) Transmittal. This certificate cannot be used for any other accompanying papers. Each additional paper, such as an assignment or formal drawing, must have its own certificate of mailing or transmission.

Certificate of Mailing or Transmission

I hereby certify that this Fee(s) Transmittal is being deposited with the United States Postal Service with sufficient postage for first class mail in an envelope addressed to the Mail Stop ISSUE FEE address above, or being facsimile transmitted to the USPTO (571) 273-2885, on the date indicated below.

(Depositor's name)
(Signature)
(Date)

APPLICATION NO.	FILING DATE	FIRST NAMED INVENTOR	ATTORNEY DOCKET NO.	CONFIRMATION NO.
15/207,065	07/11/2016	Kameshwar Durvasula	214,790	6686

TITLE OF INVENTION: POOL CLEANING SYSTEM AND METHOD TO AUTOMATICALLY CLEAN SURFACES OF A POOL USING IMAGES FROM A CAMERA

APPLN. TYPE	ENTITY STATUS	ISSUE FEE DUE	PUBLICATION FEE DUE	PREV. PAID ISSUE FEE	TOTAL FEE(S) DUE	DATE DUE
nonprovisional	UNDISCOUNTED	$1000	$0	$0	$1000	05/23/2018

EXAMINER	ART UNIT	CLASS-SUBCLASS
WONG, ALLEN C	2488	348-114000

1. Change of correspondence address or indication of "Fee Address" (37 CFR 1.363).
- ☐ Change of correspondence address (or Change of Correspondence Address form PTO/SB/122) attached.
- ☐ "Fee Address" indication (or "Fee Address" Indication form PTO/SB/47; Rev 03-02 or more recent) attached. **Use of a Customer Number is required.**

2. For printing on the patent front page, list
(1) The names of up to 3 registered patent attorneys or agents OR, alternatively,
(2) The name of a single firm (having as a member a registered attorney or agent) and the names of up to 2 registered patent attorneys or agents. If no name is listed, no name will be printed.

1 ABELMAN, FRAYNE &
2 SCHWAB
3

3. ASSIGNEE NAME AND RESIDENCE DATA TO BE PRINTED ON THE PATENT (print or type)

PLEASE NOTE: Unless an assignee is identified below, no assignee data will appear on the patent. If an assignee is identified below, the document has been filed for recordation as set forth in 37 CFR 3.11. Completion of this form is NOT a substitute for filing an assignment.

(A) NAME OF ASSIGNEE: Aqua Products, Inc.

(B) RESIDENCE: (CITY and STATE OR COUNTRY): Cedar Grove, New Jersey

Please check the appropriate assignee category or categories (will not be printed on the patent): ☐ Individual ☒ Corporation or other private group entity ☐ Government

4a. The following fee(s) are submitted:
- ☒ Issue Fee
- ☒ Publication Fee (No small entity discount permitted)
- ☐ Advance Order - # of Copies

4b. Payment of Fee(s): **(Please first reapply any previously paid issue fee shown above)**
- ☐ A check is enclosed.
- ☐ Payment by credit card. Form PTO-2038 is attached.
- ☒ The director is hereby authorized to charge the required fee(s), any deficiency, or credits any overpayment, to Deposit Account Number 01-0035 (enclose an extra copy of this form).

5. **Change in Entity Status** (from status indicated above)
- ☐ Applicant certifying micro entity status. See 37 CFR 1.29
- ☐ Applicant asserting small entity status. See 37 CFR 1.27
- ☐ Applicant changing to regular undiscounted fee status.

NOTE: Absent a valid certification of Micro Entity Status (see forms PTO/SB/15A and 15B), issue fee payment in the micro entity amount will not be accepted at the risk of application abandonment.

NOTE: If the application was previously under micro entity status, checking this box will be taken to be a notification of loss of entitlement to micro entity status.

NOTE: Checking this box will be taken to be a notification of loss of entitlement to small or micro entity status, as applicable.

NOTE: This form must be signed in accordance with 37 CFR 1.31 and 1.33. See 37 CFR 1.4 for signature requirements and certifications.

Authorized Signature [signature] Date May 5, 2018

Typed or printed name Steven M. Hertzberg Registration No. 41,834

PTOL-85 Part B (10-17) Approved for use through 10/31/2018 OMB 0651-0033 U.S. Patent and Trademark Office; U.S. DEPARTMENT OF COMMERCE

WYBOTICS EX1037
Wybotics v. Zodiac
Page 002

Electronic Patent Application Fee Transmittal

Application Number:	15207065
Filing Date:	11-Jul-2016
Title of Invention:	POOL CLEANING SYSTEM AND METHOD TO AUTOMATICALLY CLEAN SURFACES OF A POOL USING IMAGES FROM A CAMERA
First Named Inventor/Applicant Name:	Kameshwar Durvasula
Filer:	Steven M. Hertzberg/Steven Ortiz
Attorney Docket Number:	214,790

Filed as Large Entity

Filing Fees for Utility under 35 USC 111(a)

Description	Fee Code	Quantity	Amount	Sub-Total in USD($)
Basic Filing:				
Pages:				
Claims:				
Miscellaneous-Filing:				
Petition:				
Patent-Appeals-and-Interference:				
Post-Allowance-and-Post-Issuance:				

Description	Fee Code	Quantity	Amount	Sub-Total in USD($)
PUBL. FEE- EARLY, VOLUNTARY, OR NORMAL	1504	1	0	0
UTILITY APPL ISSUE FEE	1501	1	1000	1000
Extension-of-Time:				
Miscellaneous:				
			Total in USD ($)	**1000**

Electronic Acknowledgement Receipt

EFS ID:	32565292
Application Number:	15207065
International Application Number:	
Confirmation Number:	6686
Title of Invention:	POOL CLEANING SYSTEM AND METHOD TO AUTOMATICALLY CLEAN SURFACES OF A POOL USING IMAGES FROM A CAMERA
First Named Inventor/Applicant Name:	Kameshwar Durvasula
Customer Number:	38137
Filer:	Steven M. Hertzberg/Steven Ortiz
Filer Authorized By:	Steven M. Hertzberg
Attorney Docket Number:	214,790
Receipt Date:	08-MAY-2018
Filing Date:	11-JUL-2016
Time Stamp:	15:11:49
Application Type:	Utility under 35 USC 111(a)

Payment information:

Submitted with Payment	yes
Payment Type	DA
Payment was successfully received in RAM	$1000
RAM confirmation Number	050918INTEFSW00001841010035
Deposit Account	
Authorized User	

The Director of the USPTO is hereby authorized to charge indicated fees and credit any overpayment as follows:

File Listing:

Document Number	Document Description	File Name	File Size(Bytes)/ Message Digest	Multi Part /.zip	Pages (if appl.)
1	Issue Fee Payment (PTO-85B)	214790_IssueFee.pdf	131372 fe98d7e4e5be341f19265b74c85b1005199d7bf9	no	1
Warnings:					
Information:					
2	Fee Worksheet (SB06)	fee-info.pdf	32112 193cb0ae9c9b52e4daaa4531d1bc4286f4556a9e	no	2
Warnings:					
Information:					
		Total Files Size (in bytes):	163484		

This Acknowledgement Receipt evidences receipt on the noted date by the USPTO of the indicated documents, characterized by the applicant, and including page counts, where applicable. It serves as evidence of receipt similar to a Post Card, as described in MPEP 503.

New Applications Under 35 U.S.C. 111
If a new application is being filed and the application includes the necessary components for a filing date (see 37 CFR 1.53(b)-(d) and MPEP 506), a Filing Receipt (37 CFR 1.54) will be issued in due course and the date shown on this Acknowledgement Receipt will establish the filing date of the application.
National Stage of an International Application under 35 U.S.C. 371
If a timely submission to enter the national stage of an international application is compliant with the conditions of 35 U.S.C. 371 and other applicable requirements a Form PCT/DO/EO/903 indicating acceptance of the application as a national stage submission under 35 U.S.C. 371 will be issued in addition to the Filing Receipt, in due course.
New International Application Filed with the USPTO as a Receiving Office
If a new international application is being filed and the international application includes the necessary components for an international filing date (see PCT Article 11 and MPEP 1810), a Notification of the International Application Number and of the International Filing Date (Form PCT/RO/105) will be issued in due course, subject to prescriptions concerning national security, and the date shown on this Acknowledgement Receipt will establish the international filing date of the application.

UNITED STATES PATENT AND TRADEMARK OFFICE

UNITED STATES DEPARTMENT OF COMMERCE
United States Patent and Trademark Office
Address: COMMISSIONER FOR PATENTS
P.O. Box 1450
Alexandria, Virginia 22313-1450
www.uspto.gov

APPLICATION NO.	FILING DATE	FIRST NAMED INVENTOR	ATTORNEY DOCKET NO.	CONFIRMATION NO.
15/207,065	07/11/2016	Kameshwar Durvasula	214,790	6686

38137 7590 05/04/2018
ABELMAN, FRAYNE & SCHWAB
666 THIRD AVENUE, 10TH FLOOR
NEW YORK, NY 10017

EXAMINER
WONG, ALLEN C

ART UNIT	PAPER NUMBER
2488	

MAIL DATE	DELIVERY MODE
05/04/2018	PAPER

Please find below and/or attached an Office communication concerning this application or proceeding.

The time period for reply, if any, is set in the attached communication.

Response to Rule 312 Communication	Application No.	Applicant(s)
	15/207,065	DURVASULA ET AL.
	Examiner	**Art Unit**
	ALLEN WONG	2488

-- The MAILING DATE of this communication appears on the cover sheet with the correspondence address --

1. ☒ The amendment filed on *26 April 2018* under 37 CFR 1.312 has been considered, and has been:

a) ☐ entered.

b) ☒ entered as directed to matters of form not affecting the scope of the invention.

c) ☐ disapproved because the amendment was filed after the payment of the issue fee.
Any amendment filed after the date the issue fee is paid must be accompanied by a petition under 37 CFR 1.313(c)(1) and the required fee to withdraw the application from issue.

d) ☐ disapproved. See explanation below.

e) ☐ entered in part. See explanation below.

/ALLEN WONG/
Primary Examiner, Art Unit 2488

WYBOTICS EX1037
Wybotics v. Zodiac
Page 008

ATTY DOCKET: 214,790

IN THE UNITED STATES PATENT AND TRADEMARK OFFICE

APPLICANT	:	DURVASULA, et al.	Examiner	:	WONG, Allen C.
Serial No.	:	15/207,065	Art Unit	:	2488
Filed	:	July 11, 2016	Confirmation	:	6686
For	:	POOL CLEANING SYSTEM AND METHOD TO AUTOMATICALLY CLEAN SURFACES OF A POOL USING IMAGES FROM A CAMERA			

May 26, 2018

AMENDMENT UNDER 37 CFR §1.312

Mail Stop – Issue Fee
Commissioner for Patents
P.O. Box 1450
Alexandria, VA 22313-1450

OK TO ENTER: /A.W./

05/02/2018

Commissioner:

Subsequent to the Notice of Allowance dated February 23, 2018 and in response to the Notice to File Corrected Application Papers dated March 2, 2018, please amend and reconsider the above-identified patent application as follows:

Amendments to the Specification begin on page 2; and

Remarks begin on page 4 of this document.

WYBOTICS EX1037
Wybotics v. Zodiac
Page 009

IN THE UNITED STATES PATENT AND TRADEMARK OFFICE

APPLICANT	:	DURVASULA, et al.	Examiner	:	WONG, Allen C.
Serial No.	:	15/207,065	Art Unit	:	2488
Filed	:	July 11, 2016	Confirmation	:	6686
For	:	POOL CLEANING SYSTEM AND METHOD TO AUTOMATICALLY CLEAN SURFACES OF A POOL USING IMAGES FROM A CAMERA			

May 26, 2018

AMENDMENT UNDER 37 CFR §1.312

Mail Stop – Issue Fee
Commissioner for Patents
P.O. Box 1450
Alexandria, VA 22313-1450

Commissioner:

Subsequent to the Notice of Allowance dated February 23, 2018 and in response to the Notice to File Corrected Application Papers dated March 2, 2018, please amend and reconsider the above-identified patent application as follows:

Amendments to the Specification begin on page 2; and

Remarks begin on page 4 of this document.

WYBOTICS EX1037
Wybotics v. Zodiac
Page 010

In the Specification:

Please delete paragraph 005 of the specification of publication no. 2016/0319559 as set forth below, in its entirety, and in accordance with 37 C.F.R. § 1.121(b)(1)(iv).

[005] FIG. 2 is a schematic illustration …the pool cleaning system of FIG. 1.

Please replace paragraph 0024 of the specification (as set forth in the corresponding US publication no. 2016/031955) with the amended paragraph below as follows:

[0029] In another implementation, vehicle 30 may cover or travel across surfaces of pool 22 in either a random fashion or according to an automated pool coverage algorithm or pool coverage pattern stored in a memory associated with vehicle 30 or controller 42. In such an implementation, controller 42 utilizes signals from cameras 32 to verify that all of the surfaces of pool 22 have been cleaned, that no spots have been missed. Upon identifying a missed spot, controller 42 utilizes signals from camera 32 to steer vehicle 32 ~~cover~~ over such missed portions of surfaces 26, 28. According to one example, controller 42 not only uses signals from camera 32 to determine whether any portions of surfaces 26, 28 have been missed entirely, but to also determine whether any portions of surfaces 26,28 have been cleaned, but not to a satisfactory degree or extent. In such circumstances, controller 42 uses signals from cameras 32 to steer vehicle 34 such areas to re-clean such portions until such portions have been satisfactorily cleaned such that the portions have a cleanliness characteristic satisfying a predefined threshold.

Please replace paragraph 0033 of the specification (as set forth in the corresponding US publication no. 2016/031955) with the amended paragraph below as follows:

[0033] FIG. 4 schematically illustrates pool cleaning system 420, another particular implementation of pool cleaning system 20. Pool cleaning system 420 is similar to ~~pull~~ pool cleaning system 120 except that pool cleaning system 420 additionally comprises a portable electronic device 464. Those remaining components of pool cleaning system 420 which correspond to components of pool cleaning system 120 are numbered similarly.

WYBOTICS EX1037
Wybotics v. Zodiac
Page 012

REMARKS

This Amendment is intended as a full and complete response to the Notice to File Corrected Application Papers dated March 2, 2018. In the Notice, the Publication Branch states that paragraphs 004 and 005 of the specification are duplicates of each other. The Applicant acknowledges the inadvertent duplicity of the paragraphs and, by this Amendment, paragraph 005 is deleted in its entirety.

In addition, paragraphs 0029 and 0033 of the application, as set forth in publication no. 2016/0319559, have been amended to correct minor typographical errors. No new subject matter has been added to the application.

In view of the Amendment to the specification, it is submitted that the application is now in condition for allowance.

Conclusion

In view of the above amendment and the discussion presented herein, it is respectfully submitted that the present Amendment responds to all of the issues raised in the Notice to File Corrected Application Papers. Thus, it is submitted that the application is in condition for allowance. Accordingly, reconsideration of this application and its prompt passage to issue are earnestly solicited.

If the Examiner believes that there are any issues regarding this application that have not been completely addressed by this response, it is respectfully requested that the Examiner telephone the Applicant's representative, Steven M. Hertzberg, at (212) 885-9223 so that appropriate arrangements can be made for resolving such issues as expeditiously as possible.

It is submitted that no official fees are due by this submission. However, the Commissioner is hereby authorized to charge any fees, or to credit any overpayment, due by reason of this 1.312 Amendment to Deposit Account No. 01-0035.

Respectfully submitted,

/Steven M. Hertzberg/
Steven M. Hertzberg
Reg. No. 41,834, Attorney for Applicant

ABELMAN, FRAYNE & SCHWAB
666 Third Avenue, 10th Floor
New York, NY 10017
Direct Tel. (212) 885-9223
Customer No. 38,137

WYBOTICS EX1037
Wybotics v. Zodiac
Page 014

Electronic Acknowledgement Receipt

EFS ID:	32450868
Application Number:	15207065
International Application Number:	
Confirmation Number:	6686
Title of Invention:	POOL CLEANING SYSTEM AND METHOD TO AUTOMATICALLY CLEAN SURFACES OF A POOL USING IMAGES FROM A CAMERA
First Named Inventor/Applicant Name:	Kameshwar Durvasula
Customer Number:	38137
Filer:	Steven M. Hertzberg/Steven Ortiz
Filer Authorized By:	Steven M. Hertzberg
Attorney Docket Number:	214,790
Receipt Date:	26-APR-2018
Filing Date:	11-JUL-2016
Time Stamp:	11:23:53
Application Type:	Utility under 35 USC 111(a)

Payment information:

Submitted with Payment	no

File Listing:

Document Number	Document Description	File Name	File Size(Bytes)/ Message Digest	Multi Part /.zip	Pages (if appl.)
1	Amendment after Notice of Allowance (Rule 312)	214790_312_amendment.pdf	129224 e2fec361c11d85ca2fac33d3abd74794aee5e539	no	5

Warnings:

Information:	
Total Files Size (in bytes):	129224

This Acknowledgement Receipt evidences receipt on the noted date by the USPTO of the indicated documents, characterized by the applicant, and including page counts, where applicable. It serves as evidence of receipt similar to a Post Card, as described in MPEP 503.

New Applications Under 35 U.S.C. 111
If a new application is being filed and the application includes the necessary components for a filing date (see 37 CFR 1.53(b)-(d) and MPEP 506), a Filing Receipt (37 CFR 1.54) will be issued in due course and the date shown on this Acknowledgement Receipt will establish the filing date of the application.
National Stage of an International Application under 35 U.S.C. 371
If a timely submission to enter the national stage of an international application is compliant with the conditions of 35 U.S.C. 371 and other applicable requirements a Form PCT/DO/EO/903 indicating acceptance of the application as a national stage submission under 35 U.S.C. 371 will be issued in addition to the Filing Receipt, in due course.
New International Application Filed with the USPTO as a Receiving Office
If a new international application is being filed and the international application includes the necessary components for an international filing date (see PCT Article 11 and MPEP 1810), a Notification of the International Application Number and of the International Filing Date (Form PCT/RO/105) will be issued in due course, subject to prescriptions concerning national security, and the date shown on this Acknowledgement Receipt will establish the international filing date of the application.

UNITED STATES PATENT AND TRADEMARK OFFICE

UNITED STATES DEPARTMENT OF COMMERCE
United States Patent and Trademark Office
Address: COMMISSIONER FOR PATENTS
P.O. Box 1450
Alexandria, Virginia 22313-1450
www.uspto.gov

APPLICATION NO.	FILING DATE	FIRST NAMED INVENTOR	ATTORNEY DOCKET NO.	CONFIRMATION NO.
15/207,065	07/11/2016	Kameshwar Durvasula	214,790	6686

38137 7590 03/02/2018
ABELMAN, FRAYNE & SCHWAB
666 THIRD AVENUE, 10TH FLOOR
NEW YORK, NY 10017

EXAMINER
WONG, ALLEN C

ART UNIT	PAPER NUMBER
2488	

MAIL DATE	DELIVERY MODE
03/02/2018	PAPER

Please find below and/or attached an Office communication concerning this application or proceeding.

The time period for reply, if any, is set in the attached communication.

UNITED STATES PATENT AND TRADEMARK OFFICE

Commissioner for Patents
United States Patent and Trademark Office
P.O. Box 1450
Alexandria, VA 22313-1450
www.uspto.gov

Application No. : 15207065
Applicant : Durvasula
Filing Date : 07/11/2016
Date Mailed : 03/02/2018

NOTICE TO FILE CORRECTED APPLICATION PAPERS

Notice of Allowance Mailed

This application has been accorded an Allowance Date and is being prepared for issuance. The application, however, is incomplete for the reasons below.

Applicant is given two (2) months from the mail date of this Notice within which to respond. This time period for reply is extendable under 37 CFR 1.136(a) for only TWO additional MONTHS.

The informalities requiring correction are indicated in the attachment(s). If the informality pertains to the abstract, specification (including claims) or drawings, the informality must be corrected with an amendment in compliance with 37 CFR 1.121 (or, if the application is a reissue application, 37 CFR 1.173). Such an amendment may be filed after payment of the issue fee if limited to correction of informalities noted herein. See Waiver of 37 CFR 1.312 for Documents Required by the Office of Patent Publication, 1280 Off. Gaz. Patent Office 918 (March 23, 2004). In addition, if the informality is not corrected until after payment of the issue fee, for purposes of 35 U.S.C. 154(b)(1)(iv), "all outstanding requirements" will be considered to have been satisfied when the informality has been corrected. A failure to respond within the above-identified time period will result in the application being ABANDONED.

See attachment(s).

A copy of this notice MUST be returned with the reply. Please address response to "Mail Stop Issue Fee, Commissioner for Patents, P.O. Box 1450, Alexandria, VA 22313-1450".

/Chris Harmon/
Publication Branch
Office of Data Management
(571) 272-4200

Application No. 15207065

IDENTIFICATION OF SPECIFICATION/DRAWING INCONSISTENCIES

☐ On Page of the specification there is a brief description of FIG. , but the drawings filed do not include a drawing with that designation. Applicant must respond either by supplying the omitted drawing or by amending the specification to remove all references to that drawing.

☐ The drawings filed include FIG. , but the specification's brief description of the drawings does not describe a drawing with that designation. Applicant must respond either by amending the specification to add a brief description of that drawing or by correcting the drawings to remove the drawing in question.

☐ In the utility application, drawings are present in the application and are referred to in the detailed description of the invention, but the specification does not contain a brief description of the several views as required by 37 CFR 1.74 and 37 CFR 1.77(b)(9).

☐ The design application does not contain a description of the figure or figures of the drawing as required by 37 CFR 1.153(a) and 37 CFR 1.154(b)(4).

☐ In the plant application, the specification does not contain a brief description of the drawing as required by 37 CFR 1.163(c)(8).

☐ Page of the specification refers to FIG. , but no drawing with that designation is described in the brief description of the drawings and no drawing with that designation is present in the application. Applicant must respond either by amending the specification to remove all references to that drawing, or by supplying that drawing and amending the specification to add a brief description of it.

☐ In the reissue application, FIG. , is labeled as "New" but is not described in the reissue specification's brief description of the drawings. Applicant must respond by amending the reissue specification's brief description of the drawings to add a brief description of the new drawing.

☐ OTHER:

☒ COMMENTS:
Fig. 2 is duplicated in the Brief Description of the Drawings.

UNITED STATES PATENT AND TRADEMARK OFFICE

UNITED STATES DEPARTMENT OF COMMERCE
United States Patent and Trademark Office
Address: COMMISSIONER FOR PATENTS
P.O. Box 1450
Alexandria, Virginia 22313-1450
www.uspto.gov

NOTICE OF ALLOWANCE AND FEE(S) DUE

38137 7590 02/23/2018
ABELMAN, FRAYNE & SCHWAB
666 THIRD AVENUE, 10TH FLOOR
NEW YORK, NY 10017

EXAMINER
WONG, ALLEN C

ART UNIT	PAPER NUMBER
2488	

DATE MAILED: 02/23/2018

APPLICATION NO.	FILING DATE	FIRST NAMED INVENTOR	ATTORNEY DOCKET NO.	CONFIRMATION NO.
15/207,065	07/11/2016	Kameshwar Durvasula	214,790	6686

TITLE OF INVENTION: POOL CLEANING SYSTEM AND METHOD TO AUTOMATICALLY CLEAN SURFACES OF A POOL USING IMAGES FROM A CAMERA

APPLN. TYPE	ENTITY STATUS	ISSUE FEE DUE	PUBLICATION FEE DUE	PREV. PAID ISSUE FEE	TOTAL FEE(S) DUE	DATE DUE
nonprovisional	UNDISCOUNTED	$1000	$0	$0	$1000	05/23/2018

THE APPLICATION IDENTIFIED ABOVE HAS BEEN EXAMINED AND IS ALLOWED FOR ISSUANCE AS A PATENT. PROSECUTION ON THE MERITS IS CLOSED. THIS NOTICE OF ALLOWANCE IS NOT A GRANT OF PATENT RIGHTS. THIS APPLICATION IS SUBJECT TO WITHDRAWAL FROM ISSUE AT THE INITIATIVE OF THE OFFICE OR UPON PETITION BY THE APPLICANT. SEE 37 CFR 1.313 AND MPEP 1308.

THE ISSUE FEE AND PUBLICATION FEE (IF REQUIRED) MUST BE PAID WITHIN THREE MONTHS FROM THE MAILING DATE OF THIS NOTICE OR THIS APPLICATION SHALL BE REGARDED AS ABANDONED. THIS STATUTORY PERIOD CANNOT BE EXTENDED. SEE 35 U.S.C. 151. THE ISSUE FEE DUE INDICATED ABOVE DOES NOT REFLECT A CREDIT FOR ANY PREVIOUSLY PAID ISSUE FEE IN THIS APPLICATION. IF AN ISSUE FEE HAS PREVIOUSLY BEEN PAID IN THIS APPLICATION (AS SHOWN ABOVE), THE RETURN OF PART B OF THIS FORM WILL BE CONSIDERED A REQUEST TO REAPPLY THE PREVIOUSLY PAID ISSUE FEE TOWARD THE ISSUE FEE NOW DUE.

HOW TO REPLY TO THIS NOTICE:

I. Review the ENTITY STATUS shown above. If the ENTITY STATUS is shown as SMALL or MICRO, verify whether entitlement to that entity status still applies.

If the ENTITY STATUS is the same as shown above, pay the TOTAL FEE(S) DUE shown above.

If the ENTITY STATUS is changed from that shown above, on PART B - FEE(S) TRANSMITTAL, complete section number 5 titled "Change in Entity Status (from status indicated above)".

For purposes of this notice, small entity fees are 1/2 the amount of undiscounted fees, and micro entity fees are 1/2 the amount of small entity fees.

II. PART B - FEE(S) TRANSMITTAL, or its equivalent, must be completed and returned to the United States Patent and Trademark Office (USPTO) with your ISSUE FEE and PUBLICATION FEE (if required). If you are charging the fee(s) to your deposit account, section "4b" of Part B - Fee(s) Transmittal should be completed and an extra copy of the form should be submitted. If an equivalent of Part B is filed, a request to reapply a previously paid issue fee must be clearly made, and delays in processing may occur due to the difficulty in recognizing the paper as an equivalent of Part B.

III. All communications regarding this application must give the application number. Please direct all communications prior to issuance to Mail Stop ISSUE FEE unless advised to the contrary.

IMPORTANT REMINDER: Maintenance fees are due in utility patents issuing on applications filed on or after Dec. 12, 1980. It is patentee's responsibility to ensure timely payment of maintenance fees when due. More information is available at www.uspto.gov/PatentMaintenanceFees.

PART B - FEE(S) TRANSMITTAL

Complete and send this form, together with applicable fee(s), to: Mail **Mail Stop ISSUE FEE**
Commissioner for Patents
P.O. Box 1450
Alexandria, Virginia 22313-1450
or Fax (571)-273-2885

INSTRUCTIONS: This form should be used for transmitting the ISSUE FEE and PUBLICATION FEE (if required). Blocks 1 through 5 should be completed where appropriate. All further correspondence including the Patent, advance orders and notification of maintenance fees will be mailed to the current correspondence address as indicated unless corrected below or directed otherwise in Block 1, by (a) specifying a new correspondence address; and/or (b) indicating a separate "FEE ADDRESS" for maintenance fee notifications.

CURRENT CORRESPONDENCE ADDRESS (Note: Use Block 1 for any change of address)

38137 7590 02/23/2018
ABELMAN, FRAYNE & SCHWAB
666 THIRD AVENUE, 10TH FLOOR
NEW YORK, NY 10017

Note: A certificate of mailing can only be used for domestic mailings of the Fee(s) Transmittal. This certificate cannot be used for any other accompanying papers. Each additional paper, such as an assignment or formal drawing, must have its own certificate of mailing or transmission.

Certificate of Mailing or Transmission
I hereby certify that this Fee(s) Transmittal is being deposited with the United States Postal Service with sufficient postage for first class mail in an envelope addressed to the Mail Stop ISSUE FEE address above, or being facsimile transmitted to the USPTO (571) 273-2885, on the date indicated below.

(Depositor's name)
(Signature)
(Date)

APPLICATION NO.	FILING DATE	FIRST NAMED INVENTOR	ATTORNEY DOCKET NO.	CONFIRMATION NO.
15/207,065	07/11/2016	Kameshwar Durvasula	214,790	6686

TITLE OF INVENTION: POOL CLEANING SYSTEM AND METHOD TO AUTOMATICALLY CLEAN SURFACES OF A POOL USING IMAGES FROM A CAMERA

APPLN. TYPE	ENTITY STATUS	ISSUE FEE DUE	PUBLICATION FEE DUE	PREV. PAID ISSUE FEE	TOTAL FEE(S) DUE	DATE DUE
nonprovisional	UNDISCOUNTED	$1000	$0	$0	$1000	05/23/2018

EXAMINER	ART UNIT	CLASS-SUBCLASS
WONG, ALLEN C	2488	348-114000

1. Change of correspondence address or indication of "Fee Address" (37 CFR 1.363).
❑ Change of correspondence address (or Change of Correspondence Address form PTO/SB/122) attached.
❑ "Fee Address" indication (or "Fee Address" Indication form PTO/SB/47; Rev 03-02 or more recent) attached. **Use of a Customer Number is required.**

2. For printing on the patent front page, list
(1) The names of up to 3 registered patent attorneys or agents OR, alternatively,
(2) The name of a single firm (having as a member a registered attorney or agent) and the names of up to 2 registered patent attorneys or agents. If no name is listed, no name will be printed.
1 _____
2 _____
3 _____

3. ASSIGNEE NAME AND RESIDENCE DATA TO BE PRINTED ON THE PATENT (print or type)

PLEASE NOTE: Unless an assignee is identified below, no assignee data will appear on the patent. If an assignee is identified below, the document has been filed for recordation as set forth in 37 CFR 3.11. Completion of this form is NOT a substitute for filing an assignment.

(A) NAME OF ASSIGNEE (B) RESIDENCE: (CITY and STATE OR COUNTRY)

Please check the appropriate assignee category or categories (will not be printed on the patent) : ❑ Individual ❑ Corporation or other private group entity ❑ Government

4a. The following fee(s) are submitted:
❑ Issue Fee
❑ Publication Fee (No small entity discount permitted)
❑ Advance Order - # of Copies _____

4b. Payment of Fee(s): (**Please first reapply any previously paid issue fee shown above**)
❑ A check is enclosed.
❑ Payment by credit card. Form PTO-2038 is attached.
❑ The director is hereby authorized to charge the required fee(s), any deficiency, or credits any overpayment, to Deposit Account Number _____ (enclose an extra copy of this form).

5. **Change in Entity Status** (from status indicated above)
❑ Applicant certifying micro entity status. See 37 CFR 1.29 — NOTE: Absent a valid certification of Micro Entity Status (see forms PTO/SB/15A and 15B), issue fee payment in the micro entity amount will not be accepted at the risk of application abandonment.
❑ Applicant asserting small entity status. See 37 CFR 1.27 — NOTE: If the application was previously under micro entity status, checking this box will be taken to be a notification of loss of entitlement to micro entity status.
❑ Applicant changing to regular undiscounted fee status. — NOTE: Checking this box will be taken to be a notification of loss of entitlement to small or micro entity status, as applicable.

NOTE: This form must be signed in accordance with 37 CFR 1.31 and 1.33. See 37 CFR 1.4 for signature requirements and certifications.

Authorized Signature _____ Date _____

Typed or printed name _____ Registration No. _____

WYBOTICS EX1037
Wybotics v. Zodiac
Page 021

UNITED STATES PATENT AND TRADEMARK OFFICE

UNITED STATES DEPARTMENT OF COMMERCE
United States Patent and Trademark Office
Address: COMMISSIONER FOR PATENTS
P.O. Box 1450
Alexandria, Virginia 22313-1450
www.uspto.gov

APPLICATION NO.	FILING DATE	FIRST NAMED INVENTOR	ATTORNEY DOCKET NO.	CONFIRMATION NO.
15/207,065	07/11/2016	Kameshwar Durvasula	214,790	6686

38137 7590 02/23/2018
ABELMAN, FRAYNE & SCHWAB
666 THIRD AVENUE, 10TH FLOOR
NEW YORK, NY 10017

EXAMINER
WONG, ALLEN C

ART UNIT	PAPER NUMBER
2488	

DATE MAILED: 02/23/2018

Determination of Patent Term Adjustment under 35 U.S.C. 154 (b)
(Applications filed on or after May 29, 2000)

The Office has discontinued providing a Patent Term Adjustment (PTA) calculation with the Notice of Allowance.

Section 1(h)(2) of the AIA Technical Corrections Act amended 35 U.S.C. 154(b)(3)(B)(i) to eliminate the requirement that the Office provide a patent term adjustment determination with the notice of allowance. See Revisions to Patent Term Adjustment, 78 Fed. Reg. 19416, 19417 (Apr. 1, 2013). Therefore, the Office is no longer providing an initial patent term adjustment determination with the notice of allowance. The Office will continue to provide a patent term adjustment determination with the Issue Notification Letter that is mailed to applicant approximately three weeks prior to the issue date of the patent, and will include the patent term adjustment on the patent. Any request for reconsideration of the patent term adjustment determination (or reinstatement of patent term adjustment) should follow the process outlined in 37 CFR 1.705.

Any questions regarding the Patent Term Extension or Adjustment determination should be directed to the Office of Patent Legal Administration at (571)-272-7702. Questions relating to issue and publication fee payments should be directed to the Customer Service Center of the Office of Patent Publication at 1-(888)-786-0101 or (571)-272-4200.

OMB Clearance and PRA Burden Statement for PTOL-85 Part B

The Paperwork Reduction Act (PRA) of 1995 requires Federal agencies to obtain Office of Management and Budget approval before requesting most types of information from the public. When OMB approves an agency request to collect information from the public, OMB (i) provides a valid OMB Control Number and expiration date for the agency to display on the instrument that will be used to collect the information and (ii) requires the agency to inform the public about the OMB Control Number's legal significance in accordance with 5 CFR 1320.5(b).

The information collected by PTOL-85 Part B is required by 37 CFR 1.311. The information is required to obtain or retain a benefit by the public which is to file (and by the USPTO to process) an application. Confidentiality is governed by 35 U.S.C. 122 and 37 CFR 1.14. This collection is estimated to take 12 minutes to complete, including gathering, preparing, and submitting the completed application form to the USPTO. Time will vary depending upon the individual case. Any comments on the amount of time you require to complete this form and/or suggestions for reducing this burden, should be sent to the Chief Information Officer, U.S. Patent and Trademark Office, U.S. Department of Commerce, P.O. Box 1450, Alexandria, Virginia 22313-1450. DO NOT SEND FEES OR COMPLETED FORMS TO THIS ADDRESS. SEND TO: Commissioner for Patents, P.O. Box 1450, Alexandria, Virginia 22313-1450. Under the Paperwork Reduction Act of 1995, no persons are required to respond to a collection of information unless it displays a valid OMB control number.

Privacy Act Statement

The Privacy Act of 1974 (P.L. 93-579) requires that you be given certain information in connection with your submission of the attached form related to a patent application or patent. Accordingly, pursuant to the requirements of the Act, please be advised that: (1) the general authority for the collection of this information is 35 U.S.C. 2(b)(2); (2) furnishing of the information solicited is voluntary; and (3) the principal purpose for which the information is used by the U.S. Patent and Trademark Office is to process and/or examine your submission related to a patent application or patent. If you do not furnish the requested information, the U.S. Patent and Trademark Office may not be able to process and/or examine your submission, which may result in termination of proceedings or abandonment of the application or expiration of the patent.

The information provided by you in this form will be subject to the following routine uses:

1. The information on this form will be treated confidentially to the extent allowed under the Freedom of Information Act (5 U.S.C. 552) and the Privacy Act (5 U.S.C 552a). Records from this system of records may be disclosed to the Department of Justice to determine whether disclosure of these records is required by the Freedom of Information Act.
2. A record from this system of records may be disclosed, as a routine use, in the course of presenting evidence to a court, magistrate, or administrative tribunal, including disclosures to opposing counsel in the course of settlement negotiations.
3. A record in this system of records may be disclosed, as a routine use, to a Member of Congress submitting a request involving an individual, to whom the record pertains, when the individual has requested assistance from the Member with respect to the subject matter of the record.
4. A record in this system of records may be disclosed, as a routine use, to a contractor of the Agency having need for the information in order to perform a contract. Recipients of information shall be required to comply with the requirements of the Privacy Act of 1974, as amended, pursuant to 5 U.S.C. 552a(m).
5. A record related to an International Application filed under the Patent Cooperation Treaty in this system of records may be disclosed, as a routine use, to the International Bureau of the World Intellectual Property Organization, pursuant to the Patent Cooperation Treaty.
6. A record in this system of records may be disclosed, as a routine use, to another federal agency for purposes of National Security review (35 U.S.C. 181) and for review pursuant to the Atomic Energy Act (42 U.S.C. 218(c)).
7. A record from this system of records may be disclosed, as a routine use, to the Administrator, General Services, or his/her designee, during an inspection of records conducted by GSA as part of that agency's responsibility to recommend improvements in records management practices and programs, under authority of 44 U.S.C. 2904 and 2906. Such disclosure shall be made in accordance with the GSA regulations governing inspection of records for this purpose, and any other relevant (i.e., GSA or Commerce) directive. Such disclosure shall not be used to make determinations about individuals.
8. A record from this system of records may be disclosed, as a routine use, to the public after either publication of the application pursuant to 35 U.S.C. 122(b) or issuance of a patent pursuant to 35 U.S.C. 151. Further, a record may be disclosed, subject to the limitations of 37 CFR 1.14, as a routine use, to the public if the record was filed in an application which became abandoned or in which the proceedings were terminated and which application is referenced by either a published application, an application open to public inspection or an issued patent.
9. A record from this system of records may be disclosed, as a routine use, to a Federal, State, or local law enforcement agency, if the USPTO becomes aware of a violation or potential violation of law or regulation.

Notice of Allowability	Application No. 15/207,065	Applicant(s) DURVASULA ET AL.	
	Examiner ALLEN WONG	Art Unit 2488	AIA (First Inventor to File) Status No

-- The MAILING DATE of this communication appears on the cover sheet with the correspondence address--

All claims being allowable, PROSECUTION ON THE MERITS IS (OR REMAINS) CLOSED in this application. If not included herewith (or previously mailed), a Notice of Allowance (PTOL-85) or other appropriate communication will be mailed in due course. **THIS NOTICE OF ALLOWABILITY IS NOT A GRANT OF PATENT RIGHTS.** This application is subject to withdrawal from issue at the initiative of the Office or upon petition by the applicant. See 37 CFR 1.313 and MPEP 1308.

1. ☒ This communication is responsive to *amendment filed 12/12/17*.
   ☐ A declaration(s)/affidavit(s) under **37 CFR 1.130(b)** was/were filed on_____.
2. ☐ An election was made by the applicant in response to a restriction requirement set forth during the interview on _____; the restriction requirement and election have been incorporated into this action.
3. ☒ The allowed claim(s) is/are *1-22*. As a result of the allowed claim(s), you may be eligible to benefit from the **Patent Prosecution Highway** program at a participating intellectual property office for the corresponding application. For more information, please see http://www.uspto.gov/patents/init_events/pph/index.jsp or send an inquiry to PPHfeedback@uspto.gov.
4. ☐ Acknowledgment is made of a claim for foreign priority under 35 U.S.C. § 119(a)-(d) or (f).

   Certified copies:

   a) ☐ All b) ☐ Some *c) ☐ None of the:
   1. ☐ Certified copies of the priority documents have been received.
   2. ☐ Certified copies of the priority documents have been received in Application No. _____ .
   3. ☐ Copies of the certified copies of the priority documents have been received in this national stage application from the International Bureau (PCT Rule 17.2(a)).

   * Certified copies not received: _____.

Applicant has THREE MONTHS FROM THE "MAILING DATE" of this communication to file a reply complying with the requirements noted below. Failure to timely comply will result in ABANDONMENT of this application.
THIS THREE-MONTH PERIOD IS NOT EXTENDABLE.

5. ☐ CORRECTED DRAWINGS (as "replacement sheets") must be submitted.
   ☐ including changes required by the attached Examiner's Amendment / Comment or in the Office action of Paper No./Mail Date _____.

   Identifying indicia such as the application number (see 37 CFR 1.84(c)) should be written on the drawings in the front (not the back) of each sheet. Replacement sheet(s) should be labeled as such in the header according to 37 CFR 1.121(d).
6. ☐ DEPOSIT OF and/or INFORMATION about the deposit of BIOLOGICAL MATERIAL must be submitted. Note the attached Examiner's comment regarding REQUIREMENT FOR THE DEPOSIT OF BIOLOGICAL MATERIAL.

Attachment(s)

1. ☐ Notice of References Cited (PTO-892)
2. ☐ Information Disclosure Statements (PTO/SB/08), Paper No./Mail Date _____
3. ☐ Examiner's Comment Regarding Requirement for Deposit of Biological Material
4. ☐ Interview Summary (PTO-413), Paper No./Mail Date _____ .
5. ☐ Examiner's Amendment/Comment
6. ☒ Examiner's Statement of Reasons for Allowance
7. ☐ Other _____.

/ALLEN WONG/
Primary Examiner, Art Unit 2488

WYBOTICS EX1037
Wybotics v. Zodiac
Page 024

DETAILED ACTION

The present application is being examined under the pre-AIA first to invent provisions.

Examiner's Comment on 35 USC § 101

Claims **1-22** appear to correspond to concepts identified as abstract ideas by the courts. However, the claim(s) include additional elements that are sufficient to amount to significantly more than the judicial exception because the claimed invention recites claim limitation "a controller, in electronic communication with the at least one camera, to determine a cleanliness characteristic of the pool surface on which the cleaner has passed based on the camera imagery and generate a control signal to direct movement of the cleaner based on the cleanliness characteristic of the pool surface, wherein the control signal directs movement of the cleaner to reclean a portion of the pool surface where the cleanliness characteristic fails to satisfy a predefined threshold" of claim 1, and "a controller in electronic communication with the at least one camera and the at least one sensor to a generate a control signal to direct movement of the cleaner based on the cleanliness characteristic of the pool surface; and wherein the control signal directs movement of the cleaner to reclean a portion of the pool surface where the cleanliness characteristic fails to satisfy a predefined threshold" of claim 16.

Allowable Subject Matter

Claims 1-22 are allowed.

The following is an examiner's statement of reasons for allowance: the present invention pertains to pool cleaning system for cleaning debris inside submerged surfaces of swimming pools.

With regards to claim 1, Porat (US 2011/0290707) discloses a pool cleaning system for cleaning debris from a submerged surface of a swimming pool (fig.1) comprising:

a self-propelled pool cleaner having rotatably-mounted supports for supporting and guiding the cleaner on the pool surface (paragraph 78);

a filter configured to retain the debris collected from the submerged surface of the swimming pool (paragraph 78, ln.8-11);

an electric motor for enabling the rotation of the rotatably-mounted supports on the pool surface (paragraph 78, ln.8-11).

Meniere (US 7,362,351) discloses at least one camera to capture imagery of the pool surface (col.6, ln.21-30), a controller, in electronic communication with the at least one camera (col.14, ln.52-58).

The prior art, either singularly or in combination, does not disclose the limitation "a controller, in electronic communication with the at least one camera, to determine a cleanliness characteristic of the pool surface on which the cleaner has passed based on the camera imagery and generate a control signal to direct movement of the cleaner based on the cleanliness characteristic of the pool surface, wherein the control signal directs movement of the cleaner to reclean a portion of the pool surface where the cleanliness characteristic fails to satisfy a predefined threshold".

Thus, the prior art does not disclose the aforementioned limitation used in combination with all of the other limitations of claim 1.

With regards to claim 16, Porat (US 2011/0290707) discloses a pool cleaning system for cleaning debris from a submerged surface of a swimming pool (fig.1) comprising:

a self-propelled pool cleaner having rotatably-mounted supports for supporting and guiding the cleaner on the pool surface (paragraph 78);

an electric motor for enabling the rotation of the rotatably-mounted supports on the pool surface (paragraph 78, ln.8-11);

a filter configured to retain the debris collected from the submerged surface of the swimming pool (paragraph 78, ln.8-11).

Meniere (US 7,362,351) discloses at least one camera to capture imagery of the pool surface (col.6, ln.21-30), a controller in electronic communication with the at least one camera (col.14, ln.52-58).

The prior art, either singularly or in combination, does not disclose the limitations "at least one sensor to detect a cleanliness characteristic of the pool surface on which the cleaner has passed" and "a controller in electronic communication with the at least one camera and the at least one sensor to a generate a control signal to direct movement of the cleaner based on the cleanliness characteristic of

the pool surface; and wherein the control signal directs movement of the cleaner to reclean a portion of the pool surface where the cleanliness characteristic fails to satisfy a predefined threshold".

Thus, the prior art does not disclose the aforementioned limitations used in combination with all of the other limitations of claim 16.

Any comments considered necessary by applicant must be submitted no later than the payment of the issue fee and, to avoid processing delays, should preferably accompany the issue fee. Such submissions should be clearly labeled "Comments on Statement of Reasons for Allowance."

Terminal Disclaimer

The terminal disclaimer filed on 12/12/17 disclaiming the terminal portion of any patent granted on this application which would extend beyond the expiration date of the full statutory term of US Patent Number 9,388,595 has been reviewed and is accepted. The terminal disclaimer has been recorded.

Contact Information

Any inquiry concerning this communication or earlier communications from the examiner should be directed to ALLEN WONG whose telephone number is (571)272-7341. The examiner can normally be reached on Flex Monday to Thursday 9am-7pm.

Examiner interviews are available via telephone, in-person, and video conferencing using a USPTO supplied web-based collaboration tool. To schedule an interview, applicant is encouraged to use the USPTO Automated Interview Request (AIR) at http://www.uspto.gov/interviewpractice.

If attempts to reach the examiner by telephone are unsuccessful, the examiner's supervisor, SATH PERUNGAVOOR can be reached on (571) 272-7455. The fax phone number for the organization where this application or proceeding is assigned is 571-273-8300.

Information regarding the status of an application may be obtained from the Patent Application Information Retrieval (PAIR) system. Status information for published applications may be obtained from either Private PAIR or Public PAIR. Status information for unpublished applications is available through Private PAIR only. For more information about the PAIR system, see http://pair-direct.uspto.gov. Should you have questions on access to the Private PAIR system, contact the Electronic Business Center (EBC)

at 866-217-9197 (toll-free). If you would like assistance from a USPTO Customer Service Representative or access to the automated information system, call 800-786-9199 (IN USA OR CANADA) or 571-272-1000.

/ALLEN WONG/
Primary Examiner, Art Unit 2488

UNITED STATES PATENT AND TRADEMARK OFFICE

UNITED STATES DEPARTMENT OF COMMERCE
United States Patent and Trademark Office
Address: COMMISSIONER FOR PATENTS
P.O. Box 1450
Alexandria, Virginia 22313-1450
www.uspto.gov

BIB DATA SHEET

CONFIRMATION NO. 6686

SERIAL NUMBER	FILING or 371(c) DATE	CLASS	GROUP ART UNIT	ATTORNEY DOCKET NO.
15/207,065	07/11/2016 RULE	348	2488	214,790

APPLICANTS
AQUA PRODUCTS, INC., Cedar Grove, NJ;

INVENTORS
Kameshwar Durvasula, Garfield, NJ;
William Londono Correa, Bloomfield, NJ;

**** CONTINUING DATA ***************************
This application is a CON of 13/545,918 07/10/2012 PAT 9388595

**** FOREIGN APPLICATIONS ***************************

**** IF REQUIRED, FOREIGN FILING LICENSE GRANTED ****
07/25/2016

Foreign Priority claimed	☐ Yes ☑ No		STATE OR COUNTRY	SHEETS DRAWINGS	TOTAL CLAIMS	INDEPENDENT CLAIMS
35 USC 119(a-d) conditions met	☐ Yes ☐ No	☐ Met after Allowance				
Verified and Acknowledged	/ALLEN C WONG/ Examiner's Signature	Initials	NJ	4	22	2

ADDRESS
ABELMAN, FRAYNE & SCHWAB
666 THIRD AVENUE, 10TH FLOOR
NEW YORK, NY 10017
UNITED STATES

TITLE
POOL CLEANING SYSTEM AND METHOD TO AUTOMATICALLY CLEAN SURFACES OF A POOL USING IMAGES FROM A CAMERA

FILING FEE RECEIVED		
1900	FEES: Authority has been given in Paper No._____ to charge/credit DEPOSIT ACCOUNT No._____ for following:	☐ All Fees ☐ 1.16 Fees (Filing) ☐ 1.17 Fees (Processing Ext. of time) ☐ 1.18 Fees (Issue) ☐ Other _____ ☐ Credit

Index of Claims	Application/Control No.	Applicant(s)/Patent Under Reexamination
	15207065	DURVASULA ET AL.
	Examiner	**Art Unit**
	ALLEN WONG	2488

✓	Rejected	-	Cancelled	N	Non-Elected	A	Appeal
=	Allowed	÷	Restricted	I	Interference	O	Objected

☐ Claims renumbered in the same order as presented by applicant ☐ CPA ☒ T.D. ☐ R.1.47

CLAIM		DATE								
Final	Original	11/02/2017	02/12/2018							
1	1	✓	=							
2	2	✓	=							
3	3	✓	=							
4	4	✓	=							
5	5	✓	=							
6	6	✓	=							
7	7	✓	=							
8	8	✓	=							
9	9	✓	=							
10	10	✓	=							
11	11	✓	=							
12	12	✓	=							
13	13	✓	=							
14	14	✓	=							
15	15	✓	=							
16	16	✓	=							
17	17	✓	=							
18	18	✓	=							
19	19	✓	=							
20	20	✓	=							
21	21	✓	=							
22	22	✓	=							

Issue Classification	Application/Control No.	Applicant(s)/Patent Under Reexamination
	15207065	DURVASULA ET AL.
	Examiner	**Art Unit**
	ALLEN WONG	2488

CPC

Symbol					Type	Version
E04H		4	/	1654	F	2013-01-01
H04N		7	/	18	I	2013-01-01
H04N		5	/	23203	I	2013-01-01
H04N		2005	/	2255	A	2013-01-01
			/			
			/			
			/			
			/			
			/			
			/			
			/			
			/			
			/			
			/			
			/			

CPC Combination Sets

Symbol					Type	Set	Ranking	Version
			/					
			/					

NONE (Assistant Examiner)	(Date)	**Total Claims Allowed:** 22	
/ALLEN WONG/ Primary Examiner.Art Unit 2488 (Primary Examiner)	02/12/2018 (Date)	O.G. Print Claim(s) 1	O.G. Print Figure 10

Issue Classification	Application/Control No.	Applicant(s)/Patent Under Reexamination
	15207065	DURVASULA ET AL.
	Examiner	**Art Unit**
	ALLEN WONG	2488

US ORIGINAL CLASSIFICATION		INTERNATIONAL CLASSIFICATION	
CLASS	SUBCLASS	CLAIMED	NON-CLAIMED
348	114	H 0 4 N 7 / 18 (2006.01.01)	

CROSS REFERENCE(S)					
CLASS	SUBCLASS (ONE SUBCLASS PER BLOCK)				

NONE (Assistant Examiner)	(Date)	**Total Claims Allowed:** 22	
/ALLEN WONG/ Primary Examiner.Art Unit 2488 (Primary Examiner)	02/12/2018 (Date)	O.G. Print Claim(s) 1	O.G. Print Figure 10

Issue Classification	Application/Control No.	Applicant(s)/Patent Under Reexamination
	15207065	DURVASULA ET AL.
	Examiner	**Art Unit**
	ALLEN WONG	2488

☐ Claims renumbered in the same order as presented by applicant ☐ CPA ☒ T.D. ☐ R.1.47

Final	Original	Final	Original	Final	Original	Final	Original	Final	Original	Final	Original	Final	Original	Final	Original
1	1	17	17												
2	2	18	18												
3	3	19	19												
4	4	20	20												
5	5	21	21												
6	6	22	22												
7	7														
8	8														
9	9														
10	10														
11	11														
12	12														
13	13														
14	14														
15	15														
16	16														

NONE (Assistant Examiner)	(Date)	**Total Claims Allowed:** 22	
/ALLEN WONG/ Primary Examiner.Art Unit 2488 (Primary Examiner)	02/12/2018 (Date)	O.G. Print Claim(s) 1	O.G. Print Figure 10

Search Notes	Application/Control No.	Applicant(s)/Patent Under Reexamination
	15207065	DURVASULA ET AL.
	Examiner	**Art Unit**
	ALLEN WONG	2488

CPC- SEARCHED

Symbol	Date	Examiner
E04H 4/1654; H04N 5/23203; H04N 7/18; H04N 2005/2255	10/26/17	AW
search updated	2/12/18	AW

CPC COMBINATION SETS - SEARCHED

Symbol	Date	Examiner

US CLASSIFICATION SEARCHED

Class	Subclass	Date	Examiner
348	114	10/26/17	AW
search	updated	2/12/18	AW

* See search history printout included with this form or the SEARCH NOTES box below to determine the scope of the search.

SEARCH NOTES

Search Notes	Date	Examiner
E04H 4/1654; H04N 5/23203; H04N 7/18; H04N 2005/2255 (see search history printout)	11/2/17	AW
US Patent No. 9,388,595 (refs checked)	11/2/17	AW

INTERFERENCE SEARCH

US Class/ CPC Symbol	US Subclass / CPC Group	Date	Examiner
348	114	2/12/18	AW
E04H	4/1654	2/12/18	AW
H04N	5/23203; 7/18; 2005/2255	2/12/18	AW

	/ALLEN WONG/ Primary Examiner.Art Unit 2488

Application Number	Application/Control No.	Applicant(s)/Patent under Reexamination
	15/207,065	DURVASULA ET AL.

Document Code - DISQ	Internal Document – DO NOT MAIL

TERMINAL DISCLAIMER	☒ APPROVED	☐ DISAPPROVED
Date Filed : 12 December, 2017	This patent is subject to a Terminal Disclaimer	

Approved/Disapproved by:

CHARRISSA BROWN

Technology Center: PLRC

Telephone: (571)272-1558

U.S. Patent and Trademark Office

IN THE UNITED STATES PATENT AND TRADEMARK OFFICE

APPLICANT	:	DURVASULA, et al.	Examiner	:	WONG, Allen C.
Serial No.	:	15/207,065	Art Unit	:	2488
Filed	:	July 11, 2016	Confirmation	:	6686

For : POOL CLEANING SYSTEM AND METHOD TO AUTOMATICALLY CLEAN SURFACES OF A POOL USING IMAGES FROM A CAMERA

December 12, 2017

RESPONSE UNDER 37 CFR §1.111

Mail Stop – Amendment
Commissioner for Patents
P.O. Box 1450
Alexandria, VA 22313-1450

Commissioner:

In response to the non-final Office Action dated November 6, 2017, please reconsider the above-identified patent application as follows:

WYBOTICS EX1037
Wybotics v. Zodiac
Page 036

REMARKS

This Response is intended as a full and complete response to the final Office Action dated November 6, 2017. In the Office Action, the Examiner states that Claims 1-22 are pending and stand rejected.

In view of both the Terminal Disclaimer enclosed herewith and the following discussion, it is submitted that all of these claims are now in allowable form.

Double Patenting Rejections

1. Claims 1-11 and 15-22

The Examiner has rejected claims 1-11 and 15-22 on the ground of non-statutory obviousness-type double patenting over claims 1 and 7 of commonly assigned US patent no. 9,388,595 to Durvasula et al. (issued July 12, 2016) in view of commonly assigned US publication no. 2011/0290707 to Porat.

2. Claims 12 and 13

The Examiner has rejected claims 12 and 13 on the ground of non-statutory obviousness-type double patenting over claims 1 and 7 of commonly assigned US patent no. 9,388,595 to Durvasula et al. (issued July 12, 2016) in view of commonly assigned US publication no. 2011/0290707 to Porat and in further view of US patent no. 7,123,746 to Meniere et al..

3. Claim 14

The Examiner has rejected claim 14 on the ground of non-statutory obviousness-type double patenting over claims 1 and 7 of commonly assigned US patent no. 9,388,595 to Durvasula et al. (issued July 12, 2016) in view of commonly assigned US publication no. 2011/0290707 to Porat and in further view of publication no. WO 2012/023676 to Hong et al.

WYBOTICS EX1037
Wybotics v. Zodiac
Page 037

In response, a terminal disclaimer in accordance with 37 C.F.R. 1.321 is submitted herewith to overcome the non-statutory obviousness-type double patenting rejections of claims 1--22.

In view of the attached terminal disclaimer, it is respectfully submitted that the aforementioned claims are patentable and in condition for allowance. Withdrawal of the obviousness-type double patenting rejections of claims 1-22 is respectfully requested.

Examiner's Comments on 35 U.S.C. §101

On page 7 of the Office Action, the Examiner states that "[c]laims 1-22 appear to correspond to concepts identified as abstract ideas by the courts. However, the claims include additional elements that are sufficient to amount to significantly more than the judicial exception because ...".

The Applicant thanks the Examiner for commenting that in the Examiner's opinion, the claims satisfy the requirements under 35 U.S.C. §101. The Applicant does not believe that the subject matter claimed in any way raises an issue under the judicially created exceptions to 35 U.S.C. §101. However, the Applicant concurs that if it were alleged or found that the claims correspond to concepts identified as abstract ideas, the claims do in fact recite elements that are sufficient to amount to significantly more than the judicial exception for at least the reasons stated by the Examiner in the Office Action.

Conclusion

In view of the attached terminal disclaimer and the discussion presented herein, it is respectfully submitted that the present Amendment responds to all of the issues raised in the Office Action. Thus, it is submitted that all of the claims are in condition for allowance. Accordingly, reconsideration of this application and its prompt passage to issue are earnestly solicited.

If, however, the Examiner believes that there are any unresolved issues in any of the claims now pending in the application, we respectfully request that the Examiner telephone Steven M. Hertzberg at (212) 885-9223 so that appropriate arrangements can be made for resolving such issues as expeditiously as possible.

The Commissioner is hereby authorized to charge the fee for the attached terminal disclaimer any additional fees, or to credit any overpayment, due by reason of this Response to Deposit Account No. 01-0035.

All correspondence should continue to be directed to the address below.

Respectfully submitted,

/Steven M. Hertzberg/
Steven M. Hertzberg
Reg. No. 41,834
Attorney for Applicant

ABELMAN, FRAYNE & SCHWAB
666 Third Avenue, 10th Floor
New York, NY 10017
Tel. (212) 949-9022
(212) 949-9022
Customer No. 38,137

IN THE UNITED STATES PATENT AND TRADEMARK OFFICE

APPLICANT	:	DURVASULA, et al.	Examiner	:	WONG, Allen C.
Serial No.	:	15/207,065	Art Unit	:	2488
Filed	:	July 11, 2016	Confirmation	:	6686

For : POOL CLEANING SYSTEM AND METHOD TO AUTOMATICALLY CLEAN SURFACES OF A POOL USING IMAGES FROM A CAMERA

December 12, 2017

RESPONSE UNDER 37 CFR §1.111

Mail Stop – Amendment
Commissioner for Patents
P.O. Box 1450
Alexandria, VA 22313-1450

Commissioner:

In response to the non-final Office Action dated November 6, 2017, please reconsider the above-identified patent application as follows:

WYBOTICS EX1037
Wybotics v. Zodiac
Page 040

REMARKS

This Response is intended as a full and complete response to the final Office Action dated November 6, 2017. In the Office Action, the Examiner states that Claims 1-22 are pending and stand rejected.

In view of both the Terminal Disclaimer enclosed herewith and the following discussion, it is submitted that all of these claims are now in allowable form.

Double Patenting Rejections

1. Claims 1-11 and 15-22

The Examiner has rejected claims 1-11 and 15-22 on the ground of non-statutory obviousness-type double patenting over claims 1 and 7 of commonly assigned US patent no. 9,388,595 to Durvasula et al. (issued July 12, 2016) in view of commonly assigned US publication no. 2011/0290707 to Porat.

2. Claims 12 and 13

The Examiner has rejected claims 12 and 13 on the ground of non-statutory obviousness-type double patenting over claims 1 and 7 of commonly assigned US patent no. 9,388,595 to Durvasula et al. (issued July 12, 2016) in view of commonly assigned US publication no. 2011/0290707 to Porat and in further view of US patent no. 7,123,746 to Meniere et al..

3. Claim 14

The Examiner has rejected claim 14 on the ground of non-statutory obviousness-type double patenting over claims 1 and 7 of commonly assigned US patent no. 9,388,595 to Durvasula et al. (issued July 12, 2016) in view of commonly assigned US publication no. 2011/0290707 to Porat and in further view of publication no. WO 2012/023676 to Hong et al.

WYBOTICS EX1037
Wybotics v. Zodiac
Page 041

In response, a terminal disclaimer in accordance with 37 C.F.R. 1.321 is submitted herewith to overcome the non-statutory obviousness-type double patenting rejections of claims 1--22.

In view of the attached terminal disclaimer, it is respectfully submitted that the aforementioned claims are patentable and in condition for allowance. Withdrawal of the obviousness-type double patenting rejections of claims 1-22 is respectfully requested.

Examiner's Comments on 35 U.S.C. §101

On page 7 of the Office Action, the Examiner states that "[c]laims 1-22 appear to correspond to concepts identified as abstract ideas by the courts. However, the claims include additional elements that are sufficient to amount to significantly more than the judicial exception because ...".

The Applicant thanks the Examiner for commenting that in the Examiner's opinion, the claims satisfy the requirements under 35 U.S.C. §101. The Applicant does not believe that the subject matter claimed in any way raises an issue under the judicially created exceptions to 35 U.S.C. §101. However, the Applicant concurs that if it were alleged or found that the claims correspond to concepts identified as abstract ideas, the claims do in fact recite elements that are sufficient to amount to significantly more than the judicial exception for at least the reasons stated by the Examiner in the Office Action.

Conclusion

In view of the attached terminal disclaimer and the discussion presented herein, it is respectfully submitted that the present Amendment responds to all of the issues raised in the Office Action. Thus, it is submitted that all of the claims are in condition for allowance. Accordingly, reconsideration of this application and its prompt passage to issue are earnestly solicited.

If, however, the Examiner believes that there are any unresolved issues in any of the claims now pending in the application, we respectfully request that the Examiner telephone Steven M. Hertzberg at (212) 885-9223 so that appropriate arrangements can be made for resolving such issues as expeditiously as possible.

The Commissioner is hereby authorized to charge the fee for the attached terminal disclaimer any additional fees, or to credit any overpayment, due by reason of this Response to Deposit Account No. 01-0035.

All correspondence should continue to be directed to the address below.

Respectfully submitted,

/Steven M. Hertzberg/
Steven M. Hertzberg
Reg. No. 41,834
Attorney for Applicant

ABELMAN, FRAYNE & SCHWAB
666 Third Avenue, 10th Floor
New York, NY 10017
Tel. (212) 949-9022
(212) 949-9022
Customer No. 38,137

WYBOTICS EX1037
Wybotics v. Zodiac
Page 043

PTO/AIA/26 (04-14)
Approved for use through 07/31/2016. OMB 0651-0031
U.S. Patent and Trademark Office; U.S. DEPARTMENT OF COMMERCE
Under the Paperwork Reduction Act of 1995, no persons are required to respond to a collection of information unless it displays a valid OMB control number.

TERMINAL DISCLAIMER TO OBVIATE A DOUBLE PATENTING REJECTION OVER A "PRIOR" PATENT

Docket Number (Optional)
214,790

In re Application of: DURVASULA, Kameshwar

Application No.: 15/207,065

Filed: July 11, 2016

For: POOL CLEANING SYSTEM AND METHOD TO AUTOMATICALLY CLEAN SURFACES OF A POOL USING IMAGES FROM A CAMERA

The applicant, Aqua Products, Inc., owner of 100 percent interest in the instant application hereby disclaims, except as provided below, the terminal part of the statutory term of any patent granted on the instant application which would extend beyond the expiration date of the full statutory term of **prior patent** No. 9,388,595 as the term of said **prior patent** is presently shortened by any terminal disclaimer. The applicant hereby agrees that any patent so granted on the instant application shall be enforceable only for and during such period that it and the **prior patent** are commonly owned. This agreement runs with any patent granted on the instant application and is binding upon the grantee, its successors or assigns.

In making the above disclaimer, the applicant does not disclaim the terminal part of the term of any patent granted on the instant application that would extend to the expiration date of the full statutory term of the **prior patent**, "as the term of said **prior patent** is presently shortened by any terminal disclaimer," in the event that said **prior patent** later:

expires for failure to pay a maintenance fee;
is held unenforceable;
is found invalid by a court of competent jurisdiction;
is statutorily disclaimed in whole or terminally disclaimed under 37 CFR 1.321;
has all claims canceled by a reexamination certificate;
is reissued; or
is in any manner terminated prior to the expiration of its full statutory term as presently shortened by any terminal disclaimer.

Check either box 1 or 2 below, if appropriate.

1. ☐ The undersigned is the applicant. If the applicant is an assignee, the undersigned is authorized to act on behalf of the assignee.

I hereby acknowledge that any willful false statements made are punishable under 18 U.S.C. 1001 by fine or imprisonment of not more than five (5) years, or both.

2. ☑ The undersigned is an attorney or agent of record. Reg. No. 41,834

/Steven M. Hertzberg/	December 12, 2017
Signature	Date
Steven M. Hertzberg	
Typed or printed name	
Attorney	(212) 949-9022
Title	Telephone Number

☑ Terminal disclaimer fee under 37 CFR 1.20(d) included.

WARNING: Information on this form may become public. Credit card information should not be included on this form. Provide credit card information and authorization on PTO-2038.

This collection of information is required by 37 CFR 1.321. The information is required to obtain or retain a benefit by the public which is to file (and by the USPTO to process) an application. Confidentiality is governed by 35 U.S.C. 122 and 37 CFR 1.11 and 1.14. This collection is estimated to take 12 minutes to complete, including gathering, preparing, and submitting the completed application form to the USPTO. Time will vary depending upon the individual case. Any comments on the amount of time you require to complete this form and/or suggestions for reducing this burden, should be sent to the Chief Information Officer, U.S. Patent and Trademark Office, U.S. Department of Commerce, P.O. Box 1450, Alexandria, VA 22313-1450. DO NOT SEND FEES OR COMPLETED FORMS TO THIS ADDRESS. **SEND TO: Commissioner for Patents, P.O. Box 1450, Alexandria, VA 22313-1450.**

If you need assistance in completing the form, call 1-800-PTO-9199 and select option 2.

Privacy Act Statement

The **Privacy Act of 1974 (P.L. 93-579)** requires that you be given certain information in connection with your submission of the attached form related to a patent application or patent. Accordingly, pursuant to the requirements of the Act, please be advised that: (1) the general authority for the collection of this information is 35 U.S.C. 2(b)(2); (2) furnishing of the information solicited is voluntary; and (3) the principal purpose for which the information is used by the U.S. Patent and Trademark Office is to process and/or examine your submission related to a patent application or patent. If you do not furnish the requested information, the U.S. Patent and Trademark Office may not be able to process and/or examine your submission, which may result in termination of proceedings or abandonment of the application or expiration of the patent.

The information provided by you in this form will be subject to the following routine uses:

1. The information on this form will be treated confidentially to the extent allowed under the Freedom of Information Act (5 U.S.C. 552) and the Privacy Act (5 U.S.C 552a). Records from this system of records may be disclosed to the Department of Justice to determine whether disclosure of these records is required by the Freedom of Information Act.
2. A record from this system of records may be disclosed, as a routine use, in the course of presenting evidence to a court, magistrate, or administrative tribunal, including disclosures to opposing counsel in the course of settlement negotiations.
3. A record in this system of records may be disclosed, as a routine use, to a Member of Congress submitting a request involving an individual, to whom the record pertains, when the individual has requested assistance from the Member with respect to the subject matter of the record.
4. A record in this system of records may be disclosed, as a routine use, to a contractor of the Agency having need for the information in order to perform a contract. Recipients of information shall be required to comply with the requirements of the Privacy Act of 1974, as amended, pursuant to 5 U.S.C. 552a(m).
5. A record related to an International Application filed under the Patent Cooperation Treaty in this system of records may be disclosed, as a routine use, to the International Bureau of the World Intellectual Property Organization, pursuant to the Patent Cooperation Treaty.
6. A record in this system of records may be disclosed, as a routine use, to another federal agency for purposes of National Security review (35 U.S.C. 181) and for review pursuant to the Atomic Energy Act (42 U.S.C. 218(c)).
7. A record from this system of records may be disclosed, as a routine use, to the Administrator, General Services, or his/her designee, during an inspection of records conducted by GSA as part of that agency's responsibility to recommend improvements in records management practices and programs, under authority of 44 U.S.C. 2904 and 2906. Such disclosure shall be made in accordance with the GSA regulations governing inspection of records for this purpose, and any other relevant (*i.e.*, GSA or Commerce) directive. Such disclosure shall not be used to make determinations about individuals.
8. A record from this system of records may be disclosed, as a routine use, to the public after either publication of the application pursuant to 35 U.S.C. 122(b) or issuance of a patent pursuant to 35 U.S.C. 151. Further, a record may be disclosed, subject to the limitations of 37 CFR 1.14, as a routine use, to the public if the record was filed in an application which became abandoned or in which the proceedings were terminated and which application is referenced by either a published application, an application open to public inspection or an issued patent.
9. A record from this system of records may be disclosed, as a routine use, to a Federal, State, or local law enforcement agency, if the USPTO becomes aware of a violation or potential violation of law or regulation.

Electronic Patent Application Fee Transmittal

Application Number:	15207065
Filing Date:	11-Jul-2016
Title of Invention:	POOL CLEANING SYSTEM AND METHOD TO AUTOMATICALLY CLEAN SURFACES OF A POOL USING IMAGES FROM A CAMERA
First Named Inventor/Applicant Name:	Kameshwar Durvasula
Filer:	Steven M. Hertzberg/Steven Ortiz
Attorney Docket Number:	214,790

Filed as Large Entity

Filing Fees for Utility under 35 USC 111(a)

Description	Fee Code	Quantity	Amount	Sub-Total in USD($)
Basic Filing:				
Pages:				
Claims:				
Miscellaneous-Filing:				
Petition:				
Patent-Appeals-and-Interference:				
Post-Allowance-and-Post-Issuance:				
Extension-of-Time:				

Description	Fee Code	Quantity	Amount	Sub-Total in USD($)
Miscellaneous:				
STATUTORY OR TERMINAL DISCLAIMER	1814	1	160	160
		Total in USD ($)		**160**

Electronic Acknowledgement Receipt

EFS ID:	31196615
Application Number:	15207065
International Application Number:	
Confirmation Number:	6686
Title of Invention:	POOL CLEANING SYSTEM AND METHOD TO AUTOMATICALLY CLEAN SURFACES OF A POOL USING IMAGES FROM A CAMERA
First Named Inventor/Applicant Name:	Kameshwar Durvasula
Customer Number:	38137
Filer:	Steven M. Hertzberg/Steven Ortiz
Filer Authorized By:	Steven M. Hertzberg
Attorney Docket Number:	214,790
Receipt Date:	12-DEC-2017
Filing Date:	11-JUL-2016
Time Stamp:	10:43:28
Application Type:	Utility under 35 USC 111(a)

Payment information:

Submitted with Payment	yes
Payment Type	DA
Payment was successfully received in RAM	$160
RAM confirmation Number	121217INTEFSW00010671010035
Deposit Account	
Authorized User	

The Director of the USPTO is hereby authorized to charge indicated fees and credit any overpayment as follows:

File Listing:

Document Number	Document Description	File Name	File Size(Bytes)/ Message Digest	Multi Part /.zip	Pages (if appl.)
1	Amendment/Req. Reconsideration-After Non-Final Reject	214790_Response-12-12-17.pdf	101892 befb923b498741730c0f13051c4a0de99e1b4331	no	4
Warnings:					
Information:					
2	Terminal Disclaimer Filed	214790_Terminal_Disclaimer.pdf	160497 fd7aafb479c7efde9e50561add5ee0a13b4e82d8	no	2
Warnings:					
Information:					
3	Fee Worksheet (SB06)	fee-info.pdf	30651 e1aae19e24bbec0c89293e419c7d00b35637f586	no	2
Warnings:					
Information:					
		Total Files Size (in bytes):	293040		

This Acknowledgement Receipt evidences receipt on the noted date by the USPTO of the indicated documents, characterized by the applicant, and including page counts, where applicable. It serves as evidence of receipt similar to a Post Card, as described in MPEP 503.

<u>New Applications Under 35 U.S.C. 111</u>
If a new application is being filed and the application includes the necessary components for a filing date (see 37 CFR 1.53(b)-(d) and MPEP 506), a Filing Receipt (37 CFR 1.54) will be issued in due course and the date shown on this Acknowledgement Receipt will establish the filing date of the application.
<u>National Stage of an International Application under 35 U.S.C. 371</u>
If a timely submission to enter the national stage of an international application is compliant with the conditions of 35 U.S.C. 371 and other applicable requirements a Form PCT/DO/EO/903 indicating acceptance of the application as a national stage submission under 35 U.S.C. 371 will be issued in addition to the Filing Receipt, in due course.
<u>New International Application Filed with the USPTO as a Receiving Office</u>
If a new international application is being filed and the international application includes the necessary components for an international filing date (see PCT Article 11 and MPEP 1810), a Notification of the International Application Number and of the International Filing Date (Form PCT/RO/105) will be issued in due course, subject to prescriptions concerning national security, and the date shown on this Acknowledgement Receipt will establish the international filing date of the application.

UNITED STATES PATENT AND TRADEMARK OFFICE

UNITED STATES DEPARTMENT OF COMMERCE
United States Patent and Trademark Office
Address: COMMISSIONER FOR PATENTS
P.O. Box 1450
Alexandria, Virginia 22313-1450
www.uspto.gov

APPLICATION NO.	FILING DATE	FIRST NAMED INVENTOR	ATTORNEY DOCKET NO.	CONFIRMATION NO.
15/207,065	07/11/2016	Kameshwar Durvasula	214,790	6686

38137 7590 11/06/2017
ABELMAN, FRAYNE & SCHWAB
666 THIRD AVENUE, 10TH FLOOR
NEW YORK, NY 10017

EXAMINER
WONG, ALLEN C

ART UNIT	PAPER NUMBER
2488	

MAIL DATE	DELIVERY MODE
11/06/2017	PAPER

Please find below and/or attached an Office communication concerning this application or proceeding.

The time period for reply, if any, is set in the attached communication.

Office Action Summary	Application No. 15/207,065	Applicant(s) DURVASULA ET AL.	
	Examiner ALLEN WONG	Art Unit 2488	AIA (First Inventor to File) Status No

-- The MAILING DATE of this communication appears on the cover sheet with the correspondence address --

Period for Reply

A SHORTENED STATUTORY PERIOD FOR REPLY IS SET TO EXPIRE 3 MONTHS FROM THE MAILING DATE OF THIS COMMUNICATION.

- Extensions of time may be available under the provisions of 37 CFR 1.136(a). In no event, however, may a reply be timely filed after SIX (6) MONTHS from the mailing date of this communication.
- If NO period for reply is specified above, the maximum statutory period will apply and will expire SIX (6) MONTHS from the mailing date of this communication.
- Failure to reply within the set or extended period for reply will, by statute, cause the application to become ABANDONED (35 U.S.C. § 133). Any reply received by the Office later than three months after the mailing date of this communication, even if timely filed, may reduce any earned patent term adjustment. See 37 CFR 1.704(b).

Status

1)☐ Responsive to communication(s) filed on _____.

☐ A declaration(s)/affidavit(s) under **37 CFR 1.130(b)** was/were filed on _____.

2a)☐ This action is **FINAL**. 2b)☒ This action is non-final.

3)☐ An election was made by the applicant in response to a restriction requirement set forth during the interview on _____; the restriction requirement and election have been incorporated into this action.

4)☐ Since this application is in condition for allowance except for formal matters, prosecution as to the merits is closed in accordance with the practice under *Ex parte Quayle*, 1935 C.D. 11, 453 O.G. 213.

Disposition of Claims*

5)☒ Claim(s) 1-22 is/are pending in the application.

5a) Of the above claim(s) _____ is/are withdrawn from consideration.

6)☐ Claim(s) _____ is/are allowed.

7)☒ Claim(s) 1-22 is/are rejected.

8)☐ Claim(s) _____ is/are objected to.

9)☐ Claim(s) _____ are subject to restriction and/or election requirement.

* If any claims have been determined allowable, you may be eligible to benefit from the **Patent Prosecution Highway** program at a participating intellectual property office for the corresponding application. For more information, please see http://www.uspto.gov/patents/init_events/pph/index.jsp or send an inquiry to PPHfeedback@uspto.gov.

Application Papers

10)☐ The specification is objected to by the Examiner.

11)☒ The drawing(s) filed on 7/11/16 is/are: a)☒ accepted or b)☐ objected to by the Examiner.

Applicant may not request that any objection to the drawing(s) be held in abeyance. See 37 CFR 1.85(a).

Replacement drawing sheet(s) including the correction is required if the drawing(s) is objected to. See 37 CFR 1.121(d).

Priority under 35 U.S.C. § 119

12)☐ Acknowledgment is made of a claim for foreign priority under 35 U.S.C. § 119(a)-(d) or (f).

Certified copies:

a)☐ All b)☐ Some** c)☐ None of the:

1.☐ Certified copies of the priority documents have been received.

2.☐ Certified copies of the priority documents have been received in Application No. _____.

3.☐ Copies of the certified copies of the priority documents have been received in this National Stage application from the International Bureau (PCT Rule 17.2(a)).

** See the attached detailed Office action for a list of the certified copies not received.

Attachment(s)

1) ☒ Notice of References Cited (PTO-892)

2) ☒ Information Disclosure Statement(s) (PTO/SB/08a and/or PTO/SB/08b) Paper No(s)/Mail Date _____.

3) ☐ Interview Summary (PTO-413) Paper No(s)/Mail Date. _____ .

4) ☐ Other: _____.

DETAILED ACTION

The present application is being examined under the pre-AIA first to invent provisions.

Information Disclosure Statement

The information disclosure statement (IDS) submitted on 8/4/16 is in compliance with the provisions of 37 CFR 1.97. Accordingly, the information disclosure statement has been considered by the examiner.

Double Patenting

The nonstatutory double patenting rejection is based on a judicially created doctrine grounded in public policy (a policy reflected in the statute) so as to prevent the unjustified or improper timewise extension of the "right to exclude" granted by a patent and to prevent possible harassment by multiple assignees. A nonstatutory double patenting rejection is appropriate where the conflicting claims are not identical, but at least one examined application claim is not patentably distinct from the reference claim(s) because the examined application claim is either anticipated by, or would have been obvious over, the reference claim(s). See, e.g., *In re Berg*, 140 F.3d 1428, 46 USPQ2d 1226 (Fed. Cir. 1998); *In re Goodman*, 11 F.3d 1046, 29 USPQ2d 2010 (Fed. Cir. 1993); *In re Longi*, 759 F.2d 887, 225 USPQ 645 (Fed. Cir. 1985); *In re Van Ornum*, 686 F.2d 937, 214 USPQ 761 (CCPA 1982); *In re Vogel*, 422 F.2d 438, 164 USPQ 619 (CCPA 1970); *In re Thorington*, 418 F.2d 528, 163 USPQ 644 (CCPA 1969).

A timely filed terminal disclaimer in compliance with 37 CFR 1.321(c) or 1.321(d) may be used to overcome an actual or provisional rejection based on nonstatutory double patenting provided the reference application or patent either is shown to be commonly owned with the examined application, or claims an invention made as a result of activities undertaken within the scope of a joint research agreement. See MPEP § 717.02 for applications subject to examination under the first inventor to file provisions of the AIA as explained in MPEP § 2159. See MPEP §§ 706.02(l)(1) - 706.02(l)(3) for applications not subject to examination under the first inventor to file provisions of the AIA. A terminal disclaimer must be signed in compliance with 37 CFR 1.321(b).

The USPTO Internet website contains terminal disclaimer forms which may be used. Please visit www.uspto.gov/patent/patents-forms. The filing date of the application in which the form is filed

determines what form (e.g., PTO/SB/25, PTO/SB/26, PTO/AIA/25, or PTO/AIA/26) should be used. A web-based eTerminal Disclaimer may be filled out completely online using web-screens. An eTerminal Disclaimer that meets all requirements is auto-processed and approved immediately upon submission. For more information about eTerminal Disclaimers, refer to www.uspto.gov/patents/process/file/efs/guidance/eTD-info-I.jsp.

Claims 1-11 and 15-22 are rejected on the ground of nonstatutory double patenting as being unpatentable over claims 1 and 7 of U.S. Patent No. 9,388,595 in view of Porat (US 2011/0290707).

With regards to claim 1, claim 1 of Patent '595 discloses "a pool cleaning system comprising…a powered robotic surface cleaning vehicle… clean adjacent water containing surfaces of a pool… a camera… capture movement of the vehicle … within the pool... a controller in electronic communication with the camera… sensors… sense the water containing surfaces of the pool after the water containing surfaces of the pool have been cleaned... steer the vehicle so as to reclean the water… fails to satisfy a predetermined threshold". Claim 1 of Application '065 discloses "a pool cleaning system for cleaning debris from a submerged surface of a swimming pool comprising... a self-propelled pool cleaner… at least one camera to capture imagery of the pool… a controller, in electronic communication with the at least one camera… determine a cleanliness characteristic of the pool surface on which the cleaner has passed based on the camera imagery… direct movement of the cleaner… reclean a portion of the pool surface… fails to satisfy a predetermined threshold".

Claim 1 of Patent '595 does not disclose "a filter configured to retain the debris collected from the submerged surface of the swimming pool" and "an electric motor for enabling the rotation of the rotatably-mounted supports on the pool surface". However, Porat teaches a filter configured to retain the debris collected from the submerged surface of the swimming pool (paragraph 78, lines 8-11) and an electric motor for enabling the rotation of the rotatably-mounted supports on the pool surface (paragraph 78, lines 1-8). Therefore, it would have been obvious to one of ordinary skill in the art to combine the teachings of claim 1 of Patent '595 with Porat for effectively cleaning the pool of debris and other particles so as to provide a clean pool for people to swim.

Claim 2 of Application '065 is similar to claim 1 of Patent '595. Thus, claim 2 of Application '065 is anticipated by claim 1 of Patent '595. Claim 3 of Application '065 is similar to claim 1 of Patent '595. Thus, claim 3 of Application '065 is anticipated by claim 1 of Patent '595.

With regards to claim 4, claim 1 of Patent '595 does not disclose "wherein the electric motor is mechanically connected to at least one of the rotatably-mounted supports". However, Porat teaches wherein the electric motor is mechanically connected to at least one of the rotatably-mounted supports (paragraph 78, lines 1-8). Therefore, it would have been obvious to one of ordinary skill in the art to combine the teachings of claim 1 of Patent '595 with Porat for effectively cleaning the pool of debris and other particles so as to provide a clean pool for people to swim. Claim 5 of Application '065 is similar to claim 7 of Patent '595. Thus, claim 5 of Application '065 is anticipated by claim 7 of Patent '595. Claim 6 of Application '065 is similar to claim 1 of Patent '595. Thus, claim 6 of Application '065 is anticipated by claim 1 of Patent '595. Claim 7 of Application '065 is similar to claim 1 of Patent '595. Thus, claim 7 of Application '065 is anticipated by claim 1 of Patent '595. Claim 8 of Application '065 is similar to claim 1 of Patent '595. Thus, claim 8 of Application '065 is anticipated by claim 1 of Patent '595. Claim 9 of Application '065 is similar to claim 1 of Patent '595. Thus, claim 9 of Application '065 is anticipated by claim 1 of Patent '595. Claim 10 of Application '065 is similar to claim 1 of Patent '595. Thus, claim 10 of Application '065 is anticipated by claim 1 of Patent '595. Claim 11 of Application '065 is similar to claim 1 of Patent '595. Thus, claim 11 of Application '065 is anticipated by claim 1 of Patent '595.

With regards to claim 15, claim 1 of Patent '595 does not disclose "wherein the controller controls electric power provided to the electric motor". However, Porat teaches wherein the controller controls electric power provided to the electric motor (paragraph 78, lines 1-8). Therefore, it would have been obvious to one of ordinary skill in the art to combine the teachings of claim 1 of Patent '595 with Porat for effectively cleaning the pool of debris and other particles so as to provide a clean pool for people to swim.

With regards to claim 16, claim 1 of Patent '595 discloses "a pool cleaning system comprising…a powered robotic surface cleaning vehicle… clean adjacent water containing surfaces of a pool… a camera… capture movement of the vehicle … within the pool... a controller in electronic communication

with the camera… sensors… sense the water containing surfaces of the pool after the water containing surfaces of the pool have been cleaned... steer the vehicle so as to reclean the water… fails to satisfy a predetermined threshold". Claim 1 of Application '065 discloses " a pool cleaning system for cleaning debris from a submerged surface of a swimming pool comprising... a self-propelled pool cleaner… at least one camera to capture imagery of the pool surface… a controller in electronic communication with the at least one camera and the at least one sensor… direct movement of the cleaner…based on the cleanliness characteristic of the pool surface… reclean a portion of the pool surface… fails to satisfy a predetermined threshold".

Claim 1 of Patent '595 does not disclose "a filter configured to retain the debris collected from the submerged surface of the swimming pool" and "an electric motor for enabling the rotation of the rotatably-mounted supports on the pool surface". However, Porat teaches a filter configured to retain the debris collected from the submerged surface of the swimming pool (paragraph 78, lines 8-11) and an electric motor for enabling the rotation of the rotatably-mounted supports on the pool surface (paragraph 78, lines 1-8). Therefore, it would have been obvious to one of ordinary skill in the art to combine the teachings of claim 1 of Patent '595 with Porat for effectively cleaning the pool of debris and other particles so as to provide a clean pool for people to swim.

Claim 17 of Application '065 is similar to claim 1 of Patent '595. Thus, claim 17 of Application '065 is anticipated by claim 1 of Patent '595. Claim 18 of Application '065 is similar to claim 7 of Patent '595. Thus, claim 18 of Application '065 is anticipated by claim 7 of Patent '595. Claim 19 of Application '065 is similar to claim 1 of Patent '595. Thus, claim 19 of Application '065 is anticipated by claim 1 of Patent '595. Claim 20 of Application '065 is similar to claim 1 of Patent '595. Thus, claim 20 of Application '065 is anticipated by claim 1 of Patent '595. Claim 21 of Application '065 is similar to claim 1 of Patent '595. Thus, claim 21 of Application '065 is anticipated by claim 1 of Patent '595.

With regards to claim 22, claim 1 of Patent '595 does not disclose "wherein the controller controls electric power provided to the electric motor". However, Porat teaches wherein the controller controls electric power provided to the electric motor (paragraph 78, lines 1-8). Therefore, it would have been obvious to one of ordinary skill in the art to combine the teachings of claim 1 of Patent '595 with Porat for

effectively cleaning the pool of debris and other particles so as to provide a clean pool for people to swim.

Claims 12-13 are rejected on the ground of nonstatutory double patenting as being unpatentable over claim 1 of U.S. Patent No. 9,388,595 and Porat (US 2011/0290707) in view of Meniere (US 7,123,746).

With regards to claim 12, claim 1 of Patent '595 and Porat do not disclose "a dry station located remotely from the cleaner and in communication with the cleaner, wherein the dry station includes the controller". However, Meniere teaches a dry station located remotely from the cleaner and in communication with the cleaner, wherein the dry station includes the controller (col.11, lines 1-22). Therefore, it would have been obvious to one of ordinary skill in the art to combine Meniere with the combination of claim 1 of Patent '595 and Porat together as a whole for permitting remote observation of the pool during the cleaning process.

With regards to claim 13, of Patent '595 and Porat do not disclose "a dry station located remotely from the cleaner and in communication with the cleaner, wherein the controller is located remotely from the cleaner and the dry station". However, Meniere teaches a dry station located remotely from the cleaner and in communication with the cleaner, wherein the controller is located remotely from the cleaner and the dry station (col.11, lines 1-22). Therefore, it would have been obvious to one of ordinary skill in the art to combine Meniere with the combination of claim 1 of Patent '595 and Porat together as a whole for permitting remote observation of the pool during the cleaning process.

Claim 14 is rejected on the ground of nonstatutory double patenting as being unpatentable over claim 1 of U.S. Patent No. 9,388,595 and Porat (US 2011/0290707) in view of Hong (WO 2012/023676 A1).

With regards to claim 14, of Patent '595 and Porat do not disclose "a portable electronic device having a display, wherein the portable electronic device is configured to present a graphic on the display, the graphic depicting the submerged surface of the pool and those portions of the surface that

remain uncleaned as the cleaner traverses the pool surface". However, Hong teaches a portable electronic device having a display, wherein the portable electronic device is configured to present a graphic on the display, the graphic depicting the submerged surface of the pool and those portions of the surface that remain uncleaned as the cleaner traverses the pool surface (paragraph [32]). Therefore, it would have been obvious to one of ordinary skill in the art to combine Hong's teachings with the combination of claim 1 of Patent '595 and Porat together as a whole for permitting convenient observation of the pool at a remote location.

Examiner's Comment on 35 USC § 101

Claims **1-22** appear to correspond to concepts identified as abstract ideas by the courts. However, the claim(s) include additional elements that are sufficient to amount to significantly more than the judicial exception because (1) there is teaching in the specification about how the claimed invention improves a computer or other technology, such as specification at paragraph 14 on page 2, paragraph 19-20 on page 3, paragraph 37 on page 8, and (2) the claimed invention defines particular solution to a problem, such as claim limitation "a controller, in electronic communication with the at least one camera, to determine a cleanliness characteristic of the pool surface on which the cleaner has passed based on the camera imagery and generate a control signal to direct movement of the cleaner based on the cleanliness characteristic of the pool surface, wherein the control signal directs movement of the cleaner to reclean a portion of the pool surface where the cleanliness characteristic fails to satisfy a predefined threshold", and "a controller in electronic communication with the at least one camera and the at least one sensor to a generate a control signal to direct movement of the cleaner based on the cleanliness characteristic of the pool surface; and wherein the control signal directs movement of the cleaner to reclean a portion of the pool surface where the cleanliness characteristic fails to satisfy a predefined threshold".

Contact Information

Any inquiry concerning this communication or earlier communications from the examiner should be directed to ALLEN WONG whose telephone number is (571)272-7341. The examiner can normally be reached on Flex Monday to Thursday 9am-7pm.

Examiner interviews are available via telephone, in-person, and video conferencing using a USPTO supplied web-based collaboration tool. To schedule an interview, applicant is encouraged to use the USPTO Automated Interview Request (AIR) at http://www.uspto.gov/interviewpractice.

If attempts to reach the examiner by telephone are unsuccessful, the examiner's supervisor, SATH PERUNGAVOOR can be reached on (571) 272-7455. The fax phone number for the organization where this application or proceeding is assigned is 571-273-8300.

Information regarding the status of an application may be obtained from the Patent Application Information Retrieval (PAIR) system. Status information for published applications may be obtained from either Private PAIR or Public PAIR. Status information for unpublished applications is available through Private PAIR only. For more information about the PAIR system, see http://pair-direct.uspto.gov. Should you have questions on access to the Private PAIR system, contact the Electronic Business Center (EBC) at 866-217-9197 (toll-free). If you would like assistance from a USPTO Customer Service Representative or access to the automated information system, call 800-786-9199 (IN USA OR CANADA) or 571-272-1000.

/ALLEN WONG/
Primary Examiner, Art Unit 2488

Notice of References Cited	Application/Control No. 15/207,065	Applicant(s)/Patent Under Reexamination DURVASULA ET AL.	
	Examiner ALLEN WONG	Art Unit 2488	Page 1 of 1

U.S. PATENT DOCUMENTS

*		Document Number Country Code-Number-Kind Code	Date MM-YYYY	Name	CPC Classification	US Classification
*	A	US-2011/0290707 A1	12-2011	PORAT; Joseph	E04H4/1281	210/96.1
*	B	US-7,123,746 B2	10-2006	Meniere; Jerome	G01V8/10	345/419
	C	US-				
	D	US-				
	E	US-				
	F	US-				
	G	US-				
	H	US-				
	I	US-				
	J	US-				
	K	US-				
	L	US-				
	M	US-				

FOREIGN PATENT DOCUMENTS

*		Document Number Country Code-Number-Kind Code	Date MM-YYYY	Country	Name	CPC Classification
*	N	WO 2012/023676 A1	02-2012	WO	Hong	E02F 3/8866
	O					
	P					
	Q					
	R					
	S					
	T					

NON-PATENT DOCUMENTS

*		Include as applicable: Author, Title Date, Publisher, Edition or Volume, Pertinent Pages)
	U	
	V	
	W	
	X	

*A copy of this reference is not being furnished with this Office action. (See MPEP § 707.05(a).)
Dates in MM-YYYY format are publication dates. Classifications may be US or foreign.

Doc code: IDS
Doc description: Information Disclosure Statement (IDS) Filed

PTO/SB/08a (01-10)
Approved for use through 07/31/2012. OMB 0651-0031
U.S. Patent and Trademark Office; U.S. DEPARTMENT OF COMMERCE
Under the Paperwork Reduction Act of 1995, no persons are required to respond to a collection of information unless it contains a valid OMB control number.

INFORMATION DISCLOSURE STATEMENT BY APPLICANT

(Not for submission under 37 CFR 1.99)

Application Number	15207065
Filing Date	2016-07-11
First Named Inventor	Kameshwar DURVASULA
Art Unit	TBD
Examiner Name	TBD
Attorney Docket Number	214,790

U.S.PATENTS Remove

Examiner Initial*	Cite No	Patent Number	Kind Code[1]	Issue Date	Name of Patentee or Applicant of cited Document	Pages,Columns,Lines where Relevant Passages or Relevant Figures Appear
	1	5205174	A	1993-04-27	Silverman et al.	
	2	5435031	A	1995-07-25	Minami et al.	
	3	5507058	A	1996-04-16	Minami et al.	
	4	5613261	A	1997-03-25	Kawakami et al.	
	5	5886630	A	1999-03-23	Menoud	
	6	7123746	B2	2006-10-17	Meniere et al.	
	7	7362351	B2	2008-04-22	Meniere et al.	
	8	7398138	B2	2008-07-08	Emery et al.	

/ALLEN C WONG/ 11/02/2017

ALL REFERENCES CONSIDERED EXCEPT WHERE LINED THROUGH. /AW/

INFORMATION DISCLOSURE STATEMENT BY APPLICANT (Not for submission under 37 CFR 1.99)		
	Application Number	15207065
	Filing Date	2016-07-11
	First Named Inventor	Kameshwar DURVASULA
	Art Unit	TBD
	Examiner Name	TBD
	Attorney Docket Number	214,790

	9	7993600	B2	2011-08-09	Doyle et al.	
	10	8007653	B2	2011-08-30	Porat	
	11	8043070	B2	2011-10-25	Stiles, Jr. et al.	

If you wish to add additional U.S. Patent citation information please click the Add button. Add

U.S.PATENT APPLICATION PUBLICATIONS Remove

Examiner Initial*	Cite No	Publication Number	Kind Code[1]	Publication Date	Name of Patentee or Applicant of cited Document	Pages,Columns,Lines where Relevant Passages or Relevant Figures Appear
	1	20020097322	A1	2002-07-25	Monroe et al.	
	2	20040025268	A1	2004-02-12	Porat	
	3	20040040581	A1	2004-03-04	Bruwer	
	4	20070094817	A1	2007-05-03	Stoltz et al.	
	5	20100299016	A1	2010-11-25	Benzler et al.	
	6	20110091329	A1	2011-04-21	Stiles, Jr. et al.	

/ALLEN C WONG/ 11/02/2017

ALL REFERENCES CONSIDERED EXCEPT WHERE LINED THROUGH. /AW/

INFORMATION DISCLOSURE STATEMENT BY APPLICANT (Not for submission under 37 CFR 1.99)		
	Application Number	15207065
	Filing Date	2016-07-11
	First Named Inventor	Kameshwar DURVASULA
	Art Unit	TBD
	Examiner Name	TBD
	Attorney Docket Number	214,790

	7	20110301752	A1	2011-12-08	Finezilber	
	8	20130151061	A1	2013-06-13	Hong	
	9	20130269097	A1	2013-10-17	Alammari	
	10	20140009748	A1	2014-01-09	Leonessa et al.	

If you wish to add additional U.S. Published Application citation information please click the Add button. Add

FOREIGN PATENT DOCUMENTS Remove

Examiner Initial*	Cite No	Foreign Document Number[3]	Country Code[2] i	Kind Code[4]	Publication Date	Name of Patentee or Applicant of cited Document	Pages,Columns,Lines where Relevant Passages or Relevant Figures Appear	T[5]
	1	101139007	CN	A	2008-03-00			
	2	0687964	EP	A1	1995-12-00			
	3	0811432	EP	A2	1997-12-00			
	4	S6162905	JP	A	1986-03-00			
	5	2004019295	WO	A1	2004-03-00			

/ALLEN C WONG/ 11/02/2017

ALL REFERENCES CONSIDERED EXCEPT WHERE LINED THROUGH. /AW/

INFORMATION DISCLOSURE STATEMENT BY APPLICANT

(Not for submission under 37 CFR 1.99)

Application Number	15207065
Filing Date	2016-07-11
First Named Inventor	Kameshwar DURVASULA
Art Unit	TBD
Examiner Name	TBD
Attorney Docket Number	214,790

	6	2009031361	WO	A1	2009-12-00			
	7	2012023676	WO	A1	2012-02-00			
	8	WO-2012/023676	WO	A1	2012-02-00			

If you wish to add additional Foreign Patent Document citation information please click the Add button Add

NON-PATENT LITERATURE DOCUMENTS Remove

Examiner Initials*	Cite No	Include name of the author (in CAPITAL LETTERS), title of the article (when appropriate), title of the item (book, magazine, journal, serial, symposium, catalog, etc), date, pages(s), volume-issue number(s), publisher, city and/or country where published.	T[5]
	1	Spanish Patent No. P201331047 - State of Art Search Report from the ES Patent and Trademark Office; mailed Feb. 3, 2015; 1 page.	

If you wish to add additional non-patent literature document citation information please click the Add button Add

EXAMINER SIGNATURE

Examiner Signature	/ALLEN C WONG/	Date Considered	11/02/2017

*EXAMINER: Initial if reference considered, whether or not citation is in conformance with MPEP 609. Draw line through a citation if not in conformance and not considered. Include copy of this form with next communication to applicant.

[1] See Kind Codes of USPTO Patent Documents at www.USPTO.GOV or MPEP 901.04. [2] Enter office that issued the document, by the two-letter code (WIPO Standard ST.3). [3] For Japanese patent documents, the indication of the year of the reign of the Emperor must precede the serial number of the patent document. [4] Kind of document by the appropriate symbols as indicated on the document under WIPO Standard ST.16 if possible. [5] Applicant is to place a check mark here if English language translation is attached.

ALL REFERENCES CONSIDERED EXCEPT WHERE LINED THROUGH. /AW/

EAST Search History

EAST Search History (Prior Art)

Ref #	Hits	Search Query	DBs	Default Operator	Plurals	Time Stamp
S1	208	348/114.ccls.	US-PGPUB; USPAT; USOCR; FPRS; EPO; JPO; DERWENT; IBM_TDB	OR	OFF	2017/10/26 10:25
S2	3079	E04H4/1654.cpc.	US-PGPUB; USPAT; USOCR; FPRS; EPO; JPO; DERWENT; IBM_TDB	OR	OFF	2017/10/26 10:25
S3	7842	H04N5/23203.cpc.	US-PGPUB; USPAT; USOCR; FPRS; EPO; JPO; DERWENT; IBM_TDB	OR	OFF	2017/10/26 10:26
S4	20074	H04N7/18.cpc.	US-PGPUB; USPAT; USOCR; FPRS; EPO; JPO; DERWENT; IBM_TDB	OR	OFF	2017/10/26 10:26
S5	8032	H04N2005/2255.cpc.	US-PGPUB; USPAT; USOCR; FPRS; EPO; JPO; DERWENT; IBM_TDB	OR	OFF	2017/10/26 10:26
S6	4	(underwater or (under adj water)) with clean$4 with pool with (specif$4 or identif$4)	US-PGPUB; USPAT; USOCR; FPRS; EPO; JPO; DERWENT; IBM_TDB	OR	OFF	2017/10/26 10:54
S7	522	(underwater or (under adj water)) with clean$4 with pool	US-PGPUB; USPAT; USOCR; FPRS; EPO; JPO; DERWENT; IBM_TDB	OR	OFF	2017/10/26 10:54
S8	0	S7 and S1	US-PGPUB; USPAT; USOCR; FPRS; EPO; JPO; DERWENT; IBM_TDB	OR	OFF	2017/10/26 10:54
S9	194	S7 and S2	US-PGPUB; USPAT; USOCR; FPRS; EPO; JPO; DERWENT; IBM_TDB	OR	OFF	2017/10/26 10:54
S10	0	S7 and S3	US-PGPUB; USPAT; USOCR; FPRS; EPO; JPO; DERWENT; IBM_TDB	OR	OFF	2017/10/26 10:54

S11	0	S7 and S4	US-PGPUB; USPAT; USOCR; FPRS; EPO; JPO; DERWENT; IBM_TDB	OR	OFF	2017/10/26 10:54
S12	0	S7 and S5	US-PGPUB; USPAT; USOCR; FPRS; EPO; JPO; DERWENT; IBM_TDB	OR	OFF	2017/10/26 10:54
S13	128	pool with clean$3 with robot$4 with (camera$1 or sensor$1)	US-PGPUB; USPAT; USOCR; FPRS; EPO; JPO; DERWENT; IBM_TDB	OR	OFF	2017/10/26 10:55
S14	50	pool with clean$3 with robot$4 with (camera$1 or sensor$1) with (controller$1 or processor$1 or CPU)	US-PGPUB; USPAT; USOCR; FPRS; EPO; JPO; DERWENT; IBM_TDB	OR	OFF	2017/10/26 10:55
S15	22	S13 and S7	US-PGPUB; USPAT; USOCR; FPRS; EPO; JPO; DERWENT; IBM_TDB	OR	OFF	2017/10/26 10:56
S16	35	pool with clean$3 with robot$4 with (camera$1 or imager$1 or CCD)	US-PGPUB; USPAT; USOCR; FPRS; EPO; JPO; DERWENT; IBM_TDB	OR	OFF	2017/10/26 10:57
S17	871	pool with clean$3 with robot$4	US-PGPUB; USPAT; USOCR; FPRS; EPO; JPO; DERWENT; IBM_TDB	OR	OFF	2017/10/26 10:58
S18	958	pool same clean$3 with robot$4	US-PGPUB; USPAT; USOCR; FPRS; EPO; JPO; DERWENT; IBM_TDB	OR	OFF	2017/10/26 10:58
S19	2	S17 and S1	US-PGPUB; USPAT; USOCR; FPRS; EPO; JPO; DERWENT; IBM_TDB	OR	OFF	2017/10/26 10:58
S20	518	S17 and S2	US-PGPUB; USPAT; USOCR; FPRS; EPO; JPO; DERWENT; IBM_TDB	OR	OFF	2017/10/26 10:58
S21	9	S17 and S3	US-PGPUB; USPAT; USOCR; FPRS; EPO; JPO; DERWENT; IBM_TDB	OR	OFF	2017/10/26 10:58
S22	9	S17 and S4	US-PGPUB; USPAT; USOCR; FPRS; EPO; JPO; DERWENT; IBM_TDB	OR	OFF	2017/10/26 10:58

S23	9	S17 and S5	US-PGPUB; USPAT; USOCR; FPRS; EPO; JPO; DERWENT; IBM_TDB	OR	OFF	2017/10/26 10:58
S24	2	S18 and S1	US-PGPUB; USPAT; USOCR; FPRS; EPO; JPO; DERWENT; IBM_TDB	OR	OFF	2017/10/26 10:59
S25	535	S18 and S2	US-PGPUB; USPAT; USOCR; FPRS; EPO; JPO; DERWENT; IBM_TDB	OR	OFF	2017/10/26 10:59
S26	9	S18 and S3	US-PGPUB; USPAT; USOCR; FPRS; EPO; JPO; DERWENT; IBM_TDB	OR	OFF	2017/10/26 10:59
S27	9	S18 and S4	US-PGPUB; USPAT; USOCR; FPRS; EPO; JPO; DERWENT; IBM_TDB	OR	OFF	2017/10/26 10:59
S28	9	S18 and S5	US-PGPUB; USPAT; USOCR; FPRS; EPO; JPO; DERWENT; IBM_TDB	OR	OFF	2017/10/26 10:59
S29	21	(portable or miniature) near4 display$4 with pool	US-PGPUB; USPAT; USOCR; FPRS; EPO; JPO; DERWENT; IBM_TDB	OR	OFF	2017/10/26 10:59
S30	328	(portable or miniature) near4 display$4 with water	US-PGPUB; USPAT; USOCR; FPRS; EPO; JPO; DERWENT; IBM_TDB	OR	OFF	2017/10/26 11:00
S31	1	S30 and S1	US-PGPUB; USPAT; USOCR; FPRS; EPO; JPO; DERWENT; IBM_TDB	OR	OFF	2017/10/26 11:00
S32	2	S30 and S2	US-PGPUB; USPAT; USOCR; FPRS; EPO; JPO; DERWENT; IBM_TDB	OR	OFF	2017/10/26 11:00
S33	2	S30 and S3	US-PGPUB; USPAT; USOCR; FPRS; EPO; JPO; DERWENT; IBM_TDB	OR	OFF	2017/10/26 11:00
S34	2	S30 and S4	US-PGPUB; USPAT; USOCR; FPRS; EPO; JPO; DERWENT; IBM_TDB	OR	OFF	2017/10/26 11:00

S35	2	S30 and S5	US-PGPUB; USPAT; USOCR; FPRS; EPO; JPO; DERWENT; IBM_TDB	OR	OFF	2017/10/26 11:00
S36	48	(underwater or (under adj water)) with clean$4 with pool with robot$4	US-PGPUB; USPAT; USOCR; FPRS; EPO; JPO; DERWENT; IBM_TDB	OR	OFF	2017/10/26 11:01
S37	0	((underwater or pool) adj clean$3) with filter$3 with sensor$1 with (camera$1 or imager$1 or CCD or CMOS)	US-PGPUB; USPAT; USOCR; FPRS; EPO; JPO; DERWENT; IBM_TDB	OR	OFF	2017/11/02 11:35
S38	2	((underwater or pool) adj clean$3) same filter$3 same sensor$1 same (camera$1 or imager$1 or CCD or CMOS)	US-PGPUB; USPAT; USOCR; FPRS; EPO; JPO; DERWENT; IBM_TDB	OR	OFF	2017/11/02 11:36
S39	125	((underwater or pool) adj clean$3) same filter$3 same sensor$1	US-PGPUB; USPAT; USOCR; FPRS; EPO; JPO; DERWENT; IBM_TDB	OR	OFF	2017/11/02 11:36
S40	5	((underwater or pool) adj clean$3) same filter$3 same(camera$1 or imager$1 or CCD or CMOS)	US-PGPUB; USPAT; USOCR; FPRS; EPO; JPO; DERWENT; IBM_TDB	OR	OFF	2017/11/02 11:36
S41	2	filter$3 with (camera$1 or imager$1 or CMOS or CCD) with clean$3 near4 (pool or underwater)	US-PGPUB; USPAT; USOCR; FPRS; EPO; JPO; DERWENT; IBM_TDB	OR	OFF	2017/11/02 17:50
S42	0	reclean$3 near4 pool near4 surface$1 with (cleanliness or cleansing or cleanse or clean) near4 threshold$1	US-PGPUB; USPAT; USOCR; FPRS; EPO; JPO; DERWENT; IBM_TDB	OR	OFF	2017/11/02 17:57
S43	6	sensor$1 with (cleanliness or cleansing or cleanse or clean) with (pool or underwater) near2 cleaner	US-PGPUB; USPAT; USOCR; FPRS; EPO; JPO; DERWENT; IBM_TDB	OR	OFF	2017/11/02 17:59
S44	149	(direct$3 or guid$3) near4 (movement or motion) near8 (pool or underwater) near2 cleaner	US-PGPUB; USPAT; USOCR; FPRS; EPO; JPO; DERWENT; IBM_TDB	OR	OFF	2017/11/02 18:00
S45	3	(direct$3 or guid$3) near4 (movement or motion) near8 (pool or underwater) near2 cleaner with (threshold or value or limit)	US-PGPUB; USPAT; USOCR; FPRS; EPO; JPO; DERWENT; IBM_TDB	OR	OFF	2017/11/02 18:00
S46	0	(imager$1 or camera$1) with sensor$1 with (guid$3 or direct$3) near2 ((pool or underwater) near2 cleaner)	US-PGPUB; USPAT; USOCR; FPRS; EPO; JPO; DERWENT; IBM_TDB	OR	OFF	2017/11/02 18:02

S47	2	(imager$1 or camera$1) with sensor$1 same (guid$3 or direct$3) near2 ((pool or underwater) near2 cleaner)	US-PGPUB; USPAT; USOCR; FPRS; EPO; JPO; DERWENT; IBM_TDB	OR	OFF	2017/11/02 18:02
S48	7	(imager$1 or camera$1) with sensor$1 and (guid$3 or direct$3) near2 ((pool or underwater) near2 cleaner)	US-PGPUB; USPAT; USOCR; FPRS; EPO; JPO; DERWENT; IBM_TDB	OR	OFF	2017/11/02 18:02
S49	208	348/114.ccls.	US-PGPUB; USPAT; USOCR; FPRS; EPO; JPO; DERWENT; IBM_TDB	OR	OFF	2017/11/02 18:03
S50	0	S44 and S49	US-PGPUB; USPAT; USOCR; FPRS; EPO; JPO; DERWENT; IBM_TDB	OR	OFF	2017/11/02 18:03
S51	3081	E04H4/1654.cpc.	US-PGPUB; USPAT; USOCR; FPRS; EPO; JPO; DERWENT; IBM_TDB	OR	OFF	2017/11/02 18:03
S52	125	S44 and S51	US-PGPUB; USPAT; USOCR; FPRS; EPO; JPO; DERWENT; IBM_TDB	OR	OFF	2017/11/02 18:03
S53	7864	H04N5/23203.cpc.	US-PGPUB; USPAT; USOCR; FPRS; EPO; JPO; DERWENT; IBM_TDB	OR	OFF	2017/11/02 18:03
S54	1	S44 and S53	US-PGPUB; USPAT; USOCR; FPRS; EPO; JPO; DERWENT; IBM_TDB	OR	OFF	2017/11/02 18:03
S55	20113	H04N7/18.cpc.	US-PGPUB; USPAT; USOCR; FPRS; EPO; JPO; DERWENT; IBM_TDB	OR	OFF	2017/11/02 18:03
S56	1	S44 and S55	US-PGPUB; USPAT; USOCR; FPRS; EPO; JPO; DERWENT; IBM_TDB	OR	OFF	2017/11/02 18:03
S57	8045	H04N2005/2255.cpc.	US-PGPUB; USPAT; USOCR; FPRS; EPO; JPO; DERWENT; IBM_TDB	OR	OFF	2017/11/02 18:03
S58	1	S44 and S57	US-PGPUB; USPAT; USOCR; FPRS; EPO; JPO; DERWENT; IBM_TDB	OR	OFF	2017/11/02 18:03

S59	159	(direct$3 or guid$3) near4 (movement or motion) with (pool or underwater) near2 cleaner	US-PGPUB; USPAT; USOCR; FPRS; EPO; JPO; DERWENT; IBM_TDB	OR	OFF	2017/11/02 18:03

11/2/2017 8:40:10 PM
C:\Users\awong1\Documents\EAST\Workspaces\15207065_110217.wsp

Search Notes	Application/Control No.	Applicant(s)/Patent Under Reexamination
	15207065	DURVASULA ET AL.
	Examiner	**Art Unit**
	ALLEN WONG	2488

CPC- SEARCHED

Symbol	Date	Examiner
E04H 4/1654; H04N 5/23203; H04N 7/18; H04N 2005/2255	10/26/17	AW

CPC COMBINATION SETS - SEARCHED

Symbol	Date	Examiner

US CLASSIFICATION SEARCHED

Class	Subclass	Date	Examiner
348	114	10/26/17	AW

* See search history printout included with this form or the SEARCH NOTES box below to determine the scope of the search.

SEARCH NOTES

Search Notes	Date	Examiner
E04H 4/1654; H04N 5/23203; H04N 7/18; H04N 2005/2255 (see search history printout)	11/2/17	AW

INTERFERENCE SEARCH

US Class/ CPC Symbol	US Subclass / CPC Group	Date	Examiner

	/ALLEN WONG/ Primary Examiner.Art Unit 2488

Index of Claims	Application/Control No.	Applicant(s)/Patent Under Reexamination
	15207065	DURVASULA ET AL.
	Examiner	**Art Unit**
	ALLEN WONG	2488

✓	Rejected	-	Cancelled	N	Non-Elected	A	Appeal
=	Allowed	÷	Restricted	I	Interference	O	Objected

☐ Claims renumbered in the same order as presented by applicant ☐ CPA ☐ T.D. ☐ R.1.47

CLAIM		DATE								
Final	Original	11/02/2017								
	1	✓								
	2	✓								
	3	✓								
	4	✓								
	5	✓								
	6	✓								
	7	✓								
	8	✓								
	9	✓								
	10	✓								
	11	✓								
	12	✓								
	13	✓								
	14	✓								
	15	✓								
	16	✓								
	17	✓								
	18	✓								
	19	✓								
	20	✓								
	21	✓								
	22	✓								

UNITED STATES PATENT AND TRADEMARK OFFICE

UNITED STATES DEPARTMENT OF COMMERCE
United States Patent and Trademark Office
Address: COMMISSIONER FOR PATENTS
P.O. Box 1450
Alexandria, Virginia 22313-1450
www.uspto.gov

BIB DATA SHEET

CONFIRMATION NO. 6686

SERIAL NUMBER	FILING or 371(c) DATE	CLASS	GROUP ART UNIT	ATTORNEY DOCKET NO.
15/207,065	07/11/2016 RULE	348	2488	214,790

APPLICANTS
AQUA PRODUCTS, INC., Cedar Grove, NJ;

INVENTORS
Kameshwar Durvasula, Garfield, NJ;
William Londono Correa, Bloomfield, NJ;

**** CONTINUING DATA ***************************
This application is a CON of 13/545,918 07/10/2012 PAT 9388595

**** FOREIGN APPLICATIONS ***************************

**** IF REQUIRED, FOREIGN FILING LICENSE GRANTED ****
07/25/2016

Foreign Priority claimed	☐ Yes ☑ No		STATE OR COUNTRY	SHEETS DRAWINGS	TOTAL CLAIMS	INDEPENDENT CLAIMS
35 USC 119(a-d) conditions met	☐ Yes ☐ No	☐ Met after Allowance				
Verified and Acknowledged	/ALLEN C WONG/ Examiner's Signature	____ Initials	NJ	4	22	2

ADDRESS
ABELMAN, FRAYNE & SCHWAB
666 THIRD AVENUE, 10TH FLOOR
NEW YORK, NY 10017
UNITED STATES

TITLE
POOL CLEANING SYSTEM AND METHOD TO AUTOMATICALLY CLEAN SURFACES OF A POOL USING IMAGES FROM A CAMERA

FILING FEE RECEIVED		
1900	FEES: Authority has been given in Paper No._____ to charge/credit DEPOSIT ACCOUNT No._____ for following:	☐ All Fees ☐ 1.16 Fees (Filing) ☐ 1.17 Fees (Processing Ext. of time) ☐ 1.18 Fees (Issue) ☐ Other _____ ☐ Credit

UNITED STATES PATENT AND TRADEMARK OFFICE

UNITED STATES DEPARTMENT OF COMMERCE
United States Patent and Trademark Office
Address: COMMISSIONER FOR PATENTS
P.O. Box 1450
Alexandria, Virginia 22313-1450
www.uspto.gov

APPLICATION NUMBER	FILING OR 371(C) DATE	FIRST NAMED APPLICANT	ATTY. DOCKET NO./TITLE
15/207,065	07/11/2016	Kameshwar Durvasula	214,790

CONFIRMATION NO. 6686

38137
ABELMAN, FRAYNE & SCHWAB
666 THIRD AVENUE, 10TH FLOOR
NEW YORK, NY 10017

PUBLICATION NOTICE

OC000000086968768

Title:POOL CLEANING SYSTEM AND METHOD TO AUTOMATICALLY CLEAN SURFACES OF A POOL USING IMAGES FROM A CAMERA

Publication No.US-2016-0319559-A1
Publication Date:11/03/2016

NOTICE OF PUBLICATION OF APPLICATION

The above-identified application will be electronically published as a patent application publication pursuant to 37 CFR 1.211, et seq. The patent application publication number and publication date are set forth above.

The publication may be accessed through the USPTO's publically available Searchable Databases via the Internet at www.uspto.gov. The direct link to access the publication is currently http://www.uspto.gov/patft/.

The publication process established by the Office does not provide for mailing a copy of the publication to applicant. A copy of the publication may be obtained from the Office upon payment of the appropriate fee set forth in 37 CFR 1.19(a)(1). Orders for copies of patent application publications are handled by the USPTO's Office of Public Records. The Office of Public Records can be reached by telephone at (703) 308-9726 or (800) 972-6382, by facsimile at (703) 305-8759, by mail addressed to the United States Patent and Trademark Office, Office of Public Records, Alexandria, VA 22313-1450 or via the Internet.

In addition, information on the status of the application, including the mailing date of Office actions and the dates of receipt of correspondence filed in the Office, may also be accessed via the Internet through the Patent Electronic Business Center at www.uspto.gov using the public side of the Patent Application Information and Retrieval (PAIR) system. The direct link to access this status information is currently http://pair.uspto.gov/. Prior to publication, such status information is confidential and may only be obtained by applicant using the private side of PAIR.

Further assistance in electronically accessing the publication, or about PAIR, is available by calling the Patent Electronic Business Center at 1-866-217-9197.

Office of Data Managment, Application Assistance Unit (571) 272-4000, or (571) 272-4200, or 1-888-786-0101

UNITED STATES PATENT AND TRADEMARK OFFICE

UNITED STATES DEPARTMENT OF COMMERCE
United States Patent and Trademark Office
Address: COMMISSIONER FOR PATENTS
P.O. Box 1450
Alexandria, Virginia 22313-1450
www.uspto.gov

APPLICATION NUMBER	FILING OR 371(C) DATE	FIRST NAMED APPLICANT	ATTY. DOCKET NO./TITLE
15/207,065	07/11/2016	Kameshwar Durvasula	214,790

CONFIRMATION NO. 6686

POA ACCEPTANCE LETTER

38137
ABELMAN, FRAYNE & SCHWAB
666 THIRD AVENUE, 10TH FLOOR
NEW YORK, NY 10017

OC000000085167432

Date Mailed: 08/17/2016

NOTICE OF ACCEPTANCE OF POWER OF ATTORNEY

This is in response to the Power of Attorney filed 08/05/2016.

The Power of Attorney in this application is accepted. Correspondence in this application will be mailed to the above address as provided by 37 CFR 1.33.

Questions about the contents of this notice and the requirements it sets forth should be directed to the Office of Data Management, Application Assistance Unit, at **(571) 272-4000** or **(571) 272-4200** or **1-888-786-0101**.

/dtdinh/

WYBOTICS EX1037
Wybotics v. Zodiac
Page 074

IN THE UNITED STATES PATENT AND TRADEMARK OFFICE

Applicant:	DURVASULA, Kameshwar	Examiner: Not Yet Assigned
Serial no.:	15/207,065	Group Art Unit: 3723
Filed:	July 11, 2016	Confirmation No.: 6686
Title:	POOL CLEANING SYSTEM AND METHOD TO AUTOMATICALLY CLEAN SURFACES OF A POOL USING IMAGES FROM A CAMERA	

RESPONSE TO INFORMATIONAL NOTICE TO APPLICANT

Dated: August 5, 2016

Commissioner for Patents
P.O. Box 1450
Alexandria, VA 22313-1450

In response to the Informational Notice to Applicant of July 26, 2016 , enclosed please find the executed Declaration.

It is not believed that any fees are required with this submission. However, if any fees are due, the Commissioner is hereby authorized to charge any deficiency or credit any overpayment to Deposit Account No. 01-0035.

Respectfully submitted,

/Steven M. Hertzberg/
Steven M. Hertzberg
Attorney for Applicants
Reg. No. 41,834

Customer No.: 38,137
ABELMAN, FRAYNE & SCHWAB
666 Third Avenue, 10th Floor
New York, New York 10017-5621
Tel: (212) 949-9022 Fax: (212) 949-919

UNITED STATES

DECLARATION FOR UTILITY AND DESIGN PATENT APPLICATIONS	Attorney Docket No.	214,790
	First Named Inventor	DURVASULA, Kameshwar
	Application No.	15/207,065
	Filing Date	July 11, 2016
	Art Unit	
	Examiner Name	

TITLE OF INVENTION: POOL CLEANING SYSTEM AND METHOD TO AUTOMATICALLY CLEAN SURFACES OF A POOL USING IMAGES FROM A CAMERA

As an inventor named below, I hereby declare that:
My residence, post office address and citizenship are as stated next to my name:
I believe that I am the original inventor (if only one name is listed below) or an original joint inventor (if multiple inventors are named below) of a claimed invention in the application.

This declaration is directed to:

CHECK APPROPRIATE BOX

[ ] the attached application, or

[X] United States application no. 15/207,065 or PCT International application no. _____
filed on July 11, 2016
and, if appropriate, an amendment filed on _____.

The above-identified application was made or authorized to be made by me.
I hereby authorize a patent attorney responsible for this application to complete this Declaration by the entry of the application number, application filing date, and attorney docket number, if necessary.

I hereby state that I have reviewed and understand the contents of the specification of the above-identified application, including the claims, as amended by any amendment referred to above.
I acknowledge my duty to disclose to the US Patent and Trademark Office all information known to me to be material to patentability as defined in 37 CFR 1.56, including for continuation-in-part applications, material information which became available between the filing date of the prior application and the national or PCT international filing date of the continuation-in-part application.
I hereby acknowledge that any willful false statement made in this declaration is punishable under 18 USC §1001 by fine or imprisonment of not more than five (5) years, or both.

Authorization To Permit Access To Application By Participating Office

If applicable, I hereby grant the USPTO authority to provide access to the above-identified patent application by the European Patent Office (EPO), the Japan Patent Office (JPO), the Korean Intellectual Property Office (KIPO), the World Intellectual Property Office (WIPO) and any other intellectual property offices in which a foreign application is filed claiming priority to the above-identified application. In accordance with 37 CFR §1.14(h)(3), access will be provided to prepare a copy of the above-identified patent application with respect to: (1) the above-identified patent application as filed; (2) any foreign application to which the above-identified patent application claims priority under 35 U.S.C.§119(a)-(d) if a copy of the foreign application that satisfies the certified copy requirement of 37 CFR§1.55 has been filed in the above-identified patent application; and (3) any US application as filed from which benefit is sought in the above-identified patent application. In accordance with 37 CFR§1.14(c), access may be provided to information concerning the date of the filing of this Authorization to Permit Access to Application by Participating Offices.

Direct Telephone Calls To:

ABELMAN, FRAYNE & SCHWAB
(212) 949-9022

Send Correspondence To:

The Address at Customer Number 38,137

I hereby declare that all statements made herein of my own knowledge are true and that all statements made on information and belief are believed to be true; and further that these statements were made with the knowledge that willful false statements and the like so made are punishable by fine or imprisonment of not more than five (5) years, or both under Section 1001 of Title 18 of the United States Code and that such willful false statements may jeopardize the validity of the application or any patent issued thereon.

DETAILS REQUIRED FOR EACH INVENTOR

Full Name of Sole or First Inventor	Inventor's Signature	Date
Kameshwar DURVASULA		14 July 2016
Residence		Citizenship
8 Holly Lane, Garfield, New Jersey 07026		US
Post Office Address		
Same as above		
Full Name of Second Joint Inventor, If Any	Inventor's Signature	Date
William Londono CORREA		14 July 2016
Residence		Citizenship
499 Beardsley Avenue, Bloomfield, New Jersey 07009		US
Post Office Address		
Same as above		
Full Name of Third Joint Inventor, If Any	Inventor's Signature	Date
Residence		Citizenship
Post Office Address		
Same as above		
Full Name of Fourth Joint Inventor, If Any	Inventor's Signature	Date
Residence		Citizenship
Post Office Address		
Full Name of Fifth Joint Inventor, If Any	Inventor's Signature	Date
Residence		Citizenship
Post Office Address		
Full Name of Sixth Joint Inventor, If Any	Inventor's Signature	Date
Residence		Citizenship
Post Office Address		
Full Name of Seventh Joint Inventor, If Any	Inventor's Signature	Date
Residence		Citizenship
Post Office Address		
Full Name of Eight Joint Inventor, If Any	Inventor's Signature	Date
Residence		Citizenship
Post Office Address		

WYBOTICS EX1037
Wybotics v. Zodiac
Page 077

PTO/AIA/80 (07-12)
Approved for use through 11/30/2014. OMB 0651-0035
U.S. Patent and Trademark Office; U.S. DEPARTMENT OF COMMERCE
Under the Paperwork Reduction Act of 1995, no persons are required to respond to a collection of information unless it displays a valid OMB control number.

POWER OF ATTORNEY TO PROSECUTE APPLICATIONS BEFORE THE USPTO

I hereby revoke all previous powers of attorney given in the application identified in the attached statement under 37 CFR 3.73(c).

I hereby appoint:

[■] Practitioners associated with Customer Number: 38137

OR

[ ] Practitioner(s) named below (if more than ten patent practitioners are to be named, then a customer number must be used):

Name	Registration Number	Name	Registration Number

As attorney(s) or agent(s) to represent the undersigned before the United States Patent and Trademark Office (USPTO) in connection with any and all patent applications assigned only to the undersigned according to the USPTO assignment records or assignments documents attached to this form in accordance with 37 CFR 3.73(c).

Please change the correspondence address for the application identified in the attached statement under 37 CFR 3.73(c) to:

[■] The address associated with Customer Number: 38137

OR

[ ]	Firm or Individual Name			
	Address			
	City		State	Zip
	Country			
	Telephone		Email	

Assignee Name and Address: AQUA PRODUCTS, INC.
280 Grove Avenue
Cedar Grove, New Jersey 07009

A copy of this form, together with a statement under 37 CFR 3.73(c) (Form PTO/AIA/96 or equivalent) is required to be Filed in each application in which this form is used. The statement under 37 CFR 3.73(c) may be completed by one of The practitioners appointed in this form, and must identify the application in which this Power of Attorney is to be filed.

SIGNATURE of Assignee of Record

The individual whose signature and title is supplied below is authorized to act on behalf of the assignee

Signature	Ethan Hanan	Date	7/14/2016
Name	Ethan Hanan	Telephone	973-857-2700
Title	VP R&D		

This collection of information is required by 37 CFR 1.31, 1.32 and 1.33. The information is required to obtain or retain a benefit by the public which is to file (and by the USPTO to process) an application. Confidentiality is governed by 35 U.S.C. 122 and 37 CFR 1.11 and 1.14. This collection is estimated to take 3 minutes to complete, including gathering, preparing, and submitting the completed application form to the USPTO. Time will vary depending upon the individual case. Any comments on the amount of time you require to complete this form and/or suggestions for reducing this burden, should be sent to the Chief Information Officer, U.S. Patent and Trademark Office, U.S. Department of Commerce, P.O. Box 1450, Alexandria, VA 22313-1450. DO NOT SEND FEES OR COMPLETED FORMS TO THIS ADDRESS. **SEND TO: Commissioner for Patents, P.O. Box 1450, Alexandria, VA 22313-1450.**

If you need assistance in completing the form, call 1-800-PTO-9199 and select option 2.

PTO/AIA/96 (08-12)
Approved for use through 01/31/2013. OMB 0651-0031
U.S. Patent and Trademark Office; U.S. DEPARTMENT OF COMMERCE
Under the Paperwork Reduction Act of 1995, no persons are required to respond to a collection of information unless it displays a valid OMB control number.

STATEMENT UNDER 37 CFR 3.73(c)

Applicant/Patent Owner: Aqua Products, Inc.

Application No./Patent No.: 15/207,065 Filed/Issue Date: July 11, 2016

Titled: POOL CLEANING SYSTEM AND METHOD TO AUTOMATICALLY CLEAN SURFACES OF A POOL USING IMAGES FROM A CAMERA

Aqua Products, Inc., a Company

(Name of Assignee) (Type of Assignee, e.g., corporation, partnership, university, government agency, etc.)

states that, for the patent application/patent identified above, it is (choose **one** of options 1, 2, 3 or 4 below):

1. ☑ The assignee of the entire right, title, and interest.

2. ☐ An assignee of less than the entire right, title, and interest (check applicable box):

☐ The extent (by percentage) of its ownership interest is _____%. Additional Statement(s) by the owners holding the balance of the interest must be submitted to account for 100% of the ownership interest.

☐ There are unspecified percentages of ownership. The other parties, including inventors, who together own the entire right, title and interest are:

Additional Statement(s) by the owner(s) holding the balance of the interest must be submitted to account for the entire right, title, and interest.

3. ☐ The assignee of an undivided interest in the entirety (a complete assignment from one of the joint inventors was made). The other parties, including inventors, who together own the entire right, title, and interest are:

Additional Statement(s) by the owner(s) holding the balance of the interest must be submitted to account for the entire right, title, and interest.

4. ☐ The recipient, via a court proceeding or the like (*e.g.*, bankruptcy, probate), of an undivided interest in the entirety (a complete transfer of ownership interest was made). The certified document(s) showing the transfer is attached.

The interest identified in option 1, 2 or 3 above (not option 4) is evidenced by either (choose **one** of options A or B below):

A. ☑ An assignment from the inventor(s) of the patent application/patent identified above. The assignment was recorded in the United States Patent and Trademark Office at Reel _____, Frame _____, or for which a copy thereof is attached.

B. ☐ A chain of title from the inventor(s), of the patent application/patent identified above, to the current assignee as follows:

1. From: _____ To: _____

The document was recorded in the United States Patent and Trademark Office at

Reel _____, Frame _____, or for which a copy thereof is attached.

2. From: _____ To: _____

The document was recorded in the United States Patent and Trademark Office at

Reel _____, Frame _____, or for which a copy thereof is attached.

This collection of information is required by 37 CFR 3.73(b). The information is required to obtain or retain a benefit by the public which is to file (and by the USPTO to process) an application. Confidentiality is governed by 35 U.S.C. 122 and 37 CFR 1.11 and 1.14. This collection is estimated to take 12 minutes to complete, including gathering, preparing, and submitting the completed application form to the USPTO. Time will vary depending upon the individual case. Any comments on the amount of time you require to complete this form and/or suggestions for reducing this burden, should be sent to the Chief Information Officer, U.S. Patent and Trademark Office, U.S. Department of Commerce, P.O. Box 1450, Alexandria, VA 22313-1450. DO NOT SEND FEES OR COMPLETED FORMS TO THIS ADDRESS. **SEND TO: Commissioner for Patents, P.O. Box 1450, Alexandria, VA 22313-1450.**

If you need assistance in completing the form, call 1-800-PTO-9199 and select option 2.

Under the Paperwork Reduction Act of 1995, no persons are required to respond to a collection of information unless it displays a valid OMB control number.

STATEMENT UNDER 37 CFR 3.73(c)

3. From: _____ To: _____

The document was recorded in the United States Patent and Trademark Office at

Reel _____, Frame _____, or for which a copy thereof is attached.

4. From: _____ To: _____

The document was recorded in the United States Patent and Trademark Office at

Reel _____, Frame _____, or for which a copy thereof is attached.

5. From: _____ To: _____

The document was recorded in the United States Patent and Trademark Office at

Reel _____, Frame _____, or for which a copy thereof is attached.

6. From: _____ To: _____

The document was recorded in the United States Patent and Trademark Office at

Reel _____, Frame _____, or for which a copy thereof is attached.

☐ Additional documents in the chain of title are listed on a supplemental sheet(s).

☑ As required by 37 CFR 3.73(c)(1)(i), the documentary evidence of the chain of title from the original owner to the assignee was, or concurrently is being, submitted for recordation pursuant to 37 CFR 3.11.

[NOTE: A separate copy (i.e., a true copy of the original assignment document(s)) must be submitted to Assignment Division in accordance with 37 CFR Part 3, to record the assignment in the records of the USPTO. See MPEP 302.08]

The undersigned (whose title is supplied below) is authorized to act on behalf of the assignee.

/Steven M. Hertzberg/	August 5, 2016
Signature	Date
Steven M. Hertzberg	41,834
Printed or Typed Name	Title or Registration Number

Privacy Act Statement

The **Privacy Act of 1974 (P.L. 93-579)** requires that you be given certain information in connection with your submission of the attached form related to a patent application or patent. Accordingly, pursuant to the requirements of the Act, please be advised that: (1) the general authority for the collection of this information is 35 U.S.C. 2(b)(2); (2) furnishing of the information solicited is voluntary; and (3) the principal purpose for which the information is used by the U.S. Patent and Trademark Office is to process and/or examine your submission related to a patent application or patent. If you do not furnish the requested information, the U.S. Patent and Trademark Office may not be able to process and/or examine your submission, which may result in termination of proceedings or abandonment of the application or expiration of the patent.

The information provided by you in this form will be subject to the following routine uses:

1. The information on this form will be treated confidentially to the extent allowed under the Freedom of Information Act (5 U.S.C. 552) and the Privacy Act (5 U.S.C 552a). Records from this system of records may be disclosed to the Department of Justice to determine whether disclosure of these records is required by the Freedom of Information Act.
2. A record from this system of records may be disclosed, as a routine use, in the course of presenting evidence to a court, magistrate, or administrative tribunal, including disclosures to opposing counsel in the course of settlement negotiations.
3. A record in this system of records may be disclosed, as a routine use, to a Member of Congress submitting a request involving an individual, to whom the record pertains, when the individual has requested assistance from the Member with respect to the subject matter of the record.
4. A record in this system of records may be disclosed, as a routine use, to a contractor of the Agency having need for the information in order to perform a contract. Recipients of information shall be required to comply with the requirements of the Privacy Act of 1974, as amended, pursuant to 5 U.S.C. 552a(m).
5. A record related to an International Application filed under the Patent Cooperation Treaty in this system of records may be disclosed, as a routine use, to the International Bureau of the World Intellectual Property Organization, pursuant to the Patent Cooperation Treaty.
6. A record in this system of records may be disclosed, as a routine use, to another federal agency for purposes of National Security review (35 U.S.C. 181) and for review pursuant to the Atomic Energy Act (42 U.S.C. 218(c)).
7. A record from this system of records may be disclosed, as a routine use, to the Administrator, General Services, or his/her designee, during an inspection of records conducted by GSA as part of that agency's responsibility to recommend improvements in records management practices and programs, under authority of 44 U.S.C. 2904 and 2906. Such disclosure shall be made in accordance with the GSA regulations governing inspection of records for this purpose, and any other relevant (*i.e.*, GSA or Commerce) directive. Such disclosure shall not be used to make determinations about individuals.
8. A record from this system of records may be disclosed, as a routine use, to the public after either publication of the application pursuant to 35 U.S.C. 122(b) or issuance of a patent pursuant to 35 U.S.C. 151. Further, a record may be disclosed, subject to the limitations of 37 CFR 1.14, as a routine use, to the public if the record was filed in an application which became abandoned or in which the proceedings were terminated and which application is referenced by either a published application, an application open to public inspection or an issued patent.
9. A record from this system of records may be disclosed, as a routine use, to a Federal, State, or local law enforcement agency, if the USPTO becomes aware of a violation or potential violation of law or regulation.

Electronic Acknowledgement Receipt

EFS ID:	26563861
Application Number:	15207065
International Application Number:	
Confirmation Number:	6686
Title of Invention:	POOL CLEANING SYSTEM AND METHOD TO AUTOMATICALLY CLEAN SURFACES OF A POOL USING IMAGES FROM A CAMERA
First Named Inventor/Applicant Name:	Kameshwar Durvasula
Customer Number:	38137
Filer:	Steven M. Hertzberg/Steven Ortiz
Filer Authorized By:	Steven M. Hertzberg
Attorney Docket Number:	214,790
Receipt Date:	05-AUG-2016
Filing Date:	11-JUL-2016
Time Stamp:	15:44:07
Application Type:	Utility under 35 USC 111(a)

Payment information:

Submitted with Payment	no

File Listing:

Document Number	Document Description	File Name	File Size(Bytes)/ Message Digest	Multi Part /.zip	Pages (if appl.)
1	Applicant Response to Pre-Exam Formalities Notice	214790_Response.pdf	14828 43b53f6dbf0e430b60099802395731faf48f23e5	no	1

Warnings:

Information:					
2	Oath or Declaration filed	214790_Declaration.pdf	170439 646559f4f0d07898e164ccfaf4af4337ede0be25	no	2
Warnings:					
Information:					
3	Power of Attorney	214790_POA.pdf	114930 919c371fbd8a3b5c3655ed1d88d54ad07eabbc84	no	1
Warnings:					
Information:					
4	Assignee showing of ownership per 37 CFR 3.73	214790_Stmt.pdf	118182 6c282238bacc1ffab2ae70857f6fe1291b389eaa	no	3
Warnings:					
Information:					
			Total Files Size (in bytes):	418379	

This Acknowledgement Receipt evidences receipt on the noted date by the USPTO of the indicated documents, characterized by the applicant, and including page counts, where applicable. It serves as evidence of receipt similar to a Post Card, as described in MPEP 503.

<u>New Applications Under 35 U.S.C. 111</u>
If a new application is being filed and the application includes the necessary components for a filing date (see 37 CFR 1.53(b)-(d) and MPEP 506), a Filing Receipt (37 CFR 1.54) will be issued in due course and the date shown on this Acknowledgement Receipt will establish the filing date of the application.

<u>National Stage of an International Application under 35 U.S.C. 371</u>
If a timely submission to enter the national stage of an international application is compliant with the conditions of 35 U.S.C. 371 and other applicable requirements a Form PCT/DO/EO/903 indicating acceptance of the application as a national stage submission under 35 U.S.C. 371 will be issued in addition to the Filing Receipt, in due course.

<u>New International Application Filed with the USPTO as a Receiving Office</u>
If a new international application is being filed and the international application includes the necessary components for an international filing date (see PCT Article 11 and MPEP 1810), a Notification of the International Application Number and of the International Filing Date (Form PCT/RO/105) will be issued in due course, subject to prescriptions concerning national security, and the date shown on this Acknowledgement Receipt will establish the international filing date of the application.

PTO/SB/08a (01-10)
Approved for use through 07/31/2012. OMB 0651-0031
U.S. Patent and Trademark Office; U.S. DEPARTMENT OF COMMERCE
Under the Paperwork Reduction Act of 1995, no persons are required to respond to a collection of information unless it contains a valid OMB control number.

INFORMATION DISCLOSURE STATEMENT BY APPLICANT

(Not for submission under 37 CFR 1.99)

Application Number	15207065
Filing Date	2016-07-11
First Named Inventor	Kameshwar DURVASULA
Art Unit	TBD
Examiner Name	TBD
Attorney Docket Number	214,790

U.S.PATENTS Remove

Examiner Initial*	Cite No	Patent Number	Kind Code[1]	Issue Date	Name of Patentee or Applicant of cited Document	Pages,Columns,Lines where Relevant Passages or Relevant Figures Appear
	1	5205174	A	1993-04-27	Silverman et al.	
	2	5435031	A	1995-07-25	Minami et al.	
	3	5507058	A	1996-04-16	Minami et al.	
	4	5613261	A	1997-03-25	Kawakami et al.	
	5	5886630	A	1999-03-23	Menoud	
	6	7123746	B2	2006-10-17	Meniere et al.	
	7	7362351	B2	2008-04-22	Meniere et al.	
	8	7398138	B2	2008-07-08	Emery et al.	

INFORMATION DISCLOSURE STATEMENT BY APPLICANT (Not for submission under 37 CFR 1.99)		
	Application Number	15207065
	Filing Date	2016-07-11
	First Named Inventor	Kameshwar DURVASULA
	Art Unit	TBD
	Examiner Name	TBD
	Attorney Docket Number	214,790

	9	7993600	B2	2011-08-09	Doyle et al.	
	10	8007653	B2	2011-08-30	Porat	
	11	8043070	B2	2011-10-25	Stiles, Jr. et al.	

If you wish to add additional U.S. Patent citation information please click the Add button. Add

U.S.PATENT APPLICATION PUBLICATIONS Remove

Examiner Initial*	Cite No	Publication Number	Kind Code[1]	Publication Date	Name of Patentee or Applicant of cited Document	Pages,Columns,Lines where Relevant Passages or Relevant Figures Appear
	1	20020097322	A1	2002-07-25	Monroe et al.	
	2	20040025268	A1	2004-02-12	Porat	
	3	20040040581	A1	2004-03-04	Bruwer	
	4	20070094817	A1	2007-05-03	Stoltz et al.	
	5	20100299016	A1	2010-11-25	Benzler et al.	
	6	20110091329	A1	2011-04-21	Stiles, Jr. et al.	

INFORMATION DISCLOSURE STATEMENT BY APPLICANT (Not for submission under 37 CFR 1.99)		
	Application Number	15207065
	Filing Date	2016-07-11
	First Named Inventor	Kameshwar DURVASULA
	Art Unit	TBD
	Examiner Name	TBD
	Attorney Docket Number	214,790

	7	20110301752	A1	2011-12-08	Finezilber	
	8	20130151061	A1	2013-06-13	Hong	
	9	20130269097	A1	2013-10-17	Alammari	
	10	20140009748	A1	2014-01-09	Leonessa et al.	

If you wish to add additional U.S. Published Application citation information please click the Add button. Add

FOREIGN PATENT DOCUMENTS Remove

Examiner Initial*	Cite No	Foreign Document Number[3]	Country Code[2] i	Kind Code[4]	Publication Date	Name of Patentee or Applicant of cited Document	Pages,Columns,Lines where Relevant Passages or Relevant Figures Appear	T[5]
	1	101139007	CN	A	2008-03-00			
	2	0687964	EP	A1	1995-12-00			
	3	0811432	EP	A2	1997-12-00			
	4	S6162905	JP	A	1986-03-00			
	5	2004019295	WO	A1	2004-03-00			

INFORMATION DISCLOSURE STATEMENT BY APPLICANT (Not for submission under 37 CFR 1.99)		
	Application Number	15207065
	Filing Date	2016-07-11
	First Named Inventor	Kameshwar DURVASULA
	Art Unit	TBD
	Examiner Name	TBD
	Attorney Docket Number	214,790

	6	2009031361	WO	A1	2009-12-00			
	7	2012023676	WO	A1	2012-02-00			
	8	WO-2012/023676	WO	A1	2012-02-00			

If you wish to add additional Foreign Patent Document citation information please click the Add button Add

NON-PATENT LITERATURE DOCUMENTS Remove

Examiner Initials*	Cite No	Include name of the author (in CAPITAL LETTERS), title of the article (when appropriate), title of the item (book, magazine, journal, serial, symposium, catalog, etc), date, pages(s), volume-issue number(s), publisher, city and/or country where published.	T[5]
	1	Spanish Patent No. P201331047 - State of Art Search Report from the ES Patent and Trademark Office; mailed Feb. 3, 2015; 1 page.	

If you wish to add additional non-patent literature document citation information please click the Add button Add

EXAMINER SIGNATURE

Examiner Signature		Date Considered	

*EXAMINER: Initial if reference considered, whether or not citation is in conformance with MPEP 609. Draw line through a citation if not in conformance and not considered. Include copy of this form with next communication to applicant.

[1] See Kind Codes of USPTO Patent Documents at www.USPTO.GOV or MPEP 901.04. [2] Enter office that issued the document, by the two-letter code (WIPO Standard ST.3). [3] For Japanese patent documents, the indication of the year of the reign of the Emperor must precede the serial number of the patent document. [4] Kind of document by the appropriate symbols as indicated on the document under WIPO Standard ST.16 if possible. [5] Applicant is to place a check mark here if English language translation is attached.

INFORMATION DISCLOSURE STATEMENT BY APPLICANT (Not for submission under 37 CFR 1.99)		
	Application Number	15207065
	Filing Date	2016-07-11
	First Named Inventor	Kameshwar DURVASULA
	Art Unit	TBD
	Examiner Name	TBD
	Attorney Docket Number	214,790

CERTIFICATION STATEMENT

Please see 37 CFR 1.97 and 1.98 to make the appropriate selection(s):

That each item of information contained in the information disclosure statement was first cited in any communication from a foreign patent office in a counterpart foreign application not more than three months prior to the filing of the information disclosure statement. See 37 CFR 1.97(e)(1).

OR

☐ That no item of information contained in the information disclosure statement was cited in a communication from a foreign patent office in a counterpart foreign application, and, to the knowledge of the person signing the certification after making reasonable inquiry, no item of information contained in the information disclosure statement was known to any individual designated in 37 CFR 1.56(c) more than three months prior to the filing of the information disclosure statement. See 37 CFR 1.97(e)(2).

☒ See attached certification statement.

The fee set forth in 37 CFR 1.17 (p) has been submitted herewith.

A certification statement is not submitted herewith.

SIGNATURE

A signature of the applicant or representative is required in accordance with CFR 1.33, 10.18. Please see CFR 1.4(d) for the form of the signature.

Signature	/Steven M. Hertzberg/	Date (YYYY-MM-DD)	2016-08-04
Name/Print	Steven M. Hertzberg, Esq.	Registration Number	41,834

This collection of information is required by 37 CFR 1.97 and 1.98. The information is required to obtain or retain a benefit by the public which is to file (and by the USPTO to process) an application. Confidentiality is governed by 35 U.S.C. 122 and 37 CFR 1.14. This collection is estimated to take 1 hour to complete, including gathering, preparing and submitting the completed application form to the USPTO. Time will vary depending upon the individual case. Any comments on the amount of time you require to complete this form and/or suggestions for reducing this burden, should be sent to the Chief Information Officer, U.S. Patent and Trademark Office, U.S. Department of Commerce, P.O. Box 1450, Alexandria, VA 22313-1450. DO NOT SEND FEES OR COMPLETED FORMS TO THIS ADDRESS. **SEND TO: Commissioner for Patents, P.O. Box 1450, Alexandria, VA 22313-1450.**

Privacy Act Statement

The Privacy Act of 1974 (P.L. 93-579) requires that you be given certain information in connection with your submission of the attached form related to a patent application or patent. Accordingly, pursuant to the requirements of the Act, please be advised that: (1) the general authority for the collection of this information is 35 U.S.C. 2(b)(2); (2) furnishing of the information solicited is voluntary; and (3) the principal purpose for which the information is used by the U.S. Patent and Trademark Office is to process and/or examine your submission related to a patent application or patent. If you do not furnish the requested information, the U.S. Patent and Trademark Office may not be able to process and/or examine your submission, which may result in termination of proceedings or abandonment of the application or expiration of the patent.

The information provided by you in this form will be subject to the following routine uses:

1. The information on this form will be treated confidentially to the extent allowed under the Freedom of Information Act (5 U.S.C. 552) and the Privacy Act (5 U.S.C. 552a). Records from this system of records may be disclosed to the Department of Justice to determine whether the Freedom of Information Act requires disclosure of these record s.

2. A record from this system of records may be disclosed, as a routine use, in the course of presenting evidence to a court, magistrate, or administrative tribunal, including disclosures to opposing counsel in the course of settlement negotiations.

3. A record in this system of records may be disclosed, as a routine use, to a Member of Congress submitting a request involving an individual, to whom the record pertains, when the individual has requested assistance from the Member with respect to the subject matter of the record.

4. A record in this system of records may be disclosed, as a routine use, to a contractor of the Agency having need for the information in order to perform a contract. Recipients of information shall be required to comply with the requirements of the Privacy Act of 1974, as amended, pursuant to 5 U.S.C. 552a(m).

5. A record related to an International Application filed under the Patent Cooperation Treaty in this system of records may be disclosed, as a routine use, to the International Bureau of the World Intellectual Property Organization, pursuant to the Patent Cooperation Treaty.

6. A record in this system of records may be disclosed, as a routine use, to another federal agency for purposes of National Security review (35 U.S.C. 181) and for review pursuant to the Atomic Energy Act (42 U.S.C. 218(c)).

7. A record from this system of records may be disclosed, as a routine use, to the Administrator, General Services, or his/her designee, during an inspection of records conducted by GSA as part of that agency's responsibility to recommend improvements in records management practices and programs, under authority of 44 U.S.C. 2904 and 2906. Such disclosure shall be made in accordance with the GSA regulations governing inspection of records for this purpose, and any other relevant (i.e., GSA or Commerce) directive. Such disclosure shall not be used to make determinations about individuals.

8. A record from this system of records may be disclosed, as a routine use, to the public after either publication of the application pursuant to 35 U.S.C. 122(b) or issuance of a patent pursuant to 35 U.S.C. 151. Further, a record may be disclosed, subject to the limitations of 37 CFR 1.14, as a routine use, to the public if the record was filed in an application which became abandoned or in which the proceedings were terminated and which application is referenced by either a published application, an application open to public inspections or an issued patent.

9. A record from this system of records may be disclosed, as a routine use, to a Federal, State, or local law enforcement agency, if the USPTO becomes aware of a violation or potential violation of law or regulation.

IN THE UNITED STATES PATENT AND TRADEMARK OFFICE

Applicant:	Kameshwar DURVASULA et al.	Examiner:	TBD
Serial No.:	15/207,065	Art Unit:	TBD
Filed:	July 11, 2016	Conf. No.:	6686
Title:	POOL CLEANING SYSTEM AND METHOD TO AUTOMATICALLY CLEAN SURFACES OF A POOL USING IMAGES FROM A CAMERA		

Date: August 4, 2016

INFORMATION DISCLOSURE STATEMENT

Commissioner for Patents
P. O. Box 1450
Alexandria, VA 22313-1450

Commissioner:

This Information Disclosure Statement (hereinafter sometimes referred to as "IDS") is submitted in accordance with 37 C.F.R. §§1.97, 1.98, and it is requested that the information set forth in this statement and in the listed documents be considered during the pendency of the above-identified application, and any other application relying on the filing date of the above-identified application or cross-referencing it as a related application.

1. This IDS should be considered, in accordance with 37 C.F.R. §1.97, as it is filed:

(check one of the boxes opposite A-E)

[ ] A. within three months of the filing date of the above-identified national application, or within three months of the date of entry of the national stage as set forth in 37 C.F.R. §1.491 in the above-identified international application.

[X] B. before the mailing date of a first office action on the merits.

[ ] C. before the mailing of a first Office Action after the filing of a request for continued examination (RCE) under §1.114.

[ ] D. after the times set forth in (A), (B) and (C) above, but before the mailing date of either a final action under 37 C.F.R. §1.113 or a notice of allowance under 37 C.F.R. §1.311, and the necessary statement pursuant to 37 C.F.R. §1.97(e) appears below (see box "i") or the necessary fee is enclosed (see box "ii" below).

(check one of the boxes opposite "i" or "ii" below)

WYBOTICS EX1037
Wybotics v. Zodiac
Page 090

[ ] i. (check the applicable statement)

[ ] I, the undersigned, hereby state that each item of information contained in this Information Disclosure Statement was cited in a communication from a foreign patent office in a counterpart foreign application not more than three months prior to the filing of this Information Disclosure Statement.

[ ] I, the undersigned, hereby state that no item of information in this Information Disclosure Statement was cited in a communication from a foreign patent office in a counterpart foreign application and, to my knowledge after making reasonable inquiry, was known to any individual designated in 37 C.F.R. §1.56(c) more than three months prior to the filing of this Information Disclosure Statement.

[ ] ii. The fee set forth in 37 C.F.R. §1.17(p), presently believed to be $180.00, is submitted with the electronic filing.

[ ] E. after the times set forth in (A), (B), (C) and (D) above, but before payment of the issue fee, since Applicant petitions for the consideration of this Information Disclosure Statement by a petition enclosed herewith pursuant to 37 C.F.R. §1.97(d)(2), a check for the petition fee set forth in 37 C.F.R. §1.17(i), presently believed to be $130.00, is enclosed, and the necessary statement pursuant to 37 C.F.R. §1.97(e) appears below:

(check the applicable statement)

[ ] I, the undersigned, hereby state that each item of information contained in this Information Disclosure Statement was cited in a communication from a foreign patent office in a counterpart foreign application not more than three months prior to the filing of this Information Disclosure Statement.

[ ] I, the undersigned, hereby state that no item of information contained in this Information Disclosure Statement was cited in a communication from a foreign patent office in a counterpart foreign application and, to my knowledge after making reasonable inquiry, no item of information contained in this Information Disclosure Statement was known to any individual designated in 37 C.F.R. §1.56(c) more than three months prior to the filing of this Information Disclosure Statement.

2. In accordance with 37 C.F.R. §1.98(a)(1), this IDS includes a list on form PTO/SB/08a of all patents, publications, or other information submitted for consideration by the Office, incorporated into this IDS as an attachment hereto. Pursuant to 37 C.F.R. §1.98(b): (i) each U.S. patent or published patent application listed is identified by patentee, patent number, and issue date; (ii) each foreign patent or published foreign patent application is identified by the country or patent office which issued the patent or published the application, an appropriate document number, and the publication date indicated on the patent or published application; and (iii) each publication is identified by author (if any), title, relevant pages of the publication, date, and place of publication.

(check the boxes opposite A and/or B and fill in blanks, if appropriate)

WYBOTICS EX1037
Wybotics v. Zodiac
Page 091

[ ] A. Document(s) _____ is (are) substantively cumulative to document(s) _____ _____, and, in accordance with 37 C.F.R. §1.98(c), only a copy of each of the latter document(s) is (are) attached.

[X] B. Certain documents were previously cited by or submitted to the Office in the following prior application(s), which are relied upon for an earlier filing date under 35 U.S.C. §120:

US 9,388,595 B2

These documents are identified by attaching hereto copies of the forms PTO-892 and/or PTO-1449 from the files of the prior application(s) and Applicant requests that they be considered and made of record in this application in accordance with 37 C.F.R. §1.98(d). Pursuant to 37 C.F.R. §1.98(d), copies of these documents need not be provided with this IDS.

(check paragraphs 3 and/or 4, if applicable)

[X] 3. The following document(s) are not in the English language:

Spanish Patent No. P201331047 – State of Art Search Report from the ES Patent and Trademark Office; mailed Feb. 3, 2015; 1 page.

In accordance with 37 C.F.R. §§1.98(a)(3),1.98(c), it is stated that:

(check the applicable statement(s))

[ ] English-language abstract of the following document(s) are included on the first page of the respective documents.

[X] English translation(s) of the following documents (or of the pertinent portions thereof) are enclosed (with explanation as follows) and, thus no concise explanation of their relevance is required, (see M.P.E.P., §609, p. 600-92):

CN 101139007 A dated March 2008
EP 0687964 A1 dated December 1995
EP 0811432 A2 dated December 1997
JP S6162905 A dated March 1986
WO 2004019295 A1 dated March 2004
WO 2009031361 A1 dated December 2009
WO 2012023676 A1 dated February 2012

[ ] English-language equivalent(s) of the document(s) listed below (or of the pertinent portions thereof) which is (are) in fact translation(s) of the document(s) is (are) listed in the accompanying PTO/SB/08a.

WYBOTICS EX1037
Wybotics v. Zodiac
Page 092

[ ] The attached English-language version of a Search Report and the International Preliminary Report on Patentability, by a foreign patent office in a counterpart foreign application _____ which cites each of the documents which are not in the English language and which indicates the degree of relevance found by the foreign office is submitted to satisfy the requirement for a concise explanation of the relevance of the document(s), (see M.P.E.P., §609, p. 600-93).

[ ] A concise explanation of the relevance of document(s) _____ is set forth as follows:

[X] This application is a continuation of U.S. Patent No. 9,388,595 B2. The listed U.S. and foreign patent documents were cited in said parent registration.

[ ] A concise explanation of the relevance of the following document(s) can be found on the respective page(s) of the specification:

[ ] A concise explanation of the relevance of document(s) _____ can be found on the attached sheet.

[ ] 4. Other information being provided for the Examiner's consideration follows:

[ ] Copies of the International Search Report mailed _____ by the European Patent Office, and the International Preliminary Examination Report, completed _____, by the European Patent Office, in counterpart foreign application no. _____ are submitted with this Information Disclosure Statement.

5. In accordance with 37 C.F.R. §§1.97(g), 1.97(h), the filing of this IDS shall not be construed as a representation that a search has been made or as an admission that information cited in this IDS is, or is considered to be, material to patentability as defined in 37 C.F.R. §1.56(b). Unless otherwise indicated, the date of publication indicated for an item is taken from the face of the item and Applicant reserves the right to prove that the date of publication is in fact different.

6. Please charge any deficiency or other fees or credit any refund or overpayment to Deposit Account No. 01-0035.

Respectfully submitted,

/Steven M. Hertzberg/
Steven M. Hertzberg
Attorney for Applicant
Registration No. 41,834

ABELMAN, FRAYNE & SCHWAB
666 Third Avenue, 10th Floor
New York, NY 10017-5621
Telephone: (212) 949-9022
Facsimile: (212) 949-9190
Direct Tel.: (212) 885-9358

WYBOTICS EX1037
Wybotics v. Zodiac
Page 093

Mechanical Translation from the original Chinese

Underwater cleaning robot
CN 101139007 B
Abstract

Publication number	CN101139007 B
Publication type	Grant
Application number	CN 200710119800
Publication date	Jun 15, 2011
Filing date	Jul 31, 2007
Priority date	Jul 31, 2007
Also published as	CN101139007A
Inventors	Fuyuan , pay Indian dream , Liu Wei , Liu Tong , Yang Yi , Wang Meiling
Applicant	Beijing Institute of Technology
Export Citation	BiBTeX , EndNote , RefMan

Citations Patent (4), Classifications (3), Legal-Events (3)

Links External: SiPO , Espacenet

The present invention discloses an underwater cleaning robot, the robot can work in remote and autonomous control of two operating modes, including drainage mechanism, clean and mobile platforms and control systems. By drainage means, cleaning and division of labor with the mobile platform and control system, enabling the robot under water, horizontal, vertical and inclined surfaces or cleaning work Autonomous remotely. The present invention has the weight of a small, high-capacity, a compact mechanical structure is reasonable, practical, stability, energy, economy and general characteristics of a good, a swimming pool that can be used underwater bottom and wall cleaning robot .

Claims (10)

An underwater cleaning robot, characterized in that: it is a drain means, cleaning and mobile platform and control system; wherein the drainage means comprises a drainage, water channel drive control box sealed with the housing inner wall forming the robot (24) , water filter and water inlet and backflow preventer 0¾; water filter is fixed to the water channel (M), with the robot housing body (1) and the inner wall of the drive control box seal water channel 04) is divided into two parts; including drainage the drain (10), the drain screw (11), drain bracket (12), drain holder (13), drainage propeller bracket (15) and the drain of the drive shaft (17); the drain port (10) is fixed to the mounting drain bracket (12), and the drain is connected through a bracket (12) and the drain of the drive shaft (17), the drive shaft may surround the outlet (17) is rotated;

drain screw (11) by a DC high-speed propeller drain (14) driven, propeller bracket fixed to the drain (15), drainage propeller bracket (1¾ also the drain of the drive shaft (17) is connected with the drain (10) surrounding the outlet synchronous drive shaft (17) is rotated; drain holder (13) and drive control box at the top of the seal is fixed, drain holder (1¾ also drain the drive shaft (17) connected to a drive shaft rotatable about a drain (17) of rotation; drain servo drive (16) connected to and drives the drain bracket (1¾ and drainage propeller bracket (15) around the outlet shaft (17) is rotated; inlet 06) and backflow preventer (25), located in the robot housing OO) bottom surface, ensure that the water flow passage 04) is not within back; cleaning robot with a mobile platform includes an outer housing (1), clean the drive wheel (3), timing gears (5) and the drive belt; the robot outer casing (1) comprises a robot on the cover (18), robot sidewall OO) and the robot main housing (19), said cleaning drive wheel (¾ includes four independently driven cylindrical hub, four cleaning wheels (3) a set of two, by a robot, and the side walls clean the drive wheel side stand robot main housing, clean driving wheel center bracket 02) is connected with the robot installed; two belt gears (5) and a drive belt (4) as a group, attached to the robot main housing (19) between the side panels and the side wall of the robot OO), wherein a gear belt (5) with a clean drive DC motor (7) is connected to another gear belt (¾ with a clean driving wheel C3) connection, two a gear belt (5) by a drive belt □ drives; control system includes a central processor, surveillance cameras, frame grabbers, inertial navigation device, the remote control signal interface, the motor drive control system box (8), cleaning wheels DC motor (7), servo drives outlet (16), drainage propeller speed DC motor (14), sealing the drive control box and a control and energy management systems; surveillance cameras (¾ connected to the central processor via the image acquisition card, inertia navigation device, a remote control signal interface is also connected to the central processor, input part of the central processor chip and image acquisition card, inertial navigation device and a remote control signal interface including the control system; the central processor via the motor drive DC motor drive wheels clean (7), servo drives outlet (16), drainage propeller speed DC motor (14), the control system will include a central processor box, frame grabbers, inertial navigation device, the remote control signal interface, the motor drive control system package, the drive control sealed boxes will include a control system box (8), clean the drive DC motor (7), servo drives outlet (16), drainage propeller speed DC motor (14) parts of control systems sealed package, waterproof properties; control and energy management system to achieve the robot control and energy management.

2. The underwater cleaning robot according to claim 1, characterized in that the drainage means can choose to install one or more drainage, when you choose to install multiple drainage, to keep the drainage outfall shaft (17) coaxial.

3. The underwater cleaning robot according to claim 2, wherein the backflow preventer 0¾ divided into two parts by a shaft frame fixed cover 06) at the top of the intake, can rotate about the axis, when the water robot to enter the water channel 04), the backflow preventer 05) in two parts due to the role of water, about an axis of rotation, inlet 06) to open; when the water stops, backflow preventer 0¾ restore the closed state to ensure the flow channel 04 water will not be back) inside.

4. underwater cleaning robot according to claim 1, characterized in that said control and energy management system includes a control signal float antenna (27), signal relay and cable manager (¾), signal and energy cable (33), a control signal floats connected to the signal relay antenna installation and antenna interface cable manager, receiving a control signal to control the

keyboard, via the signal relayed by the signal and energy transmission to the remote control signal interface cables underwater cleaning robot.
5. underwater cleaning robot according to claim 4, wherein said control and energy management system further includes a counterweight cable loop (34), signal and energy cables (3¾ including internal control signal lines, power lines , cable density less than the density of water, can be equipped with heavy ring assembly by cable (34) to change its density, to adjust the suspension in the water.
6. The underwater cleaning robot according to claim 4, wherein said control and energy management system further includes a cable guide pulley frame (32), when the robot work with cable, cable guide pulley frame (32) attached to the shore around the corner, including the fixed pulley, fixed pulley seat rotation axis, rotation and achieve their own fixed pulley fixed pulley means around a fixed pulley seat rotation axis.
7. The underwater cleaning robot according to claim 1, characterized in that said control and energy management system includes a control signal float antenna, 2T) and control signals float antenna cable (35), a control signal float antenna, 2T) by the control signal floats antenna cable (3¾ direct communication with the robot remote control signal interface.
8. The underwater cleaning robot according to claim 1, characterized in that the underwater cleaning robot modes include manual cleaning and self-cleaning; the manual mode, the control signal generated by the control keyboard manual operation, by m antenna control signal floats directly or indirectly controlled underwater cleaning robot; the autonomous mode, the control signal from the central processor according to the environmental information and perception of their own position and attitude information, combined with pre-set cleaning tasks autonomously plan path and action, driving the robot to perform layer, complete underwater cleaning tasks.
9. The underwater cleaning robot according to claim 1, characterized in that the drain (10) may surround the outlet of the drive shaft (17) rotates, thereby changing the direction of the drainage, the robot travels, clean, and the vertical steering adherent traveling produce different forces.
10. The underwater cleaning robot according to claim 1, characterized in that said underwater cleaning robot with power inputs both rechargeable battery case, the robot may be powered externally from the battery pack may be a short time for the robot powered by.
Description

Underwater cleaning robot

TECHNICAL FIELD

[0001] The present invention relates to a robot, in particular for cleaning the underwater environment, with autonomous mobile functions can be controlled by remote control or autonomous underwater for horizontal, vertical and inclined surfaces clean, who can replace the complete autonomous underwater cleaning working underwater cleaning robot.

Background technique

[0002] the sport of swimming history for thousands of years, with the increase accelerating pace of modern life and standards of living, swimming has become physical fitness, recreational important form of exercise. Pool hygiene situation is directly related to the swimmer's motion and motion effects, therefore, to keep the pool wall and water hygiene is essential. Pool cleaning

manner according to the form and size of the pool is changed, for now, whether it is manual cleaning, or automatic water circulation, in water or other energy use and the use of labor there is a huge waste or redundant, resulting in swimming-pool maintenance costs, but also directly increase the cost of swimmers swimming, therefore, a need for an autonomous underwater cleaning device to solve this problem.

SUMMARY

[0003] The object of the present invention to provide a method capable of flexible, economic energy, multiple modes of operation of underwater robots, in order to better complete underwater cleaning work.

[0004] The present invention is an underwater cleaning robot, including drainage mechanism, clean and mobile platforms and control systems.

Drainage means [0005] The present invention comprises a drainage, water channel drive control box and sealing robot shell wall formation, water filter and water inlet and backflow preventer. Including outfall drainage, drainage propeller, drain bracket, drain fixation, drainage outlet and a propeller shaft bracket. Drainage outfall mounting bracket to the drain, and a drive shaft connected by a drain bracket and the drain can be rotated around the drive shaft; drainage from the propeller speed DC motor, fixed propeller holder together with the drain, and the drain is also driving shaft, and drain synchronous rotation around the drive shaft; drain and drain holder bracket and drainage stent propeller shaft connected by a common drain, about its rotation, drain holder and top drive control box sealed fixed. Said flow channel includes a drive control box sealed outer wall and the inner wall of the housing space robot constituted. Said water filter is fixed to the water channel, and the inner wall of the housing and a drive control robot sealed box will flow channels are divided into two parts. Inlet and backflow preventer, situated in the bottom of the housing bottom surface of the robot, including intake and backflow preventer, backflow preventer is divided into two parts by a shaft holder fixed to the cover into the top of the ladder, it can be rotated about an axis. Drainage mechanism selectively install one or more drainage, when you choose to install multiple drainage, to keep the drainage drainage drainage shaft coaxially.

Cleaning and mobile platform according to the invention [0006] The robot includes a housing body, clean the drive wheels, gear and belt drive belt. Robot robot shell comprises the top cover, the side walls and robotics robot main housing, the use of the robot housing forming a polymer material. Clean the drive wheel includes four independently driven cylindrical hub, the hub according to the outer surface of the wheel supporting the cleaning of different materials, a group of four two drive wheels clean by cleaning robot and the robot side wall of the main housing of the drive wheels side stand, center bracket and connected to the robot installation. Timing belt drive with belt gear, two gears with a drive belt of a belt set, installed on the side panels between the robot and the robot main body side wall, wherein a timing belt and a drive gear connected to the DC motor, the other a timing belt drive wheel gear with a clean connection, both timing belt drive gear by a drive belt carried.

[0007] The control system of the present invention includes a central processor, surveillance cameras, frame grabbers, inertial navigation device, a remote control signal interface, power management module, motor drive control system box, clean the drive wheel motor, drain drivers servos, drainage propeller speed DC motor drive control sealed box and a control and energy management systems. Wherein the input section of the central processor chip and image acquisition card, inertial navigation device and a remote control signal interface including the control system; the central processor chip and the motor drive output constituting part of the control system. The motor and drive wheels clean DC control mechanism would be driven to perform clean-tier system; the motor drive and servo drive drain outlet constitute rotation execution layer; motor drive mechanism and drainage into the propeller speed DC propeller-driven executives. The surveillance camera mounted on the front panel of the robot two main housing, surveillance cameras and frame grabbers constitute a control system environment sensing layer. The inertial navigation element is mounted on the robot drive control box sealed to form their own attitude control system alignment layer. The control system will include a central processor box, frame grabbers, inertial navigation device, a remote control signal interface, power management module, the motor drive control system package, both power input and rechargeable battery box, powered by an external robot may also be the case for a short time by a battery-powered robot, the control system is fixed to the drive control box at the bottom of the sealed box. The power management module is used to monitor the robot and the steady flow circuit, over-current overload protection robot control system. The cleaning of the DC motor drive wheel, gear box fitted with the encoder, the front mounting flange fixed to the driving control box side walls and the robot main seal housing side wall, through the timing belt and timing belt gear, driving cleaner wheels . The outfall servo drive, install drain holder fixed to the driving drain bracket and the bracket around the drainage outlet propeller drive shaft. The drainage propeller speed DC motor, propeller bracket fixed to the drainage, drainage driven rotating propeller. The cleaning drive wheel motor, drainage propeller speed DC motor equipped with an encoder, can achieve the motor drive servo motor and its control. The sealing of the drive control box, comprising a seal housing cover and the main housing box, the box lid sealed box comprising a waterproof slide groove outlet; driving control box sealed at both ends by the side walls of the main housing robot fixed inside the main housing to the robot, the control system includes a control system section box cleaner DC motor drive wheel, driven steering drain, the drain of the propeller-speed DC motor sealed package, using a molding polymer material having waterproofing properties . The control and energy management system includes a control signal float antenna, antenna cable float control signal, signal relay and cable management, signal and energy cables, cable rack and cable guide pulley counterweight ring. Wherein said signal repeater and cable manager includes a signal repeaters, cable managers, by managing the bracket and the pond shore ground fixed, the control signal floats connected to the signal relay antenna installation and antenna connection cable manager the control signal reception control keypad, via the signal relay, remote control signal interface cable from the signal and energy transmission to the underwater cleaning robot; signal relay and cable manager with external AC power supply and AC to DC transformer means via a signal energy and power input connector cable underwater cleaning robot, the robot power supply; signal relay and cable manager by the underwater cleaning robot central processor via the motor drive control retractable cable retractable cable motor execution; signal relay and signal repeater cable manager implementation and control signals float antenna connection, and sends the data to the robot; signal relay and cable management within the cable manager includes a retractable cable

with encoder motors, the robot central processor control, retractable cable function. And energy in the signal cable includes a control signal line, the density of the power cord, the cable is less than the density of water, can be fitted with cable by heavy ring changes its density, to adjust the suspension in the water. Cable counterweight ring for high-density polymer materials, cables and closely linked together, the mounting position can be adjusted. Said control signal floats antenna includes a control signal antenna and floats carrier, its density is much lower than water, floats on water, and control keyboard wireless communications, can drift antenna cable directly to the robot remote control signal interface communication via the control signal float, can also be installed fixed to the signal relay and cable manager, and then via the signal cable and energy indirect communication with the robot. Signal repeater and cable manager can be an external display device for displaying underwater cleaning robot working conditions and related performance indicators. The cable guide pulley frame when the robot is working with cable, attached to the shore around the corner, including the fixed pulley, fixed pulley seat rotation axis, rotation and achieve their own fixed pulley fixed pulley means around a fixed pulley seat rotation axis.

[0008] The present invention proposes an underwater cleaning robot its working modes include manual cleaning and self-cleaning. The manual mode, the control signal generated by the control keyboard manually operated, directly or indirectly controlled by a control signal underwater cleaning robot float antenna. The autonomous mode, the control signal from the central processor based on the information layer and the environmental perception itself pose an alignment layer, combined with pre-set cleaning tasks autonomously route planning and action, driving the robot to perform layer, complete underwater cleaning task. Global Clean long, the use of the robot work with cable, cable management and use of signal repeater and signal cables and energy; a short time when a local cleaning robot uses a battery-powered boxes, not to use signals and relay the signal and cable manager energy cable, using a control signal and the control signal antenna floats floats antenna cables, working time is relatively short.

[0009] The present invention proposes an underwater cleaning robot to complete the task of cleaning process:

[0010] underwater cleaning robot control command issued by the central processor control robot operation. Drainage mechanism, drainage propeller speed DC motor driven propeller drainage according to the set rotation speed, the water flow passage robot is discharged in its motor drive control, the internal flow channel to form a high vacuum, the water from the bottom of the robot into the suction outlet flow passage through the water filters filter the water under the debris, the clean water is discharged. Meanwhile, drain the propeller speed DC motor drive by the motor speed and current monitoring can determine the density of the inner flow passage of dirt, when dirt reaches a certain density, issued dirt full alert. Drain driven by servo motor drive control, driving the drain outlet around the stent along the shaft outlet slide groove rotate, changing the direction of the drainage. Intake above backflow preventer is installed, and when the water flow into the inlet, due to the force of water, backflow preventer is opened when the water flow stops to enter, because the water backflow preventer force disappearance closed to prevent water passage efflux debris. Cleaning and mobile platforms, four independent wheels clean by the motor drive control can be achieved independent movement, wheel speed by using different combinations to achieve the robot forward, backward, turning and brushing cleaning tasks. When

the robot to perform cleaning tasks with cable underwater robot use inertial navigation element cleaning wheels using dead reckoning, to give the robot the location information, according to the actual needs of the length of the retractable signal turn is controlled by the central processor and retractable cable Motor energy cables. According to the depth of the pool and the actual needs, select the appropriate location to install the cable counterweight ring, adjust the cable in water suspension. Signal repeater and cable manager from the cable guide pulley frame for the retractable cable guide. When the robot to perform tasks underwater off cable, antenna control signal floats drift antenna cable with the robot via a control signal floating, receive remote control signals to control robot motion. Autonomous cleaning process, the cleanliness of the pool set image threshold, the robot use surveillance cameras pool bottom picture, by the cleanliness of the threshold value comparison and to determine the bottom of the pool, cleaning motion planning, complete cleaning tasks.

[0011] The present invention proposes an underwater cleaner who wherein the force due to the high negative pressure drainage and water bodies within the channel robot, the robot can adhere to the vertical wall swimming pool cleaning, Robot vertical adherent traveling action.

[0012] The present invention provides an underwater cleaning robot comprising Since drain outlet along the slide groove movement, the robot can travel, cleaning, and the vertical shift effect produced adherent traveling. A plurality of drain outfall coordination along the slide groove movement or location, change the direction of the drainage outlet on the motion of the robot have different forces. When the robot is floating in the water, you can adjust the direction of two drainage outlet and drainage efforts to adjust the robot posture in the water to help the robot the correct posture. Especially when the robot is in the process of climbing wall, pool stairs due to the influence of other factors, may the chassis from the top, so that four wheels cleaning robot fails, then adjust the drain position to rely on the robot driver, it Back to normal operation state.

[0013] the beneficial effects of the present invention are: low weight, large capacity, motor dexterity lightweight, has a compact mechanical structure is reasonable, intelligent, practical, stability, energy, economy and general characteristics of a good, and can help instead of doing complete autonomy underwater cleaning work.

BRIEF DESCRIPTION

[0014] Figure 1 - underwater cleaning robot overall schematic, wherein: l-robot body shell, 2 surveillance cameras, 3 clean the drive wheels, 4-drive belt, 5-gear belt;

[0015] Figure 2 - underwater cleaning robot drive control schematic sealed box, wherein: 6-drive control box sealed, 7 clean drive wheel motor, control system box 8-, 9- outlet slide grooves;

[0016] Figure 3 - underwater cleaning robot drainage schematic, wherein: 10-outlet, 11 drainage propeller, 12 drain holder, 13-outlet holder, 14 drainage propeller speed DC motor, 15 drainage propeller bracket, 16 servo drives outlet, 17-outlet shaft;

[0017] Figure 4 - underwater cleaning robot cleaner and mobile platforms schematic, wherein: 18- robot on the roof, 19- robot main body, 20-robot side walls, 21 clean driving wheel side bracket and the 22 clean drive wheel center bracket;

[0018] Figure 5 - a lateral cross-sectional view of underwater cleaning robot, including: water filter 23-, 24- water channel, 25-backflow preventer and the 26 intake;

[0019] Figure 6 - underwater cleaning robot control system diagram.

[0020] Figure 7 - underwater cleaning robot work with cable schematic, wherein: 27- float control signal antenna, signal relay 28- and cable manager, and the 29 cable manager, 30- manager support, keyboard control 31- and the 32 cable guide pulley frame, 33- and energy signal cable, 34- cable counterweight ring.

[0021] Figure 8 - underwater cleaning robot off work cable schematic, wherein: 35- control signal float antenna cable. detailed description

[0022] below in conjunction with the accompanying drawings and the embodiment of the present invention will be further described.

[0023] Example

[0024] underwater cleaning robot of the present invention comprises a drainage means, cleaning and mobile platforms and control systems. Figures 1, 2, 3, 4, 5, 6, 7, and as shown in the drain means comprises a drain 8, the drive control box and seal the inner wall of the housing flow passage formed robot right, water filter 23 and inlet and backflow preventer 25. 10 includes a drain outlet, drain the propeller 11, outlet frame 12, outlet holder 13, the bracket 15 and the drain outlet propeller drive shaft 17. Underwater cleaning robot you can install multiple independent drainage, drainage of coordination of movement. Drainage outlet 10 connected to the drive shaft 17 through the bracket 12 and the drain outlet, around the drive shaft can be rotated; drainage propeller 11 by the high speed DC motor, the drain with fixed propeller bracket 15, also connected to the drain of the drive shaft 17, synchronized with the drain port 10 is rotated around the drive shaft; drain holder 13 and the drive control box fixed to the top seal. Water channel M includes a drive control box sealed outer wall and an inner wall of the outer casing of the robot spatial composition. Water filter 23 is fixed to the water channel M, and the inner wall of the robot body 1 and a drive control box will seal water channel M into two parts. Inlet 26 and backflow preventer 25, 19 located in the bottom surface of the robot main body, backflow preventer is divided into two parts by a shaft frame fixed cover above the inlet 26 may be rotated about an axis. When water enters the flow channel M robot, the two parts of the backflow prevention device 25 due to the action of water, about an axis of rotation, inlet Shen open; when the water stops, backflow preventer 25 to restore the closed state, to ensure that the water within the channel M the water will not be back. Drainage mechanism selectively install one or more drainage, when you choose to install multiple drainage, to keep the drainage outfall drainage shaft 17 coaxially. The drainage means to clean the mobile platform as the carrier, coordinated motion and clean with a mobile platform. Cleaning and mobile platform comprises a robot body 1, clean the drive wheels 3, timing belt drive gear 5 and 4. Characterized in that said robot

comprises a robot body housing cover 18, side walls 20 and a polymer material robot robot main body 19, the housing of the robot using a molding. Clean the drive wheel 3 includes four independently driven cylindrical hub, the hub according to the outer surface of the wheel supporting the cleaning of different materials, cleaning four wheels 3 a group of two, by a robot and robot main housing sidewall clean the body side bracket 21 of the drive wheels, the drive wheels clean and central support 22 connected to the robot installation. The timing belt 5 and the driving gear belt 4, two belt driving gear 5 and a belt 4 as a group, attached to the main housing 19 between the robot and the robot side panel sidewall 20, wherein a timing belt 5 with a gear drive DC motor 7 is connected to the other belt gear 5 with a clean driving wheel 3 is connected to the two timing belt drive gear 5 by the belt 4 drive. The control system includes a central processor, surveillance cameras, frame grabbers, inertial navigation device, the remote control signal interface, the motor drive control system box 8, clean the drive wheels 7 DC motors, servo drives drain 16, drain propeller speed DC motor 14 The drive control sealed box and a control and energy management systems. Enter the portion of the central processor chip and image acquisition card, inertial navigation device and a remote control signal interface including the control system; the central processor chip and the motor drive output constituting part of the control system. Motor drive DC motor and clean the drive wheels 7 constitutes a clean driving control system execution layer; motor drive and servo drive 16 constituting the drain outlet 10 is rotated execution layer; motor drive and drainage propeller speed DC motor 14 constitute 11 propeller-driven execution layer. The surveillance camera mounted on the robot main body 2 two front panel 19, surveillance cameras and frame grabbers 2 constitute a control system environment sensing layer. The inertial navigation system components mounted on the robot control box 8 constitute a control system itself posture alignment layer. Control system box 8 includes a central processor, frame grabber, inertial navigation device, a remote control signal interface, power management module, the motor drive control system package, both power input and rechargeable battery box, powered by an external robot also can in a short time from the battery pack to power the robot control system is fixed to the drive control box at the bottom of the sealed box. The power management module is used to monitor the robot and the steady flow circuit, over-current overload protection robot control system. The cleaning of the DC motor drive wheel 7, gear box fitted with the encoder, the front mounting flange 19 is fixed to the drive control box side wall and side wall sealing robot main housing, the drive wheels 3 clean. Drain servo drive 16, fixed to the drain port fixing bracket 12, 10 and drive drain outlet drain holder 12 around the drive shaft 17 is rotated. High-speed propeller drainage DC motor 14, mounting bracket 15 in the drain of the propeller, the propeller 11 is rotated driving the drain. Clean the drive wheel DC motor 7, drainage propeller speed DC motor 14 is equipped with an encoder, it can achieve its motor drive servo motor control. Drive control box sealed, including sealing lid and a main box box box, sealed box lid box comprising a waterproof functional outlet slide groove 9; drive control box sealed by both ends of the side walls of the main housing 19 mounted robot polymer material is fixed to the robot inside the main housing 19, will include a control system box 8, clean the drive wheels 7 DC motors, servo drives outlet 16, part of the drainage system control propeller speed DC motor 14 of sealed package using a molding with waterproof properties. Control and energy management system includes a control signal antenna 27 floats, floats antenna control signal cable 35, and the signal relay cable manager concept, and energy signal cable 33, cable 32 and cable guide pulley frame counterweight ring 34. Signal repeater and cable manager outlook includes a signal repeaters, cable managers Fourth, by managing the bracket 30 and the fixed ground pond shore, float control signal 27 is connected to

the antenna mounting signal repeater and antenna interface cable manager outlook, receiving a control signal for controlling the keyboard 31, via the signal relayed by the signal cable 33, and energy is transferred to the underwater cleaning robot remote control signal interface; signal relay and cable manager 28 is equipped with an external AC power supply and AC to DC transformer means power and energy input connector signal cable 33 through underwater cleaning robot, the robot power supply; signal relay and cable manager View underwater cleaning robot by the central processor via the motor drive control retractable cable retractable cable motor execution ; signal relay and cable manager Concept Implementation and control signal repeater signal floats antenna connection, and sends the data to the robot; signal relay and cable manager View IV to the cable manager includes a retractable cable with encoder motor, central processor by the robot control, retractable cable function. And energy in the signal cable 33 includes a control signal line, the density of the power cord, the cable is less than the density of water, can be fitted with cable weight by ring 34 changes its density, to adjust the suspension in the water. Cable counterweight ring 34 is a high-density polymer materials, cables and closely linked together, the mounting position can be adjusted. Control signal float antenna 27 includes a control signal antenna and floats carrier, its density is much lower than water, floats on water, and control of the keyboard 31 wireless communications, can drift antenna cable 35 directly to the robot remote control signal interface communication via the control signal float, can also be installed fixed to the signal relay and cable manager 28, through the signal cable 33, and energy indirect communication with the robot. Signal repeater and cable manager View external display device can display the working status of underwater cleaning robot and related performance indicators. Cable guide pulley frame 32 when the robot work with the cable shaft rotatably mounted on the shore around the corner, including the fixed pulley, fixed pulley seat rotation axis, rotation and achieve their own fixed pulley fixed pulley means to rotate around a fixed pulley seat.

[0025] The present invention proposes an underwater cleaning robot its working modes include manual cleaning and self-cleaning. The manual mode, the control signal generated by the control keyboard manually operated, directly or indirectly controlled by a control signal underwater cleaning robot float antenna. The autonomous mode, the control signal from the central processor based on the information layer and the environmental perception itself pose an alignment layer, combined with pre-set cleaning tasks autonomously route planning and action, driving the robot to perform layer, complete underwater cleaning task. Global Clean long, the use of the robot work with a cable, use a signal repeater and the signal cable manager View and energy cable 33; short-term local cleaning robot using the battery-powered box, do not use signal repeater and cable manager View and energy cables and signal 33, using a control signal antenna 27 floats and float control signal antenna cable 35, a relatively short time.

[0026] The present invention proposes an underwater cleaning robot to complete the task of cleaning process: underwater cleaning robot control command issued by the central processor to control the robot movements. Drainage mechanism, drainage propeller speed DC motor 14 driven by the motor drive in its controlled drainage in accordance with the set speed of rotation of the propeller 11, the water flow passage M robot is discharged, so that the internal flow channel to form a high vacuum, the bottom of the robot water from the water inlet suction channel pair, through the water filter 23 filters the water under the debris, the clean water is discharged.Meanwhile, drain the propeller speed DC motor drive by the motor speed and current

monitoring can be judged within the flow channel M soil density, when the soil reaches a certain density, issued dirt full alert. Drain 16 by driving the servo motor drive control, driving the drain outlet bracket 12 about the drive shaft 17 along the outlet slide groove 9 rotate, changing the direction of the drainage. Intake Shen installed above backflow preventer 25, and when the water intake comes in, because the force of the water, backflow preventer 25 is opened, when the water flow stops entering backflow preventer 25 due to the force of the water disappears and closed, It can prevent the outflow of water in the channel M debris. Cleaning and mobile platforms, four independent wheels clean 3 by motor drive control can be achieved independent movement, wheel speed by using different combinations to achieve the robot forward, backward, turning and brushing cleaning tasks. When the robot to perform cleaning tasks with cable underwater robot use inertial navigation device and clean the drive wheels 3 dead reckoning, to give the robot the location information, according to the actual needs of the length of the retractable signal turn is controlled by the central processor retractable cable Motor and energy cable 33. According to the depth of the pool and the actual needs, select the appropriate location to install the cable counterweight ring 34 to adjust the cable in water suspension. Signal repeater and cable manager View from the cable guide pulley frame 32 is a retractable cable guide. When the robot off the underwater cable in the implementation of tasks, control signal antenna 27 floats drift antenna cable 35 is connected by a control signal and a floating robot, receive remote control signals to control robot motion. Autonomous cleaning process, set the pool cleanliness image thresholding, the use of surveillance cameras 2 robot shooting pool bottom image through cleanliness compared with a threshold to determine the bottom of the pool, cleaning motion planning, thereby regulating the four clean drive 3 wheel and drainage work state, to complete the cleaning tasks. Specific speed can be adjusted for each wheel 3, wheel speeds through different combinations to achieve different intensity of the cleaning action, eg, the front wheel rapidly clockwise rotation, the rear wheel rotates slowly counterclockwise, the front wheel along the underwater cleaning robot is clockwise rotation of the determined direction of travel, but this time the efforts to clean than the rear wheel is rotated clockwise to be much larger. At the same time, to adjust the position of the direction of the drain outlet 10 and the drain 11 of propeller speed, can change the intensity of the cleaning, the robot higher work efficiency. For cleaning vertical wall, and you can also use the same control strategy. The present invention provides an underwater cleaner who by the force of high negative pressure drainage and water channel M robot bodies within the robot allows the adhesion of the vertical wall swimming pool cleaning, robot can travel vertically adherent action. The present invention provides an underwater cleaning robot since the drain port 10 along the sliding groove 9 drain motion, the robot can travel, cleaning, and the vertical shift effect produced adherent traveling. A plurality of drain outlet 10 along the coordinate movement or positioning slide groove 9, changing the direction of the drain outlet 10, the movement of the robot to generate different forces. When the robot is floating in the water, you can adjust the intensity of two drainage directions and drainage outlet 10, regulating the robot posture in the water to help the robot the correct posture. Especially when the robot is in the process of climbing wall, pool stairs due to the influence of other factors, may the chassis from the top , so that the cleaning robot four wheels 3 fails, then adjust the drain position to rely on the robot driver, make it returns to normal operating state in the past. Underwater cleaning robot inertial navigation element itself mounted with four drive wheels clean encoder 3 by dead reckoning ensure underwater cleaning robot autonomous navigation operation. When finished cleaning tasks, open the top cover 18 and the robot water filter 23, and underwater cleaning robot for cleaning water channel M can.

[0027] The present invention is not limited to this instance, any use of the design of the design ideas, make some simple changes in design should be entered within the scope of the invention.

Patent Citations

Cited Patent	Filing date	Publication date	Applicant	Title
CN101003300A	Jan 19, 2007	Jul 25, 2007	Harbin Engineering University	Six degrees of freedom to change Underwater propeller rotation axis
GB2181040A				Title not available
JPH08318229A				Title not available
WO1984003869A1	Apr 5, 1984	Oct 11, 1984	John Cameron Robertson	Remotely-operable vehicles for use in the cleaning and inspection of marine contact surfaces

Classifications

International Classification B63C11/42 , E04H4/16
Cooperative Classification E04H4/1654
Legal Events

Date	Code	Event	Description
Mar 12, 2008	C06	Publication	
Jun 15, 2011	C14	Granted	
Sep 18, 2013	C17	Cessation of patent right	

EP 0887964

Patents English French

Find prior art Discuss this application

Inventory management system

EP 2084589 A1 (text from WO2008054202A1)

ABSTRACT

The location of objects in a building is recorded in the inventory management system. The objects are moved through the building with a vehicle. The vehicle transmits wireless messages indicating actions of the vehicle, such as loading or unloading of objects. A camera captures images of an area in which the vehicle moves. Positions of the vehicle are automatically detected from the captured images. The information about locations of objects is updated using the detected positions at time points indicated by the messages. In an embodiment the actions of the vehicle are signalled with light signals and picked up via the camera.

Publication number	EP2084589 A1
Publication type	Application
Application number	EP20070834649
PCT number	PCT/NL2007/050519
Publication date	Aug 5, 2009
Filing date	Oct 30, 2007
Priority date	Oct 31, 2006
Also published as	EP1918797A1, US20100061595, WO2008054202A1
Inventors	Jan Baan, Ronald Zeelen
Applicant	Nederlandse Centrale Organisatie Voor Toegepast Natuurwetenschappelijk Onderzoek TNO
Export Citation	BibTeX, EndNote, RefMan

Non-Patent Citations (1), Classifications (4), Legal Events (5)

External Links: Espacenet, EP Register

DESCRIPTION (OCR text may contain errors)

Title: Inventory management system

The invention relates to an inventory management system using an image processing system.

In an inventory management system it is desirable to track movement of objects and to record their current location. Conventionally this is done by human controlled recording of object locations, sometimes with the assistance of a machine, such as a bar code scanner to identify objects that are placed at a location.

US 2005192702 discloses management of a container terminal. A loading vehicle transports a container to a loading point, from which it is transported by a stacking crane. Camera's are used to recognize the loading vehicle (or the container). Also the position of the container is measured, in order to control connections to the container.

EP 0887964 discloses a vehicle steering system that uses a camera and image processing to determine the position of a vehicle. The vehicle carries a light source. The image position of light from the light source is used to determine the location of the vehicle.

Neither of these documents allows for inventory management when objects are loaded or unloaded at arbitrary locations on a shop floor. More generally, the image processing systems disclosed in these publications are not useful for gathering arbitrary control information about objects.

Among others it is an object to provide for a method and system for inventory management that wherein loading and/or unloading of objects at arbitrary locations can be automatically managed.

Among others it is an alternative object to provide for an image processing system and method that provides for exchange of control information about objects. An inventory management system according to claim 1 is provided for. Herein a vehicle moves objects and transmits messages indicating actions of the vehicle. A computing system detects positions of the vehicle from images captured by a camera and updates information about locations of objects using the detected positions at time points indicated by the messages. Thus, image data is used to determine the locations of objects under the direction of messages from the vehicle, such as messages that the vehicle is loading or unloading the object. There is no need to rely on (or only on) a positioning system such as the GPS system to detect the positions of the vehicles. The camera may be mounted for example on a ceiling over an area including location for storing the objects. Even if the ceiling intercepts GPS signals detection of the position of vehicles is possible.

In an embodiment the computing system is configured to use the detected positions at time points indicated by the messages to identify objects in the inventory data for which the location will be updated in a storage device and/or location values to which the inventory data is updated. Thus, the system solves

CLAIMS (OCR text may contain errors)

Claims

1. An inventory management system, comprising

- a vehicle for moving objects, the vehicle comprising a control interface configured to generate messages indicating actions of the vehicle and a wireless transmitter coupled to the control interface for transmitting the messages;

- a camera directed at a floor on which the vehicle is able to move;

- a computing system coupled to the camera and configured to detect positions of the vehicle from images captured by the camera and to receive the messages from the wireless transmitter, the computing system being configured to update information about locations of objects using the detected positions at time points indicated by the messages.

2. An inventory management system according to claim 1, comprising

- a storage device for storing inventory data about the objects; and wherein

- the computing system is configured to use the detected positions at time points indicated by the messages to identify objects in the inventory data for which the location will be updated and/or location values to which the inventory data is updated.

3. An inventory management system according to claim 1 or 2, wherein the wireless transmitter comprises a light source located on the vehicle to be visible from the camera and configured to transmit the messages as temporally modulation patterns of transmitted light, the computing system being configured to receive the messages from images captured by the camera.

4. An inventory management system according to claim 3, wherein the computing system is configured to detect the position of the vehicle from a pixel location in the images from the camera where at least one of the modulation patterns is detected.

5. An inventory management system according to claim 4, wherein the computing system is configured to update information about at least one of the locations of objects in response to at least one of the modulation patterns, using a location determined from an image position where that at least one of the modulation patterns has been detected.

6. An inventory management system according to any one of the preceding claims, wherein the control interface of the vehicle is configured to include information identifying the vehicle in at least one of the messages and wherein the computing system is configured to associate the vehicle with an object and to update the location of the object associated with the vehicle

WYBOTICS EX1037
Wybotics v. Zodiac
Page 106

the technical problem of selection of inventory data records in the storage device that will be updated and/or automatic control of values that will be used in the updates, while avoiding use of a user input device or a GPS system for this purpose.

In an embodiment light modulated with a temporal modulation pattern is used to signal the messages and the computing system retrieves the messages from the images captured by the camera. Thus, no separate transmission system is needed for the messages.

Preferably the position of the vehicle is determined from visible aspects of the vehicle. In a further embodiment the position of the vehicle for updating the information about the location of an object is determined from an image position where the temporal modulation pattern is detected. Thus, there is no need to rely on (or only on) spatial image feature recognition to detect the a position of the vehicle. In an embodiment the update of the information about the location of an object in response to a message in a modulation pattern uses the image position where that modulation pattern is detected. Thus a minimum susceptibility for errors is realized. Alternatively, a position may be used where another modulation patterns from the vehicle is detected, for example if the pattern is received at a time point for which it is indicted that an object is unloaded at that time point.

The messages may contain information about the identity of the vehicle and/or the objects. Thus a more robust system can be realized.

These and other objects and advantageous aspects will become apparent from a description of exemplary embodiments, using the following figures.

Figure 1 schematically shows business premises;

Figure 2 shows an inventory management system;

Figure 3 shows vehicle system.

Figure 1 schematically shows business premises, comprising a hall with a ceiling 10 to which camera's 12 are attached. On the floor of the hall vehicles 14 are shown to transport objects 15 at various locations in the hall further objects 16 are stored. In addition the hall may contain machines (not shown) for manufacturing or processing the objects.

Camera's 12 are part of an inventory management system for the premises. Figure 2 shows such an inventory management system, comprising camera's 12, a computing system 20, a storage device 22 and a wireless signal receiver 24. In addition a part of an on-board system of a vehicle is shown, comprising an control interface 28 and a wireless signal transmitter 26. Computing system 20 is coupled to camera's 12, storage device 22 and signal receiver. Control interface 28 and signal transmitter 26 are coupled to each other and located on board a vehicle 14. Preferably, each vehicle in the hall has its own control interface 28 and signal transmitter 26.

In operation, vehicles 14 drive around the hall to move objects 15, 16 in and/or out of the hall and/or between different locations in the hall. The inventory management system is used to track the location of the objects 15, 16. Camera's 12 produce signals representing images of the floor of the hall, including vehicles 14. The signals are transmitted to computing system 20.

Computing system 20 processes the signals to determine the image position of vehicles 14 in the images. Methods of determining the position of vehicles, from signals representing images are known per se and will therefore not be described here. In an embodiment, vehicles 14 may be provided with marks or marking patterns at locations that are visible from the camera's to facilitate detection of the vehicles and measurement of their location in the images. As an alternative, if the objects are suitable for this, such markings may be provided on the objects and that the position of the vehicle may be determined from the object. However, this may require more complicated detection, because there may be many more objects than vehicles (not only at any one time but also in the course of time). For example it may be necessary to use the computing system to visually identify individual objects in camera images, which requires much more information than identifying a vehicle, or to determine whether a detected object is moving in order to establish that the object is associated with a vehicle.

that is identified in a message in response to said at least one of the messages.

7. An inventory management system according to any one of the preceding claims, wherein the camera is mounted on a ceiling over an area including location for storing the objects.

8. An inventory management system part, for maintaining information about locations of object that are moved by at least one vehicle that is configured to generate messages indicating actions pertaining to the objects, the inventory management system part comprising

- a camera,

- a computing system coupled to the camera and configured to detect positions of the vehicle from images captured by the camera and to receive the messages from the vehicle, the computing system being configured to update information about locations of objects using the detected positions at time points indicated by the messages.

9. An inventory management system part according to claim 8, wherein the computing system is configured to receive the messages from images captured by the camera.

10. An inventory management system part according to claim 9, wherein the computing system is configured to detect the position of the vehicle from a pixel location in the images from the camera where at least one of the modulation patterns is detected.

11. A vehicle comprising a control interface configured to generate messages indicating actions of the vehicle and a light source located on the vehicle to be visible from above, the control interface being configured cause the light source to transmit the messages indicating actions of the vehicle as temporally modulation patterns of transmitted light.

12. An inventory management method, comprising

- moving an object with a vehicle;

- transmitting wireless messages indicating actions of the vehicle from the vehicle,

- receiving the wireless messages in a computing system;

- capturing images of an area in which the vehicle moves,

- detecting positions of the vehicle from the captured images;

- updating information about locations of objects using the detected positions at time points indicated by the messages.

13. An inventory management method according to claim 12, wherein the step of transmitting comprises transmitting light modulated with a temporal modulation pattern in a direction of the camera and wherein the step of receiving comprises receiving the messages from the captured images.

14. An inventory management method according to claim 13, wherein the step of detecting positions comprises detecting the position of the vehicle from a pixel location in the captured images from the camera where the modulation pattern is detected.

15. A computer program product comprising a program of instructions which, when executed by a programmable computer, will cause the programmable computer to

- detect positions of a vehicle from images captured by a camera;

- receive messages from the vehicle, and - update information about locations of objects using the detected positions at time points indicated by the messages.

Although an embodiment with a plurality of camera's 12 has been shown, it should be appreciated that one camera 12 may suffice if this camera has a sufficient field of view to cover all locations where objects 15, 16 may be stored.

From the image position of vehicles 14 on the floor of the hall is determined, using information about the positions of camera's 12, their orientation and the fact that vehicles 14 are located on the floor (the vehicles vehicles could be measured

WYBOTICS EX1037
Wybotics v. Zodiac
Page 107

using GPS (Global Positioning System) receivers in the vehicles, but this system may not work within halls, for example when ceiling 10 comprises metal parts. Also GPS location measurement may not be sufficiently accurate. As another alternative a system of radio frequency beacon transmitters and receivers in the hall may be used, but this requires a more complex system than cameras 12.

When a vehicle 14 loads or unloads an object 15, 16 the operator of the vehicle 14 interacts with the control interface 28 of the vehicle to indicate loading or unloading. Control interface 28 is configured to receive such interactions and to cause wireless transmitter 26 to transmit a message reporting the interaction to wireless receiver 24, together with an identifier that identifies the vehicle 14.

Computing system 20 reads information about received messages from wireless receiver 24. Computing system 20 uses this information to update inventory data. The inventory data is stored in storage device 22. In an embodiment the inventory data comprises a set of records, each identifying a respective object 15, 16 and a current location of the object. A copy of the records or part thereof may be stored in computer system 20 itself.

A simple embodiment will be described first for the sake of illustration. When computing system 20 receives information from wireless receiver that an identified vehicle is loading an object, computer system 20 obtains the location of the identified vehicle 14 that was determined using camera's 12. In an embodiment the computer system 20 searches the records to identify an object stored at the location of the vehicle 14. Computer system 20 then records that this object has been loaded by the vehicle 14 and invalidates the location of the object in the record.

When computing system 20 receives information from wireless receiver that an identified vehicle is unloading an object, computer system 20 obtains the location of the identified vehicle 14 that was determined using camera's 12. Computer system 20 updates the record for the object that was last loaded onto the vehicle to this location and records that the object has been unloaded.

Preferably messages about loading and unloading are sent at the time of loading and unloading, thus indicating the time of loading or unloading. But it should be appreciated that alternatively such messages may be sent at a different time, as long as they indicate the time of loading or unloading. Such an indication is possible for example by means of a fixed relation between the time of transmission and the time of loading or unloading, or by transmitting information about the time of loading or unloading. When the messages about loading and unloading are sent at the time of loading and unloading, the measured position of the vehicle at the indicated time of loading and unloading may be used, to update the location of an object.

For this purpose the position of the vehicle may be monitored continuously using the camera and recorded, or the images from the camera may be recorded and the image for an indicated time may be used to detect the position of the vehicle at that time. When the indicated time is in the future, the corresponding future detected position may be used. As an alternative a potential time of unloading may be detected from a detection that the vehicle has not changed position during at least a predetermined duration of time, and a message about loading and unloading within a predetermined time-interval of such a detection may be taken to apply to the position that did not change in the predetermined duration of time. Alternatively the position at the indicated time of loading or unloading may be used.

It should be appreciated that several measures may be taken to increase the robustness of this method. In an embodiment, objects 15, 16 may be provided with identifying markers, such as bar codes or dot codes and vehicles 14 may be provided with readers for such markers coupled to wireless transmitter 26 for transmission of object identifying information based on the markers. In this case computer system does not need to search its records to identify the object.

In another embodiment unique marks or marking patterns may be provided on vehicles 14. In this embodiment computing system 20 uses these unique marks or marking patterns to identify individual vehicles in the images from camera's. As an alternative, or in addition, the vehicle identity may be maintained by tracking the image location of originally identified vehicles, however this is less robust.

Although in the simple embodiment it was assumed that objects 15, 16 are not stacked on the floor of the hall or in vehicles 14, it should be appreciated that stacking can easily be accounted for. As an example it may be recorded, e.g. in storage device 22, in which order the objects are stacked on the floor. In this case computing system can identify objects by assuming that a topmost object from a stack at a location is loaded when an object is loaded at the location of the stack. Similarly, when an object is unloaded at the location of a stack, it may be recorded that the object is unloaded to the top of that stack. A similar technique can be used for stacking on the vehicles, by recording an order of stacking on each vehicle 14.

As another example, a detector for automatically detecting and signalling loading or unloading of objects by a vehicles 14 may be used in a vehicle 14. As another example, camera's may be used to detect loading and unloading of objects by vehicles. As a further example a handshake protocol, involving transmissions back and forth between computing system and control interface 28 may be used to ensure more reliable message transmission; in this case the inventory management system preferably also comprises a wireless transmitter and an on-board vehicle system comprises a wireless receiver.

Figure 3 shows an on-board vehicle system with a light source 30 acting as wireless transmitter for signaling loading and unloading by means of a temporally modulated light intensity pattern. As an alternative a temporally changing wavelength distribution and/or polarization modulation may be used (camera's 12 being provided with spectral filters or polarizers to detect the modulation). Preferably the modulation pattern is realized by causing light source to emit light in a sequence of modulation states (with respective, different intensity, spectral distribution and/or polarization for example). The modulation pattern is intended to be received by camera's 12, and therefore changes between modulation states preferably occur at a rate equal to or less than the frame rate of the camera's (in an example less than or equal to 50Hz) and preferably at less than half the frame rate. Light source 30 may effectively be a point source, but alternatively a source with a predetermined spatial non-point shape may be used to aid in verification.

In an embodiment the modulation pattern comprises a synchronization pattern which may be the same for all vehicles 14, a

WYBOTICS EX1037
Wybotics v. Zodiac
Page 108

header part, which identifies the vehicle 14 transmitting the pattern, and a payload part that indicates the action taken by the vehicle 14 (loading or unloading) or other information. Optionally error correction or detection information may be modulated as well. Light source 30 is located on vehicle 14 so that light emitted by light source 30 is visible from above, where camera's 12 are located. In this embodiment camera's 12 act as wireless receivers.

Computing system 20 analyses sequences of the images to detect transmission of a modulation pattern from a location in the hall or along a track of locations corresponding to a moving vehicle. In an embodiment computing system 20 monitors modulation patterns in the pixel values for each pixel from camera's 12 until a pattern matching the synchronization pattern is detected for a pixel. Computing system 20 then reads the subsequent modulation pattern for the pixel and decodes the identification of the vehicle 14 and the action. In a further embodiment, wherein light source 30 is configured to emit light from a predetermined shape, computing system 20 may also test the shape of an image area in which the modulation pattern is detected to verify that a message is received and not an accidental light signal. It should be appreciated that such a modulation pattern also provides for the measurement of the image position of the vehicle 14, which follows from the position of the pixel at which the modulation pattern is detected, so that no further object recognition is needed to measure the position.

In a further embodiment computing system 20 is configured to detect modulation patterns from moving vehicles. In this embodiment computing system 20 monitors for the modulation pattern in the pixel values from groups of adjacent pixels. Preferably, when a modulation pattern is detected computing system 20 verifies that the modulation pattern is detected along a coherent track, temporally adjacent parts of the modulation pattern being detected at adjacent pixels.

It should be appreciated that other methods of signalling could be used. For example the synchronization pattern and/or the header could be omitted if the modulation pattern signalling the action is sufficient to detect messages and/or if the identity of the vehicle is determined in another way (e.g. by recognizing a visual marker on the vehicle from pixels in a region at a predetermined relative distance from the pixel at which the modulation pattern is detected). Preferably the modulation pattern comprises the synchronization pattern, the header and the payload part successively in time. Alternatively the sequence of the header and the payload may be exchanged. In another embodiment, when a shifting set of images is kept stored in computing system 20, the synchronization pattern may even be transmitted after the header and/or payload. In this case, when computing system 20 detects the synchronization pattern for a pixel it consults the pixel in stored preceding images to retrieve the payload and optionally the header.

Although an application to inventory management has been described it should be appreciated that signalling by means of a light modulation pattern from which the vehicle location is determined can be applied outside inventory management as well. This provides for a simple way of combined position detection and transfer of message information from an object such as a vehicle.

However, it should be appreciated that instead of a light source 30 and a camera 12 other means could be used to transmit information such as whether a vehicle is loading or unloading. For example, a radio frequency transmitter and receiver, infrared or ultrasonic transmitter and receiver could be used.

Although an embodiment has been shown where records are kept about the current locations of objects it should be appreciated that a historical record may be kept as well.

Computing system 20 may be implemented as a computer programmed with a program of instructions to process image signals from camera's 12 and to maintain information about the location of the objects. Storage device 22 may be a non-volatile storage device such as a hard disk, or a volatile memory such as a RAM. Alternatively, computer system 20 may comprises a plurality of processing devices, for performing different tasks of image processing and maintaining information. The processing devices may be programmable devices programmed to perform these tasks or hardware circuits hardwired to do so.

NON-PATENT CITATIONS

Reference	
*	See references of WO2008054202A1

* Cited by examiner

CLASSIFICATIONS

International Classification	G05D1/02
Cooperative Classification	G05D1/0246, G05D2201/0216
European Classification	G05D1/02E6V

LEGAL EVENTS

Date	Code	Event	Description
Aug 5, 2009	17P	Request for examination filed	Effective date: 20090512
Aug 5, 2009	AK	Designated contracting states:	Kind code of ref document: A1 Designated state(s): AT BE BG CH CY CZ DE DK EE ES FI FR GB GR HU IE IS IT LI LT LU LV MC MT NL PL PT RO SE SI SK TR
Feb 3, 2010	DAX	Request for extension of the european patent (to any country) deleted	
Jul 14, 2010	RAP1	Transfer of rights of an ep application	Owner name: NEDERLANDSE ORGANISATIE VOOR TOEGEPAST -NATUURWETE
Oct 21, 2015	18D	Deemed to be withdrawn	Effective date: 20150801

WYBOTICS EX1037
Wybotics v. Zodiac
Page 109

EP 0811432

Sign in

Patents Application Grant

Find prior art Discuss this application View PDF Download PDF

Device for cleaning of water tanks
EP 0811432 A2

Publication number	EP0811432 A2
Publication type	Application
Application number	EP19970850084
Publication date	Dec 10, 1997
Filing date	Jun 3, 1997
Priority date	Jun 4, 1996
Also published as	DE69720858D1, DE69720858T2, EP0811432A3, EP0811432B1
Inventors	Claes Mikael Grougge, Karl Jonas Pehrson
Applicant	Pehrson, Jonas
Export Citation	BibTeX, EndNote, RefMan

Patent Citations (6), Referenced by (4), Classifications (14), Legal Events (48)

External Links: Espacenet, EP Register

ABSTRACT

The present invention relates to a device preferably for cleaning of large water tanks. The device comprises a machine provided with crawler tracks and a framework (2) on which an electrical driving unit (3), a pump unit (4) whose inlet is connected to a vertically adjustable, cone-shaped nozzle (9) with a large suction width and whose outlet, via a hose (6) leads sucked up material to a container (7) or to a sewer outside the tank. The vehicle has two spot-lights (14, 15), a video camera (17), a sonar (21) and two ballast tanks (24, 25) mounted on the framework (2). The machine is manouvered on the bottom and the walls of the tank by an operator by means of information from video camera and sonar.

IMAGES (1)

DESCRIPTION

[0001] The present invention relates to a device comprising a machine, remotely controlled, for cleaning of inner surfaces preferably in drinking water tanks, comprising crawler tracks, brushes and a pump unit discharging sludge and particles via a hose into a sludge container outside the tank.

[0002] Existing devices of similar types have various disadvantages.

[0003] The apparatus according to US 5,093,943 has a programmed action pattern which provides that the surface to be cleaned is known and without obstacles. The sucked up material is filtered and delivered to a sludge collecting tank on a vehicle outside the water tank. The device also comprises another vehicle with a hydraulic power supply. If obstacles like columns, steps or the like are present, the device must be controlled manually to overpower the programmed pattern. The position of the device is determined by checking length and angle of tether line. There are no devices to facilitate navigation and checkout of the result of the cleaning.

[0004] The cleaning vehicle described in US 3,753,285 is provided with a number of mercury switches which are activated when the device strucks an obstacle and an external logic circuit controls the heading of the device in an uncontrolled way whereby parts of the bottom surface can be left uncleaned. One version does not have any logic but is operated manually. This vehicle is also without devices for remote control without visual contact from the operator. The sucked up water is filtered in an internal filter which gives the device a very poor cleaning capacity as the filter in a short time will be slowed by mud and particles. Consequently it is not suitable for large tanks with relatively thick layers of sludge and fine grained sediments. The device is provided with only one rotating brush.

[0005] The device according to US 4,304,022 is also operating with a filter arranged on the vehicle itself. The filter has to be emptied and cleaned as often as the filter get slowed at removing of fine grained sediment and particles.

[0006] Also this device lacks facilities for supervision and navigation of the vehicle when it is operating out of sight of an operator.

[0007] It can be stated that the three devices described above lack possibility for convenient and safe navigation i large, deep tanks with obstacles of various kinds and with relatively deep layers of sludge and particles on the bottom and the walls. The quality of the cleaning will then be jeopardized. Furthermore the two last mentioned devices lack possibility for external collection of sucked in material. The mud is instead collected in a filter on the vehicle itself and the filter has to be cleaned quite often. Consequently the cleaning work takes time and will be expensive.

[0008] The purpose with the present invention is to eliminate these disadvantages and to provide a vehicle which can unimpedely navigate between obstacles and in complicated tank shapes and even climb vertical walls. The device

CLAIMS (1)

1. A device comprising a machine (1), remotely controlled, for cleaning of inner surfaces preferably in drinking water tanks, comprising crawler tracks, brushes and a pump unit discharging sludge and particles via a hose into a sludge container outside the tank,

characterized by a framework (2) having a preferably electrically powered drive (3) and a centrally located pump unit (4) with an outlet (5) connected to a hose (6) which is lead to a tank (7) outside the water tank and the inlet (8) of which is connected to a downwardly directed, vertically adjustable suction nozzle (9) with a suction width equal to the distance between two crawler tracks (10) that via belts (11) are driving a front brush (12) and a rear brush (13) and by that on the upper side of the framework are mounted preferably two spotlights (14, 15), a video camera (17) remotely controlled from the control unit (16) and whose signal via a first signal line (18) in a cable is fed to a monitor (20) arranged in the control unit, a sonar unit (21) producing signals representing echoes from the surroundings to the control unit via a second signal line (22), the signals being visualized i a presentation unit (23) in the control unit and utilized by an operator to navigate the machine and direct the video camera and to activate blowing of two ballast tanks (24, 25) to manouver the vehicle vertically.

WYBOTICS EX1037
Wybotics v. Zodiac
Page 110

shall also deliver the sucked up sludge and particles directly into a sewer or a collection tank outside the water tank. Furthermore it shall be able to operate in drinking water tanks without whirling up the sludge and make the water muddy. The water distribution shall proceed without disturbances during the cleaning operation.

These advantages are achieved with a device according to the invention which is characterized by a framework having a preferably electrically powered drive and a centrally located pump unit with an outlet connected to a hose which is lead to a tank outside the water tank and the inlet of which is connected to a downwardly directed, vertically adjustable suction nozzle with a suction width equal to the distance between two crawler tracks that via belts are driving a front brush and a rear brush and by that on the upper side of the framework are mounted preferably two spotlights, a video camera remotely controlled from the control unit and whose signal via a first signal line in a cable is fed to a monitor arranged in the control unit, a sonar unit producing signals representing echoes from the surroundings to the control unit via a second signal line, the signals being visualized i a presentation unit in the control unit and utilized by an operator to navigate the machine and direct the video camera and to activate blowing of two ballast tanks to manouver the vehicle vertically.

The device will now be described more in detail with reference to the attached drawing on which

Fig 1 shows a schematic side view of the device in a water tank, a collection tank and a control unit outside the tank.

A machine 1 has a framework 2 on which a preferably electrical power unit is mounted. Centrally on the framework a pump unit 4 is mounted the outlet 5 of which, via a hose 6, leads the sucked sludge and particles to a container 7 located outside the water tank. The container can be placed on the ground or on a trailer. The sucked up material can also be lead to a sewer nearby.

On top of the framework 2 there are two spot-lights 14 and 15 and a videokamera 17. The camera 17 can be operated from a control unit 16 and the image is presented on a monitor 20. A sonar unit 21 is connected via a signal line 22 to the control unit 16 to show the operator echoes from the bottom and the surroundings on a presentation unit 23. By means of the information from the video image and the sonar echo the operator can control the vehicle with high precision even if there are obstacles present, for instance plumming or the like. To manouver vertically, for instance due to steps in the bottom surface or at launching or lifting up, two blowable ballast tanks 24 and 25 on the top of the framework can be filled or emptied.

The advantage with a device of the described type is that it is not necessary to engage divers and expose them to risks at work in complicated under-water structures. The device is easily operated by one single operator and the working time is drastically reduced compared to older methods or use of devices that cannot be operated by means of images from the bottom or wall profile or from obstacles consisting of columns, plumming etc. The whole cleaning operation can be followed and if necessy be recorded on diagrams and video tape. The big suction capacity prevents the water from becoming muddy and suction can thus be performed without interrupting the water supply.

The device is thoroughly tested by cleaning a drinking water tank with a volume of 10.000 m^3 and with a bottom area of 2300m^2 and with 185 supporting columns. The operation took two days and no interruption in the water supply was necessary.

The device has here been described in an application for water tanks but can of course be utilized for cleaning of tanks containing different, non inflammable liquids.

PATENT CITATIONS

Cited Patent	Filing date	Publication date	Applicant	Title
FR2416808A1 *				*Title not available*
US4304022 *	Dec 26, 1979	Dec 8, 1981	Schenk Ag	Underwater cleaning apparatus
US5093949 *	Jul 15, 1991	Mar 10, 1992	Sloan Albert H	Apparatus for cleaning liquid storage tank
US5205174 *	May 24, 1991	Apr 27, 1993	Silverman Eugene B	Scavenger submersible visual and acoustical tank inspection system and method
US5253812 *	Oct 16, 1992	Oct 19, 1993	Wesley Staples	Tank cleaning method and apparatus
US5363935 *	May 14, 1993	Nov 15, 1994	Carnegie Mellon University	Reconfigurable mobile vehicle with magnetic tracks

* Cited by examiner

REFERENCED BY

Citing Patent	Filing date	Publication date	Applicant	Title
EP2071932A1 *	Dec 10, 2008	Jun 24, 2009	Lely Patent N.V.	Device for watering an animal
US9388595	Jul 10, 2012	Jul 12, 2016	Aqua Products, Inc.	Pool cleaning system and method to automatically clean surfaces of a pool using images from a camera
WO2000017313A1 *	Sep 2, 1999	Mar 30, 2000	Hoch, Huppmann Gmbh	Brewery plant with a camera surveillance system
WO2016028069A1 *	Aug 19, 2015	Feb 25, 2016	Mueller Peter A	Storage housing for pool robot

* Cited by examiner

CLASSIFICATIONS

International Classification	B08B9/035, A01K61/00, E04H4/16, B08B3/08
Cooperative Classification	B08B9/0803, A01K61/003, E04H4/1654, B08B9/08, B08B9/0850
European Classification	B08B9/08, A01K61/00C, E04H4/16C, B08B3/08B, B08B9/08W

LEGAL EVENTS

Date	Code	Event	Description
Dec 10, 1997	AK	Designated contracting states:	Kind code of ref document: A2

Date	Code	Event	Description
			Designated state(s): BE DE FR GB NL
Nov 4, 1998	AK	Designated contracting states:	Kind code of ref document: A3 Designated state(s): AT BE CH DE DK ES FI FR GB GR IE IT LI LU MC NL PT SE
Jul 14, 1999	AKX	Payment of designation fees	Free format text: BE DE FR GB NL
Aug 18, 1999	17P	Request for examination filed	Effective date: 19980513
Apr 25, 2001	17Q	First examination report	Effective date: 20010309
Apr 16, 2003	AK	Designated contracting states:	Designated state(s): BE DE FR GB NL
Apr 16, 2003	REG	Reference to a national code	Ref country code: GB Ref legal event code: FG4D
May 22, 2003	REF	Corresponds to:	Ref document number: 69720858 Country of ref document: DE Date of ref document: 20030522 Kind code of ref document: P
Feb 20, 2004	REG	Reference to a national code	Ref country code: FR Ref legal event code: RM
Mar 19, 2004	REG	Reference to a national code	Ref country code: FR Ref legal event code: FD
Apr 7, 2004	26N	No opposition filed	Effective date: 20040119
Apr 16, 2004	EN	Fr: translation not filed	
Apr 30, 2004	ET	Fr: translation filed	
May 15, 2006	PGFP	Postgrant: annual fees paid to national office	Ref country code: FR Payment date: 20060516 Year of fee payment: 10
May 31, 2006	PGFP	Postgrant: annual fees paid to national office	Ref country code: GB Payment date: 20060531 Year of fee payment: 10
May 25, 2007	PGFP	Postgrant: annual fees paid to national office	Ref country code: DE Payment date: 20070525 Year of fee payment: 11
Jun 25, 2007	PGFP	Postgrant: annual fees paid to national office	Ref country code: BE Payment date: 20070625 Year of fee payment: 11
Jun 26, 2007	PGFP	Postgrant: annual fees paid to national office	Ref country code: NL Payment date: 20070626 Year of fee payment: 11
Nov 24, 2007	PGFP	Postgrant: annual fees paid to national office	Ref country code: GB Payment date: 20070530 Year of fee payment: 11
Apr 30, 2008	PGFP	Postgrant: annual fees paid to national office	Ref country code: FR Payment date: 20070626 Year of fee payment: 11
Sep 30, 2008	PGFP	Postgrant: annual fees paid to national office	Ref country code: BE Payment date: 20080623 Year of fee payment: 12
Oct 31, 2008	PGFP	Postgrant: annual fees paid to national office	Ref country code: NL Payment date: 20080624 Year of fee payment: 12 Ref country code: DE Payment date: 20080527 Year of fee payment: 12
Dec 31, 2008	PGFP	Postgrant: annual fees paid to national office	Ref country code: GB Payment date: 20080604 Year of fee payment: 12
Jul 31, 2009	PGFP	Postgrant: annual fees paid to national office	Ref country code: NL Payment date: 20090630 Year of fee payment: 13
Aug 31, 2009	PGFP	Postgrant: annual fees paid to national office	Ref country code: FR Payment date: 20090428 Year of fee payment: 13
Sep 30, 2009	PGFP	Postgrant: annual fees paid to national office	Ref country code: BE Payment date: 20090623 Year of fee payment: 13
Jul 30, 2010	PGFP	Postgrant: annual fees paid to national office	Ref country code: FR Payment date: 20100617

Date	Code	Event	Description
			Year of fee payment: 14
Oct 29, 2010	PGFP	Postgrant: annual fees paid to national office	Ref country code: NL Payment date: 20100630 Year of fee payment: 14 Ref country code: BE Payment date: 20100625 Year of fee payment: 14
Nov 30, 2010	PGFP	Postgrant: annual fees paid to national office	Ref country code: GB Payment date: 20100602 Year of fee payment: 14 Ref country code: DE Payment date: 20100604 Year of fee payment: 14
Aug 31, 2011	PGFP	Postgrant: annual fees paid to national office	Ref country code: GB Payment date: 20110601 Year of fee payment: 15
Sep 30, 2011	PGFP	Postgrant: annual fees paid to national office	Ref country code: BE Payment date: 20110621 Year of fee payment: 15
Dec 30, 2011	PGFP	Postgrant: annual fees paid to national office	Ref country code: NL Payment date: 20110705 Year of fee payment: 15
Mar 23, 2012	REG	Reference to a national code	Ref country code: FR Ref legal event code: ST Effective date: 20120229
Apr 19, 2012	REG	Reference to a national code	Ref country code: DE Ref legal event code: R119 Ref document number: 69720858 Country of ref document: DE Effective date: 20120103
Apr 30, 2012	PG25	Lapsed in a contracting state announced via postgrant inform. from nat. office to epo	Ref country code: DE Free format text: LAPSE BECAUSE OF NON-PAYMENT OF DUE FEES Effective date: 20120103 Ref country code: FR Free format text: LAPSE BECAUSE OF NON-PAYMENT OF DUE FEES Effective date: 20110630
May 31, 2012	PG25	Lapsed in a contracting state announced via postgrant inform. from nat. office to epo	Ref country code: DE Free format text: LAPSE BECAUSE OF NON-PAYMENT OF DUE FEES Effective date: 20120103
Jul 31, 2012	PGFP	Postgrant: annual fees paid to national office	Ref country code: NL Payment date: 20120626 Year of fee payment: 16
Aug 31, 2012	PGFP	Postgrant: annual fees paid to national office	Ref country code: GB Payment date: 20120530 Year of fee payment: 16
Oct 31, 2012	PGFP	Postgrant: annual fees paid to national office	Ref country code: BE Payment date: 20120625 Year of fee payment: 16
Jul 31, 2013	PGFP	Postgrant: annual fees paid to national office	Ref country code: GB Payment date: 20130529 Year of fee payment: 17
Dec 31, 2013	BERE	Be: lapsed	Owner name: *PEHRSON JONAS Effective date: 20130630
Jan 15, 2014	REG	Reference to a national code	Ref country code: NL Ref legal event code: V1 Effective date: 20140101
Mar 31, 2014	PG25	Lapsed in a contracting state announced via postgrant inform. from nat. office to epo	Ref country code: BE Free format text: LAPSE BECAUSE OF NON-PAYMENT OF DUE FEES Effective date: 20130630
Apr 30, 2014	PG25	Lapsed in a contracting state announced via postgrant inform. from nat. office to epo	Ref country code: NL Free format text: LAPSE BECAUSE OF NON-PAYMENT OF DUE FEES Effective date: 20140101

Date	Code	Event	Description
Jul 31, 2015	PGFP	Postgrant: annual fees paid to national office	Ref country code: GB Payment date: 20150603 Year of fee payment: 19

Google Home - Sitemap - USPTO Bulk Downloads - Privacy Policy - Terms of Service - About Google Patents - Send Feedback
Data provided by IFI CLAIMS Patent Services

WYBOTICS EX1037
Wybotics v. Zodiac
Page 114

Espacenet

Bibliographic data: JPS6162905 (A) — 1986-03-31

AUTOMATIC OPERATING METHOD OF UNMANNED VEHICLE

Inventor(s): CHIKAISHI YASUSHI ± (CHIKAISHI YASUSHI)

Applicant(s): KOMATSU MFG CO LTD ± (KOMATSU LTD)

Classification: - international: *G05D1/02;* (IPC1-7): G05D1/02
- cooperative: G05D1/0242; G05D1/0246; G05D2201/0202

Application number: JP19840184841 19840904

Priority number(s): JP19840184841 19840904

Abstract of JPS6162905 (A)

PURPOSE: To easily send commands for the setting, alteration, etc., of a run course by teaching the track of the run course captured by an image pickup means, and detecting the deviation of the mark of the unmanned vehicle from the track and sending a steering command by radio. CONSTITUTION: Video cameras 1A and 1B are arranged as image pickup means on the run path at an operation site and the run path is captured entirely by either video camera 1. An infrared light emitting device 3A is fitted to plural dump trucks 2A as unmanned vehicles which run on this run path and image signals from said video cameras 1 are transmitted to an office 4. Those image signals are image-processed at the office 4 and control commands such as a steering command are transmitted to the dump trucks 2 by radio. Consequently, each dump trucks 2A receives a command based upon the deviation of its mark from the previously taught target line from the office 4 to enter unmanned operation.

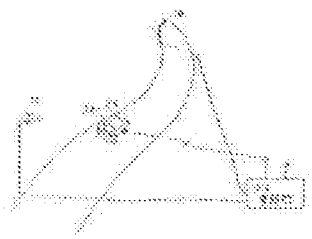

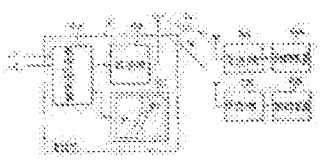

WYBOTICS EX1037
Wybotics v. Zodiac
Page 115

WO2004019295

Sign in

Patents English French

Find prior art Discuss this application

Pool cleaner with on-board water analysis, data recording and transmission device
WO 2004019295 A1

ABSTRACT

A self-propelled robotic pool cleaner (10) carries one or a plurality of sensors (20) for sensing and analyzing various water conditions in a pool or tank and periodically communicates the resulting information on the current value of each condition determined by a given sensor to a remote display device (44) for display and, optionally, to activate an audible (52) and/or visible (54) alarm to alert the person responsible for maintenance that one or more water conditions are outside of a pre-determined acceptable range. The display device (44) can be operated interactively to permit the user to enter information that establishes the acceptable range of water condition values.

Publication number	WO2004019295 A1
Publication type	Application
Application number	PCT/US2003/026352
Publication date	Mar 4, 2004
Filing date	Aug 22, 2003
Priority date	Aug 23, 2002
Also published as	DE60330361D1, EP1540612A1, EP1540612A4, EP1540612B1
Inventors	Joseph Porat
Applicant	Aqua Products Inc.
Export Citation	BibTeX, EndNote, RefMan

Patent Citations (3), Non-Patent Citations (1), Referenced by (16), Classifications (7), Legal Events (7)

External Links: Patentscope, Espacenet

DESCRIPTION

POOL CLEANER WITH ON BOARD WATER ANALYSIS, DATA RECORDING AND TRANSMISSION DEVICE

Field of the Invention

This invention relates to sensors and data recording and display devices used to analyze various characteristics of swimming pool water for the purpose of determining the need to add additional chemicals to change or to adjust, for example, the chlorine content and pH.

Background of the Invention

Various automated sensing and analysis devices have been developed to measure, record and display the level of free chlorine, oxidation reduction potential ("redox"), the pH value, hardness, total dissolved solids ("TDS") temperature and other characteristics and conditions of swimming pool water in order to simplify and facilitate the maintenance of the conditions within a desired or optimum range. These devices include a sensor capable of periodically sampling and measuring the pH and the free chlorine ion level of water. The results of the analysis are converted to digital form by circuitry known to the art and stored in the memory of a microprocessor. The stored data can be accessed for display to determine whether any maintenance action is required to restore the conditions of the water to the desired pH and chlorine content range. These devices can also be activated to obtain a display of conditions on demand. The display is via an LCD screen of the type commonly found on pagers and cellular telephones. The water is typically sampled by means installed in the piping associated with the water filter treatment apparatus. The purchase price, installation expense and maintenance costs associated with this prior art system can be substantial. Means for accessing a display or read-out must also be provided. Thus, the prior art requires that a complete, separate system and apparatus be installed and periodically checked at a location that may not be particularly convenient, such as a filter room or filter house located under the pool or in an even more remote location.

In addition to being inconvenient, the systems of the prior art require the owner to remain vigilant to weather conditions, such as outdoor temperatures, extent of sunshine and the like, which can have a marked effect on the frequency with which conditions of the pool water can change. Quite simply, the owner must remember to check the system in order to maintain the water in a safe and healthy condition.

For most residential pools, the home owner and/or his family members, a gardener or other employee with other principal duties will be responsible for pool maintenance. Since water conditions can fall outside of the desired or safe range without a visible manifestation, an improved system is required to alert the person responsible for monitoring pool maintenance that conditions should be checked and some remedial action be taken.

CLAIMS (36)

I CLAIM:

1. A self-propelled robotic pool cleaner for cleaning at least a submerged lower wall of a pool or tank containing water, said pool cleaner comprising: a cleaner housing; a sensor array including at least one sensor, said array being supported by said cleaner housing in a position at which each of said at least one sensor is in sensing relation to the water as said pool cleaner moves, each sensor of said array further sensing a specific condition of the water; a power source electronically connected to said sensor array to operate each of said at least one sensor; and means for outputting information to a remote display on each condition sensed by said at least one sensor on said array.

2. The pool cleaner of claim 1, wherein said sensor array is positioned in the interior of said cleaner housing in an active flow path of water through said pool cleaner.

3. The pool cleaner of claim 1, further comprising a protective housing including at least one water inlet mounted on an exterior surface of said cleaner housing, said sensor array being mounted within said protective housing such that water entering said protective housing through said at least one water inlet flows in contact with said at least one sensor in said sensing relation.

4. The pool cleaner of claim 1, wherein said means for outputting information includes a data cable extending from said cleaner housing for connection to the remote display.

5. The pool cleaner of claim 4, wherein said power source includes a power cable extending from said cleaner housing for connection to a remote source of electrical power, and said data cable comprises at least one conductor within said power cable.

6. The pool cleaner of claim 1, wherein said means for outputting information includes a wireless transmitter for transmitting the information as a wireless signal from said pool cleaner to the remote display.

7. The pool cleaner of claim 1, wherein said wireless transmitter includes an antenna having a free end adapted to float on an upper surface of the water in the pool.

8. The pool cleaner of claim 6, wherein said power supply includes a power cable extending from said cleaner housing for connection to a remote power source.

9. The pool cleaner of claim 1, wherein said power arrangement includes a battery within said cleaner housing for acting as a power source.

It is therefore an object of the present invention to provide sensing, analysis, recording, data processing and display apparatus that is integrated directly into a robotic pool cleaner assembly and one or more ancillary components, and which is readily accessible either on a component of the assembly or on the remote stationary or hand-held device dedicated to this purpose.

A further object of the invention is to provide an improved apparatus and method for monitoring and analyzing the condition of the water in a swimming pool or other tank or vessel by directly reading the conditions in the volume of liquid contained in the pool rather than liquid passing through a conduit or pipe and for providing a display of the relevant data reflecting such conditions at predetermined periodic intervals and/or on demand.

It is yet a further object of the invention to provide means and a method for displaying such data that will not require modifications of the filter or piping system used to treat and carry the water, to thereby minimize the expenses associated with obtaining and displaying such information.

It is yet another object of the invention to provide an automatic apparatus and method that will provide a signal alerting a change in conditions requiring maintenance or remedial action and to also provide customized instructions and data as to the maintenance or remedial action required, including, for example, the amount and type of one or more chemicals that must be added to restore the condition of the water to a predetermined desired level or range based upon the specific type of chemicals that have been used historically in the maintenance of the pool being monitored. Summary of the Invention

The above objects and other advantages are achieved by the invention in which a robotic pool cleaner used to clean the bottom wall of a pool or tank is provided with on-board sensor and analysis means for measuring one or more characteristics or conditions of the water in the pool, a programmed microprocessor for receiving data from the sensor and analysis means, data storage means associated with the microprocessor, data transmitting means and associated display means for displaying data derived from the sensor means.

As used herein, the term "sensor" means any one or more of commercially available devices that have the ability to sample water in which the device is immersed, analyze the content of the water for one or more parameters including, for example the level of free chlorine, oxidation reduction potential ("redox"), the pH value, hardness, total dissolved solids ("TDS") and temperature, and to store or transmit for storage the results of the analysis in digital form. Sensors suitable for use in the practice of the invention are available from commercial sources including the following : Omega USA of Stamford, CT , www.omega.com; Honeywell Sensing and Control of Freeport, IL, http/\content.honeywell. com/sensing/products/analytical, Signet Scientific Company, http://www.gfsignet.com; Hanna Instruments S.P.A. of Padova, Italy, http://www.hannainst.com; and ZD Instrument Co. of Jiangsu Province, China: http : //www . zdinstrument . com . When a remote power supply is used, the data is transmitted from the operating submerged pool cleaner via a separate data cable that is attached to the power cable or contained within the same insulating cover as the power conductors. The data transmission line(s) can be a shielded coaxial cable. The data line is then attached to the data display device. The connection can be permanent or via a jack when a separate data line is employed.

In one preferred embodiment, where the robotic pool cleaner receives its power from a remote power supply located outside of the pool, the data display means is associated with the power supply, either in a separate housing mounted on the exterior of the power supply or by incorporating the display means into the power supply housing. In a particularly preferred embodiment, the display means is interactive and includes a switch for activating the display screen and, in an especially preferred embodiment, a keypad or function keys that is operable by the user to advance the various characteristics and conditions that have been stored in the microprocessor's memory device and to selectively view the instructions for remedial action, such as chemical type and quantity that is to be added to restore the desired condition of the pool water.

In a second preferred embodiment, the pool cleaner is powered by an integral rechargeable battery and is provided with an antenna, the transmitting end of which floats on the surface of the pool water to transmit a signal to either or both of a stationary or a hand-held device. The transmission of data can be programmed for a periodic transmission or in response to signal from the receiver/display device that is passed through the floating antenna to the microprocessor which is activated to transmit stored data from the last test or series of tests. In a particularly preferred embodiment, the hand-held display

10. The pool cleaner of claim 1, further comprising a processor for processing data from said sensor array to generate the information to be output.

11. A self-propelled robotic pool cleaning system for cleaning at least a submerged lower wall of a pool or tank containing water, said pool cleaning system comprising: a pool cleaner comprising: a cleaner housing; a sensor array including at least one sensor, each of said at least one sensor being supported by said cleaner housing in a position in sensing relation to the water as said pool cleaner moves, each sensor of said at least one sensor sensing a specific condition of the water; a power source for supplying power to said sensor array to operate each said at least one sensor; and information output means for transmitting information on a condition sensed by each of said at least one sensor; and a remote display device in communication with said information output means.

12. The system of claim 11, wherein said sensor array is positioned in the interior of said cleaner housing in an active flow path of water.

13. The system of claim 11, said pool cleaner further comprising a protective housing including at least one water inlet mounted on an exterior surface of said cleaner housing, said sensor array being mounted in said protective housing such that water entering said protective housing through said at least one water inlet flows in sensing contact with said at least one sensor.

14. The system of claim 11, wherein said information output means includes a data cable operatively extending from said cleaner housing for connection to said remote display device.

15. The system of claim 14, wherein said power source includes a power cable extending from said cleaner housing for connection to a remote power source, and said data cable comprises at least one conductor in said power cable.

16. The system of claim 15, wherein the power source is positioned in a power supply housing and said remote display device is included in the power supply housing.

17. The system of claim 11, wherein said means for outputting information includes a wireless transmitter for communicating a signal from said pool cleaner to said remote display device.

18. The system of claim 17, wherein said wireless transmitter includes an antenna having a free end adapted to float on an upper surface of the water.

19. The system of claim 17, wherein said power source includes a rechargeable battery mounted in said cleaner housing.

20. The system of claim 11, wherein said power source includes a power cable extending from said cleaner housing for connection to a remote power source.

21. The system of claim 20, wherein the power source is positioned in a power supply housing and said remote display device is located at the power supply housing.

22. The system of claim 11, further comprising means for generating an audible and/or visible alarm signal in response to said sensor array detecting a predetermined unacceptable value for a water condition.

23. The system of claim 22, wherein said remote display device includes a display housing and said alarm generating means is on said display housing.

24. The system of claim 23, wherein said display device displays an acceptable range for the value of a water condition and a most recent value of the same water condition as determined by a sensor on the pool cleaner.

25. The system of claim 22, wherein said pool cleaner further comprises a processor for processing data from said sensor array to generate the information to be output.

26. The system of claim 11, wherein a predetermined one of said pool cleaner and said remote display device includes a processor for analyzing the information output from said sensor array, said

WYBOTICS EX1037
Wybotics v. Zodiac
Page 117

device can be configured similarly to a cell phone with a case, antenna, display screen, keypad and battery power supply. Alternatively, the hand-held device can be configured similar to a television remote control device. The sensor means can be positioned on the interior of the housing of the pool cleaner in an active flow path of water being drawn into the pool cleaner filter assembly. This location provides an accurate sampling of the actual conditions in the pool and also protects the sensors from damage. Alternatively, the sensors can be mounted on the exterior of the housing in a protective casing through which casing pool water to be sampled will flow. Sensor conductor leads pass through openings in the cleaner housing to the microprocessor memory unit.

The power requirements for the sensor, microprocessor and transmitter are obtained from the power supplied to the pool cleaner to operate the pump or pumps and any drive motor or motors. As noted above, this can be a remote power source located outside of the pool or a rechargeable battery that is also positioned inside the pool cleaner housing.

For a battery-powered pool cleaner, a separate antenna wire must be provided, with the free end floating at the surface of the pool water. The antenna is preferably attached via a plug and jack assembly passing through the pool cleaner housing that is attached to the microprocessor and transmitter circuit. In this way, the antenna can be removed and coiled for storage when the cleaner is removed from the pool for maintenance or storage. Alternatively, the antenna can be attached to a manually operated reel or drawn from an automatic coiling device located on the exterior or interior of the pool cleaner housing. As previously noted, the on-board sensor means can include means for analyzing any one or more of the water characteristics and conditions that are presently available or that may be developed in the future. A separate power source can be provided to the sensor unit(s) to permit their operation even when the pool cleaner is not operating to clean the pool. The separate power source can be a circuit supplied by the remote power supply or a separate rechargeable or dry cell battery. In this embodiment, the pool cleaner is left in the pool and will display or even signal a change in conditions requiring remedial action to restore the pool water.

In the case of either the remote power supply or the integral battery power supply, the apparatus can include a remote hand-held display device having the characteristics of a pager, or a more sophisticated device that has additional interactive functional capabilities than the pager that can be carried by the user to interrogate the stored data.

The programmed microprocessor can include the generation of an audible and/or visible warning signal to indicate that one or more of the measured conditions is outside of a predetermined acceptable range. For example, in heated swimming pools, the program for a temperature sensor can include an audible alarm to indicate when the water temperature has dropped below or exceeded a predetermined value. Such a condition might arise in the event of a failure of the pool's heating element and/or its associated temperature sensor and thermostatic control device. A rise in water temperature will also cause more chlorine to be released into the atmosphere and will accelerate the replacement requirement for the chemical. Prompt remedial action can save time and money in restoring the desired balance.

The most common maintenance requirement for swimming pools is the addition of a source of chlorine ions in order to inhibit the growth of bacteria, algae and the like. The effect of direct sunlight and an increase in temperature is well known to reduce the level of chlorine ion. Thus, in a preferred embodiment of the invention, a chlorine sensor is included and the microprocessor is programmed to provide a signal to indicate when the chlorine level drops below the desired predetermined level.

In an especially preferred embodiment, the microprocessor and memory device is programmed to permit the owner to identify the particular type and form of chlorine containing chemical that has historically been used in the treatment of the pool. For example, HTH is available in the form of a liquid additive, crystals and powder. A microprocessor is programmed to display a recommended amount of the particular type and form of chlorine ion chemical that must be added based upon the entry of data that includes the volume of water in the pool that must be treated. The program can also include other parameters, such as water temperature and sun load in identifying the volume and/or weight of chemical product to be added. In one particularly preferred embodiment, the microprocessor is programmed with information about all of the known chemical products commonly used in a particular geographical area where the pool cleaner is to be sold. The programmed information can include trademarks and brand names. Algorithms are provided to account for water temperature, sun loads, water hardness ranges, pH ranges and such other parameters are customarily measured.

The user is provided with one or more menus from which are selected the particular brand and/or type of chemical used to maintain the pool in which the pool cleaner of the invention is to be used. The volume of the water in the pool is also entered. Thereafter, during use, the display will include a screen with information as to how much of the previously specific

display device providing an alarm signal in response to said processor determining that at least one condition detected by said sensor array requires remedial action.

26. The system of claim 25, wherein said processor includes an algorithm employing a predetermined range of values corresponding to each of one or more water conditions to determine whether a corresponding sensed water condition requires remedial action.

27. The system of claim 26, wherein said display device is interactive to permit input of additional information to said processor, and wherein the algorithm further employs the additional information input to said processor to determine whether at least one condition requires remedial action.

28. The system of claim 11, wherein said display device is hand-held.

29. The system of claim 11, wherein said display device is stationary.

30. The system of claim 11, wherein said display device communicates a recommendation for remediating the at least one condition detected by said sensor array that requires remedial action.

31. A method of operating a pool cleaning system for cleaning at least a submerged lower wall of a pool or tank containing water, wherein the pool cleaning system comprises: a self-propelled robotic pool cleaner, comprising a cleaner housing, a sensor array including at least one sensor, the array being supported by the cleaner housing in sensing relation to the water and a power arrangement for supplying power to the sensor array to operate said at least one sensor, and a remote display device, said method comprising the steps of: sensing at least one condition of the water using a sensor of the array; outputting information to the remote display as to each of said at least one conditions sensed by said array; and displaying information relevant to the at least one condition of the water.

32. The method of claim 30, further comprising the step of generating an audible and/or visual alarm signal in response to said sensing step sensing a predetermined undesirable value for at least one of the water conditions.

33. The method of claim 30, wherein the display device includes a processor for analyzing the information from the pool cleaner, said method further comprising the step of providing an alarm signal in response to the processor determining that at least one condition sensed in said sensing step requires remedial action.

34. The method of claim 33, wherein said step of providing an alarm signal includes the step of communicating a recommended action for remediating the at least one condition that requires remedial action.

35. The method of claim 34, wherein said step of providing an alarm signal includes the step of applying an algorithm in the processor to employ the information to determine whether at least one condition requires remedial action.

36. The method of claim 35, wherein the display device is interactive and receives the input of additional information to the processor, and wherein said step of applying the algorithm further applies the additional information input to the processor to determine whether at least one condition requires remedial action.

WYBOTICS EX1037
Wybotics v. Zodiac
Page 118

chemical is to be added to restore water conditions within the desired or prescribed range.

As will be apparent to one of ordinary skill in the art, that data from the onboard sensors can also be transmitted to a stationary data display device, such as a personal computer, portable notebook or laptop computer for access by the user. For convenience, all such computers will be referred to as "stationary devices" to distinguish them from the hand-held devices described above. The stationary display device can be located in the user's home. The pool monitoring system can also be incorporated into an advanced household monitoring system of the type that are known to the prior art.

Any of the various types of transmitting methods and apparatus known to the art or developed in the future can be adopted. In the case of a remote power supply, the data display device can be hard-wired to one of more secondary display devices in the user's home. In the case of a battery-powered pool cleaner, one or more stationary receiving antennas can be positioned in the vicinity of the pool to pick-up the data signals from the microprocessor. If necessary or desired, the receiving antennas can be provided with booster to enhance the signal for retransmission. The data transmission and receiving system of the invention further comprehends the use of the Internet for providing access to the data from other remote locations, either accessible to the owner or to a commercial pool servicing organization. This type of system can also be used by institutions, such as universities, municipal parks departments and the like, to monitor the conditions of numerous pools under their jurisdiction for the purpose of dispatching an employee to correct conditions that are not within acceptable ranges. Use of the invention in such circumstances would permit maintenance personnel to take action promptly on an as- needed basis to enhance efficiency, reduce costs and maximize operations within predetermined safety limits for the benefit of swimmers and others using the pools.

Brief Description of the Drawings

The invention will be described in more detail below and with reference to the attached drawings in which: FIG. 1 is a schematic illustration of one preferred embodiment of a pool cleaner of the invention provided with an external sensor array in operation with a remote power supply equipped with a data display screen and interactive display switches;

FIG. 2 is an enlarged front, top, right side perspective view of the power supply of FIG. 1; FIG. 3 is a schematic illustration of the invention similar to /FIG. 1 showing the sensor array positioned on the interior of the pool cleaner housing and its relation to a remote hard-wired data display device and pager and to an alternative hand-held device that communicates interactively with the hard- wired device;

FIG. 4 is a schematic illustration of the invention in which the power is supplied by a battery that is integral with the pool cleaner; and

FIG. 5 is a schematic block diagram of an interactive communications system in accordance with another preferred embodiment which integrates a battery-powered pool cleaner with a plurality of local and remote interactive data display devices and antennas, and an Internet link.

Detailed Description of the Preferred Embodiments

In one preferred embodiment of the invention illustrated in Fig. 1, a pool cleaner generally referred to as 10, is provided with an external sensor array 20 comprising one or more sensors (or sensors/analyzers) 23 contained in a protective housing 21 provided with one or more water sampling inlets 22. Each sensor 23 is adapted to sense a respective condition of the water in the pool and is therefore physically disposed in or on the pool cleaner 10 so as to be in sensing relation to the water. In this embodiment, an external power supply 40 is connected to the pool cleaner 10 by power cable 50.

A preferred arrangement of the display and controls as integrated into the casing of the power supply housing 42 is illustrated in Fig. 2. Liquid crystal display 44 is prominently positioned for easy viewing on a front or top side surface of housing 42. A multi-conductor power supply cable outlet 50 is mounted through the housing 42 and includes terminals 51 for receiving information (data) transmitted from the one or more sensors 23 in the pool cleaner 10. The power supply 40 is also provided with an on/off power switch 46 and one or more, but preferably a plurality of, function and characteristic display switches in the form of pushbuttons 48. These function actuators 48 interact with the microprocessor (not illustrated) that is either located in the power supply housing 42 or more preferably, on-board the pool cleaner.

In one preferred method of practicing the invention, the one or more sensors 23 are periodically activated and the data generated processed to determine whether it is within the predetermined acceptable range. In the event that the data is outside the desired range, an audible alarm can be generated from signal unit 52 and/or a visible signal device such as flashing light 54 is activated. Either or both of these signal devices can be omitted or deactivated and the user can interrogate the device to obtain a on-demand display of the data for any one or more of the characteristics stored in the microprocessor's memory device. In a particularly preferred embodiment, the microprocessor is programmed to display the acceptable value or range along with the most recent actual analysis result.

The display also preferably prompts the user with information about the proactive or remedial action to be taken, such as "add chlorine." In this embodiment the microprocessor memory device is programmed with information concerning the specific type (i.e., liquid, crystal, powder) and strength or concentration and brand name of the chemicals historically used to treat the pool to maintain its balance. In this embodiment, the user can be prompted to display the required type and amount of chemical additive to be used, taking into account other variables such as the actual volume of the water contained in the pool, water temperature and the like. The programming of microprocessors with this information for use in an interactive manner is known to the art and/or can be extended in accordance with the teachings of the invention by one of ordinary skill.

In the alternative embodiment illustrated in Figure 3, showing the interior of a pool cleaner 30 that has been turned upside down for clarity, the sensor array 20 can be incorporated into the casing 25 positioned on the interior of the housing in the active flow path of the water that has been drawn through the filter bag 27. This particular configuration, with the sensors 23 located on the interior of the housing 12, is preferred in order to minimize the possibility of damage by mishandling the pool cleaner 30. This is also a preferred location for the sensor array 20 if the cleaner 30 is to be left in the pool when it is not

WYBOTICS EX1037
Wybotics v. Zodiac
Page 119

performing its cleaning operations. A further embodiment of the invention is illustrated in Fig. 4 where the pool cleaner power is supplied by an on-board rechargeable battery 31, which eliminates the need for an external power cable. In this embodiment, the data must be transmitted through an antenna 70, the transmitting end 72 of which floats on the surface of the pool water.

The antenna 70 can be terminated by a jack and mating plug assembly 74 to permit removal from the housing during storage. A signal transmitting cable 76 links the antenna 70 to the sensor array assembly.

In this embodiment, a remote display device, which can be a hand held display 120 (see Fig. 4), a PC or laptop computer 125 (see Fig. 5) with an appropriate receiving and transmitting antenna 205 of its own or a stationary receiver 100 configured similar to that of the power supply display module 40 described above, can be employed. The stationary receiving transmitter 100 may receive the signal from the floating antenna 70 and retransmit it via antenna 102 to the pager 110 or a more interactive hand-held remote control device 120 (see Fig. 5). Here a separate power cable 38 may be used.

The remote receiving antenna 205 can be installed on a mast 200 dedicated to that use, on a building 210 or home proximate the pool, or at any other convenient location that is within range of the floating antenna. In the embodiment depicted in Fig. 5, the stationary receiving transmitter 100 receives the signal from the floating antenna 70 and retransmits it via antenna 102 to pager 110 or the more interactive hand-held remote control device 120. The transmitter/receiver 100 can also be provided with a modem 130 allowing direct access and communication of data via telephone lines 140 or satellite through the internet to either type of device 110 or 120.

Transmitter receiver 100 can also be integrated into commercially available electronic home monitoring and control systems. The receiver 100 can be hard- wired or connected via antenna 210 and a separate receiver transmitter unit. Such systems typically include signal-type alarms to alert the home owner to conditions requiring attention. The systems also permit the interactive scanning of data that is collected and stored in the system's memory. In a particularly preferred embodiment of the invention, the pool cleaner chemicals are stored in reservoirs connected to automated measuring and injection valves to permit maintenance of the system from the keypad of a PC or other interactive controller keypad forming part of the system.

While the disclosed method and apparatus have been particularly shown and described with respect to the preferred embodiments, it will be apparent to those skilled in the art from the description provided that various modifications in form and detail may be made therein without departing from the scope and spirit of the invention. Accordingly, modifications such as those suggested above, but not limited thereto are to be considered within the scope of the invention, which is to be determined by reference to the appended claims.

PATENT CITATIONS

Cited Patent	Filing date	Publication date	Applicant	Title
US5218304 *	Mar 8, 1992	Jun 8, 1993	Monsanto Company	Electronic pH and ORP indicator
US5337434 *	Apr 12, 1993	Aug 16, 1994	Aqua Products, Inc.	Directional control means for robotic swimming pool cleaners
US6222449 *	Jul 21, 1997	Apr 24, 2001	Ronald F. Twining	Remote fish logging unit

* Cited by examiner

NON-PATENT CITATIONS

Reference	
1 *	See also references of EP1540812A1

* Cited by examiner

REFERENCED BY

Citing Patent	Filing date	Publication date	Applicant	Title
WO2005035609A1 *	Oct 14, 2004	Apr 21, 2005	Maytronics Ltd.	Cordless pool cleaning robot
WO2007055960A2 *	Oct 31, 2006	May 18, 2007	Zodiac Pool Care, Inc.	Automatic pool cleaner
WO2007055960A3 *	Oct 31, 2006	Aug 2, 2007	Zodiac Pool Care Inc	Automatic pool cleaner
WO2013060982A1 *	Oct 24, 2012	May 2, 2013	Zodiac Pool Care Europe	Device for the remote control of an apparatus that cleans a submerged surface and apparatus thus controlled
WO2013076076A1 *	Nov 20, 2012	May 30, 2013	Aldebaran Robotics	Pool surveillance system and associated surveillance method
WO2014168918A1 *	Apr 8, 2014	Oct 16, 2014	Zodiac Pool Systems, Inc	Systems and methods for wirelessly communicating with automatic swimming pool cleaners
CN104080987A *	Nov 20, 2012	Oct 1, 2014	奥尔德巴伦机器人公司	Pool surveillance system and associated surveillance method
DE102007053310A1	Nov 8, 2007	Jun 10, 2009	Robert Bosch Gmbh	Robotic vehicle has drive device provided for driving and steering robotic vehicle on operating area, and control device is provided for controlling drive device depending on sensor information of sensor device
DE102007053311A1	Nov 8, 2007	Dec 24, 2008	Robert Bosch Gmbh	Ansteuersystem für ein Roboterfahrzeug
EP2821564A3 *	Nov 5, 2014	Feb 25, 2015	Aquatron Robotic Technology Ltd.	Swimming pool cleaner
EP2835478A3 *	Nov 5, 2014	Feb 25, 2015	Aquatron Robotic Technology Ltd.	Swimming pool cleaner
EP2878745A1 *	Nov 20, 2012	Jun 3, 2015	Aldebaran Robotics	System for monitoring a pool and associated monitoring method

Citing Patent	Filing date	Publication date	Applicant	Title
US7690066		Apr 6, 2010	Zodiac Pool Care, Inc.	Automatic pool cleaner
US9250626	Oct 29, 2012	Feb 2, 2016	Zodiac Pool Care Europe	Device for the remote control of a motorized underwater surface cleaning apparatus and apparatus thus controlled
US8388695	Jul 10, 2012	Jul 12, 2016	Aqua Products, Inc.	Pool cleaning system and method to automatically clean surfaces of a pool using images from a camera
US20140303810 *	Apr 8, 2014	Oct 9, 2014	Zodiac Pool Systems, Inc.	Systems and methods for wirelessly communicating with automatic swimming pool cleaners

* Cited by examiner

CLASSIFICATIONS

International Classification	G01N33/18, E04H4/16, E04H4/00
Cooperative Classification	E04H4/16S4, G01N33/182
European Classification	G01N33/18C, E04H4/16C

LEGAL EVENTS

Date	Code	Event	Description
Mar 4, 2004	AL	Designated countries for regional patents	**Kind code of ref document:** A1 **Designated state(s):** GH GM KE LS MW MZ SD SL SZ TZ UG ZM ZW AM AZ BY KG KZ MD RU TJ TM AT BE BG CH CY CZ DE DK EE ES FI FR GB GR HU IE IT LU MC NL PT RO SE SI SK TR BF BJ CF CG CI CM GA GN GQ GW ML MR NE SN TD TG
Mar 4, 2004	AK	Designated states	**Kind code of ref document:** A1 **Designated state(s):** AE AG AL AM AT AU AZ BA BB BG BR BY BZ CA CH CN CO CR CU CZ DE DK DM DZ EC EE ES FI GB GD GE GH GM HR HU ID IL IN IS JP KE KG KP KR KZ LC LK LR LS LT LU LV MA MD MG MK MN MW MX MZ NI NO NZ OM PG PH PL PT RO RU SC SD SE SG SK SL SY TJ TM TN TR TT TZ UA UG US UZ VC VN YU ZA ZM ZW
May 6, 2004	121	Ep: the epo has been informed by wipo that ep was designated in the application	
Feb 2, 2005	WWE	Wipo information: entry into national phase	**Ref document number:** 2003749112 **Country of ref document:** EP
Jun 15, 2005	WWP	Wipo information: published in national office	**Ref document number:** 2003749112 **Country of ref document:** EP
Jul 27, 2006	WWW	Wipo information: withdrawn in national office	**Country of ref document:** JP
Jul 27, 2006	NENP	Non-entry into the national phase in:	**Ref country code:** JP

Google Home - Sitemap - USPTO Bulk Downloads - Privacy Policy - Terms of Service - About Google Patents - Send Feedback

Data provided by IFI CLAIMS Patent Services

WYBOTICS EX1037
Wybotics v. Zodiac
Page 121

English | Deutsch | Español | Français | 日本語 | 中文 | Portugês | Русский | 韩文 | عربي

WIPO PATENTSCOPE

Search International and National Patent Collections

Search Browse Translate Options News Login Help

Home IP Services PATENTSCOPE

Machine translation

1. (WO2009031361) WORKING VEHICLE

PCT Biblio. Data | Full Text | National Phase | Notices | Drawings | Documents

Latest bibliographic data on file with the International Bureau Permalink

Pub. No.: WO/2009/031361 International Application No.: PCT/JP2008/062674
Publication Date: 12.03.2009 International Filing Date: 14.07.2008
IPC: *G05D 1/02* (2006.01), *A47L 9/00* (2006.01), *A47L 9/28* (2006.01), *B09B 5/04* (2006.01), *E04H 4/16* (2006.01)

Applicants: YOTSUYANAGI CO., LTD. [JP/JP]; 24-10, Shikanjima 2-chome, Konohana-ku, Osaka-shi Osaka 5540014 (JP) *(For All Designated States Except US)*.
YOTSUYANAGI, Shigeru [JP/JP]; (JP) *(For US Only)*.
MATSUURA, Takeshi [JP/JP]; (JP) *(For US Only)*

Inventors: YOTSUYANAGI, Shigeru; (JP).
MATSUURA, Takeshi; (JP)

Agent: SUZUE, Shoji; Umeda East Building, 5-15, Taiyujicho, Kita-ku, Osaka-shi, Osaka 5300051 (JP)

Priority Data: 2007-229762 05.09.2007 JP

Title
(EN) WORKING VEHICLE
(FR) VEHICULE DE SERVICE
(JA) 作業車

Abstract:
(EN)The bottom surface of a swimming pool (P) or the like is cleaned thoroughly to the corners. A working vehicle comprises a truck (2) movable freely in the forwards and backwards directions, right and left front touch sensors (50a, 50b) that project forward from the truck (2) and advance/retreat freely and independently, right and left front lead switches (60a, 60b) operated by the movement of the front touch sensors (50a, 50b), and a impeding means (70) for holding one of the front touch sensors (50a, 50b) to project forward from the other and switching the projection holding side alternately. The impeding means (70) supports an interference member (71), which impedes the movement of the front touch sensors (50a, 50b) alternatively by moving to the right and left, by a plurality of rolling members (73a, 73b) from below, and first notches (74a, 74b) and second notches (75a, 75b) for positioning are provided at lower part of the interference member (71) coming into rolling contact with the circumferential surface of the rolling members (73a, 73b) so that the impeding means (70) functions without malfunction.

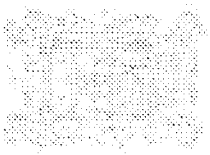

(FR)Selon la présente invention, la surface du fond d'une piscine (P) ou autre est complètement nettoyée dans les coins. Un véhicule de service se compose d'un carrion (2) qui se déplace librement vers l'avant et vers l'arrière, de capteurs tactiles avant droit et gauche (50a, 50b) faisant saillie vers l'avant depuis le carrion (2) afin d'avancer/reculer librement et indépendamment, de commutateurs de sortie avant droit et gauche (60a, 60b) actionnés lors de la progression vers l'avant/l'arrière des capteurs tactiles (50a, 50b), et des moyens d'empêchement (70) pour retenir l'un des capteurs tactiles avant (50a, 50b) pour faire saillie vers l'avant depuis l'autre et commuter de manière alternée le côté de retenue de la saillie. Les moyens d'empêchement (70) soutiennent un élément d'interférence (71) qui bloque la progression vers l'avant/l'arrière des capteurs tactiles avant (50a, 50b) de manière alternée en se déplaçant vers la droite et vers la gauche, par en dessous à l'aide d'une pluralité d'éléments de roulement (73a, 73b). De plus, de premières (74a, 74b) et secondes entailles (75a, 75b) de positionnement sont disposées sur une partie inférieure de l'élément d'interférence (71) qui vient au contact par roulement avec la surface circonférentielle des éléments de roulement (73a, 73b), ce qui permet aux moyens d'empêchement (70) de fonctionner sans problème.

(JA) プール(P)などの底面をすみずみまで万遍なくきれいに掃除する。前後方向に移動自在の台車(2)に、前記台車(2)から前方に向かって突出され、独立的に進退自在とした左右の前接触センサー(50a，50b)と、各前接触センサー(50a，50b)の後退によって操作される左右の前リード入力スイッチ(60a，60b)と、各前接触センサー(50a，50b)の一方を他方より前方に向かって突出した状態に保持し、かつ突出保持する側を交互に切替る阻害手段(70)を備える。阻害手段(70)は、左右に移動させることにより各前接触センサー(50a，50b)の進入を択一的に阻止する左右の干渉部材(71)を、複数の転がり部材(73a，73b)で下方から支え、各転がり部材(73a，73b)の周面が転がり接触する干渉部材(70)の下部に位置決め用の第1の切欠き(74a，74b)及び第2の切欠き(75a，75b)を設け、阻害手段(70)を誤動作なく機能させる。

Designated States: AE, AG, AL, AM, AO, AT, AU, AZ, BA, BB, BG, BH, BR, BW, BY, BZ, CA, CH, CN, CO, CR, CU, CZ, DE, DK, DM, DO, DZ, EC, EE, EG, ES, FI, GB, GD, GE, GH, GM, GT, HN, HR, HU, ID, IL, IN, IS, KE, KG, KM, KN, KP, KR, KZ, LA, LC, LK, LR, LS, LT, LU, LY, MA, MD, ME, MG, MK, MN, MW, MX, MY, MZ, NA, NG, NI, NO, NZ, OM, PG, PH, PL, PT, RO, RS, RU, SC, SD, SE, SG, SK, SL, SM, ST, SV, SY, TJ, TM, TN, TR, TT, TZ, UA, UG, US, UZ, VC, VN, ZA, ZM, ZW)
African Regional Intellectual Property Organization (BW, GH, GM, KE, LS, MW, MZ, NA, SD, SL, SZ, TZ, UG, ZM, ZW)
Eurasian Patent Organization (AM, AZ, BY, KG, KZ, MD, RU, TJ, TM)
European Patent Office (AT, BE, BG, CH, CY, CZ, DE, DK, EE, ES, FI, FR, GB, GR, HR, HU, IE, IS, IT, LT, LU, LV, MC, MT, NL, NO, PL, PT, RO, SE, SI, SK, TR)
African Intellectual Property Organization (BF, BJ, CF, CG, CI, CM, GA, GN, GQ, GW, ML, MR, NE, SN, TD, TG).

Publication Language: Japanese (JA)
Filing Language: Japanese (JA)

WYBOTICS EX1037
Wybotics v. Zodiac
Page 122

Google Translated to: English Show original Options

WIPO PATENTSCOPE

Search International and National Patent Collections

Translated by google

Wipo Translate jaen beta 100%

Search Browse Translate Options News Login Help

Home IP Services PATENTSCOPE

Wipo translate Japanese-English (BETA)

1. (WO2009031361) WORKING VEHICLE

PCT Biblio. Data Full Text National Phase Notices Drawings Documents

Book Details

Titleofinvention

Technicalfield

0001

Backgroundtechnique

0002 0003 0004 0005 0006 0007

Disclosuresofthe Invention

Problems that the Invention Is to Solve

0008

Means for Solving the Problems

0009 0010 0011 0012 0013

Effect of the Invention

0014

Brief description of the drawings

0015 0016

BEST MODE FOR CARRYING OUT THE INVENTION

0017 0018 0019 0020 0021 0022 0023 0024 0025 0026 0027 0028 0029 0030 0031 0032 0033 0034 0035 0036 0037 0038 0039 0040 0041 0042 0043 0044 0045 0046 0047 0048 0049 0050 0051 0052 0053 0054 0055 0056

The scope of the claims

1 2 3 4 5

Drawing

1 2 3 4 5 6

Book Details

In working vehicle

Technical field

[0001] The present invention relates to a work vehicle for performing various operations while moving the limited area surrounded by walls, pool, a general term intended to be full of water in this specification ; Particularly such a pool bottom surface of the of about the work vehicle that can be suitably used for cleaning.

BACKGROUND TECHNIQUE

[0002] As described in Patent Document 1, conventionally, a vacuum cleaner is known to clean the bottom surface evenly with the bottom surface to move in the V-shaped running locus and a pool.

[0003] The Vacuum cleaner disclosed in Patent Document 1, the free by rotation wheels bottom AND MOVABLE in the longitudinal direction of the truck, extending in the lateral direction of the underside of the carriage and apertured suction port downwards And that the inlet suction side IS CONNECTED submersible pump, is connected by a water conduit to the outlet of the water pump and the opened spout toward the front and rear of the carriage The spout of the previous OR POST and the discharge port provided in the water conduit, the switching valve for switching the lead flow path to an alternative to the main structure

[0004] The switching valve is capable of the switching by sliding in the longitudinal direction, the contact sensor is provided in the further switching valve integral to and front and rear ends Contact sensor extends to the left and right and provided at the front and rear, ARE PROVIDED FOUR ONE BY ONE meter to the left and right front and rear sensor rod Among the four contact sensors and the two left or right a fixed sensor, and the other two are configured as a sliding sensor in a state of protruding or retracted than the fixed sensor.

[0005] Before and after the sensor bar, the sliding bar is provided freely further sliding in the lateral direction relative THERETO The right and left ends of the sliding rod is provided right and left contact sensor protrudes to the left and right And when the further side of the left and right contact sensor near the sliding sensor is close to the direction of sliding the sensor, inhibition means for holding the state of projecting the sliding sensor is provided.

[0006] In the above configuration, when power from a power source (not shown) to the water pump, by the operation of the water pump, cleaning from the inlet suction and bottom of the trash On the other hand the pressure discharged from the water pump water discharge opening via the water conduit, is ejected from either one of the spout by the state of the switching valve at that time, truck proceeds by the reaction The cleaner but upcoming butting each sensor both walls and the left and right upcoming abutting the wall, the left side of the sliding sensor remains in a state of protruding. ARE FIRST cleaner is routed slightly in the counterclockwise direction (Ass swing) Also at the same time switching valve SPOUT IS SWITCHED SWITCHING Wall water spout by its sliding and cleaner back slightly shook his direction This automatically repeatedly going to clean the bottom from left to right

WYBOTICS EX1037
Wybotics v. Zodiac
Page 123

[0007] Finally, the right side of the left and right contact sensor is brought into contact with the side wall, the sliding rod is slid to the left direction with respect to the sensor bar The inhibition means Along with this release, the sliding sensor becomes the state of possible immersive That sliding sensor becomes a state in which the retracted than the fixed sensor when it hits the wall, vacuum cleaner sequential drop IN on the left side in every upcoming abutment before and after the wall opposite to the above in this way, to clean the bottom evenly
Patent Document 1: Japanese Patent No. (2579593)

Wipo Translate (aen/beta)
100%

Disclosure of the Invention

Problems that the Invention is to Solve

[0008] In order to clean the bottom of the water evenly in the above vacuum cleaner, left and right contact sensor, the sliding rod is positioned HELD SECURELY until it makes contact with the side wall, and And surely sliding when the left and right contact sensor is brought into contact with the side wall by, it is important to function without malfunction inhibition means However, the sliding rod is just being slidably supported in a cylindrical sensor bar, since that is a structure that mud only at the location sliding resistance, sliding when the vacuum cleaner is but swing dynamic and will be, for example OR approach toward the left side before you approach the vacuum cleaner to the right edge of the pool, also, by, for example, clogging of foreign matter such as dust in the gap of the sliding rod and the sensor bar To the left and right contact sensor SIDE WALL It CAN NOT BE contacted despite sliding sliding rod, repeat or to move back and forth, for example, a vacuum cleaner at the right end of the pool Thus, in the prior art, easily inhibition means malfunctions, to be moved without evenly limited within the area surrounded by the walls of a swimming pool has a problem of lacking reliability.

Means for Solving the Problems

[0009] For the present invention to solve the above problems, a carriage THAT IS MOVABLE in the longitudinal direction, protrudes from the carriage toward one of the moving direction A pair of left and right contact sensor which is independently freely forward and backward, the pair of right and left movement direction switching member operated by the advance and retreat of the contact sensor The HOLD state in which one of the projecting toward one of the movement direction than the OTHER OF EACH contact sensors, and alternately side projecting holding in work vehicle provided with a disturbing part toggle IT S, said inhibition means The extending in the horizontal direction at one end of the carriage, each contact sensor is protruded an interference member for preventing the retreating of the respective contact sensor As one of positional displacement and the other to the other of said contact sensor when opposed to one of the contact sensors, chromatic and said interference member in juxtaposed pair of right and left sensor passing portion A central axis extending in the longitudinal direction and, a plurality of rolling members supporting the lower freely move the interference member in the lateral direction The provided under the said interference member to the peripheral surface of each rolling member is a rolling contact, the one that one of each sensor passing portion first switching to the holding said interference fitting member was incorporated The portion of the peripheral side portion of the first said respective rolling member at the moving position of the interference member facing the contact sensor to the first movement position LACK and the said interference member the SO incorporated Fitting a portion of the peripheral side portion of the second each rolling member in the moving position of the interference member WHICH THE OTHER each sensor passing portion is opposed to the other of the contact sensor the When out second Notches to hold the second movement position, and a further contact sensor pair attached to right and left ends of the interference member that protrudes toward the left and right sides of the carriage The other respective contact in which the interference member by contact of the sensor and configured to be reciprocated in the lateral direction between the two positions of the second movement position and the first movement position By adopting this configuration, erroneous operation inhibition means without it is possible to reliably function, for example to be within the limited area surrounded by the walls of a swimming pool evenly moved without it is possible to secure the Reliability, it can contribute significantly over the prior art, It is intended

[0010] In the present invention, the protruded toward the other of the moving direction of the carriage, are operated and the second contact sensor pair which is freely forward and backward integrally with the advance and retreat of the respective second Contact sensor lateral moving direction a pair of second switching member, each of the second contact sensor is extended in the lateral direction at the other end of the carriage which protrude left and right ends of the sensor mounting arm that Protrudes toward the left and right sides of the carriage and a pair of another second contact sensor attached to parts, the inhibition means While projecting one said other contact sensors close to the contact sensor of one projecting holding side therewith in the same direction the substantially in front of or behind the other second contact sensor is held by the same protruding Position, and protrudes to the side of the other of said other contact sensor is close to the other of the contact sensor allowing retracts therewith in the same direction and are held in the other outer protruding position than in front or behind The other second contact sensor, wherein the one movement direction of the carriage changeover of the respective moving direction switching member to the other either DONE BY one By adding a configuration for switching from said other of the moving direction of the carriage to the one by both the respective moving directions of second switching member Examples surrounded the walls of a swimming pool limited in the area can be moved evenly in Leo-shaped traveling locus.

[0011] In the present invention, the right and left of the contact sensor, the left and right of the second contact sensor, left and right the other second contact sensor is disposed on the left and right symmetrical positions to the symmetrical axis in The longitudinal direction of the center line of the bogie by adding a structure THAT IS, the contact sensor and the second contact sensor, the other second contact sensor IT is subranted to be shared and moving direction switching member and the moving direction second switching MEMBER IN THE LEFT and RIGHT CAN, it is possible to reduce costs Further, the contact sensor and the second contact sensor, the other second contact sensor, pull STRUCTURE SUCH AS a moving direction switching member and the moving direction second switching member IS, since placement and IS LEFT identical, the running locus IT CAN BE EET easily.

[0012] In the present invention, extends in the lateral direction on the lower surface of the carriage, and the aperture suction port downwards, and the water pump suction side is connected to said suction port A discharge side of said water pump by adding a structure comprising a filter to be connected, it can constitute a vacuum cleaner to clean the bottom surface evenly while moving the bottom of a swimming pool.

[0013] In the present invention, the carriage includes a body frame; a prime mover mounted on said vehicle body frame, rotatably is laterally placed on the body frame and one driving axle which is rotated by said prime mover Said drive and left and right drive wheels to rotate integrally mounted on an axle, and the IS disposed in front of or behind the respective driving wheels Left and right driven wheels rotatably mounted via a support shaft extending in the lateral direction on the body frame, by employing a configuration including right and left track belt disposed on the left and right side of the vehicle body frame So as to surround the drive wheel and the driven wheel high, and obtain stable linearity (the axle direction perpendicular) It is possible, for example Within the limited area surrounded by the walls of a swimming pool can be ensured a higher reliability to be moved evenly.

Effect of the Invention

[0014] According to the present invention as described above, inhibition means can be a function reliably without malfunction, ensuring the reliability against for example moving the fenced limited zone in the wall evenly SUCH AS pool IT CAN BE ONE IN WHICH exhibits the remarkable effect of being able to contribute greatly over the prior art.

Brief description of the drawings

[0015] FIG. 1 is a plan view overall showing a work vehicle according to an exemplary embodiment of the present invention
[2] It is an overall side view of a work vehicle according to an exemplary embodiment of the present invention
3 is a side view of one of the contact sensor portion in the moving direction of the working vehicle according to an exemplary embodiment of the present invention
4 is a front view showing the other contact sensor portion in the moving direction of the working vehicle according to an exemplary embodiment of the present invention
FIG. 5 is an explanatory plan view of the other contact sensor portion in the moving direction of the working vehicle according to an exemplary embodiment of the present invention
6 is a plan view of a fenced limited area on the wall showing the travel locus of the work vehicle according to an exemplary embodiment of the present invention.

The description of the code

WYBOTICS EX1037
Wybotics v. Zodiac
Page 124

Wipo Translate jaen(beta) 100%

[0016] The work vehicle
The truck
The suction port
The submersible pump
Filter
The body frame 8
MOTOR
(Motor) 10 The drive axle
A drive pulley (drive
Wheel 12 SUPPORT SHAFT
Driven pulley (driven
Wheel 14 A rubber belt (orbital
The BAND) 30 A sensor next to the connecting rod (sensor mounting
AGM) 30 A 30-B after the contact sensor (the second contact
Sensor) 40 A, 40B after the reed switch (moving direction the second switching
MEMBER) 50 A 50B before contact sensor (contact
Sensor) 60 A 60-B before lead switch (moving direction switching
MEMBER) 70 Inhibition means
The interference member
72A and 72b sensor passing portion
73A, 73b rolling members
74A and 74B first notch
75A, 75b second notch
80A and 80b: the front side of the left and right contact sensor (other contact
Sensor) 90 The left and right contact sensor (the other of the second contact
Sensor) Of 90 b after the side Limited area surrounded by P pool
(Wall) P1, P2, P3, P4 side wall
R2 moving force

BEST MODE FOR CARRYING OUT THE INVENTION

[0017] Hereinafter will be described in detail with reference to embodiments of the present invention with reference to the drawings FIG. 1 is an overall plan view showing a work vehicle according to an exemplary embodiment of the present invention, FIG 2 is an overall side view of a work vehicle according to an exemplary embodiment of the present invention.

[0018] 1 And 2, the working vehicle 1, the carriage 2 WHICH IS MOVABLE in the longitudinal direction (vertical direction) as a working, are extended in the lateral direction (horizontal direction) on the lower surface of the carriage 2 And the lower a suction port 3 which is opened in a water pump 4 to the suction side is connected to the suction port 3 through the flexible tube 3a, filter 5 (eg water Which is detachably connected to the discharge side of the water pump 4 through AND dust comprises filtration bag) and of nylon fabric impervious as an example of cleaning work bottom surface, such as a rectangular pool P (see FIG (6) As an example of fenced limited areas in walls) cleaning constitute a machine.

[0019] The Carriage 2 has a rectangular frame-shaped body frame 6, a rear portion of the vehicle body frame 6 and motor 7 as the prime mover to be mounted on the upper opening shape of the box pin 6a formed in FIG 1, the right side of FIG. , 2). The body frame 6 is rear to be laterally placed rotatably in the state across the inside of the box 8a of the, one of the drive axle Which is operatively connected via a motor shaft 7a and the large and small two of the reduction transmission gear 8 and 9 in the box 6 a 10 When attached to left and right end portions of the drive axle 10 Which protrudes to the left and right outer sides of the vehicle body frame 6, a drive pulley 11 as a left and right driving wheels which carried integrally with the drive axle 10 A front portion of the vehicle body frame 6 and one of the support shaft 12 which is laterally placed rotatably in FIG 1, the left side of FIG , 2), Rotatably mounted on the left and right end portions of the support shaft 12 that protrudes to the left and right outer sides of the vehicle body frame 6 A driven pulley 13 as the left and right driven wheels which are arranged in front of the right and left drive pulley 11, rhong drive pulley 11 and the driven pulley 12 wound lined back and forth arranged in the left and right outer side of the The vehicle body frame 6 horizontally the rubber belt 14 as track zone, is disposed between the drive pulley 11 and the driven pulley 12 arranged in the front and rear The tension roller 15 which presses " the non-grounded side of the rubber belt 14 from above, to adjust the tension of the rubber belt 14, It has been configured with a door.

[0020] In addition, together with the opening top surface of the box 8 a closed by the base plate 4a of the water pump 4, to place the packing 16 between the boxes 6a and the base plate 4a The drive axle 10 IS NOT SHOWN IN part for inserting the box 6 a OIL SEAL place the shaft sealing device SUCH AS, so as to prevent ingress of water into the box 6a This box in the 6a to be kept in an airtight S.O, the controller 17 for controlling the traveling and work of the work vehicle 1 are housed A cable 18 is connected to the controller 17 is disposed a seal member in the portion for inserting the box 6a

[0021] Incidentally, FIG. 2, reference numeral 19 denotes a pump holder for mounting the water pump 4 to the base plate 4a, 20 is detachably attached to the upper side of the carriage 2 The lower surface opening box shape that covers the underwater pump 4 body cover. 21 is attached to the upper surface of the pump holder 19 and a handle disposed so as to protrude above the body cover 20 The discharge port of the water pump 4 which connects the filter 5 on the upper side of the vehicle body cover 20 is also disposed so as to protrude, a cable 18 connected to the controller 17 is also pulled out In addition, a cable 22 of the submersible pump 4 is drawn to the outside from the rear surface of the vehicle body cover (20.)

[0022] Furthermore, the working vehicle 1, the left and right from a rear end of the carriage 2 protrudes rearwardly, as a second contact sensor pair that is freely integrally forward and backward along the center line Y of the longitudinal direction work Vehicle 1 contact sensors 30a and 30b after, the reed switch 40 a AFTER THE RIGHT AND LEFT as the pair of left and right moving direction second switching member operated the rear contact sensors 30a, BY 30b and 40b Toward the front from the front end of the truck 2 are projecting, before contact sensor 50 of the left and right as a pair of left and right contact sensor that was independently freely back and forth along the center line Y of the front and rear Direction work vehicle 1 and 50 bb, each pre-contact sensor 50a, by the advance and retreat of 50 b operated by left and right before the reed switch 60a as a pair of left and right movement direction switching member 60B and the SIDE OF EACH pre-contact sensors 50a, one of the 50 b held in the state of projecting toward more forward on the other hand, and projects a TOGGLE HELD AND ITS inhibition means 70 to alternately The left contact sensor 80a as a pair of horizontal contact sensor before and after the placement in the left outside of the truck 2, 90 an and As a pair of horizontal contact sensor before and after the placement to the right outside of the truck 2 right contact sensors 80, as IT has a 90 b FIG. 1, with reference to the post-contact sensor 30a to FIGS. 2 And 3, 30 and each of the rear reed switch 40, 40b and rear right and left contact sensor 90a, a 90b described, then 1, 2 and 4, each pre-contact sensor 50 with reference to FIG 5 Of 5, 50, each FREE reed switches 60a, 60b, inhibition means 70, the front left and right contact sensor 80a, 80b explain.

[0023] FIG. 3 is a side view of the contact sensor portion of the rear side of the working vehicle according to an exemplary embodiment of the present invention. AS SHOWN IN FIG 1, 2 And 3, the rear contact sensors 30a, 30b is cylindrical and shaped for the sensor cap 31, having a piston-shaped sensor stopper portion 32a which is slidably fitted into the sensor cap 31 at one end Protruding from the sensor stopper portion 32a on the outer side of the sensor cap 31 sensor rod 32, disposed within the sensor cap 31 The sensor spring 33 is a coil spring for biasing the sensor rod 32 in the protruding direction via the sensor stopper portion 32a So as not to damage the side wall of the pool P of the contact object (most THERETO IT IS constructed and a substantially hemispherical contact 34 made against synthetic resin A sensor cap 31 and the sensor stopper portion 32a, the sensor rod 32, the sensor spring 33 is disposed coaxially constitute a cylinder structure on one side of a rod type which expands and contracts along the center line Y of the longitudinal direction of the work vehicle 1

[0024] Each rear reed switch 40a, 40b, independent and the magnet portion 41, IS MORE THAN TWO CONFIGURATION OF THE SWITCH UNIT 42, a magnet switch contact 43a of the switch unit 42 by the approach or the isolation of both 43B (normally open) is opened and closed. There is used, the magnet unit 41 is arranged in the center of the sensor stopper portion 32a of the sensor rod 32 The switch section 42 to the rod side of the sensor cap 31 is disposed at the inner end opposite, both sensor rod 32 and are opposed coaxially Thus, the rear reed switch 40A, 40B is configured to open and close by a reciprocating sensor rod 32

[0025] Each left and right contact sensor 90a, 90b, contact so as not to damage the side wall of the pool P of the contact object, and as rotation rolling contact) to after the contact to rolling to rotate around a vertical shaft 91 extending in the vertical direction of a disc-shaped roller is used in synthetic

WYBOTICS EX1037
Wybotics v. Zodiac
Page 125

[0026] Then, the sensor cap 51 is attached in a state where each sensor rod 52 to the left and right sides of the rear end of the body frame 6 (posterior aspect of the box (2a) protrudes toward the rear The contact at the tip of each sensor rod 52 34 the installation, contact sensor 30a after the left and right from the rear and side of the carriage 2 is projected toward the rear, but IT IS TO CONSTRUCT a30 and each rear contact sensors 30a 30B of the contacts 34 and the sensor rod 52 of a work vehicle to advance and retreat integrally along one of the longitudinal center line Y The tip end side of each sensor rod 52 is integrally connected to one another by a sensor transverse connecting rods 36 extending in the lateral direction of the carriage 2 Each rear contact sensor 30a by the coupling, the sensor transversally connecting rod 36 which is movably in the longitudinal direction to the rear end of the vehicle body frame 6 through a cylinder structure 36b From the rubber portions and extending further to the right and left outside, the rear surface of the sensor horizontal connecting 6 as to protrude rearward provided slightly narrower interval than inter-dimension of each rubber belt 14 In addition, the rear of the left and right contact sensor 90a, AS -90 b approximately half of IS located on the outside than the rubber belt 14 The left and right of the sensor next to the connecting rod 36 after the side of the left and right contact sensor 90a, the 90b through the central axis 91 rotatably mounted at both ends upward, lateral contact sensors 90a of the REAR SIDE, 90b Right and left rear contact sensors 90a, 90b is extended in the lateral direction at the rear end of the carriage 2 being protruded left and right bogie 2 k IS SET TO THE OTHER second contact sensor pair attached to left and right end portions of The sensor mounting arms protrude toward both sides (the sensor horizontal connecting rod 36.

Nigo Translate jaen beta 100%

[0027] In addition, post-contact sensors 30a, 30b, and rear reed switches 40a and 40b, the rear of the left and right contact sensors 90a, 90b and the sensor next to the connecting rod 36 Symmetrical structure of the center line Y of the longitudinal direction of the working vehicle 1 as the axis of symmetry the HAS.

[0028] Further, the lead wire 44 of each switch 42, the rod side of the sensor cap 51 is connected from the opposite end is pulled in a box 6a of the vehicle body frame 6 to the controller 17 The controller 17 each rear leads is circuitry configured to output switch 40, the moving direction switching signal for driving reversely rotate the motor 7 by the at 80 OUTPUT OF 40b to the motor drive circuit.

[0029] FIG. 4 is a front explanatory view of the contact sensor portion of the front side of the working vehicle according to an exemplary embodiment of the present invention FIG. 5 is a plan explanatory view of a contact sensor unit of the front side of the working vehicle according to an exemplary embodiment of the present invention, 1, 2 and 4, AS SHOWN IN FIG 5, 8 each pre-contact sensors 50a and 50b includes a cylindrical sensor cap 51, a piston-like sensors fitted slidably into the sensor cap 51 has a stopper portion 52a in the axial direction intermediate portion Damage to the both ends from both sides of the sensor cap 51 and sensor rod 52 projecting outwardly is attached to one end of the sensor rod 52 The side wall of the pool P of the contact object urging internally a substantially hemispherical contact 53 made of a synthetic resin abutting THERETO, it is arranged on the sensor rod 52 outside between the sensor cap 51 and contact 53 The contact 53 attachment side of the sensor rod 52 in the protruding direction and a sensor spring 54 is a coil spring is configured to A sensor cap stopper portion 51 and the sensor 52, the sensor rod 52, contacts 53, the sensor spring 54 is coaxially disposed, constituting the cylinder STRUCTURE OF EACH side rod type which expands and contracts along the center line Y of the Longitudinal direction one doing work vehicle1.

[0030] Each before the reed switch 60a, 60b and the rear reed switch 40, the same magnet SWITCH AND 40b is used, the magnet section 61 (41) and the contact 53 mounted side of each of the sensor rod 52 ends the center of the anti-the other side disposed parts The switch section 62 (42) is attached via the switch mount 65 to the front end left and right outer sides of the vehicle body frame 6, both faces with the sensor rod 52 coaxially Thus, each PFE reed switches 50a, 60b are configured to open and close by a reciprocating rod (52.) SENSOR

[0031] Front left and right contact sensors 80a and 80b on the rear of the left and right contact sensors 90a, the same roller and 90b are used and rotates in the vertical axis 81 around which extends in the vertical direction.

[0032] Then, extending in the lateral direction on the front side of the carriage 2, includes a sensor plate 80 which extends to the left and right end portions in front of the rubber belt 14 is passed through the front side of each switch section 62 The front end of the vehicle body frame 6 the sensor plate 80 from the front side of the vehicle body frame 6 mounted via the four BOLTS 100 and spacer 101 in a state of being separated by a predetermined distance forward The right and left side end portions of the sensor plate 80 front side, of the sensor rod 52 Attach the sensor cap 51 in a state in which the contacts 53 mounted side is projected toward the front Protruding toward the front from the front end side of the truck 2, the front-rear direction of the center line Y of the work vehicle 1 the contacts 54 and the sensor rod 52 RIGHT and LEFT front contact sensors 50a to independently advance and Retreat along the constitute a (50b.)

[0033] Moreover, each pre-contact sensors 50a and 50b, each post contact sensor 30a in the axis in plan view, are arranged to coincide with the center line of the contact 34 of the 30b, the sensor plate 80, each pre-contact sensors 50a a through hole 102a of the left and right axes coaxial with the 50 b 102b ARE PROVIDED, the contact 53 attachment side of the sensor rod 52 and the other side behind the sensor plate 80 through the through-holes 102a 102B to advance and retreat along the center line Y of the longitudinal direction of the work vehicle 1, and configured to open and close the contacts 63a (not shown) of the switch section 62 by the approach or sequestration of the magnet unit 61 and the The switch units 62 and 63 (the normally open) there.

[0034] Also, before contact sensor 50a, 50b before the reed switch 60a, 60b has a symmetric structure with the center line Y in the longitudinal direction of the working vehicle 1 as an axis of symmetry.

[0035] Further, the lead wire 64 of each switch 62, the collective from the cable holder 103 provided on the front wall of the box 6a of the vehicle body frame 6 is retracted into the box 6a is connected to the controller 17 The controller 17 before the RIGHT AND LEFT ARE circuit configured to output a reed switch 60, the moving direction switching signal for the motor 7 to reverse driven by the OR OUTPUT OF 60b to the motor drive circuit.

[0036] Inhibition means 70, in order to selectively block the retreating of each sensor rod 52 is disposed in the gap of the vehicle body frame 6 and the sensor plate 80 Left and right upper side of the spacer 101 through between the left and right lower side of the spacer 101 extending in the lateral direction And the respective magnet portions 61 and the interference member 71 to the right and left end portions across between the rubber belt 14 narrow tabular extending further to the right and left outer side than the respective switch portions 62 And are arranged in parallel in the interference member 71 with a mutual spacing of mutual spacing different from the centerline axis of each sensor rod 52 A slightly become larger diameter of the pair of left and right through holes from each sensor rod 52, one of the center line left and right but this line facing the sensor rod 52 And which does not face the sensor rod 52, the other of the center line is misaligned to the left or right from the axis of the other sensor rod 52 coincides with the axis of one of the sensor rod 52, a pair of sensor passage portion 72a, and 72b , Has a horizontal central axis 73 extending in the longitudinal direction and is pivotally mounted on the sensor plate 80, rotatably disposed in the central shaft 73 around the gap of the body frame 6 and the sensor plate 80 are Each sensor passing portion 72a, is brought into contact with the interference member 71, the lower part of the inner peripheral surface (rotation surface than 72b A plurality (in this embodiment consisting of rolling wheels that support the interference member 71 to be MOVABLE in the horizontal direction from below in the form provided rolling member 73a of the left and right two) and 73b The bottom of the interference member 71 each rolling member 73A, the circumferential surface of the 73b is rolling contact, facing the left side of the sensor passing portion 72a is on the left side of the sensor rod 52 first RIGHT AND left The approximately semicircular first respective rolling members 73a at the moved position, the interference member 71 so incorporated fitting a portion of the peripheral side portion of 73b is held at the first movement position of the interference The member 71 to notches 74A and 74B and the right side of the second mobile position rolling each AT (Illustrated position) member 73a of the interference member 71 to the sensor passing portion 73b is opposed to the right side of the sensor rod 52 a part of the peripheral side of 73b of the left and right second notch 75a of the substantially semicircular was allowed incorporated fitting to retain the interference member 71 to the second movement position (first notch 74a 74B of the same shape, and 75B, the interference member 71, The left and right end portions upper side through the central axis 81 attached rotatably front lateral contact sensors 80a, and a80, front left and right contact sensor 80a An interference member 71 by contact with the side wall of the pool P of the 80 b FIRST. It IS configured to reciprocate in the lateral direction between the first movement position and second position of the second movement position Here, the interference member 71 made of metal such as stainless steel in the member is made of metal to support, SO DO NOT BE, a metal-to-metal contact, member or rolling members 73a to support the metallic interference member 71 In a73, the rolling wheel made of synthetic resin is used.

[0037] Further, inhibition means 70 May, when holding the interference member 71 in the first movement position, parallel to the center line Y of the longitudinal direction of the working vehicle 1 And passes through the center of the rear side of the left contact sensor 90 a STRAIGHT LINE to position the center of the front of the left contact sensor 80a to the left outside than Along with the project held in the left outer side of the left contact sensor 80a of the rear of the front side of the left contact sensor 80A, the interference member 71 SHOWN IN THE DRAWING the second when the mobile is held in position in the longitudinal direction of the working vehicle 1 is parallel to the center line Y, the rear right contact sensors 90b center right outer side than the straight line passing through the front side of the right contact sensors 80b of the center is located, projects held in right outside than the right contact sensor 90b of the rear of the front side of the right contact sensor 80b The IE projecting outwardly than the lateral

[0038] Furthermore inhibition means 70 May, when holding the interference member 71 in the first movement position, parallel to the center line 7 of the longitudinal direction of the working vehicle 1 And passes through the center of the rear side of the right contact sensors 80 b on a straight line to position the center of the front of the right contact sensor 80b to Along with the approximately projects held at the same position in the lateral direction and the right contact sensor 80b of the rear of the front side of the right contact sensor 80b An interference member 71 and the second of the illustrated when holding the movement position, to position the center of the front left contact sensor 80a in the [illegible] with the center line 7. A straight line passing through the center of the rear of the left contact sensors 80a of the [illegible] held at the same horizontal position as the left contact sensor 90a of the rear of the front side of the left A [illegible] sensor 90a or 90b of the side after projecting a horizontal contact sensor 80a or 80b of the in front of the side [illegible] 50b of the side that was held in the projected state to prevent retracts in the same direction in its rearward and IT IS configured substantially as to project held at the same position in the lateral direction.

Word Translate beta 100%

[0039] Left and right contact sensor 90a of the rear side by this way inhibit means 70, the front side of the left and right contact sensor 80a of the left-right direction position is displaced with respect to 90b. the 80b The left and right of the front contact sensor 50a, the front end of the truck 50 b is projected in to extend in the lateral direction And a pair of right and left other contact sensors attached to left and right end portions of the sensor mounting arm that protrudes toward the left and right sides of the carriage 2 (interference member

[0040] The configured operations of the work vehicle 1 as described above will be described with reference to FIG FIG. 6 is a plan view of the pool showing the travel locus of the work vehicle according to an exemplary embodiment of the present invention The work vehicle 1 placed in the pool P for water IS naundingly, connected in a power supply (not shown) cables 18, 22, by operating the water pump 4 and the motor 7 by operating a hand switch, a work vehicle 1 While moving the bottom of the pool P by the operation of the motor 7, whereas the dust of the bottom from the truck 2 the bottom surface of the suction port 3 together with the water by the operation of the water pump 7 To separate the water and dust by the filter 5 trash It was recovered in the filtration unit 5, to clean the bottom of the pool P

[0041] In this case, the AS SHOWN IN FIG 6, one side wall P1 of the long side of the pool P (BOTTOM SIDE WALL of FIG 6, hereinafter, referred to as "lower wall" Long side. Of the previous work vehicle 1 from the time of the other side wall 2 of the side (upper side of the side wall of FIG 6, hereinafter referred to as The upper wall "), a work vehicle 1 was placed in the pool P in a posture facing in, the start of the first forward driving the work vehicle 1 from the input position a LEFT initial setting of the controller 17 As a result, the work vehicle 1, went closer to the upper wall P2 while moving upward from the bottom of FIG 6, before contact sensor 50 of the left and right from the carriage 1 are projected at the same position in the front-rear direction Forward, 50b contact of child 52a substantially fart abutment to the upper wall P2 at the same time, because retracts causes the sensor rod 52 of one of the pre-contact sensor 50a or 50b by the state of the inhibition means 70 at that time The BEFORE AND this retracts the contact sensor 50 on or rear side of the truck 2 to 50 b side is swing sideways, the posture of the work vehicle 1 is inclined with respect to the overall upper wall P2 in the illustrated, since the interference member 71 in the inhibition means 70 is in a state of being held in the second movement position, the sensor rod 52 of the right front contact sensor 50b IS retracts The side is swung to the right after the truck 2 do this after the description of operation on the basis of the state of this work vehicle 1 immediately after this, because by the sensor rod 52 of the right side of the front contact sensor 50b is right before the reed switch 56b is closed, the motor 7 is reversed by the output of this right before the reed switch 56b From the forward direction of movement of the work vehicle 1 It is switched to the reverse.

[0042] Such a movement direction and attitude change due to contact with the upper wall P2 switching, work vehicle 1 starts reverse travel after contacting the upper wall P2, while moving from the top in FIG 6 obliquely to the right " go closer to the lower wall P1 As a result, the contact sensor 30a after the left and right from the carriage 1 are projected at the same position in the front-rear direction in the rear, out of the 30 b of the contacts 34 An upcoming abutting contact 34 of the contact after the left side of the sensor 30 is in the upper wall P2 ahead since, the front side of the carriage 2 is swung to the right The contact 34 of the right-hand side after the contact sensor 30b is BY upcoming abutment to the upper wall P2 Along with this, perpendicular to the work vehicle 1 of posture the LOWER SIDE WALL P2 It is returned immediately after this, the left and right rear contact sensor 30a, and the sensor rod 32 or both retracts of 30b, the left and right rear reed switches 40a, 40b are closed together because, the motor 7 by these left and right rear reed switch 40a 40b AND OUTPUT OF but IT reversed, the direction of movement of the work vehicle 1 is switched from reverse to forward, such a posture change to the moving direction due to the contact of the lower wall P1 switching The working vehicle 1 again forward after contact with the lower side wall P2 It starts running.

[0043] The Work vehicle 1 as described above, by switching the attitude change due to the contact of the upper wall 2 and the direction of movement switching and direction of movement and posture change caused by the contact of the lower wall P1 Between the lower wall P1 AND THE UPPER SIDE WALL P2 one round trip in the Let shaped running locus open down, gradually shifted to the right edge of the pool P from the input position a while repeating it in the travel locus R1 of zigzag As shown by the solid line in FIG. 6

[0044] Further, the working vehicle 1 is one side wad of the short side of the pool P, that is, reaches the line of the right side wall (right side wall in FIG 6. The working vehicle 1 approaches the RIGHT SIDE WALL P3 along with the movement in the reverse running process, the right contact sensor 80b of the front and rear projecting from the carriage 2 in the outer right out of the 90b Rolling contact after the right contact sensor 90b of the rear side is in contact with the right side wall P3 ahead. before the truck 2 SIDE IS continue to gradually close to the right side wall P3 And finally, the front side of the right contact sensor 80b is pressed to the left in contact with the right side wall P3 Accordingly, the interference member 71 in the inhibition means 70 is moved to the left, the second notch 75a, 75b is disengaged from the respective rolling members 73a, 73b, a first notch 74a and 74b each rolling members 73a 73B is incorporated fitted in, are held, movement from the second position to the first mobile position, inhibition means 70 is a sensor rod 52 of the pre-contact sensor 50 of the left side as a possible retracts The sensor rod 52 of the right-hand side of the front contact sensor 50 is held due to the projecting state, also, along with the project held in substantially the same position in the lateral direction and the right contact sensor 90b of the rear of The front side of the right contact sensor 80b. from left contact sensor 90a of the rear of the front side of the left contact sensor 80a also projecting held outside..

[0045] Each transverse directions by contact with the right wall P3 switching work vehicle 1, rolling right contact sensor 80B is projected before and substantially held in the same position in the lateral direction from its switching position B AND 90b to the RIGHT SIDE WALL P3 while in contact moves to the lower wall P1 along the right side wall P3, by switching the direction of movement by the contact of the lower wall P1 at the position C, . Which has moved to the upper wall P2 along the right side wall P3, contact to the upper wall P2 by although perform switching of attitude change the moving direction, this time in a state of interference member 71 , Which is already held in the first movement position of the inhibition means 70, the sensor rod 52 of the front contact sensors 50 on the left side retreat since the entry, rear side of the truck 2 is swung to the left side in addition, the attitude change by the contact to the upper wall P2 since this will be the attitude changes that shake the rear side of the truck 2 on the left side, also The attitude change due to the contact of the lower wall P1 attitude changes that shake the front side of the truck 2 on the left side to become.

[0046] The Work vehicle in the above-mentioned SO1, by the posture change due to the contact of the upper wall 2 and the direction of movement switching and attitude change due to the contact of the lower wall P1 and in the direction of movement switched " C ", the lower wall P1 AND THE UPPER SIDE WALL P2 during one round trip in the Le-shaped running locus open above And gradually shifted to the left from the right edge of the pool P while repeating IT from the C position in the travel locus of zigzag P2 as shown by the broken line in FIG 6

[0047] Furthermore, the other side wall of the short side of the work vehicle 1 is a pool P THAT IS, reaches the line of the left side wall (side wall on the left side of FIG 6. The working vehicle 1 approaches the left side wall 4 along with the movement in the reverse running process, the left contact sensor 80a of the front and back from the carriage 2 is projected to the left outside, out of the 90a Rolling contact after the rear side of the left contact sensor 80a is in contact with the left side wall P4 ahead, before the truck 2 SIDE IS continue to gradually close to the left wall P4 Finally, the front side of the left contact sensor 80a is pressed to the right side in contact with the left side wall 4 Accordingly, the interference member 71 in the inhibition means 70 is moved to the right side, the first notch 74a, 74b is disengaged from the respective rolling members 73a, 73b, the second notch 75a and 75b each rolling members 73a 73B is incorporated fitted in, are held from the first position to the second mobile mobile position. Inhibition means 70 is possible retracts the sensor rod 52 of the pre-contact sensor 50b of the right-hand side again On the left side of the pre-contact sensor 50 a sensor rod mid a52 in the projecting state, also, the front side of the along with the approximately projects held at the same position in the lateral direction and the left contact sensor 90a of The rear of the left contact sensor 80A, the front side of the right contact sensor 80b right contact sensor 90b on the rear side of the project held in the outside lean.

[0048] Each rampant direction due to the contact to the left wall P4 switching work vehicle 1, rolling the switching position D from substantially the same position in the lateral direction to the protruding interest before and after the left contact A sensor 80, a 90b on the left side wall P4 while in contact moves to the lower wall P1 along the left side wall 4, in a position E that has moved to the upper side wall P2 along the left side wall 4 by switching the direction of movement by the contact of the lower wall P1, contact to the upper wall P2 by although perform switching of attitude change the moving direction. The interference member 71 in the inhibition means 70 at this time is already being held in the second movement position, the sensor rod 52

WYBOTICS EX1037
Wyhotics v. Zodiac
Page 127

change due to the contact of the lower wall P1 attitude changes that shake the front side of the truck 2 on the right side to become.

[0049] The Work vehicle 1 as described above, by the posture change due to the contact of the upper wall 2 and the direction of movement switching and attitude change due to the contact of the lower wall P1 and in the direction of movement switched from E Position, the lower wall P1 AND THE UPPER SIDE WALL P2 BETWEEN 1 AND forth tea-shaped running locus open down, it gradually shifted to the right and from the left edge of the pool P in the travel locus R1 of zigzag, as shown by the solid line in FIG 6 From the E position while repeatedly go.

Wipo Translate (aen/beta) 100%

[0050] Therefore, the working vehicle 1, by travel and move in the endless the bottom of the pool P in each travel locu is possible to clean the bottom of the pool P every corner until evenly clearly, also For travel locus R1, R2 is a the cable 18, 22, or running of the work vehicle 1 is inhibited by with fault of the cable 18, 22 and also disadvantages such as accidentally clogged causing hard to be one.

[0051] Incidentally, the traveling direction of the working vehicle 1 at the work start is advanced, may be placed and set in any reverse movement.

[0052] The Working vehicle according to the present embodiment as described above, includes a carriage 2 which is MOVABLE in the longitudinal direction, the protruded toward the carriage 2 to one of said movement direction independently of retractably and the pair of left and right contact sensors 50a, and each of the contact sensor 50, a pair of left and right movement direction switching member 60a, which is operated by the advance and retreat of 50b and 50b Each of the contact sensors 50a, one of the one of the moving direction than the other towards and held in a state of protruding, and provided with a toggle its inhibition means 70 alternately side projecting holding, the inhibition means 70 The left-right direction at one end of the carriage 2, wherein each contact sensor 50a, 50b is projected It is extended to each of the contact sensor 50, and the interference member 71 to prevent the retreating of 50b Position the other IS with respect to the other of the contact sensor 50a or 50b when one is opposed to the one of the contact sensors 50a or 50b as displacement, the juxtaposed in the interference member 70 a pair of sensor passage portion 72a AND 72b having a central axis 73a extending in the longitudinal direction, support from below to freely move the interference member 70 in the lateral direction multiple of rolling members 73a, 73b and each of the rolling member 73a Provided on the lower portion of the interference member 70 to the peripheral surface of the 73b is rolling contact, each of the sensor passing portion 72a Said contact sensor 50 an one is one of the 72b OR the first movement position in the respective rolling members 73a of the interference member 70 which faces the 50b Thereby incorporated by fitting a portion of the peripheral side portion of the 73b first retaining said interference member 70 in the first movement position one of notches 74a, 74b and each of the sensor passing portion 72a 72b of the other and the other of said contact sensor 50 or the second movement position in each of the rolling member 73a of the interference member 70 which is opposed to 50b 73B circumference of the second notch 75 for holding the interference member 70 so incorporated fitting part of the side to the second movement position, 75b and Protruding toward the left and right sides of the carriage 2 of the interference member 70 other contact sensors 80a of the pair attached to the left and right end portions, and a 80 and the other respective contact sensors 80a 80B and the second movement position and the first movement position to the interference member 70 by contact of those that is reciprocated in the lateral direction between the two positions, for example, THE UPPER AND LOWER SIDE WALL P2 Changing of the posture of the work vehicle 1 due to the contact of the P1, the left and right side wall P4, contact of attitude change due to the switching of rampant direction due to P3 when As a pressing force in the lateral transverse direction is applied to the interference member 70, the interference member 70 to the rolling member 73a, 73b in the first notch 74A and 74B or the second notch 75a, 75b the fitting of Each of the other contact sensors 80a and 80b are SECURELY position holding until it contacts the side wall 3, P4 and without rolling members 73a by sliding the interference member 70 moved by contacting rolling on 73b Each of the other contact sensors 80a and 80b is to reliably move when in contact with the side wall 3, and inhibition means 70 can be a malfunction without function Reliability for moving the in the pool P evenly (it is possible to ENSURE the reliability) of the working performance, it can contribute significantly over the prior art.

[0053] The Left and right articles of the carriage 2 is protruded toward the other direction of movement, is operated a second contact sensor 30a of the pair which is freely integrally forward and backward, and 30b, each of the second contact sensor 30a The advance and retreat of 30, a pair of moving direction second switching member 40a and 40b, each of the second contact sensor 30a, 30b is extended in the lateral direction at the other end of the carriage 2 to be protruded Protruding toward the left and right sides of the carriage 2 is a sensor mounting arm other pair of left and right is attached to the left and right end portions of the 30 second contact sensor 90a, and a 90 and the inhibition means 70 The side closer to the contact sensor 50A or 50 b of one protruding retention is held substantially at the same position in protruding in front of or behind the one of the other contact sensors 80a OR of one said other projecting a 80b THERETO IN THE same Direction the second contact sensor 50a or 90b, and were allowed to retreats the other of said contact sensor 50a or 50b on the side closer to the other of said other contact sensors 80a other of the others OR have 80b BY the SAME by projecting in the The same direction a second contact sensor 90a, than in front or behind the 90 b held on the outside of the protruding position, wherein the respective moving direction switching member 60 a the switching of the said movement direction of the carriage 2 From one to the other, carried BY ONE OF 60b, wherein in the moving direction of the carriage 2, the second switching member 40a each moving direction, switching from the other to the one, and performs the both 40b It can be moved in a pool P in LES-shaped running locus R2 evenly, the bottom of the pool P can be cleaned in every nook and corner to evenly clean (improvement of work performance

[0054] The contact sensor 50 of the left and right, 50 and left and right of the second contact sensor 30a, 30b, right and left of the other second contact sensor 80a 90b is symmetrical to a symmetry axis in the longitudinal direction of the center line of the bogie 2 is one that is disposed at a position, the contact sensor 50a, 50b and the second contact sensor 30a, 30b and the other second contact sensor 90a, 90b Pulling the moving direction switching member 60a, 60b and the second moving direction, switching member 40a, can be shared 40b and the left and right, it is possible to reduce costs in addition, the contact sensors 50a and 50b and the second contact sensor 30a, and the other of the second contact sensor 90a, 90 and minus IS moving direction switching member 60a, 60, and the moving direction, the second switching member 40A, 40B, etc in the structure, since placement and IS LEFT identical, it is possible to easily perform setting of the travel locus R1, various operations, corresponding improvement to an use environment

[0055] The carriage 2 includes a vehicle body frame 6, a motor 7 mounted on the vehicle body frame 6, is laterally placed rotatably on the body frame 6, a single drive axle 10 which is rotated by the prime mover 7 Wherein the drive and left and right drive wheels 11 rotating integrally mounted on the axle 10, the disposed forward or rearward of the drive wheels 11 rotatably mounted via a support shaft 12 extending horizontally in the vehicle body frame 6 The left and right driven wheels 13, as IT has the drive wheel 11 and the track belt 14 of the left and right that are arranged on the left and right side of the vehicle body frame 6 so as to surround the driven wheels 13 A high and stable straightness (axle perpendicular direction) can be obtained, improvement and various tasks (task performance can be ensured a higher reliability (reliability of the work performance) to be moved in a pool P evenly Use environment corresponding improvement to)

[0056] Above, the present embodiment showed an exemplary embodiment of the working vehicle of the present invention, the present invention is not limited THERETO, and may be variously modified within a scope not departing from the gist thereof.

The scope of the claims

[1] A carriage WHICH IS MOVABLE in the longitudinal direction, protrudes from the carriage toward one of the moving direction, pair which is operated with A right and left pair of contact sensors attached to freely independently forward and backward By advancing and retracting the respective contact sensor the moving direction switching member, at one was kept in a state of protruding toward the one of the movement direction than the other And work vehicle provided with a toggle its inhibition means alternately side projecting holding of the respective contact sensor, the inhibition means Each contact sensor is extended in the horizontal direction at one end of the carriage which protrude, an interference member for preventing the retreating of the respective contact sensors When one faces the one of the contact sensors at the other position deviation relative to the other of said contact sensor comprises a said interference member in juxtaposed pair of right and left sensor passing portion A central axis extending in the longitudinal direction, said interference member movably in the lateral direction to a plurality of rolling members that support from below the provided under the said interference member to the peripheral surface of each rolling member is rolling contact, the interference member which one of each sensor passing portion is opposed to one of the contact sensors the first notch and the OTHER other of said each sensor passing portion for holding said interference member was incorporated fitting portion of the peripheral side portion of the first said respective rolling member at the moving position of the first movement position OUT THE SECOND CUT-OUT that of holding the interference member was incorporated fitting part of the peripheral side of the second each of the rolling member in the movement position of the interference member which is opposed to the contact sensor To the second mobile position When provided with the other contact sensor pair attached to right and left ends of the interference member that protrudes toward the left and right sides of the carriage The other of the said interference member by contact of each contact sensor first movement position and working vehicle, characterized by reciprocating in the lateral direction between the two positions of the second movement POSITION OF.

[2] The protruded toward the other of the moving direction of the carriage, integrally with the second contact sensor pair which is freely forward and backward The pair of left and right moving direction second switching operated by advance and retreat OF EACH OF THE SECOND CONTACT

WYBOTICS EX1037
Wybotics v. Zodiac
Page 128

the other second contact sensor, wherein the inhibition means, second contact of one projecting one said other contact sensors close to the contact sensor of one projecting holding side therewith in the same The direction of the other sensors generally is held by the same protruding position in front or behind the and the other one of said other projecting side of the other of said other contact sensor is close to the other of the contact sensor allowing Retracts therewith in the same direction held on the outside of the protruding position than in front or behind the second contact sensor Switching from said one of said moving direction of the carriage to the other is performed by either one of the respective moving direction switching member, wherein work vehicle according to claim 1, Wherein the switch from the other of the moving direction of both of each of the moving direction, the second switching member.

Wipo Translate jaen(beta) 100%

[3] The left and right of the contact sensor, the left and right of the second contact sensor, left and right the other second contact sensor is in relation to the longitudinal direction of the center line are arranged symmetrically positioned to the axis of The symmetry of the carriage work vehicle described.

[4] Extending in the lateral direction on the lower surface of the carriage, and comprises a suction port apertured downwards, and the water pump suction side is connected to the suction port The filter being connected to the discharge side of said water pump working vehicle according to any one of claims 1 to 3

[5] The carriage includes a body frame, a prime mover mounted on said vehicle body frame, wherein the laterally placed rotatably on the vehicle body frame, one driving axis which is rotated by said prime mover integrally mounted on the drive axis and left and right drive wheels to rotate, the is disposed in front of or behind the respective driving wheels Left and right driven wheels rotatably mounted via a support shaft extending in the lateral direction in the body frame. the driving wheel and the driven wheel working vehicle according to any one of claims 1 to 4 comprising a lateral trajectory A band disposed on the left and right side of the vehicle body frame so as to surround the..

Drawing

[FIG. 1]

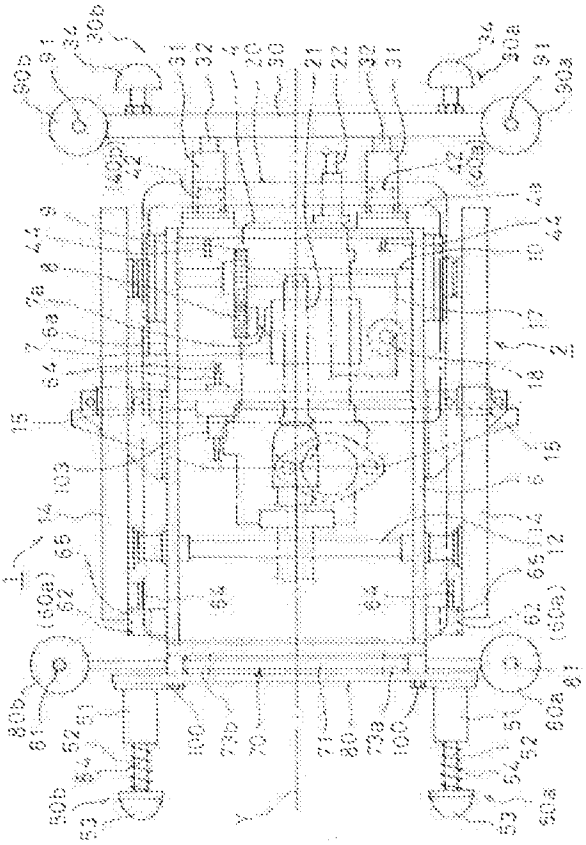

[FIG. 2]

WYBOTICS EX1037
Wybotics v. Zodiac
Page 129

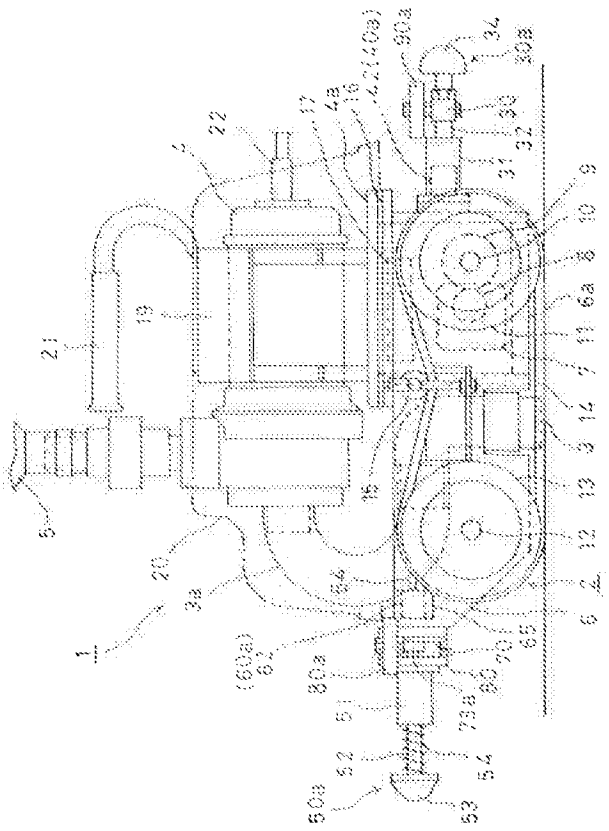

[FIG. 3]

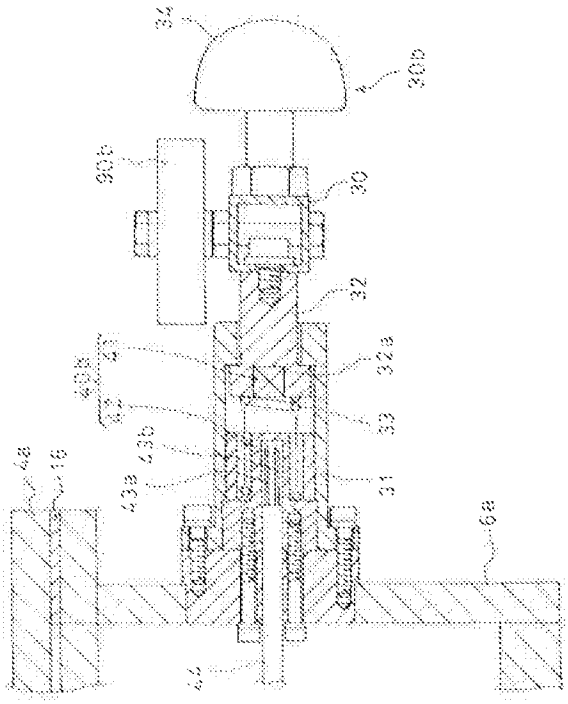

[FIG. 4]

WYBOTICS EX1037
Wybotics v. Zodiac
Page 130

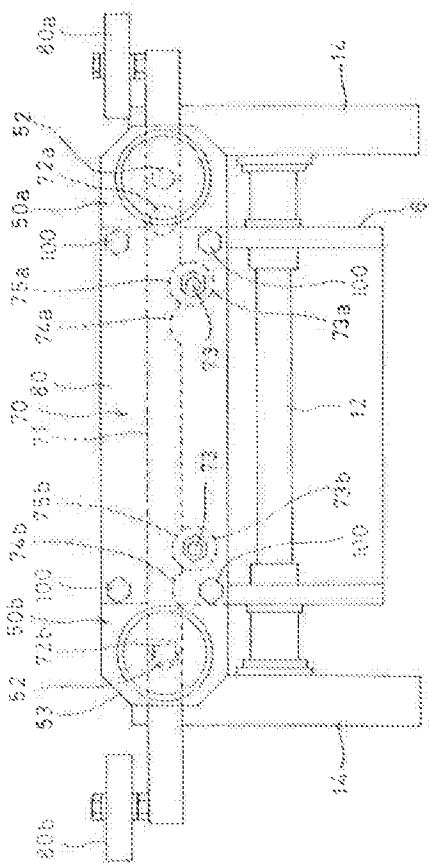

Wipo Translate (beta) 100%

[FIG. 5]

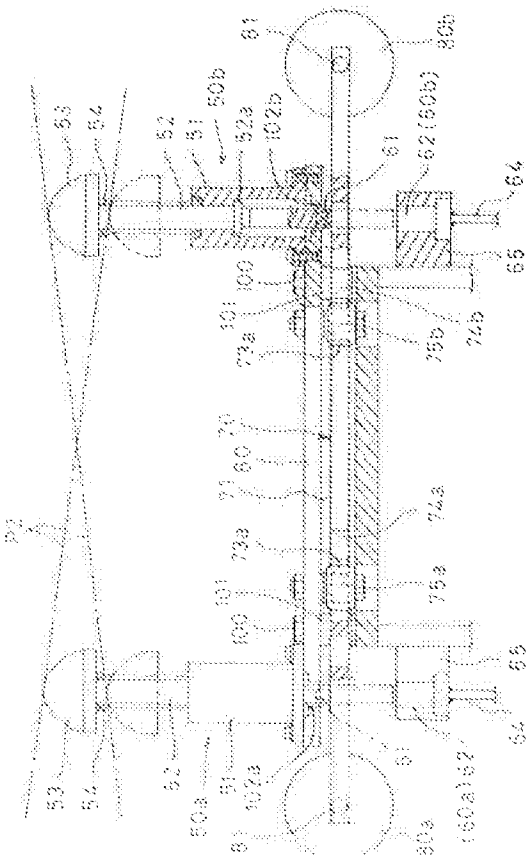

WYBOTICS EX1037
Wybotics v. Zodiac
Page 131

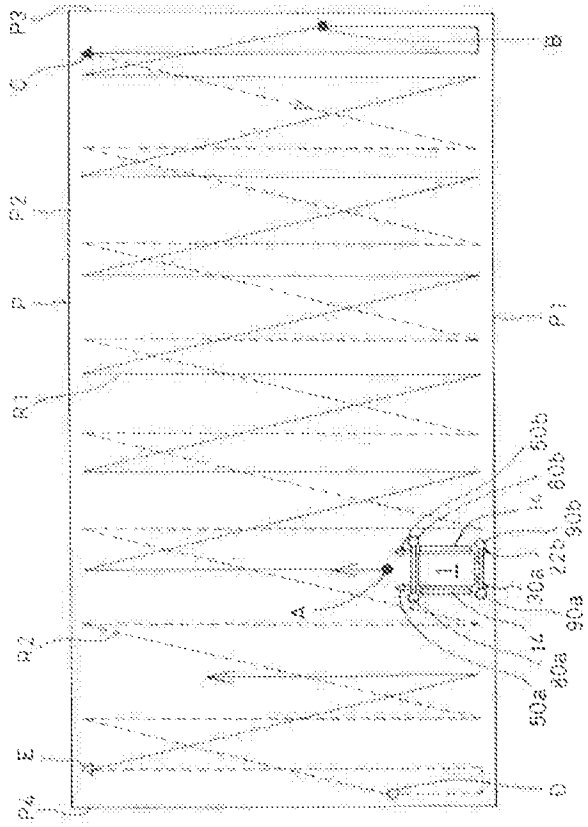

Wipo Translate jaen(beta)
100%

WYBOTICS EX1037
Wybotics v. Zodiac
Page 132

WO2012023676

Sign in

Patents English French

Find prior art Discuss this application

Cleaning robot and underwater sediment cleaning apparatus and method

WO 2012023676 A1

Publication number	WO2012023676 A1
Publication type	Application
Application number	PCT/KR2011/000598
Publication date	Feb 23, 2012
Filing date	Jan 28, 2011
Priority date	Aug 20, 2010
Also published as	EP2605871A1, EP2605871A4, US9074386, US20130151061
Inventors	Young Jin Hong, Jong Geol Kim, Jung Woo Lee, Mun Jik Lee, Jin Ho Suh
Applicant	Pohang Institute Of Intelligent Robotics
Export Citation	BibTeX, EndNote, RefMan

Patent Citations (6), Referenced by (6), Classifications (17), Legal Events (3)

External Links: Patentscope, Espacenet

ABSTRACT

A cleaning robot capable of cleaning a water tank in an unmanned manner and an underwater sediment cleaning apparatus and method are provided. The cleaning robot includes a body put into a water tank, a driver supporting the body and moving the body, a suction part arranged in front of the body and sucking contaminated water containing sediment in the water tank, and a tilting part supported by the body to support the suction part and rotating the suction part on an axis corresponding to the direction across the moving direction of the body.

IMAGES (22)

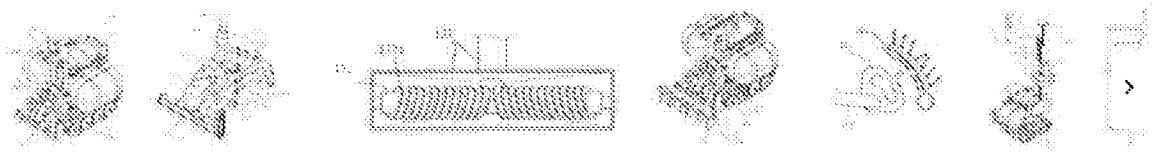

DESCRIPTION

CLEANING ROBOT AND UNDERWATER SEDIMENT CLEANING APPARATUS AND METHOD

The present invention relates to a cleaning robot and an underwater sediment cleaning apparatus and method and, more particularly, to a cleaning robot and an underwater sediment cleaning apparatus and method for cleaning sediment accumulated in a water tank.

Water is used for various industrial facilities and production facilities, and thus there are a water tank reserving water and facilities for administrating the water tank. Since sediment is accumulated in the water tank, the water tank requires to be periodically cleaned in order to manage water quality and prevent equipment using water from being damaged.

A conventional water tank cleaning method includes an operation of discharging water reserved in the water tank, an operation of removing sediment from the water tank and an operation of storing water in the water tank.

The removal operation in the conventional water tank cleaning method is manually performed by operators. Specifically, the removal operation is carried out in such a manner that the operators enter the drained water tank, accumulate sediment using a push rod, a bulldozer, etc., suck the accumulated sediment and discharge the sediment to the outside of the water tank.

The manually performed water tank cleaning method requires a long time for cleaning. Furthermore, it has to stop the operations of facilities using the water of the water tank while the water tank is cleaned. These problems deteriorate production efficiency of industrial facilities or production facilities using the water tank.

Moreover, since the sediment accumulated in the water tank used for the industrial facilities or production facilities contains toxic materials in many cases, the conventional cleaning method may cause safety accidents when the operators entering the water tank are exposed to the toxic materials.

Furthermore, the conventional cleaning method does not recycle drained water to result in waste of water resources.

CLAIMS (36)

1. A cleaning robot comprising:
   a body put into a water tank;
   a driver supporting the body and moving the body;
   a suction part arranged in front of the body and sucking contaminated water containing sediment in the water tank; and
   a tilting part supported by the body to support the suction part and rotating the suction part on an axis corresponding to the direction across the moving direction of the body.

2. The cleaning robot of claim 1, wherein the suction part comprises:
   a suction tube opened to the front of the body;
   a screw arranged in a direction across the suction tube, located at the front of the suction tube and having screw threads fitted to the suction tube; and
   a rotary motor connected to the shaft of the screw to rotate the screw.

3. The cleaning robot of claim 2, further comprising:
   a contaminated water discharge pipe connected with the suction tube to form a path for discharging the contaminated water sucked through the suction tube, and
   a swivel joint provided between the contaminated water discharge pipe and the suction tube.

4. The cleaning robot of claim 3, further comprising:
   a suction pump arranged between the suction tube and the swivel joint, and
   a pump hanger set in the body to elastically support the suction pump.

5. The cleaning robot of claim 1, wherein the tilting part comprises:
   a support supporting the suction part with its front end, being rotatably combined with the body and rotating from the body on a first supporting pin provided in a direction across the moving direction of the body.

WYBOTICS EX1037
Wybotics v. Zodiac
Page 133

A cleaning robot according to an aspect of the present invention comprises a body put into a water tank, a driver supporting the body and moving the body, a suction part arranged in front of the body and sucking contaminated water containing sediment in the water tank, and a tilting part supported by the body to support the suction part and rotating the suction part on an axis corresponding to the direction across the moving direction of the body.

The suction part may comprise a suction tube opened to the front of the body, a screw arranged in a direction to the suction tube, located at the front of the suction tube and having screw threads tilted to the suction tube, and a rotary motor connected to the shaft of the screw to rotate the screw.

The cleaning robot may further comprise a contaminated water discharge pipe connected with the suction tube to form a path for discharging the contaminated water sucked through the suction tube and a swivel joint provided between the contaminated water discharge pipe and the suction tube.

The cleaning robot may further comprise a suction pump arranged between the suction tube and the swivel joint and a pump hanger set in the body to elastically support the suction pump.

The tilting part may comprise a support supporting the suction part with its front end, being rotatably combined with the body and rotating from the body on a first supporting pin provided in a direction across the moving direction of the body, a first link joint having a first end connected to the support through a first link pin, a second link joint having a first end connected to a second end of the first link joint through a second link pin and a second end connected to the body through a second supporting pin, being rotatably combined with the body and rotating on the second supporting pin, and a tilt cylinder having an output terminal connected to the second link pin.

The cleaning robot may further comprise a tilt limit sensing part arranged behind the support to sense the lower limit point and the upper limit point of the support.

The cleaning robot may further comprise a location information sensing part supported by the body and exposed from the surface of water in the water tank.

The location information sensing part may comprise a GPS sensor controller supported by the body and a GPS antenna connected to the GPS sensor controller and located above the GPS sensor controller.

The cleaning robot may further comprise a buoy provided between the body and the GPS sensor controller and floating on the surface of the water in the water tank, and retractable support supporting the GPS sensor controller and the GPS antenna from the body and combined with the buoy, the retractable support having a length increasing or decreasing according to the distance between the body and the buoy.

The cleaning robot may further comprise a balloon connected with the body and a supply pipe connected to the balloon to supply a gas to the balloon.

The cleaning robot may further comprise a neutral buoy provided to the body to maintain neutral buoyancy.

The cleaning robot may further comprise a bumper part installed in front of the suction part.

The bumper part may comprise bumper wheels arranged to roll on an obstruction appearing in front of the body and a supporting frame supporting the bumper wheels.

The supporting frame may be rotatably combined with the body and rotating on an axis corresponding to the direction across the moving direction of the body, and the cleaning robot may further comprise a rotation angle sensing part arranged behind the supporting frame to sense the rotation angle of the supporting frame.

An underwater sediment cleaning apparatus according to another aspect of the present invention comprises a cleaning robot put into a water tank to suck contaminated water containing sediment in the water tank, a sediment separator located outside the water tank, receiving the contaminated water from the cleaning robot, filtering the sediment from the contaminated water and discharging clean water obtained by filtering the sediment from the contaminated water to the water tank, and a controller located outside the water tank and connected to the cleaning robot to control the operation of the cleaning robot.

a first link joint having a first end connected to the support through a first link pin;
a second link joint having a first end connected to a second end of the first link joint through a second link pin and a second end connected to the body through a second supporting pin, being rotatably combined with the body and rotating on the second supporting pin; and
a tilt cylinder having an output terminal connected to the second link pin.

6. The cleaning robot of claim 5, further comprising a tilt limit sensing part arranged behind the support to sense the lower limit point and the upper limit point of the support.

7. The cleaning robot of claim 1, further comprising a location information sensing part supported by the body and exposed from the surface of water in the water tank.

8. The cleaning robot of claim 7, wherein the location information sensing part comprises:
a GPS sensor controller supported by the body; and
a GPS antenna connected to the GPS sensor controller and located above the GPS sensor controller.

9. The cleaning robot of claim 8, further comprising:
a buoy provided between the body and the GPS sensor controller and floating on the surface of the water in the water tank; and
retractable support supporting the GPS sensor controller and the GPS antenna from the body and combined with the buoy, the retractable support having a length increasing or decreasing according to the distance between the body and the buoy.

10. The cleaning robot of claim 1, further comprising:
a balloon connected with the body; and
a supply pipe connected to the balloon to supply a gas to the balloon.

11. The cleaning robot of claim 1, further comprising a neutral buoy provided to the body to maintain neutral buoyancy.

12. The cleaning robot of claim 1, further comprising a bumper part installed in front of the suction part.

13. The cleaning robot of claim 12, wherein the bumper part comprises:
bumper wheels arranged to roll on an obstruction appearing in front of the body; and
a supporting frame supporting the bumper wheels.

14. The cleaning robot of claim 13, wherein the supporting frame is rotatably combined with the body and rotating on an axis corresponding to the direction across the moving direction of the body, further comprising a rotation angle sensing part arranged behind the supporting frame to sense the rotation angle of the supporting frame.

15. An underwater sediment cleaning apparatus comprising:
a cleaning robot put into a water tank to suck contaminated water containing sediment in the water tank;
a sediment separator located outside the water tank, receiving the contaminated water from the cleaning robot, filtering the sediment from the contaminated water and discharging clean water obtained by filtering the sediment from the contaminated water to the water tank; and
a controller located outside the water tank and connected to the cleaning robot to control the operation of the cleaning robot.

WYBOTICS EX1037
Wybotics v. Zodiac
Page 134

The sediment separator may comprise a tank having a first side connected with a contaminated water discharge pipe extended from the cleaning robot, an intake pipe having a first end connected to a second side of the tank and a second end opened to the water tank to allow the clean water to flow into the water tank, and a filter set inside the tank to filter the sediment from the contaminated water flowing to the intake pipe.

The underwater sediment cleaning apparatus may further comprise a sediment discharge pipe having a first end connected to the first side of the tank and a second end opened to the outside of the tank.

The controller may be installed in an operating room which is located outside the water tank and movable.

The controller may comprise a power supply connected to the cleaning robot through a power cable to provide power supplied from an external supply source to the cleaning robot, a communication unit connected to the cleaning robot through a communication cable to transmit/receive data to/from the cleaning robot, and a central processing unit controlling the power supplied to the cleaning robot and processing the data transmitted/received to/from the cleaning robot.

The controller may further comprise a wheel driver controlling the moving operation of the cleaning robot, a screw driver controlling the rotation speed and rotation direction of a screw included in the cleaning robot, a tilt driver controlling the tilting angle of a tilting part included in the cleaning robot, and a pump driver controlling the operation of a suction pump included in the cleaning robot. The wheel driver, the screw driver, the tilt driver and the pump driver may be connected to the central processing unit, and the central processing unit may process control commands generated from wheel driver, the screw driver, the tilt driver and the pump driver.

The controller may further comprise a camera unit controlling an image captured by a camera included in the cleaning robot, a light unit controlling the brightness of a light included in the cleaning robot, a sensor unit controlling a sensing signal generated from sensors included in the cleaning robot, and an automatic cleaning unit receiving location information from the cleaning robot and controlling the location of the cleaning robot. The camera unit, the light unit, the sensor unit and the automatic cleaning unit may be connected to the central processing unit, and the central processing unit may process control commands generated from the camera unit, the light unit, the sensor unit and the automatic cleaning unit.

The underwater sediment cleaning apparatus may further comprise an operation console set in a bag carried by an operator, connected to the controller and allowing the operator to operate the cleaning robot.

The operation console may comprise a camera switch turning on/off the camera included in the cleaning robot, a brightness controller controlling the brightness of the light include in the cleaning robot, a status lamp indicating statuses of the sensors included in the cleaning robot, a display displaying the image captured by the camera, the route of the cleaning robot and the location of the cleaning robot, a mode selection switch for selecting one of a manual cleaning mode and an automatic cleaning mode of the cleaning robot, a screw switch for controlling the rotation speed and rotation direction of the screw included in the cleaning robot, a screw tilt joystick controlling the tilting angle of the screw, a pump switch turning on/off the suction pump included in the cleaning robot, a driving joystick steering the cleaning robot, a speed control switch for controlling the moving speed of the cleaning robot, and an emergency stop switch for stopping the cleaning unit.

The underwater sediment cleaning apparatus may further comprise a generator generating the power supplied to the controller and a compressor connected to a balloon included in the cleaning robot to inject a gas into the balloon.

An underwater sediment cleaning method according to another aspect of the present invention comprises a preparation step of putting a cleaning robot into a water tank and preparing cleaning the water tank, a suction step of sucking contaminated water containing sediment in the water tank by means of the cleaning robot moving in the water tank, a discharging step of discharging the contaminated water to a tank arranged outside the water tank, and filtering step of discharging the sediment contained in the contaminated water to the outside of the tank and making clean water obtained by filtering the sediment from the contaminated water flow into the water tank.

The preparation step may comprise the steps of setting the whole area of the water tank, setting a moving route of the cleaning robot in the whole area of the water tank, controlling the space between neighboring route parts of the moving

16. The underwater sediment cleaning apparatus of claim 15, wherein the sediment separator comprises:
a tank having a first side connected with a contaminated water discharge pipe extended from the cleaning robot,
an intake pipe having a first end connected to a second side of the tank and a second end opened to the water tank to allow the clean water to flow into the water tank; and
a filter set inside the tank to filter the sediment from the contaminated water flowing to the intake pipe.

17. The underwater sediment cleaning apparatus of claim 16, further comprising a sediment discharge pipe having a first end connected to the first side of the tank and a second end opened to the outside of the tank.

18. The underwater sediment cleaning apparatus of claim 15, wherein the controller is installed in an operating room which is located outside the water tank and movable.

19. The underwater sediment cleaning apparatus of claim 15, wherein the controller comprises:
a power supply connected to the cleaning robot through a power cable to provide power supplied from an external supply source to the cleaning robot;
a communication unit connected to the cleaning robot through a communication cable to transmit/receive data to/from the cleaning robot; and
a central processing unit controlling the power supplied to the cleaning robot and processing the data transmitted/received to/from the cleaning robot.

20. The underwater sediment cleaning apparatus of claim 19, wherein the controller further comprises:
a wheel driver controlling the moving operation of the cleaning robot;
a screw driver controlling the rotation speed and rotation direction of a screw included in the cleaning robot;
a tilt driver controlling the tilting angle of a tilting part included in the cleaning robot; and
a pump driver controlling the operation of a suction pump included in the cleaning robot,
wherein the wheel driver, the screw driver, the tilt driver and the pump driver are connected to the central processing unit, and the central processing unit processes control commands generated from wheel driver, the screw driver, the tilt driver and the pump driver.

21. The underwater sediment cleaning apparatus of claim 19, wherein the controller further comprises:
a camera unit controlling an image captured by a camera included in the cleaning robot;
a light unit controlling the brightness of a light included in the cleaning robot;
a sensor unit controlling a sensing signal generated from sensors included in the cleaning robot; and
an automatic cleaning unit receiving location information from the cleaning robot and controlling the location of the cleaning robot,
wherein the camera unit, the light unit, the sensor unit and the automatic cleaning unit are connected to the central processing unit, and the central processing unit processes control commands generated from the camera unit, the light unit, the sensor unit and the automatic cleaning unit.

22. The underwater sediment cleaning apparatus of claim 15, further comprising an operation console set in a bag carried by an operator, connected to the controller and allowing the operator to operate the cleaning robot.

23. The underwater sediment cleaning apparatus of claim 22,

WYBOTICS EX1037
Wybotics v. Zodiac
Page 135

route of the cleaning robot to set a degree of precision of cleaning the water tank, and selecting one of the automatic cleaning mode and the manual cleaning mode.

An automatic cleaning operation according to selection of the automatic cleaning mode may comprise a control step of receiving location information from the cleaning robot and controlling the location of the cleaning robot, a moving step of moving the cleaning robot along the route, a target point arrival determination unit of determining whether the cleaning robot arrives at a target point, and a cleaning completion determination step of determining whether the cleaning robot reaches a final target point.

The control step may comprise the steps of receiving first location information from a GPS sensor included in the cleaning robot and acquiring second location information from a encoder included in the cleaning robot, applying the first location information and the second location information to extended Kalman filter to correct the current location of the cleaning robot, calculating a target point which has to be tracked by the cleaning robot from the current location of the cleaning robot, calculating a difference between the current location of the cleaning robot and the target point, and calculating speed values of left and right wheels of the cleaning robot based on the calculated difference.

When the cleaning robot does not reach the target point in the target point arrival determination step, the cleaning method may further comprise calculating the current load of the cleaning robot and comparing the current load of the cleaning robot with an optimal load of the cleaning robot to detect the load of the cleaning robot.

The optimal load of the cleaning robot may be calculated based on the current consumed by the cleaning robot, the speed of the wheels revolving when the cleaning robot is driven and a variation in the location of the cleaning robot.

A detour of the cleaning robot is generated when the current load of the cleaning robot exceeds the optimal load.

The operation of generating the detour of the cleaning robot may comprise the steps of detecting a target point at which the cleaning robot cannot arrive from the current location, removing the detected target point from the route of the cleaning robot, generating new target point candidates at which the cleaning robot can arrive from the current location, and selecting a new target point from the generated new target point candidates.

A moving route of the cleaning robot may be secured when the current load of the cleaning robot is less than the optimal load.

The operation of securing the moving route of the cleaning robot may comprise the steps of moving the cleaning robot forward and moving the cleaning robot backward to return the cleaning robot to the position before being moved forward, and the step of moving the cleaning robot forward and the step of returning the cleaning robot may be repeated for a predetermined operating time.

When the cleaning robot cannot be moved forward, the cleaning method may further comprise the steps of moving the cleaning robot forward while turning the cleaning robot left or right and moving the cleaning robot backward to return the cleaning robot to the position before being moved forward, and the step of moving the cleaning robot forward and the step of returning the cleaning robot may be repeated for a predetermined operating time.

When the cleaning robot cannot be turned left or right or moved forward, the cleaning method may further comprise the step of moving the cleaning robot backward to a position behind the position before being moved forward, and the step of moving the cleaning robot forward and the step of moving the cleaning robot backward may be repeated for the predetermined operating time.

The cleaning robot and underwater sediment cleaning apparatus and method according to the present invention can protect operators from exposure to toxic materials contained in sediment accumulated in the water tank so as to prevent accidents from happening.

Furthermore, the cleaning robot and underwater sediment cleaning apparatus and method according to the present invention can allow the water tank to be used even when the water tank is being cleaned, and thus water tank utilization efficiency can be improved.

wherein the operation console comprises:
a camera switch turning on/off the camera included in the cleaning robot;
a brightness controller controlling the brightness of the light include in the cleaning robot;
a status lamp indicating statuses of the sensors included in the cleaning robot;
a display displaying the image captured by the camera, the route of the cleaning robot and the location of the cleaning robot;
a mode selection switch for selecting one of a manual cleaning mode and an automatic cleaning mode of the cleaning robot;
a screw switch for controlling the rotation speed and rotation direction of the screw included in the cleaning robot,
a screw tilt joystick controlling the tilting angle of the screw,
a pump switch turning on/off the suction pump included in the cleaning robot;
a driving joystick steering the cleaning robot;
a speed control switch for controlling the moving speed of the cleaning robot; and
an emergency stop switch for stopping the cleaning unit.

24. The underwater sediment cleaning apparatus of claim of claim 15, further comprising:
a generator generating the power supplied to the controller; and
a compressor connected to a balloon included in the cleaning robot to inject a gas into the balloon.

25. An underwater sediment cleaning method, comprising:
a preparation step of putting a cleaning robot into a water tank and preparing cleaning the water tank;
a suction step of sucking contaminated water containing sediment in the water tank by means of the cleaning robot moving in the water tank,
a discharging step of discharging the contaminated water to a tank arranged outside the water tank; and
filtering step of discharging the sediment contained in the contaminated water to the outside of the tank and making clean water obtained by filtering the sediment from the contaminated water flow into the water tank.

26. The underwater sediment cleaning method of claim 25, wherein the preparation step comprises the steps of:
setting the whole area of the water tank;
setting a moving route of the cleaning robot in the whole area of the water tank,
controlling the space between neighboring route parts of the moving route of the cleaning robot to set a degree of precision of cleaning the water tank; and
selecting one of the automatic cleaning mode and the manual cleaning mode.

27. The underwater sediment cleaning method of claim 26, wherein an automatic cleaning operation according to selection of the automatic cleaning mode comprises:
a control step of receiving location information from the cleaning robot and controlling the location of the cleaning robot;
a moving step of moving the cleaning robot along the route,
a target point arrival determination unit of determining whether the cleaning robot arrives at a target point; and
a cleaning completion determination step of determining whether the cleaning robot reaches a final target point.

28. The underwater sediment cleaning method of claim 27, wherein the control step comprises the steps of:
receiving first location information from a GPS sensor included in the cleaning robot and acquiring second location information from a encoder included in the cleaning robot,
applying the first location information and the second location information to extended Kalman filter to correct the current location of the cleaning robot;

WYBOTICS EX1037
Wybotics v. Zodiac
Page 136

Moreover, the cleaning robot and underwater sediment cleaning apparatus and method according to the present invention can filter contaminated water to generate clean water to thereby save water resources.

The accompanying drawings, which are included to provide a further understanding of the invention and are incorporated in and constitute a part of this application, illustrate embodiment(s) of the invention and together with the description serve to explain the principle of the invention. In the drawings:

FIG. 1 is a perspective view of a cleaning robot according to an embodiment of the present invention;

FIG. 2 is a perspective view of part of the cleaning robot shown in FIG. 1;

FIG. 3 is a bottom view of part of a suction part of the cleaning robot shown in FIG. 1;

FIG. 4 is a perspective view of the cleaning robot with a bumper part according to an embodiment of the present invention;

FIG. 5 is a side view roughly showing a rotation angle sensing part of the cleaning robot shown in FIG. 1;

FIG. 6 is a perspective view of the cleaning robot including a location information sensing part and a retractable support according to an embodiment of the present invention;

FIG. 7 is a block diagram of an underwater sediment cleaning apparatus according to an embodiment of the present invention;

FIG. 8 is a perspective view of a sediment separator of the underwater sediment cleaning apparatus shown in FIG. 7;

FIG. 9 is a block diagram showing connections among the cleaning robot, a controller and an operation console of the cleaning apparatus according to an embodiment of the present invention;

FIG. 10 is a front view showing the exterior of the controller of the underwater sediment cleaning apparatus according to an embodiment of the present invention;

FIG. 11 illustrates the exterior of the operation console of the underwater sediment cleaning apparatus according to an embodiment of the present invention;

FIG. 12 is a flowchart showing an underwater sediment cleaning method;

FIG. 13a is a flowchart showing a preparation step in the underwater sediment cleaning method shown in FIG. 12;

FIGS. 13b, 13c, 13d and 13e are plan views showing coordinates, routes and the space between neighboring route parts, which are set based on the shape of the bottom of a water tank in the underwater sediment cleaning method shown in FIG. 12;

FIG. 14 is a flowchart showing a cleaning method according to an automatic cleaning mode according to an embodiment of the present invention;

FIG. 15 is a flowchart showing a control step in the cleaning method according to the automatic cleaning mode, shown in FIG. 14;

FIG. 16 is a flowchart showing an operation of generating a detour of the cleaning robot in the cleaning method according to the automatic cleaning mode, shown in FIG. 14;

FIG. 17 is a view for explaining an algorithm of generating the detour of the cleaning robot in the cleaning method according to the automatic cleaning mode, shown in FIG. 14; and

FIG. 18 is a flowchart showing an operation of securing a moving route of the cleaning robot when the cleaning robot is moved according to the automatic cleaning mode in the underwater sediment cleaning method according to the present invention.

Hereinafter, an embodiment of the present invention will be described below with reference to the accompanying drawings.

FIG. 1 is a perspective view of a cleaning robot 100 according to an embodiment of the present invention.

calculating a target point which has to be tracked by the cleaning robot from the current location of the cleaning robot;
calculating a difference between the current location of the cleaning robot and the target point; and
calculating speed values of left and right wheels of the cleaning robot based on the calculated difference.

29. The underwater sediment cleaning method of claim 27, when the cleaning robot does not reach the target point in the target point arrival determination step, further comprising:
calculating the current load of the cleaning robot; and
comparing the current load of the cleaning robot with an optimal load of the cleaning robot to detect the load of the cleaning robot.

30. The underwater sediment cleaning method of claim 29, wherein the optimal load of the cleaning robot is calculated based on the current consumed by the cleaning robot, the speed of the wheels revolving when the cleaning robot is driven and a variation in the location of the cleaning robot.

31. The underwater sediment cleaning method of claim 29, wherein a detour of the cleaning robot is generated when the current load of the cleaning robot exceeds the optimal load.

32. The underwater sediment cleaning method of claim 31, wherein the operation of generating the detour of the cleaning robot comprises the steps of:
detecting a target point at which the cleaning robot cannot arrive from the current location;
removing the detected target point from the route of the cleaning robot;
generating new target point candidates at which the cleaning robot can arrive from the current location; and
selecting a new target point from the generated new target point candidates.

33. The underwater sediment cleaning method of claim 29, wherein a moving route of the cleaning robot is secured when the current load of the cleaning robot is less than the optimal load.

34. The underwater sediment cleaning method of claim 33, wherein the operation of securing the moving route of the cleaning robot comprising the steps of:
moving the cleaning robot forward; and
moving the cleaning robot backward to return the cleaning robot to the position before being moved forward, the step of moving the cleaning robot forward and the step of returning the cleaning robot are repeated for a predetermined operating time.

35. The underwater sediment cleaning method of claim 34, when the cleaning robot cannot be moved forward, further comprising the steps of:
moving the cleaning robot forward while turning the cleaning robot left or right; and
moving the cleaning robot backward to return the cleaning robot to the position before being moved forward, the step of moving the cleaning robot forward and the step of returning the cleaning robot are repeated for a predetermined operating time.

36. The underwater sediment cleaning method of claim 35, when the cleaning robot cannot be turned left or right or moved forward, further comprising the step of moving the cleaning robot backward to a position behind the position before being moved forward, the step of moving the cleaning robot forward and the step of moving the cleaning robot backward are repeated for the predetermined operating time.

WYBOTICS EX1037
Wybotics v. Zodiac
Page 137

Referring to FIG. 1, the cleaning robot 100 includes a body 110, a driver 120, a suction part 130, and a tilting part 140.

The driver 120 supports and drives the body 110 and includes a caterpillar 121 and a plurality of wheels 122.

The caterpillar 121 allows the body 110 to show excellent running performance even in a poor operating environment such as the bottom of a water tank, which has an uneven surface or is covered with mud. The shoes of the caterpillar 121 may be made of one of reinforced plastic, urethane and stainless steel and a component such as spikes can be additionally attached to the caterpillar 121.

The caterpillar 121 generally uses shoes made of reinforced plastics. If the bottom of the water tank is formed of synthetic resin such as a tarpaulin or rubber, the caterpillar 121 can use urethane shoes in order to minimize damage of the bottom of the water tank. When the bottom of the water tank is covered with mud, the caterpillar 121 can use stainless steel shoes to secure the running performance of the body 110 and additionally use spikes attached to the shoes.

The plurality of wheels 122 support the caterpillar 121. The wheels 122 maintain the grip of the caterpillar 121 even when the caterpillar 121 runs on the uneven surface of the bottom of the water tank. The wheels 122 are configured to absorb shock transferred from the uneven surface of the bottom of the water tank and buffer the load of the body 110. That is, suspensions (not shown) are respectively provided to shafts of the wheels 122 and urethane having adjusted hardness can be molded and used for the shafts.

The suction part 130 is arranged in front of the body 110 to suck contaminated water containing sediment in the water tank.

FIG. 2 is a perspective view of part of the cleaning robot shown in FIG. 1 and FIG. 3 is a bottom view of part of the suction part 130 of the cleaning robot 100 shown in FIG. 1.

Referring to FIGS. 2 and 3, the suction part 130 includes a suction tube 131, a screw 132 and a rotary motor 133. The suction tube 131 may be configured such that one end thereof is opened to the front of the body 110 and the other end is formed in a shape that comes into closely contact with the bottom of the water tank and is extended to a direction to the moving direction of the body 110 to scrape sediment accumulated on the bottom of the water tank as the body 110 moves. In an alternative embodiment, one end of the suction tube 131 may be combined with a separate scraper opened to a direction across the moving direction of the body 110.

The screw 132 is arranged in a direction to the suction tube 131 at the front of the body 110. The screw 132 has screw threads 132a arranged at both sides of the suction tube 131 and tilted to the suction tube 131. The screw threads 132a crush the sediment accumulated on the bottom of the water tank such that the sediment can be smoothly sucked through the suction tube 131.

The screw 132 can be made of stainless steel when the sediment is not easily scraped off the bottom of the water tank due to its high viscosity and a brush made of nylon or urethane can be used to remove the sediment when the sediment is easily scraped off the bottom of the water tank due to its low viscosity.

The rotary motor 133 is connected to the screw 132 through a power transmission means such as a chain, a timing belt or the like. The rotary motor 133 rotates the screw 132 forward such that sediment dispersed to both sides of the suction tube 131 can be accumulated before the suction tube 131. On the contrary, the rotary motor 133 rotates the screw 132 reversely such that particles which are located in front of the suction tube 131 and obstructed suction of the sediment can be moved to the outside of the screw 132.

The tilting part 140 supports the suction part 130 against the body 110 and rotates the suction part 130 on an axis corresponding to a direction across the moving direction of the body 110. The tilting part 140 includes a support 141, a first link joint 142, a second link joint 143, and a tilt cylinder 144.

The support 141 supports the suction part 130 with its front end. The support 141 is rotatably combined with the body 110 and rotates on a first supporting pin 141a provided in a direction across the moving direction of the body 110.

One end of the first link joint 142 is connected to the support 141 by means of a first link pin 142a and one end of the second link joint 143 is connected to the other end of the first link joint 142 by means of a second link pin 142b. The other end of the second link joint 143 is connected to the body 110 through a second supporting pin 143a. The second link joint 143 is rotatably combined with the body 110 and rotates on the second supporting pin 143a. The tilt cylinder 144 has an output terminal connected to the second link pin 142b. The tilt cylinder 144 moves the second link pin 142b forward and backward such that the suction part 130 supported by the support 141 can rotate on the first supporting pin 141a.

The tilting part 140 controls a sediment suction rate. That is, the tilting part 140 can increase the suction rate by narrowing the distance between the bottom of the water tank and the suction part 130 and decrease the suction rate by widening the distance between the bottom of the water tank and the suction part 130.

Here, a tilt limit sensing part 150 that senses the upper limit and lower limit of the support 141 is arranged behind the support 141 to prevent the suction part 130 from excessively tilting. The tilt limit sensing part 150 includes a tilt loader 151 combined with the back end of the support 141 and tilted with the support 141, a lower limit sensor 152 located above the tilt loader 151, and an upper limit sensor 153 arranged under the tilt loader 151.

The tilt limit sensing part 150 can sense the lower limit point and the upper limit point of the support 141 to prevent the suction part 130 from excessively tilting.

Meanwhile, the cleaning robot 100 includes a suction pump 161, a pump hanger 162, a contaminated water discharge pipe 163, and a swivel joint 164.

The suction pump 161 is placed on the body 110 and connected to the other end of the suction tube 131. The suction pump

WYBOTICS EX1037
Wybotics v. Zodiac
Page 138

161 sucks the sediment accumulated before the suction tube 131 through the suction tube 131.

The pump hanger 162 hangs the suction pump 161 on the body 110 such that the suction pump 161 is supported by the body 110. An elastic member such as rubber, coil spring or the like may be provided to the connecting portion of the pump hanger 162 and the body 110. The elastic member prevents shock caused by vibrations generated from the operation of the suction pump 161 and moving of the body 110 from being transferred to the body 110 and the suction pump 161.

The contaminated water discharge pipe 163 has a first end connected with the suction tube 131 and a second end extended to the outside of the water tank. The contaminated water discharge pipe 163 forms a contaminated water discharge route through which contaminated water sucked through the suction tube 131 can be discharged to the outside of the water tank.

The swivel joint 164 is provided between the suction tube 131 and the contaminated water discharge pipe 163. The swivel joint 164 prevents the contaminated water discharge pipe 163 from turning along the suction tube 131 when the body 110 moves, particularly, when the body 110 turns, and thus the contaminated water discharge pipe 163 is not twisted.

As described above, the suction pump 161 is hung on the pump hanger 162 and combined with the body 110. In an alternative embodiment, the suction pump 161 may be located outside the water tank and connected to the contaminated water discharge pipe 163, which is not shown.

The cleaning robot 100 includes a balloon 165 and a supply pipe 165a, shown in FIG. 1, as means for floating the body 110 located inside the water tank on the surface of the water in the water tank.

Referring back to FIG. 1, the balloon 165 is connected with the body 110. The supply pipe 165a has a first end connected to the balloon 165 and a second end connected to a compressor 501 located outside the water tank, shown in FIG. 7, which will be explained later, to form a passage for supplying a gas to the balloon 165. The balloon 165 makes the cleaning robot 100 float on the surface of the water in the water tank when the cleaning robot 100 is difficult to move in the water or wrongly operates.

Here, the number and volume of balloons can be adjusted based on the weight of the cleaning robot 100. Furthermore, a neutral buoy 166 that maintains neutral buoyancy in the cleaning robot 100 when the cleaning robot 100 cannot float may be additionally provided to the body 110.

In addition, the supply pipe 165a may be placed with a power cable and a communication cable, which will be described later, in a single cable and connected to the cleaning robot 100. The supply pipe 165a may be come out of the cable in the body 110 and connected to the balloon 165.

The cleaning robot 100 may include a bumper part 170 provided in front of the body 110.

FIG. 4 is a perspective view of the cleaning robot with the bumper part 170 according to an embodiment of the present invention.

Referring to FIG. 4, the bumper part 170 includes a supporting frame 171 and bumper wheels 172. The supporting frame 171 supports the bumper wheels 172 and a elevating wheel 181 which will be explained later. The supporting frame 171 rotates on an axis corresponding to a direction across the moving direction of the body 110.

The bumper wheels 172 are provided to be supported by the supporting frame 171 to roll in contact with obstructions appearing in front of the body 110. The bumper wheels 172 are arranged in a direction across the moving direction of the body 110. The bumper wheels 172 are provided such that the outermost bumper wheels are located outside the front corners of the body 110.

The bumper wheels 172 absorb shock generated when the cleaning robot 100 moving in the water tank collides with obstructions such as the inner walls of the water tank and a structure installed in the water tank and prevent the inner walls of the water tank, the structure in the water tank and the cleaning robot 100 from being damaged. To complement the shock-absorbing force of the bumper wheels 172, an elastic member such as a coil spring or rubber may be provided to shafts of the bumper wheels 172.

The cleaning robot 100 can detect the height of the sediment on the bottom of the water tank based on the rotation angle of the supporting frame 171 to estimate the quantity of the sediment. Specifically, the cleaning robot 100 can estimate that there is a small quantity of sediment when the rotation angle of the supporting frame 171 is narrow and estimate that there is a large quantity of sediment when the rotation angle of the supporting frame 171 is wide. Accordingly, the cleaning robot 100 may include a rotation angle sensing part 180 for sensing the rotation angle of the supporting frame 171.

FIG. 5 is a side view roughly showing the rotation angle sensing part of the cleaning robot 100.

Referring to FIG. 5, the rotation angle sensing part 180 includes an elevating wheel 181, a rotary loader 182 and a plurality of rotation angle sensors 183.

The elevating wheel 181 is supported by the supporting frame 171 to roll in contact with the bottom of the water tank. As described above, the supporting frame 171 is installed such that it can rotate on the axis corresponding to the direction across the moving direction of the body 110, and thus the elevating wheel 181 rolls on the bottom of the water tank and moves up and down according to the height of the sediment in the water tank. The rotary loader 182 is combined with the back end of the supporting frame 171 and rotates with the supporting frame 171. The rotation angle sensors 183are arranged behind the rotary loader 182and sense the rotation angle of the supporting frame 171.

The rotation angle sensing part 180 can estimate the quantity of the sediment in the water tank based on the height of the sediment by sensing the rotation angle of the supporting frame 171. The estimated quantity is used to control the tilting angle of the suction part 130 according to the tilting part 140, the power of the suction pump 161, the moving direction of the body 110 and whether the water tank cleaning operation continues.

WYBOTICS EX1037
Wybotics v. Zodiac
Page 139

Referring back to FIG. 1, the cleaning robot 100 includes a camera 168 and a light 167 installed in front of the body 110.

The camera 168 photographs the cleaning operation of the cleaning robot 100, the environment where the cleaning robot 100 operates, the overall operating state of the cleaning robot 100, etc. The camera 168 may be constructed in such a manner that a pan/tilt camera is set in a globular waterproof case.

The light 167 may use one of a high intensity discharge (HID) lamp, tungsten halogen lamp and a light emitting diode (LED).

The cleaning robot 100 is configured such that it can be aware of the location thereof.

FIG. 6 is a perspective view of the cleaning robot with a location information sensing part 190, a buoy 193 and a retractable support 194 according to an embodiment of the present invention.

Referring to FIG. 6, the cleaning robot 100 includes the location information sensing part 190, the buoy 193 and the retractable support 194.

The location information sensing part 190 senses the location of the body 110 in the water tank and includes a global positioning system (GPS) sensor 191 and a GPS antenna 192. The GPS sensor 191 is supported by the retractable support 194 and the GPS antenna 192 is pulled out of the GPS sensor 191 and set up on the GPS sensor 191. Here, the GPS sensor 191 can use a deep GPS (DGPS) sensor having an error range of several dozen meters although it can use a general GPS sensor having an error range of several meters.

The buoy 193 is located under the GPS sensor 191 and combined with the retractable support 194. The buoy 193 makes the GPS sensor 191 float on the surface of the water in the water tank all the time.

The retractable support 194 includes a combining rod 194a, elevating rods 194b and rollers 194c. The combining rod 194a is combined with the body 110. The elevating rods 194b are connected with the combining rod 194a and combined with the buoy 193 and the GPS sensor 191 to be elevated from the combining rod 194a according to the level of the water in the water tank. The number of the elevating rods 194b may be increased or decreased. The rollers 194c are provided between the combining rod 194a and the elevating rods 194b and between the elevating rods 194b and roll to support the elevating rods 194b.

Furthermore, the cleaning robot 100 can estimate its moving range based on the number of revolutions, transmitted from an encoder mounted on a wheel motor 122a (refer to FIG. 6) for driving the wheels 122.

An underwater sediment cleaning apparatus using the aforementioned cleaning robot according to embodiments of the present invention will now be explained with reference to the attached drawings.

FIG. 7 is a block diagram of the underwater sediment cleaning apparatus 500 according to the present embodiment and FIG. 8 is a perspective view of a sediment separator 200 of the underwater sediment cleaning apparatus 500 shown in FIG. 7.

Referring to FIGS. 7 and 8, the underwater sediment cleaning apparatus 500 includes the cleaning robot 100, the sediment separator 200, a controller 300 and an operation console 400.

The contaminated water discharge pipe 163 connected to the cleaning robot 100 is extended to the sediment separator 200.

The sediment separator 200 separates sediment from the contaminated water sucked from the cleaning robot 100 and includes a tank 210, a sediment discharge pipe 220, an intake pipe 230 and a filter 240. The tank 210 is located outside the water tank and the contaminated discharge pipe 163 is connected to an upper portion of one side of the tank 210. The sediment discharge pipe 220 is connected to a lower portion of one side of the tank 210. The sediment discharge pipe 220 is connected to a vacuum car located outside the tank 210 to form a route for discharging sediment filtered by the filter 240 and left in the tank 210. The intake pipe 230 is connected to the other side of the tank 210 and extended to the water tank 10. The intake pipe 230 has a valve 231 which controls the flow rate of clean water obtained by filtering the sediment of the contaminated water using the filter 240.

The filter 240 is provided between one side and the other side of the tank 210 and filters the sediment from contaminated water.

An operating room 20 is arranged outside the water tank 10. The operating room 20 may use a container box such to be movable. The controller 300 for controlling the cleaning robot 100 is installed in the operating room 20. The operating room 20 may have the controller 300, a generator 502 for providing power to the cleaning robot 100 and a compressor 501, which are installed therein.

FIG. 9 is a block diagram showing connections of the cleaning robot 100, the controller 300 and the operation console 400 of the underwater sediment cleaning apparatus according to the present embodiment.

Referring to FIG. 9, the controller 300 includes a power supply 310, a communication unit 320 and a central processing unit 330. The power supply 310 and the communication unit 320 are connected to the cleaning robot 100 and the central processing unit 330 through the power cable and the communication cable. The power supply 310 can supply power generated from the generator 502 shown in FIG. 7. Otherwise, the power supply 310 may use power provided by an external power supply source.

Furthermore, the controller 300 includes a wheel driver 341, a screw driver 342, a pump driver 343, and a tilt driver 344. The wheel driver 341 is connected to the driver 120 of the cleaning robot 100 through the central processing unit 330 and controls the operation of the cleaning robot 100. The screw driver 342 is connected to the motor 133 of the cleaning robot 100 through the central processing unit 330 and controls the rotation speed and rotation direction of the screw 132. The tilt driver 344 is connected to the tilt cylinder 144 of the cleaning robot 100 through the central processing unit 330 and controls

WYBOTICS EX1037
Wybotics v. Zodiac
Page 140

the tilting angle of the suction part 130. The pump driver 343 is connected to the suction pump 161 of the cleaning robot 100 through the central processing unit 330 and controls the operation of the suction pump 161 through the central processing unit 330.

In addition, the controller 300 includes a camera unit 351, a lighting unit 352, a sensor unit 353 and an automatic cleaning unit 354. The camera unit 351 is connected to the camera 168 of the cleaning robot 100 through the central processing unit 330, processes images captured by the camera 168 and displays the processed images. The lighting unit 352 is connected to the light 167 of the cleaning robot 100 through the central processing unit 330 and controls the brightness of the light 167. The sensor unit 353 is connected to the tilt limit sensing part 150 and the rotation angle sensing part 180 of the cleaning robot 100 through the central processing unit 330 and processes sensing signals generated from sensors included in the tilt limit sensing part 150 and the rotation angle sensing part 180.

The automatic cleaning unit 354 is connected to the cleaning robot 100 through the central processing unit 330 analyzes the location of the cleaning robot 100 and controls the cleaning robot 100 to move along a predetermined route. The automatic cleaning unit 354 may use an industrial computer. The automatic cleaning unit 354 has a touch screen which displays the location of the cleaning robot 100 and a cleaning area.

As described above, the central processing unit 330 is connected to the drivers 341,342,343 and 344 and the units 351, 352, 353 and 354 and linked to the cleaning robot 100 through the power supply 310 and the communication unit 320. The central processing unit 330 controls the power supplied to the cleaning robot 100 and processes data transmitted between the cleaning robot 100 and other components of the cleaning apparatus. Furthermore, the central processing unit 330 processes control commands of the drivers 341, 342, 343 and 344 and the units 351, 352, 353 and 354.

FIG. 10 is a front view of the exterior of the controller of the underwater sediment cleaning apparatus according to the present embodiment.

Referring to FIG. 10, the controller 300 includes an input connector 361, an output connector 362, a control connector 363 and a pneumatic connector 364. The input connector 361 is connected to an input cable extended to be provided with power supplied from the generator 502 or the external power supply source. The output connector 362 is connected to an output cable coupled to the cleaning robot 100. The control connector 363 is connected to the cleaning robot 100 to be coupled to a communication cable through which data is transmitted/received between the cleaning robot 100 and other components of the cleaning apparatus. The pneumatic connector 364 is connected to the balloon 165 and the supply pipe 165a supplying a gas to the balloon 165.

Moreover, the controller 300 includes an operation console connector 400a, a plurality of output plugs 365, a LAN port 366, and an image output port 367. The operation console connector 400a connects the operation console 400and the controller 300. The operation console connector 400a allows the power supplied to the controller 300 to be provided to the operation console 400 and permits the controller 300 and the operation console 400 to transmit/receive data to/from each other. There may be a plurality of operation console connectors 400a to connect a plurality of operation consoles to the controller 300.

The output plugs 365 provide power to a terminal, a portable device, etc. other than the operation console 400 using the power supplied to the controller 300. The LAN port 366 allows the terminal, portable device, etc. and the controller 300 to exchange data. The image output port 367 transmits an image signal corresponding to an image photographed by the camera 168 to the operation console 400 such that a display 414 provided to the operation console 400 displays the image.

In addition, the controller 300 includes an input power switch 368, an input power state lamp 369, an output power state lamp 370, an operation stand-by state lamp 371, a warning buzzer 372, a first emergency stop switch 373, a reset button 374, an automatic cleaning unit power switch 375, and a first brightness control switch 376.

The input power switch 368 allows input power applied to a power connector to be supplied to the controller 300 and the cleaning robot 100. The input power state lamp 369 indicates whether or not the input power supplied to the controller 300 is normal. If the cleaning apparatus performs an underwater cleaning work outdoors, the input power may have input current lower than the current used by the controller 300. On the contrary, the input power may have input current higher than the current used by the controller 300. That is, when the input power becomes abnormal, the input power state lamp 369 blinks to warn that the input power is abnormal. The output power state lamp 370 indicates whether or not the power supplied to the cleaning robot 100 is normal. The power cable connected to the cleaning robot 100 may be down due to its abnormal state or excessive current cause by electric leakage or overload may flows. When the output power becomes abnormal, as described, the output power state lamp 370 blinks to warn that the output power state is abnormal. The operation stand-by state lamp 371 indicates that power is supplied to the controller 300 and all of components are ready to operate so that the cleaning robot 100 can be operated. The warning buzzer 372 generates alarm sound when a wrong operation occurs during operator's absence to inform the operator to know the wrong operation. The first emergency stop switch 373 is used to stop the operation of the controller 300 and make the controller 300 to cut power. The reset button 374 is used to reset the cleaning apparatus when the cleaning apparatus cannot normally operate due to overload applied to the controller 300 or the cleaning robot 100 or other unknown causes. The reset button 374 blinks a warning light when the cleaning apparatus cannot normally operate. The automatic cleaning unit power switch 375 is used to select an automatic cleaning mode or a manual cleaning mode. The user can select the manual cleaning mode by turning the automatic cleaning unit power switch 375 to 'manual cleaning mode' and select the automatic cleaning mode by turning the automatic cleaning unit power switch 375 to 'automatic cleaning mode'. When the automatic cleaning mode is selected, the automatic cleaning unit 354 starts to operate (for example, activate GPS unit and activates related software).

The first brightness control switch 376 is configured in the form of a rotary switch and controls the brightness of the light 167 included in the cleaning robot 100.

Referring back to FIG. 7, the operation console 400 is connected to the controller 300 and used for the operator to manually operate the cleaning robot 100. The operation console 400 may be provided in the form of a bag such that the

WYBOTICS EX1037
Wybotics v. Zodiac
Page 141

operator can easily carry the operation console 400.

FIG. 11 illustrates the exterior of the operation console of the underwater sediment cleaning apparatus according to the present embodiment.

Referring to FIGS. 8 and 11, the operation console 400 includes a camera switch 411, a second brightness control switch 412, a status lamp 413 and the display 414. The camera switch 411 is connected to the camera unit 351. The camera switch 411 is used to turn on/off the camera 168 included in the cleaning robot 100. The second brightness control switch 412 is connected to the lighting unit 352 and controls the brightness of underwater light. The status lamp 413 is connected to the sensor unit 353 and indicates statuses of the sensors included in the tilt limit sensing part 150 and the rotation angle sensing part 180 of the cleaning robot 100. The display 414 is connected to the camera unit 351, the sensor unit 353 and the automatic cleaning unit 354 and displays an image photographed by the camera 168, signals sensed by the sensors include in the tilt limit sensing part 150 and the rotation angle sensing part 180, the route of the cleaning robot 100, and the current location of the cleaning robot 100.

In addition, the operation console 400 includes a mode selection switch 415, a screw switch 416, a pump switch 417, a driving joystick 419, a screw tilt joystick 418, a speed control switch 420, and a second emergency stop switch 421 The mode selection switch 415, the screw switch 416, the pump switch 417, the driving joystick 419, the screw tilt joystick 418, the speed control switch 420 and the second emergency stop switch 421 are connected to the central processing unit 330.

The mode selection switch 415 is used to select one of the manual cleaning mode and the automatic cleaning mode of the cleaning robot 100. The screw switch 416 is used to control the rotation direction and rotation speed of the screw 132. The pump switch 417 used to turn on/off the suction pump 161. The driving joystick 419 is used to steer the cleaning robot 100. The speed control switch 420 is used to control the moving speed of the cleaning robot 100. The second emergency stop switch 421 is used to stop the operation of the cleaning robot 100 when the cleaning robot 100 performs a wrong operation.

An underwater sediment cleaning method according to an embodiment of the present invention will now be explained.

FIG. 12 is a flowchart showing the underwater sediment cleaning method according to an embodiment of the present invention.

Referring to FIG. 12, the underwater sediment cleaning method includes a preparation step S100, a suction step S200, a discharging step S300 and a filtering step S400.

The cleaning robot 100 is put into the water tank to prepare an underwater cleaning operation in the preparation step S100. The cleaning robot 100 sucks contaminated water containing sediment while moving in the water tank in the suction step S200. The contaminated water sucked by the cleaning robot 100 is discharged to the outside of the water tank in the discharging step S300. The sediment in the contaminated water is filtered and clean water flows into the water tank in the filtering step S400.

FIG. 13a is a flowchart showing the preparation step S100 in the underwater sediment cleaning method shown in FIG. 1 and FIGS. 13b, 13c, 13d and 13e are plan views showing coordinates, routes and the space between neighboring route parts which are set based on the shape of the bottom of the water tank and used for the underwater sediment cleaning method shown in FIG. 12.

Referring to FIGS. 13a through 13e, the preparation step S100 includes an area setting step S110, a route setting step S120, a precision setting step S130 and a mode selection step S140.

An area which will be cleaned by the cleaning robot 100 is set in the area setting step S110. In the area setting step S110, coordinates P1, P2, P3, ..., Pn based on the shape of the bottom of the water tank 10 are set. If the bottom of the water tank 10 has a polygonal shape, for example, coordinates P1, P2, P3, ..., Pn corresponding to corners of the bottom of the water tank 10 can be set. If the bottom of the water tank 10 has a circular shape, coordinates P1, P2, P3, ..., Pn corresponding to the edge of the bottom of the water tank 10 can be set.

The moving route of the cleaning robot 100 is set in the route setting step S120. In this step, the route of the cleaning robot 100 may be set based on the shape of the bottom of the water tank 10. If the bottom of the water tank 10 has a polygonal shape, for example, a zigzag route can be set. If the bottom of the water tank 10 has a circular shape, a spiral route can be set.

The space between neighboring route parts is controlled in the precision setting step S130. A degree of precision of cleaning increases as the space between neighboring route parts becomes closer to each other and decreases as the space between neighboring route parts becomes apart from each other. The space between neighboring route parts is set to a narrow level when the cleaning robot 100 cleans a severely contaminated water tank or intensively cleans part of the route, which is severely contaminated. The space between neighboring route parts is set to a wide level when the cleaning robot 100 cleans a water tank that is not seriously contaminated or performs rough cleaning before thorough cleaning.

One of the manual cleaning mode and the automatic cleaning mode can be selected according to a degree of contamination of the water stored in the water tank 10 in the mode setting step S140. Specifically, the manual cleaning mode can be selected (S145) when the internal state of the water tank 10 can be recognized with the camera 168 attached to the cleaning robot 100 due to a low degree of contamination. On the contrary, the automatic cleaning mode can be selected (S150) when the internal state of the water tank 10 is difficult to recognize with the camera 168 attached to the cleaning robot 100 due to a high degree of contamination.

In the preparation step S100, it is possible to display the number of times cleaning is repeated, the area which has been cleaned by the cleaning robot 100 and the area which is not cleaned.

An underwater sediment cleaning method according to the automatic cleaning mode will now be explained.

WYBOTICS EX1037
Wybotics v. Zodiac
Page 142

FIG. 14 is a flowchart showing the underwater sediment cleaning method according to the automatic cleaning mode according to an embodiment of the present invention.

Referring to FIG. 14, the underwater sediment cleaning method according to the automatic cleaning mode includes a control step S161, a moving step S162, a target point arrival determination step S163 and a cleaning completion determination step S166.

Location information is received from the cleaning robot 100 and the location of the cleaning robot 100 is controlled based on the received location information in the control step S161.

FIG. 15 is a flowchart showing the control step in the underwater sediment cleaning method according to the automatic cleaning mode, shown in FIG. 14.

Referring to FIG. 15, the control step S161 includes a location information acquisition step S1611, a correction step S1612, a target point calculating step S1613, a location error calculating step S1614, and a control input calculating step S1615.

The automatic cleaning unit 354 can acquire first location information and second location information from the cleaning robot 100. The first location information is sensed by the GPS sensor 191 included in the cleaning robot 100 and the second location information is estimated based on the number of revolutions of the wheels 122, transmitted from the encoder set in the wheel motor 122a of the cleaning robot 100.

The first location information and the second location information are acquired in the location information acquisition step S1611. The current location of the cleaning robot 100 is precisely calculated using extended Kalman filter based on the first location information and the second location information in the correction step S1612. In the target point calculating step S1613, a target point on the route generated in the preparation step S100, which has to be tracked in the current location, is calculated and found based on the current location of the cleaning robot 100, calculated in the correction step S1612. A difference between the target point and the current location is calculated in the location error calculating step S1614. In the control input calculating step S1615, speed values of the left and right wheels 122 of the cleaning robot 100 are calculated based on the difference between the target point and the current location, calculated in the location error calculating step S1614.

Referring back to FIG. 14, in the moving step S162, the cleaning robot 100 moves toward the target point according to a rotation speed of the encoder of the wheel motor 122a based on the speed values of the left and right wheels 122, calculated in the control input calculating step S1615.

It is determined whether the cleaning robot 100 arrives at the target point in the target point arrival determination step S163. Here, the cleaning robot 100 moving toward the target point may not reach the target point. Specifically, the cleaning robot 100 cannot move due to an obstruction on the moving route or the moving speed of the cleaning robot 100 is reduced since there are large amount of works on the moving route.

When the cleaning robot 100 cannot arrive at the target point, a predetermined optimal load of the cleaning robot 100 is compared with the current load of the cleaning robot 100 (S165) to detect the load of the cleaning robot 100 (S165). The load of the cleaning robot 100 can be calculated based on the current consumed by the cleaning robot 100 and the rotation speed of the wheels.

When the cleaning robot 100 cannot reach the target point since the load of the cleaning robot 100 exceeds the optimal load, it can be determined that an obstruction appears on the moving route of the cleaning robot 100.

FIG. 16 is a flowchart showing an operation of generating a detour of the cleaning robot 100 in the underwater sediment cleaning method according to the automatic cleaning mode, shown in FIG. 14, and FIG. 17 is a view for explaining an algorithm of generating the detour of the cleaning robot 100 in the underwater sediment cleaning method according to the automatic cleaning mode, shown in FIG. 14.

Referring to FIGS. 16 and 17, when the load of the cleaning robot 100 exceeds the optimal load, the detour of the cleaning robot 100 is generated (S166). The operation of generating the detour includes an unattainable target point search step S1661, an unattainable target point removal step S1662, a new target point candidate generating step S1663, and a new target point selecting step S1664.

Specifically, the cleaning robot 100 cannot move toward the target point $(X_{wpt(i)}, Y_{wpt(i)})$ in the current location $(X_{robot(i)}, Y_{robot(i)})$. Accordingly, it is required to generate a new target point of the cleaning robot 100.

New target point candidates are generated based on the target point $(X_{wpt(i-1)}, Y_{wpt(i-1)})$ through which the cleaning robot 100 passed on the basis of the current location $(X_{robot(i)}, Y_{robot(i)})$ of the cleaning robot 100 and a target point $(X_{wpt(i+1)}, Y_{wpt(i+1)})$ after the initial target point $(X_{wpt(i)}, Y_{wpt(i)})$.

Here, a circle having a diameter r_1 corresponding to the straight line that connects the two target points $(X_{wpt(i-1)}, Y_{wpt(i-1)})$ and $(X_{wpt(i+1)}, Y_{wpt(i+1)})$ can be obtained. A normal which intersects the line that passes the center point of the circle and connects the two target points $(X_{wpt(i-1)}, Y_{wpt(i-1)})$ and $(X_{wpt(i+1)}, Y_{wpt(i+1)})$ is generated and two intersection points of the circle and the normal are generated as new target point candidates $(X_{wpt(i)}^{cadi1}, Y_{wpt(i)}^{cadi1})$ and $(X_{wpt(i)}^{cadi2}, Y_{wpt(i)}^{cadi2})$.

In consideration of whether the cleaning robot 100 collides with the working environment and distances between the two target point candidates $(X_{wpt(i)}^{cadi1}, Y_{wpt(i)}^{cadi1})$ and $(X_{wpt(i)}^{cadi2}, Y_{wpt(i)}^{cadi2})$ and the following target point $(X_{wpt(i+2)}, Y_{wpt(i+2)})$, the final target point is selected from the two new target point candidates $(X_{wpt(i)}^{cadi1}, Y_{wpt(i)}^{cadi1})$ and $(X_{wpt(i)}^{cadi2}, Y_{wpt(i)}^{cadi2})$. The final target point becomes a new target point and a route to the new target point becomes a detour around the initial target point at which the cleaning robot 100 cannot arrive.

When the cleaning robot 100 cannot reach the target point even though the load of the cleaning robot 100 is less than the optimal load, it can be determined that there is a large amount of works.

WYBOTICS EX1037
Wybotics v. Zodiac
Page 143

FIG. 18 is a flowchart showing an operation of securing a moving route of the cleaning robot when the cleaning robot moves in the automatic cleaning mode in the underwater sediment cleaning method shown in FIG. 14.

Referring to FIG. 18, when the load of the cleaning robot 100 is less than the optimal load, the operation of securing the moving route of the cleaning robot 100 is performed (S167). That is, when the load of the cleaning robot 100 is determined to be less than the optimal load and the moving speed of the cleaning robot 100 is reduced, a forward movement command is inputted to the cleaning robot 100 (S1671).

If the cleaning robot 100 can move according to the forward movement command (S1672), the cleaning robot 100 moves forward. Here, although the cleaning robot 100 moves toward the target point at a speed lower than an input speed value since the cleaning robot 100 is moving forward on the route having a large amount of works, the cleaning robot 100 cannot arrive at the target point. A command of returning to the original position toward the target point is inputted to the cleaning robot 100 moving toward the target point according to the forward movement command, and the cleaning robot 100 moves backward to the original position (S1676).

The forward movement command and the command of returning to the original position are repeated for a predetermined operating time. Accordingly, the cleaning robot 100 can repeat forward movement and backward movement toward the target point on the route having a large amount of works to handle the works.

When the cleaning robot 100 cannot move even though the forward movement command is inputted to the cleaning robot 100 (S1672), a left-turn command or a right-turn command based on the direction to the target point is inputted. The cleaning robot 100 moves to a left or right direction at 30° from the direction to the target point according to the left-turn or right-turn command (S1673).

If the cleaning robot 100 can move according to the left-turn or right-turn command (S1674), the cleaning robot 100 turns left or right according to the left-turn or right-turn command. The command of returning to the original position toward the target point is inputted to the cleaning robot 100 turning left or right, and thus the cleaning robot 100 moves backward to the original position before the forward movement command is inputted thereto.

In this manner, the left-turn or right-turn command and the command of returning to the original position toward the target point are inputted to the cleaning robot 100 that cannot move toward the target point, and thus the large amount of works around the route to the target point is gradually reduced and the cleaning robot 100 becomes a state that the cleaning robot 100 can move toward the target point when the works are handled to some degree by the cleaning robot 100.

When the cleaning robot 100 cannot move even though the left-turn or right-turn command is inputted to the cleaning robot 100 (S1674), the cleaning robot 100 is moved backward from the current location of the cleaning robot 100. Then, the cleaning robot 100 moves backward to a position behind the position where the forward movement command is inputted to the cleaning robot 100 (S1675). When the left-turn or right-turn command is inputted to the cleaning robot 100 moved backward, the cleaning robot 100 turns left or right according to the left-turn or right-turn command (S1673).

In this manner, the backward movement command is inputted to the cleaning robot 100 that cannot move toward the target point and turn left or right to gradually reduce the large amount works around the route to the target point and make the cleaning robot 100 be in a state that the cleaning robot 100 can move toward the target point when the works are handled to some extent by the cleaning robot 100.

The forward movement command (S1671) and the command of returning to the original position toward the target point (S1676) are repeated for a predetermined operating time (S1677). Accordingly, the cleaning robot 100 can repeat forward movement and backward movement on the route having the large amount of works to handle the works.

That is, the cleaning robot 100 having a load determined to be less than the optimal load can repeatedly secure the moving route for the predetermined operating time to handle a large amount of works.

After the lapse of the predetermined operating time (S1677), the cleaning robot 100 returns to the control step S161 and moves to find the target point.

Referring back to FIG. 14, when the cleaning robot 100 reaches the target point in the target point arrival determination step S163, speed values of the left and right wheels for the next target point are inputted to the cleaning robot 100. The cleaning robot 100 moves toward the next target point according to the speed values of the left and right wheels.

When the control step S161 and the moving step S162 are repeated, the cleaning robot 100 can arrive at the final target point (S163). Then, the operation of discharging the contaminated water from the water tank 10 is finished.

Referring back to FIG. 13a, when the manual cleaning mode is selected in the mode selection step S140 (S150), the user can operate the operation console 400 while observing the image photographed by the camera 167 to control the cleaning robot 100.

The contaminated water sucked by the cleaning robot 100 is discharged to the tank 210 of the sediment separator 200. The contaminated water discharged to the tank 210 passes through the filter 240. Here, the sediment contained in the contaminated water is left at one side of the tank 210 and clean water flows to the other side of the tank 210. The sediment left in the tank 210 is discharged to the outside of the tank 210 through the sediment discharge pipe 220 and the clean water flows into the water tank.

PATENT CITATIONS

Cited Patent	Filing date	Publication date	Applicant	Title
JP2001029910A *				*Title not available*
JP2002012205A *				*Title not available*
JP2004243202A *				*Title not available*

WYBOTICS EX1037
Wybotics v. Zodiac
Page 144

Cited Patent	Filing date	Publication date	Applicant	Title
JPH0681677U *				*Title not available*
JPH06285446A *				*Title not available*
US20040021439 *	Jul 30, 2002	Feb 5, 2004	Joseph Porat	Pool cleaning method and apparatus

* Cited by examiner

REFERENCED BY

Citing Patent	Filing date	Publication date	Applicant	Title
EP2813645A1 *	May 14, 2014	Dec 17, 2014	Maytronics Ltd.	A cleaning brush for a pool cleaning apparatus
EP2974805A1 *	Jan 15, 2015	Jan 20, 2016	Posco	Apparatus for preventing blockages of foreign objects and cleaning robot including the same
EP2882830A1 *	Aug 6, 2014	Feb 10, 2016	Korea Institute of Ocean Science and Technology	Robot for mining manganese nodules on deep seafloor
US2384734	Oct 12, 2012	May 10, 2016	Korea Institute Of Ocean Science & Technology	Robot for mining manganese nodules on deep seafloor
US8338999	Jul 10, 2012	Jul 12, 2016	Aqua Products, Inc.	Pool cleaning system and method to automatically clean surfaces of a pool using images from a camera
US20140015950 *	Jul 10, 2012	Jan 16, 2014	Aqua Products, Inc.	Pool cleaning system and method

* Cited by examiner

CLASSIFICATIONS

International Classification	B25J5/00, E04H4/16, B08B9/087
Cooperative Classification	E02F7/06, E02F3/9281, E02F3/907, E02F3/8866, B08B9/08, Y10S901/01, E04H4/1654, G05D1/0278, Y10S901/40
European Classification	B08B9/08, E02F3/92T4T, E02F3/90D, E02F3/88F4, E02F7/06

LEGAL EVENTS

Date	Code	Event	Description
Apr 11, 2012	121	Ep: the epo has been informed by wipo that ep was designated in this application	Ref document number: 11818277 Country of ref document: EP Kind code of ref document: A1
Feb 19, 2013	WWE	Wipo information: entry into national phase	Ref document number: 13817630 Country of ref document: US
Feb 20, 2013	NENP	Non-entry into the national phase in:	Ref country code: DE

Google Home - Sitemap - USPTO Bulk Downloads - Privacy Policy - Terms of Service - About Google Patents - Send Feedback

Data provided by IFI CLAIMS Patent Services

Electronic Acknowledgement Receipt

EFS ID:	26554472
Application Number:	15207065
International Application Number:	
Confirmation Number:	6686
Title of Invention:	POOL CLEANING SYSTEM AND METHOD TO AUTOMATICALLY CLEAN SURFACES OF A POOL USING IMAGES FROM A CAMERA
First Named Inventor/Applicant Name:	Kameshwar Durvasula
Customer Number:	38137
Filer:	Steven M. Hertzberg/Thad Murphy
Filer Authorized By:	Steven M. Hertzberg
Attorney Docket Number:	214,790
Receipt Date:	04-AUG-2016
Filing Date:	11-JUL-2016
Time Stamp:	19:08:57
Application Type:	Utility under 35 USC 111(a)

Payment information:

Submitted with Payment	no

File Listing:

Document Number	Document Description	File Name	File Size(Bytes)/ Message Digest	Multi Part /.zip	Pages (if appl.)
1	Information Disclosure Statement (IDS) Form (SB08)	USPTO_IDSform15207065.pdf	613235 881bbab067462a5ff918031971bc43576eb84bae	no	6

Warnings:

Information:					
2	Transmittal Letter	AFS_IDS_Transmittal15207065.pdf	242186 5de079c66442e24948ad55384a00ffc782c9c687	no	4
Warnings:					
Information:					
3	Foreign Reference	CN_101139007A_translation.pdf	1033256 03dc81c3a749e7e5608f56cc792593ea71981791	no	12
Warnings:					
Information:					
4	Foreign Reference	EP0687964A1_English.pdf	365981 41df014329a9194816993d72a1a05dcb262fb806	no	4
Warnings:					
Information:					
5	Foreign Reference	EP0811432A2.pdf	275441 8ee1ed15ecd7e01aa7f8d0ee0c0faa44d3cfe63b	no	5
Warnings:					
Information:					
6	Foreign Reference	JP_S6162905A_abstract.pdf	44380 2ad722109a1032f5cb72059c5e9892fa20c9caee	no	1
Warnings:					
Information:					
7	Foreign Reference	WO2004019295A1.pdf	522357 988546d403b78fe22a203118308f4daec2e380b2	no	6
Warnings:					
Information:					
8	Foreign Reference	WO2009031361MechanicalTranslation.pdf	917945 c1d25561d880a482c515ddf5dc9e363f50395708	no	11
Warnings:					
Information:					

9	Foreign Reference	WO2012023676A1.pdf	1079322 e1976703f8ea4b9a7fed62056053690ed1f8c9a3	no	13
Warnings:					
Information:					
10	Other Reference-Patent/App/Search documents	SpanishPatentNoP201331047SearchReport.pdf	83748 8362019a72ec39c37035681df290a01da368cd36	no	1
Warnings:					
Information:					
			Total Files Size (in bytes):	5177851	

This Acknowledgement Receipt evidences receipt on the noted date by the USPTO of the indicated documents, characterized by the applicant, and including page counts, where applicable. It serves as evidence of receipt similar to a Post Card, as described in MPEP 503.

<u>New Applications Under 35 U.S.C. 111</u>
If a new application is being filed and the application includes the necessary components for a filing date (see 37 CFR 1.53(b)-(d) and MPEP 506), a Filing Receipt (37 CFR 1.54) will be issued in due course and the date shown on this Acknowledgement Receipt will establish the filing date of the application.

<u>National Stage of an International Application under 35 U.S.C. 371</u>
If a timely submission to enter the national stage of an international application is compliant with the conditions of 35 U.S.C. 371 and other applicable requirements a Form PCT/DO/EO/903 indicating acceptance of the application as a national stage submission under 35 U.S.C. 371 will be issued in addition to the Filing Receipt, in due course.

<u>New International Application Filed with the USPTO as a Receiving Office</u>
If a new international application is being filed and the international application includes the necessary components for an international filing date (see PCT Article 11 and MPEP 1810), a Notification of the International Application Number and of the International Filing Date (Form PCT/RO/105) will be issued in due course, subject to prescriptions concerning national security, and the date shown on this Acknowledgement Receipt will establish the international filing date of the application.

UNITED STATES PATENT AND TRADEMARK OFFICE

UNITED STATES DEPARTMENT OF COMMERCE
United States Patent and Trademark Office
Address: COMMISSIONER FOR PATENTS
P.O. Box 1450
Alexandria, Virginia 22313-1450
www.uspto.gov

APPLICATION NUMBER	FILING or 371(c) DATE	GRP ART UNIT	FIL FEE REC'D	ATTY.DOCKET.NO	TOT CLAIMS	IND CLAIMS
15/207,065	07/11/2016	3723	1900	214,790	22	2

CONFIRMATION NO. 6686

38137
ABELMAN, FRAYNE & SCHWAB
666 THIRD AVENUE, 10TH FLOOR
NEW YORK, NY 10017

FILING RECEIPT

OC000000084617725

Date Mailed: 07/26/2016

Receipt is acknowledged of this non-provisional patent application. The application will be taken up for examination in due course. Applicant will be notified as to the results of the examination. Any correspondence concerning the application must include the following identification information: the U.S. APPLICATION NUMBER, FILING DATE, NAME OF APPLICANT, and TITLE OF INVENTION. Fees transmitted by check or draft are subject to collection. Please verify the accuracy of the data presented on this receipt. **If an error is noted on this Filing Receipt, please submit a written request for a Filing Receipt Correction. Please provide a copy of this Filing Receipt with the changes noted thereon. If you received a "Notice to File Missing Parts" for this application, please submit any corrections to this Filing Receipt with your reply to the Notice. When the USPTO processes the reply to the Notice, the USPTO will generate another Filing Receipt incorporating the requested corrections**

Inventor(s)

Kameshwar Durvasula, Garfield, NJ;
William Londono Correa, Bloomfield, NJ;

Applicant(s)

AQUA PRODUCTS, INC., Cedar Grove, NJ;

Power of Attorney: None

Domestic Priority data as claimed by applicant

This application is a CON of 13/545,918 07/10/2012 PAT 9388595

Foreign Applications for which priority is claimed (You may be eligible to benefit from the **Patent Prosecution Highway** program at the USPTO. Please see http://www.uspto.gov for more information.) - None.
Foreign application information must be provided in an Application Data Sheet in order to constitute a claim to foreign priority. See 37 CFR 1.55 and 1.76.

Permission to Access Application via Priority Document Exchange: Yes

Permission to Access Search Results: Yes

Applicant may provide or rescind an authorization for access using Form PTO/SB/39 or Form PTO/SB/69 as appropriate.

If Required, Foreign Filing License Granted: 07/25/2016

The country code and number of your priority application, to be used for filing abroad under the Paris Convention, is **US 15/207,065**

Projected Publication Date: 11/03/2016

Non-Publication Request: No

Early Publication Request: No
Title

POOL CLEANING SYSTEM AND METHOD TO AUTOMATICALLY CLEAN SURFACES OF A POOL USING IMAGES FROM A CAMERA

Preliminary Class

015

Statement under 37 CFR 1.55 or 1.78 for AIA (First Inventor to File) Transition Applications: No

PROTECTING YOUR INVENTION OUTSIDE THE UNITED STATES

Since the rights granted by a U.S. patent extend only throughout the territory of the United States and have no effect in a foreign country, an inventor who wishes patent protection in another country must apply for a patent in a specific country or in regional patent offices. Applicants may wish to consider the filing of an international application under the Patent Cooperation Treaty (PCT). An international (PCT) application generally has the same effect as a regular national patent application in each PCT-member country. The PCT process **simplifies** the filing of patent applications on the same invention in member countries, but **does not result** in a grant of "an international patent" and does not eliminate the need of applicants to file additional documents and fees in countries where patent protection is desired.

Almost every country has its own patent law, and a person desiring a patent in a particular country must make an application for patent in that country in accordance with its particular laws. Since the laws of many countries differ in various respects from the patent law of the United States, applicants are advised to seek guidance from specific foreign countries to ensure that patent rights are not lost prematurely.

Applicants also are advised that in the case of inventions made in the United States, the Director of the USPTO must issue a license before applicants can apply for a patent in a foreign country. The filing of a U.S. patent application serves as a request for a foreign filing license. The application's filing receipt contains further information and guidance as to the status of applicant's license for foreign filing.

Applicants may wish to consult the USPTO booklet, "General Information Concerning Patents" (specifically, the section entitled "Treaties and Foreign Patents") for more information on timeframes and deadlines for filing foreign patent applications. The guide is available either by contacting the USPTO Contact Center at 800-786-9199, or it can be viewed on the USPTO website at http://www.uspto.gov/web/offices/pac/doc/general/index.html.

For information on preventing theft of your intellectual property (patents, trademarks and copyrights), you may wish to consult the U.S. Government website, http://www.stopfakes.gov. Part of a Department of Commerce initiative, this website includes self-help "toolkits" giving innovators guidance on how to protect intellectual property in specific countries such as China, Korea and Mexico. For questions regarding patent enforcement issues, applicants may call the U.S. Government hotline at 1-866-999-HALT (1-866-999-4258).

WYBOTICS EX1037
Wybotics v. Zodiac
Page 150

LICENSE FOR FOREIGN FILING UNDER

Title 35, United States Code, Section 184

Title 37, Code of Federal Regulations, 5.11 & 5.15

GRANTED

The applicant has been granted a license under 35 U.S.C. 184, if the phrase "IF REQUIRED, FOREIGN FILING LICENSE GRANTED" followed by a date appears on this form. Such licenses are issued in all applications where the conditions for issuance of a license have been met, regardless of whether or not a license may be required as set forth in 37 CFR 5.15. The scope and limitations of this license are set forth in 37 CFR 5.15(a) unless an earlier license has been issued under 37 CFR 5.15(b). The license is subject to revocation upon written notification. The date indicated is the effective date of the license, unless an earlier license of similar scope has been granted under 37 CFR 5.13 or 5.14.

This license is to be retained by the licensee and may be used at any time on or after the effective date thereof unless it is revoked. This license is automatically transferred to any related applications(s) filed under 37 CFR 1.53(d). This license is not retroactive.

The grant of a license does not in any way lessen the responsibility of a licensee for the security of the subject matter as imposed by any Government contract or the provisions of existing laws relating to espionage and the national security or the export of technical data. Licensees should apprise themselves of current regulations especially with respect to certain countries, of other agencies, particularly the Office of Defense Trade Controls, Department of State (with respect to Arms, Munitions and Implements of War (22 CFR 121-128)); the Bureau of Industry and Security, Department of Commerce (15 CFR parts 730-774); the Office of Foreign AssetsControl, Department of Treasury (31 CFR Parts 500+) and the Department of Energy.

NOT GRANTED

No license under 35 U.S.C. 184 has been granted at this time, if the phrase "IF REQUIRED, FOREIGN FILING LICENSE GRANTED" DOES NOT appear on this form. Applicant may still petition for a license under 37 CFR 5.12, if a license is desired before the expiration of 6 months from the filing date of the application. If 6 months has lapsed from the filing date of this application and the licensee has not received any indication of a secrecy order under 35 U.S.C. 181, the licensee may foreign file the application pursuant to 37 CFR 5.15(b).

SelectUSA

The United States represents the largest, most dynamic marketplace in the world and is an unparalleled location for business investment, innovation, and commercialization of new technologies. The U.S. offers tremendous resources and advantages for those who invest and manufacture goods here. Through SelectUSA, our nation works to promote and facilitate business investment. SelectUSA provides information assistance to the international investor community; serves as an ombudsman for existing and potential investors; advocates on behalf of U.S. cities, states, and regions competing for global investment; and counsels U.S. economic development organizations on investment attraction best practices. To learn more about why the United States is the best country in the world to develop technology, manufacture products, deliver services, and grow your business, visit http://www.SelectUSA.gov or call +1-202-482-6800.

PATENT APPLICATION FEE DETERMINATION RECORD

Substitute for Form PTO-875

Application or Docket Number
15/207,065

APPLICATION AS FILED - PART I

FOR	(Column 1) NUMBER FILED	(Column 2) NUMBER EXTRA	SMALL ENTITY RATE($)	SMALL ENTITY FEE($)	OR	OTHER THAN SMALL ENTITY RATE($)	OTHER THAN SMALL ENTITY FEE($)
BASIC FEE (37 CFR 1.16(a), (b), or (c))	N/A	N/A	N/A			N/A	280
SEARCH FEE (37 CFR 1.16(k), (i), or (m))	N/A	N/A	N/A			N/A	600
EXAMINATION FEE (37 CFR 1.16(o), (p), or (q))	N/A	N/A	N/A			N/A	720
TOTAL CLAIMS (37 CFR 1.16(i))	22 minus 20 =	* 2			OR	x 80 =	160
INDEPENDENT CLAIMS (37 CFR 1.16(h))	2 minus 3 =	*				x 420 =	0.00
APPLICATION SIZE FEE (37 CFR 1.16(s))	If the specification and drawings exceed 100 sheets of paper, the application size fee due is $310 ($155 for small entity) for each additional 50 sheets or fraction thereof. See 35 U.S.C. 41(a)(1)(G) and 37 CFR 1.16(s).						0.00
MULTIPLE DEPENDENT CLAIM PRESENT (37 CFR 1.16(j))							0.00
* If the difference in column 1 is less than zero, enter "0" in column 2.			TOTAL			TOTAL	1760

APPLICATION AS AMENDED - PART II

		(Column 1) CLAIMS REMAINING AFTER AMENDMENT		(Column 2) HIGHEST NUMBER PREVIOUSLY PAID FOR	(Column 3) PRESENT EXTRA	SMALL ENTITY RATE($)	SMALL ENTITY ADDITIONAL FEE($)	OR	OTHER THAN SMALL ENTITY RATE($)	OTHER THAN SMALL ENTITY ADDITIONAL FEE($)
AMENDMENT A	Total (37 CFR 1.16(i))	*	Minus	**	=	x =		OR	x =	
AMENDMENT A	Independent (37 CFR 1.16(h))	*	Minus	***	=	x =		OR	x =	
AMENDMENT A	Application Size Fee (37 CFR 1.16(s))									
AMENDMENT A	FIRST PRESENTATION OF MULTIPLE DEPENDENT CLAIM (37 CFR 1.16(j))							OR		
						TOTAL ADD'L FEE		OR	TOTAL ADD'L FEE	

		(Column 1) CLAIMS REMAINING AFTER AMENDMENT		(Column 2) HIGHEST NUMBER PREVIOUSLY PAID FOR	(Column 3) PRESENT EXTRA	SMALL ENTITY RATE($)	SMALL ENTITY ADDITIONAL FEE($)	OR	OTHER THAN SMALL ENTITY RATE($)	OTHER THAN SMALL ENTITY ADDITIONAL FEE($)
AMENDMENT B	Total (37 CFR 1.16(i))	*	Minus	**	=	x =		OR	x =	
AMENDMENT B	Independent (37 CFR 1.16(h))	*	Minus	***	=	x =		OR	x =	
AMENDMENT B	Application Size Fee (37 CFR 1.16(s))									
AMENDMENT B	FIRST PRESENTATION OF MULTIPLE DEPENDENT CLAIM (37 CFR 1.16(j))							OR		
						TOTAL ADD'L FEE		OR	TOTAL ADD'L FEE	

* If the entry in column 1 is less than the entry in column 2, write "0" in column 3.
** If the "Highest Number Previously Paid For" IN THIS SPACE is less than 20, enter "20".
*** If the "Highest Number Previously Paid For" IN THIS SPACE is less than 3, enter "3".
The "Highest Number Previously Paid For" (Total or Independent) is the highest found in the appropriate box in column 1.

UNITED STATES PATENT AND TRADEMARK OFFICE

UNITED STATES DEPARTMENT OF COMMERCE
United States Patent and Trademark Office
Address: COMMISSIONER FOR PATENTS
P.O. Box 1450
Alexandria, Virginia 22313-1450
www.uspto.gov

APPLICATION NUMBER	FILING OR 371(C) DATE	FIRST NAMED APPLICANT	ATTY. DOCKET NO./TITLE
15/207,065	07/11/2016	Kameshwar Durvasula	214,790

CONFIRMATION NO. 6686

38137
ABELMAN, FRAYNE & SCHWAB
666 THIRD AVENUE, 10TH FLOOR
NEW YORK, NY 10017

INFORMAL NOTICE

OC000000084617726

Date Mailed: 07/26/2016

INFORMATIONAL NOTICE TO APPLICANT

Applicant is notified that the above-identified application contains the deficiencies noted below. No period for reply is set forth in this notice for correction of these deficiencies. However, if a deficiency relates to the inventor's oath or declaration, the applicant must file an oath or declaration in compliance with 37 CFR 1.63, or a substitute statement in compliance with 37 CFR 1.64, executed by or with respect to each actual inventor no later than the expiration of the time period set in the "Notice of Allowability" to avoid abandonment. See 37 CFR 1.53(f).

The item(s) indicated below are also required and should be submitted with any reply to this notice to avoid further processing delays.

- A properly executed inventor's oath or declaration has not been received for the following inventor(s):
  Kameshwar Durvasula
  William Londono Correa

Questions about the contents of this notice and the requirements it sets forth should be directed to the Office of Data Management, Application Assistance Unit, at **(571) 272-4000** or **(571) 272-4200** or **1-888-786-0101**.

/dmnguyen/

Under the Paperwork Reduction Act of 1995, no persons are required to respond to a collection of information unless it contains a valid OMB control number.

Application Data Sheet 37 CFR 1.76	Attorney Docket Number	214,790
	Application Number	
Title of Invention	POOL CLEANING SYSTEM AND METHOD TO AUTOMATICALLY CLEAN SURFACES OF A POOL USING IMAGES FROM A CAMERA	

The application data sheet is part of the provisional or nonprovisional application for which it is being submitted. The following form contains the bibliographic data arranged in a format specified by the United States Patent and Trademark Office as outlined in 37 CFR 1.76.
This document may be completed electronically and submitted to the Office in electronic format using the Electronic Filing System (EFS) or the document may be printed and included in a paper filed application.

Secrecy Order 37 CFR 5.2:

☐ Portions or all of the application associated with this Application Data Sheet may fall under a Secrecy Order pursuant to 37 CFR 5.2 (Paper filers only. Applications that fall under Secrecy Order may not be filed electronically.)

Inventor Information:

Inventor 1 Remove

Legal Name

Prefix	Given Name	Middle Name	Family Name	Suffix
	Kameshwar		Durvasula	

Residence Information (Select One) US Residency ● Non US Residency Active US Military Service

City	Garfield	Country of Residence i	NJ

Mailing Address of Inventor:

Address 1	8 Holly Lane		
Address 2			
City	Garfield	**State/Province**	NJ
Postal Code	07026	**Country** i	US

Inventor 2 Remove

Legal Name

Prefix	Given Name	Middle Name	Family Name	Suffix
	William	Londono	Correa	

Residence Information (Select One) ● US Residency ◯ Non US Residency Active US Military Service

City	Bloomfield	State/Province	NJ	Country of Residence i	US

Mailing Address of Inventor:

Address 1	499 Beardsley Ave.		
Address 2			
City	Bloomfield	**State/Province**	NJ
Postal Code	07009	**Country** i	US

All Inventors Must Be Listed - Additional Inventor Information blocks may be generated within this form by selecting the **Add** button. Add

Correspondence Information:

Under the Paperwork Reduction Act of 1995, no persons are required to respond to a collection of information unless it contains a valid OMB control number.

Application Data Sheet 37 CFR 1.76	Attorney Docket Number	214,790
	Application Number	
Title of Invention	POOL CLEANING SYSTEM AND METHOD TO AUTOMATICALLY CLEAN SURFACES OF A POOL USING IMAGES FROM A CAMERA	

Enter either Customer Number or complete the Correspondence Information section below.
For further information see 37 CFR 1.33(a).

☐ **An Address is being provided for the correspondence Information of this application.**

Customer Number	38137		
Email Address	e-mail@lawabel.com	Add Email	Remove Email

Application Information:

Title of the Invention	POOL CLEANING SYSTEM AND METHOD TO AUTOMATICALLY CLEAN SURFACES OF A POOL USING IMAGES FROM A CAMERA		
Attorney Docket Number	214,790	**Small Entity Status Claimed**	☐
Application Type	Nonprovisional		
Subject Matter	Utility		
Total Number of Drawing Sheets (if any)	4	**Suggested Figure for Publication (if any)**	1

Filing By Reference:

Only complete this section when filing an application by reference under 35 U.S.C. 111(c) and 37 CFR 1.57(a). Do not complete this section if application papers including a specification and any drawings are being filed. Any domestic benefit or foreign priority information must be provided in the appropriate section(s) below (i.e., "Domestic Benefit/National Stage Information" and "Foreign Priority Information").

For the purposes of a filing date under 37 CFR 1.53(b), the description and any drawings of the present application are replaced by this reference to the previously filed application, subject to conditions and requirements of 37 CFR 1.57(a).

Application number of the previously filed application	Filing date (YYYY-MM-DD)	Intellectual Property Authority or Country

Publication Information:

☐ Request Early Publication (Fee required at time of Request 37 CFR 1.219)

☐ **Request Not to Publish.** I hereby request that the attached application not be published under 35 U.S.C. 122(b) and certify that the invention disclosed in the attached application **has not and will not** be the subject of an application filed in another country, or under a multilateral international agreement, that requires publication at eighteen months after filing.

Representative Information:

Representative information should be provided for all practitioners having a power of attorney in the application. Providing this information in the Application Data Sheet does not constitute a power of attorney in the application (see 37 CFR 1.32).
Either enter Customer Number or complete the Representative Name section below. If both sections are completed the customer Number will be used for the Representative Information during processing.

Please Select One:	● Customer Number	US Patent Practitioner	◯ Limited Recognition (37 CFR 11.9)
Customer Number	38137		

Under the Paperwork Reduction Act of 1995, no persons are required to respond to a collection of information unless it contains a valid OMB control number.

Application Data Sheet 37 CFR 1.76	Attorney Docket Number	214,790
	Application Number	
Title of Invention	POOL CLEANING SYSTEM AND METHOD TO AUTOMATICALLY CLEAN SURFACES OF A POOL USING IMAGES FROM A CAMERA	

Domestic Benefit/National Stage Information:

This section allows for the applicant to either claim benefit under 35 U.S.C. 119(e), 120, 121, 365(c), or 386(c) or indicate National Stage entry from a PCT application. Providing benefit claim information in the Application Data Sheet constitutes the specific reference required by 35 U.S.C. 119(e) or 120, and 37 CFR 1.78.
When referring to the current application, please leave the "Application Number" field blank.

Prior Application Status	Pending		Remove
Application Number	Continuity Type	Prior Application Number	Filing or 371(c) Date (YYYY-MM-DD)
	Continuation of	13/545918	2012-07-10

Additional Domestic Benefit/National Stage Data may be generated within this form by selecting the **Add** button. Add

Foreign Priority Information:

This section allows for the applicant to claim priority to a foreign application. Providing this information in the application data sheet constitutes the claim for priority as required by 35 U.S.C. 119(b) and 37 CFR 1.55. When priority is claimed to a foreign application that is eligible for retrieval under the priority document exchange program (PDX)[i] the information will be used by the Office to automatically attempt retrieval pursuant to 37 CFR 1.55(i)(1) and (2). Under the PDX program, applicant bears the ultimate responsibility for ensuring that a copy of the foreign application is received by the Office from the participating foreign intellectual property office, or a certified copy of the foreign priority application is filed, within the time period specified in 37 CFR 1.55(g)(1).

Remove

Application Number	Country[i]	Filing Date (YYYY-MM-DD)	Access Code[i] (if applicable)

Additional Foreign Priority Data may be generated within this form by selecting the **Add** button. Add

Statement under 37 CFR 1.55 or 1.78 for AIA (First Inventor to File) Transition Applications

☐ This application (1) claims priority to or the benefit of an application filed before March 16, 2013 and (2) also contains, or contained at any time, a claim to a claimed invention that has an effective filing date on or after March 16, 2013.
NOTE: By providing this statement under 37 CFR 1.55 or 1.78, this application, with a filing date on or after March 16, 2013, will be examined under the first inventor to file provisions of the AIA.

Application Data Sheet 37 CFR 1.76	Attorney Docket Number	214,790
	Application Number	
Title of Invention	POOL CLEANING SYSTEM AND METHOD TO AUTOMATICALLY CLEAN SURFACES OF A POOL USING IMAGES FROM A CAMERA	

Authorization or Opt-Out of Authorization to Permit Access:

When this Application Data Sheet is properly signed and filed with the application, applicant has provided written authority to permit a participating foreign intellectual property (IP) office access to the instant application-as-filed (see paragraph A in subsection 1 below) and the European Patent Office (EPO) access to any search results from the instant application (see paragraph B in subsection 1 below).

Should applicant choose not to provide an authorization identified in subsection 1 below, applicant **must opt-out** of the authorization by checking the corresponding box A or B or both in subsection 2 below.

NOTE: This section of the Application Data Sheet is **ONLY** reviewed and processed with the **INITIAL** filing of an application. After the initial filing of an application, an Application Data Sheet cannot be used to provide or rescind authorization for access by a foreign IP office(s). Instead, Form PTO/SB/39 or PTO/SB/69 must be used as appropriate.

1. Authorization to Permit Access by a Foreign Intellectual Property Office(s)

A. Priority Document Exchange (PDX) - Unless box A in subsection 2 (opt-out of authorization) is checked, the undersigned hereby **grants the USPTO authority** to provide the European Patent Office (EPO), the Japan Patent Office (JPO), the Korean Intellectual Property Office (KIPO), the State Intellectual Property Office of the People's Republic of China (SIPO), the World Intellectual Property Organization (WIPO), and any other foreign intellectual property office participating with the USPTO in a bilateral or multilateral priority document exchange agreement in which a foreign application claiming priority to the instant patent application is filed, access to: (1) the instant patent application-as-filed and its related bibliographic data, (2) any foreign or domestic application to which priority or benefit is claimed by the instant application and its related bibliographic data, and (3) the date of filing of this Authorization. See 37 CFR 1.14(h)(1).

B. Search Results from U.S. Application to EPO - Unless box B in subsection 2 (opt-out of authorization) is checked, the undersigned hereby **grants the USPTO authority** to provide the EPO access to the bibliographic data and search results from the instant patent application when a European patent application claiming priority to the instant patent application is filed. See 37 CFR 1.14(h)(2).

The applicant is reminded that the EPO's Rule 141(1) EPC (European Patent Convention) requires applicants to submit a copy of search results from the instant application without delay in a European patent application that claims priority to the instant application.

2. Opt-Out of Authorizations to Permit Access by a Foreign Intellectual Property Office(s)

☐ A. Applicant **DOES NOT** authorize the USPTO to permit a participating foreign IP office access to the instant application-as-filed. If this box is checked, the USPTO will not be providing a participating foreign IP office with any documents and information identified in subsection 1A above.

☐ B. Applicant **DOES NOT** authorize the USPTO to transmit to the EPO any search results from the instant patent application. If this box is checked, the USPTO will not be providing the EPO with search results from the instant application.

NOTE: Once the application has published or is otherwise publicly available, the USPTO may provide access to the application in accordance with 37 CFR 1.14.

Under the Paperwork Reduction Act of 1995, no persons are required to respond to a collection of information unless it contains a valid OMB control number.

Application Data Sheet 37 CFR 1.76	Attorney Docket Number	214,790
	Application Number	
Title of Invention	POOL CLEANING SYSTEM AND METHOD TO AUTOMATICALLY CLEAN SURFACES OF A POOL USING IMAGES FROM A CAMERA	

Applicant Information:

Providing assignment information in this section does not substitute for compliance with any requirement of part 3 of Title 37 of CFR to have an assignment recorded by the Office.

Applicant 1 Remove

If the applicant is the inventor (or the remaining joint inventor or inventors under 37 CFR 1.45), this section should not be completed. The information to be provided in this section is the name and address of the legal representative who is the applicant under 37 CFR 1.43; or the name and address of the assignee, person to whom the inventor is under an obligation to assign the invention, or person who otherwise shows sufficient proprietary interest in the matter who is the applicant under 37 CFR 1.46. If the applicant is an applicant under 37 CFR 1.46 (assignee, person to whom the inventor is obligated to assign, or person who otherwise shows sufficient proprietary interest) together with one or more joint inventors, then the joint inventor or inventors who are also the applicant should be identified in this section.

Clear

● Assignee	Legal Representative under 35 U.S.C. 117	Joint Inventor
Person to whom the inventor is obligated to assign.	Person who shows sufficient proprietary interest	

If applicant is the legal representative, indicate the authority to file the patent application, the inventor is:

Name of the Deceased or Legally Incapacitated Inventor:

If the Applicant is an Organization check here. ☒

Organization Name	AQUA PRODUCTS, INC.		
Mailing Address Information For Applicant:			
Address 1	280 Grove Avenue		
Address 2			
City	Cedar Grove	**State/Province**	NJ
Country	US	Postal Code	07009
Phone Number		Fax Number	
Email Address			

Additional Applicant Data may be generated within this form by selecting the Add button. Add

Assignee Information including Non-Applicant Assignee Information:

Providing assignment information in this section does not substitute for compliance with any requirement of part 3 of Title 37 of CFR to have an assignment recorded by the Office.

Under the Paperwork Reduction Act of 1995, no persons are required to respond to a collection of information unless it contains a valid OMB control number.

Application Data Sheet 37 CFR 1.76	Attorney Docket Number	214,790
	Application Number	
Title of Invention	POOL CLEANING SYSTEM AND METHOD TO AUTOMATICALLY CLEAN SURFACES OF A POOL USING IMAGES FROM A CAMERA	

Assignee 1

Complete this section if assignee information, including non-applicant assignee information, is desired to be included on the patent application publication. An assignee-applicant identified in the "Applicant Information" section will appear on the patent application publication as an applicant. For an assignee-applicant, complete this section only if identification as an assignee is also desired on the patent application publication.

Remove

If the Assignee or Non-Applicant Assignee is an Organization check here. ☐

Prefix	**Given Name**	Middle Name	**Family Name**	Suffix

Mailing Address Information For Assignee including Non-Applicant Assignee:

Address 1			
Address 2			
City		**State/Province**	
Country i		Postal Code	
Phone Number		Fax Number	
Email Address			

Additional Assignee or Non-Applicant Assignee Data may be generated within this form by selecting the Add button. Add

Signature:

Remove

NOTE: This Application Data Sheet must be signed in accordance with 37 CFR 1.33(b). **However, if this Application Data Sheet is submitted with the INITIAL filing of the application and either box A or B is not checked in subsection 2 of the "Authorization or Opt-Out of Authorization to Permit Access" section, then this form must also be signed in accordance with 37 CFR 1.14(c).**

This Application Data Sheet **must** be signed by a patent practitioner if one or more of the applicants is a **juristic entity** (e.g., corporation or association). If the applicant is two or more joint inventors, this form must be signed by a patent practitioner, **all** joint inventors who are the applicant, or one or more joint inventor-applicants who have been given power of attorney (e.g., see USPTO Form PTO/AIA/81) on behalf of **all** joint inventor-applicants.

See 37 CFR 1.4(d) for the manner of making signatures and certifications.

Signature	/Steven M. Hertzberg/			Date (YYYY-MM-DD)	2016-07-11
First Name	Steven M.	Last Name	Hertzberg	Registration Number	41834

Additional Signature may be generated within this form by selecting the Add button. Add

Under the Paperwork Reduction Act of 1995, no persons are required to respond to a collection of information unless it contains a valid OMB control number.

Application Data Sheet 37 CFR 1.76	Attorney Docket Number	214,790
	Application Number	
Title of Invention	POOL CLEANING SYSTEM AND METHOD TO AUTOMATICALLY CLEAN SURFACES OF A POOL USING IMAGES FROM A CAMERA	

This collection of information is required by 37 CFR 1.76. The information is required to obtain or retain a benefit by the public which is to file (and by the USPTO to process) an application. Confidentiality is governed by 35 U.S.C. 122 and 37 CFR 1.14. This collection is estimated to take 23 minutes to complete, including gathering, preparing, and submitting the completed application data sheet form to the USPTO. Time will vary depending upon the individual case. Any comments on the amount of time you require to complete this form and/or suggestions for reducing this burden, should be sent to the Chief Information Officer, U.S. Patent and Trademark Office, U.S. Department of Commerce, P.O. Box 1450, Alexandria, VA 22313-1450. DO NOT SEND FEES OR COMPLETED FORMS TO THIS ADDRESS. **SEND TO: Commissioner for Patents, P.O. Box 1450, Alexandria, VA 22313-1450.**

Privacy Act Statement

The Privacy Act of 1974 (P.L. 93-579) requires that you be given certain information in connection with your submission of the attached form related to a patent application or patent. Accordingly, pursuant to the requirements of the Act, please be advised that: (1) the general authority for the collection of this information is 35 U.S.C. 2(b)(2); (2) furnishing of the information solicited is voluntary; and (3) the principal purpose for which the information is used by the U.S. Patent and Trademark Office is to process and/or examine your submission related to a patent application or patent. If you do not furnish the requested information, the U.S. Patent and Trademark Office may not be able to process and/or examine your submission, which may result in termination of proceedings or abandonment of the application or expiration of the patent.

The information provided by you in this form will be subject to the following routine uses:

1 The information on this form will be treated confidentially to the extent allowed under the Freedom of Information Act (5 U.S.C. 552) and the Privacy Act (5 U.S.C. 552a). Records from this system of records may be disclosed to the Department of Justice to determine whether the Freedom of Information Act requires disclosure of these records.

2. A record from this system of records may be disclosed, as a routine use, in the course of presenting evidence to a court, magistrate, or administrative tribunal, including disclosures to opposing counsel in the course of settlement negotiations.

3 A record in this system of records may be disclosed, as a routine use, to a Member of Congress submitting a request involving an individual, to whom the record pertains, when the individual has requested assistance from the Member with respect to the subject matter of the record.

4. A record in this system of records may be disclosed, as a routine use, to a contractor of the Agency having need for the information in order to perform a contract. Recipients of information shall be required to comply with the requirements of the Privacy Act of 1974, as amended, pursuant to 5 U.S.C. 552a(m).

5. A record related to an International Application filed under the Patent Cooperation Treaty in this system of records may be disclosed, as a routine use, to the International Bureau of the World Intellectual Property Organization, pursuant to the Patent CooperationTreaty.

6. A record in this system of records may be disclosed, as a routine use, to another federal agency for purposes of National Security review (35 U.S.C. 181) and for review pursuant to the Atomic Energy Act (42 U.S.C. 218(c)).

7. A record from this system of records may be disclosed, as a routine use, to the Administrator, General Services, or his/her designee, during an inspection of records conducted by GSA as part of that agency's responsibility to recommend improvements in records management practices and programs, under authority of 44 U.S.C. 2904 and 2906. Such disclosure shall be made in accordance with the GSA regulations governing inspection of records for this purpose, and any other relevant (i.e., GSA or Commerce) directive. Such disclosure shall not be used to make determinations about individuals.

8. A record from this system of records may be disclosed, as a routine use, to the public after either publication of the application pursuant to 35 U.S.C. 122(b) or issuance of a patent pursuant to 35 U.S.C. 151. Further, a record may be disclosed, subject to the limitations of 37 CFR 1.14, as a routine use, to the public if the record was filed in an application which became abandoned or in which the proceedings were terminated and which application is referenced by either a published application, an application open to public inspections or an issued patent.

9. A record from this system of records may be disclosed, as a routine use, to a Federal, State, or local law enforcement agency, if the USPTO becomes aware of a violation or potential violation of law or regulation.

POOL CLEANING SYSTEM AND METHOD TO AUTOMATICALLY CLEAN SURFACES OF A POOL USING IMAGES FROM A CAMERA

CROSS-REFERENCE TO RELATED APPLICATION

[001] This patent application is a Continuation of commonly owned U.S. Patent Application serial number 13/545,918, filed July10, 2012, the contents of which are incorporated by reference herein in its entirety.

BACKGROUND

[002] Manually cleaning the floor and sides of a swimming pool may be a tedious and time-consuming task. As a result, automated robotic pool cleaners have been developed. However, controlling and monitoring such automated robotic pool cleaners to insure that all portions of the pool surfaces are satisfactorily cleaned remains a challenge.

BRIEF DESCRIPTION OF THE DRAWINGS

[003] FIG. 1 is a schematic illustration of an example pool cleaning system.

[004] FIG. 2 is a schematic illustration of an implementation of the pool cleaning system of FIG. 1.

[005] FIG. 2 is a schematic illustration of an implementation of the pool cleaning system of FIG. 1.

[006] FIG. 3 is a schematic illustration of an implementation of the pool cleaning system of FIG. 1.

[007] FIG. 4 is a schematic illustration of an implementation of the pool cleaning system of FIG. 1.

[008] FIG. 5 is a schematic illustration of an implementation of the pool cleaning system of FIG. 1.

[009] FIG. 6 is a flow diagram of an example method that may be carried out with the pool cleaning system of FIG. 2-5.

[0010] FIG. 7 is a plan view of an example display with an example graphical depiction.

[0011] FIG. 8 is a plan view of another example display with an example graphical depiction.

WYBOTICS EX1037
Wybotics v. Zodiac
Page 162

[0012] FIG. 9 is a schematic illustration of an implementation of the pool cleaning system of FIG. 1 with an example pool cleaning vehicle.

[0013] FIG. 10 is a bottom perspective view of the example pool cleaning vehicle of the system of FIG. 9.

DETAILED DESCRIPTION OF THE EXAMPLE EMBODIMENTS

[0014] FIG. 1 schematically illustrates an example pool cleaning system 20. As schematically shown by FIG. 1, pool cleaning system 20 is adapted to clean submerged surfaces of a pool 22 containing a liquid 24. In particular, pool cleaning system 20 is adapted to clean at least a bottom or floor surface 26 of the pool 22 and possibly to additionally clean surfaces 28 of pool 22. As will be described hereafter, pool cleaning system facilitates the control and monitoring of a robotic pool cleaner to better assure that all portions of pool 22 are satisfactorily cleaned.

[0015] Pool cleaning system 20 comprises vehicle 30, cameras 32 and controller 42. Vehicle 30 comprises an automated powered device configured to travel adjacent to submerged or water containing surfaces of pool 20 (such as floor 26 and/or side surfaces 28) while cleaning such surfaces. In one implementation, vehicle 30 may include vacuum or suction devices, a liquid circulation system and a filter to draw debris, such as bacterial growth or plant growth, from such pool surfaces, wherein the drawn liquid containing such residue or foreign matter is filtered to collect the debris. In other implementations, vehicle30 may not collect such debris, wherein vehicle 30 merely loosens such debris on the pool surfaces such that the loosened or separated debris may be subsequently removed using the existing liquid filtering system of pool 22.

[0016] To assist in the loosening of debris, in one implementation, vehicle 30may additionally include a chemical dispenser to closely apply pool cleaning chemicals to the pool surfaces as the vehicle 30 traverses such surfaces. In one implementation, vehicle 30 may additionally or alternatively include one or more scrubbing members, such as active (driven) or passive (undriven or idling) brushes, to assist in the removal of residue or foreign matter from such pool surfaces. In yet another implementation, vehicle 30 may additionally or alternatively include liquid jets to assist in the loosening of debris.

[0017] To move along the submerged surfaces of pool 22, vehicle 30 includes one or more propulsion mechanisms. In one implementation, vehicle 30is propelled along the

submerged pool surfaces using wheels, rollers, tracks or other surface contacting members powered by a motor and the like. Such wheels, rollers or tracks may themselves include the scrubbing members used to clean the surfaces. In one implementation vehicle 30 may also alternatively be propelled by means of the vacuum or liquid jets. The vacuum or liquid jets used for such propulsion nozzle facilitate loosening of debris for collection by vehicle 30. In other implementations, vehicle 30 may include other propulsion mechanisms.

[0018] Cameras 32 comprise devices configured to capture video or time lapse images of pool 22. In the example illustrated, cameras 32 are mounted on structures external to pool 22. In other words, cameras 32 are not submerged. In other implementations, cameras 32 may alternatively be mounted to vehicle 30. In the example illustrated, cameras 32 capture movement of vehicle 30 while vehicle 30 is submerged within pool 22. In other implementations, cameras 32 merely capture images of submerged surfaces 26, 28 of pool 22.

[0019] In the example illustrated, cameras 32 comprise cameras serving as part of a home or pool security system, wherein such cameras detect the presence of a person at pool 22 satisfying a predefined characteristic and wherein an alert is output upon the person's detected presence. For example, in one implementation, cameras 32 are utilized as part of a security system that detects when a person below a predefined age, such as a child, is present at pool 22 without a detected presence of a recognized adult. In another implementation, cameras 32 may detect the presence of an unauthorized person or intruder at pool 22. Identification of the person may be achieved by an off-site human or computerized monitoring system, wherein signals from cameras 32 are transmitted across a wide area network or may be achieved with software of controller 42 which includes facial recognition or other identification programming.

[0020] Because pool cleaning system 20 utilizes pre-existing cameras 32provided as part of a security system or shares the use of cameras 32with such a home or pool security system, pool cleaning system 20 is easier to set up, less complex and less expensive. In other implementations, pool cleaning system 20 may utilize dedicated cameras 22 independent of any cameras associated with a home, facility or pool security system. In such an alternative system, cameras32 may be more precisely focused upon pool 22 and surfaces 26, 28while also including appropriate lenses or modifications to account for glare, refraction and the like to better facilitate the capture of surfaces and vehicle 30 which are submerged.

[0021] Controller 42 comprises one or more processing units in communication with vehicle 30 and cameras 32. For purposes of this application, the term "processing unit" shall mean a presently developed or future developed processing unit that executes sequences of instructions contained in a memory. Execution of the sequences of instructions causes the processing unit to perform steps such as generating control signals. The instructions may be loaded in a random access memory (RAM) for execution by the processing unit from a read only memory (ROM), a mass storage device, or some other persistent storage. In other embodiments, hard wired circuitry may be used in place of or in combination with software instructions to implement the functions described. For example, controller 42 may be embodied as part of one or more application-specific integrated circuits (ASICs). Unless otherwise specifically noted, the controller is not limited to any specific combination of hardware circuitry and software, nor to any particular source for the instructions executed by the processing unit.

[0022] In one implementation, controller 42 communicates with vehicle 30 and cameras 32 entirely across a wired connection. In another implementation, controller 42 communicates with vehicle 30 and cameras 32 across a wireless connection, such as cross a local area network (LAN) or a wide area network (WAN) such as the Internet. One of limitation, controller 42 may communicate with vehicle 30 and cameras 32 using a combination of both wired and wireless communication connections.

[0023] Controller 42 is configured to generate control signals for steering vehicle 30 based upon signals received from cameras 32. In one implementation, controller 42 provides the sole steering directions for vehicle 30 using signals from cameras 32. Because vehicle 30 is precisely steered under the control of controller 42, rather than traveling in a random manner, entire summer surfaces of pool 22 may be more quickly and efficiently covered and cleaned. Because controller 42 provides the only steering instructions for vehicle 30 and utilizes signals from cameras 32, complex steering algorithms or codes in either vehicle 30 or controller 42 may be omitted to reduce complexity and cost of system 20.

[0024] In another implementation, vehicle 30 may cover or travel across surfaces of pool 22 in either a random fashion or according to an automated pool coverage algorithm or pool coverage pattern stored in a memory associated with vehicle 30 or controller 42. In such an implementation, controller 42 utilizes signals from cameras 32 to verify that all of the surfaces of pool 22 have been cleaned, that no spots have been missed. Upon identifying a missed spot,

controller 42 utilizes signals from camera 32 to steer vehicle 32 cover such missed portions of surfaces 26, 28. According to one example, controller 42 not only uses signals from camera 32 to determine whether any portions of surfaces 26, 28 have been missed entirely, but to also determine whether any portions of surfaces 26, 28 have been cleaned, but not to a satisfactory degree or extent. In such circumstances, controller 42 uses signals from cameras 32 to steer vehicle 34 such areas to re-clean such portions until such portions have been satisfactorily cleaned such that the portions have a cleanliness characteristic satisfying a predefined threshold.

[0025] FIG. 2 schematically illustrates pool cleaning system 120, the particular example of pool cleaning system 20described above. Pool cleaning system 120 is similar to pool cleaning system 20 except that pool cleaning system120 additionally comprises dry station 46 and display 50. Those remaining components of pool cleaning system120 which correspond to components of pool cleaning system 20 are numbered similarly.

[0026] Dry station 46 comprises a station in communication with vehicle 30 and cameras 32 outside of pool 22. Dry station46 incorporates controller 42. In one implementation, dry station 46 communicates with vehicle 30 in a wired fashion. In such an implementation, dry station 46 further provides electrical power to vehicle 30 in a wired fashion. Dry station 46 communicates with cameras 32 and either a wired or wireless fashion.

[0027] Display 50 comprises a device to present a graphical images and text on a display screen. In one implementation, display 58 may be incorporated as part of dry station 46. In another implementation, display 50 may be provided on a portable electronic device, a computer, a television and the like. Display 50 is utilized by pool cleaning system120 to present information regarding the cleaning of pool 22 to facilitate control of vehicle 30 by controller 42. In one implementation, display 50 is utilized by pool cleaning system 120 and a controller 42 to present a graphical depiction of those portions of surfaces 26, 28 of pool 22 have not been satisfactorily cleaned so as to satisfy a predefined cleanliness characteristic threshold. Such portions may comprise portions that have been completely missed by vehicle 30 as well as those portions that have been covered by vehicle 30 but have not been satisfactorily cleaned with the given number of passes of vehicle 30 or the existing cleaning settings of vehicle 30. The graphical depiction presented on display 50 enables a person view the quality of the prior cleaning session and to input commands causing controller 42 to generate control signals using

signals from camera 32 to steer vehicle30 back to such identified portions where such portions may be cleaned at the same or elevated cleaning aggressiveness settings.

[0028] Another implementation, display 50 may be further utilized by controller 42 to depict the progress of vehicle 30 in cleaning pool 22. Such a display 50 allows a person to visually determine how much of the pool has been currently cleaned and to estimate the remaining time before the pool cleaning task is completed. In certain circumstances, using display 50, a person may adjust a setting of vehicle 30 to accelerate a rate at which surfaces 26, 20 of pool22 are cleaned to meet an earlier desired completion time for such pool cleaning.

[0029] FIG. 3 schematically illustrates pool cleaning system 220, another example implementation of pool cleaning system 20. Pool cleaning system 220 is similar to pool cleaning system 20 except that pool cleaning system 220additionally comprises dry station 246, display 50, and remote server 254. Those remaining components of pool cleaning system 220 which correspond to components of pool cleaning system 20 or pool cleaning system 120 are numbered similarly.

[0030] Dry station 246 is similar to dry station 46, described above, except that dry station 246 serves as a local interface for communication with controller 42 across a network 260. In one implementation, network 260 may comprise a local area network. In another implementation, network 260 may comprise a wide area network, such as the Internet. For example, in one implementation, dry station 246 may incorporate a modem. In one implementation, dry station 246 may communicate across a local area network to controller 42. In another implementation, dry station 246 may communicate through a router, across a local area network, to a local modem which communicates across a network 260. The example illustrated, dry station 246 further provides part of vehicle 30across a wired cable or wired connection. Display 50 is described above with respect to system 120.

[0031] Remote server 254 comprises a server remote from dry station 246 which is in communication with dry station 246across network 260. Remote server 254 includes controller 42. During operation, signals from cameras 32 are transmitted across dry station 246 across network 260 to controller 42 of remote server 254. Based upon such signals from cameras 32, controller 42 generates control signals which are transmitted back across network 260and through dry station 246 to vehicle 30 to steer vehicle 30.

[0032] As shown by FIG. 3, remote server 254 and network 260 may be shared as part of other pool cleaning systems320, wherein controller 42 generates control signals for steering the pool cleaning vehicle 30 of system 320 based upon signals from cameras 32 transmitted across dry station 246 of system 320. In such an implementation, the cost and complexity of pool cleaning system 220 is reduced since controller 42 is remotely provided at remote server 254 which services multiple pool cleaning systems 220, 320. Upgrades to controller 42 and its software are also more easily achieved for all pool cleaning systems to 20, 320 and their pools 22, 222 being serviced. In one implementation, the supervised cleaning, inspection and possible re-cleaning facilitated by the use of cameras 32may be provided as part of a subscription to users of vehicle 30. In such an implementation, a pool 22 having security cameras 32 may be upgraded with appropriate software or an appropriate software module added to dry station 246 to make a network connection with controller 42 which directs the security cameras 32 to capture vehicle 3020 utilizes such signals for steering vehicle 30.

[0033] FIG. 4 schematically illustrates pool cleaning system 420, another particular implementation of pool cleaning system 20. Pool cleaning system 420 is similar to pull cleaning system 120 except that pool cleaning system 420additionally comprises a portable electronic device 464. Those remaining components of pool cleaning system 420which correspond to components of pool cleaning system 120 are numbered similarly.

[0034] Portable electronic device 464 comprises a portable handheld electronic device in communication with controller 42and/or dry station 46 across network 260. Examples of such a portable electronic device (PED) 300 include, but are not limited to, a smart phone, a personal data assistant (PDA), laptop, notebook computer, tablet computer (e.g. IPAD) and MP3 player (e.g., IPOD TOUCH). In the example illustrated, PED 464 comprises input 466 and display 468.

[0035] Input 466 serves as a user interface for PED 464 by which inputs are made to PED 464. Input 466 facilitates entry of inputs or commands by a person to cause controller 42 to generate control signals varying the control of vehicle30. In one implementation, input 466 comprise a keyboard. In other implementations, input 466 may comprise a touchpad, a stylus, a microphone with associated speech recognition software or programming, a touch screen, buttons, switches and the like. In some implementations, input 466 may comprise a touch screen incorporated as part of display 468.

[0036] Display 468 comprises a user interface by which graphical or textual data is presented to a user. Display 468 may present the same or similar information as presented at dry station 246 by display 50 as described above. In one implementation, display 468 comprises a liquid crystal display. In other implementations, display 468 may comprise other types of display technology such as a light emitting diode display, an organic light emitting diode display (OLED), an electronic ink (e-ink) display or other types of display technology in present use or developed in the future. Although system 420 is illustrated as including controller 422 is part of dry station 46, in some implementations, controller 42 may alternatively be located as part of PED 464.

[0037] PED 464 enables a person located remote from pool 22 to monitor the progress of the cleaning of pool 22 by vehicle 30 of system 420. PED 464 provides a person with a graphical presentation (described above with respect to display 50) indicating those portions of surfaces 26, 28 of pool 22 that have been completed as well as those portions 26, 20 and that remain to be cleaned. The person may also be provided with a graphical indication of what portions need to be re-cleaned to meet predetermined cleanliness thresholds. In the example illustrated, input 466enables a person to enter commands or selections which are transmitted across network 260 to controller 42 to adjust operation of vehicle 30. For example, the path or route of vehicle 30 may be changed, the aggressiveness of the cleaning chemicals or mechanical cleaning devices may be adjusted, the speed at which vehicle 30 traverses surfaces 26, 28 may be adjusted. In response to such adjustment signals from PED 464, controller 42 may utilize signals from cameras 32 to adjust the steering of vehicle 30.

[0038] FIG. 5 schematically illustrates pool cleaning system 520, another example implementation of pool cleaning system 20. Pool cleaning system 520 is similar to pool cleaning system 420 except that pool cleaning system 520additionally comprises a remote server 554. Those remaining components of pool cleaning system 520 which correspond to components of pool cleaning system 420 are numbered similarly.

[0039] Remote server 554 is similar to remote server 254 described above with respect to system 220. Remote server554 comprises a server remote from dry station 246 which is in communication with dry station 246 across network 260. Remote server 254 includes controller 42. During operation, signals from cameras 32 are transmitted across dry station 246 across network 260 to controller 42 of remote server 254. Based upon such signals

from cameras 32, controller 42 generates control signals which are transmitted back across network 260 and through dry station 246 to vehicle 30 to steer vehicle 30. Controller 42 further relays either the raw signals from camera 32or image signals generated based upon signals from cameras 32 to PED 464, wherein such images (described above) are presented on display 468. As noted above, PED may further receive commands through input 466, wherein such commands are transmitted to controller 42 which generates control signals that are ultimately transmitted to vehicle 30 for steering vehicle 30.

[0040] As with remote server 254, remote server 554 and network 260 may be shared as part of other pool cleaning systems 320 (shown in FIG. 3), wherein controller 42 generates control signals for steering the pool cleaning vehicle 30 of system 320 based upon signals from cameras 32 transmitted across dry station 246 of system 320. In such implementations, controller 42 of remote server 554 may interact with other PEDs 464. In such an implementation, the cost and complexity of pool cleaning system 220 is reduced since controller 42 is remotely provided at remote server 254 which services multiple pool cleaning systems 220, 320. Upgrades to controller 42and its software are also more easily achieved for all pool cleaning systems to 20, 320 and their pools 22, 222being serviced. In one implementation, the supervised cleaning, inspection and possible re-cleaning facilitated by the use of cameras 32 may be provided as part of a subscription to users of vehicle 30. In such an implementation, a pool 22 having security cameras 32 may be upgraded with appropriate software or an appropriate software module added to dry station 246 to make a network connection with controller 42 which directs the security cameras 32 to capture vehicle 3020 utilizes such signals for steering vehicle 30. As indicated by broken lines, in other implementations, the controller 42 for generating control signals steering vehicle 30 based upon signals from cameras 32 may alternatively be relocated in PED 464.

[0041] FIG. 6 is a flow diagram illustrating an example method 600 that may be carried out by any of systems 120-520. As indicated by step 602, cameras 32 capture images of pool cleaning by vehicle 30. As indicated by step 604, controller 42 obtain such signals from cameras 32 for the surfaces of pool 22 that have been cleaned. As indicated by step 606, controller 42 uses information gathered from the signals from cameras 32 to identify those portions of surfaces 26, 28 not satisfactorily cleaned—not satisfying a predefined cleanliness characteristic or measurement threshold. One example of a cleanliness characteristic measurement a threshold may be how well the color of a surface matches a predetermined

desirable color for the pool surface (such as original color of the tile or surface). A surface that has been missed entirely by vehicle 30 during a pool cleaning session may be automatically deemed to not satisfy a predetermined cleanliness characteristic.

[0042] As indicated by step 608, based upon such determinations, controller 42 generates control signals resulting in the presentation of a graphical depiction of those portions of pool 22 that has not been satisfactorily cleaned. Such graphical representations or depictions may be presented on display 50 or display 468. FIGS. 7 and 8 illustrate examples of graphical depictions that may be presented.

[0043] FIG. 7 illustrates display 468 presenting graphical depiction 620. Graphical depiction 620 comprises a first graphic622 having a first portion 624 representing sides or walls 28 of pool 22 and a second portion 626 representing the floor 26 of pool 22. Graphical depiction 620 further comprises a moving icon 628 representing the current positioning of vehicle 30. In one implementation, the path of vehicle 30 may additionally be depicted by icon 628shown in broken lines. As shown by FIG. 7, those portions 632 of surfaces 26, 28 of pool 22 (shown in FIG. 1) over which of vehicle 30 has moved are identified by graphical depiction 620 either by color, markings or other various distinctive attributes. Likewise, those portions 634 of surfaces 26, 28 of pool 22 that have not been covered by vehicle 30 are identified by a distinct color col marking or distinctive attribute of depiction 620. As a result, a person may view the current position of vehicle 30, the extent to which pool 22 has been cleaned or covered by vehicle 30 and the extent of pool 22 that remains to be cleaned. In the example illustrated, depiction620 further identifies those portions 638 of surfaces 26, 28 that have been cleaned, but which have not been cleaned to a satisfactory degree or extent. In one implementation, portions 638 may be identified by colors, brightness, markings or other visually distinctive attributes that are visually distinct from both portions 632 and portions 634. In other implementations, portions 638 may have the same characteristic of portions 634. In yet other implementations, different portions 638 may have different visual attributes depending upon a degree to which such clean portions have failed to satisfy the predefined cleanliness characteristic threshold. In some implementations, different port 638 may have different visual attributes depending upon different cleaning strategies that may be recommended for the different portions 638. For example, controller 42 may determine and recommend a first cleaning strategy (a first chemical solution jetted at a first rate and scrubbed at a first rate) with respect to

a first portion 638 and may recommend a second different cleaning strategy (a second chemical solution jetted at a second rate is about a second rate) with respect to a second portion 638, wherein the different cleaning strategies are represented by different visual attributes presented in depiction 620.

[0044] FIG. 8 illustrates display 468 presenting a graphical depiction 720. Graphical depiction 720 comprises a first graphic 622 having a first portion 624 representing sides or walls 28 of pool 22 and a second portion 626representing the floor 26 of pool 22 (shown in FIG. 1). Graphical depiction 720 is similar to graphical depiction 620except that graphical depiction 720 omits icon 628 presenting vehicle 30. Like depiction 620, depiction 720graphically depicts those portions 632 of surfaces 26, 28 over which vehicle 30 has traveled while in a cleaning mode. Depiction 720 also visually depicts those portions 634 that have not been covered by vehicle 30 in the cleaning mode and those portions 638 over which vehicle 30 has traveled while in the cleaning mode, but which have not been cleaned to a satisfactory degree. As illustrated in FIG. 8, different portions 638 may be visibly distinguished from one another through color, text or markings indicating either differences in the cleanliness of such portions 638 or indicating different recommended cleaning strategies or approaches that may be selected by a person using input 466 when vehicle 30 is steered back to such portions 638 for re-cleaning using signals from camera 32.

[0045] As indicated by step 610 of FIG. 6, controller 42 generates control signals steering vehicle 30 to re-clean portions of pool 22, such as portions 638. Such steering may be facilitated by using signals from cameras 32. As noted above, in some implementations, a person may be allowed choose a cleaning approach for a particular portion 638using input 466. The selection may be facilitated by visual inspection of the different visual attributes for the particular portion 638 provided by depiction 720 (or depiction 620). In some implementations, input 466 may additionally be utilized by a person to prioritize an order in which portions 638 are re-cleaned.

[0046] FIG. 9 illustrates pool cleaning system 820, an example implementation of pool cleaning system 20. Pool cleaning system 820 is similar to pool cleaning system 520 except the pool cleaning system 820 located controller 42 in dry station 246 and includes pool cleaning vehicle 830, a specific example of vehicle 30. As shown by FIG. 9, in addition to transmitting control signals generated by controller 42 to vehicle 830, dry station 246 further transmits power

from power source 831 through a power line or power cable 833 to vehicle 830. In the example illustrated, data communication and communication of control signals, also occurs across wired connections within or alongside the same line 833. In the example illustrated, remote server 554 serves as a communication link by which upgrades to controller 42 may be implemented across a wide number of pool cleaning systems and by which information from controller 42 is conveyed to one or more portable electronic devices 464 across network 260.

[0047] Vehicle 830 comprises a robotic or automated pool cleaning device. Vehicle 830 comprises a self-contained onboard filtration system with drive and pump motors. Vehicle 830 utilizes an internal microprocessor guided drive motor to systematically clean surfaces of pool 22. As shown by FIGS. 9 and 10, vehicle 830 utilizes a toothed track drive 900 provide traction and propulsion for vehicle 30. Vehicle 830 comprises rotating brushes 902 to loosen waterline buildup and breakdown large debris while power washing jets 904 flush out dirt from pores, seems in corners where brushes 902 may not be able to reach. The loosened dirt and debris is vacuumed through off-center vacuum ports 906 which passes the vacuumed debris through internally house filter bag. In the example illustrated, vehicle 830 further comprises rollers 908 which inhibit vehicle 830 from becoming impeded or stuck on raised drains or pop-up heads. Although illustrated as being employed with system 820, vehicle 830 may also be utilized with any of systems 20, 120, 220, 320 and 420. In other implementations, other robotic or automated pool cleaning vehicles may be utilized.

[0048] Although the present disclosure has been described with reference to example embodiments, workers skilled in the art will recognize that changes may be made in form and detail without departing from the spirit and scope of the claimed subject matter. For example, although different example embodiments may have been described as including one or more features providing one or more benefits, it is contemplated that the described features may be interchanged with one another or alternatively be combined with one another in the described example embodiments or in other alternative embodiments. Because the technology of the present disclosure is relatively complex, not all changes in the technology are foreseeable. The present disclosure described with reference to the example embodiments and set forth in the following claims is manifestly intended to be as broad as possible. For example, unless specifically otherwise noted, the claims reciting a single particular element also encompass a plurality of such particular elements.

What is claimed is:

1. A pool cleaning system for cleaning debris from a submerged surface of a swimming pool comprising:

aself-propelled pool cleaner having rotatably-mounted supports for supporting and guiding the cleaner on the pool surface;

a filter configured to retain the debris collected from the submerged surface of the swimming pool;

an electric motor for enabling the rotation of the rotatably-mounted supports on the pool surface;

at least one camera to capture imagery of the pool surface;

a controller, in electronic communication with the at least one camera, to determine a cleanliness characteristic of the pool surface on which the cleaner has passed based on the camera imageryand generate a control signal to directmovement of the cleaner based on the cleanliness characteristic of the pool surface, wherein the control signal directs movement of the cleaner to reclean a portion of the pool surface where the cleanliness characteristic fails to satisfy a predefined threshold.

2. The system of claim 1, wherein the at least one camera is carried by the cleaner.

3. The system of claim 1, wherein the controller is carried by the cleaner.

4. The system of claim 1, wherein the electric motor is mechanically connected to at least one of the rotatably-mounted supports.

5. The system of claim 1, wherein the controller is operable to execute one or more cleaning programs for cleaning the submerged surfaces of the pool.

6. The system of claim 1, wherein the captured imagery from the at least one camera is digitally processed by the controller to determine the cleanliness characteristic of the pool surface.

7. The system of claim 1, wherein the captured imagery from the at least one camera is digitally processed by a remote processor to determine the cleanliness characteristic of the pool surface.

8. The system of claim 1 further comprising at least one sensor to detect the cleanliness characteristic of the pool surface on which the cleaner has passed.

9. The system of claim 8, wherein the at least one sensor is carried by the cleaner.

10. The system of claim 1, wherein the control signal causes the cleaner to drive in the direction of the portion of the pool surface to be recleaned.

11. The system of claim 1, wherein the control signal causes the cleaner to steer in the direction of the portion of the pool surface to be recleaned.

12. The system of claim 1 further comprising a dry station located remotely from the cleaner and in communication with the cleaner, wherein the dry station includes the controller.

13. The system of claim 1 further comprising a dry station located remotely from the cleaner and in communication with the cleaner, wherein the controller is located remotely from the cleaner and the dry station.

14. The system of claim 1 further comprising a portable electronic device having a display, wherein the portable electronic device is configured to present a graphic on the display, the

graphic depicting the submerged surface of the pool and those portions of the surface that remain uncleaned as the cleaner traverses the pool surface.

15. The system of claim 1, wherein the controller controls electric power provided to the electric motor.

16. A pool cleaning system for cleaning debris from a submerged surface of a swimming pool comprising:

aself-propelled pool cleaner having rotatably-mounted supports for supporting and guiding the cleaner on the pool surface;

an electric motor for enabling the rotation of the rotatably-mounted supports on the pool surface;

a filter configured to retain the debris collected from the submerged surface of the swimming pool;

at least one camera to capture imagery of the pool surface;

at least one sensor to detect a cleanliness characteristic of the pool surface on which the cleaner has passed;

a controller in electronic communication with the at least one camera and the at least one sensor to a generate a control signal to direct movement of the cleaner based on the cleanliness characteristic of the pool surface; and

wherein the control signal directs movement of the cleaner to reclean a portion of the pool surface where the cleanliness characteristic fails to satisfy a predefined threshold.

17. The system of claim 16, wherein the at least one camera and at least one sensor are carried by the cleaner.

18. The system of claim 16, wherein the controller is operable to execute one or more cleaning programs for cleaning the submerged surfaces of the pool.

19. The system of claim 16, wherein the at least one camera captures the imagery during a pass of the cleaner on the submerged surface and the captured imagery from the at least one camera is utilized to determine the cleanliness characteristic of the pool surface.

20. The system of claim 16, wherein the captured imagery from the at least one camera is digitally processed by the controller to determine the cleanliness characteristic of the pool surface.

21. The system of claim 16, wherein the control signal causes the cleaner to drive in the direction of the portion of the pool surface to be recleaned.

22. The system of claim 16, wherein the controller controls electric power provided to the electric motor.

ABSTRACT

[0049] A pool cleaning system for cleaning debris from a submerged surface of a swimming pool includes a self-propelled pool cleaner having rotatably-mounted supports for supporting and guiding the cleaner on the pool surface;an electric motor for enabling the rotation of the rotatably-mounted supports on the pool surface;at least one camera to capture imagery of the pool surface; a controller, in electronic communication with the at least one camera, to determine a cleanliness characteristic of the pool surface on which the cleaner has passed based on the camera imagery and generate a control signal to direct movement of the cleaner based on the cleanliness characteristic of the pool surface, wherein the control signal directs movement of the cleaner to reclean a portion of the pool surface where the cleanliness characteristic fails to satisfy a predefined threshold.

WYBOTICS EX1037
Wybotics v. Zodiac
Page 178

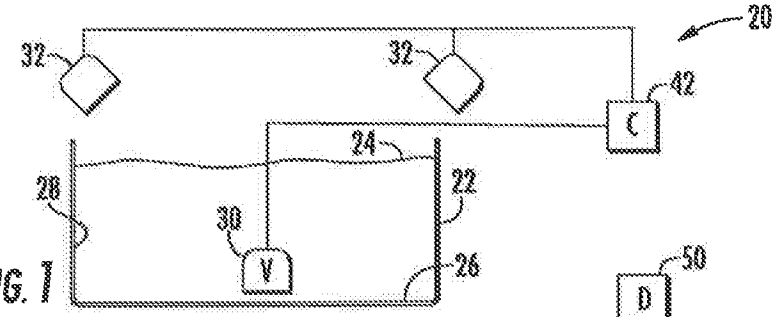

FIG. 1

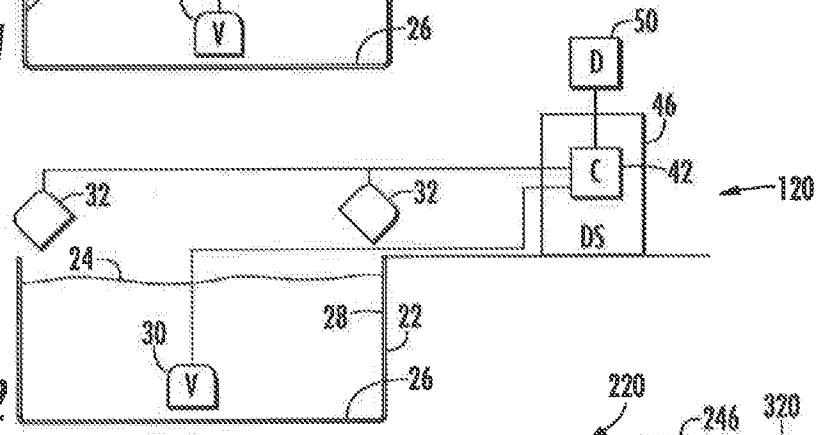

FIG. 2

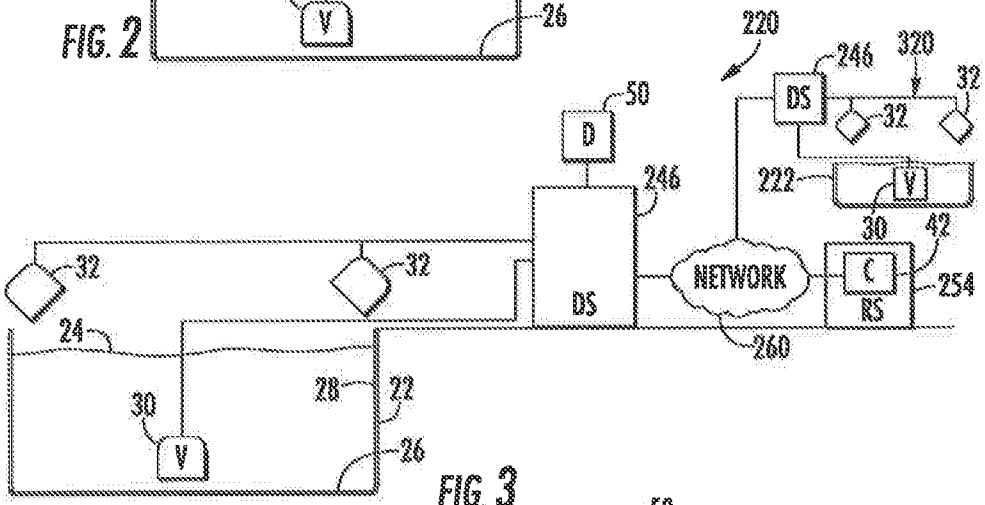

FIG. 3

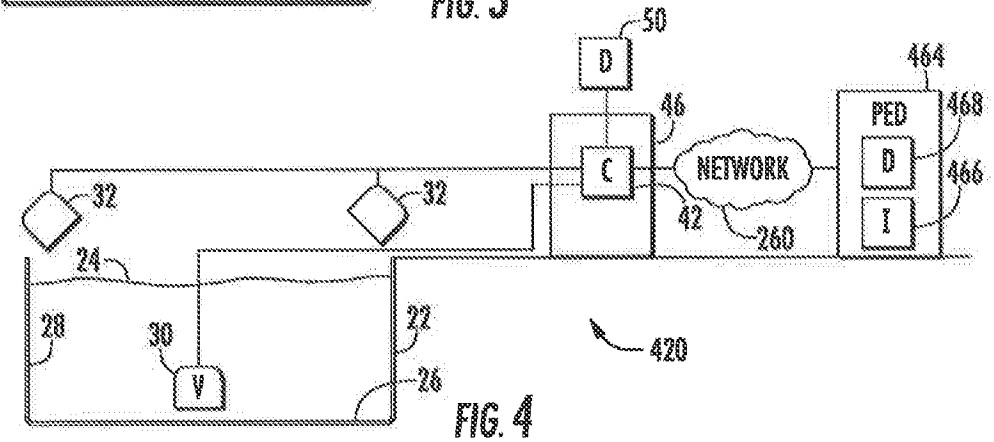

FIG. 4

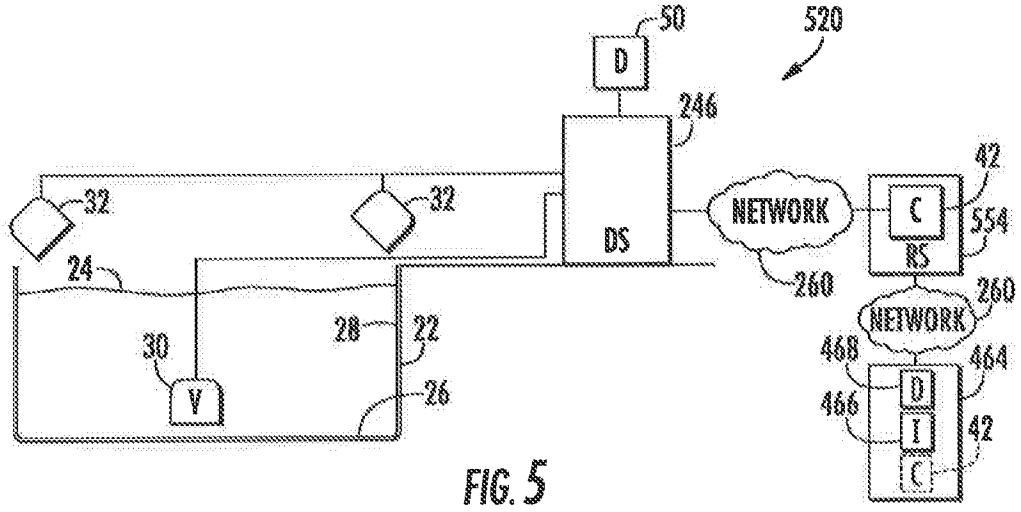

FIG. 5

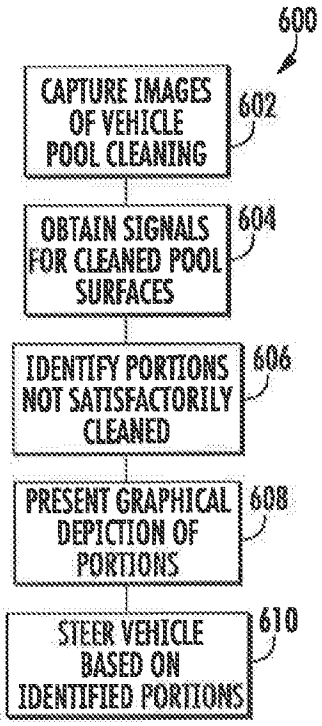

FIG. 6

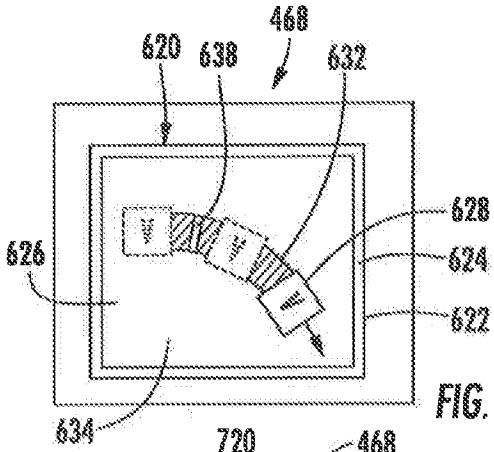

FIG. 7

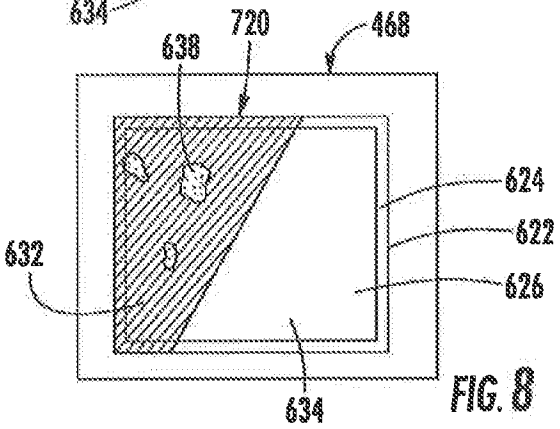

FIG. 8

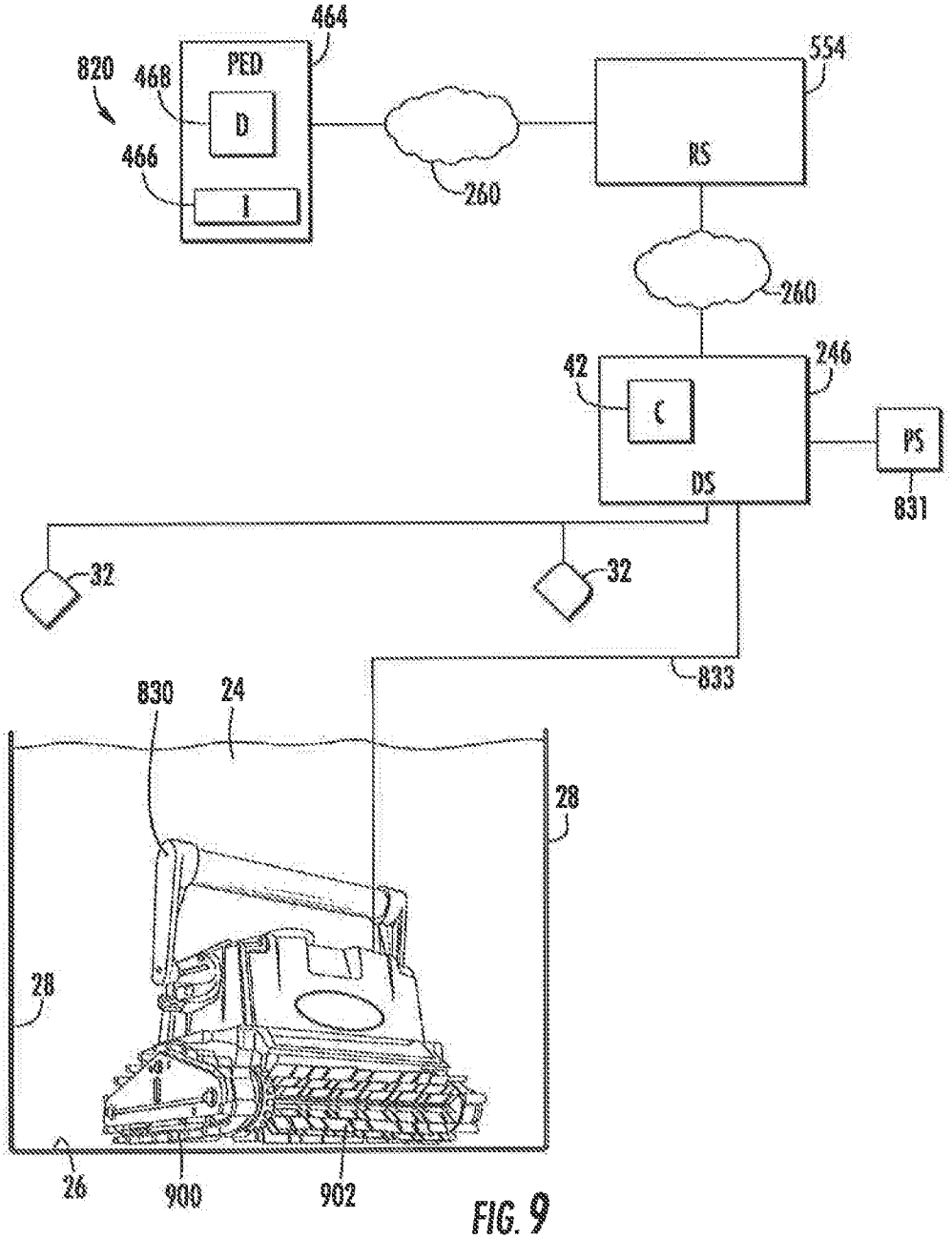
464
820
468
PED
D
466
I
260
554
RS
260
42
246
C
DS
PS
831
32
32
833
830
24
28
28
26
900
902

FIG. 9

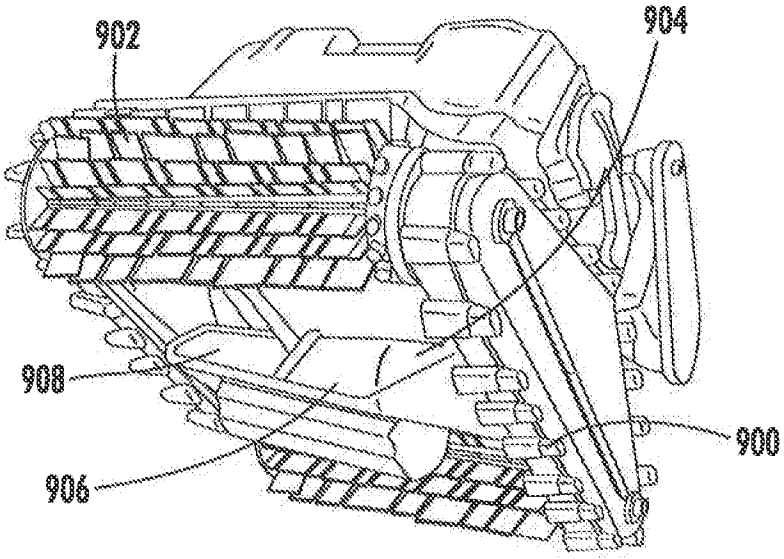

FIG. 10

Electronic Patent Application Fee Transmittal

Application Number:	
Filing Date:	
Title of Invention:	POOL CLEANING SYSTEM AND METHOD TO AUTOMATICALLY CLEAN SURFACES OF A POOL USING IMAGES FROM A CAMERA
First Named Inventor/Applicant Name:	Kameshwar DURVASULA
Filer:	Steven M. Hertzberg/Steven Ortiz
Attorney Docket Number:	214,790

Filed as Large Entity

Filing Fees for Utility under 35 USC 111(a)

Description	Fee Code	Quantity	Amount	Sub-Total in USD($)
Basic Filing:				
Utility application filing	1011	1	280	280
Utility Search Fee	1111	1	600	600
Utility Examination Fee	1311	1	720	720
Pages:				
Claims:				
Claims in Excess of 20	1202	2	80	160
Miscellaneous-Filing:				
Late Filing Fee for Oath or Declaration	1051	1	140	140

Description	Fee Code	Quantity	Amount	Sub-Total in USD($)
Petition:				
Patent-Appeals-and-Interference:				
Post-Allowance-and-Post-Issuance:				
Extension-of-Time:				
Miscellaneous:				
			Total in USD ($)	**1900**

Electronic Acknowledgement Receipt

EFS ID:	26314704
Application Number:	15207065
International Application Number:	
Confirmation Number:	6686
Title of Invention:	POOL CLEANING SYSTEM AND METHOD TO AUTOMATICALLY CLEAN SURFACES OF A POOL USING IMAGES FROM A CAMERA
First Named Inventor/Applicant Name:	Kameshwar DURVASULA
Customer Number:	38137
Filer:	Steven M. Hertzberg/Steven Ortiz
Filer Authorized By:	Steven M. Hertzberg
Attorney Docket Number:	214,790
Receipt Date:	11-JUL-2016
Filing Date:	
Time Stamp:	16:59:45
Application Type:	Utility under 35 USC 111(a)

Payment information:

Submitted with Payment	yes
Payment Type	Deposit Account
Payment was successfully received in RAM	$1900
RAM confirmation Number	4466
Deposit Account	010035
Authorized User	HERTZBERG, STEVEN

The Director of the USPTO is hereby authorized to charge indicated fees and credit any overpayment as follows:

File Listing:

Document Number	Document Description	File Name	File Size(Bytes)/ Message Digest	Multi Part /.zip	Pages (if appl.)
1	Application Data Sheet	214790_ADS.pdf	1836045 5fa0366fa3d64d87ba3773aa1cf0d893c008d7d1	no	8
Warnings:					
Information:					
2	Specification	214790_Specification.pdf	69076 a61f632391f0285db4c91c3c438a5b10662b61b3	no	17
Warnings:					
Information:					
3	Drawings-only black and white line drawings	214790_Drawings.pdf	164014 4ff1e5265c3177cef0f9cc1d2edeb0df9f1f82ee	no	4
Warnings:					
Information:					
4	Fee Worksheet (SB06)	fee-info.pdf	38674 11cddebb1371ffae7ff009178bc88332462952a7	no	2
Warnings:					
Information:					
			Total Files Size (in bytes):	2107809	

This Acknowledgement Receipt evidences receipt on the noted date by the USPTO of the indicated documents, characterized by the applicant, and including page counts, where applicable. It serves as evidence of receipt similar to a Post Card, as described in MPEP 503.

New Applications Under 35 U.S.C. 111
If a new application is being filed and the application includes the necessary components for a filing date (see 37 CFR 1.53(b)-(d) and MPEP 506), a Filing Receipt (37 CFR 1.54) will be issued in due course and the date shown on this Acknowledgement Receipt will establish the filing date of the application.

National Stage of an International Application under 35 U.S.C. 371
If a timely submission to enter the national stage of an international application is compliant with the conditions of 35 U.S.C. 371 and other applicable requirements a Form PCT/DO/EO/903 indicating acceptance of the application as a national stage submission under 35 U.S.C. 371 will be issued in addition to the Filing Receipt, in due course.

New International Application Filed with the USPTO as a Receiving Office
If a new international application is being filed and the international application includes the necessary components for an international filing date (see PCT Article 11 and MPEP 1810), a Notification of the International Application Number and of the International Filing Date (Form PCT/RO/105) will be issued in due course, subject to prescriptions concerning national security, and the date shown on this Acknowledgement Receipt will establish the international filing date of the application.