PTO/AIA/15 (10-17)
Approved for use through 11/30/2020. OMB 0651-0032
U.S. Patent and Trademark Office; U.S. DEPARTMENT OF COMMERCE
Under the Paperwork Reduction Act of 1995 no persons are required to respond to a collection of information unless it displays a valid OMB control number.

UTILITY PATENT APPLICATION TRANSMITTAL

(Only for new nonprovisional applications under 37 CFR 1.53(b))

Attorney Docket No.	061223-1141487
First Named Inventor	Kameshwar Durvasula
Title	Pool Cleaning System and Method to Automatically Clean Surfaces of a Pool Using Im
Priority Mail Express® Label No.	Via EFS-Web

APPLICATION ELEMENTS

See MPEP chapter 600 concerning utility patent application contents.

ADDRESS TO: **Commissioner for Patents**
P.O. Box 1450
Alexandria, VA 22313-1450

1. [✔] **Fee Transmittal Form** (PTO/SB/17 or equivalent)
2. [ ] **Applicant asserts small entity status.** See 37 CFR 1.27
3. [ ] **Applicant certifies micro entity status.** See 37 CFR 1.29. Applicant must attach form PTO/SB/15A or B or equivalent.
4. [✔] **Specification** [*Total Pages* 18] Both the claims and abstract must start on a new page. *(See MPEP § 608.01(a) for information on the preferred arrangement)*
5. [✔] **Drawing(s)** (35 U.S.C. 113) [*Total Sheets* 4]
6. **Inventor's Oath or Declaration** [*Total Pages* 2] *(including substitute statements under 37 CFR 1.64 and assignments serving as an oath or declaration under 37 CFR 1.63(e))*
   a. [ ] Newly executed (original or copy)
   b. [✔] A copy from a prior application (37 CFR 1.63(d))
7. [✔] **Application Data Sheet** ** See note below.* See 37 CFR 1.76 (PTO/AIA/14 or equivalent)
8. **CD-ROM or CD-R** in duplicate, large table, or Computer Program (*Appendix*)
   [ ] Landscape Table on CD
9. **Nucleotide and/or Amino Acid Sequence Submission** (*if applicable, items a. – c. are required*)
   a. [ ] Computer Readable Form (CRF)
   b. [ ] Specification Sequence Listing on:
      i. [ ] CD-ROM or CD-R (2 copies); or
      ii. [ ] Paper
   c. [ ] Statements verifying identity of above copies

ACCOMPANYING APPLICATION PAPERS

10. [ ] **Assignment Papers** (cover sheet & document(s))
    Name of Assignee _____
11. [ ] **37 CFR 3.73(c) Statement** (*when there is an assignee*) [✔] **Power of Attorney**
12. [ ] **English Translation Document** (*if applicable*)
13. [ ] **Information Disclosure Statement** (PTO/SB/08 or PTO-1449)
    [ ] Copies of citations attached
14. [✔] **Preliminary Amendment**
15. [ ] **Return Receipt Postcard** (*MPEP § 503*) (*Should be specifically itemized*)
16. [ ] **Certified Copy of Priority Document(s)** (*if foreign priority is claimed*)
17. [ ] **Nonpublication Request** Under 35 U.S.C. 122(b)(2)(B)(i). Applicant must attach form PTO/SB/35 or equivalent.
18. [ ] **Other:** _____

***Note**: (1) Benefit claims under 37 CFR 1.78 and foreign priority claims under 1.55 **must** be included in an Application Data Sheet (ADS).
(2) For applications filed under 35 U.S.C. 111, the application must contain an ADS specifying the applicant if the applicant is an assignee, person to whom the inventor is under an obligation to assign, or person who otherwise shows sufficient proprietary interest in the matter. See 37 CFR 1.46(b).

19. CORRESPONDENCE ADDRESS

[✔] The address associated with Customer Number: 23370 **OR** [ ] Correspondence address below

Name					
Address					
City		State		Zip Code	
Country		Telephone		Email	

Signature	/Dean W. Russell/	Date	20 May 2019
Name (Print/Type)	Dean W. Russell	Registration No. (Attorney/Agent)	33452

This collection of information is required by 37 CFR 1.53(b). The information is required to obtain or retain a benefit by the public which is to file (and by the USPTO to process) an application. Confidentiality is governed by 35 U.S.C. 122 and 37 CFR 1.11 and 1.14. This collection is estimated to take 12 minutes to complete, including gathering, preparing, and submitting the completed application form to the USPTO. Time will vary depending upon the individual case. Any comments on the amount of time you require to complete this form and/or suggestions for reducing this burden, should be sent to the Chief Information Officer, U.S. Patent and Trademark Office, U.S. Department of Commerce, P.O. Box 1450, Alexandria, VA 22313-1450. DO NOT SEND FEES OR COMPLETED FORMS TO THIS ADDRESS. **SEND TO: Commissioner for Patents, P.O. Box 1450, Alexandria, VA 22313-1450.**
If you need assistance in completing the form, call 1-800-PTO-9199 and select option 2.

Privacy Act Statement

The **Privacy Act of 1974 (P.L. 93-579)** requires that you be given certain information in connection with your submission of the attached form related to a patent application or patent. Accordingly, pursuant to the requirements of the Act, please be advised that: (1) the general authority for the collection of this information is 35 U.S.C. 2(b)(2); (2) furnishing of the information solicited is voluntary; and (3) the principal purpose for which the information is used by the U.S. Patent and Trademark Office is to process and/or examine your submission related to a patent application or patent. If you do not furnish the requested information, the U.S. Patent and Trademark Office may not be able to process and/or examine your submission, which may result in termination of proceedings or abandonment of the application or expiration of the patent.

The information provided by you in this form will be subject to the following routine uses:

1. The information on this form will be treated confidentially to the extent allowed under the Freedom of Information Act (5 U.S.C. 552) and the Privacy Act (5 U.S.C 552a). Records from this system of records may be disclosed to the Department of Justice to determine whether disclosure of these records is required by the Freedom of Information Act.
2. A record from this system of records may be disclosed, as a routine use, in the course of presenting evidence to a court, magistrate, or administrative tribunal, including disclosures to opposing counsel in the course of settlement negotiations.
3. A record in this system of records may be disclosed, as a routine use, to a Member of Congress submitting a request involving an individual, to whom the record pertains, when the individual has requested assistance from the Member with respect to the subject matter of the record.
4. A record in this system of records may be disclosed, as a routine use, to a contractor of the Agency having need for the information in order to perform a contract. Recipients of information shall be required to comply with the requirements of the Privacy Act of 1974, as amended, pursuant to 5 U.S.C. 552a(m).
5. A record related to an International Application filed under the Patent Cooperation Treaty in this system of records may be disclosed, as a routine use, to the International Bureau of the World Intellectual Property Organization, pursuant to the Patent Cooperation Treaty.
6. A record in this system of records may be disclosed, as a routine use, to another federal agency for purposes of National Security review (35 U.S.C. 181) and for review pursuant to the Atomic Energy Act (42 U.S.C. 218(c)).
7. A record from this system of records may be disclosed, as a routine use, to the Administrator, General Services, or his/her designee, during an inspection of records conducted by GSA as part of that agency's responsibility to recommend improvements in records management practices and programs, under authority of 44 U.S.C. 2904 and 2906. Such disclosure shall be made in accordance with the GSA regulations governing inspection of records for this purpose, and any other relevant (*i.e.*, GSA or Commerce) directive. Such disclosure shall not be used to make determinations about individuals.
8. A record from this system of records may be disclosed, as a routine use, to the public after either publication of the application pursuant to 35 U.S.C. 122(b) or issuance of a patent pursuant to 35 U.S.C. 151. Further, a record may be disclosed, subject to the limitations of 37 CFR 1.14, as a routine use, to the public if the record was filed in an application which became abandoned or in which the proceedings were terminated and which application is referenced by either a published application, an application open to public inspection or an issued patent.
9. A record from this system of records may be disclosed, as a routine use, to a Federal, State, or local law enforcement agency, if the USPTO becomes aware of a violation or potential violation of law or regulation.

POOL CLEANING SYSTEM AND METHOD TO AUTOMATICALLY CLEAN SURFACES OF A POOL USING IMAGES FROM A CAMERA

CROSS-REFERENCE TO RELATED APPLICATION

[001] This patent application is a continuation of commonly owned U.S. Patent Application serial number 15/207,065, filed July 11, 2016, which is a continuation of U.S. Patent Application serial number 13/545,918, filed July 10, 2012 (now US Pat. No. 9,388,595), the content of which are incorporated by reference herein in their entirety.

BACKGROUND

[002] Manually cleaning the floor and sides of a swimming pool may be a tedious and time-consuming task. As a result, automated robotic pool cleaners have been developed. However, controlling and monitoring such automated robotic pool cleaners to insure that all portions of the pool surfaces are satisfactorily cleaned remains a challenge.

SUMMARY OF THE INVENTION

[003] The disadvantages heretofore associated with the prior art are overcome by the present invention of a pool cleaning system for cleaning debris from a submerged surface of a swimming pool comprising: a self-propelled pool cleaner having rotatably-mounted supports for supporting and guiding the cleaner on the pool surface; a filter configured to retain the debris collected from the submerged surface of the swimming pool; an electric motor for enabling the rotation of the rotatably-mounted supports on the pool surface; at least one camera to capture imagery of the pool surface; a controller, in electronic communication with the at least one camera, to determine a cleanliness characteristic of the pool surface on which the cleaner has passed based on the camera imagery and generate a control signal to direct movement of the cleaner based on the cleanliness characteristic of the pool surface; and a portable electronic device is configured to present a graphic on a display, the graphic depicting the submerged surface of the pool and those portions of the surface that remain uncleaned as the cleaner traverses the pool surface.

[004] In one aspect, the at least one camera is carried by the cleaner. In another aspect, the controller is carried by the cleaner. In still another aspect, the electric motor is mechanically connected to at least one of the rotatably-mounted supports.

WYBOTICS EX1009
Wybotics v. Zodiac
Page 003

[005] In yet another aspect, the controller is operable to execute one or more cleaning programs for cleaning the submerged surfaces of the pool. In one aspect, the control signal causes the cleaner to drive in a direction to clean a portion of the pool surface based on the cleanliness characteristic of the pool surface. Alternatively, the control signal causes the cleaner to steer in a direction to clean a portion of the pool surface based on the cleanliness characteristic of the pool surface. In another aspect, the control signal causes the cleaner to drive in a direction to re-clean a portion of the pool surface over which the cleaner has passed. Alternatively, the control signal causes the cleaner to steer in a direction to re-clean a portion of the pool surface over which the cleaner has passed.

[006] In one aspect, the captured imagery from the at least one camera is digitally processed by the controller to determine the cleanliness characteristic of the pool surface. Alternatively, the captured imagery from the at least one camera is digitally processed by a remote processor to determine the cleanliness characteristic of the pool surface.

[007] In another aspect, the system further comprises a dry station located remotely from the cleaner and in communication with the cleaner, wherein the dry station includes the controller. Alternatively, the system further comprises a dry station located remotely from the cleaner and in communication with the cleaner, wherein the controller is located remotely from the cleaner and the dry station. In still another aspect, the controller controls electric power provided to the electric motor.

[008] In one aspect, the control signal causes the cleaner to move in a direction of a portion of the pool surface to be cleaned based solely upon signals received from the camera. In another aspect, the control signal causes the cleaner to drive in a direction to clean a portion of the pool surface based on the cleanliness characteristic of the pool surface. Alternatively, the control signal causes the cleaner to steer in a direction to clean a portion of the pool surface based on the cleanliness characteristic of the pool surface. In yet another aspect, the control signal causes the cleaner to drive in a direction to re-clean a portion of the pool surface over

WYBOTICS EX1009
Wybotics v. Zodiac
Page 004

which the cleaner has passed. Alternatively, the control signal causes the cleaner to steer in a direction to re-clean a portion of the pool surface over which the cleaner has passed.

BRIEF DESCRIPTION OF THE DRAWINGS

[009] FIG. 1 is a schematic illustration of an example pool cleaning system.

[0010] FIG. 2 is a schematic illustration of an implementation of the pool cleaning system of FIG. 1.

[0011] FIG. 3 is a schematic illustration of an implementation of the pool cleaning system of FIG. 1.

[0012] FIG. 4 is a schematic illustration of an implementation of the pool cleaning system of FIG. 1.

[0013] FIG. 5 is a schematic illustration of an implementation of the pool cleaning system of FIG. 1.

[0014] FIG. 6 is a flow diagram of an example method that may be carried out with the pool cleaning system of FIG. 2-5.

[0015] FIG. 7 is a plan view of an example display with an example graphical depiction.

[0016] FIG. 8 is a plan view of another example display with an example graphical depiction.

[0017] FIG. 9 is a schematic illustration of an implementation of the pool cleaning system of FIG. 1 with an example pool cleaning vehicle.

[0018] FIG. 10 is a bottom perspective view of the example pool cleaning vehicle of the system of FIG. 9.

DETAILED DESCRIPTION OF THE EXAMPLE EMBODIMENTS

[0019] FIG. 1 schematically illustrates an example pool cleaning system 20. As schematically shown by FIG. 1, pool cleaning system 20 is adapted to clean submerged surfaces of a pool 22 containing a liquid 24. In particular, pool cleaning system 20 is adapted to clean at least a bottom or floor surface 26 of the pool 22 and possibly to additionally clean surfaces 28 of pool 22. As will be described hereafter, pool cleaning system facilitates the control and monitoring of a robotic pool cleaner to better assure that all portions of pool 22 are satisfactorily cleaned.

WYBOTICS EX1009
Wybotics v. Zodiac
Page 005

[0020] Pool cleaning system 20 comprises vehicle 30, cameras 32 and controller 42. Vehicle 30 comprises an automated powered device configured to travel adjacent to submerged or water containing surfaces of pool 20 (such as floor 26 and/or side surfaces 28) while cleaning such surfaces. In one implementation, vehicle 30 may include vacuum or suction devices, a liquid circulation system and a filter to draw debris, such as bacterial growth or plant growth, from such pool surfaces, wherein the drawn liquid containing such residue or foreign matter is filtered to collect the debris. In other implementations, vehicle30 may not collect such debris, wherein vehicle 30 merely loosens such debris on the pool surfaces such that the loosened or separated debris may be subsequently removed using the existing liquid filtering system of pool 22.

[0021] To assist in the loosening of debris, in one implementation, vehicle 30may additionally include a chemical dispenser to closely apply pool cleaning chemicals to the pool surfaces as the vehicle 30 traverses such surfaces. In one implementation, vehicle 30 may additionally or alternatively include one or more scrubbing members, such as active (driven) or passive (undriven or idling) brushes, to assist in the removal of residue or foreign matter from such pool surfaces. In yet another implementation, vehicle 30 may additionally or alternatively include liquid jets to assist in the loosening of debris.

[0022] To move along the submerged surfaces of pool 22, vehicle 30 includes one or more propulsion mechanisms. In one implementation, vehicle 30is propelled along the submerged pool surfaces using wheels, rollers, tracks or other surface contacting members powered by a motor and the like. Such wheels, rollers or tracks may themselves include the scrubbing members used to clean the surfaces. In one implementation vehicle 30 may also alternatively be propelled by means of the vacuum or liquid jets. The vacuum or liquid jets used for such propulsion nozzle facilitate loosening of debris for collection by vehicle 30. In other implementations, vehicle 30 may include other propulsion mechanisms.

[0023] Cameras 32 comprise devices configured to capture video or time lapse images of pool 22. In the example illustrated, cameras 32 are mounted on structures external to pool 22. In other words, cameras 32 are not submerged. In other implementations, cameras 32 may alternatively be mounted to vehicle 30. In the example illustrated, cameras 32 capture movement of vehicle 30 while vehicle 30 is submerged within pool 22. In other implementations, cameras 32 merely capture images of submerged surfaces 26, 28 of pool 22.

WYBOTICS EX1009
Wybotics v. Zodiac
Page 006

[0024] In the example illustrated, cameras 32 comprise cameras serving as part of a home or pool security system, wherein such cameras detect the presence of a person at pool 22 satisfying a predefined characteristic and wherein an alert is output upon the person's detected presence. For example, in one implementation, cameras 32 are utilized as part of a security system that detects when a person below a predefined age, such as a child, is present at pool 22 without a detected presence of a recognized adult. In another implementation, cameras 32 may detect the presence of an unauthorized person or intruder at pool 22. Identification of the person may be achieved by an off-site human or computerized monitoring system, wherein signals from cameras 32 are transmitted across a wide area network or may be achieved with software of controller 42 which includes facial recognition or other identification programming.

[0025] Because pool cleaning system 20 utilizes pre-existing cameras 32 provided as part of a security system or shares the use of cameras 32 with such a home or pool security system, pool cleaning system 20 is easier to set up, less complex and less expensive. In other implementations, pool cleaning system 20 may utilize dedicated cameras 22 independent of any cameras associated with a home, facility or pool security system. In such an alternative system, cameras 32 may be more precisely focused upon pool 22 and surfaces 26, 28 while also including appropriate lenses or modifications to account for glare, refraction and the like to better facilitate the capture of surfaces and vehicle 30 which are submerged.

[0026] Controller 42 comprises one or more processing units in communication with vehicle 30 and cameras 32. For purposes of this application, the term "processing unit" shall mean a presently developed or future developed processing unit that executes sequences of instructions contained in a memory. Execution of the sequences of instructions causes the processing unit to perform steps such as generating control signals. The instructions may be loaded in a random access memory (RAM) for execution by the processing unit from a read only memory (ROM), a mass storage device, or some other persistent storage. In other embodiments, hard wired circuitry may be used in place of or in combination with software instructions to implement the functions described. For example, controller 42 may be embodied as part of one or more application-specific integrated circuits (ASICs). Unless otherwise specifically noted, the controller is not limited to any specific combination of hardware circuitry and software, nor to any particular source for the instructions executed by the processing unit.

WYBOTICS EX1009
Wybotics v. Zodiac
Page 007

[0027] In one implementation, controller 42 communicates with vehicle 30 and cameras 32 entirely across a wired connection. In another implementation, controller 42 communicates with vehicle 30 and cameras 32 across a wireless connection, such as cross a local area network (LAN) or a wide area network (WAN) such as the Internet. One of limitation, controller 42 may communicate with vehicle 30 and cameras 32 using a combination of both wired and wireless communication connections.

[0028] Controller 42 is configured to generate control signals for steering vehicle 30 based upon signals received from cameras 32. In one implementation, controller 42 provides the sole steering directions for vehicle 30 using signals from cameras 32. Because vehicle 30 is precisely steered under the control of controller 42, rather than traveling in a random manner, entire summer surfaces of pool 22 may be more quickly and efficiently covered and cleaned. Because controller 42 provides the only steering instructions for vehicle 30 and utilizes signals from cameras 32, complex steering algorithms or codes in either vehicle 30 or controller 42 may be omitted to reduce complexity and cost of system 20.

[0029] In another implementation, vehicle 30 may cover or travel across surfaces of pool 22 in either a random fashion or according to an automated pool coverage algorithm or pool coverage pattern stored in a memory associated with vehicle 30 or controller 42. In such an implementation, controller 42 utilizes signals from cameras 32 to verify that all of the surfaces of pool 22 have been cleaned, that no spots have been missed. Upon identifying a missed spot, controller 42 utilizes signals from camera 32 to steer vehicle 32 over such missed portions of surfaces 26, 28. According to one example, controller 42 not only uses signals from camera 32 to determine whether any portions of surfaces 26, 28 have been missed entirely, but to also determine whether any portions of surfaces 26,28 have been cleaned, but not to a satisfactory degree or extent. In such circumstances, controller 42 uses signals from cameras 32 to steer vehicle 34 such areas to re-clean such portions until such portions have been satisfactorily cleaned such that the portions have a cleanliness characteristic satisfying a predefined threshold.

[0030] FIG. 2 schematically illustrates pool cleaning system 120, the particular example of pool cleaning system 20 described above. Pool cleaning system 120 is similar to pool cleaning system 20 except that pool cleaning system 120 additionally comprises dry station 46 and display 50. Those remaining components of pool cleaning system 120 which correspond to components of pool cleaning system 20 are numbered similarly.

WYBOTICS EX1009
Wybotics v. Zodiac
Page 008

[0031] Dry station 46 comprises a station in communication with vehicle 30 and cameras 32 outside of pool 22. Dry station 46 incorporates controller 42. In one implementation, dry station 46 communicates with vehicle 30 in a wired fashion. In such an implementation, dry station 46 further provides electrical power to vehicle 30 in a wired fashion. Dry station 46 communicates with cameras 32 and either a wired or wireless fashion.

[0032] Display 50 comprises a device to present a graphical images and text on a display screen. In one implementation, display 58 may be incorporated as part of dry station 46. In another implementation, display 50 may be provided on a portable electronic device, a computer, a television and the like. Display 50 is utilized by pool cleaning system 120 to present information regarding the cleaning of pool 22 to facilitate control of vehicle 30 by controller 42. In one implementation, display 50 is utilized by pool cleaning system 120 and a controller 42 to present a graphical depiction of those portions of surfaces 26, 28 of pool 22 have not been satisfactorily cleaned so as to satisfy a predefined cleanliness characteristic threshold. Such portions may comprise portions that have been completely missed by vehicle 30 as well as those portions that have been covered by vehicle 30 but have not been satisfactorily cleaned with the given number of passes of vehicle 30 or the existing cleaning settings of vehicle 30. The graphical depiction presented on display 50 enables a person view the quality of the prior cleaning session and to input commands causing controller 42 to generate control signals using signals from camera 32 to steer vehicle 30 back to such identified portions where such portions may be cleaned at the same or elevated cleaning aggressiveness settings.

[0033] Another implementation, display 50 may be further utilized by controller 42 to depict the progress of vehicle 30 in cleaning pool 22. Such a display 50 allows a person to visually determine how much of the pool has been currently cleaned and to estimate the remaining time before the pool cleaning task is completed. In certain circumstances, using display 50, a person may adjust a setting of vehicle 30 to accelerate a rate at which surfaces 26, 20 of pool 22 are cleaned to meet an earlier desired completion time for such pool cleaning.

[0034] FIG. 3 schematically illustrates pool cleaning system 220, another example implementation of pool cleaning system 20. Pool cleaning system 220 is similar to pool cleaning system 20 except that pool cleaning system 220 additionally comprises dry station 246, display 50, and remote server 254. Those remaining components of pool cleaning system 220 which

WYBOTICS EX1009
Wybotics v. Zodiac
Page 009

correspond to components of pool cleaning system 20 or pool cleaning system 120 are numbered similarly.

[0035] Dry station 246 is similar to dry station 46, described above, except that dry station 246 serves as a local interface for communication with controller 42 across a network 260. In one implementation, network 260 may comprise a local area network. In another implementation, network 260 may comprise a wide area network, such as the Internet. For example, in one implementation, dry station 246 may incorporate a modem. In one implementation, dry station 246 may communicate across a local area network to controller 42. In another implementation, dry station 246 may communicate through a router, across a local area network, to a local modem which communicates across a network 260. The example illustrated, dry station 246 further provides part of vehicle 30 across a wired cable or wired connection. Display 50 is described above with respect to system 120.

[0036] Remote server 254 comprises a server remote from dry station 246 which is in communication with dry station 246 across network 260. Remote server 254 includes controller 42. During operation, signals from cameras 32 are transmitted across dry station 246 across network 260 to controller 42 of remote server 254. Based upon such signals from cameras 32, controller 42 generates control signals which are transmitted back across network 260 and through dry station 246 to vehicle 30 to steer vehicle 30.

[0037] As shown by FIG. 3, remote server 254 and network 260 may be shared as part of other pool cleaning systems 320, wherein controller 42 generates control signals for steering the pool cleaning vehicle 30 of system 320 based upon signals from cameras 32 transmitted across dry station 246 of system 320. In such an implementation, the cost and complexity of pool cleaning system 220 is reduced since controller 42 is remotely provided at remote server 254 which services multiple pool cleaning systems 220,320. Upgrades to controller 42 and its software are also more easily achieved for all pool cleaning systems to 20, 320 and their pools 22, 222 being serviced. In one implementation, the supervised cleaning, inspection and possible re-cleaning facilitated by the use of cameras 32may be provided as part of a subscription to users of vehicle 30. In such an implementation, a pool 22 having security cameras 32 may be upgraded with appropriate software or an appropriate software module added to dry station 246 to make a network connection with controller 42 which directs the security cameras 32 to capture vehicle 30 utilizes such signals for steering vehicle 30.

WYBOTICS EX1009
Wybotics v. Zodiac
Page 010

[0038] FIG. 4 schematically illustrates pool cleaning system 420, another particular implementation of pool cleaning system 20. Pool cleaning system 420 is similar to pool cleaning system 120 except that pool cleaning system 420 additionally comprises a portable electronic device 464. Those remaining components of pool cleaning system 420 which correspond to components of pool cleaning system 120 are numbered similarly.

[0039] Portable electronic device 464 comprises a portable handheld electronic device in communication with controller 42 and/or dry station 46 across network 260. Examples of such a portable electronic device (PED) 300 include, but are not limited to, a smart phone, a personal data assistant (PDA), laptop, notebook computer, tablet computer (e.g. IPAD) and MP3 player (e.g., IPOD TOUCH). In the example illustrated, PED 464 comprises input 466 and display 468.

[0040] Input 466 serves as a user interface for PED 464 by which inputs are made to PED 464. Input 466 facilitates entry of inputs or commands by a person to cause controller 42 to generate control signals varying the control of vehicle30. In one implementation, input 466 comprise a keyboard. In other implementations, input 466 may comprise a touchpad, a stylus, a microphone with associated speech recognition software or programming, a touch screen, buttons, switches and the like. In some implementations, input 466 may comprise a touch screen incorporated as part of display 468.

[0041] Display 468 comprises a user interface by which graphical or textual data is presented to a user. Display 468 may present the same or similar information as presented at dry station 246 by display 50 as described above. In one implementation, display 468 comprises a liquid crystal display. In other implementations, display 468 may comprise other types of display technology such as a light emitting diode display, an organic light emitting diode display (OLED), an electronic ink (e-ink) display or other types of display technology in present use or developed in the future. Although system 420 is illustrated as including controller 422 is part of dry station 46, in some implementations, controller 42 may alternatively be located as part of PED 464.

[0042] PED 464 enables a person located remote from pool 22 to monitor the progress of the cleaning of pool 22 by vehicle 30 of system 420. PED 464 provides a person with a graphical presentation (described above with respect to display 50) indicating those portions of surfaces 26, 28 of pool 22 that have been completed as well as those portions 26, 20 and that remain to be cleaned. The person may also be provided with a graphical indication of what portions need to be

WYBOTICS EX1009
Wybotics v. Zodiac
Page 011

re-cleaned to meet predetermined cleanliness thresholds. In the example illustrated, input 466 enables a person to enter commands or selections which are transmitted across network 260 to controller 42 to adjust operation of vehicle 30. For example, the path or route of vehicle 30 may be changed, the aggressiveness of the cleaning chemicals or mechanical cleaning devices may be adjusted, the speed at which vehicle 30 traverses surfaces 26, 28 may be adjusted. In response to such adjustment signals from PED 464, controller 42 may utilize signals from cameras 32 to adjust the steering of vehicle 30.

[0043] FIG. 5 schematically illustrates pool cleaning system 520, another example implementation of pool cleaning system 20. Pool cleaning system 520 is similar to pool cleaning system 420 except that pool cleaning system 520 additionally comprises a remote server 554. Those remaining components of pool cleaning system 520 which correspond to components of pool cleaning system 420 are numbered similarly.

[0044] Remote server 554 is similar to remote server 254 described above with respect to system 220. Remote server 554 comprises a server remote from dry station 246 which is in communication with dry station 246 across network 260. Remote server 254 includes controller 42. During operation, signals from cameras 32 are transmitted across dry station 246 across network 260 to controller 42 of remote server 254. Based upon such signals from cameras 32, controller 42 generates control signals which are transmitted back across network 260 and through dry station 246 to vehicle 30 to steer vehicle 30. Controller 42 further relays either the raw signals from camera 32or image signals generated based upon signals from cameras 32 to PED 464, wherein such images (described above) are presented on display 468. As noted above, PED may further receive commands through input 466, wherein such commands are transmitted to controller 42 which generates control signals that are ultimately transmitted to vehicle 30 for steering vehicle 30.

[0045] As with remote server 254, remote server 554 and network 260 may be shared as part of other pool cleaning systems 320 (shown in FIG. 3), wherein controller 42 generates control signals for steering the pool cleaning vehicle 30 of system 320 based upon signals from cameras 32 transmitted across dry station 246 of system 320. In such implementations, controller 42 of remote server 554 may interact with other PEDs 464. In such an implementation, the cost and complexity of pool cleaning system 220 is reduced since controller 42 is remotely provided at remote server 254 which services multiple pool cleaning systems 220, 320. Upgrades to

WYBOTICS EX1009
Wybotics v. Zodiac
Page 012

controller 42and its software are also more easily achieved for all pool cleaning systems to 20, 320 and their pools 22, 222being serviced. In one implementation, the supervised cleaning, inspection and possible re-cleaning facilitated by the use of cameras 32 may be provided as part of a subscription to users of vehicle 30. In such an implementation, a pool 22 having security cameras 32 may be upgraded with appropriate software or an appropriate software module added to dry station 246 to make a network connection with controller 42 which directs the security cameras 32 to capture vehicle 30 utilizes such signals for steering vehicle 30. As indicated by broken lines, in other implementations, the controller 42 for generating control signals steering vehicle 30 based upon signals from cameras 32 may alternatively be relocated in PED 464.

[0046] FIG. 6 is a flow diagram illustrating an example method 600 that may be carried out by any of systems 120-520. As indicated by step 602, cameras 32 capture images of pool cleaning by vehicle 30. As indicated by step 604, controller 42 obtain such signals from cameras 32 for the surfaces of pool 22 that have been cleaned. As indicated by step 606, controller 42 uses information gathered from the signals from cameras 32 to identify those portions of surfaces 26, 28 not satisfactorily cleaned—not satisfying a predefined cleanliness characteristic or measurement threshold. One example of a cleanliness characteristic measurement a threshold may be how well the color of a surface matches a predetermined desirable color for the pool surface (such as original color of the tile or surface). A surface that has been missed entirely by vehicle 30 during a pool cleaning session may be automatically deemed to not satisfy a predetermined cleanliness characteristic.

[0047] As indicated by step 608, based upon such determinations, controller 42 generates control signals resulting in the presentation of a graphical depiction of those portions of pool 22 that has not been satisfactorily cleaned. Such graphical representations or depictions may be presented on display 50 or display 468. FIGS. 7 and 8 illustrate examples of graphical depictions that may be presented.

[0048] FIG. 7 illustrates display 468 presenting graphical depiction 620. Graphical depiction 620 comprises a first graphic 622 having a first portion 624 representing sides or walls 28 of pool 22 and a second portion 626 representing the floor 26 of pool 22. Graphical depiction 620 further comprises a moving icon 628 representing the current positioning of vehicle 30. In one implementation, the path of vehicle 30 may additionally be depicted by icon 628 shown in broken lines. As shown by FIG. 7, those portions 632 of surfaces 26, 28 of pool 22 (shown in

WYBOTICS EX1009
Wybotics v. Zodiac
Page 013

FIG. 1) over which of vehicle 30 has moved are identified by graphical depiction 620 either by color, markings or other various distinctive attributes. Likewise, those portions 634 of surfaces 26, 28 of pool 22 that have not been covered by vehicle 30 are identified by a distinct color col marking or distinctive attribute of depiction 620. As a result, a person may view the current position of vehicle 30, the extent to which pool 22 has been cleaned or covered by vehicle 30 and the extent of pool 22 that remains to be cleaned. In the example illustrated, depiction 620 further identifies those portions 638 of surfaces 26, 28 that have been cleaned, but which have not been cleaned to a satisfactory degree or extent. In one implementation, portions 638 may be identified by colors, brightness, markings or other visually distinctive attributes that are visually distinct from both portions 632 and portions 634. In other implementations, portions 638 may have the same characteristic of portions 634. In yet other implementations, different portions 638 may have different visual attributes depending upon a degree to which such clean portions have failed to satisfy the predefined cleanliness characteristic threshold. In some implementations, different port 638 may have different visual attributes depending upon different cleaning strategies that may be recommended for the different portions 638. For example, controller 42 may determine and recommend a first cleaning strategy (a first chemical solution jetted at a first rate and scrubbed at a first rate) with respect to a first portion 638 and may recommend a second different cleaning strategy (a second chemical solution jetted at a second rate is about a second rate) with respect to a second portion 638, wherein the different cleaning strategies are represented by different visual attributes presented in depiction 620.

[0049] FIG. 8 illustrates display 468 presenting a graphical depiction 720. Graphical depiction 720 comprises a first graphic 622 having a first portion 624 representing sides or walls 28 of pool 22 and a second portion 626 representing the floor 26 of pool 22 (shown in FIG. 1). Graphical depiction 720 is similar to graphical depiction 620 except that graphical depiction 720 omits icon 628 presenting vehicle 30. Like depiction 620, depiction 720 graphically depicts those portions 632 of surfaces 26, 28 over which vehicle 30 has traveled while in a cleaning mode. Depiction 720 also visually depicts those portions 634 that have not been covered by vehicle 30 in the cleaning mode and those portions 638 over which vehicle 30 has traveled while in the cleaning mode, but which have not been cleaned to a satisfactory degree. As illustrated in FIG. 8, different portions 638 may be visibly distinguished from one another through color, text or markings indicating either differences in the cleanliness of such portions 638 or indicating

WYBOTICS EX1009
Wybotics v. Zodiac
Page 014

different recommended cleaning strategies or approaches that may be selected by a person using input 466 when vehicle 30 is steered back to such portions 638 for re-cleaning using signals from camera 32.

[0050] As indicated by step 610 of FIG. 6, controller 42 generates control signals steering vehicle 30 to re-clean portions of pool 22, such as portions 638. Such steering may be facilitated by using signals from cameras 32. As noted above, in some implementations, a person may be allowed choose a cleaning approach for a particular portion 638using input 466. The selection may be facilitated by visual inspection of the different visual attributes for the particular portion 638 provided by depiction 720 (or depiction 620). In some implementations, input 466 may additionally be utilized by a person to prioritize an order in which portions 638 are re-cleaned.

[0051] FIG. 9 illustrates pool cleaning system 820, an example implementation of pool cleaning system 20. Pool cleaning system 820 is similar to pool cleaning system 520 except the pool cleaning system 820 located controller 42 in dry station 246 and includes pool cleaning vehicle 830, a specific example of vehicle 30. As shown by FIG. 9, in addition to transmitting control signals generated by controller 42 to vehicle 830, dry station 246 further transmits power from power source 831 through a power line or power cable 833 to vehicle 830. In the example illustrated, data communication and communication of control signals, also occurs across wired connections within or alongside the same line 833. In the example illustrated, remote server 554 serves as a communication link by which upgrades to controller 42 may be implemented across a wide number of pool cleaning systems and by which information from controller 42 is conveyed to one or more portable electronic devices 464 across network 260.

[0052] Vehicle 830 comprises a robotic or automated pool cleaning device. Vehicle 830 comprises a self-contained onboard filtration system with drive and pump motors. Vehicle 830 utilizes an internal microprocessor guided drive motor to systematically clean surfaces of pool 22. As shown by FIGS. 9 and 10, vehicle 830 utilizes a toothed track drive 900 provide traction and propulsion for vehicle 30. Vehicle 830 comprises rotating brushes 902 to loosen waterline buildup and breakdown large debris while power washing jets 904 flush out dirt from pores, seems in corners where brushes 902 may not be able to reach. The loosened dirt and debris is vacuumed through off-center vacuum ports 906 which passes the vacuumed debris through internally house filter bag. In the example illustrated, vehicle 830 further comprises rollers 908

WYBOTICS EX1009
Wybotics v. Zodiac
Page 015

which inhibit vehicle 830 from becoming impeded or stuck on raised drains or pop-up heads. Although illustrated as being employed with system 820, vehicle 830 may also be utilized with any of systems 20, 120, 220, 320 and 420. In other implementations, other robotic or automated pool cleaning vehicles may be utilized.

[0053] Although the present disclosure has been described with reference to example embodiments, workers skilled in the art will recognize that changes may be made in form and detail without departing from the spirit and scope of the claimed subject matter. For example, although different example embodiments may have been described as including one or more features providing one or more benefits, it is contemplated that the described features may be interchanged with one another or alternatively be combined with one another in the described example embodiments or in other alternative embodiments. Because the technology of the present disclosure is relatively complex, not all changes in the technology are foreseeable. The present disclosure described with reference to the example embodiments and set forth in the following claims is manifestly intended to be as broad as possible. For example, unless specifically otherwise noted, the claims reciting a single particular element also encompass a plurality of such particular elements.

WYBOTICS EX1009
Wybotics v. Zodiac
Page 016

What is claimed is:

1. A pool cleaning system for cleaning debris from a submerged surface of a swimming pool comprising:

a self-propelled pool cleaner having rotatably-mounted supports for supporting and guiding the cleaner on the pool surface;

a filter configured to retain the debris collected from the submerged surface of the swimming pool;

an electric motor for enabling the rotation of the rotatably-mounted supports on the pool surface;

at least one camera to capture imagery of the pool surface;

a controller, in electronic communication with the at least one camera, to determine a cleanliness characteristic of the pool surface on which the cleaner has passed based on the camera imagery and generate a control signal to direct movement of the cleaner based on the cleanliness characteristic of the pool surface; and

a portable electronic device configured to present a graphic on a display, the graphic depicting the submerged surface of the pool and those portions of the surface that remain uncleaned as the cleaner traverses the pool surface.

2. The system of claim 1, wherein the at least one camera is carried by the cleaner.

3. The system of claim 1, wherein the controller is carried by the cleaner.

4. The system of claim 1, wherein the electric motor is mechanically connected to at least one of the rotatably-mounted supports.

WYBOTICS EX1009
Wybotics v. Zodiac
Page 017

5. The system of claim 1, wherein the controller is operable to execute one or more cleaning programs for cleaning the submerged surfaces of the pool.

6. The system of claim 5, wherein the control signal causes the cleaner to drive in a direction to clean a portion of the pool surface based on the cleanliness characteristic of the pool surface.

7. The system of claim 5, wherein the control signal causes the cleaner to steer in a direction to clean a portion of the pool surface based on the cleanliness characteristic of the pool surface.

8. The system of claim 5, wherein the control signal causes the cleaner to drive in a direction to re-clean a portion of the pool surface over which the cleaner has passed.

9. The system of claim 5, wherein the control signal causes the cleaner to steer in a direction to re-clean a portion of the pool surface over which the cleaner has passed.

10. The system of claim 1, wherein the captured imagery from the at least one camera is digitally processed by the controller to determine the cleanliness characteristic of the pool surface.

11. The system of claim 1, wherein the captured imagery from the at least one camera is digitally processed by a remote processor to determine the cleanliness characteristic of the pool surface.

12. The system of claim 1 further comprising a dry station located remotely from the cleaner and in communication with the cleaner, wherein the dry station includes the controller.

13. The system of claim 1 further comprising a dry station located remotely from the cleaner and in communication with the cleaner, wherein the controller is located remotely from the cleaner and the dry station.

14. The system of claim 1, wherein the controller controls electric power provided to the electric motor.

15. The system of claim 1, wherein the control signal causes the cleaner to move in a direction of a portion of the pool surface to be cleaned based solely upon signals received from the camera.

16. The system of claim 15, wherein the control signal causes the cleaner to drive in a direction to clean a portion of the pool surface based on the cleanliness characteristic of the pool surface.

17. The system of claim 15, wherein the control signal causes the cleaner to steer in a direction to clean a portion of the pool surface based on the cleanliness characteristic of the pool surface.

18. The system of claim 15, wherein the control signal causes the cleaner to drive in a direction to re-clean a portion of the pool surface over which the cleaner has passed.

19. The system of claim 15, wherein the control signal causes the cleaner to steer in a direction to re-clean a portion of the pool surface over which the cleaner has passed.

ABSTRACT

[0054] A pool cleaning system for cleaning debris from a submerged surface of a swimming pool includes a self-propelled pool cleaner having rotatably-mounted supports for supporting and guiding the cleaner on the pool surface; an electric motor for enabling the rotation of the rotatably-mounted supports on the pool surface; at least one camera to capture imagery of the pool surface; a controller, in electronic communication with the at least one camera, to determine a cleanliness characteristic of the pool surface on which the cleaner has passed based on the camera imagery and generate a control signal to direct movement of the cleaner based on the cleanliness characteristic of the pool surface, and a portable electronic device configured to present a graphic on a display, the graphic depicting the submerged surface of the pool and those portions of the surface that remain uncleaned as the cleaner traverses the pool surface.

WYBOTICS EX1009
Wybotics v. Zodiac
Page 020

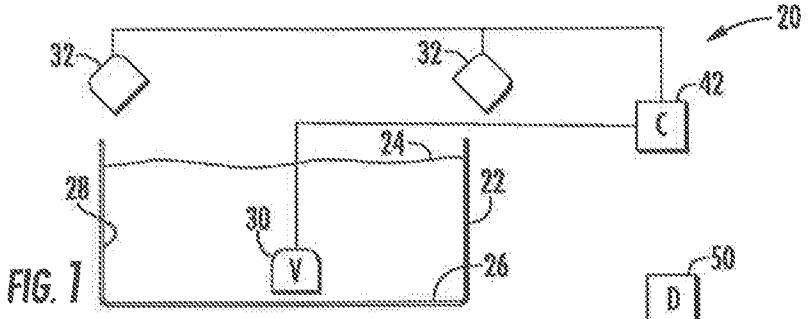

FIG. 1

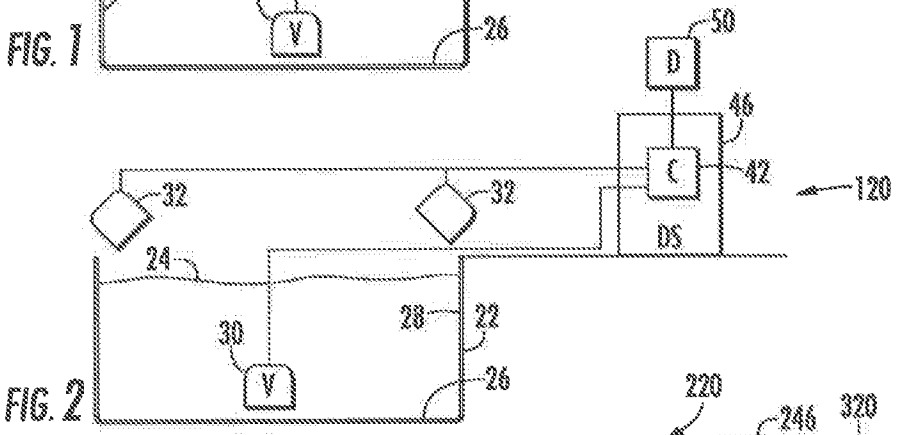

FIG. 2

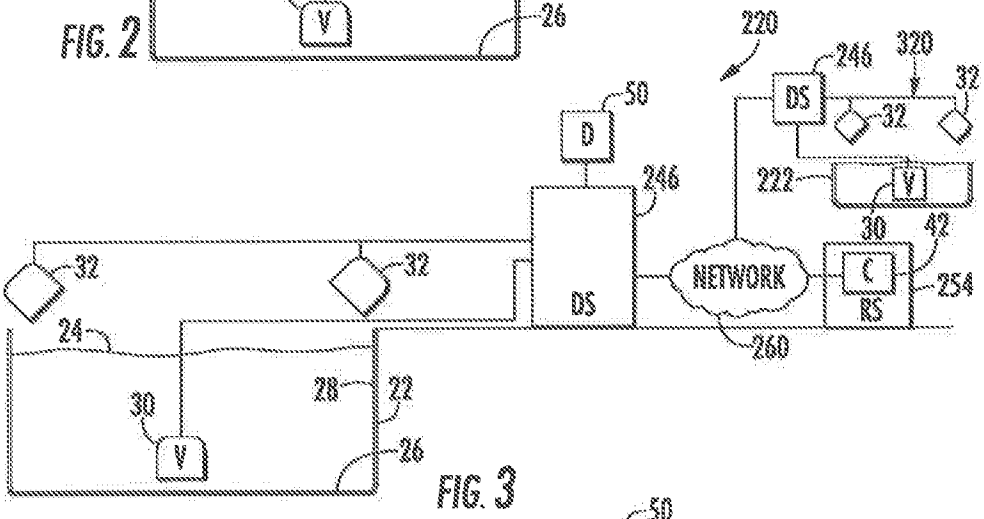

FIG. 3

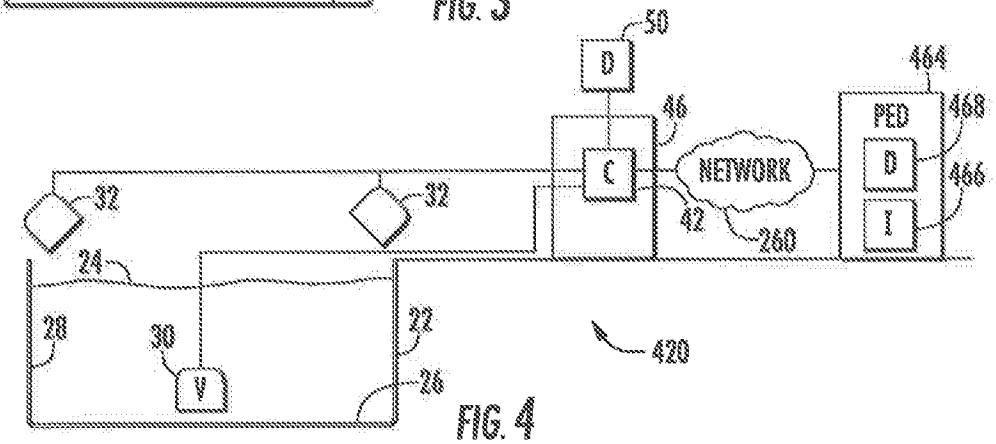

FIG. 4

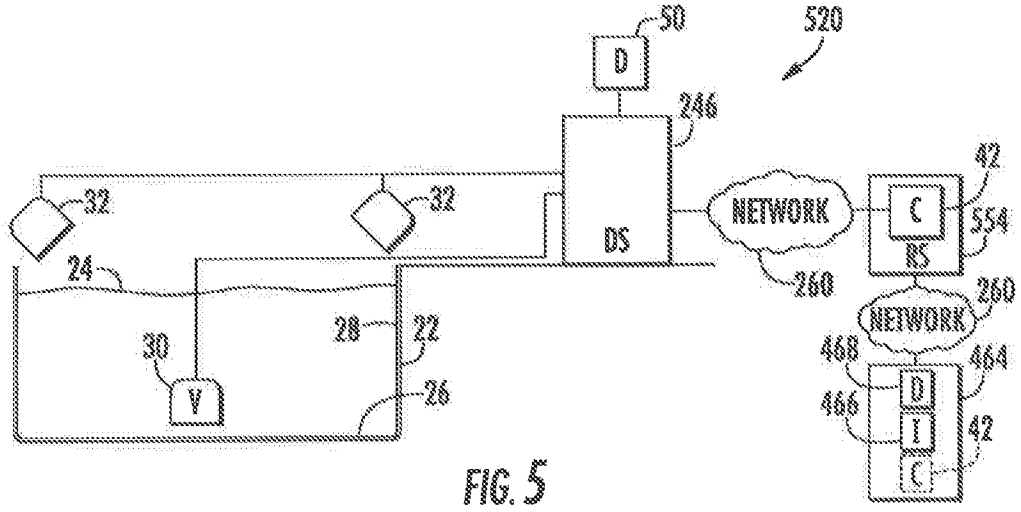

FIG. 5

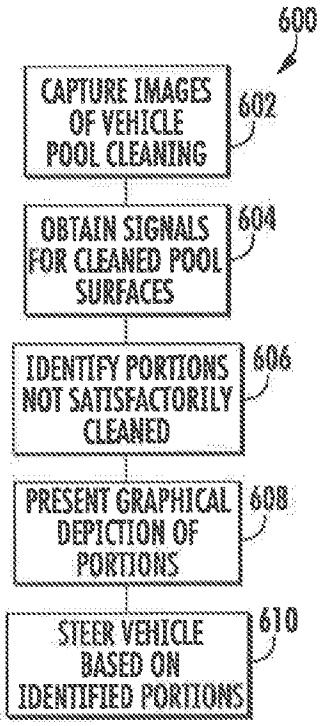

FIG. 6

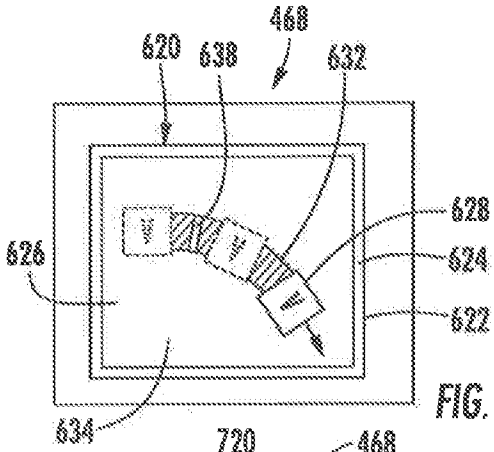

FIG. 7

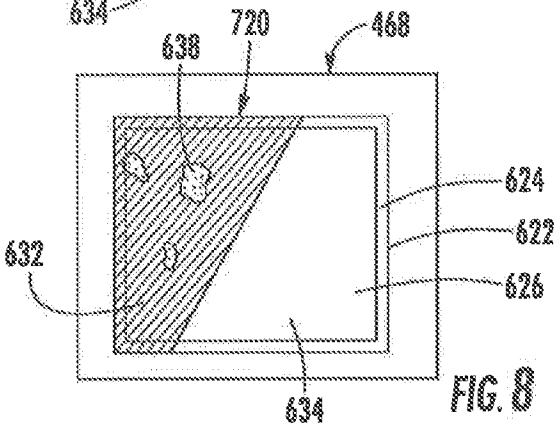

FIG. 8

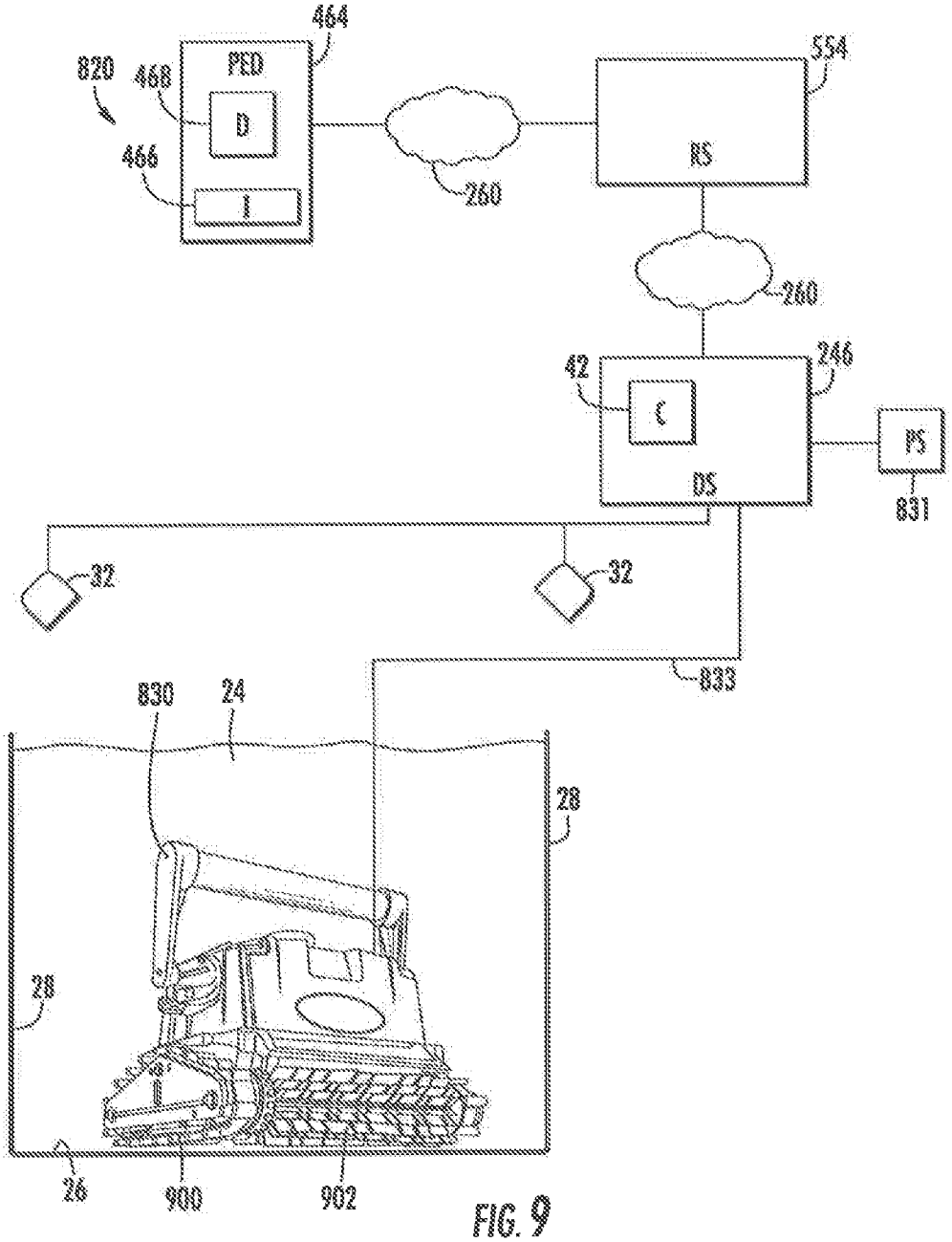
464
820
468
PED
D
466
I
260
554
RS
260
42
246
C
DS
PS
831
32
32
833
830
24
28
28
26
900
902

FIG. 9

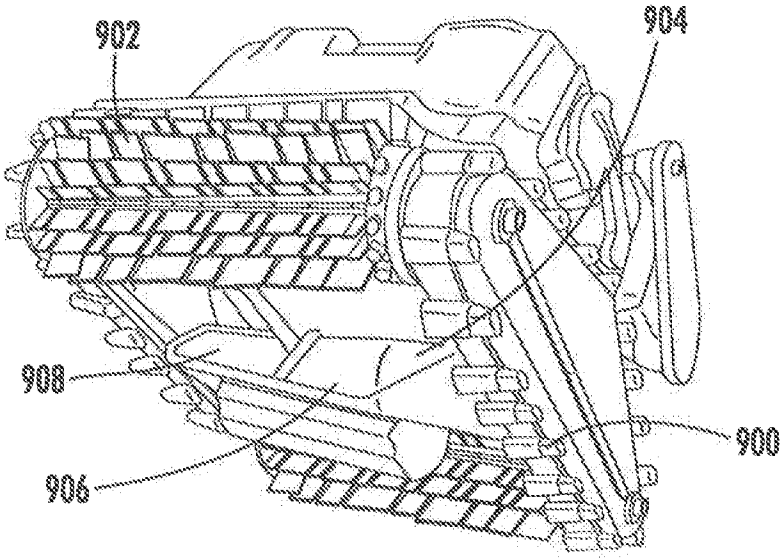

FIG. 10

UNITED STATES

DECLARATION FOR UTILITY AND DESIGN PATENT APPLICATIONS	Attorney Docket No.	214,790
	First Named Inventor	DURVASULA, Kameshwar
	Application No.	15/207,065
	Filing Date	July 11, 2016
	Art Unit	
	Examiner Name	

TITLE OF INVENTION: POOL CLEANING SYSTEM AND METHOD TO AUTOMATICALLY CLEAN SURFACES OF A POOL USING IMAGES FROM A CAMERA

As an inventor named below, I hereby declare that:
My residence, post office address and citizenship are as stated next to my name:
I believe that I am the original inventor (if only one name is listed below) or an original joint inventor (if multiple inventors are named below) of a claimed invention in the application.

This declaration is directed to:

CHECK APPROPRIATE BOX

[ ] the attached application, or

[X] United States application no. 15/207,065 or PCT International application no. _____
filed on July 11, 2016
and, if appropriate, an amendment filed on _____.

The above-identified application was made or authorized to be made by me.
I hereby authorize a patent attorney responsible for this application to complete this Declaration by the entry of the application number, application filing date, and attorney docket number, if necessary.

I hereby state that I have reviewed and understand the contents of the specification of the above-identified application, including the claims, as amended by any amendment referred to above.
I acknowledge my duty to disclose to the US Patent and Trademark Office all information known to me to be material to patentability as defined in 37 CFR 1.56, including for continuation-in-part applications, material information which became available between the filing date of the prior application and the national or PCT international filing date of the continuation-in-part application.
I hereby acknowledge that any willful false statement made in this declaration is punishable under 18 USC §1001 by fine or imprisonment of not more than five (5) years, or both.

Authorization To Permit Access To Application By Participating Office

If applicable, I hereby grant the USPTO authority to provide access to the above-identified patent application by the European Patent Office (EPO), the Japan Patent Office (JPO), the Korean Intellectual Property Office (KIPO), the World Intellectual Property Office (WIPO) and any other intellectual property offices in which a foreign application is filed claiming priority to the above-identified application. In accordance with 37 CFR §1.14(h)(3), access will be provided to prepare a copy of the above-identified patent application with respect to: (1) the above-identified patent application as filed; (2) any foreign application to which the above-identified patent application claims priority under 35 U.S.C.§119(a)-(d) if a copy of the foreign application that satisfies the certified copy requirement of 37 CFR§1.55 has been filed in the above-identified patent application; and (3) any US application as filed from which benefit is sought in the above-identified patent application. In accordance with 37 CFR§1.14(c), access may be provided to information concerning the date of the filing of this Authorization to Permit Access to Application by Participating Offices.

Direct Telephone Calls To:

ABELMAN, FRAYNE & SCHWAB
(212) 949-9022

Send Correspondence To:

The Address at Customer Number 38,137

I hereby declare that all statements made herein of my own knowledge are true and that all statements made on information and belief are believed to be true; and further that these statements were made with the knowledge that willful false statements and the like so made are punishable by fine or imprisonment of not more than five (5) years, or both under Section 1001 of Title 18 of the United States Code and that such willful false statements may jeopardize the validity of the application or any patent issued thereon.

DETAILS REQUIRED FOR EACH INVENTOR

Full Name of Sole or First Inventor	Inventor's Signature	Date
Kameshwar DURVASULA		14 July 2016
Residence		Citizenship
8 Holly Lane, Garfield, New Jersey 07026		US
Post Office Address		
Same as above		
Full Name of Second Joint Inventor, If Any	Inventor's Signature	Date
William Londono CORREA		14 July 2016
Residence		Citizenship
409 Beardsley Avenue, Bloomfield, New Jersey 07009		US
Post Office Address		
Same as above		
Full Name of Third Joint Inventor, If Any	Inventor's Signature	Date
Residence		Citizenship
Post Office Address		
Same as above		
Full Name of Fourth Joint Inventor, If Any	Inventor's Signature	Date
Residence		Citizenship
Post Office Address		
Full Name of Fifth Joint Inventor, If Any	Inventor's Signature	Date
Residence		Citizenship
Post Office Address		
Full Name of Sixth Joint Inventor, If Any	Inventor's Signature	Date
Residence		Citizenship
Post Office Address		
Full Name of Seventh Joint Inventor, If Any	Inventor's Signature	Date
Residence		Citizenship
Post Office Address		
Full Name of Eight Joint Inventor, If Any	Inventor's Signature	Date
Residence		Citizenship
Post Office Address		

PTO/AIA/14 (02-18)
Approved for use through 11/30/2020. OMB 0651-0032
U.S. Patent and Trademark Office; U.S. DEPARTMENT OF COMMERCE
Under the Paperwork Reduction Act of 1995, no persons are required to respond to a collection of information unless it contains a valid OMB control number.

Application Data Sheet 37 CFR 1.76	Attorney Docket Number	061223-1141487
	Application Number	
Title of Invention	POOL CLEANING SYSTEM AND METHOD TO AUTOMATIALLY CLEAN SURFACES OF A POOL USING IMAGES FROM A CAMERA	

The application data sheet is part of the provisional or nonprovisional application for which it is being submitted. The following form contains the bibliographic data arranged in a format specified by the United States Patent and Trademark Office as outlined in 37 CFR 1.76.
This document may be completed electronically and submitted to the Office in electronic format using the Electronic Filing System (EFS) or the document may be printed and included in a paper filed application.

Secrecy Order 37 CFR 5.2:

☐ Portions or all of the application associated with this Application Data Sheet may fall under a Secrecy Order pursuant to 37 CFR 5.2 (Paper filers only. Applications that fall under Secrecy Order may not be filed electronically.)

Inventor Information:

Inventor 1 Remove

Legal Name

Prefix	Given Name	Middle Name	Family Name	Suffix
	Kameshwar		Durvasula	

Residence Information (Select One) ● US Residency Non US Residency Active US Military Service

City	Garfield	State/Province	NJ	Country of Residence i	US

Mailing Address of Inventor:

Address 1	282 Grove Avenue
Address 2	
City	Cedar Grove
State/Province	NJ
Postal Code	07009
Country i	US

Inventor 2 Remove

Legal Name

Prefix	Given Name	Middle Name	Family Name	Suffix
	William	Londono	Correa	

Residence Information (Select One) ◉ US Residency Non US Residency Active US Military Service

City	Bloomfield	State/Province	NJ	Country of Residence i	US

Mailing Address of Inventor:

Address 1	282 Grove Avenue
Address 2	
City	Cedar Grove
State/Province	NJ
Postal Code	07009
Country i	US

All Inventors Must Be Listed - Additional Inventor Information blocks may be generated within this form by selecting the **Add** button. Add

Correspondence Information:

Enter either Customer Number or complete the Correspondence Information section below.
For further information see 37 CFR 1.33(a).

Under the Paperwork Reduction Act of 1995, no persons are required to respond to a collection of information unless it contains a valid OMB control number.

Application Data Sheet 37 CFR 1.76	Attorney Docket Number	061223-1141487
	Application Number	
Title of Invention	POOL CLEANING SYSTEM AND METHOD TO AUTOMATIALLY CLEAN SURFACES OF A POOL USING IMAGES FROM A CAMERA	

☐ **An Address is being provided for the correspondence Information of this application.**

Customer Number	23370		
Email Address	ipefiling@kilpatricktownsend.com	Add Email	Remove Email

Application Information:

Title of the Invention	POOL CLEANING SYSTEM AND METHOD TO AUTOMATIALLY CLEAN SURFACES OF A POOL USING IMAGES FROM A CAMERA		
Attorney Docket Number	061223-1141487	**Small Entity Status Claimed**	☐
Application Type	Nonprovisional		
Subject Matter	Utility		
Total Number of Drawing Sheets (if any)	4	**Suggested Figure for Publication (if any)**	

Filing By Reference:

Only complete this section when filing an application by reference under 35 U.S.C. 111(c) and 37 CFR 1.57(a). Do not complete this section if application papers including a specification and any drawings are being filed. Any domestic benefit or foreign priority information must be provided in the appropriate section(s) below (i.e., "Domestic Benefit/National Stage Information" and "Foreign Priority Information").

For the purposes of a filing date under 37 CFR 1.53(b), the description and any drawings of the present application are replaced by this reference to the previously filed application, subject to conditions and requirements of 37 CFR 1.57(a).

Application number of the previously filed application	Filing date (YYYY-MM-DD)	Intellectual Property Authority or Country

Publication Information:

☐ Request Early Publication (Fee required at time of Request 37 CFR 1.219)

☐ **Request Not to Publish.** I hereby request that the attached application not be published under 35 U.S.C. 122(b) and certify that the invention disclosed in the attached application **has not and will not** be the subject of an application filed in another country, or under a multilateral international agreement, that requires publication at eighteen months after filing.

Representative Information:

Representative information should be provided for all practitioners having a power of attorney in the application. Providing this information in the Application Data Sheet does not constitute a power of attorney in the application (see 37 CFR 1.32).
Either enter Customer Number or complete the Representative Name section below. If both sections are completed the customer Number will be used for the Representative Information during processing.

Please Select One:	● Customer Number	US Patent Practitioner	○ Limited Recognition (37 CFR 11.9)
Customer Number	23370		

Under the Paperwork Reduction Act of 1995, no persons are required to respond to a collection of information unless it contains a valid OMB control number.

Application Data Sheet 37 CFR 1.76	Attorney Docket Number	061223-1141487
	Application Number	
Title of Invention	POOL CLEANING SYSTEM AND METHOD TO AUTOMATIALLY CLEAN SURFACES OF A POOL USING IMAGES FROM A CAMERA	

Domestic Benefit/National Stage Information:

This section allows for the applicant to either claim benefit under 35 U.S.C. 119(e), 120, 121, 365(c), or 386(c) or indicate National Stage entry from a PCT application. Providing benefit claim information in the Application Data Sheet constitutes the specific reference required by 35 U.S.C. 119(e) or 120, and 37 CFR 1.78.
When referring to the current application, please leave the "Application Number" field blank.

Prior Application Status	Pending			Remove
Application Number	Continuity Type	Prior Application Number	Filing or 371(c) Date (YYYY-MM-DD)	
	Continuation of	15973983	2018-05-08	

Prior Application Status	Patented				Remove
Application Number	Continuity Type	Prior Application Number	Filing Date (YYYY-MM-DD)	Patent Number	Issue Date (YYYY-MM-DD)
15973983	Continuation of	15207065	2016-07-11	9995051	2018-06-12

Prior Application Status	Patented				Remove
Application Number	Continuity Type	Prior Application Number	Filing Date (YYYY-MM-DD)	Patent Number	Issue Date (YYYY-MM-DD)
15207065	Continuation of	13545918	2012-07-10	9388595	2016-07-12

Additional Domestic Benefit/National Stage Data may be generated within this form by selecting the **Add** button. Add

Foreign Priority Information:

This section allows for the applicant to claim priority to a foreign application. Providing this information in the application data sheet constitutes the claim for priority as required by 35 U.S.C. 119(b) and 37 CFR 1.55. When priority is claimed to a foreign application that is eligible for retrieval under the priority document exchange program (PDX)[i] the information will be used by the Office to automatically attempt retrieval pursuant to 37 CFR 1.55(i)(1) and (2). Under the PDX program, applicant bears the ultimate responsibility for ensuring that a copy of the foreign application is received by the Office from the participating foreign intellectual property office, or a certified copy of the foreign priority application is filed, within the time period specified in 37 CFR 1.55(g)(1).

Remove

Application Number	Country[i]	Filing Date (YYYY-MM-DD)	Access Code[i] (if applicable)

Additional Foreign Priority Data may be generated within this form by selecting the **Add** button. Add

Statement under 37 CFR 1.55 or 1.78 for AIA (First Inventor to File) Transition Applications

Under the Paperwork Reduction Act of 1995, no persons are required to respond to a collection of information unless it contains a valid OMB control number.

Application Data Sheet 37 CFR 1.76	Attorney Docket Number	061223-1141487
	Application Number	
Title of Invention	POOL CLEANING SYSTEM AND METHOD TO AUTOMATIALLY CLEAN SURFACES OF A POOL USING IMAGES FROM A CAMERA	

☐ This application (1) claims priority to or the benefit of an application filed before March 16, 2013 and (2) also contains, or contained at any time, a claim to a claimed invention that has an effective filing date on or after March 16, 2013.
NOTE: By providing this statement under 37 CFR 1.55 or 1.78, this application, with a filing date on or after March 16, 2013, will be examined under the first inventor to file provisions of the AIA.

Application Data Sheet 37 CFR 1.76	Attorney Docket Number	061223-1141487
	Application Number	
Title of Invention	POOL CLEANING SYSTEM AND METHOD TO AUTOMATIALLY CLEAN SURFACES OF A POOL USING IMAGES FROM A CAMERA	

Authorization or Opt-Out of Authorization to Permit Access:

When this Application Data Sheet is properly signed and filed with the application, applicant has provided written authority to permit a participating foreign intellectual property (IP) office access to the instant application-as-filed (see paragraph A in subsection 1 below) and the European Patent Office (EPO) access to any search results from the instant application (see paragraph B in subsection 1 below).

Should applicant choose not to provide an authorization identified in subsection 1 below, applicant **must opt-out** of the authorization by checking the corresponding box A or B or both in subsection 2 below.

NOTE: This section of the Application Data Sheet is **ONLY** reviewed and processed with the **INITIAL** filing of an application. After the initial filing of an application, an Application Data Sheet cannot be used to provide or rescind authorization for access by a foreign IP office(s). Instead, Form PTO/SB/39 or PTO/SB/69 must be used as appropriate.

1. Authorization to Permit Access by a Foreign Intellectual Property Office(s)

A. Priority Document Exchange (PDX) - Unless box A in subsection 2 (opt-out of authorization) is checked, the undersigned hereby **grants the USPTO authority** to provide the European Patent Office (EPO), the Japan Patent Office (JPO), the Korean Intellectual Property Office (KIPO), the State Intellectual Property Office of the People's Republic of China (SIPO), the World Intellectual Property Organization (WIPO), and any other foreign intellectual property office participating with the USPTO in a bilateral or multilateral priority document exchange agreement in which a foreign application claiming priority to the instant patent application is filed, access to: (1) the instant patent application-as-filed and its related bibliographic data, (2) any foreign or domestic application to which priority or benefit is claimed by the instant application and its related bibliographic data, and (3) the date of filing of this Authorization. See 37 CFR 1.14(h)(1).

B. Search Results from U.S. Application to EPO - Unless box B in subsection 2 (opt-out of authorization) is checked, the undersigned hereby **grants the USPTO authority** to provide the EPO access to the bibliographic data and search results from the instant patent application when a European patent application claiming priority to the instant patent application is filed. See 37 CFR 1.14(h)(2).

The applicant is reminded that the EPO's Rule 141(1) EPC (European Patent Convention) requires applicants to submit a copy of search results from the instant application without delay in a European patent application that claims priority to the instant application.

2. Opt-Out of Authorizations to Permit Access by a Foreign Intellectual Property Office(s)

☐ A. Applicant **DOES NOT** authorize the USPTO to permit a participating foreign IP office access to the instant application-as-filed. If this box is checked, the USPTO will not be providing a participating foreign IP office with any documents and information identified in subsection 1A above.

☐ B. Applicant **DOES NOT** authorize the USPTO to transmit to the EPO any search results from the instant patent application. If this box is checked, the USPTO will not be providing the EPO with search results from the instant application.

NOTE: Once the application has published or is otherwise publicly available, the USPTO may provide access to the application in accordance with 37 CFR 1.14.

Under the Paperwork Reduction Act of 1995, no persons are required to respond to a collection of information unless it contains a valid OMB control number.

Application Data Sheet 37 CFR 1.76	Attorney Docket Number	061223-1141487
	Application Number	
Title of Invention	POOL CLEANING SYSTEM AND METHOD TO AUTOMATIALLY CLEAN SURFACES OF A POOL USING IMAGES FROM A CAMERA	

Applicant Information:

Providing assignment information in this section does not substitute for compliance with any requirement of part 3 of Title 37 of CFR to have an assignment recorded by the Office.

Applicant 1 Remove

If the applicant is the inventor (or the remaining joint inventor or inventors under 37 CFR 1.45), this section should not be completed. The information to be provided in this section is the name and address of the legal representative who is the applicant under 37 CFR 1.43; or the name and address of the assignee, person to whom the inventor is under an obligation to assign the invention, or person who otherwise shows sufficient proprietary interest in the matter who is the applicant under 37 CFR 1.46. If the applicant is an applicant under 37 CFR 1.46 (assignee, person to whom the inventor is obligated to assign, or person who otherwise shows sufficient proprietary interest) together with one or more joint inventors, then the joint inventor or inventors who are also the applicant should be identified in this section.

Clear

● Assignee	Legal Representative under 35 U.S.C. 117	Joint Inventor
Person to whom the inventor is obligated to assign.	Person who shows sufficient proprietary interest	

If applicant is the legal representative, indicate the authority to file the patent application, the inventor is:

Name of the Deceased or Legally Incapacitated Inventor:

If the Applicant is an Organization check here. ☒

Organization Name	AQUA PRODUCTS, INC.		
Mailing Address Information For Applicant:			
Address 1	282 Grove Avenue		
Address 2			
City	Cedar Grove	**State/Province**	NJ
Country	US	Postal Code	07009
Phone Number		Fax Number	
Email Address			

Additional Applicant Data may be generated within this form by selecting the Add button. Add

Assignee Information including Non-Applicant Assignee Information:

Providing assignment information in this section does not substitute for compliance with any requirement of part 3 of Title 37 of CFR to have an assignment recorded by the Office.

Under the Paperwork Reduction Act of 1995, no persons are required to respond to a collection of information unless it contains a valid OMB control number.

Application Data Sheet 37 CFR 1.76	Attorney Docket Number	061223-1141487
	Application Number	
Title of Invention	POOL CLEANING SYSTEM AND METHOD TO AUTOMATIALLY CLEAN SURFACES OF A POOL USING IMAGES FROM A CAMERA	

Assignee 1

Complete this section if assignee information, including non-applicant assignee information, is desired to be included on the patent application publication. An assignee-applicant identified in the "Applicant Information" section will appear on the patent application publication as an applicant. For an assignee-applicant, complete this section only if identification as an assignee is also desired on the patent application publication.

Remove

If the Assignee or Non-Applicant Assignee is an Organization check here. ☒

Organization Name	AQUA PRODUCTS, INC.

Mailing Address Information For Assignee including Non-Applicant Assignee:

Address 1	282 Grove Avenue		
Address 2			
City	Cedar Grove	**State/Province**	NJ
Country i	US	Postal Code	07009
Phone Number		Fax Number	
Email Address			

Additional Assignee or Non-Applicant Assignee Data may be generated within this form by selecting the Add button. Add

Signature:

Remove

NOTE: This Application Data Sheet must be signed in accordance with 37 CFR 1.33(b). **However, if this Application Data Sheet is submitted with the INITIAL filing of the application and either box A or B is not checked in subsection 2 of the "Authorization or Opt-Out of Authorization to Permit Access" section, then this form must also be signed in accordance with 37 CFR 1.14(c).**

This Application Data Sheet must be signed by a patent practitioner if one or more of the applicants is a **juristic entity** (e.g., corporation or association). If the applicant is two or more joint inventors, this form must be signed by a patent practitioner, **all** joint inventors who are the applicant, or one or more joint inventor-applicants who have been given power of attorney (e.g., see USPTO Form PTO/AIA/81) on behalf of **all** joint inventor-applicants.

See 37 CFR 1.4(d) for the manner of making signatures and certifications.

Signature	/Dean W. Russell/			Date (YYYY-MM-DD)	2019-05-20
First Name	Dean	Last Name	Russell	Registration Number	33452

Additional Signature may be generated within this form by selecting the Add button. Add

Application Data Sheet 37 CFR 1.76	Attorney Docket Number	061223-1141487
	Application Number	
Title of Invention	POOL CLEANING SYSTEM AND METHOD TO AUTOMATIALLY CLEAN SURFACES OF A POOL USING IMAGES FROM A CAMERA	

This collection of information is required by 37 CFR 1.76. The information is required to obtain or retain a benefit by the public which is to file (and by the USPTO to process) an application. Confidentiality is governed by 35 U.S.C. 122 and 37 CFR 1.14. This collection is estimated to take 23 minutes to complete, including gathering, preparing, and submitting the completed application data sheet form to the USPTO. Time will vary depending upon the individual case. Any comments on the amount of time you require to complete this form and/or suggestions for reducing this burden, should be sent to the Chief Information Officer, U.S. Patent and Trademark Office, U.S. Department of Commerce, P.O. Box 1450, Alexandria, VA 22313-1450. DO NOT SEND FEES OR COMPLETED FORMS TO THIS ADDRESS. **SEND TO: Commissioner for Patents, P.O. Box 1450, Alexandria, VA 22313-1450.**

Privacy Act Statement

The Privacy Act of 1974 (P.L. 93-579) requires that you be given certain information in connection with your submission of the attached form related to a patent application or patent. Accordingly, pursuant to the requirements of the Act, please be advised that: (1) the general authority for the collection of this information is 35 U.S.C. 2(b)(2); (2) furnishing of the information solicited is voluntary; and (3) the principal purpose for which the information is used by the U.S. Patent and Trademark Office is to process and/or examine your submission related to a patent application or patent. If you do not furnish the requested information, the U.S. Patent and Trademark Office may not be able to process and/or examine your submission, which may result in termination of proceedings or abandonment of the application or expiration of the patent.

The information provided by you in this form will be subject to the following routine uses:

1 The information on this form will be treated confidentially to the extent allowed under the Freedom of Information Act (5 U.S.C. 552) and the Privacy Act (5 U.S.C. 552a). Records from this system of records may be disclosed to the Department of Justice to determine whether the Freedom of Information Act requires disclosure of these records.

2. A record from this system of records may be disclosed, as a routine use, in the course of presenting evidence to a court, magistrate, or administrative tribunal, including disclosures to opposing counsel in the course of settlement negotiations.

3 A record in this system of records may be disclosed, as a routine use, to a Member of Congress submitting a request involving an individual, to whom the record pertains, when the individual has requested assistance from the Member with respect to the subject matter of the record.

4. A record in this system of records may be disclosed, as a routine use, to a contractor of the Agency having need for the information in order to perform a contract. Recipients of information shall be required to comply with the requirements of the Privacy Act of 1974, as amended, pursuant to 5 U.S.C. 552a(m).

5. A record related to an International Application filed under the Patent Cooperation Treaty in this system of records may be disclosed, as a routine use, to the International Bureau of the World Intellectual Property Organization, pursuant to the Patent CooperationTreaty.

6. A record in this system of records may be disclosed, as a routine use, to another federal agency for purposes of National Security review (35 U.S.C. 181) and for review pursuant to the Atomic Energy Act (42 U.S.C. 218(c)).

7. A record from this system of records may be disclosed, as a routine use, to the Administrator, General Services, or his/her designee, during an inspection of records conducted by GSA as part of that agency's responsibility to recommend improvements in records management practices and programs, under authority of 44 U.S.C. 2904 and 2906. Such disclosure shall be made in accordance with the GSA regulations governing inspection of records for this purpose, and any other relevant (i.e., GSA or Commerce) directive. Such disclosure shall not be used to make determinations about individuals.

8. A record from this system of records may be disclosed, as a routine use, to the public after either publication of the application pursuant to 35 U.S.C. 122(b) or issuance of a patent pursuant to 35 U.S.C. 151. Further, a record may be disclosed, subject to the limitations of 37 CFR 1.14, as a routine use, to the public if the record was filed in an application which became abandoned or in which the proceedings were terminated and which application is referenced by either a published application, an application open to public inspections or an issued patent.

9. A record from this system of records may be disclosed, as a routine use, to a Federal, State, or local law enforcement agency, if the USPTO becomes aware of a violation or potential violation of law or regulation.

Doc Code: PA..
Document Description: Power of Attorney

PTO/AIA/82A (07-13)
Approved for use through 03/31/2021. OMB 0651-0035
U.S. Patent and Trademark Office; U.S. DEPARTMENT OF COMMERCE
Under the Paperwork Reduction Act of 1995, no persons are required to respond to a collection of information unless it displays a valid OMB control number.

TRANSMITTAL FOR POWER OF ATTORNEY TO ONE OR MORE REGISTERED PRACTITIONERS

NOTE: This form is to be submitted with the Power of Attorney by Applicant form (PTO/AIA/82B) to identify the application to which the Power of Attorney is directed, in accordance with 37 CFR 1.5, unless the application number and filing date are identified in the Power of Attorney by Applicant form. If neither form PTO/AIA/82A nor form PTO/AIA82B identifies the application to which the Power of Attorney is directed, the Power of Attorney will not be recognized in the application.

Application Number	TBD
Filing Date	Herewith
First Named Inventor	Kameshwar Durvasula
Title	POOL CLEANING SYSTEM AND METHOD TO AUTOMATICALLY CLEAN SURFACES OF A POOL USING IMAGES FROM A CAMERA
Art Unit	TBD
Examiner Name	TBD
Attorney Docket Number	061223-1141487

SIGNATURE of Applicant or Patent Practitioner

Signature	/Dean W. Russell/	Date (Optional)	
Name	Dean W. Russell	Registration Number	33452
Title (if Applicant is a juristic entity)	Attorney for Applicant		
Applicant Name (if Applicant is a juristic entity)	Aqua Products Inc.		

NOTE: This form must be signed in accordance with 37 CFR 1.33. See 37 CFR 1.4(d) for signature requirements and certifications. If more than one applicant, use multiple forms.

☑ *Total of 2 forms are submitted.

This collection of information is required by 37 CFR 1.131, 1.32, and 1.33. The information is required to obtain or retain a benefit by the public which is to file (and by the USPTO to process) an application. Confidentiality is governed by 35 U.S.C. 122 and 37 CFR 1.11 and 1.14. This collection is estimated to take 3 minutes to complete, including gathering, preparing, and submitting the completed application form to the USPTO. Time will vary depending upon the individual case. Any comments on the amount of time you require to complete this form and/or suggestions for reducing this burden, should be sent to the Chief Information Officer, U.S. Patent and Trademark Office, U.S. Department of Commerce, P.O. Box 1450, Alexandria, VA 22313-1450. DO NOT SEND FEES OR COMPLETED FORMS TO THIS ADDRESS. **SEND TO: Commissioner for Patents, P.O. Box 1450, Alexandria, VA 22313-1450.**

If you need assistance in completing the form, call 1-800-PTO-9199 and select option 2.

PTO/AIA/82B (07-13)
Approved for use through 03/31/2021. OMB 0651-0035
U.S. Patent and Trademark Office; U.S. DEPARTMENT OF COMMERCE
Under the Paperwork Reduction Act of 1995, no persons are required to respond to a collection of information unless it displays a valid OMB control number

POWER OF ATTORNEY BY APPLICANT

I hereby revoke all previous powers of attorney given in the application identified in either the attached transmittal letter or the boxes below.

Application Number	Filing Date

(Note: The boxes above may be left blank if information is provided on form PTO/AIA/82A.)

☑ I hereby appoint the Patent Practitioner(s) associated with the following Customer Number as my/our attorney(s) or agent(s), and to transact all business in the United States Patent and Trademark Office connected therewith for the application referenced in the attached transmittal letter (form PTO/AIA/82A) or identified above: 23370

OR

☐ I hereby appoint Practitioner(s) named in the attached list (form PTO/AIA/82C) as my/our attorney(s) or agent(s), and to transact all business in the United States Patent and Trademark Office connected therewith for the patent application referenced in the attached transmittal letter (form PTO/AIA/82A) or identified above. (Note: Complete form PTO/AIA/82C.)

Please recognize or change the correspondence address for the application identified in the attached transmittal letter or the boxes above to:

☑ The address associated with the above-mentioned Customer Number

OR

☐ The address associated with Customer Number:

OR

☐ Firm or Individual Name					
Address					
City		State		Zip	
Country					
Telephone		Email			

I am the Applicant (if the Applicant is a juristic entity, list the Applicant name in the box):

Aqua Products Inc.

☐ Inventor or Joint Inventor (title not required below)

☐ Legal Representative of a Deceased or Legally Incapacitated Inventor (title not required below)

☑ Assignee or Person to Whom the Inventor is Under an Obligation to Assign (provide signer's title if applicant is a juristic entity)

☐ Person Who Otherwise Shows Sufficient Proprietary Interest (e.g., a petition under 37 CFR 1.46(b)(2) was granted in the application or is concurrently being filed with this document) (provide signer's title if applicant is a juristic entity)

SIGNATURE of Applicant for Patent

The undersigned (whose title is supplied below) is authorized to act on behalf of the applicant (e.g., where the applicant is a juristic entity).

Signature		Date (Optional)	
Name	Carlos Franquesa		
Title	Vice President and Treasurer		

NOTE: Signature - This form must be signed by the applicant in accordance with 37 CFR 1.33. See 37 CFR 1.4 for signature requirements and certifications. If more than one applicant, use multiple forms.

☐ Total of forms are submitted.

This collection of information is required by 37 CFR 1.131, 1.32, and 1.33. The information is required to obtain or retain a benefit by the public which is to file (and by the USPTO to process) an application. Confidentiality is governed by 35 U.S.C. 122 and 37 CFR 1.11 and 1.14. This collection is estimated to take 3 minutes to complete, including gathering, preparing, and submitting the completed application form to the USPTO. Time will vary depending upon the individual case. Any comments on the amount of time you require to complete this form and/or suggestions for reducing this burden, should be sent to the Chief Information Officer, U.S. Patent and Trademark Office, U.S. Department of Commerce, P.O. Box 1450, Alexandria, VA 22313-1450. DO NOT SEND FEES OR COMPLETED FORMS TO THIS ADDRESS. **SEND TO: Commissioner for Patents, P.O. Box 1450, Alexandria, VA 22313-1450.**

If you need assistance in completing the form, call 1-800-PTO-9199 and select option 2.

I hereby certify that this correspondence is being filed via EFS-Web with the United States Patent and Trademark Office on 2019-05-20.

KILPATRICK TOWNSEND & STOCKTON LLP

By: Sandee Harvey /Sandee Harvey/

PATENT
Attorney Docket No.: 061223-1141487

IN THE UNITED STATES PATENT AND TRADEMARK OFFICE

In re Application of:

Kameshwar Durvasula et al.

Application No.: Not yet assigned

(Continuaton of 15/973,983)

Filed: Herewith

For: POOL CLEANING SYSTEM AND METHOD TO AUTOMATICALLY CLEAN SURFACES OF A POOL USING IMAGES FROM A CAMERA

Customer No.: 23370

Confirmation No.: Not yet assigned

Examiner: Not yet assigned

Technology Center/Art Unit: Not yet assigned

PRELIMINARY AMENDMENT

Mail Stop Amendment
Commissioner for Patents
P.O. Box 1450
Alexandria, VA 22313-1450

Commissioner:

Prior to examination of the above-referenced application, please enter the following amendments and consider the following remarks:

Amendments to the Specification begin on page 2 of this paper.

Amendments to the Claims are reflected in the listing of claims which begins on page 3 of this paper.

Remarks/Arguments begin on page 4 of this paper.

WYBOTICS EX1009
Wybotics v. Zodiac
Page 038

AMENDMENTS TO THE SPECIFICATION

Please delete the first paragraph of the application and replace with the following new paragraph:

This application is a continuation of commonly owned U.S. Patent Application Serial No. 15/973,983, filed May 8, 2018, which is a continuation of U.S. Patent Application Serial No. 15/207,065, filed July 11, 2016 (now U.S. Patent No. 9,995,051), which is a continuation of U.S. Patent Application Serial No. 13/545,918, filed July 10, 2012 (now U.S. Patent No. 9,388,595), the contents of all of which are incorporated herein by reference in their entireties.

WYBOTICS EX1009
Wybotics v. Zodiac
Page 039

AMENDMENTS TO THE CLAIMS

This listing of claims will replace all prior versions, and listings of claims in the application.

Listing of Claims:

1.-19. (Cancelled)

20. (New) A self-propelled pool cleaner for cleaning debris from a submerged surface of a swimming pool, comprising:

a. a vehicle body;

b. means for moving the vehicle body within the swimming pool;

c. a filter configured to retain debris collected from the submerged surface;

d. at least one camera positioned on or in the body for capturing an image of at least a first portion of the submerged surface; and

e. a controller (i) positioned on or in the body, (ii) in electronic communication with the at least one camera, and (iii) configured to generate at least one control signal to cause movement of the body within the swimming pool to the first portion of the submerged surface when the captured image fails to satisfy a pre-defined threshold.

WYBOTICS EX1009
Wybotics v. Zodiac
Page 040

REMARKS/ARGUMENTS

Upon entry of the present amendment, claim 20 will be pending in this application. Claims 1-19 have been canceled. Support for the new claim can be found throughout the specification. No new matter is added.

CONCLUSION

In view of the foregoing, Applicant believes the pending claim in this application is in condition for examination.

Except for the issue fees payable under 37 C.F.R. § 1.18, the Director is authorized to charge any additional fees during pendency of this application, including any required extension of time fees, or credit any overpayment to Deposit Account Number 20-1430. This paragraph is intended to be a constructive petition for extension of time in accordance with 37 C.F.R. § 1.136(a)(3).

If the Examiner believes a telephone conference would expedite prosecution of this application, please contact the undersigned at 404-815-6528 or drussell@kilpatricktownsend.com.

Respectfully submitted,

/Dean W. Russell/

Dean W. Russell
Registration No. 33,452

KILPATRICK TOWNSEND & STOCKTON LLP

15536940V.1

WYBOTICS EX1009
Wybotics v. Zodiac
Page 041

Electronic Patent Application Fee Transmittal

Application Number:	
Filing Date:	
Title of Invention:	POOL CLEANING SYSTEM AND METHOD TO AUTOMATIALLY CLEAN SURFACES OF A POOL USING IMAGES FROM A CAMERA
First Named Inventor/Applicant Name:	Kameshwar Durvasula
Filer:	Dean W. Russell/Sandee Harvey-McCullough
Attorney Docket Number:	061223-1141487

Filed as Large Entity

Filing Fees for Utility under 35 USC 111(a)

Description	Fee Code	Quantity	Amount	Sub-Total in USD($)
Basic Filing:				
UTILITY APPLICATION FILING	1011	1	300	300
UTILITY SEARCH FEE	1111	1	660	660
UTILITY EXAMINATION FEE	1311	1	760	760
Pages:				
Claims:				
Miscellaneous-Filing:				
Petition:				
Patent-Appeals-and-Interference:				

Description	Fee Code	Quantity	Amount	Sub-Total in USD($)
Post-Allowance-and-Post-Issuance:				
Extension-of-Time:				
Miscellaneous:				
			Total in USD ($)	**1720**

Electronic Acknowledgement Receipt

EFS ID:	36059754
Application Number:	16416840
International Application Number:	
Confirmation Number:	5789
Title of Invention:	POOL CLEANING SYSTEM AND METHOD TO AUTOMATIALLY CLEAN SURFACES OF A POOL USING IMAGES FROM A CAMERA
First Named Inventor/Applicant Name:	Kameshwar Durvasula
Customer Number:	23370
Filer:	Dean W. Russell/Sandee Harvey-McCullough
Filer Authorized By:	Dean W. Russell
Attorney Docket Number:	061223-1141487
Receipt Date:	20-MAY-2019
Filing Date:	
Time Stamp:	15:31:43
Application Type:	Utility under 35 USC 111(a)

Payment information:

Submitted with Payment	yes
Payment Type	CARD
Payment was successfully received in RAM	$1720
RAM confirmation Number	052119INTEFSW15334300
Deposit Account	201430
Authorized User	Sandee Harvey-McCullough

The Director of the USPTO is hereby authorized to charge indicated fees and credit any overpayment as follows:

37 CFR 1.16 (National application filing, search, and examination fees)

37 CFR 1.17 (Patent application and reexamination processing fees)

37 CFR 1.19 (Document supply fees)

37 CFR 1.20 (Post Issuance fees)

37 CFR 1.21 (Miscellaneous fees and charges)

File Listing:

Document Number	Document Description	File Name	File Size(Bytes)/ Message Digest	Multi Part /.zip	Pages (if appl.)
1	Transmittal of New Application	APPLNTRANS.pdf	280551 57800ff2f49b338790a4649e2aa13a97857378e3	no	2
Warnings:					
Information:					
2		APPLN.pdf	1216442 2eb1410de6cd955893a642ae34fa243ae6ded88a	yes	18
	Multipart Description/PDF files in .zip description				
	Document Description		**Start**	**End**	
	Specification		1	14	
	Claims		15	17	
	Abstract		18	18	
Warnings:					
Information:					
3	Drawings-only black and white line drawings	DWGS.pdf	774703 e547858b5ae0cb1ed032297b320672b82416946d	no	4
Warnings:					
Information:					
4	Oath or Declaration filed	DEC.pdf	2990065 39f89fa4f2ca1a0bbd85e5a0f012293a6e157316	no	2
Warnings:					
Information:					
5	Application Data Sheet	ADS.pdf	1822421 3b83fe3ceb188cacacb31159a7e976b56fc847dc	no	9

Warnings:					
Information:					
6	Power of Attorney	POATRANS.pdf	167327 cc1313fd8e6b9ce76cde7e93224123d727f82488	no	1
Warnings:					
Information:					
7	Power of Attorney	POA.pdf	410230 22510635e05fd5bf816952b0b40255d6c5e87b28	no	1
Warnings:					
The page size in the PDF is too large. The pages should be 8.5 x 11 or A4. If this PDF is submitted, the pages will be resized upon entry into the Image File Wrapper and may affect subsequent processing					
Information:					
8		PRELIMAMD.pdf	89015 3610a4d6c93a3fb4c99c577d0dd36ed98dbf119f	yes	4

Multipart Description/PDF files in .zip description

Document Description	Start	End
Preliminary Amendment	1	1
Specification	2	2
Claims	3	3
Applicant Arguments/Remarks Made in an Amendment	4	4

Warnings:					
Information:					
9	Fee Worksheet (SB06)	fee-info.pdf	35175 28be015587ebc55ae7b8386645e739422e5a939c	no	2
Warnings:					
Information:					
			Total Files Size (in bytes):	7785929	

This Acknowledgement Receipt evidences receipt on the noted date by the USPTO of the indicated documents, characterized by the applicant, and including page counts, where applicable. It serves as evidence of receipt similar to a Post Card, as described in MPEP 503.

New Applications Under 35 U.S.C. 111
If a new application is being filed and the application includes the necessary components for a filing date (see 37 CFR 1.53(b)-(d) and MPEP 506), a Filing Receipt (37 CFR 1.54) will be issued in due course and the date shown on this Acknowledgement Receipt will establish the filing date of the application.
National Stage of an International Application under 35 U.S.C. 371
If a timely submission to enter the national stage of an international application is compliant with the conditions of 35 U.S.C. 371 and other applicable requirements a Form PCT/DO/EO/903 indicating acceptance of the application as a national stage submission under 35 U.S.C. 371 will be issued in addition to the Filing Receipt, in due course.
New International Application Filed with the USPTO as a Receiving Office
If a new international application is being filed and the international application includes the necessary components for an international filing date (see PCT Article 11 and MPEP 1810), a Notification of the International Application Number and of the International Filing Date (Form PCT/RO/105) will be issued in due course, subject to prescriptions concerning national security, and the date shown on this Acknowledgement Receipt will establish the international filing date of the application.

PATENT APPLICATION FEE DETERMINATION RECORD

Substitute for Form PTO-875

Application or Docket Number
16/416,840

APPLICATION AS FILED - PART I

FOR	(Column 1) NUMBER FILED	(Column 2) NUMBER EXTRA	SMALL ENTITY RATE($)	SMALL ENTITY FEE($)	OR	OTHER THAN SMALL ENTITY RATE($)	OTHER THAN SMALL ENTITY FEE($)
BASIC FEE (37 CFR 1.16(a), (b), or (c))	N/A	N/A	N/A			N/A	300
SEARCH FEE (37 CFR 1.16(k), (i), or (m))	N/A	N/A	N/A			N/A	660
EXAMINATION FEE (37 CFR 1.16(o), (p), or (q))	N/A	N/A	N/A			N/A	760
TOTAL CLAIMS (37 CFR 1.16(i))	1 minus 20 =	*			OR	x 100 =	0.00
INDEPENDENT CLAIMS (37 CFR 1.16(h))	1 minus 3 =	*				x 460 =	0.00
APPLICATION SIZE FEE (37 CFR 1.16(s))	If the specification and drawings exceed 100 sheets of paper, the application size fee due is $310 ($155 for small entity) for each additional 50 sheets or fraction thereof. See 35 U.S.C. 41(a)(1)(G) and 37 CFR 1.16(s).						0.00
MULTIPLE DEPENDENT CLAIM PRESENT (37 CFR 1.16(j))							0.00
* If the difference in column 1 is less than zero, enter "0" in column 2.			TOTAL			TOTAL	1720

APPLICATION AS AMENDED - PART II

		(Column 1) CLAIMS REMAINING AFTER AMENDMENT		(Column 2) HIGHEST NUMBER PREVIOUSLY PAID FOR	(Column 3) PRESENT EXTRA	SMALL ENTITY RATE($)	SMALL ENTITY ADDITIONAL FEE($)	OR	OTHER THAN SMALL ENTITY RATE($)	OTHER THAN SMALL ENTITY ADDITIONAL FEE($)
AMENDMENT A	Total (37 CFR 1.16(i))	*	Minus	**	=	x =		OR	x =	
AMENDMENT A	Independent (37 CFR 1.16(h))	*	Minus	***	=	x =		OR	x =	
AMENDMENT A	Application Size Fee (37 CFR 1.16(s))									
AMENDMENT A	FIRST PRESENTATION OF MULTIPLE DEPENDENT CLAIM (37 CFR 1.16(j))							OR		
						TOTAL ADD'L FEE		OR	TOTAL ADD'L FEE	

		(Column 1) CLAIMS REMAINING AFTER AMENDMENT		(Column 2) HIGHEST NUMBER PREVIOUSLY PAID FOR	(Column 3) PRESENT EXTRA	RATE($)	ADDITIONAL FEE($)	OR	RATE($)	ADDITIONAL FEE($)
AMENDMENT B	Total (37 CFR 1.16(i))	*	Minus	**	=	x =		OR	x =	
AMENDMENT B	Independent (37 CFR 1.16(h))	*	Minus	***	=	x =		OR	x =	
AMENDMENT B	Application Size Fee (37 CFR 1.16(s))									
AMENDMENT B	FIRST PRESENTATION OF MULTIPLE DEPENDENT CLAIM (37 CFR 1.16(j))							OR		
						TOTAL ADD'L FEE		OR	TOTAL ADD'L FEE	

* If the entry in column 1 is less than the entry in column 2, write "0" in column 3.
** If the "Highest Number Previously Paid For" IN THIS SPACE is less than 20, enter "20".
*** If the "Highest Number Previously Paid For" IN THIS SPACE is less than 3, enter "3".
The "Highest Number Previously Paid For" (Total or Independent) is the highest found in the appropriate box in column 1.

UNITED STATES PATENT AND TRADEMARK OFFICE

UNITED STATES DEPARTMENT OF COMMERCE
United States Patent and Trademark Office
Address: COMMISSIONER FOR PATENTS
P.O. Box 1450
Alexandria, Virginia 22313-1450
www.uspto.gov

APPLICATION NUMBER	FILING or 371(c) DATE	GRP ART UNIT	FIL FEE REC'D	ATTY.DOCKET.NO	TOT CLAIMS	IND CLAIMS
16/416,840	05/20/2019	3723	1720	061223-1141487	1	1

CONFIRMATION NO. 5789

FILING RECEIPT

OC000000108306152

23370
KILPATRICK TOWNSEND & STOCKTON LLP
Mailstop: IP Docketing - 22
1100 PEACHTREE STREET
SUITE 2800
ATLANTA, GA 30309

Date Mailed: 05/30/2019

Receipt is acknowledged of this non-provisional utility patent application. The application will be taken up for examination in due course. Applicant will be notified as to the results of the examination. Any correspondence concerning the application must include the following identification information: the U.S. APPLICATION NUMBER, FILING DATE, NAME OF FIRST INVENTOR, and TITLE OF INVENTION. Fees transmitted by check or draft are subject to collection.

Please verify the accuracy of the data presented on this receipt. If an error is noted on this Filing Receipt, please submit a written request for a corrected Filing Receipt, including a properly marked-up ADS showing the changes with strike-through for deletions and underlining for additions. If you received a "Notice to File Missing Parts" or other Notice requiring a response for this application, please submit any request for correction to this Filing Receipt with your reply to the Notice. When the USPTO processes the reply to the Notice, the USPTO will generate another Filing Receipt incorporating the requested corrections provided that the request is grantable.

Inventor(s)

Kameshwar Durvasula, Garfield, NJ;
William Londono Correa, Bloomfield, NJ;

Applicant(s)

AQUA PRODUCTS, INC., Cedar Grove, NJ;

Assignment For Published Patent Application

AQUA PRODUCTS, INC., Cedar Grove, NJ

Power of Attorney: The patent practitioners associated with Customer Number 23370

Domestic Priority data as claimed by applicant

This application is a CON of 15/973,983 05/08/2018
which is a CON of 15/207,065 07/11/2016 PAT 9995051
which is a CON of 13/545,918 07/10/2012 PAT 9388595

Foreign Applications for which priority is claimed (You may be eligible to benefit from the **Patent Prosecution Highway** program at the USPTO. Please see http://www.uspto.gov for more information.) - None.
Foreign application information must be provided in an Application Data Sheet in order to constitute a claim to foreign priority. See 37 CFR 1.55 and 1.76.

Permission to Access Application via Priority Document Exchange: Yes

Permission to Access Search Results: Yes

Applicant may provide or rescind an authorization for access using Form PTO/SB/39 or Form PTO/SB/69 as appropriate.

If Required, Foreign Filing License Granted: 05/28/2019

The country code and number of your priority application, to be used for filing abroad under the Paris Convention, is **US 16/416,840**

Projected Publication Date: 09/05/2019

Non-Publication Request: No

Early Publication Request: No

Title

POOL CLEANING SYSTEM AND METHOD TO AUTOMATIALLY CLEAN SURFACES OF A POOL USING IMAGES FROM A CAMERA

Preliminary Class

015

Statement under 37 CFR 1.55 or 1.78 for AIA (First Inventor to File) Transition Applications: No

PROTECTING YOUR INVENTION OUTSIDE THE UNITED STATES

Since the rights granted by a U.S. patent extend only throughout the territory of the United States and have no effect in a foreign country, an inventor who wishes patent protection in another country must apply for a patent in a specific country or in regional patent offices. Applicants may wish to consider the filing of an international application under the Patent Cooperation Treaty (PCT). An international (PCT) application generally has the same effect as a regular national patent application in each PCT-member country. The PCT process **simplifies** the filing of patent applications on the same invention in member countries, but **does not result** in a grant of "an international patent" and does not eliminate the need of applicants to file additional documents and fees in countries where patent protection is desired.

Almost every country has its own patent law, and a person desiring a patent in a particular country must make an application for patent in that country in accordance with its particular laws. Since the laws of many countries differ in various respects from the patent law of the United States, applicants are advised to seek guidance from specific foreign countries to ensure that patent rights are not lost prematurely.

Applicants also are advised that in the case of inventions made in the United States, the Director of the USPTO must issue a license before applicants can apply for a patent in a foreign country. The filing of a U.S. patent application serves as a request for a foreign filing license. The application's filing receipt contains further information and guidance as to the status of applicant's license for foreign filing.

Applicants may wish to consult the USPTO booklet, "General Information Concerning Patents" (specifically, the section entitled "Treaties and Foreign Patents") for more information on timeframes and deadlines for filing foreign patent applications. The guide is available either by contacting the USPTO Contact Center at 800-786-9199, or it can be viewed on the USPTO website at http://www.uspto.gov/web/offices/pac/doc/general/index.html.

For information on preventing theft of your intellectual property (patents, trademarks and copyrights), you may wish to consult the U.S. Government website, http://www.stopfakes.gov. Part of a Department of Commerce initiative, this website includes self-help "toolkits" giving innovators guidance on how to protect intellectual property in specific

countries such as China, Korea and Mexico. For questions regarding patent enforcement issues, applicants may call the U.S. Government hotline at 1-866-999-HALT (1-866-999-4258).

LICENSE FOR FOREIGN FILING UNDER

Title 35, United States Code, Section 184

Title 37, Code of Federal Regulations, 5.11 & 5.15

GRANTED

The applicant has been granted a license under 35 U.S.C. 184, if the phrase "IF REQUIRED, FOREIGN FILING LICENSE GRANTED" followed by a date appears on this form. Such licenses are issued in all applications where the conditions for issuance of a license have been met, regardless of whether or not a license may be required as set forth in 37 CFR 5.15. The scope and limitations of this license are set forth in 37 CFR 5.15(a) unless an earlier license has been issued under 37 CFR 5.15(b). The license is subject to revocation upon written notification. The date indicated is the effective date of the license, unless an earlier license of similar scope has been granted under 37 CFR 5.13 or 5.14.

This license is to be retained by the licensee and may be used at any time on or after the effective date thereof unless it is revoked. This license is automatically transferred to any related applications(s) filed under 37 CFR 1.53(d). This license is not retroactive.

The grant of a license does not in any way lessen the responsibility of a licensee for the security of the subject matter as imposed by any Government contract or the provisions of existing laws relating to espionage and the national security or the export of technical data. Licensees should apprise themselves of current regulations especially with respect to certain countries, of other agencies, particularly the Office of Defense Trade Controls, Department of State (with respect to Arms, Munitions and Implements of War (22 CFR 121-128)); the Bureau of Industry and Security, Department of Commerce (15 CFR parts 730-774); the Office of Foreign AssetsControl, Department of Treasury (31 CFR Parts 500+) and the Department of Energy.

NOT GRANTED

No license under 35 U.S.C. 184 has been granted at this time, if the phrase "IF REQUIRED, FOREIGN FILING LICENSE GRANTED" DOES NOT appear on this form. Applicant may still petition for a license under 37 CFR 5.12, if a license is desired before the expiration of 6 months from the filing date of the application. If 6 months has lapsed from the filing date of this application and the licensee has not received any indication of a secrecy order under 35 U.S.C. 181, the licensee may foreign file the application pursuant to 37 CFR 5.15(b).

SelectUSA

The United States represents the largest, most dynamic marketplace in the world and is an unparalleled location for business investment, innovation, and commercialization of new technologies. The U.S. offers tremendous resources and advantages for those who invest and manufacture goods here. Through SelectUSA, our nation works to promote and facilitate business investment. SelectUSA provides information assistance to the international investor community; serves as an ombudsman for existing and potential investors; advocates on behalf of U.S. cities, states, and regions competing for global investment; and counsels U.S. economic development organizations on investment attraction best practices. To learn more about why the United States is the best country in the world to develop

technology, manufacture products, deliver services, and grow your business, visit http://www.SelectUSA.gov or call +1-202-482-6800.

I hereby certify that this correspondence is being filed via EFS-Web with the United States Patent and Trademark Office on 2019-08-08.

KILPATRICK TOWNSEND & STOCKTON LLP

By: Sandee Harvey /Sandee Harvey/

PATENT
Attorney Docket No.: 105650-1141487

IN THE UNITED STATES PATENT AND TRADEMARK OFFICE

In re Application of:

Kameshwar Durvasula

Application No.: 16/416,840

Filed: May 20, 2019

For: POOL CLEANING SYSTEM AND METHOD TO AUTOMATICALLY CLEAN SURFACES OF A POOL USING IMAGES FROM A CAMERA

Customer No.: 23370

Confirmation No.: 5789

Examiner:

Technology Center/Art Unit: 3723

SUBMISSION OF SUPPLEMENTAL APPLICATION DATA SHEET AND REQUEST FOR CORRECTED FILING RECEIPT

Commissioner for Patents
P.O. Box 1450
Alexandria, VA 22313-1450

Commissioner:

Upon review of the Filing Receipt dated May 30, 2019, Applicant identified a typographical error. Applicant requests correction of the typographical error as follows:

- Under Title, please change the seventh word "AUTOMATIALLY" to "AUTOMATICALLY."

In support of this request Applicant submits a supplemental Application Data Sheet annotating the requested change. Applicant respectfully requests that a Corrected Filing Receipt be issued to correct the typographical error in the title.

No fee is believed due for correction of the filing receipt. However, the Commissioner is authorized to charge any fee due to Deposit Account No. 20-1430.

WYBOTICS EX1009
Wybotics v. Zodiac
Page 053

Respectfully submitted,

/Dean W. Russell/
Dean W. Russell
Registration No. 33452

KILPATRICK TOWNSEND & STOCKTON LLP

Attachment as noted

15838670V.1

Under the Paperwork Reduction Act of 1995, no persons are required to respond to a collection of information unless it contains a valid OMB control number.

Application Data Sheet 37 CFR 1.76	Attorney Docket Number	061223-1141487
	Application Number	16/416,840
Title of Invention	POOL CLEANING SYSTEM AND METHOD TO ~~AUTOMATIALLY~~ AUTOMATICALLY CLEAN SURFACES OF A POOL USING IMAGES FROM A CAMERA	

The application data sheet is part of the provisional or nonprovisional application for which it is being submitted. The following form contains the bibliographic data arranged in a format specified by the United States Patent and Trademark Office as outlined in 37 CFR 1.76.
This document may be completed electronically and submitted to the Office in electronic format using the Electronic Filing System (EFS) or the document may be printed and included in a paper filed application.

Secrecy Order 37 CFR 5.2:

☐ Portions or all of the application associated with this Application Data Sheet may fall under a Secrecy Order pursuant to 37 CFR 5.2 (Paper filers only. Applications that fall under Secrecy Order may not be filed electronically.)

Inventor Information:

Inventor 1 Remove

Legal Name

Prefix	Given Name	Middle Name	Family Name	Suffix
	Kameshwar		Durvasula	

Residence Information (Select One) ◉ US Residency ◯ Non US Residency ◯ Active US Military Service

City	Garfield	State/Province	NJ	Country of Residence	US

Mailing Address of Inventor:

Address 1	282 Grove Avenue		
Address 2			
City	Cedar Grove	State/Province	NJ
Postal Code	07009	Country	US

Inventor 2 Remove

Legal Name

Prefix	Given Name	Middle Name	Family Name	Suffix
	William	Londono	Correa	

Residence Information (Select One) ◉ US Residency ◯ Non US Residency ◯ Active US Military Service

City	Bloomfield	State/Province	NJ	Country of Residence	US

Mailing Address of Inventor:

Address 1	282 Grove Avenue		
Address 2			
City	Cedar Grove	State/Province	NJ
Postal Code	07009	Country	US

All Inventors Must Be Listed - Additional Inventor Information blocks may be generated within this form by selecting the **Add** button. Add

Correspondence Information:

Enter either Customer Number or complete the Correspondence Information section below.
For further information see 37 CFR 1.33(a).

Under the Paperwork Reduction Act of 1995, no persons are required to respond to a collection of information unless it contains a valid OMB control number.

Application Data Sheet 37 CFR 1.76	Attorney Docket Number	061223-1141487
	Application Number	16/416,840
Title of Invention	POOL CLEANING SYSTEM AND METHOD TO ~~AUTOMATIALLY~~ AUTOMATICALLY CLEAN SURFACES OF A POOL USING IMAGES FROM A CAMERA	

☐ **An Address is being provided for the correspondence Information of this application.**

Customer Number	23370		
Email Address	ipefiling@kilpatricktownsend.com	Add Email	Remove Email

Application Information:

Title of the Invention	POOL CLEANING SYSTEM AND METHOD TO ~~AUTOMATIALLY~~ AUTOMATICALLY CLEAN SURFACES OF A POOL USING IMAGES FROM A CAMERA		
Attorney Docket Number	061223-1141487	**Small Entity Status Claimed**	☐
Application Type	Nonprovisional		
Subject Matter	Utility		
Total Number of Drawing Sheets (if any)	4	**Suggested Figure for Publication (if any)**	

Filing By Reference:

Only complete this section when filing an application by reference under 35 U.S.C. 111(c) and 37 CFR 1.57(a). Do not complete this section if application papers including a specification and any drawings are being filed. Any domestic benefit or foreign priority information must be provided in the appropriate section(s) below (i.e., "Domestic Benefit/National Stage Information" and "Foreign Priority Information").

For the purposes of a filing date under 37 CFR 1.53(b), the description and any drawings of the present application are replaced by this reference to the previously filed application, subject to conditions and requirements of 37 CFR 1.57(a).

Application number of the previously filed application	Filing date (YYYY-MM-DD)	Intellectual Property Authority or Country

Publication Information:

☐ Request Early Publication (Fee required at time of Request 37 CFR 1.219)

☐ **Request Not to Publish.** I hereby request that the attached application not be published under 35 U.S.C. 122(b) and certify that the invention disclosed in the attached application **has not and will not** be the subject of an application filed in another country, or under a multilateral international agreement, that requires publication at eighteen months after filing.

Representative Information:

Representative information should be provided for all practitioners having a power of attorney in the application. Providing this information in the Application Data Sheet does not constitute a power of attorney in the application (see 37 CFR 1.32).
Either enter Customer Number or complete the Representative Name section below. If both sections are completed the customer Number will be used for the Representative Information during processing.

Please Select One:	◉ Customer Number	○ US Patent Practitioner	○ Limited Recognition (37 CFR 11.9)
Customer Number	23370		

Under the Paperwork Reduction Act of 1995, no persons are required to respond to a collection of information unless it contains a valid OMB control number.

Application Data Sheet 37 CFR 1.76	Attorney Docket Number	061223-1141487
	Application Number	16/416,840
Title of Invention	POOL CLEANING SYSTEM AND METHOD TO ~~AUTOMATIALLY~~ AUTOMATICALLY CLEAN SURFACES OF A POOL USING IMAGES FROM A CAMERA	

Domestic Benefit/National Stage Information:

This section allows for the applicant to either claim benefit under 35 U.S.C. 119(e), 120, 121, 365(c), or 386(c) or indicate National Stage entry from a PCT application. Providing benefit claim information in the Application Data Sheet constitutes the specific reference required by 35 U.S.C. 119(e) or 120, and 37 CFR 1.78.
When referring to the current application, please leave the "Application Number" field blank.

Prior Application Status	Pending		Remove
Application Number	Continuity Type	Prior Application Number	Filing or 371(c) Date (YYYY-MM-DD)
	Continuation of	15973983	2018-05-08

Prior Application Status	Patented				Remove
Application Number	Continuity Type	Prior Application Number	Filing Date (YYYY-MM-DD)	Patent Number	Issue Date (YYYY-MM-DD)
15973983	Continuation of	15207065	2016-07-11	9995051	2018-06-12

Prior Application Status	Patented				Remove
Application Number	Continuity Type	Prior Application Number	Filing Date (YYYY-MM-DD)	Patent Number	Issue Date (YYYY-MM-DD)
15207065	Continuation of	13545918	2012-07-10	9388595	2016-07-12

Additional Domestic Benefit/National Stage Data may be generated within this form by selecting the **Add** button.

Foreign Priority Information:

This section allows for the applicant to claim priority to a foreign application. Providing this information in the application data sheet constitutes the claim for priority as required by 35 U.S.C. 119(b) and 37 CFR 1.55. When priority is claimed to a foreign application that is eligible for retrieval under the priority document exchange program (PDX)[i] the information will be used by the Office to automatically attempt retrieval pursuant to 37 CFR 1.55(i)(1) and (2). Under the PDX program, applicant bears the ultimate responsibility for ensuring that a copy of the foreign application is received by the Office from the participating foreign intellectual property office, or a certified copy of the foreign priority application is filed, within the time period specified in 37 CFR 1.55(g)(1).

Remove

Application Number	Country[i]	Filing Date (YYYY-MM-DD)	Access Code[i] (if applicable)

Additional Foreign Priority Data may be generated within this form by selecting the **Add** button.

Statement under 37 CFR 1.55 or 1.78 for AIA (First Inventor to File) Transition Applications

Under the Paperwork Reduction Act of 1995, no persons are required to respond to a collection of information unless it contains a valid OMB control number.

Application Data Sheet 37 CFR 1.76	Attorney Docket Number	061223-1141487
	Application Number	16/416,840
Title of Invention	POOL CLEANING SYSTEM AND METHOD TO ~~AUTOMATIALLY~~ AUTOMATICALLY CLEAN SURFACES OF A POOL USING IMAGES FROM A CAMERA	

☐ This application (1) claims priority to or the benefit of an application filed before March 16, 2013 and (2) also contains, or contained at any time, a claim to a claimed invention that has an effective filing date on or after March 16, 2013.
NOTE: By providing this statement under 37 CFR 1.55 or 1.78, this application, with a filing date on or after March 16, 2013, will be examined under the first inventor to file provisions of the AIA.

Under the Paperwork Reduction Act of 1995, no persons are required to respond to a collection of information unless it contains a valid OMB control number.

Application Data Sheet 37 CFR 1.76	Attorney Docket Number	061223-1141487
	Application Number	16/416,840
Title of Invention	POOL CLEANING SYSTEM AND METHOD TO ~~AUTOMATIALLY~~ AUTOMATICALLY CLEAN SURFACES OF A POOL USING IMAGES FROM A CAMERA	

Authorization or Opt-Out of Authorization to Permit Access:

When this Application Data Sheet is properly signed and filed with the application, applicant has provided written authority to permit a participating foreign intellectual property (IP) office access to the instant application-as-filed (see paragraph A in subsection 1 below) and the European Patent Office (EPO) access to any search results from the instant application (see paragraph B in subsection 1 below).

Should applicant choose not to provide an authorization identified in subsection 1 below, applicant **must opt-out** of the authorization by checking the corresponding box A or B or both in subsection 2 below.

NOTE: This section of the Application Data Sheet is **ONLY** reviewed and processed with the **INITIAL** filing of an application. After the initial filing of an application, an Application Data Sheet cannot be used to provide or rescind authorization for access by a foreign IP office(s). Instead, Form PTO/SB/39 or PTO/SB/69 must be used as appropriate.

1. Authorization to Permit Access by a Foreign Intellectual Property Office(s)

A. Priority Document Exchange (PDX) - Unless box A in subsection 2 (opt-out of authorization) is checked, the undersigned hereby **grants the USPTO authority** to provide the European Patent Office (EPO), the Japan Patent Office (JPO), the Korean Intellectual Property Office (KIPO), the State Intellectual Property Office of the People's Republic of China (SIPO), the World Intellectual Property Organization (WIPO), and any other foreign intellectual property office participating with the USPTO in a bilateral or multilateral priority document exchange agreement in which a foreign application claiming priority to the instant patent application is filed, access to: (1) the instant patent application-as-filed and its related bibliographic data, (2) any foreign or domestic application to which priority or benefit is claimed by the instant application and its related bibliographic data, and (3) the date of filing of this Authorization. See 37 CFR 1.14(h)(1).

B. Search Results from U.S. Application to EPO - Unless box B in subsection 2 (opt-out of authorization) is checked, the undersigned hereby **grants the USPTO authority** to provide the EPO access to the bibliographic data and search results from the instant patent application when a European patent application claiming priority to the instant patent application is filed. See 37 CFR 1.14(h)(2).

The applicant is reminded that the EPO's Rule 141(1) EPC (European Patent Convention) requires applicants to submit a copy of search results from the instant application without delay in a European patent application that claims priority to the instant application.

2. Opt-Out of Authorizations to Permit Access by a Foreign Intellectual Property Office(s)

☐ A. Applicant **DOES NOT** authorize the USPTO to permit a participating foreign IP office access to the instant application-as-filed. If this box is checked, the USPTO will not be providing a participating foreign IP office with any documents and information identified in subsection 1A above.

☐ B. Applicant **DOES NOT** authorize the USPTO to transmit to the EPO any search results from the instant patent application. If this box is checked, the USPTO will not be providing the EPO with search results from the instant application.

NOTE: Once the application has published or is otherwise publicly available, the USPTO may provide access to the application in accordance with 37 CFR 1.14.

Under the Paperwork Reduction Act of 1995, no persons are required to respond to a collection of information unless it contains a valid OMB control number.

Application Data Sheet 37 CFR 1.76	Attorney Docket Number	061223-1141487
	Application Number	16/416,840
Title of Invention	POOL CLEANING SYSTEM AND METHOD TO ~~AUTOMATIALLY~~ AUTOMATICALLY CLEAN SURFACES OF A POOL USING IMAGES FROM A CAMERA	

Applicant Information:

Providing assignment information in this section does not substitute for compliance with any requirement of part 3 of Title 37 of CFR to have an assignment recorded by the Office.

Applicant 1

If the applicant is the inventor (or the remaining joint inventor or inventors under 37 CFR 1.45), this section should not be completed. The information to be provided in this section is the name and address of the legal representative who is the applicant under 37 CFR 1.43; or the name and address of the assignee, person to whom the inventor is under an obligation to assign the invention, or person who otherwise shows sufficient proprietary interest in the matter who is the applicant under 37 CFR 1.46. If the applicant is an applicant under 37 CFR 1.46 (assignee, person to whom the inventor is obligated to assign, or person who otherwise shows sufficient proprietary interest) together with one or more joint inventors, then the joint inventor or inventors who are also the applicant should be identified in this section.

Clear

- (●) Assignee
- ( ) Legal Representative under 35 U.S.C. 117
- ( ) Joint Inventor
- ( ) Person to whom the inventor is obligated to assign.
- ( ) Person who shows sufficient proprietary interest

If applicant is the legal representative, indicate the authority to file the patent application, the inventor is:

Name of the Deceased or Legally Incapacitated Inventor:

If the Applicant is an Organization check here. ☒

Organization Name	AQUA PRODUCTS, INC.		
Mailing Address Information For Applicant:			
Address 1	282 Grove Avenue		
Address 2			
City	Cedar Grove	**State/Province**	NJ
Country	US	Postal Code	07009
Phone Number		Fax Number	
Email Address			

Additional Applicant Data may be generated within this form by selecting the Add button.

Assignee Information including Non-Applicant Assignee Information:

Providing assignment information in this section does not substitute for compliance with any requirement of part 3 of Title 37 of CFR to have an assignment recorded by the Office.

Under the Paperwork Reduction Act of 1995, no persons are required to respond to a collection of information unless it contains a valid OMB control number.

Application Data Sheet 37 CFR 1.76	Attorney Docket Number	061223-1141487
	Application Number	16/416,840
Title of Invention	POOL CLEANING SYSTEM AND METHOD TO ~~AUTOMATIALLY~~ AUTOMATICALLY CLEAN SURFACES OF A POOL USING IMAGES FROM A CAMERA	

Assignee 1

Complete this section if assignee information, including non-applicant assignee information, is desired to be included on the patent application publication. An assignee-applicant identified in the "Applicant Information" section will appear on the patent application publication as an applicant. For an assignee-applicant, complete this section only if identification as an assignee is also desired on the patent application publication.

If the Assignee or Non-Applicant Assignee is an Organization check here. ☒

Organization Name	AQUA PRODUCTS, INC.

Mailing Address Information For Assignee including Non-Applicant Assignee:

Address 1	282 Grove Avenue		
Address 2			
City	Cedar Grove	**State/Province**	NJ
Country	US	Postal Code	07009
Phone Number		Fax Number	
Email Address			

Additional Assignee or Non-Applicant Assignee Data may be generated within this form by selecting the Add button.

Signature:

NOTE: This Application Data Sheet must be signed in accordance with 37 CFR 1.33(b). **However, if this Application Data Sheet is submitted with the INITIAL filing of the application and either box A or B is not checked in subsection 2 of the "Authorization or Opt-Out of Authorization to Permit Access" section, then this form must also be signed in accordance with 37 CFR 1.14(c).**

This Application Data Sheet **must** be signed by a patent practitioner if one or more of the applicants is a **juristic entity** (e.g., corporation or association). If the applicant is two or more joint inventors, this form must be signed by a patent practitioner, **all** joint inventors who are the applicant, or one or more joint inventor-applicants who have been given power of attorney (e.g., see USPTO Form PTO/AIA/81) on behalf of **all** joint inventor-applicants.

See 37 CFR 1.4(d) for the manner of making signatures and certifications.

Signature	/ Dean W. Russell /			Date (YYYY-MM-DD)	2019-08-08
First Name	Dean	Last Name	Russell	Registration Number	33452

Additional Signature may be generated within this form by selecting the Add button.

Under the Paperwork Reduction Act of 1995, no persons are required to respond to a collection of information unless it contains a valid OMB control number.

Application Data Sheet 37 CFR 1.76	Attorney Docket Number	061223-1141487
	Application Number	16/416,840
Title of Invention	POOL CLEANING SYSTEM AND METHOD TO ~~AUTOMATIALLY~~ CLEAN SURFACES OF A POOL USING IMAGES FROM A CAMERA AUTOMATICALLY	

This collection of information is required by 37 CFR 1.76. The information is required to obtain or retain a benefit by the public which is to file (and by the USPTO to process) an application. Confidentiality is governed by 35 U.S.C. 122 and 37 CFR 1.14. This collection is estimated to take 23 minutes to complete, including gathering, preparing, and submitting the completed application data sheet form to the USPTO. Time will vary depending upon the individual case. Any comments on the amount of time you require to complete this form and/or suggestions for reducing this burden, should be sent to the Chief Information Officer, U.S. Patent and Trademark Office, U.S. Department of Commerce, P.O. Box 1450, Alexandria, VA 22313-1450. DO NOT SEND FEES OR COMPLETED FORMS TO THIS ADDRESS. **SEND TO: Commissioner for Patents, P.O. Box 1450, Alexandria, VA 22313-1450.**

Privacy Act Statement

The Privacy Act of 1974 (P.L. 93-579) requires that you be given certain information in connection with your submission of the attached form related to a patent application or patent. Accordingly, pursuant to the requirements of the Act, please be advised that: (1) the general authority for the collection of this information is 35 U.S.C. 2(b)(2); (2) furnishing of the information solicited is voluntary; and (3) the principal purpose for which the information is used by the U.S. Patent and Trademark Office is to process and/or examine your submission related to a patent application or patent. If you do not furnish the requested information, the U.S. Patent and Trademark Office may not be able to process and/or examine your submission, which may result in termination of proceedings or abandonment of the application or expiration of the patent.

The information provided by you in this form will be subject to the following routine uses:

1 The information on this form will be treated confidentially to the extent allowed under the Freedom of Information Act (5 U.S.C. 552) and the Privacy Act (5 U.S.C. 552a). Records from this system of records may be disclosed to the Department of Justice to determine whether the Freedom of Information Act requires disclosure of these records.

2. A record from this system of records may be disclosed, as a routine use, in the course of presenting evidence to a court, magistrate, or administrative tribunal, including disclosures to opposing counsel in the course of settlement negotiations.

3 A record in this system of records may be disclosed, as a routine use, to a Member of Congress submitting a request involving an individual, to whom the record pertains, when the individual has requested assistance from the Member with respect to the subject matter of the record.

4. A record in this system of records may be disclosed, as a routine use, to a contractor of the Agency having need for the information in order to perform a contract. Recipients of information shall be required to comply with the requirements of the Privacy Act of 1974, as amended, pursuant to 5 U.S.C. 552a(m).

5. A record related to an International Application filed under the Patent Cooperation Treaty in this system of records may be disclosed, as a routine use, to the International Bureau of the World Intellectual Property Organization, pursuant to the Patent CooperationTreaty.

6. A record in this system of records may be disclosed, as a routine use, to another federal agency for purposes of National Security review (35 U.S.C. 181) and for review pursuant to the Atomic Energy Act (42 U.S.C. 218(c)).

7. A record from this system of records may be disclosed, as a routine use, to the Administrator, General Services, or his/her designee, during an inspection of records conducted by GSA as part of that agency's responsibility to recommend improvements in records management practices and programs, under authority of 44 U.S.C. 2904 and 2906. Such disclosure shall be made in accordance with the GSA regulations governing inspection of records for this purpose, and any other relevant (i.e., GSA or Commerce) directive. Such disclosure shall not be used to make determinations about individuals.

8. A record from this system of records may be disclosed, as a routine use, to the public after either publication of the application pursuant to 35 U.S.C. 122(b) or issuance of a patent pursuant to 35 U.S.C. 151. Further, a record may be disclosed, subject to the limitations of 37 CFR 1.14, as a routine use, to the public if the record was filed in an application which became abandoned or in which the proceedings were terminated and which application is referenced by either a published application, an application open to public inspections or an issued patent.

9. A record from this system of records may be disclosed, as a routine use, to a Federal, State, or local law enforcement agency, if the USPTO becomes aware of a violation or potential violation of law or regulation.

Electronic Acknowledgement Receipt

EFS ID:	36828556
Application Number:	16416840
International Application Number:	
Confirmation Number:	5789
Title of Invention:	POOL CLEANING SYSTEM AND METHOD TO AUTOMATIALLY CLEAN SURFACES OF A POOL USING IMAGES FROM A CAMERA
First Named Inventor/Applicant Name:	Kameshwar Durvasula
Customer Number:	23370
Filer:	Dean W. Russell/Sandee Harvey-McCullough
Filer Authorized By:	Dean W. Russell
Attorney Docket Number:	105650-1141487
Receipt Date:	08-AUG-2019
Filing Date:	20-MAY-2019
Time Stamp:	22:20:58
Application Type:	Utility under 35 USC 111(a)

Payment information:

Submitted with Payment	no

File Listing:

Document Number	Document Description	File Name	File Size(Bytes)/ Message Digest	Multi Part /.zip	Pages (if appl.)
1	Request for Corrected Filing Receipt	1141487_REQ.pdf	95456 cb1b55bcfaa96a3f8c085e7005526eed56dc1e45	no	2

Warnings:

Information:					
2	Application Data Sheet	1141487_ADS.pdf	139858 39c95869dce42057a90621d92afa8dcab364bc01	no	9
Warnings:					
Information:					
This is not an USPTO supplied ADS fillable form					
			Total Files Size (in bytes):	235314	

This Acknowledgement Receipt evidences receipt on the noted date by the USPTO of the indicated documents, characterized by the applicant, and including page counts, where applicable. It serves as evidence of receipt similar to a Post Card, as described in MPEP 503.

<u>New Applications Under 35 U.S.C. 111</u>
If a new application is being filed and the application includes the necessary components for a filing date (see 37 CFR 1.53(b)-(d) and MPEP 506), a Filing Receipt (37 CFR 1.54) will be issued in due course and the date shown on this Acknowledgement Receipt will establish the filing date of the application.
<u>National Stage of an International Application under 35 U.S.C. 371</u>
If a timely submission to enter the national stage of an international application is compliant with the conditions of 35 U.S.C. 371 and other applicable requirements a Form PCT/DO/EO/903 indicating acceptance of the application as a national stage submission under 35 U.S.C. 371 will be issued in addition to the Filing Receipt, in due course.
<u>New International Application Filed with the USPTO as a Receiving Office</u>
If a new international application is being filed and the international application includes the necessary components for an international filing date (see PCT Article 11 and MPEP 1810), a Notification of the International Application Number and of the International Filing Date (Form PCT/RO/105) will be issued in due course, subject to prescriptions concerning national security, and the date shown on this Acknowledgement Receipt will establish the international filing date of the application.

UNITED STATES PATENT AND TRADEMARK OFFICE

UNITED STATES DEPARTMENT OF COMMERCE
United States Patent and Trademark Office
Address: COMMISSIONER FOR PATENTS
P.O. Box 1450
Alexandria, Virginia 22313-1450
www.uspto.gov

APPLICATION NUMBER	FILING or 371(c) DATE	GRP ART UNIT	FIL FEE REC'D	ATTY.DOCKET.NO	TOT CLAIMS	IND CLAIMS
16/416,840	05/20/2019	2488	1720	105650-1141487	1	1

CONFIRMATION NO. 5789
CORRECTED FILING RECEIPT

23370
KILPATRICK TOWNSEND & STOCKTON LLP
Mailstop: IP Docketing - 22
1100 PEACHTREE STREET
SUITE 2800
ATLANTA, GA 30309

OC000000110343539

Date Mailed: 08/14/2019

Receipt is acknowledged of this non-provisional utility patent application. The application will be taken up for examination in due course. Applicant will be notified as to the results of the examination. Any correspondence concerning the application must include the following identification information: the U.S. APPLICATION NUMBER, FILING DATE, NAME OF FIRST INVENTOR, and TITLE OF INVENTION. Fees transmitted by check or draft are subject to collection.

Please verify the accuracy of the data presented on this receipt. If an error is noted on this Filing Receipt, please submit a written request for a corrected Filing Receipt, including a properly marked-up ADS showing the changes with strike-through for deletions and underlining for additions. If you received a "Notice to File Missing Parts" or other Notice requiring a response for this application, please submit any request for correction to this Filing Receipt with your reply to the Notice. When the USPTO processes the reply to the Notice, the USPTO will generate another Filing Receipt incorporating the requested corrections provided that the request is grantable.

Inventor(s)

Kameshwar Durvasula, Garfield, NJ;
William Londono Correa, Bloomfield, NJ;

Applicant(s)

AQUA PRODUCTS, INC., Cedar Grove, NJ;

Assignment For Published Patent Application

AQUA PRODUCTS, INC., Cedar Grove, NJ

Power of Attorney: The patent practitioners associated with Customer Number 23370

Domestic Priority data as claimed by applicant

This application is a CON of 15/973,983 05/08/2018 PAT 10338599
which is a CON of 15/207,065 07/11/2016 PAT 9995051
which is a CON of 13/545,918 07/10/2012 PAT 9388595

Foreign Applications for which priority is claimed (You may be eligible to benefit from the **Patent Prosecution Highway** program at the USPTO. Please see http://www.uspto.gov for more information.) - None.
Foreign application information must be provided in an Application Data Sheet in order to constitute a claim to foreign priority. See 37 CFR 1.55 and 1.76.

Permission to Access Application via Priority Document Exchange: Yes

Permission to Access Search Results: Yes

Applicant may provide or rescind an authorization for access using Form PTO/SB/39 or Form PTO/SB/69 as appropriate.

If Required, Foreign Filing License Granted: 05/28/2019

The country code and number of your priority application, to be used for filing abroad under the Paris Convention, is **US 16/416,840**

Projected Publication Date: 09/05/2019

Non-Publication Request: No

Early Publication Request: No

Title

POOL CLEANING SYSTEM AND METHOD TO AUTOMATICALLY CLEAN SURFACES OF A POOL USING IMAGES FROM A CAMERA

Preliminary Class

348

Statement under 37 CFR 1.55 or 1.78 for AIA (First Inventor to File) Transition Applications: No

PROTECTING YOUR INVENTION OUTSIDE THE UNITED STATES

Since the rights granted by a U.S. patent extend only throughout the territory of the United States and have no effect in a foreign country, an inventor who wishes patent protection in another country must apply for a patent in a specific country or in regional patent offices. Applicants may wish to consider the filing of an international application under the Patent Cooperation Treaty (PCT). An international (PCT) application generally has the same effect as a regular national patent application in each PCT-member country. The PCT process **simplifies** the filing of patent applications on the same invention in member countries, but **does not result** in a grant of "an international patent" and does not eliminate the need of applicants to file additional documents and fees in countries where patent protection is desired.

Almost every country has its own patent law, and a person desiring a patent in a particular country must make an application for patent in that country in accordance with its particular laws. Since the laws of many countries differ in various respects from the patent law of the United States, applicants are advised to seek guidance from specific foreign countries to ensure that patent rights are not lost prematurely.

Applicants also are advised that in the case of inventions made in the United States, the Director of the USPTO must issue a license before applicants can apply for a patent in a foreign country. The filing of a U.S. patent application serves as a request for a foreign filing license. The application's filing receipt contains further information and guidance as to the status of applicant's license for foreign filing.

Applicants may wish to consult the USPTO booklet, "General Information Concerning Patents" (specifically, the section entitled "Treaties and Foreign Patents") for more information on timeframes and deadlines for filing foreign patent applications. The guide is available either by contacting the USPTO Contact Center at 800-786-9199, or it can be viewed on the USPTO website at http://www.uspto.gov/web/offices/pac/doc/general/index.html.

For information on preventing theft of your intellectual property (patents, trademarks and copyrights), you may wish to consult the U.S. Government website, http://www.stopfakes.gov. Part of a Department of Commerce initiative, this website includes self-help "toolkits" giving innovators guidance on how to protect intellectual property in specific

countries such as China, Korea and Mexico. For questions regarding patent enforcement issues, applicants may call the U.S. Government hotline at 1-866-999-HALT (1-866-999-4258).

LICENSE FOR FOREIGN FILING UNDER

Title 35, United States Code, Section 184

Title 37, Code of Federal Regulations, 5.11 & 5.15

GRANTED

The applicant has been granted a license under 35 U.S.C. 184, if the phrase "IF REQUIRED, FOREIGN FILING LICENSE GRANTED" followed by a date appears on this form. Such licenses are issued in all applications where the conditions for issuance of a license have been met, regardless of whether or not a license may be required as set forth in 37 CFR 5.15. The scope and limitations of this license are set forth in 37 CFR 5.15(a) unless an earlier license has been issued under 37 CFR 5.15(b). The license is subject to revocation upon written notification. The date indicated is the effective date of the license, unless an earlier license of similar scope has been granted under 37 CFR 5.13 or 5.14.

This license is to be retained by the licensee and may be used at any time on or after the effective date thereof unless it is revoked. This license is automatically transferred to any related applications(s) filed under 37 CFR 1.53(d). This license is not retroactive.

The grant of a license does not in any way lessen the responsibility of a licensee for the security of the subject matter as imposed by any Government contract or the provisions of existing laws relating to espionage and the national security or the export of technical data. Licensees should apprise themselves of current regulations especially with respect to certain countries, of other agencies, particularly the Office of Defense Trade Controls, Department of State (with respect to Arms, Munitions and Implements of War (22 CFR 121-128)); the Bureau of Industry and Security, Department of Commerce (15 CFR parts 730-774); the Office of Foreign AssetsControl, Department of Treasury (31 CFR Parts 500+) and the Department of Energy.

NOT GRANTED

No license under 35 U.S.C. 184 has been granted at this time, if the phrase "IF REQUIRED, FOREIGN FILING LICENSE GRANTED" DOES NOT appear on this form. Applicant may still petition for a license under 37 CFR 5.12, if a license is desired before the expiration of 6 months from the filing date of the application. If 6 months has lapsed from the filing date of this application and the licensee has not received any indication of a secrecy order under 35 U.S.C. 181, the licensee may foreign file the application pursuant to 37 CFR 5.15(b).

SelectUSA

The United States represents the largest, most dynamic marketplace in the world and is an unparalleled location for business investment, innovation, and commercialization of new technologies. The U.S. offers tremendous resources and advantages for those who invest and manufacture goods here. Through SelectUSA, our nation works to promote and facilitate business investment. SelectUSA provides information assistance to the international investor community; serves as an ombudsman for existing and potential investors; advocates on behalf of U.S. cities, states, and regions competing for global investment; and counsels U.S. economic development organizations on investment attraction best practices. To learn more about why the United States is the best country in the world to develop

WYBOTICS EX1009
Wybotics v. Zodiac
Page 068

technology, manufacture products, deliver services, and grow your business, visit http://www.SelectUSA.gov or call +1-202-482-6800.

UNITED STATES PATENT AND TRADEMARK OFFICE

UNITED STATES DEPARTMENT OF COMMERCE
United States Patent and Trademark Office
Address: COMMISSIONER FOR PATENTS
P.O. Box 1450
Alexandria, Virginia 22313-1450
www.uspto.gov

APPLICATION NUMBER	FILING OR 371(C) DATE	FIRST NAMED APPLICANT	ATTY. DOCKET NO./TITLE
16/416,840	05/20/2019	Kameshwar Durvasula	105650-1141487

CONFIRMATION NO. 5789

23370
KILPATRICK TOWNSEND & STOCKTON LLP
MAILSTOP: IP DOCKETING - 22
1100 PEACHTREE STREET
SUITE 2800
ATLANTA, GA 30309

PUBLICATION NOTICE

OC000000110896323

Title:POOL CLEANING SYSTEM AND METHOD TO AUTOMATICALLY CLEAN SURFACES OF A POOL USING IMAGES FROM A CAMERA

Publication No.US-2019-0271987-A1
Publication Date:09/05/2019

NOTICE OF PUBLICATION OF APPLICATION

The above-identified application will be electronically published as a patent application publication pursuant to 37 CFR 1.211, et seq. The patent application publication number and publication date are set forth above.

The publication may be accessed through the USPTO's publically available Searchable Databases via the Internet at www.uspto.gov. The direct link to access the publication is currently http://www.uspto.gov/patft/.

The publication process established by the Office does not provide for mailing a copy of the publication to applicant. A copy of the publication may be obtained from the Office upon payment of the appropriate fee set forth in 37 CFR 1.19(a)(1). Orders for copies of patent application publications are handled by the USPTO's Public Records Division. The Public Records Division can be reached by telephone at (571) 272-3150 or (800) 972-6382, by facsimile at (571) 273-3250, by mail addressed to the United States Patent and Trademark Office, Public Records Division, Alexandria, VA 22313-1450 or via the Internet.

In addition, information on the status of the application, including the mailing date of Office actions and the dates of receipt of correspondence filed in the Office, may also be accessed via the Internet through the Patent Electronic Business Center at www.uspto.gov using the public side of the Patent Application Information and Retrieval (PAIR) system. The direct link to access this status information is currently https://portal.uspto.gov/pair/PublicPair. Prior to publication, such status information is confidential and may only be obtained by applicant using the private side of PAIR.

Further assistance in electronically accessing the publication, or about PAIR, is available by calling the Patent Electronic Business Center at 1-866-217-9197.

Office of Data Managment, Application Assistance Unit (571) 272-4000, or (571) 272-4200, or 1-888-786-0101

THIRD-PARTY SUBMISSION UNDER 37 CFR 1.290
CONCISE DESCRIPTION OF RELEVANCE

Application Number	16416840

U.S. PATENTS

Cite No	Patent Number	Concise Description of Relevance

U.S. PATENT APPLICATION PUBLICATION

Cite No	Publication Number	Concise Description of Relevance
1	20130152970	Publication 20130152970 discloses a pool cleaner having a body and a means for moving the body (paragraph 36), a filter (paragraph 38), a camera (image sensor paragraph 49) coupled to a controller (paragraphs 47 and 65), generating control signals capable of directing motion of the pool cleaner; and configured to move to pool cleaner towards a part of the pool whose cleanliness level differs from a pre-determined threshold (captured image differs from reference image, paragraphs 71 and 82).

FOREIGN PATENT DOCUMENTS		
CiteNo	Foreign Document Number	Concise Description of Relevance

NON-PATENT PUBLICATIONS		
Cite No	Reference	Concise Description of Relevance

PTO/SB/429(08-12)
Approved for use through 07/31/2015. OMB 0651-0031
U.S. Patent and Trademark Office; U.S. DEPARTMENT OF COMMERCE

Under the Paperwork Reduction Act of 1995, no persons are required to respond to a collection of information unless it contains a valid OMB control number.

THIRD-PARTY SUBMISSION UNDER 37 CFR 1.290	Application Number	16416840

U.S. PATENTS

Cite No	Patent Number	Kind Code[1]	Issue Date (YYYY-MM-DD)	First Named Inventor

U.S. PATENT APPLICATION PUBLICATIONS

Cite No	Publication Number	Kind Code[1]	Publication Date (YYYY-MM-DD)	First Named Inventor
1	20130152970		2013-06-20	Porat, Joseph

FOREIGN PATENTS AND PUBLISHED FOREIGN PATENT APPLICATIONS

Cite No	Foreign Document Number[3]	Country Code[2]	Kind Code[1]	Publication Date (YYYY-MM-DD)	Applicant, Patentee or First Named Inventor	T[5]
						☐

NON-PATENT PUBLICATIONS (e.g., journal article, Office action)

Cite No	Author (if any), title of the publication, page(s) being submitted, publication date, publisher (where available), place of publication (where available).	T[5]	E[6]

THIRD-PARTY SUBMISSION UNDER 37 CFR 1.290	Application Number	16416840

		☐	☐

STATEMENTS

The party making the submission is not an individual who has a duty to disclose information with respect to the above-identified application under 37 CFR 1.56.

This submission complies with the requirements of 35 U.S.C. 122(e) and 37 CFR 1.290.

☐ The fee set forth in 37 CFR 1.290(f) has been submitted herewith.

☒ The fee set forth in 37 CFR 1.290(f) is not required because this submission lists three or fewer total items and, to the knowledge of the person signing the statement after making reasonable inquiry, this submission is the first and the only submission under 35 U.S.C 122(e) filed in the above-identified application by the party making the submission or by a party in privity with the party.

☐ This resubmission is being made responsive to a notification of non-compliance issued for an earlier filed third-party submission. The corrections in this resubmission are limited to addressing the non-compliance. As such, the party making this resubmission: (1) requests that the Office apply the previously-paid fee set forth in 37 CFR 1.290(f), or (2) states that no fee is required to accompany this resubmission as the undersigned is again making the fee exemption statement set forth in 37 CFR 1.290(g).

Signature	/Benny Attar/		
Name/Print	Benjamin Attar	Registration Number (if applicable)	

Examiner Signature		Date Considered	

*EXAMINER: Signature indicates all documents listed above have been considered,except for citations through which a line is drawn. Draw line through citation if not considered. Include a copy of this form with next communication to applicant. 1. If known, enter kind of document by the appropriate symbols as indicated on the document under WIPO Standard ST.16. See MPEP 901.04(a). 2. Enter the country or patent office that issued the document, by two-letter code under WIPO standard ST.3. See MPEP 1851. 3. For Japanese patent documents, the indication of the year of the reign of the Emperor must precede the serial number of the patent document. 4. If known, enter the kind of document by the appropriate symbols as indicated on the document under WIPO Standard ST.16 . See MPEP 901.04(a). 5. Check mark indicates translation attached. 6. Check mark indicates evidence of publication attached.

Electronic Acknowledgement Receipt

EFS ID:	37076801
Application Number:	16416840
International Application Number:	
Confirmation Number:	5789
Title of Invention:	
First Named Inventor/Applicant Name:	
Correspondence Address:	- - - - - - - - - -
Filer:	Benjamin Attar
Filer Authorized By:	
Attorney Docket Number:	
Receipt Date:	05-SEP-2019
Filing Date:	
Time Stamp:	15:12:17
Application Type:	

Payment information:

Submitted with Payment	no

File Listing:

Document Number	Document Description	File Name	File Size(Bytes)/ Message Digest	Multi Part /.zip	Pages (if appl.)
1	Concise Description of Relevance	Concise-description-generated.pdf	28090 82ebd34bd444185d0dfef0e68f1c962f7e7782d8	no	2
Warnings:					
Information:					
2	Third-Party Submission Under 37 CFR 1.290	Third-party-preissuance-submission.pdf	40477 e8f749be1559782e771096a5bbe144a41a5187d5	no	2
Warnings:					
Information:					
3	Request for Notification of Non-compliant Third-Party Submission	Third-party-notification-request.pdf	19575 67c01c56434334ef294ee3ea19c2ea0e8e119306	no	1
Warnings:					
Information:					
		Total Files Size (in bytes):	88142		

This Acknowledgement Receipt evidences receipt on the noted date by the USPTO of the indicated documents, characterized by the applicant, and including page counts, where applicable. It serves as evidence of receipt similar to a Post Card, as described in MPEP 503.

<u>New Applications Under 35 U.S.C. 111</u>
If a new application is being filed and the application includes the necessary components for a filing date (see 37 CFR 1.53(b)-(d) and MPEP 506), a Filing Receipt (37 CFR 1.54) will be issued in due course and the date shown on this Acknowledgement Receipt will establish the filing date of the application.
<u>National Stage of an International Application under 35 U.S.C. 371</u>
If a timely submission to enter the national stage of an international application is compliant with the conditions of 35 U.S.C. 371 and other applicable requirements a Form PCT/DO/EO/903 indicating acceptance of the application as a national stage submission under 35 U.S.C. 371 will be issued in addition to the Filing Receipt, in due course.
<u>New International Application Filed with the USPTO as a Receiving Office</u>
If a new international application is being filed and the international application includes the necessary components for an international filing date (see PCT Article 11 and MPEP 1810), a Notification of the International Application Number and of the International Filing Date (Form PCT/RO/105) will be issued in due course, subject to prescriptions concerning national security, and the date shown on this Acknowledgement Receipt will establish the international filing date of the application.

UNITED STATES PATENT AND TRADEMARK OFFICE

UNITED STATES DEPARTMENT OF COMMERCE
United States Patent and Trademark Office
Address: COMMISSIONER FOR PATENTS
P.O. Box 1450
Alexandria, Virginia 22313-1450
www.uspto.gov

APPLICATION NO.	FILING DATE	FIRST NAMED INVENTOR	ATTORNEY DOCKET NO.	CONFIRMATION NO.
16/416,840	05/20/2019	Kameshwar Durvasula	105650-1141487	5789

23370 7590 09/12/2019
KILPATRICK TOWNSEND & STOCKTON LLP
MAILSTOP: IP DOCKETING - 22
1100 PEACHTREE STREET
SUITE 2800
ATLANTA, GA 30309

EXAMINER
WONG, ALLEN C

ART UNIT	PAPER NUMBER
2488	

NOTIFICATION DATE	DELIVERY MODE
09/12/2019	ELECTRONIC

Please find below and/or attached an Office communication concerning this application or proceeding.

The time period for reply, if any, is set in the attached communication.

Notice of the Office communication was sent electronically on above-indicated "Notification Date" to the following e-mail address(es):

KTSDocketing2@kilpatrick.foundationip.com
ipefiling@kilpatricktownsend.com

UNITED STATES DEPARTMENT OF COMMERCE
U.S. Patent and Trademark Office
Address: COMMISSIONER FOR PATENTS
P.O. Box 1450
Alexandria, Virginia 22313-1450

APPLICATION NO./ CONTROL NO.	FILING DATE	FIRST NAMED INVENTOR/ PATENT IN REEXAMINATION	ATTORNEY DOCKET NO.
16/416,840	05/20/2019	Durvasula et al.	105650-1141487

		EXAMINER	
KILPATRICK TOWNSEND & STOCKTON LLP MAILSTOP: IP DOCKETING - 22 **1100 PEACHTREE STREET SUITE 2800** **ATLANTA, GA 30309**		JUSTIN W RIDER	
		ART UNIT	**PAPER**
		2403	20190910

DATE MAILED: _____

Please find below and/or attached an Office communication concerning this application or proceeding.

Commissioner for Patents

A third-party submission under 37 CFR 1.290 was filed on 2019-09-06 and is being entered in the above-identified application. Please allow a few days for the submission to be visible in the Patent Application Information Retrieval (PAIR) system. Note that the submission will be identified using the “Information Disclosure Statement Filed” Document Description. This Document Description is being used for the internal purposes only. The Office does not consider the submission to be an Information Disclosure Statement under 37 CFR 1.97 and 1.98.

Any questions regarding this communication should be directed to Justin W. Rider at (571) 270-1068. A secondary contact is Christopher Grant at(571) 272-7294.

/Justin W Rider/
Quality Assurance Specialist, Art Unit 2403

PTO-90C (Rev.04-03)

PTO/SB/08a (01-10)
Approved for use through 07/31/2012. OMB 0651-0031
U.S. Patent and Trademark Office; U.S. DEPARTMENT OF COMMERCE

Under the Paperwork Reduction Act of 1995, no persons are required to respond to a collection of information unless it contains a valid OMB control number.

INFORMATION DISCLOSURE STATEMENT BY APPLICANT (Not for submission under 37 CFR 1.99)		
	Application Number	16/416,840
	Filing Date	May 20, 2019
	First Named Inventor	Kameshwar Durvasula
	Art Unit	2488
	Examiner Name	Allen C. Wong
	Attorney Docket Number	105650-1141487

U.S. PATENTS

Examiner Initial*	Cite No	Patent Number	Kind Code [1]	Issue Date	Name of Patentee or Applicant of cited Document	Pages, Columns, Lines, Where Relevant Passages or Relevant Figures Appear
	1	5205174		Apr 27, 1993	Silverman et al.	
	2	5435031		Jul 25, 1995	Minami et al.	
	3	5507058		Apr 16, 1996	Minami et al.	
	4	5613261		Mar 25, 1997	Kawakami et al.	
	5	5886630		Mar 23, 1999	Menoud	
	6	7123746		Oct 17, 2006	Meniere et al.	
	7	7362351		Apr 22, 2008	Meniere et al.	
	8	7398138		Jul 8, 2008	Emery et al.	
	9	7993600		Aug 9, 2011	Doyle et al.	
	10	8007653		Aug 30, 2011	Porat	
	11	8043070		Oct 25, 2011	Stiles Jr. et al.	
	12	9388595		Jul 12, 2016	Durvasula et al.	
	13	9995051		Jun 12, 2018	Durvasula et al.	
	14	10338599		Jul 2, 2019	Durvasula et al.	

U.S. PATENT APPLICATION PUBLICATIONS

Examiner Initial*	Cite No	Publication Number	Kind Code [1]	Publication Date	Name of Patentee or Applicant of cited Document	Pages, Columns, Lines, Where Relevant Passages or Relevant Figures Appear
	15	20020097322		Jul 25, 2002	Monroe et al.	
	16	20040025268		Feb 12, 2004	Porat et al.	
	17	20040040581		Mar 4, 2004	Bruwer	
	18	20070094817		May 3, 2007	Stoltz et al.	
	19	20100299016		Nov 25, 2010	Benzler et al.	
	20	20110091329		Apr 21, 2011	Stiles Jr. et al.	
	21	20110290707		Dec 1, 2011	Porat	
	22	20110301752		Dec 8, 2011	Finezilber	

Under the Paperwork Reduction Act of 1995, no persons are required to respond to a collection of information unless it contains a valid OMB control number.

INFORMATION DISCLOSURE STATEMENT BY APPLICANT (Not for submission under 37 CFR 1.99)		
	Application Number	16/416,840
	Filing Date	May 20, 2019
	First Named Inventor	Kameshwar Durvasula
	Art Unit	2488
	Examiner Name	Allen C. Wong
	Attorney Docket Number	105650-1141487

	23	20130151061		Jun 13, 2013	Hong et al.			
	24	20130269097		Oct 17, 2013	Alammari			
	25	20140009748		Jan 9, 2014	Leonessa et al.			

FOREIGN PATENT DOCUMENTS

Examiner Initial*	Cite No	Foreign Document Number[3]	Country Code[2]	Kind Code[4]	Publication Date	Name of Patentee or Applicant of cited Document	Pages, Columns, Lines where Relevant Passages or Relevant Figures Appear	T[5]
	26	6162905	JP		Mar 31, 1986	Komatsu Ltd.	English Abstract Submitted	
	27	0687964	EP		Dec 20, 1995	Zeltron S.P.A.		
	28	0811432	EP		Dec 10, 1997	Jonas Pehrson		
	29	2004019295	WO		Mar 4, 2004	Aqua Products Inc.		
	30	101139007	CN		Mar 12, 2008	Beijing Institute of Technology	English Abstract Submitted	
	31	2009031361	WO		Mar 12, 2009	Yotsuyanagi Co., Ltd.	English Abstract Submitted	
	32	2012023676	WO		Feb 23, 2012	Pohang Institute of Intelligent Robotics		

NON-PATENT LITERATURE DOCUMENTS

Examiner Initials*	Cite No	Include name of the author (in CAPITAL LETTERS), title of the article (when appropriate), title of the item (book, magazine, journal, serial, symposium, catalog, etc.), date, page(s), volume-issue number(s), publisher, city and/or country where published.	T[5]
	33	Spanish Patent Application No. 201331047, Report of the State of the Art, February 3, 2015, 1 page.	
	34	U.S. Patent Application No. 13/545,918, Corrected Notice of Allowability mailed on June 8, 2016, 2 pages.	
	35	U.S. Patent Application No. 13/545,918, Non-Final Office Action mailed on June 26, 2015, 17 pages.	
	36	U.S. Patent Application No. 13/545,918, Notice of Allowability mailed on March 9, 2016, 8 pages.	
	37	U.S. Patent Application No. 13/545,918, Notice of Allowance mailed on December 31, 2015, 8 pages.	
	38	U.S. Patent Application No. 15/207,065, Non-Final Office Action mailed on November 6, 2017, 10 pages.	

PTO/SB/08a (01-10)
Approved for use through 07/31/2012. OMB 0651-0031
U.S. Patent and Trademark Office; U.S. DEPARTMENT OF COMMERCE

Under the Paperwork Reduction Act of 1995, no persons are required to respond to a collection of information unless it contains a valid OMB control number.

INFORMATION DISCLOSURE STATEMENT BY APPLICANT (Not for submission under 37 CFR 1.99)		
	Application Number	16/416,840
	Filing Date	May 20, 2019
	First Named Inventor	Kameshwar Durvasula
	Art Unit	2488
	Examiner Name	Allen C. Wong
	Attorney Docket Number	105650-1141487

	39	U.S. Patent Application No. 15/207,065, Notice of Allowance mailed on February 23, 2018, 9 pages.	
	40	U.S. Patent Application No. 15/973,983, Non-Final Office Action mailed on November 6, 2018, 7 pages.	
	41	U.S. Patent Application No. 15/973,983, Notice of Allowance mailed on March 4, 2019, 9 pages.	

EXAMINER SIGNATURE

Examiner Signature		Date Considered	

*EXAMINER: Initial if reference considered, whether or not citation is in conformance with MPEP 609. Draw line through a citation if not in conformance and not considered. Include copy of this form with next communication to applicant.

[1] See Kind Codes of USPTO Patent Documents at www.USPTO.GOV or MPEP 901.04. [2] Enter office that issued the document, by the two-letter code (WIPO Standard ST.3). [3] For Japanese patent documents, the indication of the year of the reign of the Emperor must precede the serial number of the patent document.
[4] Kind of document by the appropriate symbols as indicated on the document under WIPO Standard ST.16 if possible. [5] Applicant is to place a check mark here if English language translation is attached.

PTO/SB/08a (01-10)
Approved for use through 07/31/2012. OMB 0651-0031
U.S. Patent and Trademark Office; U.S. DEPARTMENT OF COMMERCE

Under the Paperwork Reduction Act of 1995, no persons are required to respond to a collection of information unless it contains a valid OMB control number.

INFORMATION DISCLOSURE STATEMENT BY APPLICANT (Not for submission under 37 CFR 1.99)		
	Application Number	16/416,840
	Filing Date	May 20, 2019
	First Named Inventor	Kameshwar Durvasula
	Art Unit	2488
	Examiner Name	Allen C. Wong
	Attorney Docket Number	105650-1141487

CERTIFICATION STATEMENT

Please see 37 CFR 1.97 and 1.98 to make the appropriate selection(s):

☐ That each item of information contained in the information disclosure statement was first cited in any communication from a foreign patent office in a counterpart foreign application not more than three months prior to the filing of the information disclosure statement. See 37 CFR 1.97(e) (1).

OR

☐ That no item of information contained in the information disclosure statement was cited in a communication from a foreign patent office in a counterpart foreign application, and, to the knowledge of the person signing the certification after making reasonable inquiry, no item of information contained in the information disclosure statement was known to any individual designated in 37 CFR 1.56(c) more than three months prior to the filing of the information disclosure statement. See 37 CFR 1.97(e) (2).

☐ See attached certification statement.

☐ The fee set forth in 37 CFR 1.17 (p) has been submitted herewith.

☒ A certification statement is not submitted herewith.

SIGNATURE

A signature of the applicant or representative is required in accordance with CFR 1.33, 10.18. Please see CFR 1.4(d) for the form of the signature.

Signature	/Dean W. Russell/	Date (YYYY-MM-DD)	2019-09-12
Name/Print	Dean W. Russell	Registration Number	33,452

This collection of information is required by 37 CFR 1.97 and 1.98. The information is required to obtain or retain a benefit by the public which is to file (and by the USPTO to process) an application. Confidentiality is governed by 35 U.S.C. 122 and 37 CFR 1.14. This collection is estimated to take 1 hour to complete, including gathering, preparing and submitting the completed application form to the USPTO. Time will vary depending upon the individual case. Any comments on the amount of time you require to complete this form and/or suggestions for reducing this burden, should be sent to the Chief Information Officer, U.S. Patent and Trademark Office, U.S. Department of Commerce, P.O. Box 1450, Alexandria, VA 22313-1450. DO NOT SEND FEES OR COMPLETED FORMS TO THIS ADDRESS. **SEND TO: Commissioner for Patents, P.O. Box 1450, Alexandria, VA 22313-1450.**

Electronic Acknowledgement Receipt

EFS ID:	37146690
Application Number:	16416840
International Application Number:	
Confirmation Number:	5789
Title of Invention:	POOL CLEANING SYSTEM AND METHOD TO AUTOMATICALLY CLEAN SURFACES OF A POOL USING IMAGES FROM A CAMERA
First Named Inventor/Applicant Name:	Kameshwar Durvasula
Customer Number:	23370
Filer:	Dean W. Russell/Sandee Harvey-McCullough
Filer Authorized By:	Dean W. Russell
Attorney Docket Number:	105650-1141487
Receipt Date:	12-SEP-2019
Filing Date:	20-MAY-2019
Time Stamp:	14:33:16
Application Type:	Utility under 35 USC 111(a)

Payment information:

Submitted with Payment	no

File Listing:

Document Number	Document Description	File Name	File Size(Bytes)/ Message Digest	Multi Part /.zip	Pages (if appl.)
1	Transmittal Letter	1141487_IDSTRANS.pdf	94581 9923e55a9fd8b512aa60d9da8716f2b5019bf7b5	no	3

Warnings:

Information:					
2	Information Disclosure Statement (IDS) Form (SB08)	1141487_IDS.pdf	196256 78ca05698b2dde019814f7f895f7f1a2c6ed2f0a	no	4
Warnings:					
Information:					
This is not an USPTO supplied IDS fillable form					
			Total Files Size (in bytes):	290837	

This Acknowledgement Receipt evidences receipt on the noted date by the USPTO of the indicated documents, characterized by the applicant, and including page counts, where applicable. It serves as evidence of receipt similar to a Post Card, as described in MPEP 503.

<u>New Applications Under 35 U.S.C. 111</u>
If a new application is being filed and the application includes the necessary components for a filing date (see 37 CFR 1.53(b)-(d) and MPEP 506), a Filing Receipt (37 CFR 1.54) will be issued in due course and the date shown on this Acknowledgement Receipt will establish the filing date of the application.
<u>National Stage of an International Application under 35 U.S.C. 371</u>
If a timely submission to enter the national stage of an international application is compliant with the conditions of 35 U.S.C. 371 and other applicable requirements a Form PCT/DO/EO/903 indicating acceptance of the application as a national stage submission under 35 U.S.C. 371 will be issued in addition to the Filing Receipt, in due course.
<u>New International Application Filed with the USPTO as a Receiving Office</u>
If a new international application is being filed and the international application includes the necessary components for an international filing date (see PCT Article 11 and MPEP 1810), a Notification of the International Application Number and of the International Filing Date (Form PCT/RO/105) will be issued in due course, subject to prescriptions concerning national security, and the date shown on this Acknowledgement Receipt will establish the international filing date of the application.

I hereby certify that this correspondence is being filed via EFS-Web with the United States Patent and Trademark Office on 2019-09-12.

KILPATRICK TOWNSEND & STOCKTON LLP

By: Sandee Harvey /Sandee Harvey/

PATENT
Attorney Docket No.: 105650-1141487

IN THE UNITED STATES PATENT AND TRADEMARK OFFICE

In re Application of:	Confirmation No.: 5789
Kameshwar Durvasula	Examiner: Allen C. Wong
Application No.: 16/416,840	Technology Center/Art Unit: 2488
Filed: May 20, 2019	
For: POOL CLEANING SYSTEM AND METHOD TO AUTOMATICALLY CLEAN SURFACES OF A POOL USING IMAGES FROM A CAMERA	INFORMATION DISCLOSURE STATEMENT
Customer No.: 23370	

Commissioner for Patents
P.O. Box 1450
Alexandria, VA 22313-1450

Commissioner:

The references cited on attached form PTO/SB/08A are being called to the attention of the Examiner. In accordance with the provisions of 37 CFR §1.98(a)(2), copies of any cited U.S. Patents and U.S. Patent Application Publications are not provided. Copies of the references are not enclosed.

In accordance with the Waiver of the Copy Requirements in 37 CFR §1.98 for Cited Pending U.S. Patent Applications, 1287 O.G. 163 (October 19, 2004), a copy of any cited, unpublished US Patent Application is available in the IFW and, therefore, not provided.

In accordance with 37 CFR §1.98(d), copies of the references can be found in U.S. Patent Application No. 15/973,983 filed May 8, 2018, now U.S. Patent No. 10,338,599; U.S. Patent

WYBOTICS EX1009
Wybotics v. Zodiac
Page 085

Application No. 15/207,065 filed July 11, 2016, now U.S. Patent No. 9,995,051 and U.S. Patent Application No. 13/545,918 filed July 10, 2012, now U.S. Patent No. 9,388,595.

The following applications are related to this application: U.S. Patent Application No. 15/973,983 filed May 8, 2018, now U.S. Patent No. 10,338,599; U.S. Patent Application No. 15/207,065 filed July 11, 2016, now U.S. Patent No. 9,995,051 and U.S. Patent Application No. 13/545,918 filed July 10, 2012, now U.S. Patent No. 9,388,595. Copies of any Office Actions in such Patent Applications are available via the USPTO's PAIR or electronic file wrapper system and are believed to be readily accessible to the Examiner. Thus, although Applicant may submit copies of some such Office Actions, Applicant does not represent that copies of all, or the most significant, Office Actions are being supplied. If the Examiner desires copies of all such Office Actions, the Examiner should contact the undersigned.

It is respectfully requested that the cited references be expressly considered during the prosecution of this application, and the references be made of record therein and appear among the "references cited" on any patent to issue therefrom.

As provided for by 37 CFR §1.97(g) and (h), no inference should be made that the information and references cited are prior art merely because they are in this statement and no representation is being made that a search has been conducted or that this statement encompasses all the possible relevant information.

WYBOTICS EX1009
Wybotics v. Zodiac
Page 086

This Information Disclosure Statement is being filed before the mailing date of the first Office Action on the merits. Applicant believes that no fee is required for submission of this statement. However, if any additional fees are due for the submission of this Information Disclosure Statement, please deduct those fees from Deposit Account No. 20-1430.

Respectfully submitted,

/Dean W. Russell/

Dean W. Russell
Registration No. 33,452

KILPATRICK TOWNSEND & STOCKTON LLP

15953855V.1

WYBOTICS EX1009
Wybotics v. Zodiac
Page 087

UNITED STATES PATENT AND TRADEMARK OFFICE

UNITED STATES DEPARTMENT OF COMMERCE
United States Patent and Trademark Office
Address: COMMISSIONER FOR PATENTS
P.O. Box 1450
Alexandria, Virginia 22313-1450
www.uspto.gov

APPLICATION NO.	FILING DATE	FIRST NAMED INVENTOR	ATTORNEY DOCKET NO.	CONFIRMATION NO.
16/416,840	05/20/2019	Kameshwar Durvasula	105650-1141487	5789

23370 7590 01/15/2020
KILPATRICK TOWNSEND & STOCKTON LLP
MAILSTOP: IP DOCKETING - 22
1100 PEACHTREE STREET
SUITE 2800
ATLANTA, GA 30309

EXAMINER
WONG, ALLEN C

ART UNIT	PAPER NUMBER
2488	

NOTIFICATION DATE	DELIVERY MODE
01/15/2020	ELECTRONIC

Please find below and/or attached an Office communication concerning this application or proceeding.

The time period for reply, if any, is set in the attached communication.

Notice of the Office communication was sent electronically on above-indicated "Notification Date" to the following e-mail address(es):

KTSDocketing2@kilpatrick.foundationip.com
ipefiling@kilpatricktownsend.com

Office Action Summary	Application No. 16/416,840	Applicant(s) Durvasula et al.	
	Examiner ALLEN C WONG	Art Unit 2488	AIA (FITF) Status Yes

-- The MAILING DATE of this communication appears on the cover sheet with the correspondence address --

Period for Reply

A SHORTENED STATUTORY PERIOD FOR REPLY IS SET TO EXPIRE 3 MONTHS FROM THE MAILING DATE OF THIS COMMUNICATION.

- Extensions of time may be available under the provisions of 37 CFR 1.136(a). In no event, however, may a reply be timely filed after SIX (6) MONTHS from the mailing date of this communication.
- If NO period for reply is specified above, the maximum statutory period will apply and will expire SIX (6) MONTHS from the mailing date of this communication.
- Failure to reply within the set or extended period for reply will, by statute, cause the application to become ABANDONED (35 U.S.C. § 133). Any reply received by the Office later than three months after the mailing date of this communication, even if timely filed, may reduce any earned patent term adjustment. See 37 CFR 1.704(b).

Status

1)☐ Responsive to communication(s) filed on _____.

☐ A declaration(s)/affidavit(s) under **37 CFR 1.130(b)** was/were filed on _____.

2a)☐ This action is **FINAL.** 2b) ☑ This action is non-final.

3)☐ An election was made by the applicant in response to a restriction requirement set forth during the interview on _____; the restriction requirement and election have been incorporated into this action.

4)☐ Since this application is in condition for allowance except for formal matters, prosecution as to the merits is closed in accordance with the practice under *Ex parte Quayle*, 1935 C.D. 11, 453 O.G. 213.

Disposition of Claims*

5) ☑ Claim(s) 20 is/are pending in the application.

5a) Of the above claim(s) _____ is/are withdrawn from consideration.

6) ☐ Claim(s) _____ is/are allowed.

7) ☑ Claim(s) 20 is/are rejected.

8) ☐ Claim(s) _____ is/are objected to.

9) ☐ Claim(s) _____ are subject to restriction and/or election requirement

* If any claims have been determined allowable, you may be eligible to benefit from the **Patent Prosecution Highway** program at a participating intellectual property office for the corresponding application. For more information, please see http://www.uspto.gov/patents/init_events/pph/index.jsp or send an inquiry to **PPHfeedback@uspto.gov.**

Application Papers

10)☐ The specification is objected to by the Examiner.

11)☑ The drawing(s) filed on 5/20/19 is/are: a)☑ accepted or b)☐ objected to by the Examiner.

Applicant may not request that any objection to the drawing(s) be held in abeyance. See 37 CFR 1.85(a).

Replacement drawing sheet(s) including the correction is required if the drawing(s) is objected to. See 37 CFR 1.121(d).

Priority under 35 U.S.C. § 119

12)☐ Acknowledgment is made of a claim for foreign priority under 35 U.S.C. § 119(a)-(d) or (f).

Certified copies:

a)☐ All b)☐ Some** c)☐ None of the:

1.☐ Certified copies of the priority documents have been received.

2.☐ Certified copies of the priority documents have been received in Application No. _____.

3.☐ Copies of the certified copies of the priority documents have been received in this National Stage application from the International Bureau (PCT Rule 17.2(a)).

** See the attached detailed Office action for a list of the certified copies not received.

Attachment(s)

1) ☑ Notice of References Cited (PTO-892)

2) ☑ Information Disclosure Statement(s) (PTO/SB/08a and/or PTO/SB/08b) Paper No(s)/Mail Date _____.

3) ☐ Interview Summary (PTO-413) Paper No(s)/Mail Date _____.

4) ☐ Other: _____.

WYBOTICS EX1009
Wybotics v. Zodiac
Page 089

DETAILED ACTION

Notice of Pre-AIA or AIA Status

The present application, filed on or after March 16, 2013, is being examined under the first inventor to file provisions of the AIA.

Claim Rejections - 35 USC § 102

In the event the determination of the status of the application as subject to AIA 35 U.S.C. 102 and 103 (or as subject to pre-AIA 35 U.S.C. 102 and 103) is incorrect, any correction of the statutory basis for the rejection will not be considered a new ground of rejection if the prior art relied upon, and the rationale supporting the rejection, would be the same under either status.

The following is a quotation of the appropriate paragraphs of 35 U.S.C. 102 that form the basis for the rejections under this section made in this Office action:

A person shall be entitled to a patent unless –

(a)(2) the claimed invention was described in a patent issued under section 151, or in an application for patent published or deemed published under section 122(b), in which the patent or application, as the case may be, names another inventor and was effectively filed before the effective filing date of the claimed invention.

Claim 20 is rejected under 35 U.S.C. 102(a)(2) as being anticipated by Porat (US 2013/0152970).

Regarding claim 20, Porat discloses a self-propelled pool cleaner (paragraph [36], fig.1, element 10) for cleaning debris from a submerged surface of a swimming pool (paragraph [36], Porat discloses an automatic pool cleaner 10 for cleaning surface of the pool that includes foreign objects and debris), comprising:

a vehicle body (paragraph [26], Porat discloses automatic pool cleaner 10 has a housing 80 or vehicle body that houses the components of the automatic pool cleaner 10);

means for moving the vehicle body within the swimming pool (paragraph [36], Porat discloses automatic pool cleaner 10 has drive wheels 30 and track 40; paragraph [55], Porat discloses motor 250 can power wheels 30 for driving the movement of the automatic pool cleaner in that motors 240 and 250 are connected to control unit 280 for driving the vehicle body the pool cleaner, and paragraph [56], Porat discloses batteries are utilized to power the motors 240 and 250; and paragraph [82], Porat discloses that when a foreign object is detected based on the comparison of the current image with reference

image, then automatic pool cleaner employs an algorithm for moving toward the foreign object for cleaning out the foreign object or debris);

a filter configured to retain debris collected from the submerged surface (paragraph [38], Porat discloses that automatic pool cleaner comprises a filter unit for retaining debris, dirt and/or other foreign objects);

at least one camera (fig.1, element 60) positioned on or in the body for capturing an image of at least a first portion of the submerged surface (paragraph [36], Porat discloses a sensor 60 for obtaining image data, wherein paragraph [49], Porat discloses that sensor 60 can comprise an image sensor for capturing image data of the submerged surface of the pool, wherein paragraph [65], Porat discloses that housing 80 of automatic pool cleaner 10 has a sensor housing 180 for housing sensor 60, and that sensor can be positioned on or in the vehicle body (housing) of the pool cleaner 10, and paragraph [50], Porat discloses sensor 60 is mounted on the front part of the vehicle body of the automatic pool cleaner 10, as well as the back of the automatic pool cleaner 10); and

a controller (i) positioned on or in the body (paragraph [47], Porat discloses that sensor 60 is coupled to the control unit, and paragraph [65], Porat discloses the sensor 60 is configured to be communication with control unit via cable 170), (ii) in electronic communication with the at least one camera (paragraph [47], Porat discloses that sensor 60 is coupled to the control unit, and paragraph [65], Porat discloses the sensor 60 is configured to be communication with control unit via cable 170 for permitting electrical communicating between the control unit and the optical sensor 60), and (iii) configured to generate at least one control signal to cause movement of the body within the swimming pool to the first portion of the submerged surface (paragraph [82], Porat discloses that when a foreign object is detected based on the comparison of the current image with reference image, then automatic pool cleaner employs an algorithm for moving toward the foreign object for cleaning out the foreign object or debris) when the captured image fails to satisfy a pre-defined threshold (paragraph [71], Porat discloses that image sensor provides a captured image that is utilized for comparison with a reference image based on the uniform coloring of the pool, and if the coloring of the captured image does not match with the coloring of the reference image of the pool, then a foreign object is detected).

Double Patenting

The nonstatutory double patenting rejection is based on a judicially created doctrine grounded in public policy (a policy reflected in the statute) so as to prevent the unjustified or improper timewise extension of the "right to exclude" granted by a patent and to prevent possible harassment by multiple assignees. A nonstatutory double patenting rejection is appropriate where the conflicting claims are not identical, but at least one examined application claim is not patentably distinct from the reference claim(s) because the examined application claim is either anticipated by, or would have been obvious over, the reference claim(s). See, e.g., *In re Berg*, 140 F.3d 1428, 46 USPQ2d 1226 (Fed. Cir. 1998); *In re Goodman*, 11 F.3d 1046, 29 USPQ2d 2010 (Fed. Cir. 1993); *In re Longi*, 759 F.2d 887, 225 USPQ 645 (Fed. Cir. 1985); *In re Van Ornum*, 686 F.2d 937, 214 USPQ 761 (CCPA 1982); *In re Vogel*, 422 F.2d 438, 164 USPQ 619 (CCPA 1970); *In re Thorington*, 418 F.2d 528, 163 USPQ 644 (CCPA 1969).

A timely filed terminal disclaimer in compliance with 37 CFR 1.321(c) or 1.321(d) may be used to overcome an actual or provisional rejection based on nonstatutory double patenting provided the reference application or patent either is shown to be commonly owned with the examined application, or claims an invention made as a result of activities undertaken within the scope of a joint research agreement. See MPEP § 717.02 for applications subject to examination under the first inventor to file provisions of the AIA as explained in MPEP § 2159. See MPEP §§ 706.02(l)(1) - 706.02(l)(3) for applications not subject to examination under the first inventor to file provisions of the AIA. A terminal disclaimer must be signed in compliance with 37 CFR 1.321(b).

The USPTO Internet website contains terminal disclaimer forms which may be used. Please visit www.uspto.gov/patent/patents-forms. The filing date of the application in which the form is filed determines what form (e.g., PTO/SB/25, PTO/SB/26, PTO/AIA/25, or PTO/AIA/26) should be used. A web-based eTerminal Disclaimer may be filled out completely online using web-screens. An eTerminal Disclaimer that meets all requirements is auto-processed and approved immediately upon submission. For more information about eTerminal Disclaimers, refer to www.uspto.gov/patents/process/file/efs/guidance/eTD-info-I.jsp.

Claim 20 is rejected on the ground of nonstatutory double patenting as being unpatentable over claim 1 of U.S. Patent No. 9,995,051 in view of Porat (US 2013/0152970).

Claim 1 of Patent '051 discloses:

"A pool cleaning system for cleaning debris from a submerged surface of a swimming pool comprising:

a self-propelled pool cleaner having rotatably-mounted supports for supporting and guiding the cleaner on the pool surface;

a filter configured to retain the debris collected from the submerged surface of the swimming pool;

an electric motor for enabling the rotation of the rotatably-mounted supports on the pool surface; at least one camera to capture imagery of the pool surface;

a controller, in electronic communication with the at least one camera, to determine a cleanliness characteristic of the pool surface on which the cleaner has passed based on the camera imagery and generate a control signal to direct movement of the cleaner based on the cleanliness characteristic of the pool surface, wherein the control signal directs movement of the cleaner to reclean a portion of the pool surface where the cleanliness characteristic fails to satisfy a predefined threshold".

Claim 20 of present Application '840 discloses:

"A self-propelled pool cleaner for cleaning debris from a submerged surface of a swimming pool, comprising:

a vehicle body;

means for moving the vehicle body within the swimming pool;

a filter configured to retain debris collected from the submerged surface;

at least one camera positioned on or in the body for capturing an image of at least a first portion of the submerged surface; and

a controller (i) positioned on or in the body, (ii) in electronic communication with the at least one camera, and (iii) configured to generate at least one control signal to cause movement of the body within the swimming pool to the first portion of the submerged surface when the captured image fails to satisfy a pre-defined threshold".

Although both claim 1 of Patent '051 and claim 20 of present Application '840 disclose "self-propelled pool cleaner…", and claim 1 of Patent '051 discloses "a self-propelled pool cleaner having rotatably-mounted supports… electrical motor for enabling the rotation of the rotatably-mounted supports

on the pool surface", and similarly, claim 20 of Application '840 discloses "means for moving the body within the swimming pool…" Claim 1 of Patent '051 discloses "a filter configured to retain the debris…", and similarly, claim 20 of Application '840 discloses "a filter configured to retain debris…" Claim 1 of Patent '051 discloses "at least one camera to capture imagery of the pool surface…", and similarly, claim 20 of Application '840 discloses "at least one camera… capturing an image…" Claim 1 of Patent '051 discloses "a controller, in electronic communication with the at least one camera… generate a control signal to direct movement… where the cleanliness characteristic fails to satisfy a predefined threshold", and similarly, claim 20 of Application '840 discloses "a controller… electronic communication with the at least one camera… generate at least one control signal to cause movement… when the captured image fails to satisfy a pre-defined threshold".

Claim 1 of Patent '051 does not disclose a vehicle body, however, Porat teaches implementing a vehicle body (paragraph [26], Porat discloses automatic pool cleaner 10 has a housing 80 or vehicle body that houses the components of the automatic pool cleaner 10). Therefore, it would have been obvious to one of ordinary skill in the art before the effective filing date of the claimed invention to combine the teachings of claim 1 of Patent '051 and Porat together as a whole for permitting the housing of parts with a vehicle body in order to properly protect the internal parts of the pool cleaner so as to ensure proper operation of the pool cleaner.

Contact Information

Any inquiry concerning this communication or earlier communications from the examiner should be directed to ALLEN C WONG whose telephone number is (571)272-7341. The examiner can normally be reached on Flex Monday-Thursday 9:30am-7:30pm.

Examiner interviews are available via telephone, in-person, and video conferencing using a USPTO supplied web-based collaboration tool. To schedule an interview, applicant is encouraged to use the USPTO Automated Interview Request (AIR) at http://www.uspto.gov/interviewpractice.

If attempts to reach the examiner by telephone are unsuccessful, the examiner's supervisor, Sath V Perungavoor can be reached on 571-272-7455. The fax phone number for the organization where this application or proceeding is assigned is 571-273-8300.

Information regarding the status of an application may be obtained from the Patent Application Information Retrieval (PAIR) system. Status information for published applications may be obtained from either Private PAIR or Public PAIR. Status information for unpublished applications is available through Private PAIR only. For more information about the PAIR system, see http://pair-direct.uspto.gov. Should you have questions on access to the Private PAIR system, contact the Electronic Business Center (EBC) at 866-217-9197 (toll-free). If you would like assistance from a USPTO Customer Service Representative or access to the automated information system, call 800-786-9199 (IN USA OR CANADA) or 571-272-1000.

/ALLEN C WONG/
Primary Examiner, Art Unit 2488

Notice of References Cited	Application/Control No. 16/416,840	Applicant(s)/Patent Under Reexamination Durvasula et al.	
	Examiner ALLEN C WONG	Art Unit 2488	Page 1 of 1

U.S. PATENT DOCUMENTS

*		Document Number Country Code-Number-Kind Code	Date MM-YYYY	Name	CPC Classification	US Classification
*	A	US-20130152970-A1	06-2013	PORAT; Joseph	E04H4/1654	134/18
	B					
	C					
	D					
	E					
	F					
	G					
	H					
	I					
	J					
	K					
	L					
	M					

FOREIGN PATENT DOCUMENTS

*		Document Number Country Code-Number-Kind Code	Date MM-YYYY	Country	Name	CPC Classification
	N					
	O					
	P					
	Q					
	R					
	S					
	T					

NON-PATENT DOCUMENTS

*		Include as applicable: Author, Title Date, Publisher, Edition or Volume, Pertinent Pages)
	U	
	V	
	W	
	X	

*A copy of this reference is not being furnished with this Office action. (See MPEP § 707.05(a).)
Dates in MM-YYYY format are publication dates. Classifications may be US or foreign.

Index of Claims	Application/Control No.	Applicant(s)/Patent Under Reexamination
	16/416,840	Durvasula et al.
	Examiner	**Art Unit**
	ALLEN C WONG	2488

✓	Rejected	-	Cancelled	N	Non-Elected	A	Appeal
=	Allowed	÷	Restricted	I	Interference	O	Objected

CLAIMS

☐ Claims renumbered in the same order as presented by applicant ☐ CPA ☐ T.D. ☐ R.1.47

CLAIM		DATE								
Final	Original	01/09/2020								
	1	-								
	2	-								
	3	-								
	4	-								
	5	-								
	6	-								
	7	-								
	8	-								
	9	-								
	10	-								
	11	-								
	12	-								
	13	-								
	14	-								
	15	-								
	16	-								
	17	-								
	18	-								
	19	-								
	20	✓								

Search Notes	Application/Control No.	Applicant(s)/Patent Under Reexamination
	16/416,840	Durvasula et al.
	Examiner	**Art Unit**
	ALLEN C WONG	2488

CPC - Searched*		
Symbol	**Date**	**Examiner**
G05D 1/0246, 0016, 0033, 0038, 0206, 0253; G05D 2201/0203; H04N 5/23203; H04N 7/18; H04N 2005/2255; E04H 4/1654; G06T 7/90, 001; G06T 2207/10024; B08B 9/08, 46	01/09/2020	AW

CPC Combination Sets - Searched*		
Symbol	**Date**	**Examiner**

US Classification - Searched*			
Class	**Subclass**	**Date**	**Examiner**
348	114	01/09/2020	AW

* See search history printout included with this form or the SEARCH NOTES box below to determine the scope of the search.

Search Notes		
Search Notes	**Date**	**Examiner**
refs checked (US Patent Nos.9388595, 9995051, 10338599)	01/09/2020	AW
Inventor Names search	01/09/2020	AW
NPL search (eg. Google Scholar)	01/09/2020	AW
EAST text search	01/09/2020	AW
G05D 1/0246, 0016, 0033, 0038, 0206, 0253; G05D 2201/0203; H04N 5/23203; H04N 7/18; H04N 2005/2255; E04H 4/1654; G06T 7/90, 001; G06T 2207/10024; B08B 9/08, 46 (see search history printout)	01/09/2020	AW

/ALLEN C WONG/ Primary Examiner, Art Unit 2488	

WYBOTICS EX1009
Wybotics v. Zodiac
Page 098

Search Notes	Application/Control No.	Applicant(s)/Patent Under Reexamination
	16/416,840	Durvasula et al.
	Examiner	**Art Unit**
	ALLEN C WONG	2488

Interference Search			
US Class/CPC Symbol	**US Subclass/CPC Group**	**Date**	**Examiner**

/ALLEN C WONG/ Primary Examiner, Art Unit 2488	

WYBOTICS EX1099
Wybotics v. Zodiac
Page 099

Doc code: IDS
Doc description: Information Disclosure Statement (IDS) Field

PTO/SB/08a (01-10)
Approved for use through 07/31/2012. OMB 0651-0031
U.S. Patent and Trademark Office; U.S. DEPARTMENT OF COMMERCE
Under the Paperwork Reduction Act of 1995, no persons are required to respond to a collection of information unless it contains a valid OMB control number.

INFORMATION DISCLOSURE STATEMENT BY APPLICANT (Not for submission under 37 CFR 1.99)		
	Application Number	16/416,840
	Filing Date	May 20, 2019
	First Named Inventor	Kameshwar Durvasula
	Art Unit	2488
	Examiner Name	Allen C. Wong
	Attorney Docket Number	105650-1141487

U.S. PATENTS

Examiner Initial*	Cite No	Patent Number	Kind Code [1]	Issue Date	Name of Patentee or Applicant of cited Document	Pages, Columns, Lines, Where Relevant Passages or Relevant Figures Appear
	1	5205174		Apr 27, 1993	Silverman et al.	
	2	5435031		Jul 25, 1995	Minami et al.	
	3	5507058		Apr 16, 1996	Minami et al.	
	4	5613261		Mar 25, 1997	Kawakami et al.	
	5	5886630		Mar 23, 1999	Menoud	
	6	7123746		Oct 17, 2006	Meniere et al.	
	7	7362351		Apr 22, 2008	Meniere et al.	
	8	7398138		Jul 8, 2008	Emery et al.	
	9	7993600		Aug 9, 2011	Doyle et al.	
	10	8007653		Aug 30, 2011	Porat	
	11	8043070		Oct 25, 2011	Stiles Jr. et al.	
	12	9388595		Jul 12, 2016	Durvasula et al.	
	13	9995051		Jun 12, 2018	Durvasula et al.	
	14	10338599		Jul 2, 2019	Durvasula et al.	

U.S. PATENT APPLICATION PUBLICATIONS

Examiner Initial*	Cite No	Publication Number	Kind Code [1]	Publication Date	Name of Patentee or Applicant of cited Document	Pages, Columns, Lines, Where Relevant Passages or Relevant Figures Appear
	15	20020097322		Jul 25, 2002	Monroe et al.	
	16	20040025268		Feb 12, 2004	Porat et al.	
	17	20040040581		Mar 4, 2004	Bruwer	
	18	20070094817		May 3, 2007	Stoltz et al.	
	19	20100299016		Nov 25, 2010	Benzler et al.	
	20	20110091329		Apr 21, 2011	Stiles Jr. et al.	
	21	20110290707		Dec 1, 2011	Porat	
	22	20110301752		Dec 8, 2011	Finezilber	

ALL REFERENCES CONSIDERED EXCEPT WHERE LINED THROUGH. /A.W./

/ALLEN C WONG/ 01/09/2020

Doc code: IDS
Doc description: Information Disclosure Statement (IDS) Field

PTO/SB/08a (01-10)
Approved for use through 07/31/2012. OMB 0651-0031
U.S. Patent and Trademark Office; U.S. DEPARTMENT OF COMMERCE
Under the Paperwork Reduction Act of 1995, no persons are required to respond to a collection of information unless it contains a valid OMB control number.

INFORMATION DISCLOSURE STATEMENT BY APPLICANT (Not for submission under 37 CFR 1.99)		
	Application Number	16/416,840
	Filing Date	May 20, 2019
	First Named Inventor	Kameshwar Durvasula
	Art Unit	2488
	Examiner Name	Allen C. Wong
	Attorney Docket Number	105650-1141487

	23	20130151061		Jun 13, 2013	Hong et al.			
	24	20130269097		Oct 17, 2013	Alammari			
	25	20140009748		Jan 9, 2014	Leonessa et al.			

FOREIGN PATENT DOCUMENTS

Examiner Initial*	Cite No	Foreign Document Number[3]	Country Code[2]	Kind Code[4]	Publication Date	Name of Patentee or Applicant of cited Document	Pages, Columns, Lines where Relevant Passages or Relevant Figures Appear	T[5]
	26	6162905	JP		Mar 31, 1986	Komatsu Ltd.	English Abstract Submitted	
	27	0687964	EP		Dec 20, 1995	Zeltron S.P.A.		
	28	0811432	EP		Dec 10, 1997	Jonas Pehrson		
	29	2004019295	WO		Mar 4, 2004	Aqua Products Inc.		
	30	101139007	CN		Mar 12, 2008	Beijing Institute of Technology	English Abstract Submitted	
	31	2009031361	WO		Mar 12, 2009	Yotsuyanagi Co., Ltd.	English Abstract Submitted	
	32	2012023676	WO		Feb 23, 2012	Pohang Institute of Intelligent Robotics		

NON-PATENT LITERATURE DOCUMENTS

Examiner Initials*	Cite No	Include name of the author (in CAPITAL LETTERS), title of the article (when appropriate), title of the item (book, magazine, journal, serial, symposium, catalog, etc.), date, page(s), volume-issue number(s), publisher, city and/or country where published.	T[5]
	33	Spanish Patent Application No. 201331047, Report of the State of the Art, February 3, 2015, 1 page.	
	34	U.S. Patent Application No. 13/545,918, Corrected Notice of Allowability mailed on June 8, 2016, 2 pages.	
	35	U.S. Patent Application No. 13/545,918, Non-Final Office Action mailed on June 26, 2015, 17 pages.	
	36	U.S. Patent Application No. 13/545,918, Notice of Allowability mailed on March 9, 2016, 8 pages.	
	37	U.S. Patent Application No. 13/545,918, Notice of Allowance mailed on December 31, 2015, 8 pages.	
	38	U.S. Patent Application No. 15/207,065, Non-Final Office Action mailed on November 6, 2017, 10 pages.	

ALL REFERENCES CONSIDERED EXCEPT WHERE LINED THROUGH. /A.W./

/ALLEN C WONG/ 01/09/2020

Doc code: IDS
Doc description: Information Disclosure Statement (IDS) Field

PTO/SB/08a (01-10)
Approved for use through 07/31/2012. OMB 0651-0031
U.S. Patent and Trademark Office; U.S. DEPARTMENT OF COMMERCE
Under the Paperwork Reduction Act of 1995, no persons are required to respond to a collection of information unless it contains a valid OMB control number.

INFORMATION DISCLOSURE STATEMENT BY APPLICANT (Not for submission under 37 CFR 1.99)		
	Application Number	16/416,840
	Filing Date	May 20, 2019
	First Named Inventor	Kameshwar Durvasula
	Art Unit	2488
	Examiner Name	Allen C. Wong
	Attorney Docket Number	105650-1141487

	39	U.S. Patent Application No. 15/207,065, Notice of Allowance mailed on February 23, 2018, 9 pages.	
	40	U.S. Patent Application No. 15/973,983, Non-Final Office Action mailed on November 6, 2018, 7 pages.	
	41	U.S. Patent Application No. 15/973,983, Notice of Allowance mailed on March 4, 2019, 9 pages.	

EXAMINER SIGNATURE

Examiner Signature	/ALLEN C WONG/	Date Considered	01/09/2020

*EXAMINER: Initial if reference considered, whether or not citation is in conformance with MPEP 609. Draw line through a citation if not in conformance and not considered. Include copy of this form with next communication to applicant.

[1] See Kind Codes of USPTO Patent Documents at www.USPTO.GOV or MPEP 901.04. [2] Enter office that issued the document, by the two-letter code (WIPO Standard ST.3). [3] For Japanese patent documents, the indication of the year of the reign of the Emperor must precede the serial number of the patent document.
[4] Kind of document by the appropriate symbols as indicated on the document under WIPO Standard ST.16 if possible. [5] Applicant is to place a check mark here if English language translation is attached.

ALL REFERENCES CONSIDERED EXCEPT WHERE LINED THROUGH. /A.W./

UNITED STATES PATENT AND TRADEMARK OFFICE

UNITED STATES DEPARTMENT OF COMMERCE
United States Patent and Trademark Office
Address: COMMISSIONER FOR PATENTS
P.O. Box 1450
Alexandria, Virginia 22313-1450
www.uspto.gov

BIB DATA SHEET

CONFIRMATION NO. 5789

SERIAL NUMBER	FILING or 371(c) DATE	CLASS	GROUP ART UNIT	ATTORNEY DOCKET NO.
16/416,840	05/20/2019 **RULE**	348	2488	105650-1141487

APPLICANTS
AQUA PRODUCTS, INC., Cedar Grove, NJ;

INVENTORS
Kameshwar Durvasula, Garfield, NJ;
William Londono Correa, Bloomfield, NJ;

**** CONTINUING DATA ***************************
This application is a CON of 15/973,983 05/08/2018 PAT 10338599
which is a CON of 15/207,065 07/11/2016 PAT 9995051
which is a CON of 13/545,918 07/10/2012 PAT 9388595

**** FOREIGN APPLICATIONS ****************************

**** IF REQUIRED, FOREIGN FILING LICENSE GRANTED ****
05/28/2019

Foreign Priority claimed	❑ Yes ☑ No	❑ Met after Allowance	STATE OR COUNTRY	SHEETS DRAWINGS	TOTAL CLAIMS	INDEPENDENT CLAIMS
35 USC 119(a-d) conditions met	❑ Yes ❑ No		NJ	4	1	1
Verified and Acknowledged	/ALLEN C WONG/ Examiner's Signature	Initials				

ADDRESS
KILPATRICK TOWNSEND & STOCKTON LLP
MAILSTOP: IP DOCKETING - 22
1100 PEACHTREE STREET
SUITE 2800
ATLANTA, GA 30309
UNITED STATES

TITLE
POOL CLEANING SYSTEM AND METHOD TO AUTOMATICALLY CLEAN SURFACES OF A POOL USING IMAGES FROM A CAMERA

FILING FEE RECEIVED		
1720	FEES: Authority has been given in Paper No._____ to charge/credit DEPOSIT ACCOUNT No._____ for following:	❑ All Fees ❑ 1.16 Fees (Filing) ❑ 1.17 Fees (Processing Ext. of time) ❑ 1.18 Fees (Issue) ❑ Other _____ ❑ Credit

EAST Search History

EAST Search History (Prior Art)

Ref #	Hits	Search Query	DBs	Default Operator	Plurals	Time Stamp
L1	48	durvasula-kameshwar.in.	US-PGPUB; USPAT; USOCR; FPRS; EPO; JPO; DERWENT	OR	OFF	2020/01/09 19:00
S1	48	durvasula-kameshwar.in.	US-PGPUB; USPAT; USOCR; FPRS; EPO; JPO; DERWENT	OR	OFF	2020/01/09 11:00
S2	33	correa-william-londono.in.	US-PGPUB; USPAT; USOCR; FPRS; EPO; JPO; DERWENT	OR	OFF	2020/01/09 11:01
S3	80	(aqua adj products).as.	US-PGPUB; USPAT; USOCR; FPRS; EPO; JPO; DERWENT	OR	OFF	2020/01/09 11:01
S4	11008	G05D1/0246.cpc.	US-PGPUB; USPAT; USOCR; FPRS; EPO; JPO; DERWENT	OR	OFF	2020/01/09 11:05
S5	4066	G05D1/0016.cpc.	US-PGPUB; USPAT; USOCR; FPRS; EPO; JPO; DERWENT	OR	OFF	2020/01/09 11:05
S6	1765	G05D1/0033.cpc.	US-PGPUB; USPAT; USOCR; FPRS; EPO; JPO; DERWENT	OR	OFF	2020/01/09 11:05
S7	3222	G05D1/0038.cpc.	US-	OR	OFF	2020/01/09

			PGPUB; USPAT; USOCR; FPRS; EPO; JPO; DERWENT			11:05
S8	3378	G05D1/0206.cpc.	US-PGPUB; USPAT; USOCR; FPRS; EPO; JPO; DERWENT	OR	OFF	2020/01/09 11:05
S9	1049	G05D1/0253.cpc.	US-PGPUB; USPAT; USOCR; FPRS; EPO; JPO; DERWENT	OR	OFF	2020/01/09 11:05
S10	6090	G05D2201/0203.cpc.	US-PGPUB; USPAT; USOCR; FPRS; EPO; JPO; DERWENT	OR	OFF	2020/01/09 11:06
S11	11493	H04N5/23203.cpc.	US-PGPUB; USPAT; USOCR; FPRS; EPO; JPO; DERWENT	OR	OFF	2020/01/09 11:06
S12	31744	H04N7/18.cpc.	US-PGPUB; USPAT; USOCR; FPRS; EPO; JPO; DERWENT	OR	OFF	2020/01/09 11:06
S13	12150	H04N2005/2255.cpc.	US-PGPUB; USPAT; USOCR; FPRS; EPO; JPO; DERWENT	OR	OFF	2020/01/09 11:07
S14	3878	E04H4/1654.cpc.	US-PGPUB; USPAT; USOCR; FPRS; EPO; JPO; DERWENT	OR	OFF	2020/01/09 11:07
S15	15614	G06T7/90.cpc.	US-PGPUB; USPAT; USOCR; FPRS; EPO; JPO;	OR	OFF	2020/01/09 11:08

			DERWENT			
S16	13415	G06T7/001.cpc.	US-PGPUB; USPAT; USOCR; FPRS; EPO; JPO; DERWENT	OR	OFF	2020/01/09 11:08
S17	30819	G06T2207/10024.cpc.	US-PGPUB; USPAT; USOCR; FPRS; EPO; JPO; DERWENT	OR	OFF	2020/01/09 11:08
S18	4342	B08B9/08.cpc.	US-PGPUB; USPAT; USOCR; FPRS; EPO; JPO; DERWENT	OR	OFF	2020/01/09 11:08
S19	604	B08B9/46.cpc.	US-PGPUB; USPAT; USOCR; FPRS; EPO; JPO; DERWENT	OR	OFF	2020/01/09 11:08
S20	230	348/114.ccls.	US-PGPUB; USPAT; USOCR; FPRS; EPO; JPO; DERWENT	OR	OFF	2020/01/09 11:09
S21	14	pool near2 clean$3 with camera$1 with motor$3	US-PGPUB; USPAT; USOCR; FPRS; EPO; JPO; DERWENT	OR	OFF	2020/01/09 11:09
S22	106	pool near2 clean$3 with camera$1	US-PGPUB; USPAT; USOCR; FPRS; EPO; JPO; DERWENT	OR	OFF	2020/01/09 11:09
S23	141	pool near2 clean$3 same camera$1	US-PGPUB; USPAT; USOCR; FPRS; EPO; JPO; DERWENT	OR	OFF	2020/01/09 11:10
S24	2409	pool near2 clean$3 with (processor$1 or control$4)	US-PGPUB; USPAT; USOCR;	OR	OFF	2020/01/09 11:10

			FPRS; EPO; JPO; DERWENT			
S25	25	S24 and S1	US-PGPUB; USPAT; USOCR; FPRS; EPO; JPO; DERWENT	OR	OFF	2020/01/09 11:10
S26	14	S24 and S2	US-PGPUB; USPAT; USOCR; FPRS; EPO; JPO; DERWENT	OR	OFF	2020/01/09 11:10
S27	53	S24 and S3	US-PGPUB; USPAT; USOCR; FPRS; EPO; JPO; DERWENT	OR	OFF	2020/01/09 11:10
S28	16	S24 and S4	US-PGPUB; USPAT; USOCR; FPRS; EPO; JPO; DERWENT	OR	OFF	2020/01/09 11:10
S29	22	S24 and S5	US-PGPUB; USPAT; USOCR; FPRS; EPO; JPO; DERWENT	OR	OFF	2020/01/09 11:10
S30	16	S24 and S6	US-PGPUB; USPAT; USOCR; FPRS; EPO; JPO; DERWENT	OR	OFF	2020/01/09 11:11
S31	17	S24 and S7	US-PGPUB; USPAT; USOCR; FPRS; EPO; JPO; DERWENT	OR	OFF	2020/01/09 11:11
S32	20	S24 and S8	US-PGPUB; USPAT; USOCR; FPRS; EPO; JPO; DERWENT	OR	OFF	2020/01/09 11:11
S33	0	S24 and S9	US-PGPUB;	OR	OFF	2020/01/09 11:11

			USPAT; USOCR; FPRS; EPO; JPO; DERWENT			
S34	63	S24 and S10	US-PGPUB; USPAT; USOCR; FPRS; EPO; JPO; DERWENT	OR	OFF	2020/01/09 11:11
S35	14	S24 and S11	US-PGPUB; USPAT; USOCR; FPRS; EPO; JPO; DERWENT	OR	OFF	2020/01/09 11:11
S36	15	S24 and S12	US-PGPUB; USPAT; USOCR; FPRS; EPO; JPO; DERWENT	OR	OFF	2020/01/09 11:11
S37	13	S24 and S13	US-PGPUB; USPAT; USOCR; FPRS; EPO; JPO; DERWENT	OR	OFF	2020/01/09 11:11
S38	707	S24 and S14	US-PGPUB; USPAT; USOCR; FPRS; EPO; JPO; DERWENT	OR	OFF	2020/01/09 11:11
S39	14	S24 and S15	US-PGPUB; USPAT; USOCR; FPRS; EPO; JPO; DERWENT	OR	OFF	2020/01/09 11:11
S40	13	S24 and S16	US-PGPUB; USPAT; USOCR; FPRS; EPO; JPO; DERWENT	OR	OFF	2020/01/09 11:11
S41	13	S24 and S17	US-PGPUB; USPAT; USOCR; FPRS; EPO; JPO; DERWENT	OR	OFF	2020/01/09 11:11

S42	14	S24 and S18	US-PGPUB; USPAT; USOCR; FPRS; EPO; JPO; DERWENT	OR	OFF	2020/01/09 11:11
S43	0	S24 and S19	US-PGPUB; USPAT; USOCR; FPRS; EPO; JPO; DERWENT	OR	OFF	2020/01/09 11:11
S44	3	S24 and S20	US-PGPUB; USPAT; USOCR; FPRS; EPO; JPO; DERWENT	OR	OFF	2020/01/09 11:11
S45	2	"20130152970".pn.	US-PGPUB; USPAT; USOCR; FPRS; EPO; JPO; DERWENT	OR	OFF	2020/01/09 11:11
S46	76	("5205174" "5435031" "5507058" "5613261" "5886630" "7123746" "7362351" "7398138" "7993600" "8007653" "8043070" "9388595" "9995051" "10338599" "20020097322" "20040025268" "20040040581" "20070094817" "20100299016" "20110091329" "20110290707" "20110301752" "20130151061" "20130269097" "20140009748").pn.	US-PGPUB; USPAT; USOCR; FPRS; EPO; JPO; DERWENT	OR	OFF	2020/01/09 11:16
S47	19	pool near2 clean$3 same camera$1 same (control$4 or processor$1) same filter$3	US-PGPUB; USPAT; USOCR; FPRS; EPO; JPO; DERWENT	OR	OFF	2020/01/09 13:10
S48	30	pool near4 clean$3 with camera with (processor or controller or CPU)	US-PGPUB; USPAT; USOCR; FPRS; EPO; JPO; DERWENT	OR	OFF	2020/01/09 15:27
S49	793	pool near4 clean$3 with (processor or controller or CPU)	US-PGPUB; USPAT; USOCR; FPRS; EPO; JPO; DERWENT	OR	OFF	2020/01/09 15:27
S50	57	pool near4 clean$3 same camera same (processor or controller or CPU)	US-PGPUB;	OR	OFF	2020/01/09 15:28

			USPAT; USOCR; FPRS; EPO; JPO; DERWENT			
S51	176	pool near4 clean$3 and camera same (processor or controller or CPU)	US-PGPUB; USPAT; USOCR; FPRS; EPO; JPO; DERWENT	OR	OFF	2020/01/09 15:28
S52	19	pool near4 clean$3 and camera same (processor or controller or CPU) with motor	US-PGPUB; USPAT; USOCR; FPRS; EPO; JPO; DERWENT	OR	OFF	2020/01/09 15:28
S53	29	pool near4 clean$3 and camera same (processor or controller or CPU) same motor	US-PGPUB; USPAT; USOCR; FPRS; EPO; JPO; DERWENT	OR	OFF	2020/01/09 15:28
S54	2	(reclean$3 or re-clean$3) near8 pool$1 with motor	US-PGPUB; USPAT; USOCR; FPRS; EPO; JPO; DERWENT	OR	OFF	2020/01/09 15:28
S55	2	(reclean$3 or re-clean$3) near8 pool$1 same motor	US-PGPUB; USPAT; USOCR; FPRS; EPO; JPO; DERWENT	OR	OFF	2020/01/09 15:28
S56	8	(reclean$3 or re-clean$3) near8 pool$1 same (processor$1 or controller or CPU)	US-PGPUB; USPAT; USOCR; FPRS; EPO; JPO; DERWENT	OR	OFF	2020/01/09 15:28
S57	8	(reclean$3 or re-clean$3) near8 pool$1 with (processor$1 or controller or CPU)	US-PGPUB; USPAT; USOCR; FPRS; EPO; JPO; DERWENT	OR	OFF	2020/01/09 15:29
S58	85	pool near4 clean$3 and camera same (processor or controller or CPU) same (display$3 or monitor$$4)	US-PGPUB; USPAT; USOCR; FPRS; EPO; JPO; DERWENT	OR	OFF	2020/01/09 15:34

S59	7	pool near4 clean$3 with cleanliness near2 (threshold$1 or value$1)	US-PGPUB; USPAT; USOCR; FPRS; EPO; JPO; DERWENT	OR	OFF	2020/01/09 15:34
S60	19	pool near4 clean$3 with (clean or cleanness or neatness or cleanliness) near2 (threshold$1 or value$1)	US-PGPUB; USPAT; USOCR; FPRS; EPO; JPO; DERWENT	OR	OFF	2020/01/09 15:35
S61	22	pool near4 clean$3 same (clean or cleanness or neatness or cleanliness) near2 (threshold$1 or value$1)	US-PGPUB; USPAT; USOCR; FPRS; EPO; JPO; DERWENT	OR	OFF	2020/01/09 15:35
S62	51	pool near4 clean$3 and (clean or cleanness or neatness or cleanliness) near2 (threshold$1 or value$1)	US-PGPUB; USPAT; USOCR; FPRS; EPO; JPO; DERWENT	OR	OFF	2020/01/09 15:35
S63	90	pool near4 clean$3 with (clean or cleanness or neatness or cleanliness) near4 (characteristic$1 or threshold$1 or value$1 or number$1)	US-PGPUB; USPAT; USOCR; FPRS; EPO; JPO; DERWENT	OR	OFF	2020/01/09 15:35
S64	103	pool near4 clean$3 same (clean or cleanness or neatness or cleanliness) near4 (characteristic$1 or threshold$1 or value$1 or number$1)	US-PGPUB; USPAT; USOCR; FPRS; EPO; JPO; DERWENT	OR	OFF	2020/01/09 15:35
S65	229	pool near4 clean$3 and (clean or cleanness or neatness or cleanliness) near4 (characteristic$1 or threshold$1 or value$1 or number$1)	US-PGPUB; USPAT; USOCR; FPRS; EPO; JPO; DERWENT	OR	OFF	2020/01/09 15:36
S66	140	pool with (clean or cleanness or neatness or cleanliness) near4 (characteristic$1 or threshold$1 or value$1 or number$1)	US-PGPUB; USPAT; USOCR; FPRS; EPO; JPO; DERWENT	OR	OFF	2020/01/09 15:36
S67	53	pool with (clean or cleanness or neatness or cleanliness) near4 (characteristic$1 or threshold$1 or value$1 or number$1) with water	US-PGPUB; USPAT; USOCR; FPRS;	OR	OFF	2020/01/09 15:36

			EPO; JPO; DERWENT			
S68	53	pool with (clean or cleanness or neatness or cleanliness) near4 (characteristic$1 or threshold$1 or value$1 or number$1) with (water or underwater)	US-PGPUB; USPAT; USOCR; FPRS; EPO; JPO; DERWENT	OR	OFF	2020/01/09 15:37
S69	40	(pool or water or underwater) near4 (image or picture) with compar$3 with threshold$1	US-PGPUB; USPAT; USOCR; FPRS; EPO; JPO; DERWENT	OR	OFF	2020/01/09 15:37

1/9/2020 7:10:17 PM
C:\Users\awong1\Documents\EAST\Workspaces\16416840_010920.wsp

IN THE UNITED STATES PATENT AND TRADEMARK OFFICE

In re Application of:	)	
	)	
K. Durvasula, *et al.*	)	Group Art Unit: 2488
	)	
Serial No.: 16/416,840	)	Examiner: A. Wong
	)	
Filed: May 20, 2019	)	Conf. No.: 5789
	)	
For: POOL CLEANING SYSTEM AND METHOD TO AUTOMATICALLY CLEAN SURFACES OF A POOL USING IMAGES FROM A CAMERA	)	

February 18, 2020
Attorney Docket No. 105650-1141487

Certificate of Electronic Filing
I hereby certify that this correspondence is being electronically filed with The United States Patent Office via EFS Web, on February 18, 2020.

/Susie Haugen/
Susie Haugen

Commissioner for Patents
P.O. Box 1450
Alexandria, Virginia 22313-1450

RESPONSE

Dear Sir:

This paper is submitted in response to the Office Action transmitted January 15, 2020 in connection the above-identified application.

Remarks

A. Introduction

Claim 20 is pending in this application. The Examiner initially rejected the claim as (1) anticipated by U.S. Patent Application Publication No. 2013/0152970 of Porat and (2) subject to the doctrine of non-statutory double patenting based on claim 1 of U.S. Patent No. 9,995,051 to Durvasula, *et al.* (the "Grandparent Patent") in view of the Porat application. Because ***the Porat application does not qualify as prior art under applicable U.S. law***, no *prima facie* basis exists for either of the Examiner's rejections. Applicant accordingly requests that both rejections be withdrawn.

B. Applicable Law

This application is the fourth in a series of applications ultimately claiming priority to U.S. Patent No. 9,388,595 (the "Great Grandparent Patent"), whose application was filed ***July 10, 2012***. All subsequent applications in the series are continuations of the Great Grandparent Patent and neither add subject matter to the original application nor claim any such added subject matter. Further, no rejection for lack of written description ever issued as to any claim of any of the Grandparent Patent, the Great Grandparent Patent, or U.S. Patent No. 10,338,599 (the "Parent Patent"). Consequently, claim 20 of this application is entitled to an effective filing date of July 10, 2012, a date prior to implementation of the America Invents Act (the "AIA"). *See, e.g.*, M.P.E.P. § 2159. Hence, examination of claim 20 is governed by *pre-AIA* 35 U.S.C. § 102, contrary to the Examiner's contention on page 2 of the Office Action.

The Porat application was filed in the United States on December 19, 2012 and published June 20, 2013, both of which dates are ***after*** the effective filing date of the present

application. Although the Porat application claims priority to Israeli Patent Application No. 217093, such application appears not to have been published until June 2013 and not to have been patented until June 2015. No evidence thus exists that the invention of the Porat application was known or used in the United States prior to, *e.g.*, July 10, 2012, the latest possible date of invention for pending claim 20. *See pre-AIA* 35 U.S.C. § 102(a). As neither the Porat application nor its Israeli parent was published or patented prior to July 10, 2012, neither application qualifies as prior art under *pre-AIA* 35 U.S.C. §§ 102(a) or 102(b). And finally, because the actual U.S. filing date of the Porat application post-dates July 10, 2012, the Porat application fails to constitute prior art under *pre-AIA* 35 U.S.C. § 102(e). No legal rationale thus exists for citing the Porat application against this application, and Applicant accordingly requests that claim 20 be allowed.

Respectfully submitted,

Dean W. Russell
Reg. No. 33,452
Attorney for the Assignee

OF COUNSEL:

Kilpatrick Townsend & Stockton LLP
1100 Peachtree Street
Suite 2800
Atlanta, Georgia 30309
(404) 815-6528

Electronic Acknowledgement Receipt

EFS ID:	38612961
Application Number:	16416840
International Application Number:	
Confirmation Number:	5789
Title of Invention:	POOL CLEANING SYSTEM AND METHOD TO AUTOMATICALLY CLEAN SURFACES OF A POOL USING IMAGES FROM A CAMERA
First Named Inventor/Applicant Name:	Kameshwar Durvasula
Customer Number:	23370
Filer:	Dean W. Russell/Susie Haugen
Filer Authorized By:	Dean W. Russell
Attorney Docket Number:	105650-1141487
Receipt Date:	18-FEB-2020
Filing Date:	20-MAY-2019
Time Stamp:	13:40:35
Application Type:	Utility under 35 USC 111(a)

Payment information:

Submitted with Payment	no

File Listing:

Document Number	Document Description	File Name	File Size(Bytes)/ Message Digest	Multi Part /.zip	Pages (if appl.)
1		1141487_Response.pdf	100734 e71b44fd3da7afd7deb31ff53354aaec2061d0f5	yes	3

	Multipart Description/PDF files in .zip description		
	Document Description	**Start**	**End**
	Amendment/Req. Reconsideration-After Non-Final Reject	1	1
	Applicant Arguments/Remarks Made in an Amendment	2	3

Warnings:	
Information:	
Total Files Size (in bytes):	100734

This Acknowledgement Receipt evidences receipt on the noted date by the USPTO of the indicated documents, characterized by the applicant, and including page counts, where applicable. It serves as evidence of receipt similar to a Post Card, as described in MPEP 503.

New Applications Under 35 U.S.C. 111
If a new application is being filed and the application includes the necessary components for a filing date (see 37 CFR 1.53(b)-(d) and MPEP 506), a Filing Receipt (37 CFR 1.54) will be issued in due course and the date shown on this Acknowledgement Receipt will establish the filing date of the application.
National Stage of an International Application under 35 U.S.C. 371
If a timely submission to enter the national stage of an international application is compliant with the conditions of 35 U.S.C. 371 and other applicable requirements a Form PCT/DO/EO/903 indicating acceptance of the application as a national stage submission under 35 U.S.C. 371 will be issued in addition to the Filing Receipt, in due course.
New International Application Filed with the USPTO as a Receiving Office
If a new international application is being filed and the international application includes the necessary components for an international filing date (see PCT Article 11 and MPEP 1810), a Notification of the International Application Number and of the International Filing Date (Form PCT/RO/105) will be issued in due course, subject to prescriptions concerning national security, and the date shown on this Acknowledgement Receipt will establish the international filing date of the application.

PTO/SB/06 (09-11)
Approved for use through 1/31/2014. OMB 0651-0032
U.S. Patent and Trademark Office; U.S. DEPARTMENT OF COMMERCE
Under the Paperwork Reduction Act of 1995, no persons are required to respond to a collection of information unless it displays a valid OMB control number.

PATENT APPLICATION FEE DETERMINATION RECORD Substitute for Form PTO-875	Application or Docket Number 16/416,840	Filing Date 05/20/2019	☐ To be Mailed

ENTITY: ☑ LARGE ☐ SMALL ☐ MICRO

APPLICATION AS FILED - PART I

FOR	(Column 1) NUMBER FILED	(Column 2) NUMBER EXTRA		RATE ($)	FEE ($)
☐ BASIC FEE (37 CFR 1.16(a), (b), or (c))	N/A	N/A		N/A	
☐ SEARCH FEE (37 CFR 1.16(k), (i), or (m))	N/A	N/A		N/A	
☐ EXAMINATION FEE (37 CFR 1.16(o), (p), or (q))	N/A	N/A		N/A	
TOTAL CLAIMS (37 CFR 1.16(i))	minus 20 =	*		x $100 =	
INDEPENDENT CLAIMS (37 CFR 1.16(h))	minus 3 =	*		x $460 =	
☐ APPLICATION SIZE FEE (37 CFR 1.16(s))	If the specification and drawings exceed 100 sheets of paper, the application size fee due is $310 ($155 for small entity) for each additional 50 sheets or fraction thereof. See 35 U.S.C. 41(a)(1)(G) and 37 CFR 1.16(s).				
☐ MULTIPLE DEPENDENT CLAIM PRESENT (37 CFR 1.16(j))					
* If the difference in column 1 is less than zero, enter "0" in column 2.				TOTAL	

APPLICATION AS AMENDED - PART II

AMENDMENT	02/18/2020	(Column 1) CLAIMS REMAINING AFTER AMENDMENT		(Column 2) HIGHEST NUMBER PREVIOUSLY PAID FOR	(Column 3) PRESENT EXTRA		RATE ($)	ADDITIONAL FEE ($)
	Total (37 CFR 1.16(i))	*	Minus	**	=		x $100 =	
	Independent (37 CFR 1.16(h))	*	Minus	***	=		x $460 =	
	☐ Application Size Fee (37 CFR 1.16(s))							
	☐ FIRST PRESENTATION OF MULTIPLE DEPENDENT CLAIM (37 CFR 1.16(j))							
							TOTAL ADD'L FEE	

AMENDMENT		(Column 1) CLAIMS REMAINING AFTER AMENDMENT		(Column 2) HIGHEST NUMBER PREVIOUSLY PAID FOR	(Column 3) PRESENT EXTRA		RATE ($)	ADDITIONAL FEE ($)
	Total (37 CFR 1.16(i))	*	Minus	**	=		x $0 =	
	Independent (37 CFR 1.16(h))	*	Minus	***	=		x $0 =	
	☐ Application Size Fee (37 CFR 1.16(s))							
	☐ FIRST PRESENTATION OF MULTIPLE DEPENDENT CLAIM (37 CFR 1.16(j))							
							TOTAL ADD'L FEE	

* If the entry in column 1 is less than the entry in column 2, write "0" in column 3.	LIE
** If the "Highest Number Previously Paid For" IN THIS SPACE is less than 20, enter "20".	/VIOLA D ROGERS/
*** If the "Highest Number Previously Paid For" IN THIS SPACE is less than 3, enter "3".	
The "Highest Number Previously Paid For" (Total or Independent) is the highest number found in the appropriate box in column 1.	

This collection of information is required by 37 CFR 1.16. The information is required to obtain or retain a benefit by the public which is to file (and by the USPTO to process) an application. Confidentiality is governed by 35 U.S.C. 122 and 37 CFR 1.14. This collection is estimated to take 12 minutes to complete, including gathering, preparing, and submitting the completed application form to the USPTO. Time will vary depending upon the individual case. Any comments on the amount of time you require to complete this form and/or suggestions for reducing this burden, should be sent to the Chief Information Officer, U.S. Patent and Trademark Office, U.S. Department of Commerce, P.O. Box 1450, Alexandria, VA 22313-1450. DO NOT SEND FEES OR COMPLETED FORMS TO THIS ADDRESS. **SEND TO: Commissioner for Patents, P.O. Box 1450, Alexandria, VA 22313-1450.**

If you need assistance in completing the form, call 1-800-PTO-9199 and select option 2.

PTO/SB/06 (09-11)
Approved for use through 1/31/2014. OMB 0651-0032
U.S. Patent and Trademark Office; U.S. DEPARTMENT OF COMMERCE
Under the Paperwork Reduction Act of 1995, no persons are required to respond to a collection of information unless it displays a valid OMB control number.

PATENT APPLICATION FEE DETERMINATION RECORD Substitute for Form PTO-875	Application or Docket Number 16/416,840	Filing Date 05/20/2019	☐ To be Mailed

ENTITY: ☑ LARGE ☐ SMALL ☐ MICRO

APPLICATION AS FILED - PART I

FOR	(Column 1) NUMBER FILED	(Column 2) NUMBER EXTRA		RATE ($)	FEE ($)
☐ BASIC FEE (37 CFR 1.16(a), (b), or (c))	N/A	N/A		N/A	
☐ SEARCH FEE (37 CFR 1.16(k), (i), or (m))	N/A	N/A		N/A	
☐ EXAMINATION FEE (37 CFR 1.16(o), (p), or (q))	N/A	N/A		N/A	
TOTAL CLAIMS (37 CFR 1.16(i))	minus 20 =	*		x $100 =	
INDEPENDENT CLAIMS (37 CFR 1.16(h))	minus 3 =	*		x $460 =	
☐ APPLICATION SIZE FEE (37 CFR 1.16(s))	If the specification and drawings exceed 100 sheets of paper, the application size fee due is $310 ($155 for small entity) for each additional 50 sheets or fraction thereof. See 35 U.S.C. 41(a)(1)(G) and 37 CFR 1.16(s).				
☐ MULTIPLE DEPENDENT CLAIM PRESENT (37 CFR 1.16(j))					
* If the difference in column 1 is less than zero, enter "0" in column 2.				TOTAL	

APPLICATION AS AMENDED - PART II

AMENDMENT	02/18/2020	(Column 1) CLAIMS REMAINING AFTER AMENDMENT		(Column 2) HIGHEST NUMBER PREVIOUSLY PAID FOR	(Column 3) PRESENT EXTRA		RATE ($)	ADDITIONAL FEE ($)
	Total (37 CFR 1.16(i))	* 26	Minus	** 26	= 0		x $100 =	0
	Independent (37 CFR 1.16(h))	* 6	Minus	*** 6	= 0		x $460 =	0
	☐ Application Size Fee (37 CFR 1.16(s))							
	☐ FIRST PRESENTATION OF MULTIPLE DEPENDENT CLAIM (37 CFR 1.16(j))							
							TOTAL ADD'L FEE	0

AMENDMENT		(Column 1) CLAIMS REMAINING AFTER AMENDMENT		(Column 2) HIGHEST NUMBER PREVIOUSLY PAID FOR	(Column 3) PRESENT EXTRA		RATE ($)	ADDITIONAL FEE ($)
	Total (37 CFR 1.16(i))	*	Minus	**	=		x $0 =	
	Independent (37 CFR 1.16(h))	*	Minus	***	=		x $0 =	
	☐ Application Size Fee (37 CFR 1.16(s))							
	☐ FIRST PRESENTATION OF MULTIPLE DEPENDENT CLAIM (37 CFR 1.16(j))							
							TOTAL ADD'L FEE	

* If the entry in column 1 is less than the entry in column 2, write "0" in column 3.	LIE
** If the "Highest Number Previously Paid For" IN THIS SPACE is less than 20, enter "20".	/VIOLA D ROGERS/
*** If the "Highest Number Previously Paid For" IN THIS SPACE is less than 3, enter "3".	
The "Highest Number Previously Paid For" (Total or Independent) is the highest number found in the appropriate box in column 1.	

This collection of information is required by 37 CFR 1.16. The information is required to obtain or retain a benefit by the public which is to file (and by the USPTO to process) an application. Confidentiality is governed by 35 U.S.C. 122 and 37 CFR 1.14. This collection is estimated to take 12 minutes to complete, including gathering, preparing, and submitting the completed application form to the USPTO. Time will vary depending upon the individual case. Any comments on the amount of time you require to complete this form and/or suggestions for reducing this burden, should be sent to the Chief Information Officer, U.S. Patent and Trademark Office, U.S. Department of Commerce, P.O. Box 1450, Alexandria, VA 22313-1450. DO NOT SEND FEES OR COMPLETED FORMS TO THIS ADDRESS. **SEND TO: Commissioner for Patents, P.O. Box 1450, Alexandria, VA 22313-1450.**

If you need assistance in completing the form, call 1-800-PTO-9199 and select option 2.

UNITED STATES PATENT AND TRADEMARK OFFICE

UNITED STATES DEPARTMENT OF COMMERCE
United States Patent and Trademark Office
Address: COMMISSIONER FOR PATENTS
P.O. Box 1450
Alexandria, Virginia 22313-1450
www.uspto.gov

APPLICATION NO.	FILING DATE	FIRST NAMED INVENTOR	ATTORNEY DOCKET NO.	CONFIRMATION NO.
16/416,840	05/20/2019	Kameshwar Durvasula	105650-1141487	5789

23370 7590 02/28/2020
KILPATRICK TOWNSEND & STOCKTON LLP
MAILSTOP: IP DOCKETING - 22
1100 PEACHTREE STREET
SUITE 2800
ATLANTA, GA 30309

EXAMINER
WONG, ALLEN C

ART UNIT	PAPER NUMBER
2488	

NOTIFICATION DATE	DELIVERY MODE
02/28/2020	ELECTRONIC

Please find below and/or attached an Office communication concerning this application or proceeding.

The time period for reply, if any, is set in the attached communication.

Notice of the Office communication was sent electronically on above-indicated "Notification Date" to the following e-mail address(es):

KTSDocketing2@kilpatrick.foundationip.com
ipefiling@kilpatricktownsend.com

Office Action Summary	Application No. 16/416,840	Applicant(s) Durvasula et al.	
	Examiner ALLEN C WONG	Art Unit 2488	AIA (FITF) Status Yes

-- The MAILING DATE of this communication appears on the cover sheet with the correspondence address --

Period for Reply

A SHORTENED STATUTORY PERIOD FOR REPLY IS SET TO EXPIRE 3 MONTHS FROM THE MAILING DATE OF THIS COMMUNICATION.

- Extensions of time may be available under the provisions of 37 CFR 1.136(a). In no event, however, may a reply be timely filed after SIX (6) MONTHS from the mailing date of this communication.
- If NO period for reply is specified above, the maximum statutory period will apply and will expire SIX (6) MONTHS from the mailing date of this communication.
- Failure to reply within the set or extended period for reply will, by statute, cause the application to become ABANDONED (35 U.S.C. § 133). Any reply received by the Office later than three months after the mailing date of this communication, even if timely filed, may reduce any earned patent term adjustment. See 37 CFR 1.704(b).

Status

1)☑ Responsive to communication(s) filed on 2/18/20.

☐ A declaration(s)/affidavit(s) under **37 CFR 1.130(b)** was/were filed on _____.

2a)☐ This action is **FINAL.** 2b) ☑ This action is non-final.

3)☐ An election was made by the applicant in response to a restriction requirement set forth during the interview on _____; the restriction requirement and election have been incorporated into this action.

4)☐ Since this application is in condition for allowance except for formal matters, prosecution as to the merits is closed in accordance with the practice under *Ex parte Quayle*, 1935 C.D. 11, 453 O.G. 213.

Disposition of Claims*

5) ☑ Claim(s) 20 is/are pending in the application.

5a) Of the above claim(s) _____ is/are withdrawn from consideration.

6) ☐ Claim(s) _____ is/are allowed.

7) ☑ Claim(s) 20 is/are rejected.

8) ☐ Claim(s) _____ is/are objected to.

9) ☐ Claim(s) _____ are subject to restriction and/or election requirement

* If any claims have been determined allowable, you may be eligible to benefit from the **Patent Prosecution Highway** program at a participating intellectual property office for the corresponding application. For more information, please see http://www.uspto.gov/patents/init_events/pph/index.jsp or send an inquiry to **PPHfeedback@uspto.gov.**

Application Papers

10)☐ The specification is objected to by the Examiner.

11)☑ The drawing(s) filed on 5/20/19 is/are: a)☑ accepted or b)☐ objected to by the Examiner.

Applicant may not request that any objection to the drawing(s) be held in abeyance. See 37 CFR 1.85(a).

Replacement drawing sheet(s) including the correction is required if the drawing(s) is objected to. See 37 CFR 1.121(d).

Priority under 35 U.S.C. § 119

12)☐ Acknowledgment is made of a claim for foreign priority under 35 U.S.C. § 119(a)-(d) or (f).

Certified copies:

a)☐ All b)☐ Some** c)☐ None of the:

1.☐ Certified copies of the priority documents have been received.

2.☐ Certified copies of the priority documents have been received in Application No. _____.

3.☐ Copies of the certified copies of the priority documents have been received in this National Stage application from the International Bureau (PCT Rule 17.2(a)).

** See the attached detailed Office action for a list of the certified copies not received.

Attachment(s)

1) ☑ Notice of References Cited (PTO-892)

2) ☐ Information Disclosure Statement(s) (PTO/SB/08a and/or PTO/SB/08b) Paper No(s)/Mail Date _____.

3) ☐ Interview Summary (PTO-413) Paper No(s)/Mail Date _____.

4) ☐ Other: _____.

WYBOTICS EX1009
Wybotics v. Zodiac
Page 121

DETAILED ACTION

Notice of Pre-AIA or AIA Status

The present application is being examined under the pre-AIA first to invent provisions.

Response to Arguments

Applicant's arguments, see pages 1-2, filed 2/18/20, with respect to claim 20 have been fully read and considered and are persuasive. The 35 USC 102(a)(2) rejection of claim 20 has been withdrawn. However, the double patenting rejection to claim 20 is now rejected on the ground of non-statutory double patenting as being unpatentable over claim 1 of US Patent Number 9,995,051 in view of Hui (US 2011/0049023). The Hui reference has a US pre-grant publication date of March 3, 2011, which is before the US filing date of July 10, 2012 of US Application Number 13/545,918, now US Patent Number 9,388,595. A terminal disclaimer is required to overcome the double patenting rejection.

Double Patenting

The nonstatutory double patenting rejection is based on a judicially created doctrine grounded in public policy (a policy reflected in the statute) so as to prevent the unjustified or improper timewise extension of the "right to exclude" granted by a patent and to prevent possible harassment by multiple assignees. A nonstatutory double patenting rejection is appropriate where the conflicting claims are not identical, but at least one examined application claim is not patentably distinct from the reference claim(s) because the examined application claim is either anticipated by, or would have been obvious over, the reference claim(s). See, e.g., *In re Berg*, 140 F.3d 1428, 46 USPQ2d 1226 (Fed. Cir. 1998); *In re Goodman*, 11 F.3d 1046, 29 USPQ2d 2010 (Fed. Cir. 1993); *In re Longi*, 759 F.2d 887, 225 USPQ 645 (Fed. Cir. 1985); *In re Van Ornum*, 686 F.2d 937, 214 USPQ 761 (CCPA 1982); *In re Vogel*, 422 F.2d 438, 164 USPQ 619 (CCPA 1970); *In re Thorington*, 418 F.2d 528, 163 USPQ 644 (CCPA 1969).

A timely filed terminal disclaimer in compliance with 37 CFR 1.321(c) or 1.321(d) may be used to overcome an actual or provisional rejection based on nonstatutory double patenting provided the reference application or patent either is shown to be commonly owned with the examined application, or claims an invention made as a result of activities undertaken within the scope of a joint research agreement. See MPEP § 717.02 for applications subject to examination under the first inventor to file provisions of the AIA as explained in MPEP § 2159. See MPEP §§ 706.02(l)(1) - 706.02(l)(3) for

applications not subject to examination under the first inventor to file provisions of the AIA. A terminal disclaimer must be signed in compliance with 37 CFR 1.321(b).

The USPTO Internet website contains terminal disclaimer forms which may be used. Please visit www.uspto.gov/patent/patents-forms. The filing date of the application in which the form is filed determines what form (e.g., PTO/SB/25, PTO/SB/26, PTO/AIA/25, or PTO/AIA/26) should be used. A web-based eTerminal Disclaimer may be filled out completely online using web-screens. An eTerminal Disclaimer that meets all requirements is auto-processed and approved immediately upon submission. For more information about eTerminal Disclaimers, refer to www.uspto.gov/patents/process/file/efs/guidance/eTD-info-I.jsp.

Claim 20 is rejected on the ground of nonstatutory double patenting as being unpatentable over claim 1 of U.S. Patent No. 9,995,051 in view of Hui (US 2011/0049023).

Claim 1 of Patent '051 discloses:

"A pool cleaning system for cleaning debris from a submerged surface of a swimming pool comprising:

a self-propelled pool cleaner having rotatably-mounted supports for supporting and guiding the cleaner on the pool surface;

a filter configured to retain the debris collected from the submerged surface of the swimming pool;

an electric motor for enabling the rotation of the rotatably-mounted supports on the pool surface; at least one camera to capture imagery of the pool surface;

a controller, in electronic communication with the at least one camera, to determine a cleanliness characteristic of the pool surface on which the cleaner has passed based on the camera imagery and generate a control signal to direct movement of the cleaner based on the cleanliness characteristic of the pool surface, wherein the control signal directs movement of the cleaner to reclean a portion of the pool surface where the cleanliness characteristic fails to satisfy a predefined threshold".

Claim 20 of present Application '840 discloses:

"A self-propelled pool cleaner for cleaning debris from a submerged surface of a swimming pool, comprising:

a vehicle body;

means for moving the vehicle body within the swimming pool;

a filter configured to retain debris collected from the submerged surface;

at least one camera positioned on or in the body for capturing an image of at least a first portion of the submerged surface; and

a controller (i) positioned on or in the body, (ii) in electronic communication with the at least one camera, and (iii) configured to generate at least one control signal to cause movement of the body within the swimming pool to the first portion of the submerged surface when the captured image fails to satisfy a pre-defined threshold".

Although both claim 1 of Patent '051 and claim 20 of present Application '840 disclose "self-propelled pool cleaner…", and claim 1 of Patent '051 discloses "a self-propelled pool cleaner having rotatably-mounted supports… electrical motor for enabling the rotation of the rotatably-mounted supports on the pool surface", and similarly, claim 20 of Application '840 discloses "means for moving the body within the swimming pool…" Claim 1 of Patent '051 discloses "a filter configured to retain the debris…", and similarly, claim 20 of Application '840 discloses "a filter configured to retain debris…" Claim 1 of Patent '051 discloses "at least one camera to capture imagery of the pool surface…", and similarly, claim 20 of Application '840 discloses "at least one camera… capturing an image…" Claim 1 of Patent '051 discloses "a controller, in electronic communication with the at least one camera… generate a control signal to direct movement… where the cleanliness characteristic fails to satisfy a predefined threshold", and similarly, claim 20 of Application '840 discloses "a controller… electronic communication with the at least one camera… generate at least one control signal to cause movement… when the captured image fails to satisfy a pre-defined threshold".

Claim 1 of Patent '051 does not disclose a vehicle body, however, Hui teaches implementing a vehicle body (paragraph [51], Hui discloses pool cleaning vehicle 100 includes a housing 120 having a body shell 122 and a frame). Therefore, it would have been obvious to one of ordinary skill in the art to combine the teachings of claim 1 of Patent '051 and Hui together as a whole for permitting the housing of parts with a vehicle body in order to appropriately protect the internal parts of the pool cleaner from damage so as to ensure functional, proper operation of the pool cleaner.

Contact Information

Any inquiry concerning this communication or earlier communications from the examiner should be directed to ALLEN C WONG whose telephone number is (571)272-7341. The examiner can normally be reached on Flex Monday-Thursday 9:30am-7:30pm.

Examiner interviews are available via telephone, in-person, and video conferencing using a USPTO supplied web-based collaboration tool. To schedule an interview, applicant is encouraged to use the USPTO Automated Interview Request (AIR) at http://www.uspto.gov/interviewpractice.

If attempts to reach the examiner by telephone are unsuccessful, the examiner's supervisor, Sath V Perungavoor can be reached on 571-272-7455. The fax phone number for the organization where this application or proceeding is assigned is 571-273-8300.

Information regarding the status of an application may be obtained from the Patent Application Information Retrieval (PAIR) system. Status information for published applications may be obtained from either Private PAIR or Public PAIR. Status information for unpublished applications is available through Private PAIR only. For more information about the PAIR system, see http://pair-direct.uspto.gov. Should you have questions on access to the Private PAIR system, contact the Electronic Business Center (EBC) at 866-217-9197 (toll-free). If you would like assistance from a USPTO Customer Service Representative or access to the automated information system, call 800-786-9199 (IN USA OR CANADA) or 571-272-1000.

/ALLEN C WONG/
Primary Examiner, Art Unit 2488

Notice of References Cited	Application/Control No. 16/416,840	Applicant(s)/Patent Under Reexamination Durvasula et al.	
	Examiner ALLEN C WONG	Art Unit 2488	Page 1 of 1

U.S. PATENT DOCUMENTS

*		Document Number Country Code-Number-Kind Code	Date MM-YYYY	Name	CPC Classification	US Classification
*	A	US-20110049023-A1	03-2011	HUI; Wing-kin	E04H4/1654	210/91
	B					
	C					
	D					
	E					
	F					
	G					
	H					
	I					
	J					
	K					
	L					
	M					

FOREIGN PATENT DOCUMENTS

*		Document Number Country Code-Number-Kind Code	Date MM-YYYY	Country	Name	CPC Classification
	N					
	O					
	P					
	Q					
	R					
	S					
	T					

NON-PATENT DOCUMENTS

*		Include as applicable: Author, Title Date, Publisher, Edition or Volume, Pertinent Pages)
	U	
	V	
	W	
	X	

*A copy of this reference is not being furnished with this Office action. (See MPEP § 707.05(a).)
Dates in MM-YYYY format are publication dates. Classifications may be US or foreign.

Search Notes	Application/Control No.	Applicant(s)/Patent Under Reexamination
	16/416,840	Durvasula et al.
	Examiner	**Art Unit**
	ALLEN C WONG	2488

CPC - Searched*		
Symbol	**Date**	**Examiner**
G05D 1/0246, 0016, 0033, 0038, 0206, 0253; G05D 2201/0203; H04N 5/23203; H04N 7/18; H04N 2005/2255; E04H 4/1654; G06T 7/90, 001; G06T 2207/10024; B08B 9/08, 46	01/09/2020	AW
search updated	02/25/2020	AW

CPC Combination Sets - Searched*		
Symbol	**Date**	**Examiner**

US Classification - Searched*			
Class	**Subclass**	**Date**	**Examiner**
348	114	01/09/2020	AW
search	updated	02/25/2020	AW

* See search history printout included with this form or the SEARCH NOTES box below to determine the scope of the search.

Search Notes		
Search Notes	**Date**	**Examiner**
refs checked (US Patent Nos.9388595, 9995051, 10338599)	01/09/2020	AW
Inventor Names search	01/09/2020	AW
NPL search (eg. Google Scholar)	01/09/2020	AW
EAST text search	01/09/2020	AW
G05D 1/0246, 0016, 0033, 0038, 0206, 0253; G05D 2201/0203; H04N 5/23203; H04N 7/18; H04N 2005/2255; E04H 4/1654; G06T 7/90, 001; G06T 2207/10024; B08B 9/08, 46 (see search history printout)	01/09/2020	AW

/ALLEN C WONG/ Primary Examiner, Art Unit 2488	

WYBOTICS EX1009
Wybotics v. Zodiac
Page 127

Search Notes	Application/Control No.	Applicant(s)/Patent Under Reexamination
	16/416,840	Durvasula et al.
	Examiner	**Art Unit**
	ALLEN C WONG	2488

Interference Search			
US Class/CPC Symbol	**US Subclass/CPC Group**	**Date**	**Examiner**

/ALLEN C WONG/ Primary Examiner, Art Unit 2488	

WYBOTICS EX1009
Wybotics v. Zodiac
Page 128

Index of Claims	Application/Control No.	Applicant(s)/Patent Under Reexamination
	16/416,840	Durvasula et al.
	Examiner	**Art Unit**
	ALLEN C WONG	2488

✓	Rejected	-	Cancelled	N	Non-Elected	A	Appeal
=	Allowed	÷	Restricted	I	Interference	O	Objected

CLAIMS

☐ Claims renumbered in the same order as presented by applicant ☐ CPA ☐ T.D. ☐ R.1.47

CLAIM		DATE								
Final	Original	01/09/2020	02/25/2020							
	1	-	-							
	2	-	-							
	3	-	-							
	4	-	-							
	5	-	-							
	6	-	-							
	7	-	-							
	8	-	-							
	9	-	-							
	10	-	-							
	11	-	-							
	12	-	-							
	13	-	-							
	14	-	-							
	15	-	-							
	16	-	-							
	17	-	-							
	18	-	-							
	19	-	-							
	20	✓	✓							

WYBOTICS EX1009
Wybotics v. Zodiac
Page 129

EAST Search History

EAST Search History (Prior Art)

Ref #	Hits	Search Query	DBs	Default Operator	Plurals	Time Stamp
L1	20	pool near2 clean$3 same camera$1 same (control$4 or processor$1) same filter$3	US-PGPUB; USPAT; USOCR; FPRS; EPO; JPO; DERWENT	OR	OFF	2020/02/25 11:28
L2	30	pool near4 clean$3 with camera with (processor or controller or CPU)	US-PGPUB; USPAT; USOCR; FPRS; EPO; JPO; DERWENT	OR	OFF	2020/02/25 11:28
L3	20	pool near4 clean$3 and camera same (processor or controller or CPU) with motor	US-PGPUB; USPAT; USOCR; FPRS; EPO; JPO; DERWENT	OR	OFF	2020/02/25 11:28
L4	30	pool near4 clean$3 and camera same (processor or controller or CPU) same motor	US-PGPUB; USPAT; USOCR; FPRS; EPO; JPO; DERWENT	OR	OFF	2020/02/25 11:28
L5	2	(reclean$3 or re-clean$3) near8 pool$1 with motor	US-PGPUB; USPAT; USOCR; FPRS; EPO; JPO; DERWENT	OR	OFF	2020/02/25 11:29
L6	2	(reclean$3 or re-clean$3) near8 pool$1 same motor	US-PGPUB; USPAT; USOCR; FPRS; EPO; JPO; DERWENT	OR	OFF	2020/02/25 11:29
L7	8	(reclean$3 or re-clean$3) near8 pool$1 same (processor$1 or controller or CPU)	US-PGPUB; USPAT; USOCR; FPRS; EPO; JPO; DERWENT	OR	OFF	2020/02/25 11:29
L8	8	(reclean$3 or re-clean$3) near8 pool$1	US-	OR	OFF	2020/02/25

		with (processor$1 or controller or CPU)	PGPUB; USPAT; USOCR; FPRS; EPO; JPO; DERWENT			11:30
L9	91	pool near4 clean$3 and camera same (processor or controller or CPU) same (display$3 or monitor$$4)	US-PGPUB; USPAT; USOCR; FPRS; EPO; JPO; DERWENT	OR	OFF	2020/02/25 11:30
L10	7	pool near4 clean$3 with cleanliness near2 (threshold$1 or value$1)	US-PGPUB; USPAT; USOCR; FPRS; EPO; JPO; DERWENT	OR	OFF	2020/02/25 11:30
L11	20	pool near4 clean$3 with (clean or cleanness or neatness or cleanliness) near2 (threshold$1 or value$1)	US-PGPUB; USPAT; USOCR; FPRS; EPO; JPO; DERWENT	OR	OFF	2020/02/25 11:37
L12	231	pool near4 clean$3 and (clean or cleanness or neatness or cleanliness) near4 (characteristic$1 or threshold$1 or value$1 or number$1)	US-PGPUB; USPAT; USOCR; FPRS; EPO; JPO; DERWENT	OR	OFF	2020/02/25 11:37
L13	49	durvasula-kameshwar.in.	US-PGPUB; USPAT; USOCR; FPRS; EPO; JPO; DERWENT	OR	OFF	2020/02/25 11:38
L14	10	12 and L13	US-PGPUB; USPAT; USOCR; FPRS; EPO; JPO; DERWENT	OR	OFF	2020/02/25 11:38
L15	33	correa-william-londono.in.	US-PGPUB; USPAT; USOCR; FPRS; EPO; JPO; DERWENT	OR	OFF	2020/02/25 11:38
L16	8	12 and L15	US-PGPUB; USPAT; USOCR; FPRS; EPO; JPO;	OR	OFF	2020/02/25 11:38

			DERWENT			
L17	83	(aqua adj products).as.	US-PGPUB; USPAT; USOCR; FPRS; EPO; JPO; DERWENT	OR	OFF	2020/02/25 11:38
L18	5	12 and L17	US-PGPUB; USPAT; USOCR; FPRS; EPO; JPO; DERWENT	OR	OFF	2020/02/25 11:38
L19	11404	G05D1/0246.cpc.	US-PGPUB; USPAT; USOCR; FPRS; EPO; JPO; DERWENT	OR	OFF	2020/02/25 11:38
L20	12	12 and L19	US-PGPUB; USPAT; USOCR; FPRS; EPO; JPO; DERWENT	OR	OFF	2020/02/25 11:38
L21	4213	G05D1/0016.cpc.	US-PGPUB; USPAT; USOCR; FPRS; EPO; JPO; DERWENT	OR	OFF	2020/02/25 11:38
L22	12	12 and L21	US-PGPUB; USPAT; USOCR; FPRS; EPO; JPO; DERWENT	OR	OFF	2020/02/25 11:38
L23	1819	G05D1/0033.cpc.	US-PGPUB; USPAT; USOCR; FPRS; EPO; JPO; DERWENT	OR	OFF	2020/02/25 11:38
L24	12	12 and L23	US-PGPUB; USPAT; USOCR; FPRS; EPO; JPO; DERWENT	OR	OFF	2020/02/25 11:38
L25	3356	G05D1/0038.cpc.	US-PGPUB; USPAT; USOCR;	OR	OFF	2020/02/25 11:38

			FPRS; EPO; JPO; DERWENT			
L26	12	12 and L25	US-PGPUB; USPAT; USOCR; FPRS; EPO; JPO; DERWENT	OR	OFF	2020/02/25 11:38
L27	3476	G05D1/0206.cpc.	US-PGPUB; USPAT; USOCR; FPRS; EPO; JPO; DERWENT	OR	OFF	2020/02/25 11:38
L28	0	12 and L27	US-PGPUB; USPAT; USOCR; FPRS; EPO; JPO; DERWENT	OR	OFF	2020/02/25 11:38
L29	1076	G05D1/0253.cpc.	US-PGPUB; USPAT; USOCR; FPRS; EPO; JPO; DERWENT	OR	OFF	2020/02/25 11:38
L30	0	12 and L29	US-PGPUB; USPAT; USOCR; FPRS; EPO; JPO; DERWENT	OR	OFF	2020/02/25 11:38
L31	6288	G05D2201/0203.cpc.	US-PGPUB; USPAT; USOCR; FPRS; EPO; JPO; DERWENT	OR	OFF	2020/02/25 11:38
L32	12	12 and L31	US-PGPUB; USPAT; USOCR; FPRS; EPO; JPO; DERWENT	OR	OFF	2020/02/25 11:38
L33	11774	H04N5/23203.cpc.	US-PGPUB; USPAT; USOCR; FPRS; EPO; JPO; DERWENT	OR	OFF	2020/02/25 11:38
L34	12	12 and L33	US-PGPUB;	OR	OFF	2020/02/25 11:38

			USPAT; USOCR; FPRS; EPO; JPO; DERWENT			
L35	32723	H04N7/18.cpc.	US-PGPUB; USPAT; USOCR; FPRS; EPO; JPO; DERWENT	OR	OFF	2020/02/25 11:38
L36	12	12 and L35	US-PGPUB; USPAT; USOCR; FPRS; EPO; JPO; DERWENT	OR	OFF	2020/02/25 11:38
L37	12466	H04N2005/2255.cpc.	US-PGPUB; USPAT; USOCR; FPRS; EPO; JPO; DERWENT	OR	OFF	2020/02/25 11:38
L38	12	12 and L37	US-PGPUB; USPAT; USOCR; FPRS; EPO; JPO; DERWENT	OR	OFF	2020/02/25 11:38
L39	3947	E04H4/1654.cpc.	US-PGPUB; USPAT; USOCR; FPRS; EPO; JPO; DERWENT	OR	OFF	2020/02/25 11:38
L40	16	12 and L39	US-PGPUB; USPAT; USOCR; FPRS; EPO; JPO; DERWENT	OR	OFF	2020/02/25 11:38
L41	16120	G06T7/90.cpc.	US-PGPUB; USPAT; USOCR; FPRS; EPO; JPO; DERWENT	OR	OFF	2020/02/25 11:38
L42	12	12 and L41	US-PGPUB; USPAT; USOCR; FPRS; EPO; JPO; DERWENT	OR	OFF	2020/02/25 11:38

L43	13847	G06T7/001.cpc.	US-PGPUB; USPAT; USOCR; FPRS; EPO; JPO; DERWENT	OR	OFF	2020/02/25 11:38
L44	12	12 and L43	US-PGPUB; USPAT; USOCR; FPRS; EPO; JPO; DERWENT	OR	OFF	2020/02/25 11:38
L45	31831	G06T2207/10024.cpc.	US-PGPUB; USPAT; USOCR; FPRS; EPO; JPO; DERWENT	OR	OFF	2020/02/25 11:38
L46	12	12 and L45	US-PGPUB; USPAT; USOCR; FPRS; EPO; JPO; DERWENT	OR	OFF	2020/02/25 11:38
L47	4461	B08B9/08.cpc.	US-PGPUB; USPAT; USOCR; FPRS; EPO; JPO; DERWENT	OR	OFF	2020/02/25 11:38
L48	0	12 and L47	US-PGPUB; USPAT; USOCR; FPRS; EPO; JPO; DERWENT	OR	OFF	2020/02/25 11:38
L49	619	B08B9/46.cpc.	US-PGPUB; USPAT; USOCR; FPRS; EPO; JPO; DERWENT	OR	OFF	2020/02/25 11:38
L50	0	12 and L49	US-PGPUB; USPAT; USOCR; FPRS; EPO; JPO; DERWENT	OR	OFF	2020/02/25 11:38
L51	228	348/114.ccls.	US-PGPUB; USPAT; USOCR; FPRS;	OR	OFF	2020/02/25 11:38

			EPO; JPO; DERWENT			
L52	2	12 and L51	US-PGPUB; USPAT; USOCR; FPRS; EPO; JPO; DERWENT	OR	OFF	2020/02/25 11:38
L53	54	pool with (clean or cleanness or neatness or cleanliness) near4 (characteristic$1 or threshold$1 or value$1 or number$1) with water	US-PGPUB; USPAT; USOCR; FPRS; EPO; JPO; DERWENT	OR	OFF	2020/02/25 11:38
L54	42	(pool or water or underwater) near4 (image or picture) with compar$3 with threshold$1	US-PGPUB; USPAT; USOCR; FPRS; EPO; JPO; DERWENT	OR	OFF	2020/02/25 11:39
L55	92	vehicle near2 (body or housing) with clean$3 near2 pool	US-PGPUB; USPAT; USOCR; FPRS; EPO; JPO; DERWENT	OR	OFF	2020/02/25 11:39
S1	48	durvasula-kameshwar.in.	US-PGPUB; USPAT; USOCR; FPRS; EPO; JPO; DERWENT	OR	OFF	2020/01/09 11:00
S2	33	correa-william-londono.in.	US-PGPUB; USPAT; USOCR; FPRS; EPO; JPO; DERWENT	OR	OFF	2020/01/09 11:01
S3	80	(aqua adj products).as.	US-PGPUB; USPAT; USOCR; FPRS; EPO; JPO; DERWENT	OR	OFF	2020/01/09 11:01
S4	11008	G05D1/0246.cpc.	US-PGPUB; USPAT; USOCR; FPRS; EPO; JPO; DERWENT	OR	OFF	2020/01/09 11:05
S5	4066	G05D1/0016.cpc.	US-PGPUB; USPAT;	OR	OFF	2020/01/09 11:05

			USOCR; FPRS; EPO; JPO; DERWENT			
S6	1765	G05D1/0033.cpc.	US-PGPUB; USPAT; USOCR; FPRS; EPO; JPO; DERWENT	OR	OFF	2020/01/09 11:05
S7	3222	G05D1/0038.cpc.	US-PGPUB; USPAT; USOCR; FPRS; EPO; JPO; DERWENT	OR	OFF	2020/01/09 11:05
S8	3378	G05D1/0206.cpc.	US-PGPUB; USPAT; USOCR; FPRS; EPO; JPO; DERWENT	OR	OFF	2020/01/09 11:05
S9	1049	G05D1/0253.cpc.	US-PGPUB; USPAT; USOCR; FPRS; EPO; JPO; DERWENT	OR	OFF	2020/01/09 11:05
S10	6090	G05D2201/0203.cpc.	US-PGPUB; USPAT; USOCR; FPRS; EPO; JPO; DERWENT	OR	OFF	2020/01/09 11:06
S11	11493	H04N5/23203.cpc.	US-PGPUB; USPAT; USOCR; FPRS; EPO; JPO; DERWENT	OR	OFF	2020/01/09 11:06
S12	31744	H04N7/18.cpc.	US-PGPUB; USPAT; USOCR; FPRS; EPO; JPO; DERWENT	OR	OFF	2020/01/09 11:06
S13	12150	H04N2005/2255.cpc.	US-PGPUB; USPAT; USOCR; FPRS; EPO; JPO; DERWENT	OR	OFF	2020/01/09 11:07
S14	3878	E04H4/1654.cpc.	US-	OR	OFF	2020/01/09

			PGPUB; USPAT; USOCR; FPRS; EPO; JPO; DERWENT			11:07
S15	15614	G06T7/90.cpc.	US-PGPUB; USPAT; USOCR; FPRS; EPO; JPO; DERWENT	OR	OFF	2020/01/09 11:08
S16	13415	G06T7/001.cpc.	US-PGPUB; USPAT; USOCR; FPRS; EPO; JPO; DERWENT	OR	OFF	2020/01/09 11:08
S17	30819	G06T2207/10024.cpc.	US-PGPUB; USPAT; USOCR; FPRS; EPO; JPO; DERWENT	OR	OFF	2020/01/09 11:08
S18	4342	B08B9/08.cpc.	US-PGPUB; USPAT; USOCR; FPRS; EPO; JPO; DERWENT	OR	OFF	2020/01/09 11:08
S19	604	B08B9/46.cpc.	US-PGPUB; USPAT; USOCR; FPRS; EPO; JPO; DERWENT	OR	OFF	2020/01/09 11:08
S20	230	348/114.ccls.	US-PGPUB; USPAT; USOCR; FPRS; EPO; JPO; DERWENT	OR	OFF	2020/01/09 11:09
S21	14	pool near2 clean$3 with camera$1 with motor$3	US-PGPUB; USPAT; USOCR; FPRS; EPO; JPO; DERWENT	OR	OFF	2020/01/09 11:09
S22	106	pool near2 clean$3 with camera$1	US-PGPUB; USPAT; USOCR; FPRS; EPO; JPO;	OR	OFF	2020/01/09 11:09

			DERWENT			
S23	141	pool near2 clean$3 same camera$1	US-PGPUB; USPAT; USOCR; FPRS; EPO; JPO; DERWENT	OR	OFF	2020/01/09 11:10
S24	2409	pool near2 clean$3 with (processor$1 or control$4)	US-PGPUB; USPAT; USOCR; FPRS; EPO; JPO; DERWENT	OR	OFF	2020/01/09 11:10
S25	25	S24 and S1	US-PGPUB; USPAT; USOCR; FPRS; EPO; JPO; DERWENT	OR	OFF	2020/01/09 11:10
S26	14	S24 and S2	US-PGPUB; USPAT; USOCR; FPRS; EPO; JPO; DERWENT	OR	OFF	2020/01/09 11:10
S27	53	S24 and S3	US-PGPUB; USPAT; USOCR; FPRS; EPO; JPO; DERWENT	OR	OFF	2020/01/09 11:10
S28	16	S24 and S4	US-PGPUB; USPAT; USOCR; FPRS; EPO; JPO; DERWENT	OR	OFF	2020/01/09 11:10
S29	22	S24 and S5	US-PGPUB; USPAT; USOCR; FPRS; EPO; JPO; DERWENT	OR	OFF	2020/01/09 11:10
S30	16	S24 and S6	US-PGPUB; USPAT; USOCR; FPRS; EPO; JPO; DERWENT	OR	OFF	2020/01/09 11:11
S31	17	S24 and S7	US-PGPUB; USPAT; USOCR;	OR	OFF	2020/01/09 11:11

			FPRS; EPO; JPO; DERWENT			
S32	20	S24 and S8	US-PGPUB; USPAT; USOCR; FPRS; EPO; JPO; DERWENT	OR	OFF	2020/01/09 11:11
S33	0	S24 and S9	US-PGPUB; USPAT; USOCR; FPRS; EPO; JPO; DERWENT	OR	OFF	2020/01/09 11:11
S34	63	S24 and S10	US-PGPUB; USPAT; USOCR; FPRS; EPO; JPO; DERWENT	OR	OFF	2020/01/09 11:11
S35	14	S24 and S11	US-PGPUB; USPAT; USOCR; FPRS; EPO; JPO; DERWENT	OR	OFF	2020/01/09 11:11
S36	15	S24 and S12	US-PGPUB; USPAT; USOCR; FPRS; EPO; JPO; DERWENT	OR	OFF	2020/01/09 11:11
S37	13	S24 and S13	US-PGPUB; USPAT; USOCR; FPRS; EPO; JPO; DERWENT	OR	OFF	2020/01/09 11:11
S38	707	S24 and S14	US-PGPUB; USPAT; USOCR; FPRS; EPO; JPO; DERWENT	OR	OFF	2020/01/09 11:11
S39	14	S24 and S15	US-PGPUB; USPAT; USOCR; FPRS; EPO; JPO; DERWENT	OR	OFF	2020/01/09 11:11
S40	13	S24 and S16	US-PGPUB;	OR	OFF	2020/01/09 11:11

			USPAT; USOCR; FPRS; EPO; JPO; DERWENT			
S41	13	S24 and S17	US-PGPUB; USPAT; USOCR; FPRS; EPO; JPO; DERWENT	OR	OFF	2020/01/09 11:11
S42	14	S24 and S18	US-PGPUB; USPAT; USOCR; FPRS; EPO; JPO; DERWENT	OR	OFF	2020/01/09 11:11
S43	0	S24 and S19	US-PGPUB; USPAT; USOCR; FPRS; EPO; JPO; DERWENT	OR	OFF	2020/01/09 11:11
S44	3	S24 and S20	US-PGPUB; USPAT; USOCR; FPRS; EPO; JPO; DERWENT	OR	OFF	2020/01/09 11:11
S45	2	"20130152970".pn.	US-PGPUB; USPAT; USOCR; FPRS; EPO; JPO; DERWENT	OR	OFF	2020/01/09 11:11
S46	76	("5205174" "5435031" "5507058" "5613261" "5886630" "7123746" "7362351" "7398138" "7993600" "8007653" "8043070" "9388595" "9995051" "10338599" "20020097322" "20040025268" "20040040581" "20070094817" "20100299016" "20110091329" "20110290707" "20110301752" "20130151061" "20130269097" "20140009748").pn.	US-PGPUB; USPAT; USOCR; FPRS; EPO; JPO; DERWENT	OR	OFF	2020/01/09 11:16
S47	19	pool near2 clean$3 same camera$1 same (control$4 or processor$1) same filter$3	US-PGPUB; USPAT; USOCR; FPRS; EPO; JPO; DERWENT	OR	OFF	2020/01/09 13:10
S48	30	pool near4 clean$3 with camera with (processor or controller or CPU)	US-PGPUB; USPAT; USOCR;	OR	OFF	2020/01/09 15:27

			FPRS; EPO; JPO; DERWENT			
S49	793	pool near4 clean$3 with (processor or controller or CPU)	US-PGPUB; USPAT; USOCR; FPRS; EPO; JPO; DERWENT	OR	OFF	2020/01/09 15:27
S50	57	pool near4 clean$3 same camera same (processor or controller or CPU)	US-PGPUB; USPAT; USOCR; FPRS; EPO; JPO; DERWENT	OR	OFF	2020/01/09 15:28
S51	176	pool near4 clean$3 and camera same (processor or controller or CPU)	US-PGPUB; USPAT; USOCR; FPRS; EPO; JPO; DERWENT	OR	OFF	2020/01/09 15:28
S52	19	pool near4 clean$3 and camera same (processor or controller or CPU) with motor	US-PGPUB; USPAT; USOCR; FPRS; EPO; JPO; DERWENT	OR	OFF	2020/01/09 15:28
S53	29	pool near4 clean$3 and camera same (processor or controller or CPU) same motor	US-PGPUB; USPAT; USOCR; FPRS; EPO; JPO; DERWENT	OR	OFF	2020/01/09 15:28
S54	2	(reclean$3 or re-clean$3) near8 pool$1 with motor	US-PGPUB; USPAT; USOCR; FPRS; EPO; JPO; DERWENT	OR	OFF	2020/01/09 15:28
S55	2	(reclean$3 or re-clean$3) near8 pool$1 same motor	US-PGPUB; USPAT; USOCR; FPRS; EPO; JPO; DERWENT	OR	OFF	2020/01/09 15:28
S56	8	(reclean$3 or re-clean$3) near8 pool$1 same (processor$1 or controller or CPU)	US-PGPUB; USPAT; USOCR; FPRS; EPO; JPO; DERWENT	OR	OFF	2020/01/09 15:28
S57	8	(reclean$3 or re-clean$3) near8 pool$1 with (processor$1 or controller or CPU)	US-PGPUB;	OR	OFF	2020/01/09 15:29

			USPAT; USOCR; FPRS; EPO; JPO; DERWENT			
S58	85	pool near4 clean$3 and camera same (processor or controller or CPU) same (display$3 or monitor$$4)	US-PGPUB; USPAT; USOCR; FPRS; EPO; JPO; DERWENT	OR	OFF	2020/01/09 15:34
S59	7	pool near4 clean$3 with cleanliness near2 (threshold$1 or value$1)	US-PGPUB; USPAT; USOCR; FPRS; EPO; JPO; DERWENT	OR	OFF	2020/01/09 15:34
S60	19	pool near4 clean$3 with (clean or cleanness or neatness or cleanliness) near2 (threshold$1 or value$1)	US-PGPUB; USPAT; USOCR; FPRS; EPO; JPO; DERWENT	OR	OFF	2020/01/09 15:35
S61	22	pool near4 clean$3 same (clean or cleanness or neatness or cleanliness) near2 (threshold$1 or value$1)	US-PGPUB; USPAT; USOCR; FPRS; EPO; JPO; DERWENT	OR	OFF	2020/01/09 15:35
S62	51	pool near4 clean$3 and (clean or cleanness or neatness or cleanliness) near2 (threshold$1 or value$1)	US-PGPUB; USPAT; USOCR; FPRS; EPO; JPO; DERWENT	OR	OFF	2020/01/09 15:35
S63	90	pool near4 clean$3 with (clean or cleanness or neatness or cleanliness) near4 (characteristic$1 or threshold$1 or value$1 or number$1)	US-PGPUB; USPAT; USOCR; FPRS; EPO; JPO; DERWENT	OR	OFF	2020/01/09 15:35
S64	103	pool near4 clean$3 same (clean or cleanness or neatness or cleanliness) near4 (characteristic$1 or threshold$1 or value$1 or number$1)	US-PGPUB; USPAT; USOCR; FPRS; EPO; JPO; DERWENT	OR	OFF	2020/01/09 15:35
S65	229	pool near4 clean$3 and (clean or cleanness or neatness or cleanliness) near4 (characteristic$1 or threshold$1 or value$1 or number$1)	US-PGPUB; USPAT; USOCR; FPRS; EPO; JPO; DERWENT	OR	OFF	2020/01/09 15:36

S66	140	pool with (clean or cleanness or neatness or cleanliness) near4 (characteristic$1 or threshold$1 or value$1 or number$1)	US-PGPUB; USPAT; USOCR; FPRS; EPO; JPO; DERWENT	OR	OFF	2020/01/09 15:36
S67	53	pool with (clean or cleanness or neatness or cleanliness) near4 (characteristic$1 or threshold$1 or value$1 or number$1) with water	US-PGPUB; USPAT; USOCR; FPRS; EPO; JPO; DERWENT	OR	OFF	2020/01/09 15:36
S68	53	pool with (clean or cleanness or neatness or cleanliness) near4 (characteristic$1 or threshold$1 or value$1 or number$1) with (water or underwater)	US-PGPUB; USPAT; USOCR; FPRS; EPO; JPO; DERWENT	OR	OFF	2020/01/09 15:37
S69	40	(pool or water or underwater) near4 (image or picture) with compar$3 with threshold$1	US-PGPUB; USPAT; USOCR; FPRS; EPO; JPO; DERWENT	OR	OFF	2020/01/09 15:37
S70	48	durvasula-kameshwar.in.	US-PGPUB; USPAT; USOCR; FPRS; EPO; JPO; DERWENT	OR	OFF	2020/01/09 19:00

2/25/2020 12:11:35 PM
C:\Users\awong1\Documents\EAST\Workspaces\16416840_022520.wsp

IN THE UNITED STATES PATENT AND TRADEMARK OFFICE

In re Application of:	)	
	)	
K. Durvasula, *et al.*	)	Group Art Unit: 2488
	)	
Serial No.: 16/416,840	)	Examiner: A. Wong
	)	
Filed: May 20, 2019	)	Conf. No.: 5789
	)	
For: POOL CLEANING SYSTEM AND METHOD TO AUTOMATICALLY CLEAN SURFACES OF A POOL USING IMAGES FROM A CAMERA	)	

March 24, 2020
Attorney Docket No. 105650-1141487

Certificate of Electronic Filing
I hereby certify that this correspondence is being electronically filed with The United States Patent Office via EFS Web, on March 24, 2020.

/Sandee Harvey/
Sandee Harvey

Commissioner for Patents
P.O. Box 1450
Alexandria, Virginia 22313-1450

AMENDMENT, RESPONSE, AND SUBMISSION OF TERMINAL DISCLAIMER

Dear Sir:

This paper is submitted in response to the Office Action transmitted February 28, 2020 in connection with the above-identified application.

Amendment

Kindly amend the claims of the application as follow:

1.-19. (cancelled)

20. (previously presented) A self-propelled pool cleaner for cleaning debris from a submerged surface of a swimming pool, comprising:

a. a vehicle body;

b. means for moving the vehicle body within the swimming pool;

c. a filter configured to retain debris collected from the submerged surface;

d. at least one camera positioned on or in the body for capturing an image of at least a first portion of the submerged surface; and

e. a controller (i) positioned on or in the body, (ii) in electronic communication with the at least one camera, and (iii) configured to generate at least one control signal to cause movement of the body within the swimming pool to the first portion of the submerged surface when the captured image fails to satisfy a pre-defined threshold.

21. (new) A self-propelled pool cleaner according to claim 20 in which the means for moving the vehicle body comprises a propulsion mechanism selected from the group consisting of at least one jet or at least one rotatably-mounted support.

WYBOTICS EX1009
Wybotics v. Zodiac
Page 146

22. (new) A self-propelled pool cleaner according to claim 21 in which the propulsion mechanism is at least one rotatably-mounted support selected from the group consisting of a wheel, a roller, a track, or a scrubbing member.

23. (new) A self-propelled pool cleaner according to claim 20 further comprising an electric motor for driving the means for moving the vehicle body.

24. (new) A self-propelled pool cleaner according to claim 23 in which the controller controls electric power provided to the electric motor.

25. (new) A self-propelled pool cleaner according to claim 20 in which the controller is operable to execute a cleaning program for cleaning the submerged surface.

WYBOTICS EX1009
Wybotics v. Zodiac
Page 147

Response

Prior to entry of the preceding amendments, claim 20 was pending in the application and rejected solely under the doctrine of non-statutory double patenting. To expedite allowance of the application, but without conceding the correctness of the rejection, Applicant submits herewith an executed Terminal Disclaimer referencing cited U.S. Patent No. 9,995,051. Applicant accordingly requests that claim 20 (and new dependent claims 21-25) be allowed and that a patent containing these claims issue in due course.

OF COUNSEL:

Kilpatrick Townsend & Stockton LLP
1100 Peachtree Street
Suite 2800
Atlanta, Georgia 30309
(404) 815-6528

Respectfully submitted,

/Dean W. Russell/

Dean W. Russell
Reg. No. 33,452
Attorney for the Assignee

WYBOTICS EX1009
Wybotics v. Zodiac
Page 148

PTO/AIA/26 (04-14)
Approved for use through 11/30/2020. OMB 0651-0031
U.S. Patent and Trademark Office; U.S. DEPARTMENT OF COMMERCE
Under the Paperwork Reduction Act of 1995, no persons are required to respond to a collection of information unless it displays a valid OMB control number.

TERMINAL DISCLAIMER TO OBVIATE A DOUBLE PATENTING REJECTION OVER A "PRIOR" PATENT

Docket Number (Optional)
105650-1141487

In re Application of: Kameshwar Durvasula

Application No.: 16/416,840

Filed: May 20, 2019

For: POOL CLEANING SYSTEM AND METHOD TO AUTOMATICALLY CLEAN SURFACES OF A POOL USING IMAGES FROM A CAMERA

The applicant, Aqua Products, Inc., owner of 100 percent interest in the instant application hereby disclaims, except as provided below, the terminal part of the statutory term of any patent granted on the instant application which would extend beyond the expiration date of the full statutory term of **prior patent** No. 9,995,051 as the term of said **prior patent** is presently shortened by any terminal disclaimer. The applicant hereby agrees that any patent so granted on the instant application shall be enforceable only for and during such period that it and the **prior patent** are commonly owned. This agreement runs with any patent granted on the instant application and is binding upon the grantee, its successors or assigns.

In making the above disclaimer, the applicant does not disclaim the terminal part of the term of any patent granted on the instant application that would extend to the expiration date of the full statutory term of the **prior patent**, "as the term of said **prior patent** is presently shortened by any terminal disclaimer," in the event that said **prior patent** later:

expires for failure to pay a maintenance fee;
is held unenforceable;
is found invalid by a court of competent jurisdiction;
is statutorily disclaimed in whole or terminally disclaimed under 37 CFR 1.321;
has all claims canceled by a reexamination certificate;
is reissued; or
is in any manner terminated prior to the expiration of its full statutory term as presently shortened by any terminal disclaimer.

Check either box 1 or 2 below, if appropriate.

1. ☐ The undersigned is the applicant. If the applicant is an assignee, the undersigned is authorized to act on behalf of the assignee.

I hereby acknowledge that any willful false statements made are punishable under 18 U.S.C. 1001 by fine or imprisonment of not more than five (5) years, or both.

2. ☑ The undersigned is an attorney or agent of record. Reg. No. 33452

/ Dean W. Russell /	2020-03-24
Signature	Date
Dean W. Russell	
Typed or printed name	
Attorney for Applicant	404-815-6500
Title	Telephone Number

☑ Terminal disclaimer fee under 37 CFR 1.20(d) included.

WARNING: Information on this form may become public. Credit card information should not be included on this form. Provide credit card information and authorization on PTO-2038.

This collection of information is required by 37 CFR 1.321. The information is required to obtain or retain a benefit by the public which is to file (and by the USPTO to process) an application. Confidentiality is governed by 35 U.S.C. 122 and 37 CFR 1.11 and 1.14. This collection is estimated to take 12 minutes to complete, including gathering, preparing, and submitting the completed application form to the USPTO. Time will vary depending upon the individual case. Any comments on the amount of time you require to complete this form and/or suggestions for reducing this burden, should be sent to the Chief Information Officer, U.S. Patent and Trademark Office, U.S. Department of Commerce, P.O. Box 1450, Alexandria, VA 22313-1450. DO NOT SEND FEES OR COMPLETED FORMS TO THIS ADDRESS. **SEND TO: Commissioner for Patents, P.O. Box 1450, Alexandria, VA 22313-1450.**

If you need assistance in completing the form, call 1-800-PTO-9199 and select option 2.

Privacy Act Statement

The **Privacy Act of 1974 (P.L. 93-579)** requires that you be given certain information in connection with your submission of the attached form related to a patent application or patent. Accordingly, pursuant to the requirements of the Act, please be advised that: (1) the general authority for the collection of this information is 35 U.S.C. 2(b)(2); (2) furnishing of the information solicited is voluntary; and (3) the principal purpose for which the information is used by the U.S. Patent and Trademark Office is to process and/or examine your submission related to a patent application or patent. If you do not furnish the requested information, the U.S. Patent and Trademark Office may not be able to process and/or examine your submission, which may result in termination of proceedings or abandonment of the application or expiration of the patent.

The information provided by you in this form will be subject to the following routine uses:

1. The information on this form will be treated confidentially to the extent allowed under the Freedom of Information Act (5 U.S.C. 552) and the Privacy Act (5 U.S.C 552a). Records from this system of records may be disclosed to the Department of Justice to determine whether disclosure of these records is required by the Freedom of Information Act.
2. A record from this system of records may be disclosed, as a routine use, in the course of presenting evidence to a court, magistrate, or administrative tribunal, including disclosures to opposing counsel in the course of settlement negotiations.
3. A record in this system of records may be disclosed, as a routine use, to a Member of Congress submitting a request involving an individual, to whom the record pertains, when the individual has requested assistance from the Member with respect to the subject matter of the record.
4. A record in this system of records may be disclosed, as a routine use, to a contractor of the Agency having need for the information in order to perform a contract. Recipients of information shall be required to comply with the requirements of the Privacy Act of 1974, as amended, pursuant to 5 U.S.C. 552a(m).
5. A record related to an International Application filed under the Patent Cooperation Treaty in this system of records may be disclosed, as a routine use, to the International Bureau of the World Intellectual Property Organization, pursuant to the Patent Cooperation Treaty.
6. A record in this system of records may be disclosed, as a routine use, to another federal agency for purposes of National Security review (35 U.S.C. 181) and for review pursuant to the Atomic Energy Act (42 U.S.C. 218(c)).
7. A record from this system of records may be disclosed, as a routine use, to the Administrator, General Services, or his/her designee, during an inspection of records conducted by GSA as part of that agency's responsibility to recommend improvements in records management practices and programs, under authority of 44 U.S.C. 2904 and 2906. Such disclosure shall be made in accordance with the GSA regulations governing inspection of records for this purpose, and any other relevant (*i.e.*, GSA or Commerce) directive. Such disclosure shall not be used to make determinations about individuals.
8. A record from this system of records may be disclosed, as a routine use, to the public after either publication of the application pursuant to 35 U.S.C. 122(b) or issuance of a patent pursuant to 35 U.S.C. 151. Further, a record may be disclosed, subject to the limitations of 37 CFR 1.14, as a routine use, to the public if the record was filed in an application which became abandoned or in which the proceedings were terminated and which application is referenced by either a published application, an application open to public inspection or an issued patent.
9. A record from this system of records may be disclosed, as a routine use, to a Federal, State, or local law enforcement agency, if the USPTO becomes aware of a violation or potential violation of law or regulation.

Electronic Patent Application Fee Transmittal

Application Number:	16416840
Filing Date:	20-May-2019
Title of Invention:	POOL CLEANING SYSTEM AND METHOD TO AUTOMATICALLY CLEAN SURFACES OF A POOL USING IMAGES FROM A CAMERA
First Named Inventor/Applicant Name:	Kameshwar Durvasula
Filer:	Dean W. Russell/Sandee Harvey-McCullough
Attorney Docket Number:	105650-1141487

Filed as Large Entity

Filing Fees for Utility under 35 USC 111(a)

Description	Fee Code	Quantity	Amount	Sub-Total in USD($)
Basic Filing:				
Pages:				
Claims:				
Miscellaneous-Filing:				
Petition:				
Patent-Appeals-and-Interference:				
Post-Allowance-and-Post-Issuance:				
Extension-of-Time:				

Description	Fee Code	Quantity	Amount	Sub-Total in USD($)
Miscellaneous:				
STATUTORY OR TERMINAL DISCLAIMER	1814	1	160	160
		Total in USD ($)		**160**

Electronic Acknowledgement Receipt

EFS ID:	38953880
Application Number:	16416840
International Application Number:	
Confirmation Number:	5789
Title of Invention:	POOL CLEANING SYSTEM AND METHOD TO AUTOMATICALLY CLEAN SURFACES OF A POOL USING IMAGES FROM A CAMERA
First Named Inventor/Applicant Name:	Kameshwar Durvasula
Customer Number:	23370
Filer:	Dean W. Russell/Sandee Harvey-McCullough
Filer Authorized By:	Dean W. Russell
Attorney Docket Number:	105650-1141487
Receipt Date:	24-MAR-2020
Filing Date:	20-MAY-2019
Time Stamp:	15:02:57
Application Type:	Utility under 35 USC 111(a)

Payment information:

Submitted with Payment	yes
Payment Type	CARD
Payment was successfully received in RAM	$160
RAM confirmation Number	E20203NF04575599
Deposit Account	201430
Authorized User	Sandee Harvey-McCullough

The Director of the USPTO is hereby authorized to charge indicated fees and credit any overpayment as follows:

37 CFR 1.16 (National application filing, search, and examination fees)

37 CFR 1.17 (Patent application and reexamination processing fees)

37 CFR 1.19 (Document supply fees)

37 CFR 1.20 (Post Issuance fees)

37 CFR 1.21 (Miscellaneous fees and charges)

File Listing:

Document Number	Document Description	File Name	File Size(Bytes)/ Message Digest	Multi Part /.zip	Pages (if appl.)
1		1141487_AMD.pdf	120825 e46000551680f33ca13406045c7f09794bec06a0	yes	4
	Multipart Description/PDF files in .zip description				
	Document Description		**Start**	**End**	
	Amendment/Req. Reconsideration-After Non-Final Reject		1	1	
	Claims		2	3	
	Applicant Arguments/Remarks Made in an Amendment		4	4	
Warnings:					
Information:					
2	Terminal Disclaimer Filed	1141487_TERMDISC.pdf	156091 f5ecf01c58d64e8e24d30f4f9dcf4b60423293cd	no	2
Warnings:					
Information:					
3	Fee Worksheet (SB06)	fee-info.pdf	30659 143e2ae9be7b30fb2dc784226183209a6dbbb859	no	2
Warnings:					
Information:					
		Total Files Size (in bytes):	307575		

This Acknowledgement Receipt evidences receipt on the noted date by the USPTO of the indicated documents, characterized by the applicant, and including page counts, where applicable. It serves as evidence of receipt similar to a Post Card, as described in MPEP 503.

New Applications Under 35 U.S.C. 111
If a new application is being filed and the application includes the necessary components for a filing date (see 37 CFR 1.53(b)-(d) and MPEP 506), a Filing Receipt (37 CFR 1.54) will be issued in due course and the date shown on this Acknowledgement Receipt will establish the filing date of the application.
National Stage of an International Application under 35 U.S.C. 371
If a timely submission to enter the national stage of an international application is compliant with the conditions of 35 U.S.C. 371 and other applicable requirements a Form PCT/DO/EO/903 indicating acceptance of the application as a national stage submission under 35 U.S.C. 371 will be issued in addition to the Filing Receipt, in due course.
New International Application Filed with the USPTO as a Receiving Office
If a new international application is being filed and the international application includes the necessary components for an international filing date (see PCT Article 11 and MPEP 1810), a Notification of the International Application Number and of the International Filing Date (Form PCT/RO/105) will be issued in due course, subject to prescriptions concerning national security, and the date shown on this Acknowledgement Receipt will establish the international filing date of the application.

PTO/SB/06 (09-11)
Approved for use through 1/31/2014. OMB 0651-0032
U.S. Patent and Trademark Office; U.S. DEPARTMENT OF COMMERCE
Under the Paperwork Reduction Act of 1995, no persons are required to respond to a collection of information unless it displays a valid OMB control number.

PATENT APPLICATION FEE DETERMINATION RECORD Substitute for Form PTO-875	Application or Docket Number 16/416,840	Filing Date 05/20/2019	☐ To be Mailed

ENTITY: ☑ LARGE ☐ SMALL ☐ MICRO

APPLICATION AS FILED - PART I

FOR	(Column 1) NUMBER FILED	(Column 2) NUMBER EXTRA		RATE ($)	FEE ($)
☐ BASIC FEE (37 CFR 1.16(a), (b), or (c))	N/A	N/A		N/A	
☐ SEARCH FEE (37 CFR 1.16(k), (i), or (m))	N/A	N/A		N/A	
☐ EXAMINATION FEE (37 CFR 1.16(o), (p), or (q))	N/A	N/A		N/A	
TOTAL CLAIMS (37 CFR 1.16(i))	minus 20 =	*		x $100 =	
INDEPENDENT CLAIMS (37 CFR 1.16(h))	minus 3 =	*		x $460 =	
☐ APPLICATION SIZE FEE (37 CFR 1.16(s))	If the specification and drawings exceed 100 sheets of paper, the application size fee due is $310 ($155 for small entity) for each additional 50 sheets or fraction thereof. See 35 U.S.C. 41(a)(1)(G) and 37 CFR 1.16(s).				
☐ MULTIPLE DEPENDENT CLAIM PRESENT (37 CFR 1.16(j))					
* If the difference in column 1 is less than zero, enter "0" in column 2.				TOTAL	

APPLICATION AS AMENDED - PART II

AMENDMENT	03/24/2020	(Column 1) CLAIMS REMAINING AFTER AMENDMENT		(Column 2) HIGHEST NUMBER PREVIOUSLY PAID FOR	(Column 3) PRESENT EXTRA		RATE ($)	ADDITIONAL FEE ($)
	Total (37 CFR 1.16(i))	* 6	Minus	** 20	= 0		x $100 =	0
	Independent (37 CFR 1.16(h))	* 1	Minus	*** 3	= 0		x $460 =	0
	☐ Application Size Fee (37 CFR 1.16(s))							
	☐ FIRST PRESENTATION OF MULTIPLE DEPENDENT CLAIM (37 CFR 1.16(j))							
							TOTAL ADD'L FEE	0

AMENDMENT		(Column 1) CLAIMS REMAINING AFTER AMENDMENT		(Column 2) HIGHEST NUMBER PREVIOUSLY PAID FOR	(Column 3) PRESENT EXTRA		RATE ($)	ADDITIONAL FEE ($)
	Total (37 CFR 1.16(i))	*	Minus	**	=		x $0 =	
	Independent (37 CFR 1.16(h))	*	Minus	***	=		x $0 =	
	☐ Application Size Fee (37 CFR 1.16(s))							
	☐ FIRST PRESENTATION OF MULTIPLE DEPENDENT CLAIM (37 CFR 1.16(j))							
							TOTAL ADD'L FEE	

* If the entry in column 1 is less than the entry in column 2, write "0" in column 3.	LIE
** If the "Highest Number Previously Paid For" IN THIS SPACE is less than 20, enter "20".	/KIM P DOZIER/
*** If the "Highest Number Previously Paid For" IN THIS SPACE is less than 3, enter "3".	
The "Highest Number Previously Paid For" (Total or Independent) is the highest number found in the appropriate box in column 1.	

This collection of information is required by 37 CFR 1.16. The information is required to obtain or retain a benefit by the public which is to file (and by the USPTO to process) an application. Confidentiality is governed by 35 U.S.C. 122 and 37 CFR 1.14. This collection is estimated to take 12 minutes to complete, including gathering, preparing, and submitting the completed application form to the USPTO. Time will vary depending upon the individual case. Any comments on the amount of time you require to complete this form and/or suggestions for reducing this burden, should be sent to the Chief Information Officer, U.S. Patent and Trademark Office, U.S. Department of Commerce, P.O. Box 1450, Alexandria, VA 22313-1450. DO NOT SEND FEES OR COMPLETED FORMS TO THIS ADDRESS. **SEND TO: Commissioner for Patents, P.O. Box 1450, Alexandria, VA 22313-1450.**

If you need assistance in completing the form, call 1-800-PTO-9199 and select option 2.

Application Number	Application/Control No.	Applicant(s)/Patent under Reexamination	
* 16/416,840 *	16/416,840	Durvasula et al.	
	Examiner	Art Unit	
	WONG, ALLEN C	2488	

Document Code - DISQ	Internal Document - DO NOT MAIL

TERMINAL DISCLAIMER	☑ APPROVED	☐ DISAPPROVED
Date Filed: 24 March 2020	This patent is subject to a Terminal Disclaimer	

Approved/Disapproved by:

/JEAN PROCTOR/

Technology Center: OPLC

Telephone: (571)272-1040

UNITED STATES PATENT AND TRADEMARK OFFICE

UNITED STATES DEPARTMENT OF COMMERCE
United States Patent and Trademark Office
Address: COMMISSIONER FOR PATENTS
P.O. Box 1450
Alexandria, Virginia 22313-1450
www.uspto.gov

NOTICE OF ALLOWANCE AND FEE(S) DUE

23370 7590 04/29/2020
KILPATRICK TOWNSEND & STOCKTON LLP
MAILSTOP: IP DOCKETING - 22
1100 PEACHTREE STREET
SUITE 2800
ATLANTA, GA 30309

EXAMINER
WONG, ALLEN C

ART UNIT	PAPER NUMBER
2488	

DATE MAILED: 04/29/2020

APPLICATION NO.	FILING DATE	FIRST NAMED INVENTOR	ATTORNEY DOCKET NO.	CONFIRMATION NO.
16/416,840	05/20/2019	Kameshwar Durvasula	105650-1141487	5789

TITLE OF INVENTION: POOL CLEANING SYSTEM AND METHOD TO AUTOMATICALLY CLEAN SURFACES OF A POOL USING IMAGES FROM A CAMERA

APPLN. TYPE	ENTITY STATUS	ISSUE FEE DUE	PUBLICATION FEE DUE	PREV. PAID ISSUE FEE	TOTAL FEE(S) DUE	DATE DUE
nonprovisional	UNDISCOUNTED	$1000	$0.00	$0.00	$1000	07/29/2020

THE APPLICATION IDENTIFIED ABOVE HAS BEEN EXAMINED AND IS ALLOWED FOR ISSUANCE AS A PATENT. PROSECUTION ON THE MERITS IS CLOSED. THIS NOTICE OF ALLOWANCE IS NOT A GRANT OF PATENT RIGHTS. THIS APPLICATION IS SUBJECT TO WITHDRAWAL FROM ISSUE AT THE INITIATIVE OF THE OFFICE OR UPON PETITION BY THE APPLICANT. SEE 37 CFR 1.313 AND MPEP 1308.

THE ISSUE FEE AND PUBLICATION FEE (IF REQUIRED) MUST BE PAID WITHIN THREE MONTHS FROM THE MAILING DATE OF THIS NOTICE OR THIS APPLICATION SHALL BE REGARDED AS ABANDONED. THIS STATUTORY PERIOD CANNOT BE EXTENDED. SEE 35 U.S.C. 151. THE ISSUE FEE DUE INDICATED ABOVE DOES NOT REFLECT A CREDIT FOR ANY PREVIOUSLY PAID ISSUE FEE IN THIS APPLICATION. IF AN ISSUE FEE HAS PREVIOUSLY BEEN PAID IN THIS APPLICATION (AS SHOWN ABOVE), THE RETURN OF PART B OF THIS FORM WILL BE CONSIDERED A REQUEST TO REAPPLY THE PREVIOUSLY PAID ISSUE FEE TOWARD THE ISSUE FEE NOW DUE.

HOW TO REPLY TO THIS NOTICE:

I. Review the ENTITY STATUS shown above. If the ENTITY STATUS is shown as SMALL or MICRO, verify whether entitlement to that entity status still applies.

If the ENTITY STATUS is the same as shown above, pay the TOTAL FEE(S) DUE shown above.

If the ENTITY STATUS is changed from that shown above, on PART B - FEE(S) TRANSMITTAL, complete section number 5 titled "Change in Entity Status (from status indicated above)".

For purposes of this notice, small entity fees are 1/2 the amount of undiscounted fees, and micro entity fees are 1/2 the amount of small entity fees.

II. PART B - FEE(S) TRANSMITTAL, or its equivalent, must be completed and returned to the United States Patent and Trademark Office (USPTO) with your ISSUE FEE and PUBLICATION FEE (if required). If you are charging the fee(s) to your deposit account, section "4b" of Part B - Fee(s) Transmittal should be completed and an extra copy of the form should be submitted. If an equivalent of Part B is filed, a request to reapply a previously paid issue fee must be clearly made, and delays in processing may occur due to the difficulty in recognizing the paper as an equivalent of Part B.

III. All communications regarding this application must give the application number. Please direct all communications prior to issuance to Mail Stop ISSUE FEE unless advised to the contrary.

IMPORTANT REMINDER: Maintenance fees are due in utility patents issuing on applications filed on or after Dec. 12, 1980. It is patentee's responsibility to ensure timely payment of maintenance fees when due. More information is available at www.uspto.gov/PatentMaintenanceFees.

PART B - FEE(S) TRANSMITTAL

Complete and send this form, together with applicable fee(s), by mail or fax, or via EFS-Web.

By mail, send to: Mail Stop ISSUE FEE
Commissioner for Patents
P.O. Box 1450
Alexandria, Virginia 22313-1450

By fax, send to: (571)-273-2885

INSTRUCTIONS: This form should be used for transmitting the ISSUE FEE and PUBLICATION FEE (if required). Blocks 1 through 5 should be completed where appropriate. All further correspondence including the Patent, advance orders and notification of maintenance fees will be mailed to the current correspondence address as indicated unless corrected below or directed otherwise in Block 1, by (a) specifying a new correspondence address; and/or (b) indicating a separate "FEE ADDRESS" for maintenance fee notifications.

CURRENT CORRESPONDENCE ADDRESS (Note: Use Block 1 for any change of address)

23370 7590 04/29/2020
KILPATRICK TOWNSEND & STOCKTON LLP
MAILSTOP: IP DOCKETING - 22
1100 PEACHTREE STREET
SUITE 2800
ATLANTA, GA 30309

Note: A certificate of mailing can only be used for domestic mailings of the Fee(s) Transmittal. This certificate cannot be used for any other accompanying papers. Each additional paper, such as an assignment or formal drawing, must have its own certificate of mailing or transmission.

Certificate of Mailing or Transmission

I hereby certify that this Fee(s) Transmittal is being deposited with the United States Postal Service with sufficient postage for first class mail in an envelope addressed to the Mail Stop ISSUE FEE address above, or being transmitted to the USPTO via EFS-Web or by facsimile to (571) 273-2885, on the date below.

(Typed or printed name)
(Signature)
(Date)

APPLICATION NO.	FILING DATE	FIRST NAMED INVENTOR	ATTORNEY DOCKET NO.	CONFIRMATION NO.
16/416,840	05/20/2019	Kameshwar Durvasula	105650-1141487	5789

TITLE OF INVENTION: POOL CLEANING SYSTEM AND METHOD TO AUTOMATICALLY CLEAN SURFACES OF A POOL USING IMAGES FROM A CAMERA

APPLN. TYPE	ENTITY STATUS	ISSUE FEE DUE	PUBLICATION FEE DUE	PREV. PAID ISSUE FEE	TOTAL FEE(S) DUE	DATE DUE
nonprovisional	UNDISCOUNTED	$1000	$0.00	$0.00	$1000	07/29/2020

EXAMINER	ART UNIT	CLASS-SUBCLASS
WONG, ALLEN C	2488	348-114000

1. Change of correspondence address or indication of "Fee Address" (37 CFR 1.363).

❑ Change of correspondence address (or Change of Correspondence Address form PTO/SB/122) attached.

❑ "Fee Address" indication (or "Fee Address" Indication form PTO/SB/47; Rev 03-09 or more recent) attached. **Use of a Customer Number is required.**

2. For printing on the patent front page, list
(1) The names of up to 3 registered patent attorneys or agents OR, alternatively,
(2) The name of a single firm (having as a member a registered attorney or agent) and the names of up to 2 registered patent attorneys or agents. If no name is listed, no name will be printed.

1_____
2_____
3_____

3. ASSIGNEE NAME AND RESIDENCE DATA TO BE PRINTED ON THE PATENT (print or type)

PLEASE NOTE: Unless an assignee is identified below, no assignee data will appear on the patent. If an assignee is identified below, the document must have been previously recorded, or filed for recordation, as set forth in 37 CFR 3.11 and 37 CFR 3.81(a). Completion of this form is NOT a substitute for filing an assignment.

(A) NAME OF ASSIGNEE (B) RESIDENCE: (CITY and STATE OR COUNTRY)

Please check the appropriate assignee category or categories (will not be printed on the patent) : ❑ Individual ❑ Corporation or other private group entity ❑ Government

4a. Fees submitted: ❑Issue Fee ❑Publication Fee (if required) ❑Advance Order - # of Copies _____

4b. Method of Payment: *(Please first reapply any previously paid fee shown above)*

❑ Electronic Payment via EFS-Web ❑ Enclosed check ❑ Non-electronic payment by credit card (Attach form PTO-2038)

❑ The Director is hereby authorized to charge the required fee(s), any deficiency, or credit any overpayment to Deposit Account No. _____

5. **Change in Entity Status** (from status indicated above)

❑ Applicant certifying micro entity status. See 37 CFR 1.29

❑ Applicant asserting small entity status. See 37 CFR 1.27

❑ Applicant changing to regular undiscounted fee status.

NOTE: Absent a valid certification of Micro Entity Status (see forms PTO/SB/15A and 15B), issue fee payment in the micro entity amount will not be accepted at the risk of application abandonment.
NOTE: If the application was previously under micro entity status, checking this box will be taken to be a notification of loss of entitlement to micro entity status.
NOTE: Checking this box will be taken to be a notification of loss of entitlement to small or micro entity status, as applicable.

NOTE: This form must be signed in accordance with 37 CFR 1.31 and 1.33. See 37 CFR 1.4 for signature requirements and certifications.

Authorized Signature _____ Date _____

Typed or printed name _____ Registration No. _____

UNITED STATES PATENT AND TRADEMARK OFFICE

UNITED STATES DEPARTMENT OF COMMERCE
United States Patent and Trademark Office
Address: COMMISSIONER FOR PATENTS
P.O. Box 1450
Alexandria, Virginia 22313-1450
www.uspto.gov

APPLICATION NO.	FILING DATE	FIRST NAMED INVENTOR	ATTORNEY DOCKET NO.	CONFIRMATION NO.
16/416,840	05/20/2019	Kameshwar Durvasula	105650-1141487	5789

23370 7590 04/29/2020
KILPATRICK TOWNSEND & STOCKTON LLP
MAILSTOP: IP DOCKETING - 22
1100 PEACHTREE STREET
SUITE 2800
ATLANTA, GA 30309

EXAMINER
WONG, ALLEN C

ART UNIT	PAPER NUMBER
2488	

DATE MAILED: 04/29/2020

Determination of Patent Term Adjustment under 35 U.S.C. 154 (b)
(Applications filed on or after May 29, 2000)

The Office has discontinued providing a Patent Term Adjustment (PTA) calculation with the Notice of Allowance.

Section 1(h)(2) of the AIA Technical Corrections Act amended 35 U.S.C. 154(b)(3)(B)(i) to eliminate the requirement that the Office provide a patent term adjustment determination with the notice of allowance. See Revisions to Patent Term Adjustment, 78 Fed. Reg. 19416, 19417 (Apr. 1, 2013). Therefore, the Office is no longer providing an initial patent term adjustment determination with the notice of allowance. The Office will continue to provide a patent term adjustment determination with the Issue Notification Letter that is mailed to applicant approximately three weeks prior to the issue date of the patent, and will include the patent term adjustment on the patent. Any request for reconsideration of the patent term adjustment determination (or reinstatement of patent term adjustment) should follow the process outlined in 37 CFR 1.705.

Any questions regarding the Patent Term Extension or Adjustment determination should be directed to the Office of Patent Legal Administration at (571)-272-7702. Questions relating to issue and publication fee payments should be directed to the Customer Service Center of the Office of Patent Publication at 1-(888)-786-0101 or (571)-272-4200.

OMB Clearance and PRA Burden Statement for PTOL-85 Part B

The Paperwork Reduction Act (PRA) of 1995 requires Federal agencies to obtain Office of Management and Budget approval before requesting most types of information from the public. When OMB approves an agency request to collect information from the public, OMB (i) provides a valid OMB Control Number and expiration date for the agency to display on the instrument that will be used to collect the information and (ii) requires the agency to inform the public about the OMB Control Number's legal significance in accordance with 5 CFR 1320.5(b).

The information collected by PTOL-85 Part B is required by 37 CFR 1.311. The information is required to obtain or retain a benefit by the public which is to file (and by the USPTO to process) an application. Confidentiality is governed by 35 U.S.C. 122 and 37 CFR 1.14. This collection is estimated to take 30 minutes to complete, including gathering, preparing, and submitting the completed application form to the USPTO. Time will vary depending upon the individual case. Any comments on the amount of time you require to complete this form and/or suggestions for reducing this burden, should be sent to the Chief Information Officer, U.S. Patent and Trademark Office, U.S. Department of Commerce, P.O. Box 1450, Alexandria, Virginia 22313-1450. DO NOT SEND FEES OR COMPLETED FORMS TO THIS ADDRESS. SEND TO: Commissioner for Patents, P.O. Box 1450, Alexandria, Virginia 22313-1450. Under the Paperwork Reduction Act of 1995, no persons are required to respond to a collection of information unless it displays a valid OMB control number.

Privacy Act Statement

The Privacy Act of 1974 (P.L. 93-579) requires that you be given certain information in connection with your submission of the attached form related to a patent application or patent. Accordingly, pursuant to the requirements of the Act, please be advised that: (1) the general authority for the collection of this information is 35 U.S.C. 2(b)(2); (2) furnishing of the information solicited is voluntary; and (3) the principal purpose for which the information is used by the U.S. Patent and Trademark Office is to process and/or examine your submission related to a patent application or patent. If you do not furnish the requested information, the U.S. Patent and Trademark Office may not be able to process and/or examine your submission, which may result in termination of proceedings or abandonment of the application or expiration of the patent.

The information provided by you in this form will be subject to the following routine uses:

1. The information on this form will be treated confidentially to the extent allowed under the Freedom of Information Act (5 U.S.C. 552) and the Privacy Act (5 U.S.C 552a). Records from this system of records may be disclosed to the Department of Justice to determine whether disclosure of these records is required by the Freedom of Information Act.
2. A record from this system of records may be disclosed, as a routine use, in the course of presenting evidence to a court, magistrate, or administrative tribunal, including disclosures to opposing counsel in the course of settlement negotiations.
3. A record in this system of records may be disclosed, as a routine use, to a Member of Congress submitting a request involving an individual, to whom the record pertains, when the individual has requested assistance from the Member with respect to the subject matter of the record.
4. A record in this system of records may be disclosed, as a routine use, to a contractor of the Agency having need for the information in order to perform a contract. Recipients of information shall be required to comply with the requirements of the Privacy Act of 1974, as amended, pursuant to 5 U.S.C. 552a(m).
5. A record related to an International Application filed under the Patent Cooperation Treaty in this system of records may be disclosed, as a routine use, to the International Bureau of the World Intellectual Property Organization, pursuant to the Patent Cooperation Treaty.
6. A record in this system of records may be disclosed, as a routine use, to another federal agency for purposes of National Security review (35 U.S.C. 181) and for review pursuant to the Atomic Energy Act (42 U.S.C. 218(c)).
7. A record from this system of records may be disclosed, as a routine use, to the Administrator, General Services, or his/her designee, during an inspection of records conducted by GSA as part of that agency's responsibility to recommend improvements in records management practices and programs, under authority of 44 U.S.C. 2904 and 2906. Such disclosure shall be made in accordance with the GSA regulations governing inspection of records for this purpose, and any other relevant (i.e., GSA or Commerce) directive. Such disclosure shall not be used to make determinations about individuals.
8. A record from this system of records may be disclosed, as a routine use, to the public after either publication of the application pursuant to 35 U.S.C. 122(b) or issuance of a patent pursuant to 35 U.S.C. 151. Further, a record may be disclosed, subject to the limitations of 37 CFR 1.14, as a routine use, to the public if the record was filed in an application which became abandoned or in which the proceedings were terminated and which application is referenced by either a published application, an application open to public inspection or an issued patent.
9. A record from this system of records may be disclosed, as a routine use, to a Federal, State, or local law enforcement agency, if the USPTO becomes aware of a violation or potential violation of law or regulation.

Notice of Allowability	Application No. 16/416,840	Applicant(s) Durvasula et al.	
	Examiner ALLEN C WONG	Art Unit 2488	AIA (FITF) Status Yes

-- The MAILING DATE of this communication appears on the cover sheet with the correspondence address--

All claims being allowable, PROSECUTION ON THE MERITS IS (OR REMAINS) CLOSED in this application. If not included herewith (or previously mailed), a Notice of Allowance (PTOL-85) or other appropriate communication will be mailed in due course. **THIS NOTICE OF ALLOWABILITY IS NOT A GRANT OF PATENT RIGHTS.** This application is subject to withdrawal from issue at the initiative of the Office or upon petition by the applicant. See 37 CFR 1.313 and MPEP 1308.

1. ☑ This communication is responsive to amendment filed 3/24/20.
   ☐ A declaration(s)/affidavit(s) under **37 CFR 1.130(b)** was/were filed on _____.

2. ☐ An election was made by the applicant in response to a restriction requirement set forth during the interview on _____; the restriction requirement and election have been incorporated into this action.

3. ☑ The allowed claim(s) is/are 20-25 . As a result of the allowed claim(s), you may be eligible to benefit from the **Patent Prosecution Highway** program at a participating intellectual property office for the corresponding application. For more information, please see **http://www.uspto.gov/patents/init_events/pph/index.jsp** or send an inquiry to **PPHfeedback@uspto.gov.**

4. ☐ Acknowledgment is made of a claim for foreign priority under 35 U.S.C. § 119(a)-(d) or (f).

   Certified copies:

   a) ☐ All b) ☐ Some *c) ☐ None of the:

   1. ☐ Certified copies of the priority documents have been received.
   2. ☐ Certified copies of the priority documents have been received in Application No. _____ .
   3. ☐ Copies of the certified copies of the priority documents have been received in this national stage application from the International Bureau (PCT Rule 17.2(a)).

   * Certified copies not received: _____ .

Applicant has THREE MONTHS FROM THE "MAILING DATE" of this communication to file a reply complying with the requirements noted below. Failure to timely comply will result in ABANDONMENT of this application.
THIS THREE-MONTH PERIOD IS NOT EXTENDABLE.

5. ☐ CORRECTED DRAWINGS (as "replacement sheets") must be submitted.
   ☐ including changes required by the attached Examiner's Amendment / Comment or in the Office action of Paper No./Mail Date _____ .

   Identifying indicia such as the application number (see 37 CFR 1.84(c)) should be written on the drawings in the front (not the back) of each sheet. Replacement sheet(s) should be labeled as such in the header according to 37 CFR 1.121(d).

6. ☐ DEPOSIT OF and/or INFORMATION about the deposit of BIOLOGICAL MATERIAL must be submitted. Note the attached Examiner's comment regarding REQUIREMENT FOR THE DEPOSIT OF BIOLOGICAL MATERIAL.

Attachment(s)

1. ☑ Notice of References Cited (PTO-892)
2. ☐ Information Disclosure Statements (PTO/SB/08), Paper No./Mail Date _____.
3. ☐ Examiner's Comment Regarding Requirement for Deposit of Biological Material _____.
4. ☐ Interview Summary (PTO-413), Paper No./Mail Date. _____.
5. ☐ Examiner's Amendment/Comment
6. ☑ Examiner's Statement of Reasons for Allowance
7. ☐ Other _____.

/ALLEN C WONG/
Primary Examiner, Art Unit 2488

WYBOTICS EX1009
Wybotics v. Zodiac
Page 162

DETAILED ACTION

Notice of Pre-AIA or AIA Status

The present application is being examined under the pre-AIA first to invent provisions.

Allowable Subject Matter

Claims 20-25 are allowed.

The following is an examiner's statement of reasons for allowance: the present invention pertains to pool cleaning system for cleaning debris inside submerged surfaces of swimming pools.

Porat (US 2011/0290707) discloses a self-propelled pool cleaner for cleaning debris from a submerged surface of a swimming pool (paragraph 78), comprising:

means for moving the vehicle body within the swimming pool (paragraph 78);

a filter configured to retain debris collected from the submerged surface (paragraph 78).

Meneire (US 7,362,351) discloses at least one camera positioned on or in the body for capturing an image of at least a first portion of the submerged surface; and a controller, in electronic communication with the at least one camera (col.14, ln.52-58).

Hui (US 2011/0049023) discloses a self-propelled pool cleaner for cleaning debris from a submerged surface of a swimming pool (paragraph 51), comprising:

a vehicle body (paragraph 51);

means for moving the vehicle body within the swimming pool (paragraph 52);

a controller for causing movement of the vehicle body (paragraph 52).

a filter configured to retain debris collected from the submerged surface (paragraph 50);

Hong (WO 2012/023676 A1) discloses a portable electronic device configured to present a graphic on a display (paragraph 32), the graphic depicting the submerged surface of the pool and those portions of the surface that remain uncleaned as the cleaner traverses the pool surface (paragraph 137).

The prior art, either singularly or in combination, does not disclose the limitation "a controller (i) positioned on or in the body, (ii) in electronic communication with the at least one camera, and (iii) configured to generate at least one control signal to cause movement of the body within the swimming pool to the first portion of the submerged surface when the captured image fails to satisfy a pre-defined threshold" of claim 20.

Thus, the prior art does not disclose the aforementioned limitation used in combination with all of the other limitations of claim 20.

Any comments considered necessary by applicant must be submitted no later than the payment of the issue fee and, to avoid processing delays, should preferably accompany the issue fee. Such submissions should be clearly labeled "Comments on Statement of Reasons for Allowance."

Terminal Disclaimer

The terminal disclaimer filed on 3/24/20 disclaiming the terminal portion of any patent granted on this application which would extend beyond the expiration date of **US Patent Number 9,995,051** has been reviewed and is accepted. The terminal disclaimer has been recorded.

Contact Information

Any inquiry concerning this communication or earlier communications from the examiner should be directed to ALLEN C WONG whose telephone number is (571)272-7341. The examiner can normally be reached on Flex Monday-Thursday 9:30am-7:30pm.

Examiner interviews are available via telephone, in-person, and video conferencing using a USPTO supplied web-based collaboration tool. To schedule an interview, applicant is encouraged to use the USPTO Automated Interview Request (AIR) at http://www.uspto.gov/interviewpractice.

If attempts to reach the examiner by telephone are unsuccessful, the examiner's supervisor, Sath V Perungavoor can be reached on 571-272-7455. The fax phone number for the organization where this application or proceeding is assigned is 571-273-8300.

Information regarding the status of an application may be obtained from the Patent Application Information Retrieval (PAIR) system. Status information for published applications may be obtained from either Private PAIR or Public PAIR. Status information for unpublished applications is available through Private PAIR only. For more information about the PAIR system, see http://pair-direct.uspto.gov. Should you have questions on access to the Private PAIR system, contact the Electronic Business Center (EBC) at 866-217-9197 (toll-free). If you would like assistance from a USPTO Customer Service Representative or access to the automated information system, call 800-786-9199 (IN USA OR CANADA) or 571-272-1000.

/ALLEN C WONG/
Primary Examiner, Art Unit 2488

Notice of References Cited	Application/Control No. 16/416,840	Applicant(s)/Patent Under Reexamination Durvasula et al.	
	Examiner ALLEN C WONG	Art Unit 2488	Page 1 of 1

U.S. PATENT DOCUMENTS

*		Document Number Country Code-Number-Kind Code	Date MM-YYYY	Name	CPC Classification	US Classification
*	A	US-20110290707-A1	12-2011	PORAT; Joseph	C02F1/4674	210/96.1
*	B	US-7362351-B2	04-2008	Meniere; Jerome	G01V8/10	348/135
*	C	US-20110049023-A1	03-2011	HUI; Wing-kin	E04H4/1654	210/91
	D					
	E					
	F					
	G					
	H					
	I					
	J					
	K					
	L					
	M					

FOREIGN PATENT DOCUMENTS

*		Document Number Country Code-Number-Kind Code	Date MM-YYYY	Country	Name	CPC Classification
*	N	WO 2012023676 A1	02-2012	WO	Hong, Young Jin	B08B 9/08
	O					
	P					
	Q					
	R					
	S					
	T					

NON-PATENT DOCUMENTS

*		Include as applicable: Author, Title Date, Publisher, Edition or Volume, Pertinent Pages)
	U	
	V	
	W	
	X	

*A copy of this reference is not being furnished with this Office action. (See MPEP § 707.05(a).)
Dates in MM-YYYY format are publication dates. Classifications may be US or foreign.

Search Notes	Application/Control No.	Applicant(s)/Patent Under Reexamination
	16/416,840	Durvasula et al.
	Examiner	**Art Unit**
	ALLEN C WONG	2488

CPC - Searched*		
Symbol	**Date**	**Examiner**
G05D 1/0246, 0016, 0033, 0038, 0206, 0253; G05D 2201/0203; H04N 5/23203; H04N 7/18; H04N 2005/2255; E04H 4/1654; G06T 7/90, 001; G06T 2207/10024; B08B 9/08, 46	01/09/2020	AW
search updated	02/25/2020	AW
search updated	04/23/2020	AW

CPC Combination Sets - Searched*		
Symbol	**Date**	**Examiner**

US Classification - Searched*			
Class	**Subclass**	**Date**	**Examiner**
348	114	01/09/2020	AW
search	updated	02/25/2020	AW
search	updated	04/23/2020	AW

* See search history printout included with this form or the SEARCH NOTES box below to determine the scope of the search.

/ALLEN C WONG/ Primary Examiner, Art Unit 2488	

WYBOTICS EX1009
Wybotics v. Zodiac
Page 167

Search Notes	Application/Control No.	Applicant(s)/Patent Under Reexamination
	16/416,840	Durvasula et al.
	Examiner	**Art Unit**
	ALLEN C WONG	2488

Search Notes		
Search Notes	**Date**	**Examiner**
refs checked (US Patent Nos.9388595, 9995051, 10338599)	01/09/2020	AW
Inventor Names search	01/09/2020	AW
NPL search (eg. Google Scholar)	01/09/2020	AW
EAST text search	01/09/2020	AW
G05D 1/0246, 0016, 0033, 0038, 0206, 0253; G05D 2201/0203; H04N 5/23203; H04N 7/18; H04N 2005/2255; E04H 4/1654; G06T 7/90, 001; G06T 2207/10024; B08B 9/08, 46 (see search history printout)	01/09/2020	AW
NPL search (eg. IP.com)	04/23/2020	AW

Interference Search			
US Class/CPC Symbol	**US Subclass/CPC Group**	**Date**	**Examiner**
348	114	04/23/2020	AW
G05D	1/0246, 0016, 0033, 0038, 0206, 0253; 2201/0203	04/23/2020	AW
H04N	5/23203; 7/18; 2005/2255	04/23/2020	AW
E04H	4/1654	04/23/2020	AW
G06T	7/90, 001; 2207/10024	04/23/2020	AW
B08B	9/08, 46	04/23/2020	AW

/ALLEN C WONG/ Primary Examiner, Art Unit 2488	

WYBOTICS EX1009
Wybotics v. Zodiac
Page 168

Issue Classification	Application/Control No.	Applicant(s)/Patent Under Reexamination
	16/416,840	Durvasula et al.
	Examiner	**Art Unit**
	ALLEN C WONG	2488

CPC						
Symbol					**Type**	**Version**
G05D	/	1	/	0246	F	2013-01-01
H04N	/	7	/	18	I	2013-01-01
H04N	/	5	/	23203	I	2013-01-01
E04H	/	4	/	1654	I	2013-01-01
G05D	/	1	/	0016	I	2013-01-01
G05D	/	1	/	0033	I	2013-01-01
G05D	/	1	/	0038	I	2013-01-01
H04N	/	2005	/	2255	A	2013-01-01
G06T	/	7	/	90	A	2017-01-01
G05D	/	2201	/	0203	A	2013-01-01
G06T	/	7	/	001	A	2013-01-01
G06T	/	2207	/	10024	A	2013-01-01

CPC Combination Sets								
Symbol					**Type**	**Set**	**Ranking**	**Version**
	/		/					

NONE (Assistant Examiner)	(Date)	**Total Claims Allowed:** 6	
/ALLEN C WONG/ Primary Examiner, Art Unit 2488 (Primary Examiner)	24 April 2020 (Date)	O.G. Print Claim(s) 1	O.G. Print Figure 9

U.S. Patent and Trademark Office

Part of Paper No.: 20200423

WYBOTICS EX1009
Wybotics v. Zodiac
Page 169

Issue Classification	Application/Control No.	Applicant(s)/Patent Under Reexamination
	16/416,840	Durvasula et al.
	Examiner	**Art Unit**
	ALLEN C WONG	2488

INTERNATIONAL CLASSIFICATION				
CLAIMED				
G05D	/	1	/	02

NON-CLAIMED				
	/		/	

US ORIGINAL CLASSIFICATION	
CLASS	**SUBCLASS**
348	114

CROSS REFERENCES(S)						
CLASS	**SUBCLASS (ONE SUBCLASS PER BLOCK)**					

NONE (Assistant Examiner)	(Date)	**Total Claims Allowed:** 6	
/ALLEN C WONG/ Primary Examiner, Art Unit 2488 (Primary Examiner)	24 April 2020 (Date)	O.G. Print Claim(s) 1	O.G. Print Figure 9

U.S. Patent and Trademark Office

Part of Paper No.: 20200423

WYBOTICS EX1009
Wybotics v. Zodiac
Page 170

Issue Classification	Application/Control No.	Applicant(s)/Patent Under Reexamination
	16/416,840	Durvasula et al.
	Examiner	**Art Unit**
	ALLEN C WONG	2488

☐ Claims renumbered in the same order as presented by applicant ☐ CPA ☑ T.D. ☐ R.1.47

CLAIMS

Final	Original	Final	Original	Final	Original	Final	Original	Final	Original	Final	Original	Final	Original	Final	Original
	1		10		19										
	2		11	1	20										
	3		12	2	21										
	4		13	3	22										
	5		14	4	23										
	6		15	5	24										
	7		16	6	25										
	8		17												
	9		18												

NONE (Assistant Examiner)	(Date)	**Total Claims Allowed:** 6	
/ALLEN C WONG/ Primary Examiner, Art Unit 2488 (Primary Examiner)	24 April 2020 (Date)	O.G. Print Claim(s) 1	O.G. Print Figure 9

U.S. Patent and Trademark Office

Part of Paper No.: 20200423

WYBOTICS EX1009
Wybotics v. Zodiac
Page 171

Index of Claims	Application/Control No.	Applicant(s)/Patent Under Reexamination
	16/416,840	Durvasula et al.
	Examiner	**Art Unit**
	ALLEN C WONG	2488

✓	Rejected	-	Cancelled	N	Non-Elected	A	Appeal
=	Allowed	÷	Restricted	I	Interference	O	Objected

CLAIMS

☐ Claims renumbered in the same order as presented by applicant ☐ CPA ☑ T.D. ☐ R.1.47

CLAIM		DATE								
Final	Original	01/09/2020	02/25/2020	04/24/2020						
	1	-	-	-						
	2	-	-	-						
	3	-	-	-						
	4	-	-	-						
	5	-	-	-						
	6	-	-	-						
	7	-	-	-						
	8	-	-	-						
	9	-	-	-						
	10	-	-	-						
	11	-	-	-						
	12	-	-	-						
	13	-	-	-						
	14	-	-	-						
	15	-	-	-						
	16	-	-	-						
	17	-	-	-						
	18	-	-	-						
	19	-	-	-						
1	20	✓	✓	=						
2	21			=						
3	22			=						
4	23			=						
5	24			=						
6	25			=						

EAST Search History

EAST Search History (Prior Art)

Ref #	Hits	Search Query	DBs	Default Operator	Plurals	Time Stamp
L1	92	pool near4 clean$3 with (clean or cleanness or neatness or cleanliness) near4 (characteristic$1 or threshold$1 or value$1 or number$1)	US-PGPUB; USPAT; USOCR; FPRS; EPO; JPO; DERWENT	OR	OFF	2020/04/23 22:55
L2	105	pool near4 clean$3 same (clean or cleanness or neatness or cleanliness) near4 (characteristic$1 or threshold$1 or value$1 or number$1)	US-PGPUB; USPAT; USOCR; FPRS; EPO; JPO; DERWENT	OR	OFF	2020/04/23 22:56
L3	232	pool near4 clean$3 and (clean or cleanness or neatness or cleanliness) near4 (characteristic$1 or threshold$1 or value$1 or number$1)	US-PGPUB; USPAT; USOCR; FPRS; EPO; JPO; DERWENT	OR	OFF	2020/04/23 22:56

L4	143	pool with (clean or cleanness or neatness or cleanliness) near4 (characteristic$1 or threshold$1 or value$1 or number$1)	US-PGPUB; USPAT; USOCR; FPRS; EPO; JPO; DERWENT	OR	OFF	2020/04/23 22:56
L6	54	pool with (clean or cleanness or neatness or cleanliness) near4 (characteristic$1 or threshold$1 or value$1 or number$1) with (water or underwater)	US-PGPUB; USPAT; USOCR; FPRS; EPO; JPO; DERWENT	OR	OFF	2020/04/23 22:56
L7	44	(pool or water or underwater) near4 (image or picture) with compar$3 with threshold$1	US-PGPUB; USPAT; USOCR; FPRS; EPO; JPO; DERWENT	OR	OFF	2020/04/23 22:57
L8	0	predefined near4 threshold with (movement or mov$3) near4 ((vehicle adj body) or vehicle) with control$4 with (camera or imager)	US-PGPUB; USPAT; USOCR; FPRS; EPO; JPO; DERWENT	OR	OFF	2020/04/23 22:59

L10	7	(captur$3 near4 (image or picture or frame)) with threshold with (movement or mov$3) near4 ((vehicle adj body) or vehicle) with control$4 with (camera or imager)	US-PGPUB; USPAT; USOCR; FPRS; EPO; JPO; DERWENT	OR	OFF	2020/04/23 23:00
L11	0	(captur$3 near4 (image or picture or frame)) with threshold with (movement or mov$3) near4 ((vehicle adj body) or vehicle) with control$4 with (camera or imager) with (pool or (swimming near2 pool))	US-PGPUB; USPAT; USOCR; FPRS; EPO; JPO; DERWENT	OR	OFF	2020/04/23 23:01
L12	0	(captur$3 near4 (image or picture or frame)) with threshold with (movement or mov$3) near4 ((vehicle adj body) or vehicle) with control$4 with (camera or imager) same (pool or (swimming near2 pool))	US-PGPUB; USPAT; USOCR; FPRS; EPO; JPO; DERWENT	OR	OFF	2020/04/23 23:01
L13	0	(captur$3 near4 (image or picture or frame)) with threshold with (movement or mov$3) near4 ((vehicle adj body) or vehicle) with control$4 with (camera or imager) and (pool or (swimming near2 pool))	US-PGPUB; USPAT; USOCR; FPRS; EPO; JPO; DERWENT	OR	OFF	2020/04/23 23:01

S1	48	durvasula-kameshwar.in.	US-PGPUB; USPAT; USOCR; FPRS; EPO; JPO; DERWENT	OR	OFF	2020/01/09 11:00
S2	33	correa-william-londono.in.	US-PGPUB; USPAT; USOCR; FPRS; EPO; JPO; DERWENT	OR	OFF	2020/01/09 11:01
S3	80	(aqua adj products).as.	US-PGPUB; USPAT; USOCR; FPRS; EPO; JPO; DERWENT	OR	OFF	2020/01/09 11:01
S4	11008	G05D1/0246.cpc.	US-PGPUB; USPAT; USOCR; FPRS; EPO; JPO; DERWENT	OR	OFF	2020/01/09 11:05

S5	4066	G05D1/0016.cpc.	US-PGPUB; USPAT; USOCR; FPRS; EPO; JPO; DERWENT	OR	OFF	2020/01/09 11:05
S6	1765	G05D1/0033.cpc.	US-PGPUB; USPAT; USOCR; FPRS; EPO; JPO; DERWENT	OR	OFF	2020/01/09 11:05
S7	3222	G05D1/0038.cpc.	US-PGPUB; USPAT; USOCR; FPRS; EPO; JPO; DERWENT	OR	OFF	2020/01/09 11:05
S8	3378	G05D1/0206.cpc.	US-PGPUB; USPAT; USOCR; FPRS; EPO; JPO; DERWENT	OR	OFF	2020/01/09 11:05

S9	1049	G05D1/0253.cpc.	US-PGPUB; USPAT; USOCR; FPRS; EPO; JPO; DERWENT	OR	OFF	2020/01/09 11:05
S10	6090	G05D2201/0203.cpc.	US-PGPUB; USPAT; USOCR; FPRS; EPO; JPO; DERWENT	OR	OFF	2020/01/09 11:06
S11	11493	H04N5/23203.cpc.	US-PGPUB; USPAT; USOCR; FPRS; EPO; JPO; DERWENT	OR	OFF	2020/01/09 11:06
S12	31744	H04N7/18.cpc.	US-PGPUB; USPAT; USOCR; FPRS; EPO; JPO; DERWENT	OR	OFF	2020/01/09 11:06

S13	12150	H04N2005/2255.cpc.	US-PGPUB; USPAT; USOCR; FPRS; EPO; JPO; DERWENT	OR	OFF	2020/01/09 11:07
S14	3878	E04H4/1654.cpc.	US-PGPUB; USPAT; USOCR; FPRS; EPO; JPO; DERWENT	OR	OFF	2020/01/09 11:07
S15	15614	G06T7/90.cpc.	US-PGPUB; USPAT; USOCR; FPRS; EPO; JPO; DERWENT	OR	OFF	2020/01/09 11:08
S16	13415	G06T7/001.cpc.	US-PGPUB; USPAT; USOCR; FPRS; EPO; JPO; DERWENT	OR	OFF	2020/01/09 11:08

S17	30819	G06T2207/10024.cpc.	US-PGPUB; USPAT; USOCR; FPRS; EPO; JPO; DERWENT	OR	OFF	2020/01/09 11:08
S18	4342	B08B9/08.cpc.	US-PGPUB; USPAT; USOCR; FPRS; EPO; JPO; DERWENT	OR	OFF	2020/01/09 11:08
S19	604	B08B9/46.cpc.	US-PGPUB; USPAT; USOCR; FPRS; EPO; JPO; DERWENT	OR	OFF	2020/01/09 11:08
S20	230	348/114.ccls.	US-PGPUB; USPAT; USOCR; FPRS; EPO; JPO; DERWENT	OR	OFF	2020/01/09 11:09

S21	14	pool near2 clean$3 with camera$1 with motor$3	US-PGPUB; USPAT; USOCR; FPRS; EPO; JPO; DERWENT	OR	OFF	2020/01/09 11:09
S22	106	pool near2 clean$3 with camera$1	US-PGPUB; USPAT; USOCR; FPRS; EPO; JPO; DERWENT	OR	OFF	2020/01/09 11:09
S23	141	pool near2 clean$3 same camera$1	US-PGPUB; USPAT; USOCR; FPRS; EPO; JPO; DERWENT	OR	OFF	2020/01/09 11:10
S24	2409	pool near2 clean$3 with (processor$1 or control$4)	US-PGPUB; USPAT; USOCR; FPRS; EPO; JPO; DERWENT	OR	OFF	2020/01/09 11:10

S25	25	S24 and S1	US-PGPUB; USPAT; USOCR; FPRS; EPO; JPO; DERWENT	OR	OFF	2020/01/09 11:10
S26	14	S24 and S2	US-PGPUB; USPAT; USOCR; FPRS; EPO; JPO; DERWENT	OR	OFF	2020/01/09 11:10
S27	53	S24 and S3	US-PGPUB; USPAT; USOCR; FPRS; EPO; JPO; DERWENT	OR	OFF	2020/01/09 11:10
S28	16	S24 and S4	US-PGPUB; USPAT; USOCR; FPRS; EPO; JPO; DERWENT	OR	OFF	2020/01/09 11:10

S29	22	S24 and S5	US-PGPUB; USPAT; USOCR; FPRS; EPO; JPO; DERWENT	OR	OFF	2020/01/09 11:10
S30	16	S24 and S6	US-PGPUB; USPAT; USOCR; FPRS; EPO; JPO; DERWENT	OR	OFF	2020/01/09 11:11
S31	17	S24 and S7	US-PGPUB; USPAT; USOCR; FPRS; EPO; JPO; DERWENT	OR	OFF	2020/01/09 11:11
S32	20	S24 and S8	US-PGPUB; USPAT; USOCR; FPRS; EPO; JPO; DERWENT	OR	OFF	2020/01/09 11:11

S33	0	S24 and S9	US-PGPUB; USPAT; USOCR; FPRS; EPO; JPO; DERWENT	OR	OFF	2020/01/09 11:11
S34	63	S24 and S10	US-PGPUB; USPAT; USOCR; FPRS; EPO; JPO; DERWENT	OR	OFF	2020/01/09 11:11
S35	14	S24 and S11	US-PGPUB; USPAT; USOCR; FPRS; EPO; JPO; DERWENT	OR	OFF	2020/01/09 11:11
S36	15	S24 and S12	US-PGPUB; USPAT; USOCR; FPRS; EPO; JPO; DERWENT	OR	OFF	2020/01/09 11:11

S37	13	S24 and S13	US-PGPUB; USPAT; USOCR; FPRS; EPO; JPO; DERWENT	OR	OFF	2020/01/09 11:11
S38	707	S24 and S14	US-PGPUB; USPAT; USOCR; FPRS; EPO; JPO; DERWENT	OR	OFF	2020/01/09 11:11
S39	14	S24 and S15	US-PGPUB; USPAT; USOCR; FPRS; EPO; JPO; DERWENT	OR	OFF	2020/01/09 11:11
S40	13	S24 and S16	US-PGPUB; USPAT; USOCR; FPRS; EPO; JPO; DERWENT	OR	OFF	2020/01/09 11:11

S41	13	S24 and S17	US-PGPUB; USPAT; USOCR; FPRS; EPO; JPO; DERWENT	OR	OFF	2020/01/09 11:11
S42	14	S24 and S18	US-PGPUB; USPAT; USOCR; FPRS; EPO; JPO; DERWENT	OR	OFF	2020/01/09 11:11
S43	0	S24 and S19	US-PGPUB; USPAT; USOCR; FPRS; EPO; JPO; DERWENT	OR	OFF	2020/01/09 11:11
S44	3	S24 and S20	US-PGPUB; USPAT; USOCR; FPRS; EPO; JPO; DERWENT	OR	OFF	2020/01/09 11:11

S45	2	"20130152970".pn.	US-PGPUB; USPAT; USOCR; FPRS; EPO; JPO; DERWENT	OR	OFF	2020/01/09 11:11
S46	76	("5205174" "5435031" "5507058" "5613261" "5886630" "7123746" "7362351" "7398138" "7993600" "8007653" "8043070" "9388595" "9995051" "10338599" "20020097322" "20040025268" "20040040581" "20070094817" "20100299016" "20110091329" "20110290707" "20110301752" "20130151061" "20130269097" "20140009748").pn.	US-PGPUB; USPAT; USOCR; FPRS; EPO; JPO; DERWENT	OR	OFF	2020/01/09 11:16
S47	19	pool near2 clean$3 same camera$1 same (control$4 or processor$1) same filter$3	US-PGPUB; USPAT; USOCR; FPRS; EPO; JPO; DERWENT	OR	OFF	2020/01/09 13:10
S48	30	pool near4 clean$3 with camera with (processor or controller or CPU)	US-PGPUB; USPAT; USOCR;	OR	OFF	2020/01/09 15:27

			FPRS; EPO; JPO; DERWENT			
S49	793	pool near4 clean$3 with (processor or controller or CPU)	US-PGPUB; USPAT; USOCR; FPRS; EPO; JPO; DERWENT	OR	OFF	2020/01/09 15:27
S50	57	pool near4 clean$3 same camera same (processor or controller or CPU)	US-PGPUB; USPAT; USOCR; FPRS; EPO; JPO; DERWENT	OR	OFF	2020/01/09 15:28
S51	176	pool near4 clean$3 and camera same (processor or controller or CPU)	US-PGPUB; USPAT; USOCR; FPRS; EPO; JPO; DERWENT	OR	OFF	2020/01/09 15:28
S52	19	pool near4 clean$3 and camera same (processor or controller or CPU) with motor	US-PGPUB; USPAT; USOCR;	OR	OFF	2020/01/09 15:28

			FPRS; EPO; JPO; DERWENT			
S53	29	pool near4 clean$3 and camera same (processor or controller or CPU) same motor	US-PGPUB; USPAT; USOCR; FPRS; EPO; JPO; DERWENT	OR	OFF	2020/01/09 15:28
S54	2	(reclean$3 or re-clean$3) near8 pool$1 with motor	US-PGPUB; USPAT; USOCR; FPRS; EPO; JPO; DERWENT	OR	OFF	2020/01/09 15:28
S55	2	(reclean$3 or re-clean$3) near8 pool$1 same motor	US-PGPUB; USPAT; USOCR; FPRS; EPO; JPO; DERWENT	OR	OFF	2020/01/09 15:28
S56	8	(reclean$3 or re-clean$3) near8 pool$1 same (processor$1 or controller or CPU)	US-PGPUB; USPAT; USOCR;	OR	OFF	2020/01/09 15:28

			FPRS; EPO; JPO; DERWENT			
S57	8	(reclean$3 or re-clean$3) near8 pool$1 with (processor$1 or controller or CPU)	US-PGPUB; USPAT; USOCR; FPRS; EPO; JPO; DERWENT	OR	OFF	2020/01/09 15:29
S58	85	pool near4 clean$3 and camera same (processor or controller or CPU) same (display$3 or monitor$$4)	US-PGPUB; USPAT; USOCR; FPRS; EPO; JPO; DERWENT	OR	OFF	2020/01/09 15:34
S59	7	pool near4 clean$3 with cleanliness near2 (threshold$1 or value$1)	US-PGPUB; USPAT; USOCR; FPRS; EPO; JPO; DERWENT	OR	OFF	2020/01/09 15:34
S60	19	pool near4 clean$3 with (clean or cleanness or neatness or cleanliness) near2 (threshold$1 or value$1)	US-PGPUB; USPAT; USOCR;	OR	OFF	2020/01/09 15:35

			FPRS; EPO; JPO; DERWENT			
S61	22	pool near4 clean$3 same (clean or cleanness or neatness or cleanliness) near2 (threshold$1 or value$1)	US-PGPUB; USPAT; USOCR; FPRS; EPO; JPO; DERWENT	OR	OFF	2020/01/09 15:35
S62	51	pool near4 clean$3 and (clean or cleanness or neatness or cleanliness) near2 (threshold$1 or value$1)	US-PGPUB; USPAT; USOCR; FPRS; EPO; JPO; DERWENT	OR	OFF	2020/01/09 15:35
S63	90	pool near4 clean$3 with (clean or cleanness or neatness or cleanliness) near4 (characteristic$1 or threshold$1 or value$1 or number$1)	US-PGPUB; USPAT; USOCR; FPRS; EPO; JPO; DERWENT	OR	OFF	2020/01/09 15:35
S64	103	pool near4 clean$3 same (clean or cleanness or neatness or cleanliness)	US-PGPUB; USPAT; USOCR;	OR	OFF	2020/01/09 15:35

		near4 (characteristic$1 or threshold$1 or value$1 or number$1)	FPRS; EPO; JPO; DERWENT			
S65	229	pool near4 clean$3 and (clean or cleanness or neatness or cleanliness) near4 (characteristic$1 or threshold$1 or value$1 or number$1)	US-PGPUB; USPAT; USOCR; FPRS; EPO; JPO; DERWENT	OR	OFF	2020/01/09 15:36
S66	140	pool with (clean or cleanness or neatness or cleanliness) near4 (characteristic$1 or threshold$1 or value$1 or number$1)	US-PGPUB; USPAT; USOCR; FPRS; EPO; JPO; DERWENT	OR	OFF	2020/01/09 15:36
S67	53	pool with (clean or cleanness or neatness or cleanliness) near4 (characteristic$1 or threshold$1 or value$1 or number$1) with water	US-PGPUB; USPAT; USOCR; FPRS; EPO; JPO; DERWENT	OR	OFF	2020/01/09 15:36
S68	53	pool with (clean or cleanness or neatness or cleanliness) near4 (characteristic$1 or	US-PGPUB; USPAT; USOCR;	OR	OFF	2020/01/09 15:37

		threshold$1 or value$1 or number$1) with (water or underwater)	FPRS; EPO; JPO; DERWENT			
S69	40	(pool or water or underwater) near4 (image or picture) with compar$3 with threshold$1	US-PGPUB; USPAT; USOCR; FPRS; EPO; JPO; DERWENT	OR	OFF	2020/01/09 15:37
S70	48	durvasula-kameshwar.in.	US-PGPUB; USPAT; USOCR; FPRS; EPO; JPO; DERWENT	OR	OFF	2020/01/09 19:00
S71	20	pool near2 clean$3 same camera$1 same (control$4 or processor$1) same filter$3	US-PGPUB; USPAT; USOCR; FPRS; EPO; JPO; DERWENT	OR	OFF	2020/02/25 11:28
S72	30	pool near4 clean$3 with camera with (processor or controller or CPU)	US-PGPUB; USPAT; USOCR;	OR	OFF	2020/02/25 11:28

			FPRS; EPO; JPO; DERWENT			
S73	20	pool near4 clean$3 and camera same (processor or controller or CPU) with motor	US-PGPUB; USPAT; USOCR; FPRS; EPO; JPO; DERWENT	OR	OFF	2020/02/25 11:28
S74	30	pool near4 clean$3 and camera same (processor or controller or CPU) same motor	US-PGPUB; USPAT; USOCR; FPRS; EPO; JPO; DERWENT	OR	OFF	2020/02/25 11:28
S75	2	(reclean$3 or re-clean$3) near8 pool$1 with motor	US-PGPUB; USPAT; USOCR; FPRS; EPO; JPO; DERWENT	OR	OFF	2020/02/25 11:29
S76	2	(reclean$3 or re-clean$3) near8 pool$1 same motor	US-PGPUB; USPAT; USOCR;	OR	OFF	2020/02/25 11:29

			FPRS; EPO; JPO; DERWENT			
S77	8	(reclean$3 or re-clean$3) near8 pool$1 same (processor$1 or controller or CPU)	US-PGPUB; USPAT; USOCR; FPRS; EPO; JPO; DERWENT	OR	OFF	2020/02/25 11:29
S78	8	(reclean$3 or re-clean$3) near8 pool$1 with (processor$1 or controller or CPU)	US-PGPUB; USPAT; USOCR; FPRS; EPO; JPO; DERWENT	OR	OFF	2020/02/25 11:30
S79	91	pool near4 clean$3 and camera same (processor or controller or CPU) same (display$3 or monitor$$4)	US-PGPUB; USPAT; USOCR; FPRS; EPO; JPO; DERWENT	OR	OFF	2020/02/25 11:30
S80	7	pool near4 clean$3 with cleanliness near2 (threshold$1 or value$1)	US-PGPUB; USPAT; USOCR;	OR	OFF	2020/02/25 11:30

			FPRS; EPO; JPO; DERWENT			
S81	20	pool near4 clean$3 with (clean or cleanness or neatness or cleanliness) near2 (threshold$1 or value$1)	US-PGPUB; USPAT; USOCR; FPRS; EPO; JPO; DERWENT	OR	OFF	2020/02/25 11:37
S82	231	pool near4 clean$3 and (clean or cleanness or neatness or cleanliness) near4 (characteristic$1 or threshold$1 or value$1 or number$1)	US-PGPUB; USPAT; USOCR; FPRS; EPO; JPO; DERWENT	OR	OFF	2020/02/25 11:37
S83	49	durvasula-kameshwar.in.	US-PGPUB; USPAT; USOCR; FPRS; EPO; JPO; DERWENT	OR	OFF	2020/02/25 11:38
S84	10	S82 and S83	US-PGPUB; USPAT; USOCR;	OR	OFF	2020/02/25 11:38

			FPRS; EPO; JPO; DERWENT			
S85	33	correa-william-londono.in.	US-PGPUB; USPAT; USOCR; FPRS; EPO; JPO; DERWENT	OR	OFF	2020/02/25 11:38
S86	8	S82 and S85	US-PGPUB; USPAT; USOCR; FPRS; EPO; JPO; DERWENT	OR	OFF	2020/02/25 11:38
S87	83	(aqua adj products).as.	US-PGPUB; USPAT; USOCR; FPRS; EPO; JPO; DERWENT	OR	OFF	2020/02/25 11:38
S88	5	S82 and S87	US-PGPUB; USPAT; USOCR;	OR	OFF	2020/02/25 11:38

			FPRS; EPO; JPO; DERWENT			
S89	11404	G05D1/0246.cpc.	US-PGPUB; USPAT; USOCR; FPRS; EPO; JPO; DERWENT	OR	OFF	2020/02/25 11:38
S90	12	S82 and S89	US-PGPUB; USPAT; USOCR; FPRS; EPO; JPO; DERWENT	OR	OFF	2020/02/25 11:38
S91	4213	G05D1/0016.cpc.	US-PGPUB; USPAT; USOCR; FPRS; EPO; JPO; DERWENT	OR	OFF	2020/02/25 11:38
S92	12	S82 and S91	US-PGPUB; USPAT; USOCR;	OR	OFF	2020/02/25 11:38

			FPRS; EPO; JPO; DERWENT			
S93	1819	G05D1/0033.cpc.	US-PGPUB; USPAT; USOCR; FPRS; EPO; JPO; DERWENT	OR	OFF	2020/02/25 11:38
S94	12	S82 and S93	US-PGPUB; USPAT; USOCR; FPRS; EPO; JPO; DERWENT	OR	OFF	2020/02/25 11:38
S95	3356	G05D1/0038.cpc.	US-PGPUB; USPAT; USOCR; FPRS; EPO; JPO; DERWENT	OR	OFF	2020/02/25 11:38
S96	12	S82 and S95	US-PGPUB; USPAT; USOCR;	OR	OFF	2020/02/25 11:38

			FPRS; EPO; JPO; DERWENT			
S97	3476	G05D1/0206.cpc.	US-PGPUB; USPAT; USOCR; FPRS; EPO; JPO; DERWENT	OR	OFF	2020/02/25 11:38
S98	0	S82 and S97	US-PGPUB; USPAT; USOCR; FPRS; EPO; JPO; DERWENT	OR	OFF	2020/02/25 11:38
S99	1076	G05D1/0253.cpc.	US-PGPUB; USPAT; USOCR; FPRS; EPO; JPO; DERWENT	OR	OFF	2020/02/25 11:38
S100	0	S82 and S99	US-PGPUB; USPAT; USOCR;	OR	OFF	2020/02/25 11:38

			FPRS; EPO; JPO; DERWENT			
S101	6288	G05D2201/0203.cpc.	US-PGPUB; USPAT; USOCR; FPRS; EPO; JPO; DERWENT	OR	OFF	2020/02/25 11:38
S102	12	S82 and S101	US-PGPUB; USPAT; USOCR; FPRS; EPO; JPO; DERWENT	OR	OFF	2020/02/25 11:38
S103	11774	H04N5/23203.cpc.	US-PGPUB; USPAT; USOCR; FPRS; EPO; JPO; DERWENT	OR	OFF	2020/02/25 11:38
S104	12	S82 and S103	US-PGPUB; USPAT; USOCR;	OR	OFF	2020/02/25 11:38

			FPRS; EPO; JPO; DERWENT			
S105	32723	H04N7/18.cpc.	US-PGPUB; USPAT; USOCR; FPRS; EPO; JPO; DERWENT	OR	OFF	2020/02/25 11:38
S106	12	S82 and S105	US-PGPUB; USPAT; USOCR; FPRS; EPO; JPO; DERWENT	OR	OFF	2020/02/25 11:38
S107	12466	H04N2005/2255.cpc.	US-PGPUB; USPAT; USOCR; FPRS; EPO; JPO; DERWENT	OR	OFF	2020/02/25 11:38
S108	12	S82 and S107	US-PGPUB; USPAT; USOCR;	OR	OFF	2020/02/25 11:38

			FPRS; EPO; JPO; DERWENT			
S109	3947	E04H4/1654.cpc.	US-PGPUB; USPAT; USOCR; FPRS; EPO; JPO; DERWENT	OR	OFF	2020/02/25 11:38
S110	16	S82 and S109	US-PGPUB; USPAT; USOCR; FPRS; EPO; JPO; DERWENT	OR	OFF	2020/02/25 11:38
S111	16120	G06T7/90.cpc.	US-PGPUB; USPAT; USOCR; FPRS; EPO; JPO; DERWENT	OR	OFF	2020/02/25 11:38
S112	12	S82 and S111	US-PGPUB; USPAT; USOCR;	OR	OFF	2020/02/25 11:38

			FPRS; EPO; JPO; DERWENT			
S113	13847	G06T7/001.cpc.	US-PGPUB; USPAT; USOCR; FPRS; EPO; JPO; DERWENT	OR	OFF	2020/02/25 11:38
S114	12	S82 and S113	US-PGPUB; USPAT; USOCR; FPRS; EPO; JPO; DERWENT	OR	OFF	2020/02/25 11:38
S115	31831	G06T2207/10024.cpc.	US-PGPUB; USPAT; USOCR; FPRS; EPO; JPO; DERWENT	OR	OFF	2020/02/25 11:38
S116	12	S82 and S115	US-PGPUB; USPAT; USOCR;	OR	OFF	2020/02/25 11:38

			FPRS; EPO; JPO; DERWENT			
S117	4461	B08B9/08.cpc.	US-PGPUB; USPAT; USOCR; FPRS; EPO; JPO; DERWENT	OR	OFF	2020/02/25 11:38
S118	0	S82 and S117	US-PGPUB; USPAT; USOCR; FPRS; EPO; JPO; DERWENT	OR	OFF	2020/02/25 11:38
S119	619	B08B9/46.cpc.	US-PGPUB; USPAT; USOCR; FPRS; EPO; JPO; DERWENT	OR	OFF	2020/02/25 11:38
S120	0	S82 and S119	US-PGPUB; USPAT; USOCR;	OR	OFF	2020/02/25 11:38

			FPRS; EPO; JPO; DERWENT			
S121	228	348/114.ccls.	US-PGPUB; USPAT; USOCR; FPRS; EPO; JPO; DERWENT	OR	OFF	2020/02/25 11:38
S122	2	S82 and S121	US-PGPUB; USPAT; USOCR; FPRS; EPO; JPO; DERWENT	OR	OFF	2020/02/25 11:38
S123	54	pool with (clean or cleanness or neatness or cleanliness) near4 (characteristic$1 or threshold$1 or value$1 or number$1) with water	US-PGPUB; USPAT; USOCR; FPRS; EPO; JPO; DERWENT	OR	OFF	2020/02/25 11:38
S124	42	(pool or water or underwater) near4 (image or picture) with compar$3 with threshold$1	US-PGPUB; USPAT; USOCR;	OR	OFF	2020/02/25 11:39

			FPRS; EPO; JPO; DERWENT			
S125	92	vehicle near2 (body or housing) with clean$3 near2 pool	US-PGPUB; USPAT; USOCR; FPRS; EPO; JPO; DERWENT	OR	OFF	2020/02/25 11:39
S126	14	pool near2 clean$3 with camera$1 with motor$3	US-PGPUB; USPAT; USOCR; FPRS; EPO; JPO; DERWENT	OR	OFF	2020/04/23 12:17
S127	111	pool near2 clean$3 with camera$1	US-PGPUB; USPAT; USOCR; FPRS; EPO; JPO; DERWENT	OR	OFF	2020/04/23 12:17
S128	147	pool near2 clean$3 same camera$1	US-PGPUB; USPAT; USOCR;	OR	OFF	2020/04/23 12:17

			FPRS; EPO; JPO; DERWENT			
S129	2510	pool near2 clean$3 with (processor$1 or control$4)	US-PGPUB; USPAT; USOCR; FPRS; EPO; JPO; DERWENT	OR	OFF	2020/04/23 12:17
S130	20	pool near2 clean$3 same camera$1 same (control$4 or processor$1) same filter$3	US-PGPUB; USPAT; USOCR; FPRS; EPO; JPO; DERWENT	OR	OFF	2020/04/23 12:17
S131	30	pool near4 clean$3 with camera with (processor or controller or CPU)	US-PGPUB; USPAT; USOCR; FPRS; EPO; JPO; DERWENT	OR	OFF	2020/04/23 12:18
S132	826	pool near4 clean$3 with (processor or controller or CPU)	US-PGPUB; USPAT; USOCR;	OR	OFF	2020/04/23 12:18

			FPRS; EPO; JPO; DERWENT			
S133	59	pool near4 clean$3 same camera same (processor or controller or CPU)	US-PGPUB; USPAT; USOCR; FPRS; EPO; JPO; DERWENT	OR	OFF	2020/04/23 12:18
S135	234	pool near4 clean$3 with (processor or controller or CPU) with motor	US-PGPUB; USPAT; USOCR; FPRS; EPO; JPO; DERWENT	OR	OFF	2020/04/23 12:19
S136	275	pool near4 clean$3 with (processor or controller or CPU) same motor	US-PGPUB; USPAT; USOCR; FPRS; EPO; JPO; DERWENT	OR	OFF	2020/04/23 12:19
S137	50	durvasula-kameshwar.in.	US-PGPUB; USPAT; USOCR;	OR	OFF	2020/04/23 12:19

			FPRS; EPO; JPO; DERWENT			
S138	27	S129 and S137	US-PGPUB; USPAT; USOCR; FPRS; EPO; JPO; DERWENT	OR	OFF	2020/04/23 12:19
S139	34	correa-william-londono.in.	US-PGPUB; USPAT; USOCR; FPRS; EPO; JPO; DERWENT	OR	OFF	2020/04/23 12:19
S140	14	S129 and S139	US-PGPUB; USPAT; USOCR; FPRS; EPO; JPO; DERWENT	OR	OFF	2020/04/23 12:19
S141	85	(aqua adj products).as.	US-PGPUB; USPAT; USOCR;	OR	OFF	2020/04/23 12:19

			FPRS; EPO; JPO; DERWENT			
S142	57	S129 and S141	US-PGPUB; USPAT; USOCR; FPRS; EPO; JPO; DERWENT	OR	OFF	2020/04/23 12:19
S143	11894	G05D1/0246.cpc.	US-PGPUB; USPAT; USOCR; FPRS; EPO; JPO; DERWENT	OR	OFF	2020/04/23 12:19
S144	17	S129 and S143	US-PGPUB; USPAT; USOCR; FPRS; EPO; JPO; DERWENT	OR	OFF	2020/04/23 12:19
S145	4392	G05D1/0016.cpc.	US-PGPUB; USPAT; USOCR;	OR	OFF	2020/04/23 12:19

			FPRS; EPO; JPO; DERWENT			
S146	25	S129 and S145	US-PGPUB; USPAT; USOCR; FPRS; EPO; JPO; DERWENT	OR	OFF	2020/04/23 12:19
S147	1892	G05D1/0033.cpc.	US-PGPUB; USPAT; USOCR; FPRS; EPO; JPO; DERWENT	OR	OFF	2020/04/23 12:19
S148	19	S129 and S147	US-PGPUB; USPAT; USOCR; FPRS; EPO; JPO; DERWENT	OR	OFF	2020/04/23 12:19
S149	3515	G05D1/0038.cpc.	US-PGPUB; USPAT; USOCR;	OR	OFF	2020/04/23 12:19

			FPRS; EPO; JPO; DERWENT			
S150	17	S129 and S149	US-PGPUB; USPAT; USOCR; FPRS; EPO; JPO; DERWENT	OR	OFF	2020/04/23 12:19
S151	3558	G05D1/0206.cpc.	US-PGPUB; USPAT; USOCR; FPRS; EPO; JPO; DERWENT	OR	OFF	2020/04/23 12:20
S152	22	S129 and S151	US-PGPUB; USPAT; USOCR; FPRS; EPO; JPO; DERWENT	OR	OFF	2020/04/23 12:20
S153	1129	G05D1/0253.cpc.	US-PGPUB; USPAT; USOCR;	OR	OFF	2020/04/23 12:20

			FPRS; EPO; JPO; DERWENT			
S154	0	S129 and S153	US-PGPUB; USPAT; USOCR; FPRS; EPO; JPO; DERWENT	OR	OFF	2020/04/23 12:20
S155	6589	G05D2201/0203.cpc.	US-PGPUB; USPAT; USOCR; FPRS; EPO; JPO; DERWENT	OR	OFF	2020/04/23 12:20
S156	70	S129 and S155	US-PGPUB; USPAT; USOCR; FPRS; EPO; JPO; DERWENT	OR	OFF	2020/04/23 12:20
S157	12087	H04N5/23203.cpc.	US-PGPUB; USPAT; USOCR;	OR	OFF	2020/04/23 12:20

			FPRS; EPO; JPO; DERWENT			
S158	14	S129 and S157	US-PGPUB; USPAT; USOCR; FPRS; EPO; JPO; DERWENT	OR	OFF	2020/04/23 12:20
S159	33782	H04N7/18.cpc.	US-PGPUB; USPAT; USOCR; FPRS; EPO; JPO; DERWENT	OR	OFF	2020/04/23 12:20
S160	15	S129 and S159	US-PGPUB; USPAT; USOCR; FPRS; EPO; JPO; DERWENT	OR	OFF	2020/04/23 12:20
S161	12824	H04N2005/2255.cpc.	US-PGPUB; USPAT; USOCR;	OR	OFF	2020/04/23 12:20

			FPRS; EPO; JPO; DERWENT			
S162	13	S129 and S161	US-PGPUB; USPAT; USOCR; FPRS; EPO; JPO; DERWENT	OR	OFF	2020/04/23 12:20
S163	4001	E04H4/1654.cpc.	US-PGPUB; USPAT; USOCR; FPRS; EPO; JPO; DERWENT	OR	OFF	2020/04/23 12:20
S164	735	S129 and S163	US-PGPUB; USPAT; USOCR; FPRS; EPO; JPO; DERWENT	OR	OFF	2020/04/23 12:20
S165	16709	G06T7/90.cpc.	US-PGPUB; USPAT; USOCR;	OR	OFF	2020/04/23 12:20

			FPRS; EPO; JPO; DERWENT			
S166	14	S129 and S165	US-PGPUB; USPAT; USOCR; FPRS; EPO; JPO; DERWENT	OR	OFF	2020/04/23 12:20
S167	14305	G06T7/001.cpc.	US-PGPUB; USPAT; USOCR; FPRS; EPO; JPO; DERWENT	OR	OFF	2020/04/23 12:20
S168	13	S129 and S167	US-PGPUB; USPAT; USOCR; FPRS; EPO; JPO; DERWENT	OR	OFF	2020/04/23 12:20
S169	32894	G06T2207/10024.cpc.	US-PGPUB; USPAT; USOCR;	OR	OFF	2020/04/23 12:20

			FPRS; EPO; JPO; DERWENT			
S170	13	S129 and S169	US-PGPUB; USPAT; USOCR; FPRS; EPO; JPO; DERWENT	OR	OFF	2020/04/23 12:20
S171	4529	B08B9/08.cpc.	US-PGPUB; USPAT; USOCR; FPRS; EPO; JPO; DERWENT	OR	OFF	2020/04/23 12:20
S172	14	S129 and S171	US-PGPUB; USPAT; USOCR; FPRS; EPO; JPO; DERWENT	OR	OFF	2020/04/23 12:20
S173	635	B08B9/46.cpc.	US-PGPUB; USPAT; USOCR;	OR	OFF	2020/04/23 12:20

			FPRS; EPO; JPO; DERWENT			
S174	0	S129 and S173	US-PGPUB; USPAT; USOCR; FPRS; EPO; JPO; DERWENT	OR	OFF	2020/04/23 12:20
S175	225	348/114.ccls.	US-PGPUB; USPAT; USOCR; FPRS; EPO; JPO; DERWENT	OR	OFF	2020/04/23 12:20
S176	2	S129 and S175	US-PGPUB; USPAT; USOCR; FPRS; EPO; JPO; DERWENT	OR	OFF	2020/04/23 12:20
S177	27	S132 and S137	US-PGPUB; USPAT; USOCR;	OR	OFF	2020/04/23 12:21

			FPRS; EPO; JPO; DERWENT			
S178	10	S132 and S139	US-PGPUB; USPAT; USOCR; FPRS; EPO; JPO; DERWENT	OR	OFF	2020/04/23 12:21
S179	41	S132 and S141	US-PGPUB; USPAT; USOCR; FPRS; EPO; JPO; DERWENT	OR	OFF	2020/04/23 12:21
S180	17	S132 and S143	US-PGPUB; USPAT; USOCR; FPRS; EPO; JPO; DERWENT	OR	OFF	2020/04/23 12:21
S181	21	S132 and S145	US-PGPUB; USPAT; USOCR;	OR	OFF	2020/04/23 12:21

			FPRS; EPO; JPO; DERWENT			
S182	19	S132 and S147	US-PGPUB; USPAT; USOCR; FPRS; EPO; JPO; DERWENT	OR	OFF	2020/04/23 12:21
S183	17	S132 and S149	US-PGPUB; USPAT; USOCR; FPRS; EPO; JPO; DERWENT	OR	OFF	2020/04/23 12:21
S184	17	S132 and S151	US-PGPUB; USPAT; USOCR; FPRS; EPO; JPO; DERWENT	OR	OFF	2020/04/23 12:21
S185	0	S132 and S153	US-PGPUB; USPAT; USOCR;	OR	OFF	2020/04/23 12:21

			FPRS; EPO; JPO; DERWENT			
S186	40	S132 and S155	US-PGPUB; USPAT; USOCR; FPRS; EPO; JPO; DERWENT	OR	OFF	2020/04/23 12:21
S187	14	S132 and S157	US-PGPUB; USPAT; USOCR; FPRS; EPO; JPO; DERWENT	OR	OFF	2020/04/23 12:21
S188	15	S132 and S159	US-PGPUB; USPAT; USOCR; FPRS; EPO; JPO; DERWENT	OR	OFF	2020/04/23 12:21
S189	13	S132 and S161	US-PGPUB; USPAT; USOCR;	OR	OFF	2020/04/23 12:21

			FPRS; EPO; JPO; DERWENT			
S190	343	S132 and S163	US-PGPUB; USPAT; USOCR; FPRS; EPO; JPO; DERWENT	OR	OFF	2020/04/23 12:21
S191	14	S132 and S165	US-PGPUB; USPAT; USOCR; FPRS; EPO; JPO; DERWENT	OR	OFF	2020/04/23 12:21
S192	13	S132 and S167	US-PGPUB; USPAT; USOCR; FPRS; EPO; JPO; DERWENT	OR	OFF	2020/04/23 12:21
S193	13	S132 and S169	US-PGPUB; USPAT; USOCR;	OR	OFF	2020/04/23 12:21

			FPRS; EPO; JPO; DERWENT			
S194	7	S132 and S171	US-PGPUB; USPAT; USOCR; FPRS; EPO; JPO; DERWENT	OR	OFF	2020/04/23 12:21
S195	0	S132 and S173	US-PGPUB; USPAT; USOCR; FPRS; EPO; JPO; DERWENT	OR	OFF	2020/04/23 12:21
S196	2	S132 and S175	US-PGPUB; USPAT; USOCR; FPRS; EPO; JPO; DERWENT	OR	OFF	2020/04/23 12:22
S197	2	(reclean$3 or re-clean$3) near8 pool$1 with motor	US-PGPUB; USPAT; USOCR;	OR	OFF	2020/04/23 12:35

			FPRS; EPO; JPO; DERWENT			
S198	2	(reclean$3 or re-clean$3) near8 pool$1 same motor	US-PGPUB; USPAT; USOCR; FPRS; EPO; JPO; DERWENT	OR	OFF	2020/04/23 12:36
S199	8	(reclean$3 or re-clean$3) near8 pool$1 same (processor$1 or controller or CPU)	US-PGPUB; USPAT; USOCR; FPRS; EPO; JPO; DERWENT	OR	OFF	2020/04/23 12:36
S200	8	(reclean$3 or re-clean$3) near8 pool$1 with (processor$1 or controller or CPU)	US-PGPUB; USPAT; USOCR; FPRS; EPO; JPO; DERWENT	OR	OFF	2020/04/23 12:36
S201	91	pool near4 clean$3 and camera same (processor or controller or CPU) same (display$3 or monitor$$4)	US-PGPUB; USPAT; USOCR;	OR	OFF	2020/04/23 12:36

			FPRS; EPO; JPO; DERWENT			
S202	7	pool near4 clean$3 with cleanliness near2 (threshold$1 or value$1)	US-PGPUB; USPAT; USOCR; FPRS; EPO; JPO; DERWENT	OR	OFF	2020/04/23 14:09
S203	20	pool near4 clean$3 with (clean or cleanness or neatness or cleanliness) near2 (threshold$1 or value$1)	US-PGPUB; USPAT; USOCR; FPRS; EPO; JPO; DERWENT	OR	OFF	2020/04/23 14:10
S204	23	pool near4 clean$3 same (clean or cleanness or neatness or cleanliness) near2 (threshold$1 or value$1)	US-PGPUB; USPAT; USOCR; FPRS; EPO; JPO; DERWENT	OR	OFF	2020/04/23 14:10
S205	52	pool near4 clean$3 and (clean or cleanness or neatness or cleanliness) near2 (threshold$1 or value$1)	US-PGPUB; USPAT; USOCR;	OR	OFF	2020/04/23 14:10

			FPRS; EPO; JPO; DERWENT			

EAST Search History (Interference)

Ref #	Hits	Search Query	DBs	Default Operator	Plurals	Time Stamp
L14	0	pool near4 clean$3 with filter$3 near8 (debris or trash) with surface$1 with (camera or imager) with (threshold$1 or limit$1) near8 (image or picture or frame) with (processor or controller or (control adj unit))	US-PGPUB; USPAT	OR	OFF	2020/04/23 23:07

4/23/2020 11:07:46 PM
C:\Users\awong1\Documents\EAST\Workspaces\16416840_042320.wsp

UNITED STATES PATENT AND TRADEMARK OFFICE

UNITED STATES DEPARTMENT OF COMMERCE
United States Patent and Trademark Office
Address: COMMISSIONER FOR PATENTS
P.O. Box 1450
Alexandria, Virginia 22313-1450
www.uspto.gov

BIB DATA SHEET

CONFIRMATION NO. 5789

SERIAL NUMBER	FILING or 371(c) DATE	CLASS	GROUP ART UNIT	ATTORNEY DOCKET NO.
16/416,840	05/20/2019 **RULE**	348	2488	105650-1141487

APPLICANTS
AQUA PRODUCTS, INC., Cedar Grove, NJ;

INVENTORS
Kameshwar Durvasula, Garfield, NJ;
William Londono Correa, Bloomfield, NJ;

**** CONTINUING DATA ***************************
This application is a CON of 15/973,983 05/08/2018 PAT 10338599
which is a CON of 15/207,065 07/11/2016 PAT 9995051
which is a CON of 13/545,918 07/10/2012 PAT 9388595

**** FOREIGN APPLICATIONS ****************************

**** IF REQUIRED, FOREIGN FILING LICENSE GRANTED ****
05/28/2019

Foreign Priority claimed	❑ Yes ☑ No	❑ Met after Allowance	STATE OR COUNTRY	SHEETS DRAWINGS	TOTAL CLAIMS	INDEPENDENT CLAIMS
35 USC 119(a-d) conditions met	❑ Yes ❑ No		NJ	4	1	1
Verified and Acknowledged	/ALLEN C WONG/ Examiner's Signature	Initials				

ADDRESS
KILPATRICK TOWNSEND & STOCKTON LLP
MAILSTOP: IP DOCKETING - 22
1100 PEACHTREE STREET
SUITE 2800
ATLANTA, GA 30309
UNITED STATES

TITLE
POOL CLEANING SYSTEM AND METHOD TO AUTOMATICALLY CLEAN SURFACES OF A POOL USING IMAGES FROM A CAMERA

FILING FEE RECEIVED		
1720	FEES: Authority has been given in Paper No._____ to charge/credit DEPOSIT ACCOUNT No._____ for following:	❑ All Fees ❑ 1.16 Fees (Filing) ❑ 1.17 Fees (Processing Ext. of time) ❑ 1.18 Fees (Issue) ❑ Other _____ ❑ Credit

Main Concept Text
==========
swimming pool cleaner

Concept Modifiers (4)
==========
4. More Like Text: camera vehicle body processor

3. More Like Text: fail pre-defined threshold underwater

2. More Like Text: filter debris underwater

1. More Like Text: self propelled cleaner

(No Filters)
==========

Options
=======
De-dup: None
Cut-off: None
Sort: Relevance

Content: Non-Patent Literature (25)
==========
IEEE Xplore Publications: IEEE Periodicals
IEEE Xplore Publications: IEEE Conferences
IEEE Xplore Publications: IEEE Standards
IEEE Xplore Publications: IEEE Early Access
IEEE Xplore Publications: IET Periodicals
IEEE Xplore Publications: IET Conferences
IEEE Xplore Publications: SMPTE Periodicals
IEEE Xplore Publications: SMPTE Conferences
IEEE Xplore Publications: SMPTE Standards
IEEE Xplore Publications: MIT Press eBooks
IEEE Xplore Publications: Wiley-IEEE eBooks
IEEE Xplore Publications: IBM Periodicals
IEEE Xplore Publications: URSI Periodicals
IEEE Xplore Publications: VDE Conferences
IEEE Xplore Publications: Periodicals from China
IP.com Prior Art Database: The IP.com Journal
IP.com Prior Art Database: Internet Society RFC
IP.com Prior Art Database: IBM TDB Archive
IP.com Prior Art Database: Legacy Journals
IP.com Prior Art Database: Software Patent Institute
OnePetro.org: Periodicals at OnePetro.org
OnePetro.org: Conferences at OnePetro.org
OnePetro.org: Standards at OnePetro.org

Other Literature: IBM Redbooks
Other Literature: PubMed Central

UNITED STATES PATENT AND TRADEMARK OFFICE

UNITED STATES DEPARTMENT OF COMMERCE
United States Patent and Trademark Office
Address: COMMISSIONER FOR PATENTS
P.O. Box 1450
Alexandria, Virginia 22313-1450
www.uspto.gov

APPLICATION NO.	FILING DATE	FIRST NAMED INVENTOR	ATTORNEY DOCKET NO.	CONFIRMATION NO.
16/416,840	05/20/2019	Kameshwar Durvasula	105650-1141487	5789

23370 7590 06/30/2020
KILPATRICK TOWNSEND & STOCKTON LLP
MAILSTOP: IP DOCKETING - 22
1100 PEACHTREE STREET
SUITE 2800
ATLANTA, GA 30309

EXAMINER
WONG, ALLEN C

ART UNIT	PAPER NUMBER
2488	

NOTIFICATION DATE	DELIVERY MODE
06/30/2020	ELECTRONIC

Please find below and/or attached an Office communication concerning this application or proceeding.

The time period for reply, if any, is set in the attached communication.

Notice of the Office communication was sent electronically on above-indicated "Notification Date" to the following e-mail address(es):

KTSDocketing2@kilpatrick.foundationip.com
ipefiling@kilpatricktownsend.com

Notice of Allowability	Application No. 16/416,840	Applicant(s) Durvasula et al.	
	Examiner ALLEN C WONG	Art Unit 2488	AIA (FITF) Status Yes

-- The MAILING DATE of this communication appears on the cover sheet with the correspondence address--

All claims being allowable, PROSECUTION ON THE MERITS IS (OR REMAINS) CLOSED in this application. If not included herewith (or previously mailed), a Notice of Allowance (PTOL-85) or other appropriate communication will be mailed in due course. **THIS NOTICE OF ALLOWABILITY IS NOT A GRANT OF PATENT RIGHTS.** This application is subject to withdrawal from issue at the initiative of the Office or upon petition by the applicant. See 37 CFR 1.313 and MPEP 1308.

1. ☑ This communication is responsive to 3rd Party IDS filed 9/5/19.
   ☐ A declaration(s)/affidavit(s) under **37 CFR 1.130(b)** was/were filed on _____.

2. ☐ An election was made by the applicant in response to a restriction requirement set forth during the interview on _____; the restriction requirement and election have been incorporated into this action.

3. ☑ The allowed claim(s) is/are 20-25 . As a result of the allowed claim(s), you may be eligible to benefit from the **Patent Prosecution Highway** program at a participating intellectual property office for the corresponding application. For more information, please see **http://www.uspto.gov/patents/init_events/pph/index.jsp** or send an inquiry to **PPHfeedback@uspto.gov.**

4. ☐ Acknowledgment is made of a claim for foreign priority under 35 U.S.C. § 119(a)-(d) or (f).

   Certified copies:

   a) ☐ All b) ☐ Some *c) ☐ None of the:

   1. ☐ Certified copies of the priority documents have been received.
   2. ☐ Certified copies of the priority documents have been received in Application No. _____ .
   3. ☐ Copies of the certified copies of the priority documents have been received in this national stage application from the International Bureau (PCT Rule 17.2(a)).

   * Certified copies not received: _____ .

Applicant has THREE MONTHS FROM THE "MAILING DATE" of this communication to file a reply complying with the requirements noted below. Failure to timely comply will result in ABANDONMENT of this application.
THIS THREE-MONTH PERIOD IS NOT EXTENDABLE.

5. ☐ CORRECTED DRAWINGS (as "replacement sheets") must be submitted.
   ☐ including changes required by the attached Examiner's Amendment / Comment or in the Office action of Paper No./Mail Date _____ .

   Identifying indicia such as the application number (see 37 CFR 1.84(c)) should be written on the drawings in the front (not the back) of each sheet. Replacement sheet(s) should be labeled as such in the header according to 37 CFR 1.121(d).

6. ☐ DEPOSIT OF and/or INFORMATION about the deposit of BIOLOGICAL MATERIAL must be submitted. Note the attached Examiner's comment regarding REQUIREMENT FOR THE DEPOSIT OF BIOLOGICAL MATERIAL.

Attachment(s)

1. ☐ Notice of References Cited (PTO-892)
2. ☐ Information Disclosure Statements (PTO/SB/08), Paper No./Mail Date _____.
3. ☐ Examiner's Comment Regarding Requirement for Deposit of Biological Material _____.
4. ☐ Interview Summary (PTO-413), Paper No./Mail Date. _____.
5. ☐ Examiner's Amendment/Comment
6. ☐ Examiner's Statement of Reasons for Allowance
7. ☑ Other IDS 3rd Party Submission, PTO form PTO/SB/429.

/ALLEN C WONG/
Primary Examiner, Art Unit 2488

WYBOTICS EX1009
Wybotics v. Zodiac
Page 232

Doc Code:IDS.3P
Document Description: Third-Party Submission Under 37 CFR 1.290

PTO/SB/429(08-12)
Approved for use through 07/31/2015. OMB 0651-0031
U.S. Patent and Trademark Office; U.S. DEPARTMENT OF COMMERCE

Under the Paperwork Reduction Act of 1995, no persons are required to respond to a collection of information unless it contains a valid OMB control number.

THIRD-PARTY SUBMISSION UNDER 37 CFR 1.290	Application Number	16416840

U.S. PATENTS

Cite No	Patent Number	Kind Code[1]	Issue Date (YYYY-MM-DD)	First Named Inventor

U.S. PATENT APPLICATION PUBLICATIONS

Cite No	Publication Number	Kind Code[1]	Publication Date (YYYY-MM-DD)	First Named Inventor
1	20130152970		2013-06-20	Porat, Joseph

FOREIGN PATENTS AND PUBLISHED FOREIGN PATENT APPLICATIONS

Cite No	Foreign Document Number[3]	Country Code[2]	Kind Code[1]	Publication Date (YYYY-MM-DD)	Applicant, Patentee or First Named Inventor	T[5]
						☐

NON-PATENT PUBLICATIONS (e.g., journal article, Office action)

Cite No	Author (if any), title of the publication, page(s) being submitted, publication date, publisher (where available), place of publication (where available).	T[5]	E[6]

/ALLEN C WONG/ 06/24/2020

ALL REFERENCES CONSIDERED EXCEPT WHERE LINED THROUGH. /A.W./

THIRD-PARTY SUBMISSION UNDER 37 CFR 1.290	Application Number	16416840

		☐	☐

STATEMENTS

The party making the submission is not an individual who has a duty to disclose information with respect to the above-identified application under 37 CFR 1.56.

This submission complies with the requirements of 35 U.S.C. 122(e) and 37 CFR 1.290.

☐ The fee set forth in 37 CFR 1.290(f) has been submitted herewith.

☒ The fee set forth in 37 CFR 1.290(f) is not required because this submission lists three or fewer total items and, to the knowledge of the person signing the statement after making reasonable inquiry, this submission is the first and the only submission under 35 U.S.C 122(e) filed in the above-identified application by the party making the submission or by a party in privity with the party.

☐ This resubmission is being made responsive to a notification of non-compliance issued for an earlier filed third-party submission. The corrections in this resubmission are limited to addressing the non-compliance. As such, the party making this resubmission: (1) requests that the Office apply the previously-paid fee set forth in 37 CFR 1.290(f), or (2) states that no fee is required to accompany this resubmission as the undersigned is again making the fee exemption statement set forth in 37 CFR 1.290(g).

Signature	/Benny Attar/		
Name/Print	Benjamin Attar	Registration Number (if applicable)	

Examiner Signature	/ALLEN C WONG/	Date Considered	06/24/2020

*EXAMINER: Signature indicates all documents listed above have been considered,except for citations through which a line is drawn. Draw line through citation if not considered. Include a copy of this form with next communication to applicant. 1. If known, enter kind of document by the appropriate symbols as indicated on the document under WIPO Standard ST.16. See MPEP 901.04(a). 2. Enter the country or patent office that issued the document, by two-letter code under WIPO standard ST.3. See MPEP 1851. 3. For Japanese patent documents, the indication of the year of the reign of the Emperor must precede the serial number of the patent document. 4. If known, enter the kind of document by the appropriate symbols as indicated on the document under WIPO Standard ST.16 . See MPEP 901.04(a). 5. Check mark indicates translation attached. 6. Check mark indicates evidence of publication attached.

ALL REFERENCES CONSIDERED EXCEPT WHERE LINED THROUGH. /A.W./

PART B - FEE(S) TRANSMITTAL

Complete and send this form, together with applicable fee(s), by mail or fax, or via EFS-Web.

By mail, send to: Mail Stop ISSUE FEE
Commissioner for Patents
P.O. Box 1450
Alexandria, Virginia 22313-1450

By fax, send to: (571)-273-2885

INSTRUCTIONS: This form should be used for transmitting the ISSUE FEE and PUBLICATION FEE (if required). Blocks 1 through 5 should be completed where appropriate. All further correspondence including the Patent, advance orders and notification of maintenance fees will be mailed to the current correspondence address as indicated unless corrected below or directed otherwise in Block 1, by (a) specifying a new correspondence address; and/or (b) indicating a separate "FEE ADDRESS" for maintenance fee notifications.

CURRENT CORRESPONDENCE ADDRESS (Note: Use Block 1 for any change of address)

23370 7590 04/29/2020
KILPATRICK TOWNSEND & STOCKTON LLP
MAILSTOP: IP DOCKETING - 22
1100 PEACHTREE STREET
SUITE 2800
ATLANTA, GA 30309

Note: A certificate of mailing can only be used for domestic mailings of the Fee(s) Transmittal. This certificate cannot be used for any other accompanying papers. Each additional paper, such as an assignment or formal drawing, must have its own certificate of mailing or transmission.

Certificate of Mailing or Transmission

I hereby certify that this Fee(s) Transmittal is being deposited with the United States Postal Service with sufficient postage for first class mail in an envelope addressed to the Mail Stop ISSUE FEE address above, or being transmitted to the USPTO via EFS-Web or by facsimile to (571) 273-2885, on the date below.

Sandee Harvey	(Typed or printed name)
/Sandee Harvey/	(Signature)
2020-07-02	(Date)

APPLICATION NO.	FILING DATE	FIRST NAMED INVENTOR	ATTORNEY DOCKET NO.	CONFIRMATION NO.
16/416,840	05/20/2019	Kameshwar Durvasula	105650-1141487	5789

TITLE OF INVENTION: POOL CLEANING SYSTEM AND METHOD TO AUTOMATICALLY CLEAN SURFACES OF A POOL USING IMAGES FROM A CAMERA

APPLN. TYPE	ENTITY STATUS	ISSUE FEE DUE	PUBLICATION FEE DUE	PREV. PAID ISSUE FEE	TOTAL FEE(S) DUE	DATE DUE
nonprovisional	UNDISCOUNTED	$1000	$0.00	$0.00	$1000	07/29/2020

EXAMINER	ART UNIT	CLASS-SUBCLASS
WONG, ALLEN C	2488	348-114000

1. Change of correspondence address or indication of "Fee Address" (37 CFR 1.363).

☐ Change of correspondence address (or Change of Correspondence Address form PTO/SB/122) attached.

☐ "Fee Address" indication (or "Fee Address" Indication form PTO/SB/47; Rev 03-09 or more recent) attached. **Use of a Customer Number is required.**

2. For printing on the patent front page, list
(1) The names of up to 3 registered patent attorneys or agents OR, alternatively,
(2) The name of a single firm (having as a member a registered attorney or agent) and the names of up to 2 registered patent attorneys or agents. If no name is listed, no name will be printed.

1 Kilpatrick Townsend & Stockton LLP
2 Dean W. Russell
3

3. ASSIGNEE NAME AND RESIDENCE DATA TO BE PRINTED ON THE PATENT (print or type)

PLEASE NOTE: Unless an assignee is identified below, no assignee data will appear on the patent. If an assignee is identified below, the document must have been previously recorded, or filed for recordation, as set forth in 37 CFR 3.11 and 37 CFR 3.81(a). Completion of this form is NOT a substitute for filing an assignment.

(A) NAME OF ASSIGNEE: AQUA PRODUCTS, INC.

(B) RESIDENCE: (CITY and STATE OR COUNTRY): CEDAR GROVE, NEW JERSEY

Please check the appropriate assignee category or categories (will not be printed on the patent) : ☐ Individual ☒ Corporation or other private group entity ☐ Government

4a. Fees submitted: ☒ Issue Fee ☐ Publication Fee (if required) ☐ Advance Order - # of Copies _____

4b. Method of Payment: *(Please first reapply any previously paid fee shown above)*

☒ Electronic Payment via EFS-Web ☐ Enclosed check ☐ Non-electronic payment by credit card (Attach form PTO-2038)

☒ The Director is hereby authorized to charge the required fee(s), any deficiency, or credit any overpayment to Deposit Account No. 20-1430

5. **Change in Entity Status** (from status indicated above)

☐ Applicant certifying micro entity status. See 37 CFR 1.29

☐ Applicant asserting small entity status. See 37 CFR 1.27

☐ Applicant changing to regular undiscounted fee status.

NOTE: Absent a valid certification of Micro Entity Status (see forms PTO/SB/15A and 15B), issue fee payment in the micro entity amount will not be accepted at the risk of application abandonment.
NOTE: If the application was previously under micro entity status, checking this box will be taken to be a notification of loss of entitlement to micro entity status.
NOTE: Checking this box will be taken to be a notification of loss of entitlement to small or micro entity status, as applicable.

NOTE: This form must be signed in accordance with 37 CFR 1.31 and 1.33. See 37 CFR 1.4 for signature requirements and certifications.

Authorized Signature / Dean W. Russell / Date 2020-07-02

Typed or printed name Dean W. Russell Registration No. 33452

Electronic Patent Application Fee Transmittal

Application Number:	16416840
Filing Date:	20-May-2019
Title of Invention:	POOL CLEANING SYSTEM AND METHOD TO AUTOMATICALLY CLEAN SURFACES OF A POOL USING IMAGES FROM A CAMERA
First Named Inventor/Applicant Name:	Kameshwar Durvasula
Filer:	Dean W. Russell/Sandee Harvey-McCullough
Attorney Docket Number:	105650-1141487

Filed as Large Entity

Filing Fees for Utility under 35 USC 111(a)

Description	Fee Code	Quantity	Amount	Sub-Total in USD($)
Basic Filing:				
Pages:				
Claims:				
Miscellaneous-Filing:				
Petition:				
Patent-Appeals-and-Interference:				
Post-Allowance-and-Post-Issuance:				
UTILITY APPL ISSUE FEE	1501	1	1000	1000

Description	Fee Code	Quantity	Amount	Sub-Total in USD($)
Extension-of-Time:				
Miscellaneous:				
			Total in USD ($)	**1000**

Electronic Acknowledgement Receipt

EFS ID:	39898118
Application Number:	16416840
International Application Number:	
Confirmation Number:	5789
Title of Invention:	POOL CLEANING SYSTEM AND METHOD TO AUTOMATICALLY CLEAN SURFACES OF A POOL USING IMAGES FROM A CAMERA
First Named Inventor/Applicant Name:	Kameshwar Durvasula
Customer Number:	23370
Filer:	Dean W. Russell/Sandee Harvey-McCullough
Filer Authorized By:	Dean W. Russell
Attorney Docket Number:	105650-1141487
Receipt Date:	02-JUL-2020
Filing Date:	20-MAY-2019
Time Stamp:	12:16:53
Application Type:	Utility under 35 USC 111(a)

Payment information:

Submitted with Payment	yes
Payment Type	CARD
Payment was successfully received in RAM	$1000
RAM confirmation Number	E202072C18559290
Deposit Account	201430
Authorized User	Sandee Harvey-McCullough

The Director of the USPTO is hereby authorized to charge indicated fees and credit any overpayment as follows:

37 CFR 1.16 (National application filing, search, and examination fees)

37 CFR 1.17 (Patent application and reexamination processing fees)

37 CFR 1.19 (Document supply fees)

37 CFR 1.20 (Post Issuance fees)

37 CFR 1.21 (Miscellaneous fees and charges)

File Listing:

Document Number	Document Description	File Name	File Size(Bytes)/ Message Digest	Multi Part /.zip	Pages (if appl.)
1	Issue Fee Payment (PTO-85B)	1141487_ISSUEFEE.pdf	1878569 611448766703233382d95916601921e7ca8cfc48	no	1
Warnings:					
Information:					
2	Fee Worksheet (SB06)	fee-info.pdf	30541 cf8d0cf573367e119d2e60b06fba0a05f0787457	no	2
Warnings:					
Information:					
		Total Files Size (in bytes):	1909110		

This Acknowledgement Receipt evidences receipt on the noted date by the USPTO of the indicated documents, characterized by the applicant, and including page counts, where applicable. It serves as evidence of receipt similar to a Post Card, as described in MPEP 503.

<u>New Applications Under 35 U.S.C. 111</u>
If a new application is being filed and the application includes the necessary components for a filing date (see 37 CFR 1.53(b)-(d) and MPEP 506), a Filing Receipt (37 CFR 1.54) will be issued in due course and the date shown on this Acknowledgement Receipt will establish the filing date of the application.
<u>National Stage of an International Application under 35 U.S.C. 371</u>
If a timely submission to enter the national stage of an international application is compliant with the conditions of 35 U.S.C. 371 and other applicable requirements a Form PCT/DO/EO/903 indicating acceptance of the application as a national stage submission under 35 U.S.C. 371 will be issued in addition to the Filing Receipt, in due course.
<u>New International Application Filed with the USPTO as a Receiving Office</u>
If a new international application is being filed and the international application includes the necessary components for an international filing date (see PCT Article 11 and MPEP 1810), a Notification of the International Application Number and of the International Filing Date (Form PCT/RO/105) will be issued in due course, subject to prescriptions concerning national security, and the date shown on this Acknowledgement Receipt will establish the international filing date of the application.

UNITED STATES PATENT AND TRADEMARK OFFICE

UNITED STATES DEPARTMENT OF COMMERCE
United States Patent and Trademark Office
Address: COMMISSIONER FOR PATENTS
P.O. Box 1450
Alexandria, Virginia 22313-1450
www.uspto.gov

APPLICATION NO.	ISSUE DATE	PATENT NO.	ATTORNEY DOCKET NO.	CONFIRMATION NO.
16/416,840	08/11/2020	10739785	105650-1141487	5789

23370 7590 07/22/2020

KILPATRICK TOWNSEND & STOCKTON LLP
MAILSTOP: IP DOCKETING - 22
1100 PEACHTREE STREET
SUITE 2800
ATLANTA, GA 30309

ISSUE NOTIFICATION

The projected patent number and issue date are specified above.

Determination of Patent Term Adjustment under 35 U.S.C. 154 (b)
(application filed on or after May 29, 2000)

The Patent Term Adjustment is 0 day(s). Any patent to issue from the above-identified application will include an indication of the adjustment on the front page.

If a Continued Prosecution Application (CPA) was filed in the above-identified application, the filing date that determines Patent Term Adjustment is the filing date of the most recent CPA.

Applicant will be able to obtain more detailed information by accessing the Patent Application Information Retrieval (PAIR) WEB site (http://pair.uspto.gov).

Any questions regarding the Patent Term Extension or Adjustment determination should be directed to the Office of Patent Legal Administration at (571)-272-7702. Questions relating to issue and publication fee payments should be directed to the Application Assistance Unit (AAU) of the Office of Data Management (ODM) at (571)-272-4200.

APPLICANT(s) (Please see PAIR WEB site http://pair.uspto.gov for additional applicants):

Kameshwar Durvasula, Garfield, NJ;
AQUA PRODUCTS, INC., Cedar Grove, NJ;
William Londono Correa, Bloomfield, NJ;

The United States represents the largest, most dynamic marketplace in the world and is an unparalleled location for business investment, innovation, and commercialization of new technologies. The USA offers tremendous resources and advantages for those who invest and manufacture goods here. Through SelectUSA, our nation works to encourage and facilitate business investment. To learn more about why the USA is the best country in the world to develop technology, manufacture products, and grow your business, visit SelectUSA.gov.