UNITED STATES PATENT AND TRADEMARK OFFICE

BEFORE THE PATENT TRIAL AND APPEAL BOARD

MEDTRONIC, INC.,
Petitioner,
v.

MOSKOWITZ FAMILY LLC,
Patent Owner

IPR2026-00162
Patent No. 12,011,367

MOSKOWITZ EXHIBIT 2024

DECLARATION OF DR. NATHAN C. MOSKOWITZ IN SUPPORT OF PATENT OWNER'S PRELIMINARY RESPONSE

Mail Stop "PATENT BOARD"
Patent Trial and Appeal Board
U.S. Patent and Trademark Office
P.O. Box 1450
Alexandria, VA 22313-1450

I, Dr. Nathan C. Moskowitz, declare as follows:

I. Background and Qualifications

1. I am a neurosurgeon and inventor specializing in spinal surgery and spinal implant technology. I have personal knowledge of the facts set forth in this declaration and, if called as a witness, could and would testify competently thereto.

2. I am the founder of Moskowitz Family LLC. I am the lead inventor of the patents assigned to Moskowitz Family LLC, including the patents relevant to this matter.

3. Moskowitz Family LLC is a limited liability company organized under the laws of the State of Maryland, with its principal place of business at 212 North Adams Street, Suite 1, Rockville, Maryland 20850. The company was formed to develop human spine-related medical devices and to protect and license the intellectual property arising from those developments.

4. I received my Ph.D. in Neurochemistry in 1982 and my medical degree in 1984 from the Mount Sinai School of Medicine. I completed my training in General Surgery and Neurological Surgery at Johns Hopkins Hospital, where I served as Chief Resident. I also held several fellowship positions at Johns Hopkins University.

5. Since 1992, I have served as an Assistant Professor in the Department of Neurosurgery at Johns Hopkins University. I have also served as Chief of the

Department of Neurosurgery at Shady Grove Adventist Hospital and Chief of the Department of Neurosurgery at Montgomery General Hospital.

6. I am a Fellow of the American College of Surgeons, the International College of Surgeons, and the American Academy of Neurological Surgeons.

7. In addition to my clinical work, I have conducted research and published more than thirty research articles and abstracts in peer-reviewed scientific and medical journals, including *Science*, the *Journal of Neurochemistry*, *Brain Research*, the *Journal of Neurosurgery*, *Biochemical and Biophysical Research Communications*, and *Medical Hypotheses*.

8. I have received numerous professional recognitions for patient care and contributions to the medical field. These include being named among "America's Best Physicians" for multiple consecutive years, receiving the "Castle Connolly Top Doctor Award" annually since 2008, and being recognized as one of the top inventors in spine technology in Spinemarket's Annual Patent Power Index.

9. Over the course of my clinical practice, I became acutely aware of complications associated with conventional spinal fusion technology, including risks of neural and vascular injury, esophageal injury, excessive blood loss, prolonged operative time, prolonged recovery, and hardware-related complications such as screw misplacement and implant pullout.

10. Based on my clinical experience treating patients with spinal disorders and performing spinal procedures, I concluded that existing static and non-expandable intervertebral implants and associated fixation systems did not adequately address these risks. I therefore began focusing significant time and resources on developing improved spinal implant technologies, including minimally invasive spinal implants, expandable intervertebral implants, fixation systems, and associated implantation tools.

11. Through Moskowitz Family LLC (including its predecessor Flexispine) and related development efforts, I have developed a substantial portfolio of intellectual property relating to minimally invasive spinal surgery, including expandable intervertebral implants, spinal fixation systems, and associated surgical instrumentation. These efforts have resulted in nearly one hundred issued United States patents relating to spinal implant technology and additional pending patent applications.

12. The technologies described and claimed in these patents were developed to improve surgical safety, reduce tissue disruption, minimize operative time, enhance implant fit and stability, and improve overall patient outcomes.

13. Although Moskowitz Family LLC has developed and manufactured prototype spinal implant devices and associated surgical instrumentation embodying aspects of the inventions described in this declaration for research and

demonstration purposes, neither Moskowitz Family LLC nor any licensee has commercially manufactured, sold, offered for sale, or imported products practicing the asserted patent claims. The prototype devices were created solely for research, development, and demonstration purposes and were not commercialized. They were not sold, offered for sale, or commercialized.

14. The inventions at issue were conceived and developed as part of my broader effort to advance spinal fusion technology through minimally invasive, expandable, and zero-profile intervertebral implant systems and associated tools.

II. Conception of the Expandable Implant Embodiments

15. By May 18, 2011, I had formed a definite and permanent idea of the complete and operative structure and operation of the expandable intervertebral implant embodiments described in this declaration. At that time, the structural configuration and operation of those embodiments—including the arrangement of implant bodies and internal expansion mechanisms—had been determined with sufficient detail that a person of ordinary skill in the art could implement the designs through routine engineering drawings and prototype fabrication.

16. I understand that, in evaluating patent issues, courts and the Patent Trial and Appeal Board refer to a "person of ordinary skill in the art," which is a hypothetical person who is presumed to be familiar with the relevant technical field and the pertinent prior art at the time of the invention. Counsel has informed

me that the level of ordinary skill may be determined by considering factors such as the types of problems encountered in the field, the prior art solutions to those problems, the speed with which innovations are made in the field, the sophistication of the technology, and the education and experience of individuals working in the field. My opinions expressed in this declaration are based on my understanding of the knowledge and capabilities of such a person at the relevant time.

17. I believe that a person of ordinary skill in the art as of the 2011 – 2012 time period would have had a bachelor's degree in mechanical engineering, biomechanical engineering, or similar discipline, and five years relevant industry experience relating to medical device design or manufacture; or a master's degree in mechanical engineering, biomechanical engineering, or similar discipline, and either three years relevant industry experience relating to medical device design or manufacture and/or three years teaching at the collegiate level as a professor; or a doctorate in mechanical engineering, biomechanical engineering, or similar discipline; or a medical degree and residency training in neurosurgery or orthopedic surgery, and three to five years of post-residency spinal surgery and spinal instrumentation experience as a primary surgeon. However, I recognize that someone with less technical education but more experience, or more technical education but less experience, could also meet this standard.

18. In general terms, the inventions relate to expandable intervertebral implants configured to be inserted into the disc space in a compact configuration and subsequently expanded in a controlled manner after placement between adjacent vertebrae. The devices include internal mechanical structures that translate actuation forces into expansion of the implant body to restore disc height and stabilize the spinal segment.

19. The expandable implant embodiments conceived by that time included structural bodies configured to engage adjacent vertebral bodies, interior surfaces of those bodies positioned opposite the vertebral engagement surfaces, and internal expansion mechanisms positioned between the implant bodies. The expansion mechanisms were configured so that translation of a wedge element between the implant bodies caused relative movement of the implant bodies to expand the device from a compressed configuration to an expanded configuration.

20. The inventions also include structural features that allow the implant to engage vertebral bodies and incorporate bone graft material to facilitate spinal fusion.

21. By this time, I had conceived of multiple mechanisms for achieving controlled expansion within an intervertebral implant. These mechanisms included embodiments in which a wedge element positioned between implant bodies

translates within the implant to convert motion of an actuation element into controlled expansion of the device after insertion between adjacent vertebrae.

22. My conception of these inventions was sufficiently detailed that a skilled artisan could implement the designs through engineering drawings and prototype fabrication.

A. Development of Detailed Implant Designs

23. Beginning in April 2011, I worked with co-inventors including my sons Ahmnon ("Andy") Moskowitz and Mosheh Moskowitz, Eric Sugalski, and David Schoon to develop expandable spinal implant concepts and detailed designs for several expandable intervertebral implant embodiments.

24. On April 11, 2011, Andy contacted Mr. Sugalski to see if he was interested in working on an expandable spinal implant system. He attached drawings of our earlier expandable device and described the improvements we envisioned. *See* Ex. 2025.

25. The expandable implant concepts we were developing were intended to be used with specialized surgical instrumentation. Consistent with that integrated approach, on April 11, 2011—the same day Andy contacted Mr. Sugalski to begin engineering work on expandable implant embodiments—we

filed a related patent application[1] directed to a universal surgical tool for inserting and manipulating spinal implants. This application was assigned attorney docket number 3003/0105PUS2. These contemporaneous events reflect the fact that we were already actively developing an expandable implant system that included both the implant embodiments and the associated insertion and actuation tool. From the outset, I viewed the expandable implants and the associated insertion and actuation tool as parts of a single expandable implant system.

26. As part of this work, we developed and documented multiple expandable intervertebral implant embodiments through an iterative design process involving the exchange of technical drawings, engineering files, and design discussions.

27. On April 15, 2011, Andy Moskowitz sent Mr. Sugalski CAD files of our previously-patented expandable devices and tools to insert and actuate the devices along with instructions to modify the shape of the device to improve ease of insertion. Ex. 2056. These CAD files were originally created by co-inventor Pablo A. Valdivia Y. Alvarado as part of earlier development work on expandable spinal implant designs. Another co-inventor, Mosheh Moskowitz, contributed to

---

[1] U.S. Patent Application No. 13/084,543 ("the '543 application"), attached hereto as Exhibit 2026.

the conception of the earlier expandable implant embodiment reflected in those CAD drawings, which predated the development work described here. Representative images from these CAD files are shown below.

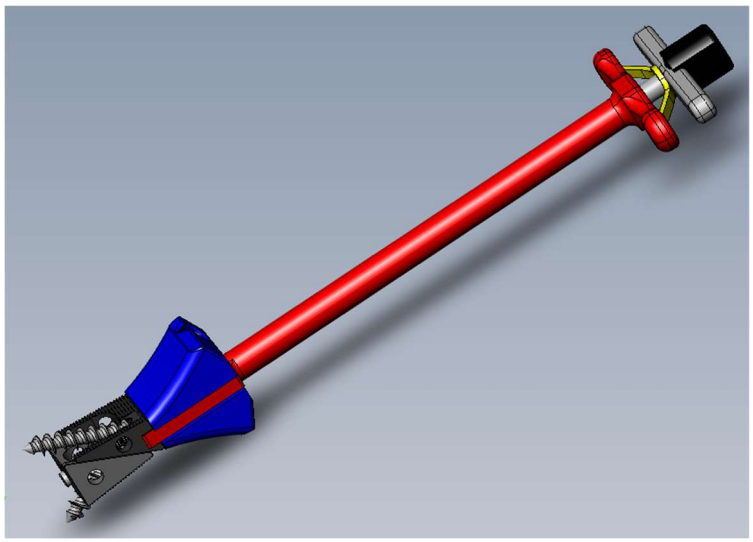

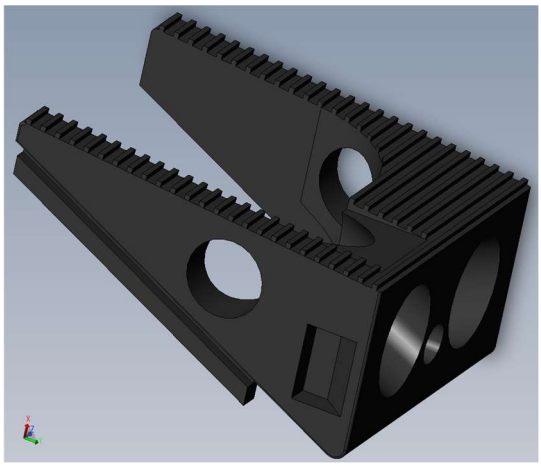

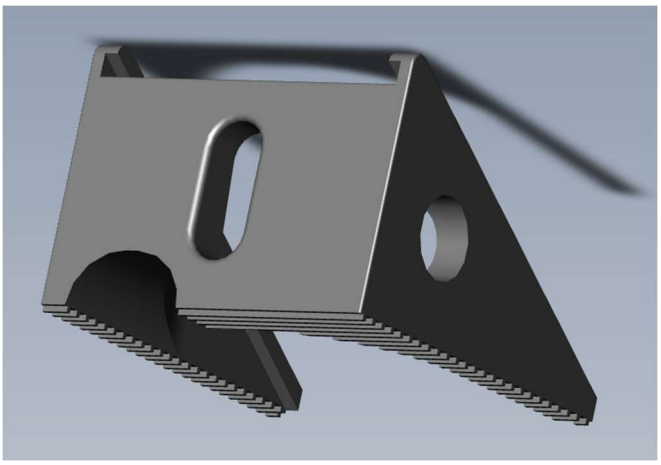

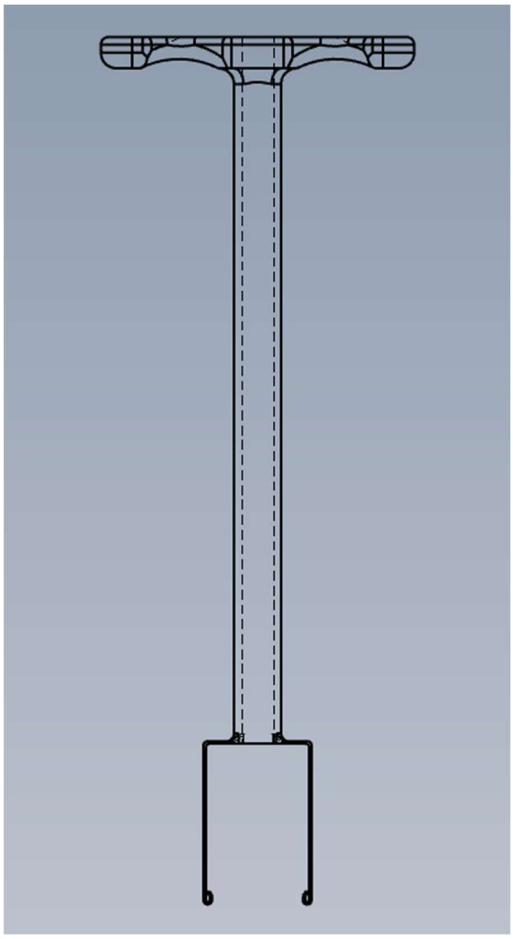

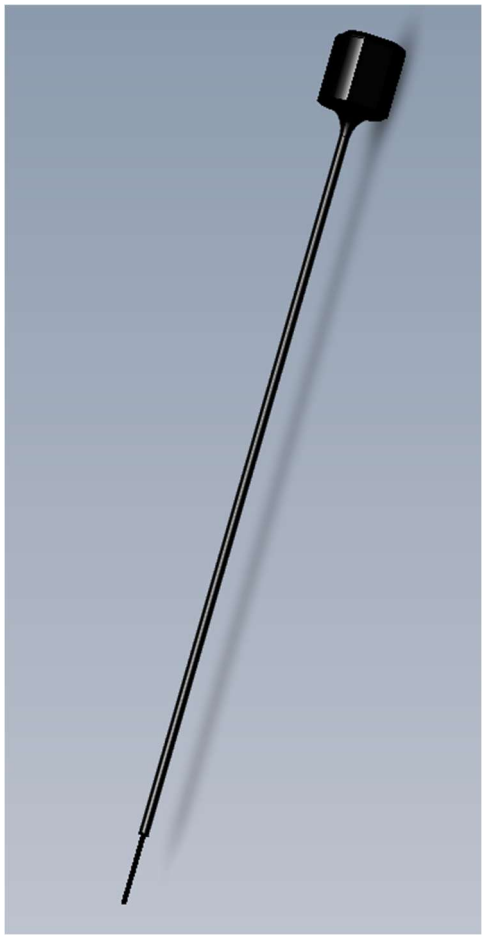

28. These earlier embodiments contained important features such as ridges, cavities for bone graft, and indentations on the side of the device to engage with tools. On April 17, 2011, I informed Mr. Sugalski that the new embodiments "need to maintain something like ridges to help engage bone." Ex. 2057 at 1. On this same day, Andy separately informed Mr. Sugalski that the final drawings should include indentations for engagement by the universal tool. Ex. 2058 at 1.

29. During April and May 2011, we exchanged numerous communications discussing the structural configuration and expansion mechanisms for these implants, including the relative positioning and movement of implant

components, the overall shape of the implant bodies, and features designed to allow bone graft material to be placed within the implant.

30. These discussions included the exchange of engineering drawings and design files that illustrated the structure and operation of various expandable implant embodiments.

31. For example, on May 3, 2011, Mr. Sugalski and his colleague Mr. Schoon circulated drawings and a CAD file illustrating several expandable implant designs—including embodiments using wedge-based expansion mechanisms—for review. Ex. 2027.

32. The drawings circulated on May 3, 2011 illustrated the structure and operation of several expandable implant embodiments, including wedge-based expansion mechanisms in which a wedge element positioned between implant bodies moves relative to those bodies to cause expansion of the device. At that point, the fundamental structure and operation of those expandable implant embodiments had been determined, although additional refinements and implementation details continued to be discussed and documented in later communications.

33. The figures below show certain exemplary embodiments from these drawings (top) above the corresponding figures from the October 25, 2012

provisional application (bottom) that constitutes the reduction to practice of these inventions:

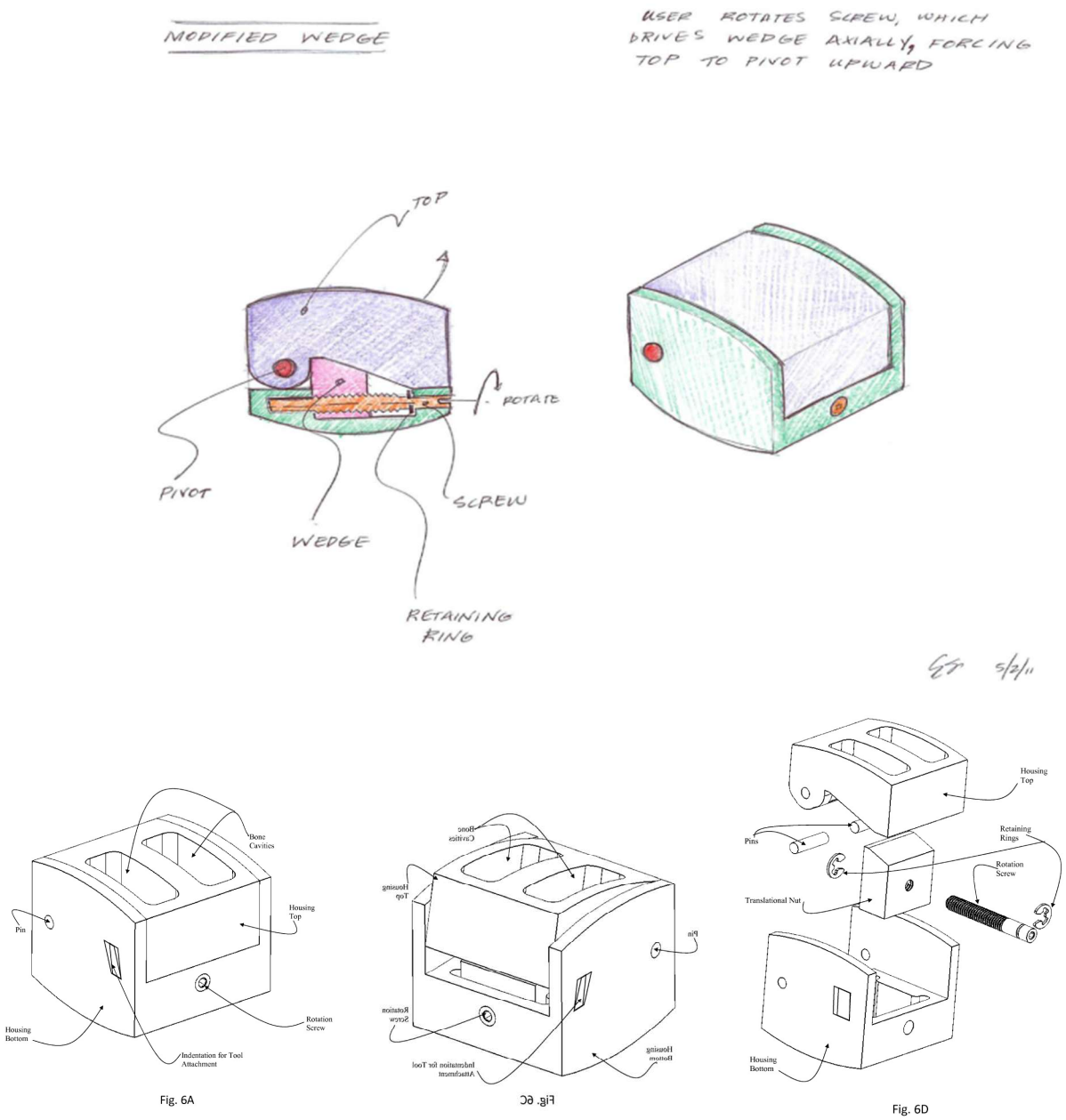

34. After reviewing those drawings, I spoke with Mr. Sugalski to provide feedback regarding the design and operation of the expandable implant embodiments shown in the drawings. *See* Ex. 2028 at 2–3 (May 4, 2011 email in

which Andy informs Mr. Sugalski that the spikes should be replaced with grooves and requests that Mr. Sugalski call me to discuss); *id.* at 1 (May 5, 2011 response in which Mr. Sugalski confirms that the spikes will be eliminated and "[r]idges will also be placed on the top and bottom surfaces of the fusion wedges to maintain grip").

35. Based on those discussions, we continued refining certain embodiments and preparing drawings for potential prototype development. For example, on May 18, 2011, an e-drawing of an expandable implant embodiment and drawings for custom machined parts were circulated for review. *See* Ex. 2029.

36. That same day, after reviewing those drawings, I provided feedback regarding additional design features, including the incorporation of cavities that would allow the implants to receive bone graft material during spinal fusion procedures. I explained that "[t]he bone must be able to fuse with the vertebrae above and below thus establishing a biological bridge. This device has a cavity on one side. The blue shaded area has no opening for bone, This renders the device useless in that it will not allow for biological fusion. Thus a central cavity must exist . . . ." Ex. 2030 at 2. The next day, Mr. Sugalski explained that his initial design contained small pockets for bone paste, but he would try to find the optimal size for larger thru holes and would send updated designs to me and Andy for review. *Id.* at 1.

37. Additional design discussions occurred on May 23–25, 2011, during which revised drawings were circulated and further refinements to the implant structure were discussed. *See* Exs. 2031, 2032.

38. On May 27, 2011, Mr. Sugalski circulated revised e-drawings, a representative image of which is shown below. On May, 28, 2011, I responded that the e-drawing "[l]ooks very nice." Ex. 2059. I also explained that "[t]he ridges are very important for bone integration, and the inserts [i.e., indentations] are important for tool application," so they should be included in the prototype, which I would discuss with Andy. *Id.*

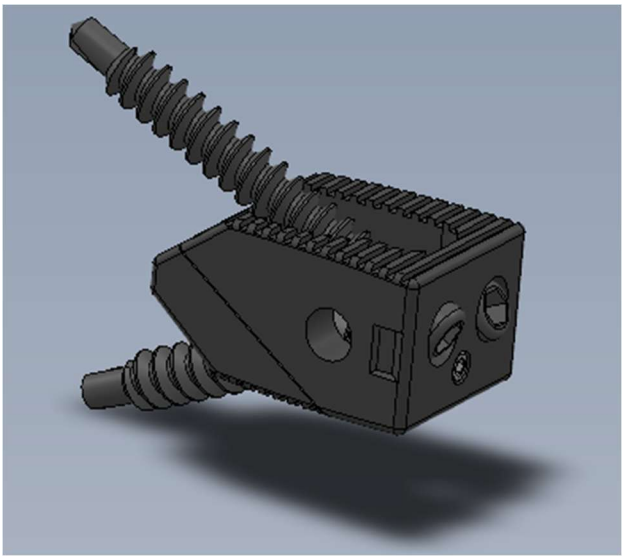

39. These exchanges reflected an ongoing process of refining and documenting detailed design drawings of expandable implant embodiments that had already been conceived, including embodiments utilizing wedge-based expansion mechanisms and other expandable implant configurations.

40. By the end of May 2011, the design of at least one expandable implant embodiment had been sufficiently documented to permit prototype fabrication, and that embodiment was selected for initial prototyping as part of our broader development effort involving multiple expandable implant embodiments.

B. Conception Was Complete by May 18, 2011

41. By May 18, 2011, I had formed a definite and permanent understanding of the structure and operation of the expandable implant embodiments described above.

42. The designs developed by that time included multiple expansion mechanisms that could be used to achieve controlled expansion within the disc space. These mechanisms included, among others, implant bodies configured to expand through internal translation of a wedge or similar element positioned between structural components of the implant body. Movement of the wedge component caused relative motion between portions of the implant body, resulting in expansion of the device from a compressed configuration to an expanded configuration. The various embodiments shared common structural principles and were part of the same expandable implant development effort.

43. The drawings circulated on May 3, 2011 illustrated the structural configuration of the implants and the mechanisms by which they expanded, including wedge-based expansion mechanisms.

44. At that time, although certain implementation details and refinements continued to be discussed and documented during later design work, the structural configuration and operational principles of the expandable implant embodiments had already been determined, including the mechanisms by which the implants expand within the disc space.

45. Subsequent communications and drawings during May and June 2011 involved refinement and documentation of these previously conceived designs and preparation for prototype fabrication.

46. These events confirm that by May 18, 2011, the structure and operation of the expandable implant embodiments described above—including embodiments utilizing wedge-based mechanisms in which a wedge element moves between implant bodies to produce expansion of the device—had been fully conceived. These embodiments formed the basis of the expandable implant development effort described in the sections that follow.

III. Continued Development and Prototyping of an Expandable Implant System

47. After the expandable implant embodiments described herein were conceived and detailed drawings had been prepared in the spring of 2011, work continued to refine the designs and develop prototype embodiments as part of the ongoing effort to implement and evaluate those already-conceived designs.

48. At that stage of development, we selected one of the expandable implant embodiments for initial prototype fabrication. Because the prototypes required custom machining and were being funded personally, we initially focused our prototyping efforts on a single embodiment in order to evaluate the feasibility and operation of the expandable implant concept before committing additional resources to prototype other embodiments.

49. On June 1, 2011, detailed drawings of the expandable implant embodiment were circulated for review. Ex. 2033.

50. After reviewing these drawings, I confirmed that the designs accurately reflected the expandable implant embodiment that had been selected for prototype development.

51. In a June 1, 2011 communication, I described the drawings as "beautiful work," reflecting that the designs successfully captured the structural and functional features of that expandable implant embodiment. *See* Ex. 2034 at 1.

52. After reviewing the drawings and confirming that the design was consistent with the implant concepts we had developed, I authorized the engineering team to proceed with fabrication of prototypes based on those drawings. *See* Ex. 2035 at 1.

53. In early June 2011, following my authorization to proceed with prototyping, files reflecting the expandable implant design were transmitted to a prototype shop for fabrication of a prototype device. *See* Ex. 2036 at 1.

54. On June 22, 2011, Mr. Sugalski sent images of a completed prototype of an expandable lumbar fusion device and reported that it was functioning well. *See* Ex. 2037.

55. On July 6, 2011, after returning from vacation, Mr. Sugalski indicated that he was sending the prototype to me and Andy for evaluation. Ex. 2060. We received the prototype approximately one week later.

56. During this period, I and my co-inventors continued to evaluate the design and functionality of the prototype embodiment and to discuss potential refinements and additional features.

57. For example, in July 2011, continued communications with Mr. Sugalski addressed the physical prototype that had been fabricated and the tools necessary to evaluate and manipulate the prototype. *See* Ex. 2038 (July 24, 2011 email noting that the prototype appeared promising but that appropriate instruments were needed to fully evaluate its utility).

58. These discussions also addressed tools and drivers capable of engaging and actuating the implant mechanisms during testing. *See* Ex. 2039 (July

25, 2011 email discussing potential instruments that could be used with the device).

59. In August 2011, after receiving additional tools that could engage the device, I confirmed that the expansion mechanism of the prototype functioned as intended. Ex. 2040 (August 8, 2011 email stating that the mechanism worked "beautifully").

60. The prototype embodiment confirmed the feasibility of the expandable implant concepts we had developed.

61. Although the prototype work focused on a particular expandable embodiment, the broader inventive concepts we had developed—including wedge-based expansion mechanisms—remained part of the overall expandable implant development effort.

62. For example, from October–November 2011, additional work was undertaken to prepare patent claims and drawings directed to expandable implant embodiments based on the designs that had been developed earlier that year. For example, on October 11, 2011, Andy circulated draft claims directed to expandable implant devices and noted that drawings were being prepared by Mosheh. *See* Ex. 2041. On November 7, 2011, Andy sent additional draft claims for expandable implant cages for review, and I confirmed that the claims appeared appropriate.

See Ex. 2042. These communications reflected ongoing efforts to document the expandable implant concepts and prepare them for patent protection.

IV. Reasonably Continuous Diligence During the Critical Period (December 2011 – October 2012)

63. The expandable implant embodiments described above were developed as part of a broader effort to design a system of expandable spinal implants and surgical tools used to implant and actuate those devices. Although different embodiments used different expansion mechanisms, they shared common structural principles, including features allowing them to be implanted and expanded using the same universal surgical tool, and were part of the same expandable implant development project. After the expandable implant embodiments were conceived, my collaborators and I continued working toward implementation, refinement, and documentation of those embodiments, including prototype evaluation, preparation of drawings and written descriptions, and work with patent counsel to protect the inventions.

64. In developing spinal implant technology, engineering development, prototype evaluation, preparation of drawings and written descriptions, and work with patent counsel to protect related inventions typically occur in an overlapping and iterative manner rather than as separate sequential steps. During the period described below, my collaborators and I were working toward development and protection of a single expandable implant system that included both the implant

embodiments and the associated universal surgical tool used to implant and actuate those devices. Accordingly, work relating to prototype evaluation, preparation of drawings and claim language, and prosecution of the related surgical tool patent application all formed part of the same continuing effort to develop and protect the expandable implant technology.

65. Beginning before December 2011 and continuing through the filing of the October 25, 2012 provisional application, I remained actively engaged in work relating to the expandable implant system and associated surgical tools. Representative examples of this work include the following:

- In November and December 2011, collaborators prepared electronic drawings, written descriptions, and draft claims for expandable implant embodiments based on earlier design work.
- In January 2012, I reviewed those drawings and discussed additional design features, including incorporation of bone graft cavities.
- During February and March 2012, I worked with patent counsel regarding prosecution of a related application directed to a universal surgical tool designed to insert and actuate spinal implants, including preparing for and participating in an examiner interview.
- In March 2012, I provided text and figures describing expandable implant embodiments that could be actuated by such a universal tool.

- In April 2012, we explored options for fabricating additional expandable implant prototypes.
- Throughout the spring and summer of 2012, I continued working with counsel regarding responses to Office Actions and amendments relating to the tool application.
- In August 2012, I devoted an entire day to reviewing the expandable implant prototype and related design and patent materials with collaborators.
- On September 13, 2012, the U.S. Patent and Trademark Office issued a Notice of Allowance for the tool application.
- Following receipt of that Notice of Allowance, I worked with counsel to finalize preparation of a patent application describing the expandable implant embodiments and related surgical tools. That work culminated in the filing of a provisional patent application describing multiple expandable implant embodiments and associated universal surgical tools on October 25, 2012.

66. This work included further development and documentation of expandable implant embodiments as well as work with patent counsel to protect inventions relating to both the expandable implant systems and associated surgical tools used to insert and actuate those implants.

67. During this period, work relating to expandable implant embodiments and related surgical tools was proceeding in parallel. My efforts included both technical development and work with counsel to obtain patent protection for related inventions that formed part of the same implant system.

68. During this period, work relating to the expandable implant system occurred on a reasonably continuous basis. I devoted time to these activities as permitted by my clinical responsibilities, including reviewing designs, communicating with collaborators, evaluating prototypes, and working with patent counsel regarding protection of the inventions.

69. During this period, numerous communications occurred among myself, my collaborators, engineers, and patent counsel concerning the development, documentation, and protection of the expandable implant system. The communications cited below are representative examples of this ongoing activity.

70. During this period, work performed by my collaborators, engineers, and patent counsel relating to the expandable implant system occurred under my direction and as part of our ongoing effort to implement and protect the inventions described above.

A. Preparation of Drawings and Descriptions of Expandable Implant Embodiments

71. In November 2011, additional work was undertaken to prepare drawings and technical descriptions of expandable implant embodiments based on the designs that had previously been developed.

72. On November 11, 2011, Andy Moskowitz contacted Keith Yeager to assist in preparing electronic drawings and descriptions of expandable implant embodiments based on earlier design work. *See* Ex. 2043.

73. Prior to contacting Mr. Yeager, from late summer to early fall of 2011, Andy contacted at least five mechanical engineers via telephone to receive quotes relating to a project of converting the expandable device drawings into electronic drawings as part of our ongoing effort to further develop and document the expandable implant designs. Andy was not satisfied with the quality and/or pricing of these individuals, which led him to contact Mr. Yeager.

74. On November 13, 2011, Mr. Yeager was asked to prepare drawings and mechanical descriptions for multiple embodiments of expandable implant devices. Ex. 2044 at 1.

75. During the following weeks, communications continued regarding the preparation and refinement of these drawings and descriptions. By January 2, 2012, drawings and written descriptions of expandable implant embodiments,

including the wedge-driven embodiment, had been prepared and circulated for review. Ex. 2045. Exemplary images are shown below.

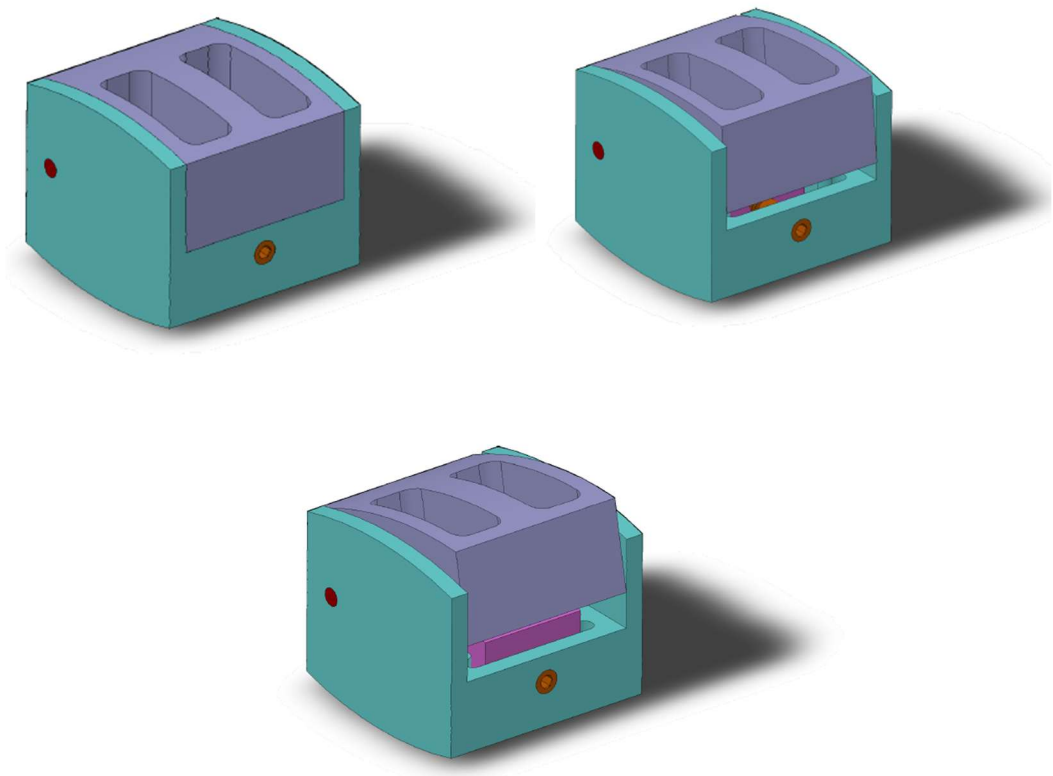

Id. at 8, 10, 16. The modified wedge embodiment was described as follows:

> The top and bottom housing are attached by two pins which allow rotation relative to each other about the axis of the pins. The bottom housing contains a mount for the lead screw, which can control the relative angular orientation of the two housing pieces. The lead screw is secured with two retaining rings. As the screw is rotated by an external tool (hex wrench), it causes lateral motion of a wedge-shaped translation nut. The nut engages the

> inner tapered surface of the top housing and forces the top housing piece to rotate away from the bottom housing.

Id. at 20.

76. These drawings illustrated structural features and mechanisms associated with expandable intervertebral implants and were prepared to assist with documenting and describing various embodiments of the expandable implant embodiments that had previously been developed.

77. During November and December 2011, over two dozen communications were exchanged among myself, Andy Moskowitz, Keith Yeager, and other collaborators regarding preparation and refinement of drawings and descriptions of expandable implant embodiments as part of the ongoing effort to develop and document the expandable implant system. The emails cited above are representative examples of these ongoing communications.

B. Refinement of Embodiment Descriptions, Claim Concepts, and Continued Prototyping Efforts

78. In early January 2012, I continued reviewing and discussing features of the expandable implant embodiments that had previously been developed, including their structural configuration and operation.

79. For example, communications addressed the inclusion of bone cavities in the expandable implant bodies to promote bone fusion after implantation. *See* Ex. 2046 at 2–3. After reviewing these drawings and

descriptions, I confirmed that the designs appeared consistent with the expandable implant embodiments that had previously been developed. *See id.* at 1.

80. During this same time period, discussions also took place regarding potential claim language and written descriptions for these embodiments in connection with preparing patent filings directed to the expandable implant designs.

81. In April 2012, we also explored options for fabricating additional prototypes of expandable implant embodiments based on the designs that had previously been developed.

82. For example, on April 11, 2012, Andy Moskowitz received an email from a machining company inquiring whether we had any projects they could quote. Ex. 2047. After receiving that inquiry, Andrew contacted the company by telephone to discuss potential fabrication of prototypes relating to expandable implant designs.

83. At that time we continued evaluating prototype fabrication options for expandable implant embodiments that had been previously designed as part of the ongoing effort to implement and evaluate those designs.

84. On August 17, 2012, I reserved the entire day for an internal meeting focused on our expandable implant prototype and related development work.

85. The purpose of the meeting was to review the expandable implant prototype, evaluate whether additional prototypes should be fabricated, discuss budgeting and resources for prototyping, and review patent figures and claim language relating to the expandable implant system and associated universal surgical tool in preparation for the patent application that was to be filed in October 2012. During this meeting we evaluated the structure and operation of the expandable implant design and the manner in which the implant could be inserted and actuated using the universal tool, discussed potential additional prototypes, and reviewed drawings and patent materials describing expandable implant embodiments and related surgical instrumentation that had previously been developed. These activities were undertaken as part of our continued effort to implement, evaluate, and document the expandable implant system—including both the implant embodiments and the associated universal surgical tool—in preparation for the patent application that was ultimately filed in October 2012.

86. I arranged for another physician to cover my emergency room duties that day so that I could devote the entire day to this work without interruption.

87. The only contemporaneous documentation of this meeting is my handwritten calendar entry reflecting that the day was reserved for "prototype" work and that emergency room coverage was reassigned (abbreviated as "U for

M," meaning Dr. Uscinski for Dr. Moskowitz) so that I would not be disturbed. Ex. 2048.

88. During this meeting, we conducted an in-person review and evaluation of the prototype device for purposes of three-dimensional visualization, sizing, and evaluation of the structural configuration and operation of the expandable implant design. We also evaluated how the implant prototype would be inserted and actuated using the universal surgical tool we had been developing, including consideration of how the implant and tool would function together in a spine model environment for visualization of placement, trajectories, and sizing. We did not create photographs or other documentation of the evaluation, and we did not perform destructive or high-risk testing because we had only one expensive prototype device and sought to avoid damaging it.

89. Throughout 2012, I continued communicating with collaborators and counsel regarding the expandable implant designs and their protection through patent filings.

C. Preparing and Prosecuting Applications Directed to the Expandable Implant System

90. During this same period, I continued working with patent counsel, Mr. John Dresch regarding prosecution of the '543 application (Ex. 2026) which was directed to surgical tools for inserting and manipulating spinal implants,

including expandable implants. This work occurred as part of our broader effort to implement and protect the expandable implant system described above.

91. During spinal fusion procedures, specialized instruments are required to accurately position implants within the disc space and to actuate mechanisms that expand the implants once they are in place. Accordingly, the development of the expandable implants and the development of the associated implantation tools were closely related aspects of the same overall effort to improve spinal fusion technology.

92. In particular, certain expandable implant embodiments were designed to be expanded using a rotation mechanism that could be actuated by an external tool. In these designs, the implant included an internal expansion mechanism that could be driven by a rotation element accessible from outside the implant.

93. To facilitate this functionality, I developed concepts for a universal surgical tool capable of both positioning the implant within the disc space and actuating the implant's expansion mechanism once the implant had been inserted. During the development process, I considered how the tool could be configured to engage a variety of expandable implant embodiments while allowing controlled actuation of the implant's expansion mechanism.

94. The tool concepts described in the ’543 application included instruments capable of gripping spinal implant devices and transmitting rotational force to an internal adjustment mechanism of the implant.

95. For example, the tool assembly described in that application included a driver assembly capable of engaging a screw or adjustment mechanism associated with an expandable or non-expandable implant device. Ex. 2026 at 28-29, ¶¶ [0032] (original specification); *id*. at 47-50 (original claims 16, 17, and 25, reciting tools for manipulating expandable and non-expandable devices); *id.* at 48 (original claim 17, reciting a manipulating tool including “a key for controlling an adjustment device which controls the height of the self-drilling bone fusion screw apparatus”); *id*. at 113-126 (new claims 26 to 76 reciting tools for manipulating expandable and non-expandable devices) (new claims 31, 32, 34-39, 46-47, 49-54 reciting tools for manipulating expandable devices); *id*. at 114 (claim 31, reciting a manipulating tool with “an opening that receives and guides a key that controls an adjustment device which controls a height of the universal, intervertebral combination bone fusion spacer and self-drilling screw apparatus”).

96. The tool assembly could include components such as a handle, drive shaft, and drive bit for manipulating the implant mechanism. Ex. 2026 at 28-29, ¶¶ [0032]. For example, an Allen key could be used to expand the implant through the application of rotational force. *Id*. at 41 (“the Allen key 501 is screwed until

the box conforms perfectly to the height and depth of the space"). By using a common actuation interface, the same surgical instrument could be used to actuate multiple different expandable implant designs.

97. The tool application also described embodiments in which the tool could engage an implant through engagement features such as slots or indentations on the implant body. Ex. 2026 at 36, ¶¶ [0069]-[0070] (original specification); *id*. at 47-48 (original claim 16); *id*. at 113-126 (new claims 26, 27, 28, 29, 41, 43, 44, 74, 75, and 76, reciting prongs to engage the device, for example, via slots on the intervertebral cage); *id*. at 113 (new claim 26, reciting a manipulating tool with "a gripper … having a plurality of prongs, wherein a distal end of each of the plurality of prongs engages a respective slot or indentation of the intervertebral cage.").

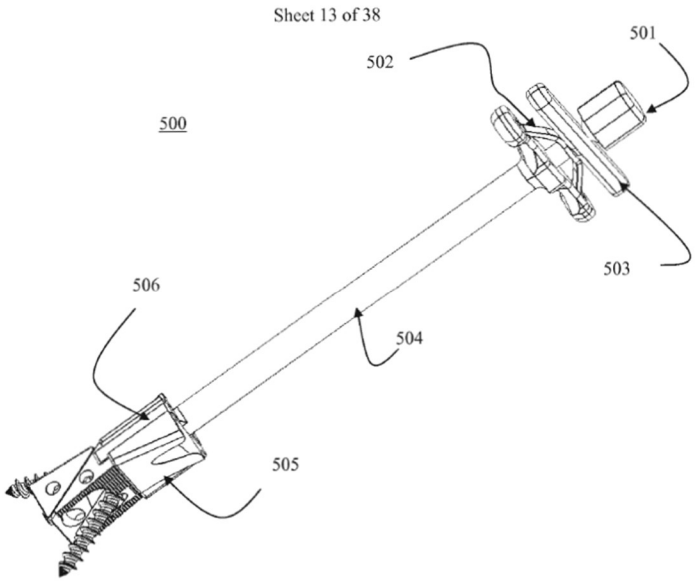

Ex. 2026 at 64 (Fig 5A).

98. In my development work, the implantation tool and the expandable implants were considered together as parts of an integrated surgical system. The same tool could be used to insert an implant into the disc space and to actuate the implant's expansion mechanism once the implant had been positioned.

99. Because the universal tool was designed to insert and actuate the expandable implants described above, prosecuting the tool patent application was part of the ongoing effort to implement, document, and obtain patent protection for the expandable implant system and the mechanisms used to actuate the implant embodiments.

100. At the time, I believed it was important to determine whether strong patent protection could be obtained for the universal implantation tool before filing additional patent applications directed specifically to expandable implant embodiments that relied on that tool.

101. Throughout this period, work relating to the expandable implant system continued on a reasonably continuous basis, including development of implant designs, prototype discussions, and coordination with patent counsel regarding patent protection for the surgical system that included both the implants and the universal insertion tool.

102. On February 1, 2012, I received an Office Action relating to the tool application and began working with Mr. Dresch to prepare a response and arrange an interview with the examiner. *See* Ex. 2049.

103. During February and March, I continued to communicate with counsel regarding preparation for an interview with the patent examiner concerning the application. On March 12, 2012, I attended an in-person interview with Mr. Dresch and the examiner. *See* Ex. 2050.

104. During the interview, the examiner indicated that claims directed to the use of the universal tool with expandable implant devices would likely be subject to restriction if they were maintained in the application. Ex. 2026 at 210-11. Consistent with that discussion, an amendment was filed on March 21, 2012, canceling those claims so that prosecution could proceed efficiently. *Id.* at 218-221. The tool described in that application was designed to engage and actuate spinal implants, including expandable implant embodiments such as those described above, and my work with counsel to pursue allowance of the tool application remained part of the broader effort to develop and protect the expandable implant system and the surgical instruments used to implant and actuate those devices.

105. In March 2012, after the examiner interview, I provided counsel with draft text and figures describing expandable implant embodiments that could be

actuated using the universal tool in preparation for a patent application directed to those embodiments.

106. At that time, I began preparing written descriptions and figures describing expandable implant embodiments that could be inserted and actuated using the universal tool. Although I considered filing a separate patent application directed to those embodiments earlier, I believed it was critical to first determine whether the universal tool application would be allowed because the tool was an integral part of the overall expandable implant system.

107. Throughout the spring of 2012, I remained actively involved in communications with counsel regarding responses to Office Actions and potential claim amendments relating to the tool application. Counsel indicated that the application was being actively pursued and prioritized as part of our broader effort to obtain protection for the expandable implant system, including the associated universal tool.

108. These communications included reviewing prior art references identified by the examiner, preparing technical explanations distinguishing the references, and discussing potential claim amendments.

109. On June 11, 2012, well before the July 24, 2012 deadline, a response to an Office Action was filed in the tool application after consultation between myself and counsel. Ex. 2026 at 443-47.

110. Additional communications and discussions occurred throughout the summer of 2012 concerning further amendments and potential examiner interviews.

111. On August 28, 2012, counsel conducted an interview with the examiner regarding the application, after which an amendment was prepared and filed on August 31, 2012. Ex. 2026 at 500; *id*. at 472-95.

112. During the spring–summer 2012 period, I exchanged dozens of emails and other communications with patent counsel regarding the tool application and the expandable implant system, including reviewing prior art cited by the examiner, discussing potential claim amendments, and preparing responses to Office Actions.

113. On September 13, 2012, the United States Patent and Trademark Office issued a Notice of Allowance for the tool application.

114. Immediately after receiving the Notice of Allowance for the tool application, I communicated with counsel regarding preparation of a patent application directed to expandable implant embodiments that were part of the same overall implant system, stating "[w]e have to start working on the Continuation as we discussed earlier." *See* Ex. 2051.

115. On September 25, 2012, Mr. Sugalski emailed Andy asking if he could feature the expandable fusion device on his company website. Andy

responded that they were currently working on patenting the past projects Mr. Sugalski and Andy had worked on together, but the application was not yet filed. *See* Ex. 2052.

116. On several occasions in September and October 2012, I participated in teleconferences with prosecution counsel to discuss prosecution strategy for the expandable implant system.

117. Following the continued development and documentation of expandable implant embodiments and related surgical instrumentation, a provisional patent application disclosing multiple embodiments of expandable intervertebral implants along with a universal tool capable of inserting and actuating those implants was filed on October 25, 2012. Ex. 2053.

118. The work described above relating to the universal surgical tool and the expandable implant embodiments occurred as part of a single, integrated effort to develop, implement, and protect the expandable implant system. These activities—including prototype evaluation, preparation of drawings and descriptions, and work with patent counsel—were directed toward implementing the expandable implant embodiments and ultimately resulted in the filing of the October 25, 2012 provisional patent application.

E. Summary

119. From the time the expandable implant embodiments were conceived in May 2011 until the provisional application was filed on October 25, 2012, my collaborators and I continued working to develop, document, evaluate, and protect the expandable implant system and associated surgical tools.

120. During the period between late 2011 and October 2012, I remained actively involved in the development, documentation, evaluation, and protection of expandable implant systems and associated surgical tools, and work relating to these inventions occurred on a reasonably continuous basis.

121. This work included further development and documentation of expandable implant embodiments, preparation of drawings and descriptions of those embodiments, prototype evaluation and development discussions, and continued work with patent counsel to secure patent protection for the related surgical instrumentation and implant systems.

122. The communications and activities described above are representative examples of the work performed during this period. In addition to those examples, many additional emails and communications occurred reflecting continued work on the development, documentation, and patent protection of the expandable implant system and related inventions.

123. These efforts ultimately culminated in the filing of the October 25, 2012 provisional patent application, which disclosed multiple embodiments of the expandable implant system described above.

VI. Professional Responsibilities During the Relevant Time Period

124. During the time period discussed above, I was actively practicing as a neurosurgeon and maintained a demanding clinical and surgical schedule.

125. My medical practice included treating patients at multiple locations, including offices in Rockville, Frederic, and Olney, Maryland, and performing surgeries and procedures in a hospital and at an outpatient surgical center. *See, e.g.*, Ex. 2054.[2]

126. During this period, I also maintained emergency room coverage responsibilities. I was typically on emergency room call approximately one-third of each month, which required me to be available to treat emergency neurosurgical patients at any time, including nights and weekends. *See* Ex. 2055. Indeed, many surgeries were performed on nights and weekends. These surgeries are not

[2] Patient-identifying information has been redacted from this Exhibit to comply with patient privacy laws. The substance of the redacted information is not relevant to the merits of this case.

reflected in my calendars, as these emergencies were taken by phone and were not recorded in advance.

127. In addition to my clinical responsibilities, I regularly traveled to Baltimore, Maryland to participate in academic activities at Johns Hopkins University, including weekly Grand Rounds meetings and monthly morbidity and mortality conferences.

128. These professional responsibilities required significant time commitments and frequent travel between medical facilities and often involved unpredictable scheduling due to emergency patient care responsibilities.

129. Despite these obligations, I continued to devote time on a reasonably continuous basis to the development of spinal implant technology and related surgical tools.

130. Much of this work occurred outside of my clinical schedule, including evenings and other available time between patient care responsibilities and travel between medical facilities.

131. As described above, these efforts included coordinating with engineers and collaborators regarding device designs, reviewing drawings and descriptions of expandable implant embodiments, participating in discussions regarding prototype development and evaluation, and working with patent counsel

regarding preparation and prosecution of patent applications relating to these inventions.

132. During the relevant period, I also personally funded the development of prototype devices and the preparation and prosecution of patent applications relating to the inventions described in this declaration, reflecting my continued commitment to developing and protecting these technologies.

133. Even during periods when my clinical responsibilities limited the amount of time I could personally devote to these efforts, work relating to the expandable implant system continued through communications with collaborators, engineers, and patent counsel, all of whom were working with me and under my direction as part of our ongoing effort to develop, document, and protect the expandable implant system described above.

VII. Disclosure of the Expandable Implant Invention in the October 25, 2012 Provisional Application

134. On October 25, 2012, a provisional patent application was filed describing multiple embodiments of expandable intervertebral implant systems and a universal surgical tool used to insert and expand the implants that had been developed during the preceding period. The application was assigned Provisional Application No. 61/718,707. Ex. 2053.

135. The provisional application describes several different mechanical mechanisms that could be used to expand the implants after insertion into the disc

space. These embodiments included, among others, mechanisms involving sliding structures, screw-driven expansion, scissor-jack mechanisms, tapered thread mechanisms, wedge-driven expansion mechanisms, and worm drive mechanisms. *See id*. ¶¶ [0019–0037].

136. The provisional application explained that the expandable implants could be used as intervertebral spacer devices capable of controlled expansion within the disc space to achieve spinal distraction and facilitate spinal fusion. *See id*. ¶¶ [0003–0006], [0009].

137. The provisional application describes expandable spinal implants that include multiple structural body components forming an implant configured to be positioned between adjacent vertebral bodies.

138. For example, the specification describes expandable devices with top and bottom housings that engage adjacent vertebrae and cooperate with one another to form the expandable implant structure. These housing portions function as structural bodies of the implant that cooperate with one another during expansion. *See id.* ¶¶ [0021–0037].

139. For example, the specification describes a top housing and bottom housing that translate or rotate relative to one another during expansion of the device. *Id*.

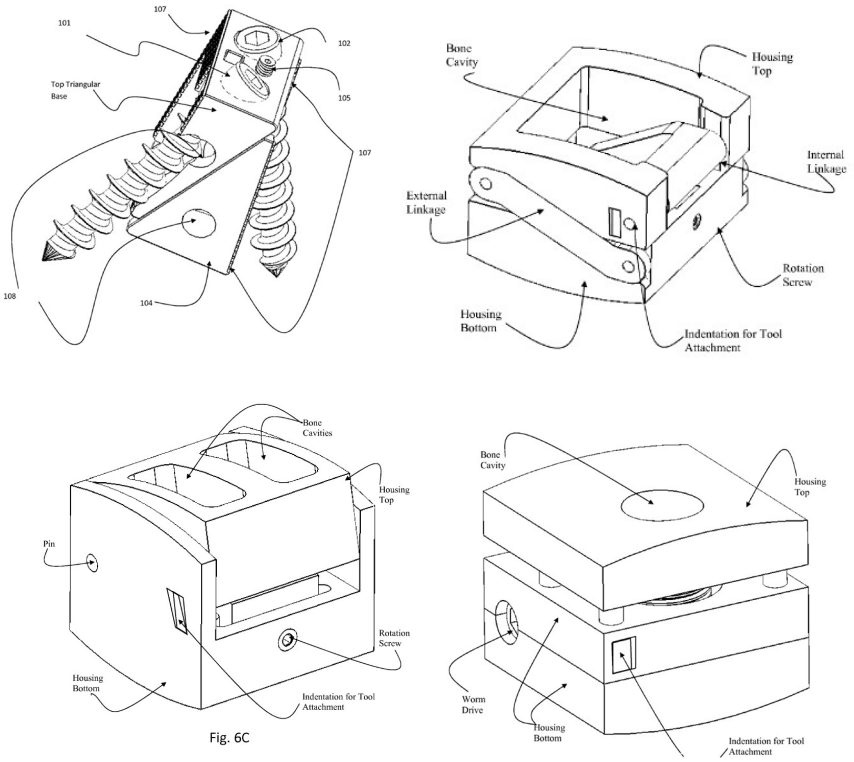

Fig. 6C

See id. at Figs. 1–7.

140. The specification also describes ridged external surfaces on the implant bodies configured to engage vertebral bodies. *Id.* ¶¶ [0023], [0026], Figs. 1A-2D.

141. The provisional application also discloses embodiments in which a wedge-shaped component positioned between the housing portions causes expansion of the implant as the wedge moves relative to the housing portions. *See id*. ¶¶ [0034–0035].

142. For example, the specification explains that a wedge-shaped translation component having an angled surface engages a corresponding tapered

or angled interior surface of the implant housing, causing relative movement between the housing portions as the wedge translates.

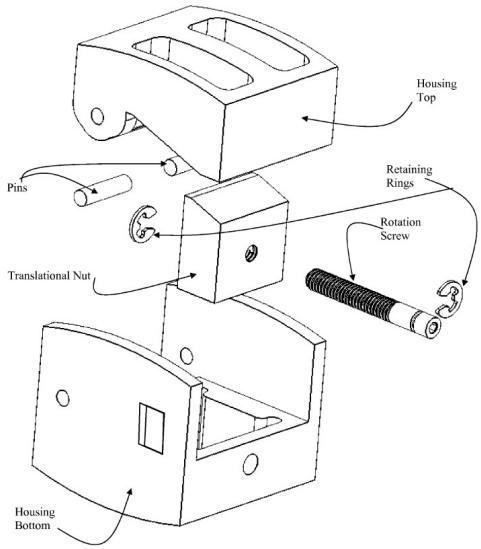

Fig. 6D

See id. ¶¶ [0034–0035]; Figs. 6A–6D.

143. The provisional application explains that movement of the wedge element as it slides or translates causes the housing portions to pivot relative to one another and expand the implant from a compressed configuration to an expanded configuration. *See id.* ¶ [0035].

144. The drawings and description of this embodiment illustrate a structural arrangement in which a wedge element positioned between cooperating housing portions moves along a defined path substantially parallel to the vertebral body engagement surface and interacts with an angled internal surface of the implant housing in response to turning a rotation screw to generate controlled

expansion of the implant after insertion into the disc space. *See id.* ¶¶ [0034–0035]; Figs. 6A–6D.

145. The provisional application also describes that the implant bodies include cavities configured to receive bone graft or other fusion materials to promote spinal fusion. *See id.* ¶¶ [0004]–[0005], [0010], [0013], [0029], [0031], [0033], [0035], [0037], [0045]–[0046].

146. The provisional application further describes a universal surgical tool capable of inserting the expandable implant into the disc space and actuating the implant's expansion mechanism.

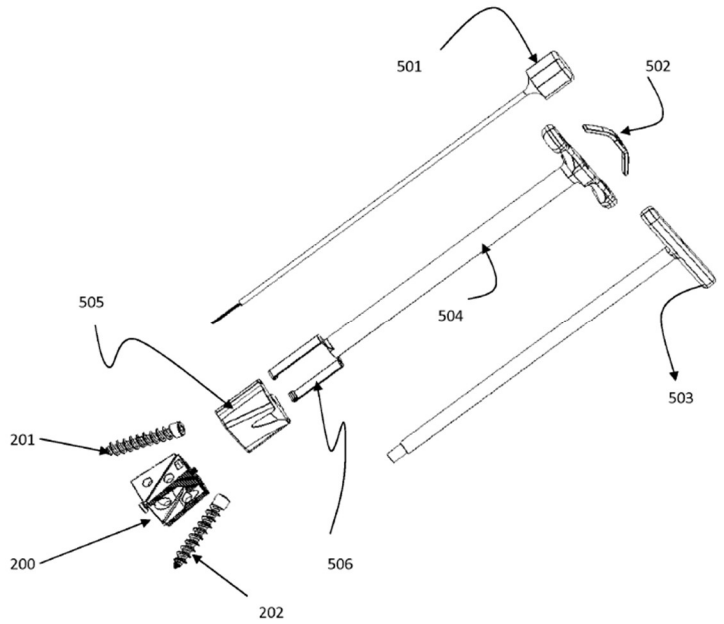

See id. ¶¶ [0003], [0007], [0010], [0038]–[0048]; Figs. 8A–8C, 8F–8H.

147. The tool described in the provisional application included components capable of engaging the implant and transmitting rotational force to internal

adjustment mechanisms of the implant in order to cause expansion of the device once it had been positioned in the intervertebral space. *Id*.

148. The provisional application explained that the same universal tool could be used to implant and actuate multiple expandable implant embodiments described in the application. *See id*. ¶¶ [0038]–[0048].

149. Based on the disclosures contained in the October 25, 2012 provisional application, a person of ordinary skill in the art of spinal implant design would have understood how to make and use the expandable implant embodiments described in the application, including embodiments utilizing wedge-based expansion mechanisms and other expansion mechanisms disclosed in the application.

150. The filing of the October 25, 2012 provisional application therefore documented and disclosed the expandable implant systems and associated surgical tool that had been developed during the preceding period.

151. The expandable implant embodiments disclosed in the October 25, 2012 provisional application include embodiments utilizing wedge-based expansion mechanisms consistent with the designs that had been conceived and documented in engineering drawings and design discussions by May 3, 2011.

152. The embodiments disclosed in the October 25, 2012 provisional application correspond to the expandable implant designs that had been conceived

and discussed during the development work described above, including the wedge-based expandable implant embodiments reflected in the engineering drawings circulated on May 3, 2011. The October 25, 2012 provisional application therefore reflects the culmination of the development, documentation, and patent preparation work relating to the expandable implant system described above.

I declare under penalty of perjury under the laws of the United States of America that the foregoing is true and correct. Executed on March 9, 2026.

Dr. Nathan C. Moskowitz, M.D., Ph.D.