US007846188B2

(12) **United States Patent**
Moskowitz et al.

(10) **Patent No.: US 7,846,188 B2**
(45) **Date of Patent: Dec. 7, 2010**

(54) **BI-DIRECTIONAL FIXATING TRANSVERTEBRAL BODY SCREWS, ZERO-PROFILE HORIZONTAL INTERVERTEBRAL MINIPLATES, TOTAL INTERVERTEBRAL BODY FUSION DEVICES, AND POSTERIOR MOTION-CALIBRATING INTERARTICULATING JOINT STAPLING DEVICE FOR SPINAL FUSION**

(76) Inventors: **Nathan C. Moskowitz**, 212 N. Adams St., Rockville, MD (US) 20850; **Mosheh T. Moskowitz**, 212 N. Adams St., Rockville, MD (US) 20850; **Daniel Glozman**, 10 Rotem, Kefar Adummim (IL) 90618

(*) Notice: Subject to any disclaimer, the term of this patent is extended or adjusted under 35 U.S.C. 154(b) by 916 days.

(21) Appl. No.: **11/536,815**

(22) Filed: **Sep. 29, 2006**

(65) **Prior Publication Data**

US 2007/0049943 A1 Mar. 1, 2007

Related U.S. Application Data

(63) Continuation-in-part of application No. 11/208,644, filed on Aug. 23, 2005, now Pat. No. 7,704,279.

(60) Provisional application No. 60/670,231, filed on Apr. 12, 2005.

(51) **Int. Cl.**
A61B 17/88 (2006.01)

(52) **U.S. Cl.** **606/279**

(58) **Field of Classification Search** ... 623/17.11–17.16; 606/279, 301, 99, 300, 311, 312, 246, 247, 606/289; 227/175.1
See application file for complete search history.

(56) **References Cited**

U.S. PATENT DOCUMENTS

4,554,914 A 11/1985 Kapp et al.

(Continued)

FOREIGN PATENT DOCUMENTS

WO WO2004/093749 * 11/2004 ..... 623/17.11

(Continued)

OTHER PUBLICATIONS

Vincent C. Traynelis, "Prosthetics and Biologics: The Wave of the Future," Clinical Neurosurgery, vol. 50, Proceedings of the Congress of Neurological Surgeons, Philadelphia, PA 2002, Chapter 9, pp. 207-219.

(Continued)

Primary Examiner—Pedro Philogene
(74) *Attorney, Agent, or Firm*—Dresch IP Law, PLLC; John J. Dresch

(57) **ABSTRACT**

An apparatus and method for joining members together using a self-drilling screw apparatus or stapling apparatus are disclosed. The screw apparatus includes a worm drive screw, a spur gear and superior and inferior screws which turn simultaneously in a bi-directional manner. A rotating mechanism drives the first and second screw members in opposite directions and causes the screw members to embed themselves in the members to be joined. The screw apparatus can be used to join members such as bones, portions of the spinal column, vertebral bodies, wood, building materials, metals, masonry, or plastics. A device employing two screws (two-in-one) can be combined with a capping horizontal mini-plate. A device employing three screws can be combined in enclosures (three-in-one). The stapling apparatus includes grip handles, transmission linkages, a drive rod a fulcrum and a cylinder. The staple has superior and inferior segments with serrated interfaces, a teethed unidirectional locking mechanism and four facet piercing elements. The staples can be also be used to join members such as bones, portions of the spinal column, or vertebral bodies.

24 Claims, 18 Drawing Sheets

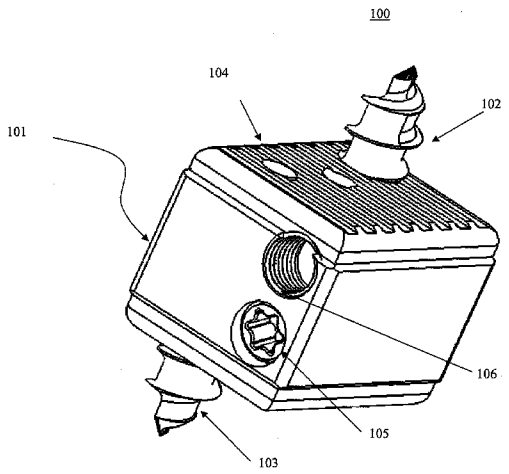

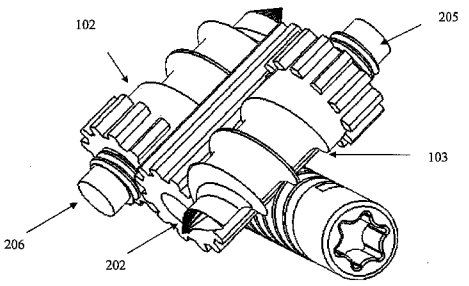

MEDTRONIC EXHIBIT 1053

U.S. PATENT DOCUMENTS

4,599,086	A	7/1986	Doty	
4,636,217	A *	1/1987	Ogilvie et al.	623/17.11
4,960,420	A	10/1990	Goble et al.	
4,997,432	A	3/1991	Keller	
5,062,850	A	11/1991	MacMillan et al.	
5,123,926	A	6/1992	Pisharodi	
5,290,312	A	3/1994	Kojimoto et al.	
5,514,180	A	5/1996	Heggeness et al.	
5,660,188	A	8/1997	Groiso	
5,667,472	A	9/1997	Finn et al.	
5,782,832	A	7/1998	Larsen et al.	
5,960,522	A	10/1999	Boe	
6,126,689	A	10/2000	Brett	
6,368,350	B1	4/2002	Erickson et al.	
6,375,682	B1	4/2002	Fleischmann et al.	
6,419,704	B1	7/2002	Ferree	
6,458,159	B1	10/2002	Thalgott	
6,527,804	B1	3/2003	Gauchet et al.	
6,533,818	B1	3/2003	Weber et al.	
6,572,653	B1	6/2003	Simonson	
6,579,318	B2	6/2003	Varga et al.	
6,582,468	B1	6/2003	Gauchet	
6,641,614	B1	11/2003	Wagner et al.	
6,719,794	B2	4/2004	Gerber	
6,723,126	B1 *	4/2004	Berry	623/17.11
6,733,532	B1	5/2004	Gauchet et al.	
6,764,491	B2	7/2004	Frey et al.	
6,770,094	B2	8/2004	Fehling et al.	
6,904,308	B2	6/2005	Frisch et al.	
6,953,477	B2	10/2005	Berry	
6,955,671	B2	10/2005	Uchikubo	
7,030,904	B2	4/2006	Adair et al.	
7,037,258	B2	5/2006	Chatenever et al.	
7,097,615	B2	8/2006	Banik et al.	
2002/0068977	A1	6/2002	Jackson	
2002/0143338	A1	10/2002	Orbay et al.	
2004/0088054	A1	5/2004	Berry	
2004/0177531	A1	9/2004	DiBenedetto et al.	
2004/0254644	A1	12/2004	Taylor	
2005/0027362	A1	2/2005	Williams et al.	
2005/0049590	A1	3/2005	Alleyne et al.	
2005/0177235	A1	8/2005	Baynham et al.	
2005/0216084	A1	9/2005	Fleischmann	
2005/0273170	A1	12/2005	Navarro et al.	
2005/0278026	A1	12/2005	Gordon et al.	
2007/0213820	A1	9/2007	Magerl et al.	

FOREIGN PATENT DOCUMENTS

WO	WO 2004/093749 A1	11/2004		
WO	WO2006/091503 *	8/2006		384/284
WO	WO 2006/091503 A1	8/2006		

OTHER PUBLICATIONS

E.K. Wai et al., "Disk Replacement Arthroplasties: Can the Success of Hip and Knee Replacements be Repeated in the Spine?," Seminars in Spine Surgery, vol. 15, No. 4 (Dec. 2003), pp. 473-482.

Richard D. Guyer et al., "Intervertebral Disc Prostheses," Spine Journal, vol. 28, No. 15S, Supp. To Aug. 1, 2003, pp. S15-S23.

Dieter Grob et al., "Clinical Experience With the Dynesys Semirigid Fixation System for the Lumbar Spine," Spine, vol. 30, No. 3, 2005, pp. 324-331.

International Search Report (ISR) and Written Opinion of the International Searching Authority, Dec. 3, 2007, International Application No. PCT/US 07/05005.

International Search Report (ISR) and Written Opinion of the International Searching Authority, May 21, 2008, International Application No. PCT/US2007/021015.

International Search Report (ISR) and Written Opinion of the International Searching Authority, Jul. 9, 2008, International Application No. PCT/US2007021013.

* cited by examiner

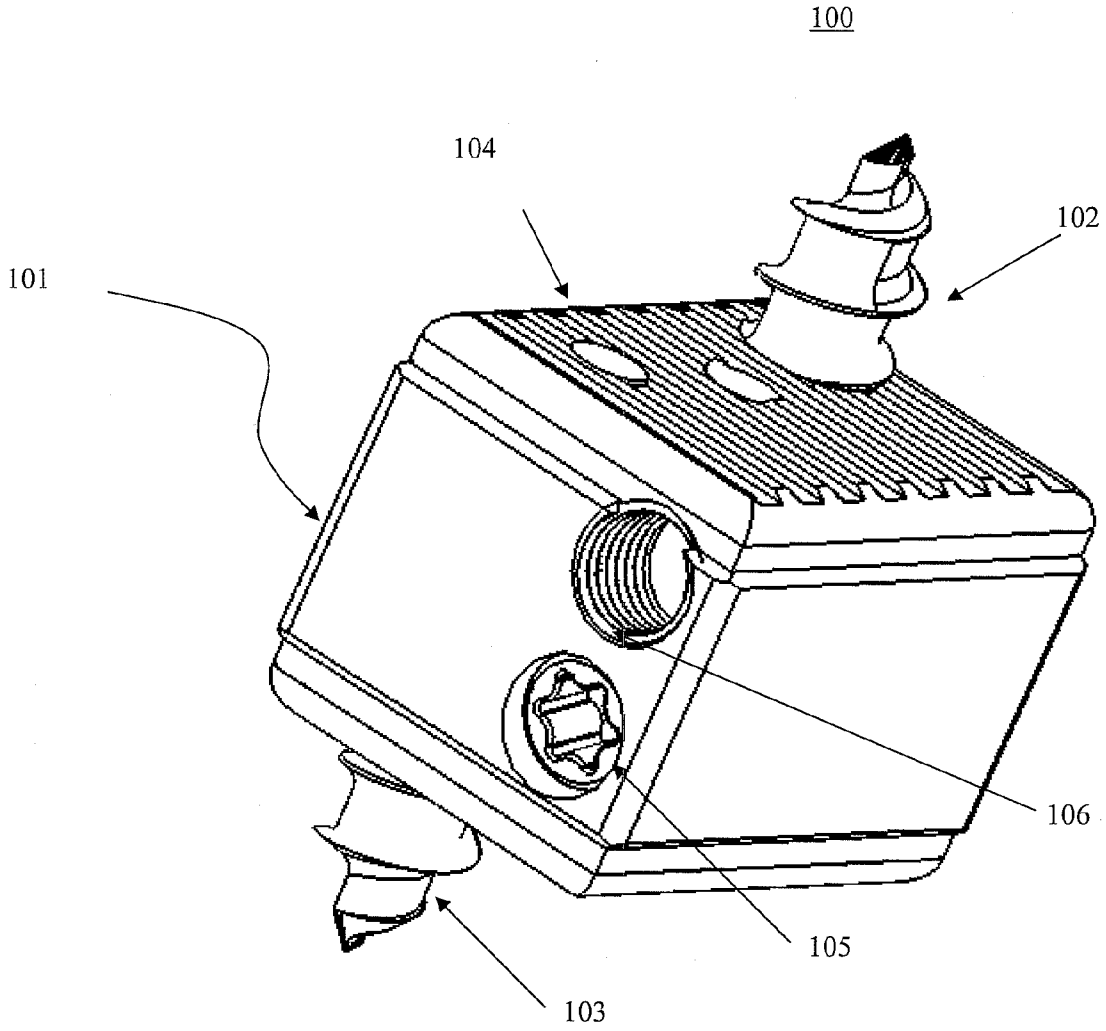

Fig. 1A

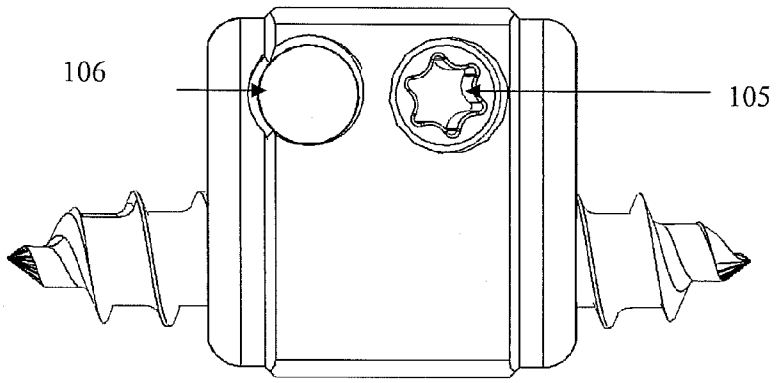

Fig. 1B

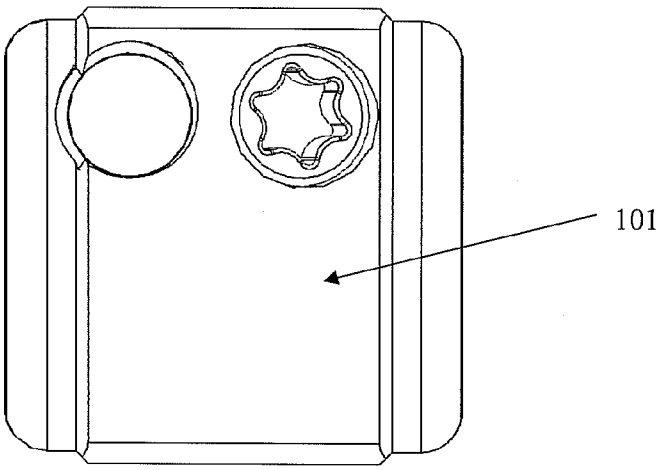

Fig. 1C

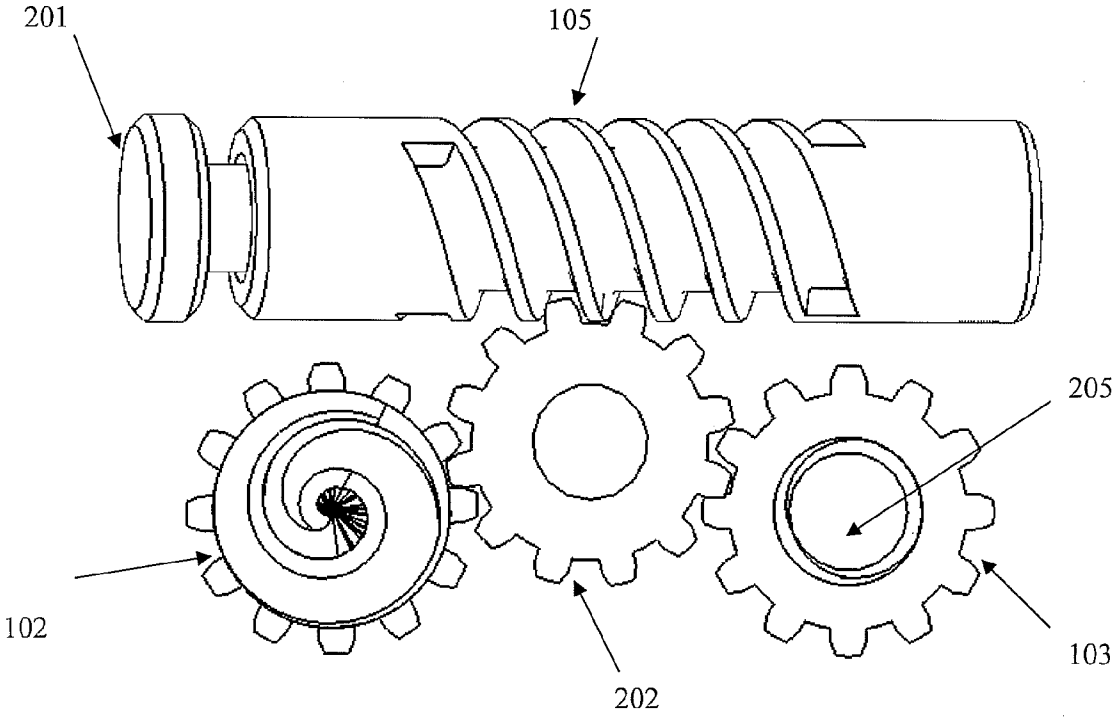

Fig. 2

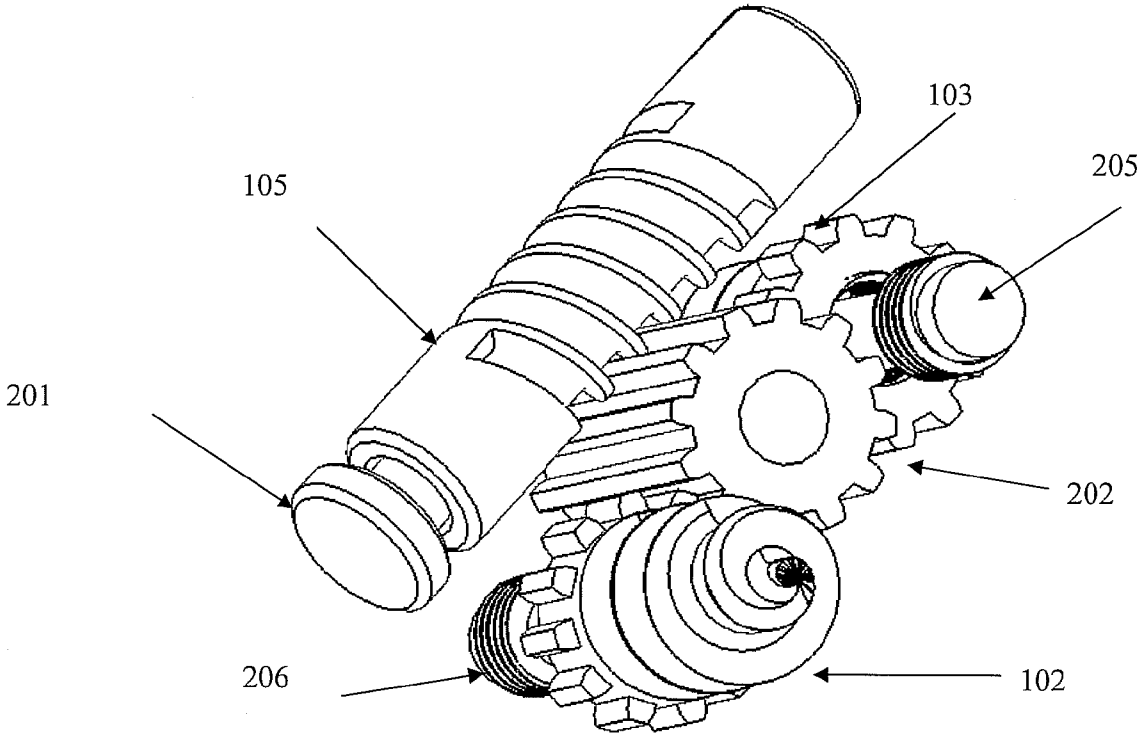

Fig. 3A

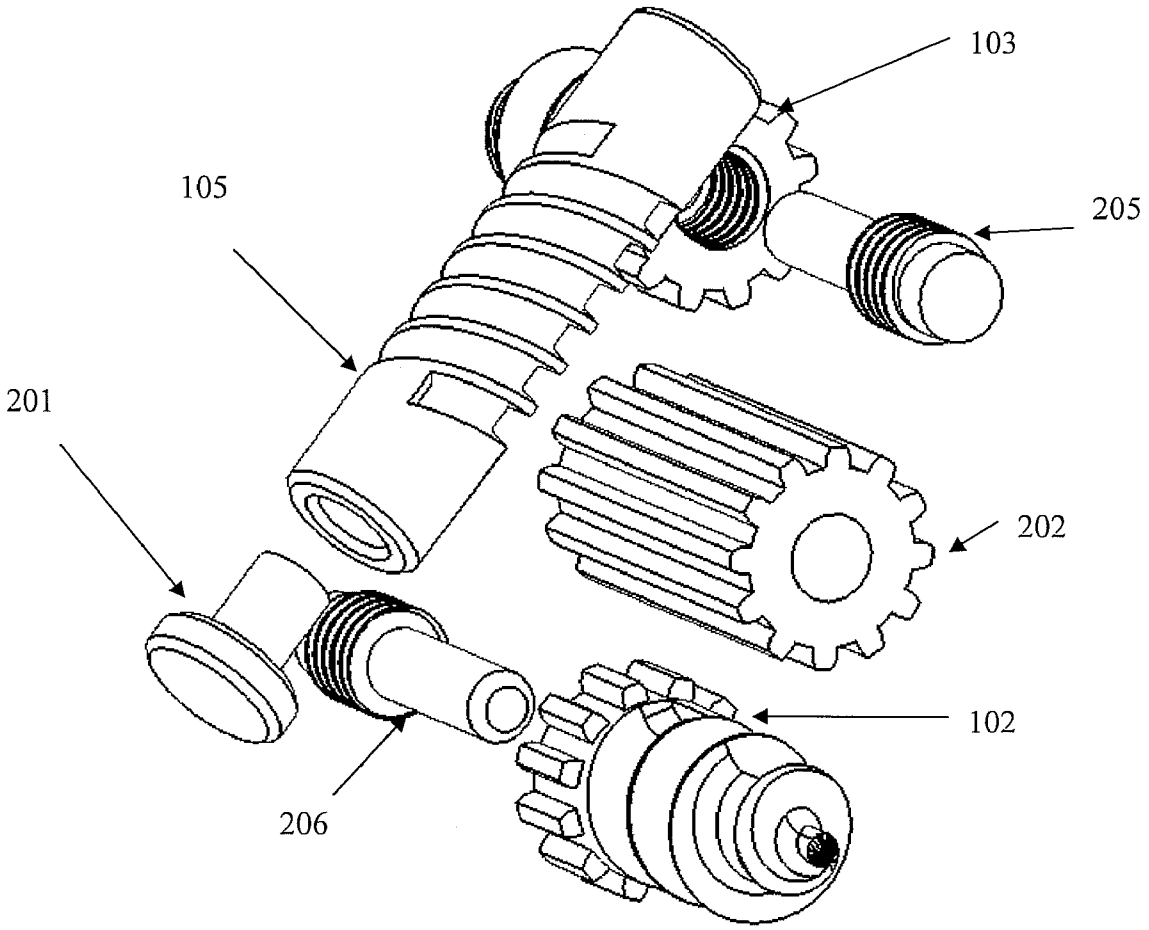

Fig. 3B

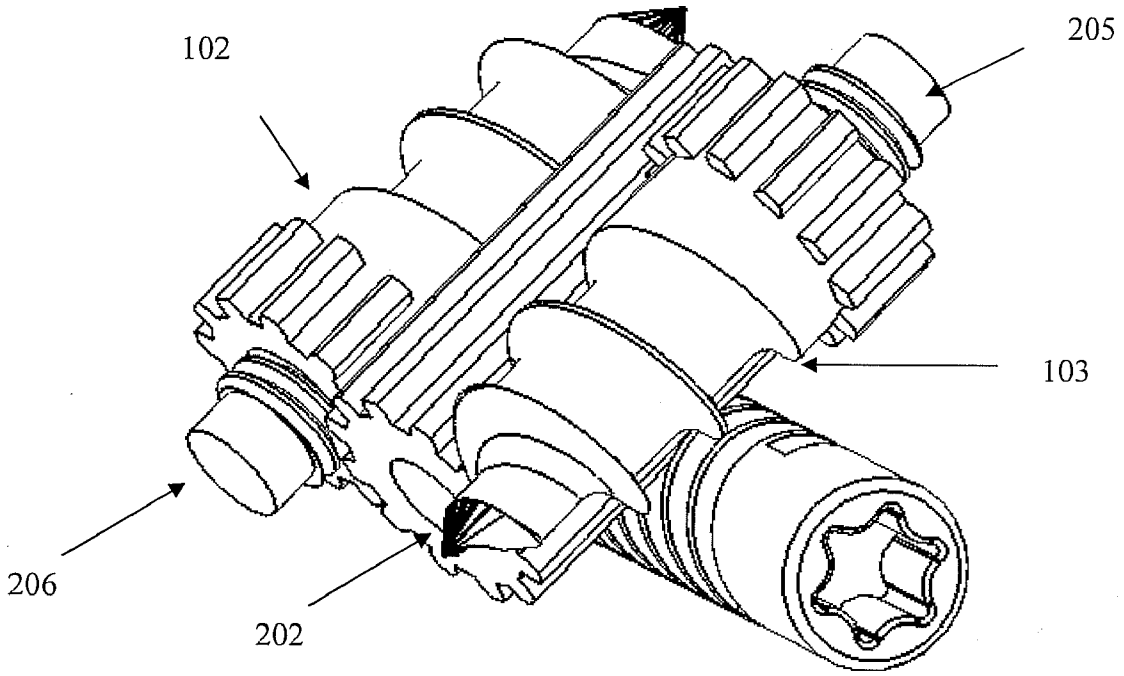

Fig. 4

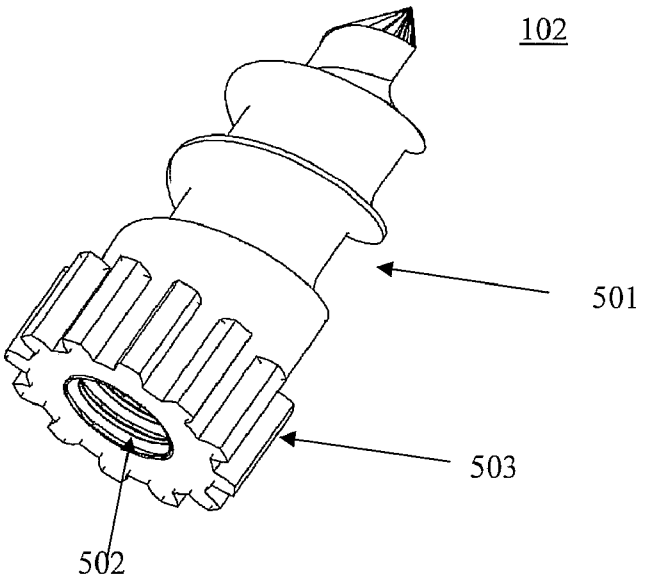

Fig. 5A

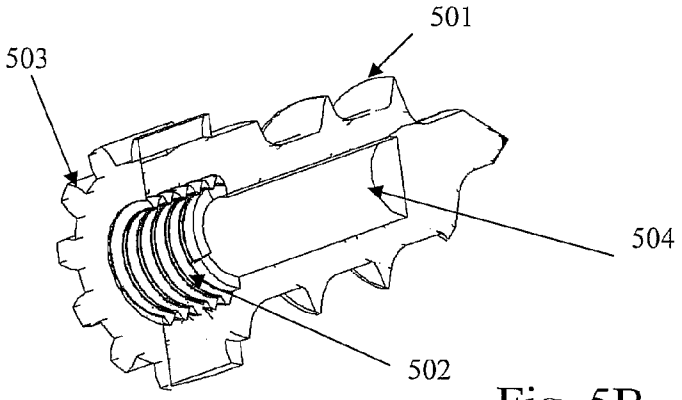

Fig. 5B

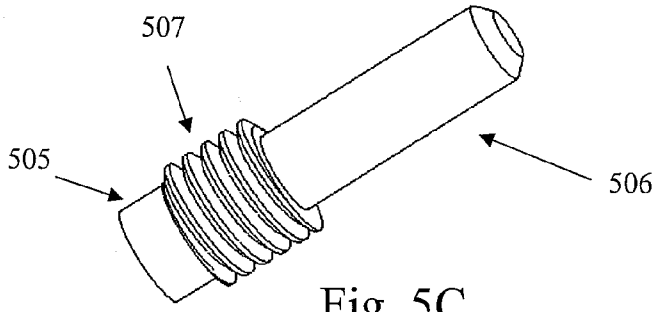

Fig. 5C

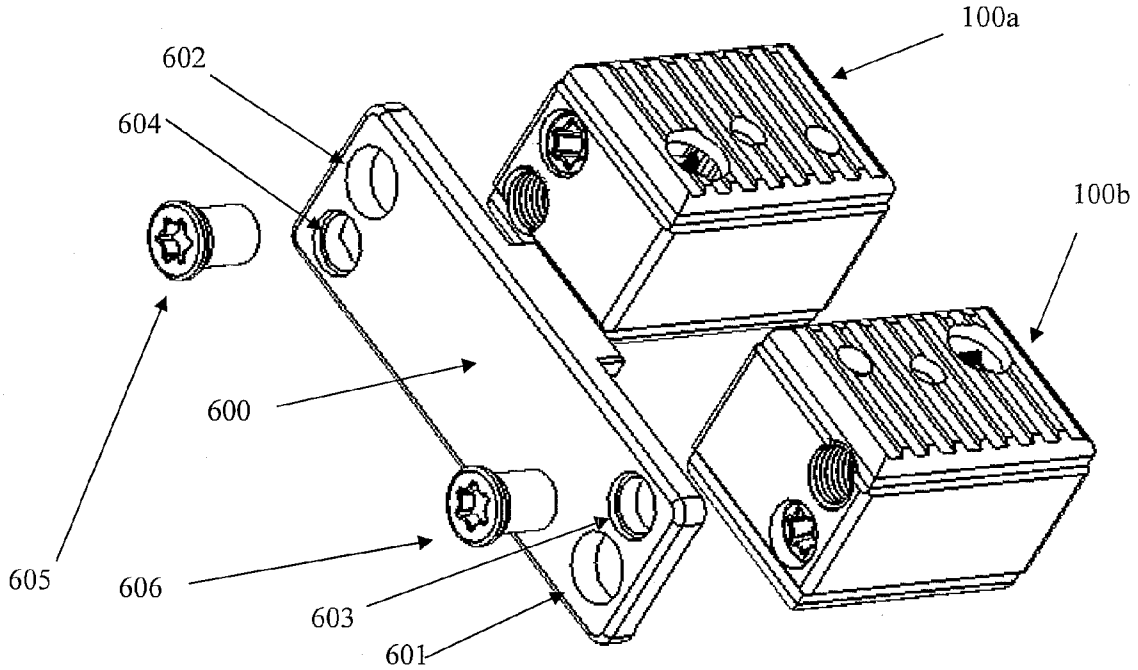

Fig. 6A

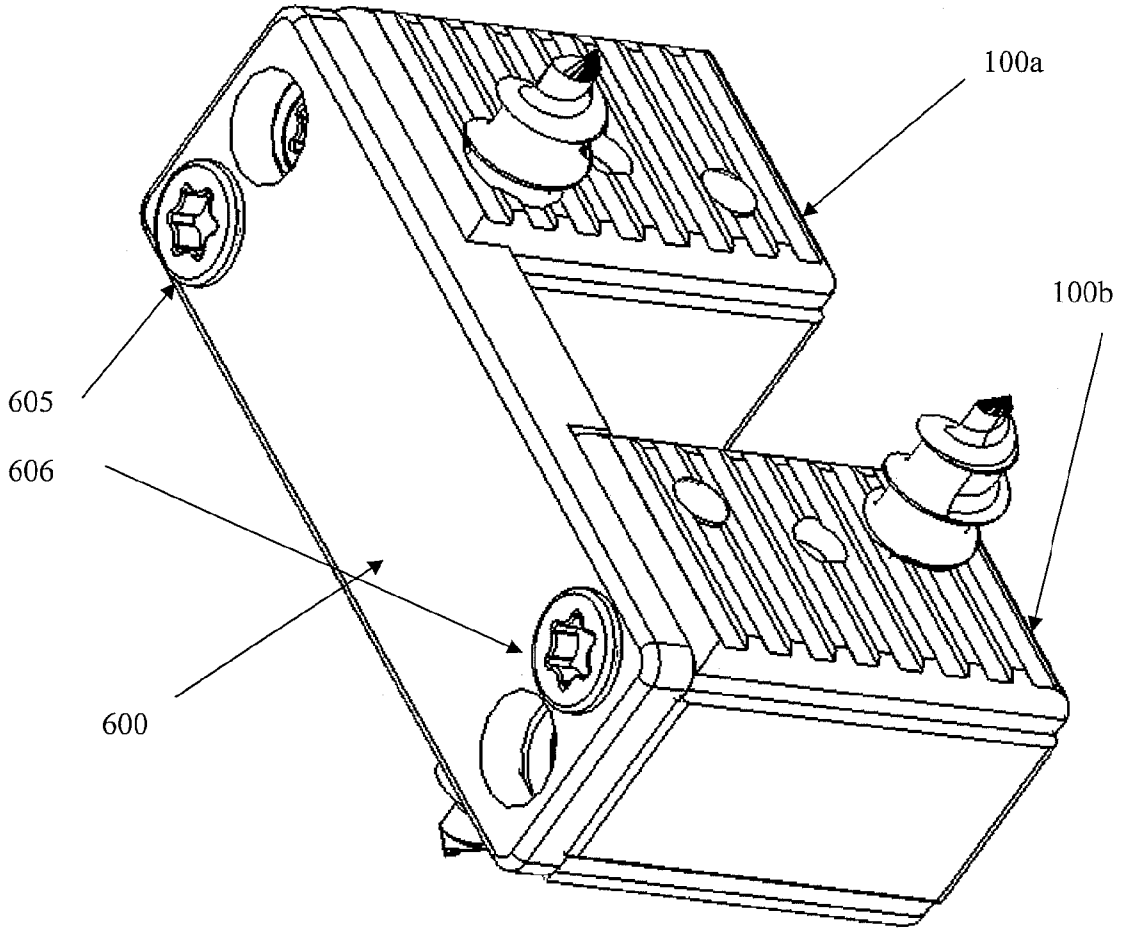

Fig. 6B

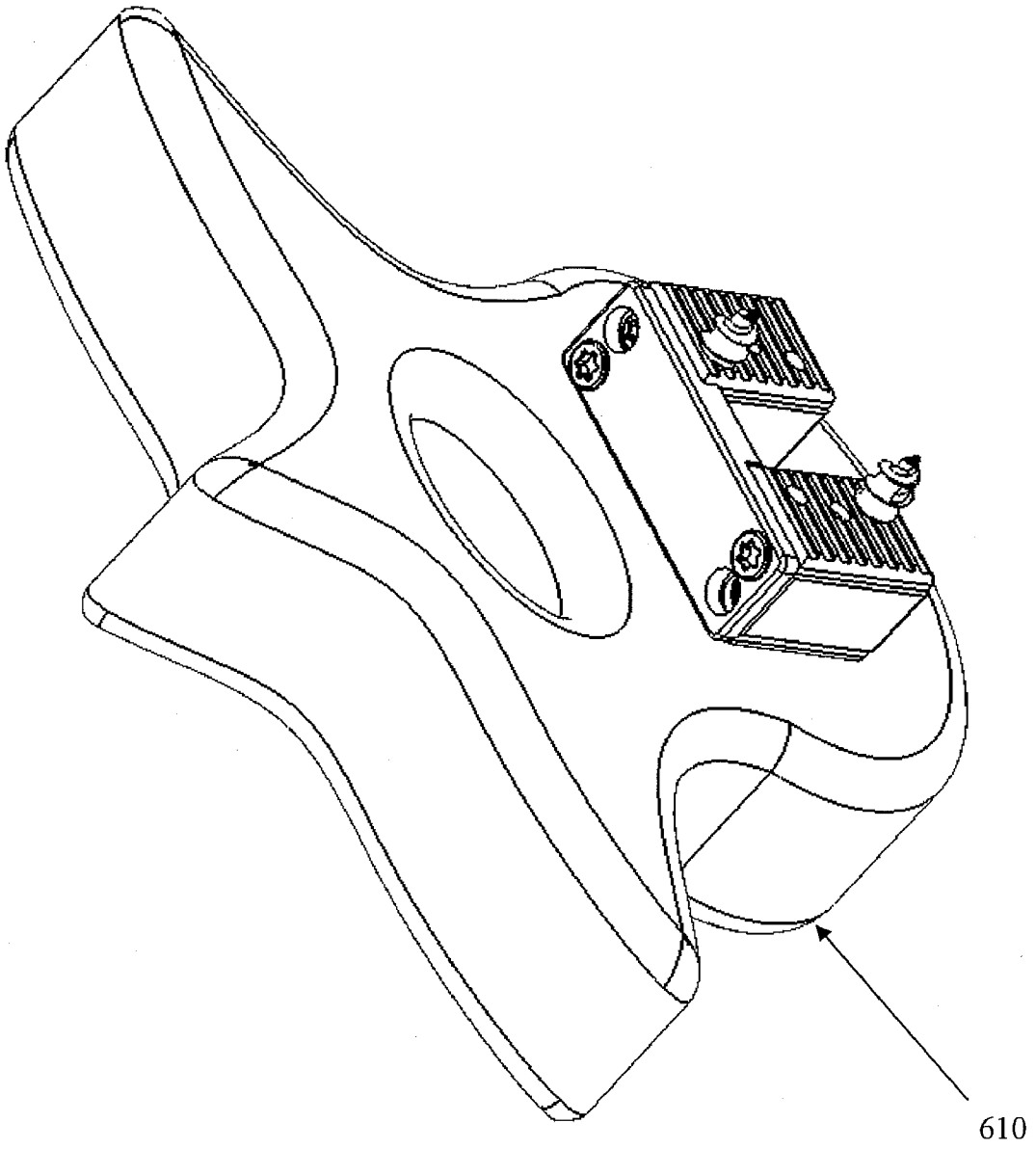

Fig. 6C

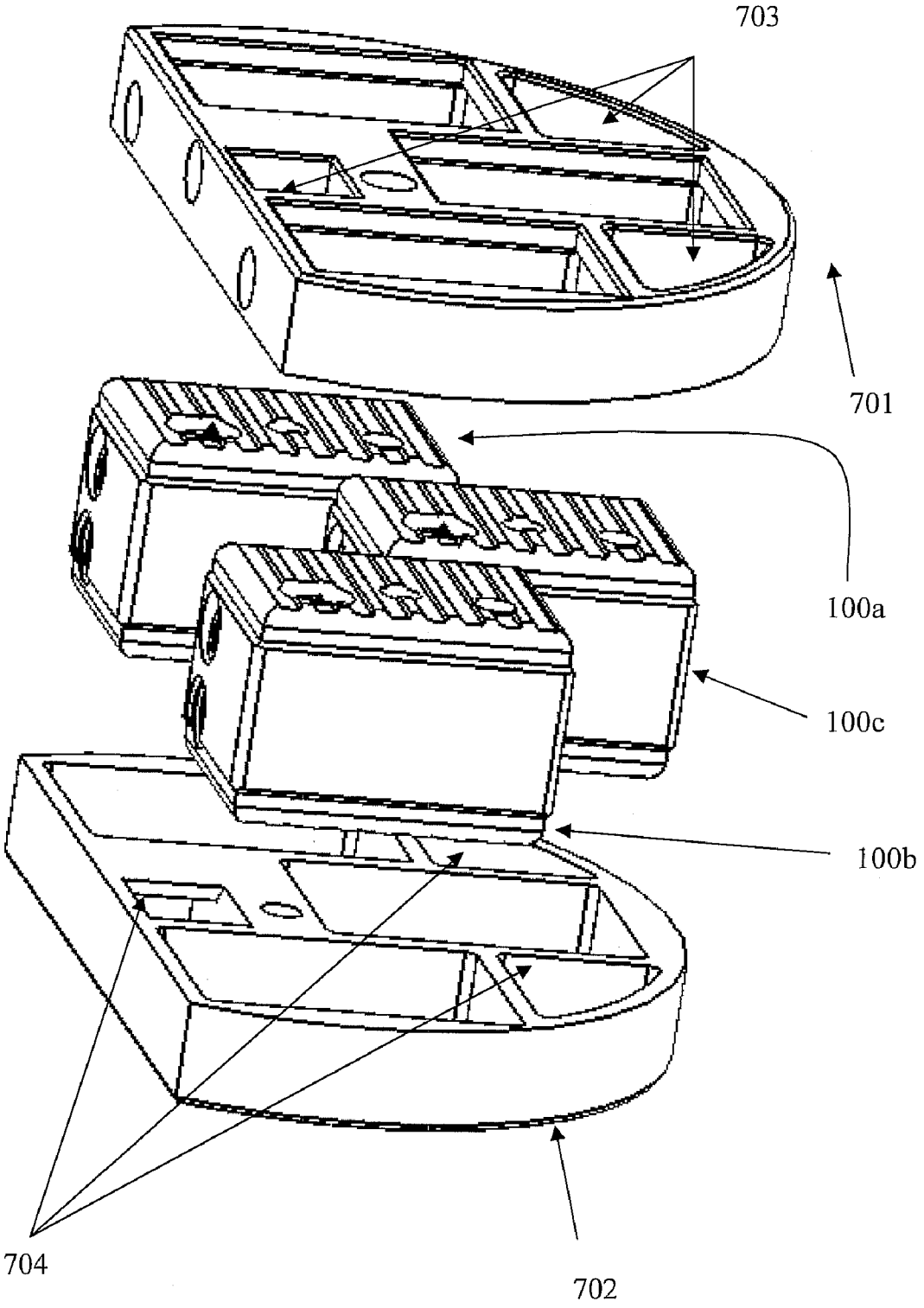

Fig. 7A

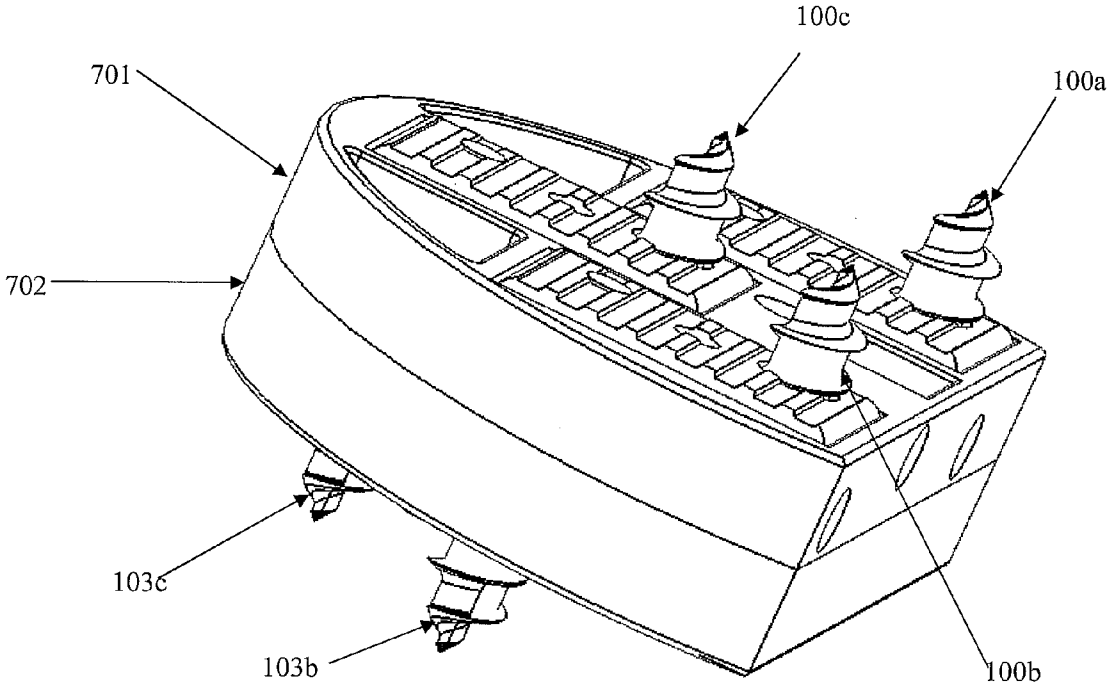

Fig. 7B

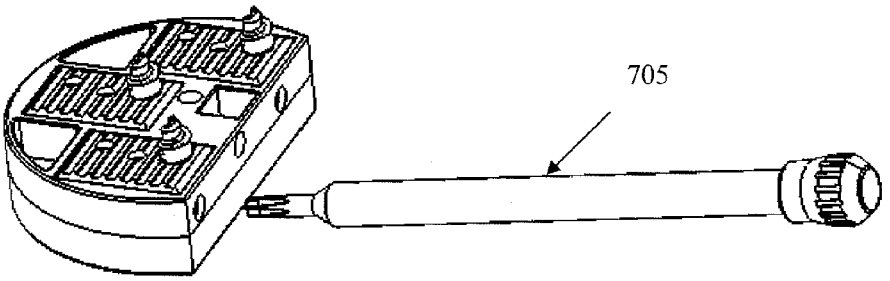

Fig. 7C

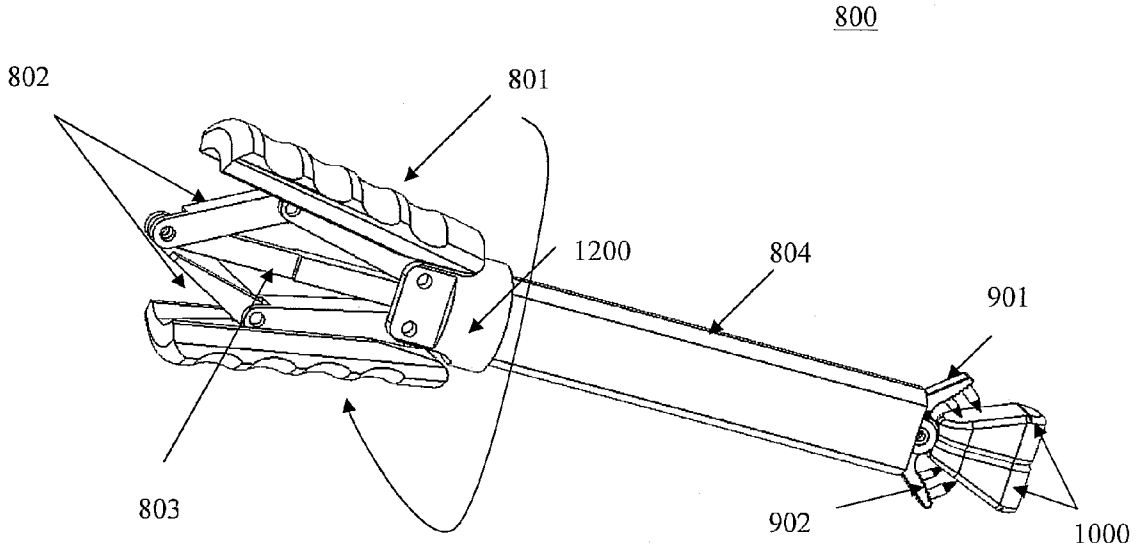
800
802
801
1200
804
901
803
902
1000

Fig. 8A

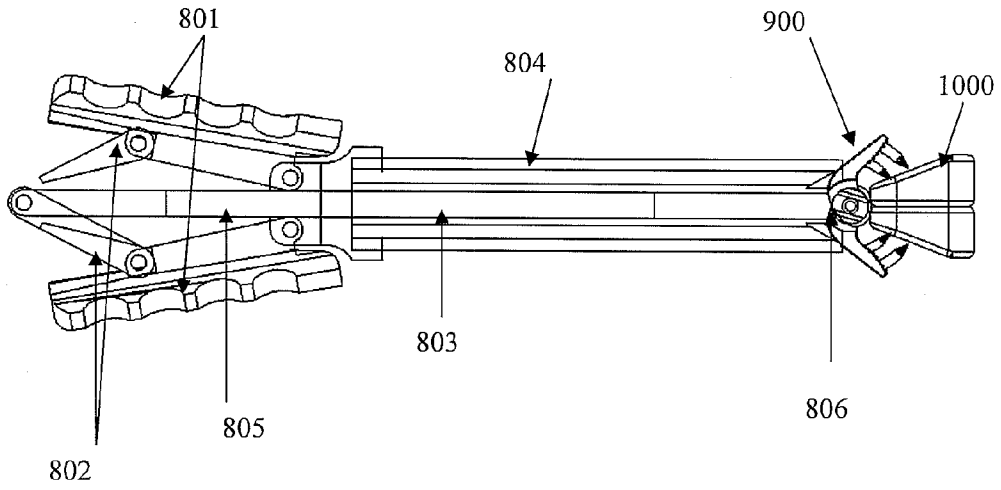
801
900
804
1000
803
806
805
802

Fig. 8B

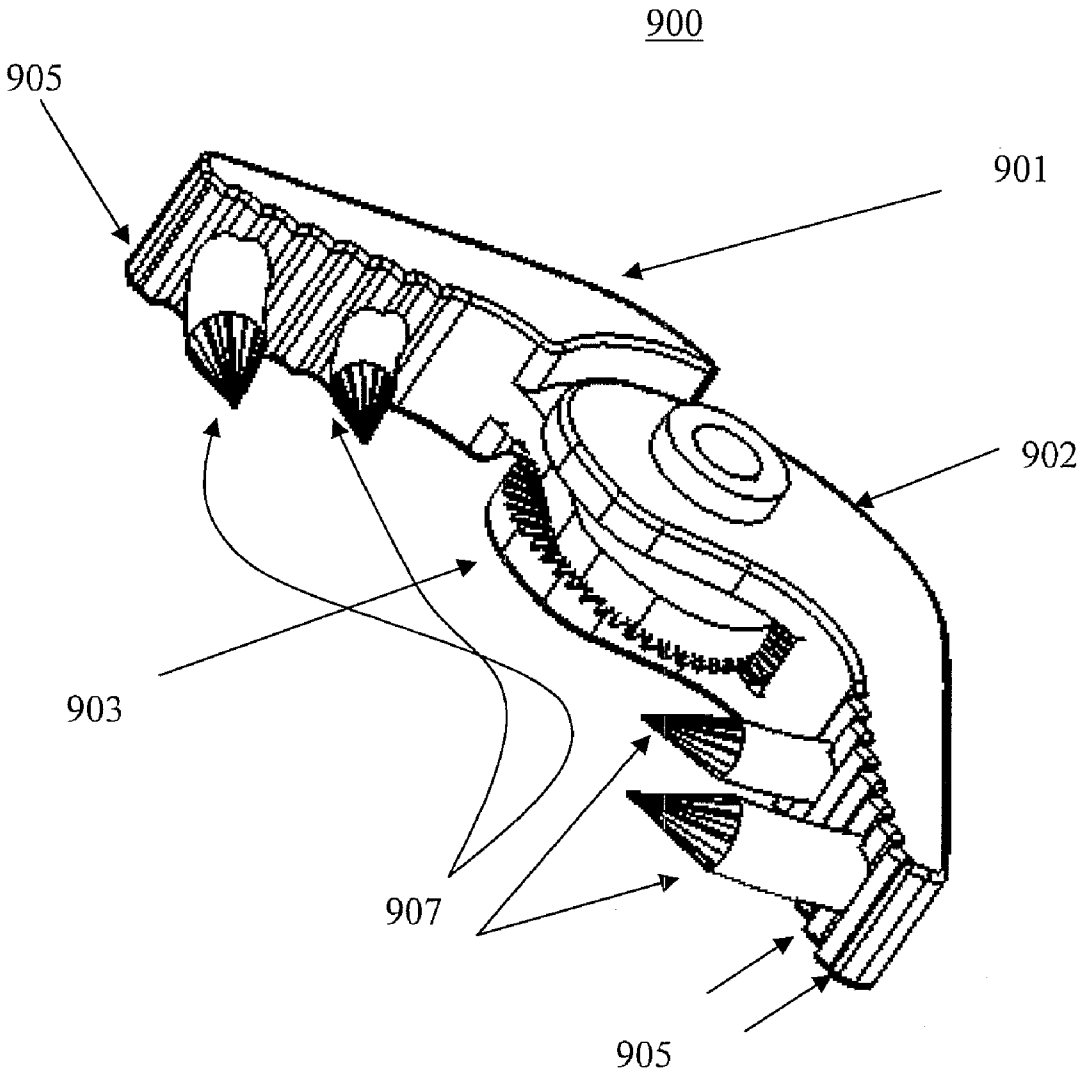

Fig. 9A

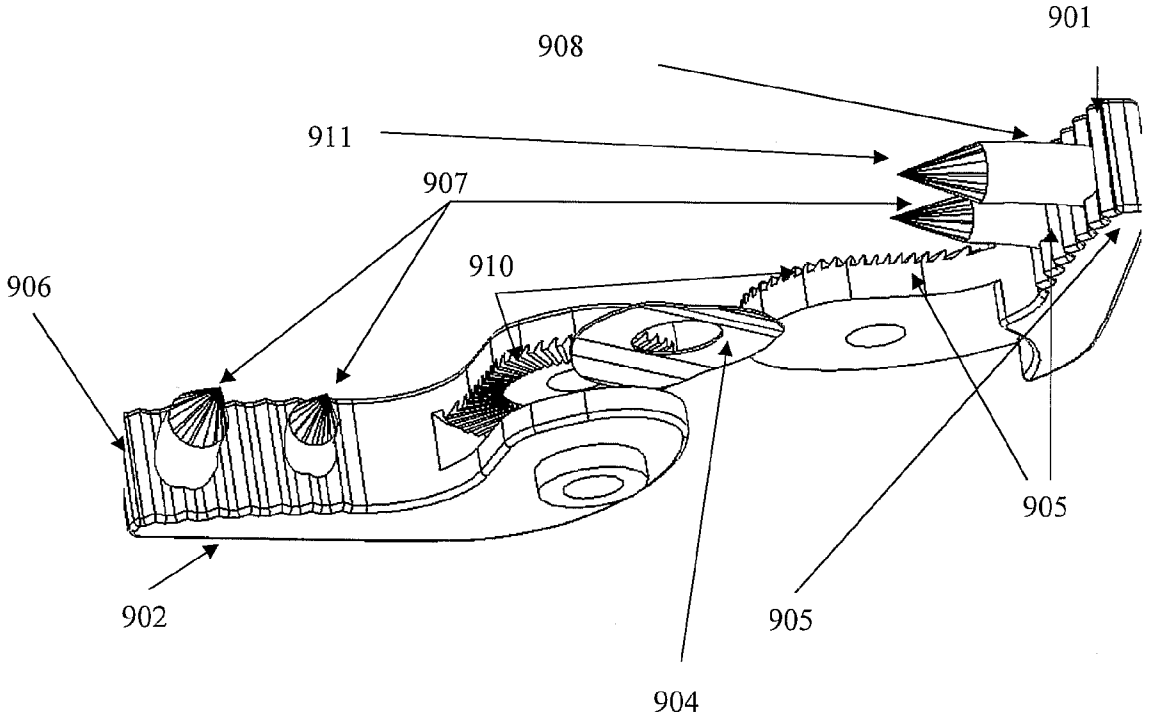

Fig. 9B

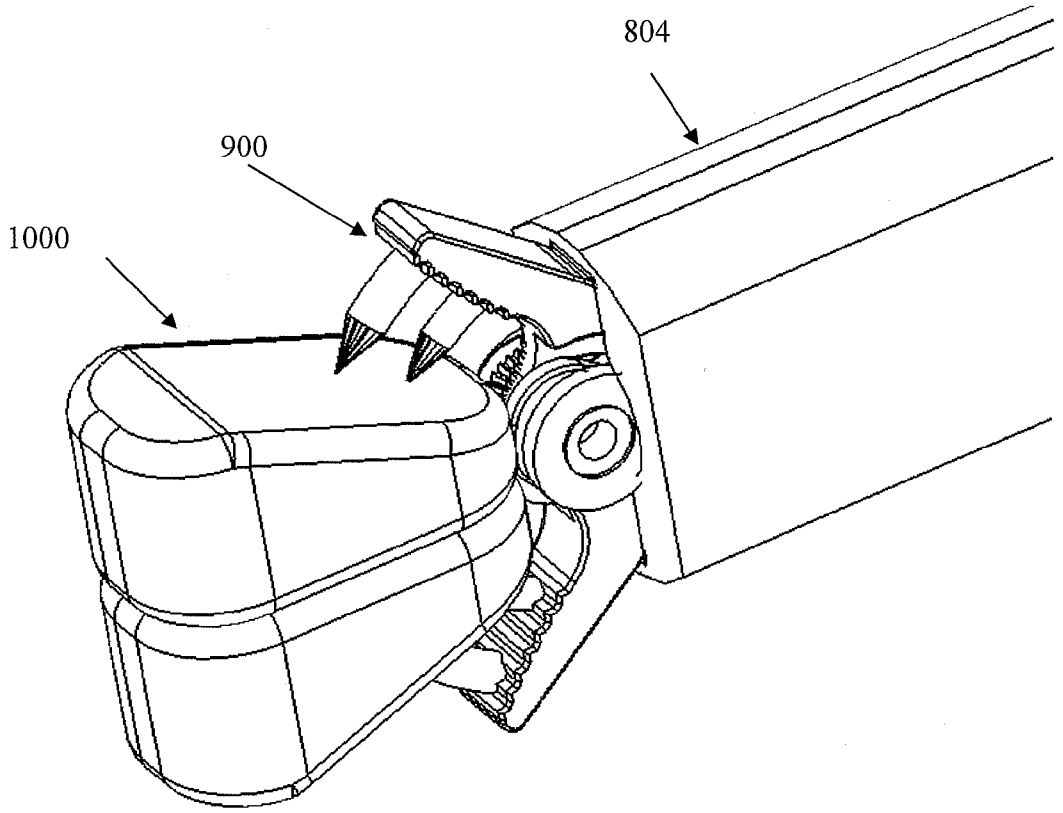

Fig. 10

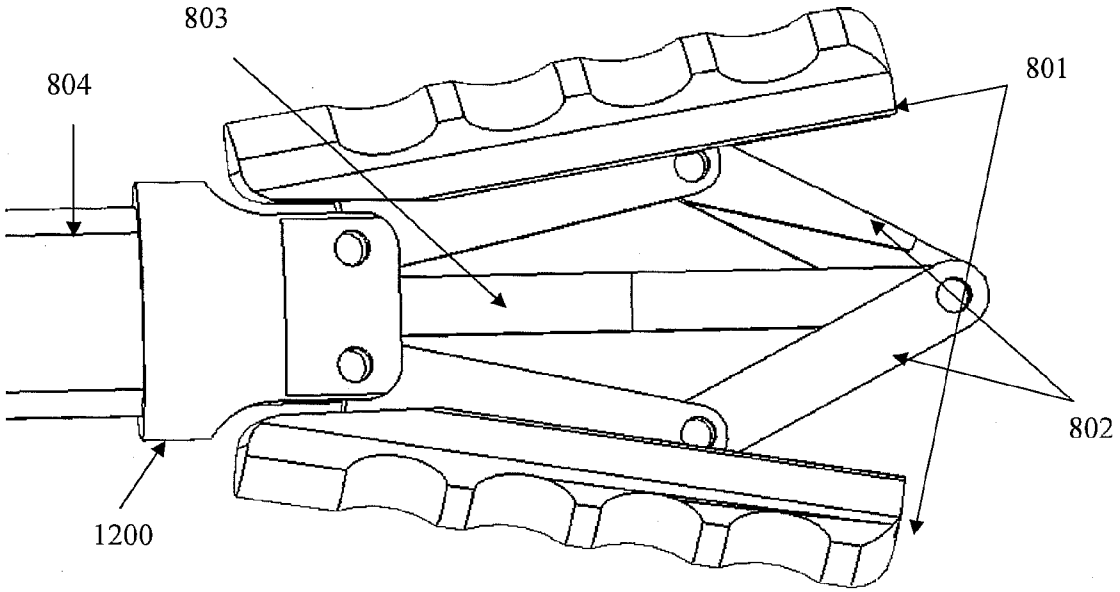

Fig. 11

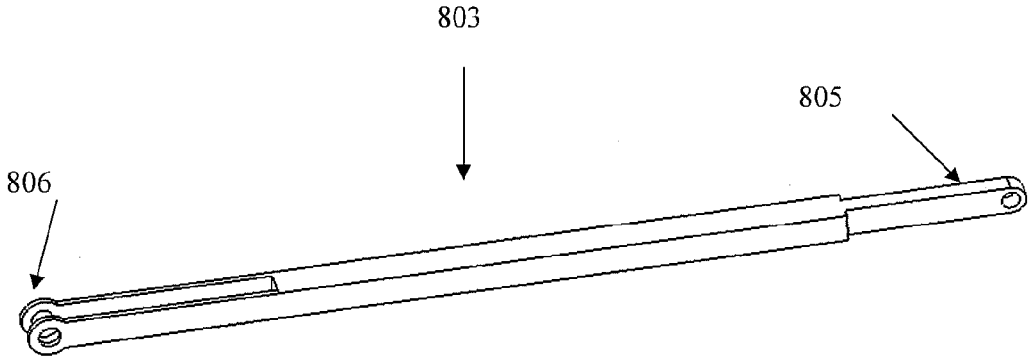

Fig. 12A

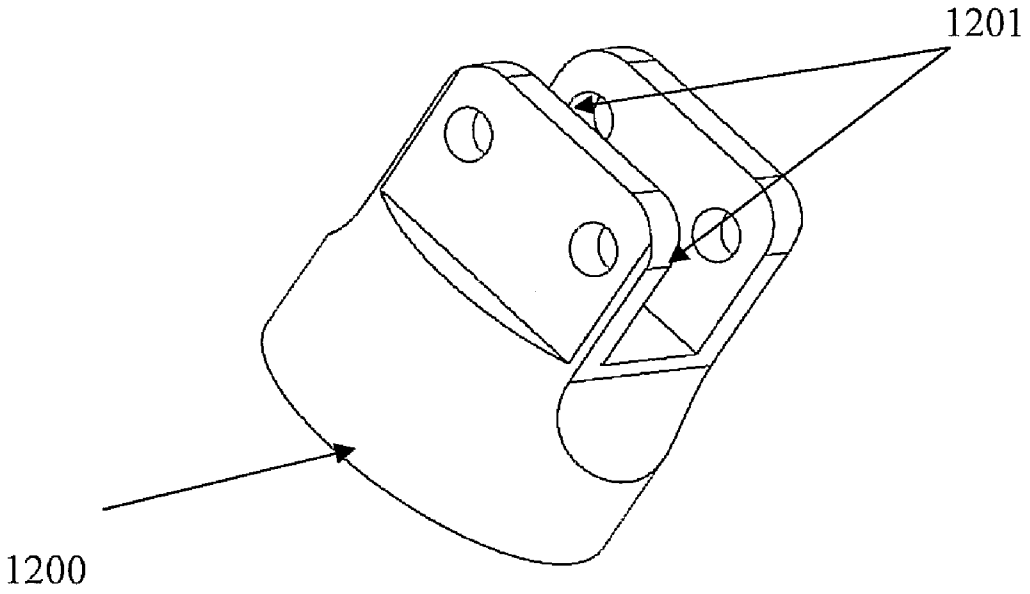

Fig. 12B

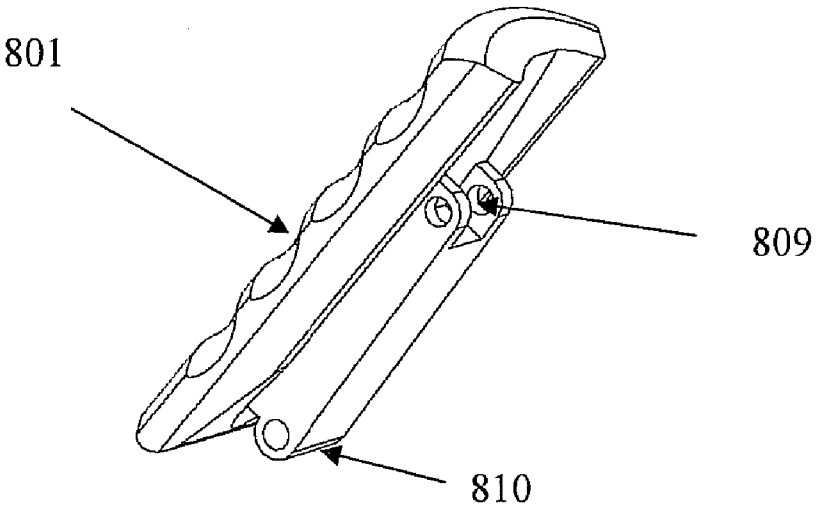

Fig. 12C

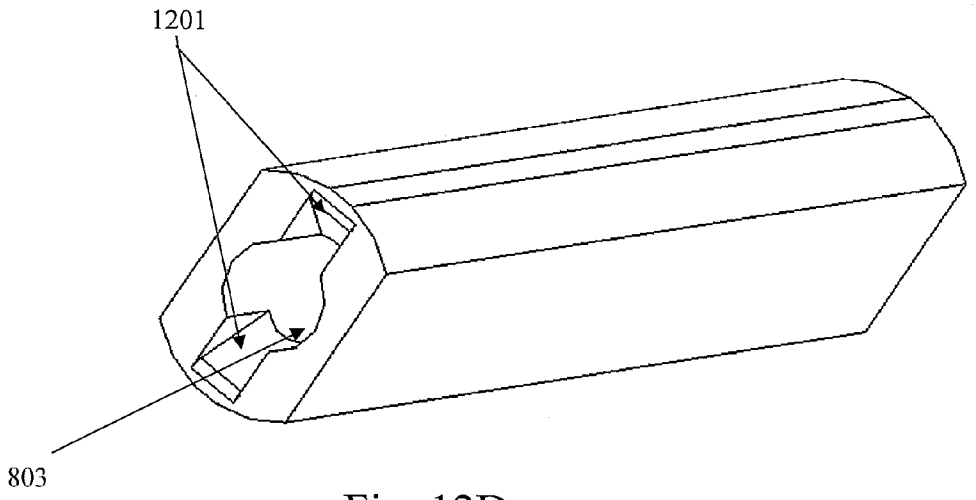

Fig. 12D

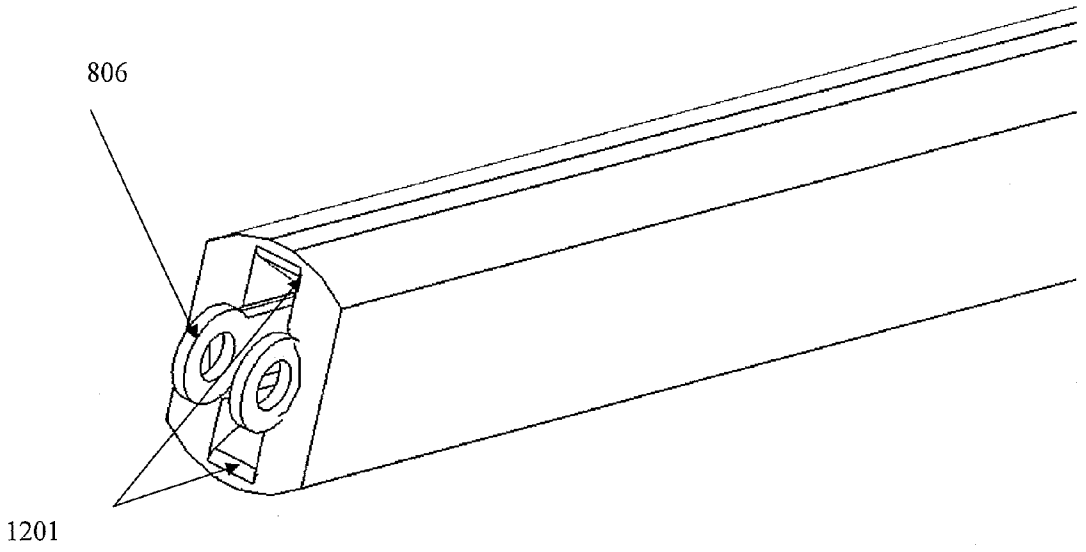

Fig. 12E

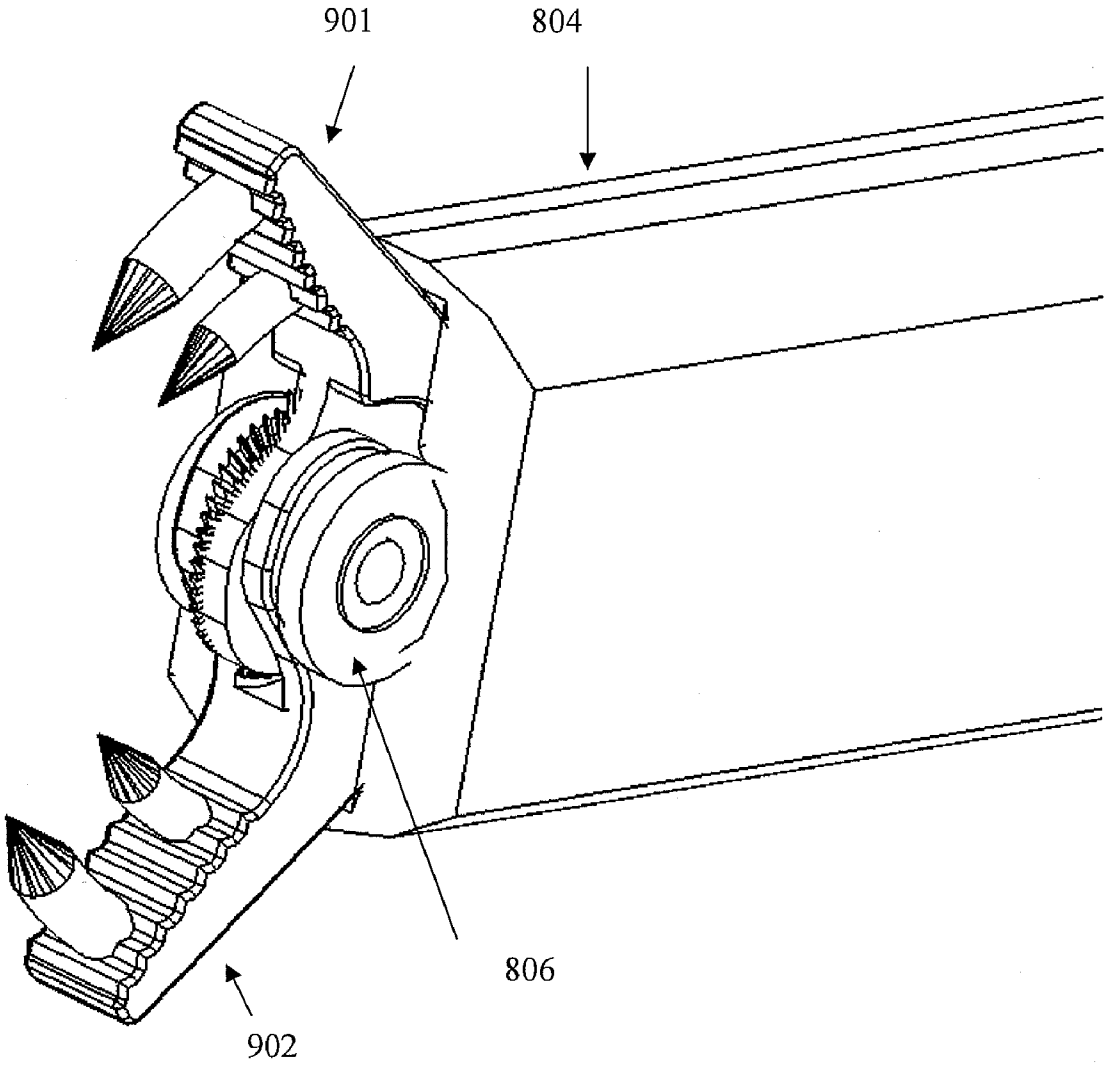

Fig. 13

BI-DIRECTIONAL FIXATING TRANSVERTEBRAL BODY SCREWS, ZERO-PROFILE HORIZONTAL INTERVERTEBRAL MINIPLATES, TOTAL INTERVERTEBRAL BODY FUSION DEVICES, AND POSTERIOR MOTION-CALIBRATING INTERARTICULATING JOINT STAPLING DEVICE FOR SPINAL FUSION

This application is a Continuation-In-Part Application of application Ser. No. 11/208,644, filed on Aug. 23, 2005 now U.S. Pat. No. 7,704,279 for which priority is claimed under 35, U.S.C. §120; and this application also claims priority under 35 U.S.C. §119(e) of U.S. provisional application No. 60/670,231, filed on Apr. 12, 2005; the entire contents of all the above identified patent applications are hereby incorporated by reference.

FIELD OF INVENTION

The present invention relates to a unique universal bidirectional screw (UBS) system, and in particular its application to the spine, also referred to as bi-directional fixating transvertebral (BDFT) screws which can be used to supplement other intervertebral spacers and/or bone fusion materials. BDFT screws can be incorporated into anterior and/or posterior cervical, thoracic and lumbosacral, novel, zero-profile, horizontal intervertebral mini-plates, and anterior cervical, thoracic and lumbosacral total interbody fusion devices (IBFD). In the lumbosacral and thoracic spine, BDFT screws can be used independently or supplemented with the horizontal intervertebral mini-plate or total IBFD, and are thus considered stand alone intervertebral body fusion constructs which may obviate the need for supplemental pedicle screw fixation. In the cervical spine these devices obviate the need for supplemental vertically oriented anterior plating, and can be used as stand alone interbody fusion devices. The present invention also relates to a stand-alone or supplemental, calibrating interarticular joint stapling device which can incrementally fine-tune posterior interarticular joint motion.

DESCRIPTION OF THE RELEVANT ART

Segmental spinal fusions which stabilize two or more adjacent segments of the spine are performed for painful degenerative disc disease, recurrent disc herniations, spinal stenosis, spondylolysis and spondylolisthesis. Over the past several decades a wide variety of fusion techniques and instrumentation have evolved. One of the earliest posterior fusion techniques entails non-instrumented in-situ on-lay posteriolateral fusion utilizing autologous iliac crest bone. Because of the high rate of imperfect fusions i.e. pseudoarthroses, transpedicular pedicle screw fixation which utilizes a variety of rods and interconnectors were developed to achieve less interbody motion and hence higher fusion rates. Pedicle screw fixation was initially combined with on-lay posteriolateral fusion. Because of the poor blood supply of the transverse processes, issues still remained with pseudoarthroses. In an attempt to address this problem, pedicle screw fixation has been supplemented with a variety of interbody fusion devices. This is based on the concept that axial loading enhances fusion and that the vertebral endplates have a better blood supply. Interbody lumbar fusion devices can be placed anteriorly via an anterior lumbar interbody fusion technique (ALIF) or posteriorly via a posterior lumbar interbody fusion technique (PLIF). Material options for interbody fusion devices have included autologous iliac crest/laminar bone, cylindrical threaded titanium interbody cages, cylindrical

threaded cortical bone dowels, vertebral interbody rings or boxes, carbon fiber cages, or femoral ring allograft. To lessen the complication of prolonged nerve root retraction the technique of circumferential transforaminal lumbar interbody fusion technique (TLIF) has been introduced. This employs the transforaminal placement of an interbody spacer such as one kidney bean shaped allograft, two circular allografts, one or two titanium circular cages, a single titanium or Peek (poly-ether-ketone) boomerang spacer. The threaded spacers are usually supplemented with autologous bone and /or bone morphogenic protein (BMP), demineralized bone matrix (DBM) in the form of paste or cement, rh-BMP with collagen sponges, or similar osteoinductive biological agents which are known to enhance fusion.

Currently all lumbosacral fusion techniques, ALIF, PLIF and TLIF, are typically supplemented by pedicle screw placement. In addition posterior transfacet screws also have been used to supplement ALIF procedures. Complications of pedicle screw placement include duration of procedure, significant tissue dissection and muscle retraction, misplaced screws with neural and/or vascular injury, excessive blood loss, need for transfusions, prolonged recovery, incomplete return to work, excess rigidity leading to adjacent segmental disease requiring further fusions and re-operations. Further advances of pedicle screw fixation including minimally invasive and image-guided technology, and the development of flexible rods have imperfectly addressed some but not all of these issues. Transfacet screws and similar embodiments entail the use of short or long screws which provide static facet alignment without motion calibration.

Complications of all current interbody fusion devices is their lack of coverage of the majority of the cross sectional area of the vertebral endplates and their potential for extrusion. The recently described flexible fusion system which consists of flexible rods attached to transpedicular screws (Dionysis, Zimmer) suffers from a high pull-out rate, higher rate of re-operation than standard fusions, and does not rank high with patient satisfaction. See for example, *Clinical experience with the Dynesys semirigid fixation system for the lumbar spine: Surgical and patient-oriented outcome in* 50 *cases after an average of* 2 *years*, D, Grob, A. Benini and A. F. Mannion. Spine Volume 30, number 3, Feb. 1, 2005.

Single or multiple level anterior cervical spinal fusions typically employ the replacement of the cervical disc or discs with autologous or allograft bone, or an intervertebral spacer filled with autologous or allograft bone, demineralized bone matrix, BMP or rh-BMP etc. Currently these anterior cervical fusions are augmented with anterior vertical titanium plates which cross the intervertebral space or spaces and are secured to the vertebral bodies above and below the disc space or spaces with perpendicularly penetrating vertebral body screws. The purpose of these plates is to serve as a barrier to prevent extrusion of the intervertebral disc replacement. Recently anterior vertical plating has also been employed in anterior lumbar fusion.

Complications of anterior spinal plating include the potential for neurovascular injury with screw misplacement, screw and/or plate pull-out, and screw and/or plate breakage. Other complications include potential esophageal compression/injury in the cervical spine secondary to high plate profile or pull-out, and to potential devastating vascular injury in the lumbar spine with plate movement and/or dislodgement into anterior iliac vasculature. Recent advances in cervical plating have therefore concentrated on the creation of lower profile

plates and even resorbable plates. These advances, however, have not eliminated the possibility of plate dislodgement and screw back out/breakage.

OBJECTS OF THE INVENTION

To achieve segmental fusion, applicants propose the use of novel bi-directional fixating transvertebral (BDFT) screws which can be strategically inserted via anterior or posterior surgical spinal approaches into the anterior and middle columns of the intervertebral disc space. The BDFT mechanism employs turning a wormed driving screw which then turns a spur gear which in turn simultaneously turns a rostrally oriented screw into the cephalad vertebral body, and a caudally directed screw into the caudal vertebral body. The vertebral bodies above and below the disc space by virtue of their engagement and penetration by the BDFT screws are thus linked and eventually fused. The gear box casings of the BDFT screws prevent vertebral body subsidence. The inside of the denuded intervertebral space can then be packed with autologous or allograft bone, BMP, DBX or similar osteoinductive material. Posteriorly or anteriorly in the lumbar spine, these screws can be capped with a horizontal mini-plate which will prevent bony growth into the thecal sac and nerves. We refer to this as a two-in-one design i.e. two BDFT screws combined with one horizontal mini-plate. Anteriorly a total intervertebral spacer containing three BDFT screws can be inserted. We refer to this as a three-in-one design i.e. three BDFT screws in one total fusion construct, i.e. an IBFD.

Applicants postulate that BDFT screws provide as strong or stronger segmental fusion as pedicle screws without the complications arising from pedicle screw placement which include screw misplacement with potential nerve and/or vascular injury, violation of some healthy facets, possible pedicle destruction and blood loss. By placing screws across the intervertebral space from vertebral body to vertebral body engaging anterior and middle spinal columns, and not into the vertebral bodies via the transpedicular route, some of the healthy facet joints are preserved. Because this technique accomplishes both anterior and middle column fusion, without rigidly fixing the posterior column, it in essence creates a flexible fusion. This device therefore is a flexible fusion device because the preserved posterior joints retain their function achieving at least a modicum of mobility and hence a less rigid (i.e. a flexible) fusion.

The very advantage of trans-pedicular screws which facilitate a strong solid fusion by rigidly engaging all three spinal columns (anterior, middle and posterior), is the same mechanical mechanism whereby complete inflexibility of all columns is incurred thereby leading to increasing rostral and caudal segmental stress which leads to an increased rate of re-operation.

Transvertebral fusion also leads to far less muscle retraction, blood loss, and significant reduction in O.R. time. Thus the complication of pedicular screw pull-out and hence high re-operation rate associated with the current embodiment of flexible fusion pedicle screws/rods is obviated. The lumbosacral BDFT screws can be introduced via PLIF, TLIF or ALIF operative techniques. Although one can opt to supplement these screws with transpedicular screws there would be no absolute need for supplemental pedicle screw fixation with these operative techniques.

Bi-directional fixating transvertebral (BDFT) screws can also be combined with novel zero-profile horizontal cervical and lumbar mini-plates. They can also be combined with a total IBFD with insertion spaces for bone material insertion.

For the performance of anterior cervical, and lumbar anterior or posterior fusions one or two centrally placed BDFT screws anterior to an interverterbal graft or spacer, may be a sufficient barrier by itself to prevent device/graft extrusion. However, to further safeguard against graft/spacer extrusion, applicants have devised horizontal linear mini-plates which can be incorporated into two anteriorly placed BDFT screws. It can also be incorporated into two posteriorly BDFT screws which are inserted posteriorly, in addition to a third BDFT screw which has been inserted centrally and posteriorly. This achieves a total disc intervertebral construct placed posteriorly composed of three BDFT screws placed in a triangulating matter. The capping horizontal mini-plate would prevent the bony material which is packed into the interspace from growing into the ventral; aspect of the nerves. The horizontal linear mini-plates traverse the diameter of the disc space and most of the disc space height. Thus a horizontal mini-plate placed posteriorly immediately beneath the lumbosacral thecal sac and nerve roots which is capped and secured to right and left BDFT screws, would prevent intervertebral device/graft extrusion. This mini-plate is essentially a zero- to sub-zero-profile plate in that it is either flush with or below the rostral and caudal vertebral body surfaces.

Because the BDFT screws engage a small percentage of the rostral and caudal vertebral body surface area, this plating system could be performed at multiple levels. This plating system which utilizes BDFT screws in the anterior cervical spine does not lead to any esophageal compression/injury, or vascular iliac vein injury in the lumbar spine. For the performance of two or three level intervertebral fusion with horizontal mini-plates there is virtually no possibility of plate breakage which can occur in long vertical anterior plates which are in current usage. Similarly, screw dislodgement, if it occurs would lead to minimal esophageal compression or injury compared to large vertical plate/screw dislodgement. In addition, in the cervical spine BDFT screw placement closer to the midline would avert any possibility of lateral neural or vertebral artery injury. Likewise multiple placement of IBFD devices can also be performed without the above mentioned risks and complications.

If one were inclined to further enhance posterior column thoraco-lumbosacral fixation, applicants introduce a novel calibrated facet stapling device which staples the inferior articulating facet of the superior segment to the superior articulating facet of the caudal vertebral segment unilaterally or bilaterally, further minimizing motion until interbody fusion occurs. The degree of flexibility can be further modulated by varying the calibration strength and torque of facet stapling. This would be dictated by the need for greater or lesser degrees of motion preservation. All other know transfacet stabilizers are not calibrated, but are static.

Currently, failed anterior lumbar arthoplasties are salvaged by combined anterior and posterior fusions. BDFT screws and/or IBFDs could be utilized as a one-step salvage operation for failed/extruded anteriorly placed lumbar artificial discs obviating the above salvage procedures which have greater morbidity. Likewise, for anterior cervical fusion, applying cervical BDFT screws alone or in combination with cervical mini-plates or IBFDs addresses the deficiencies and complications of current cervical plating technology as mentioned above.

BRIEF DESCRIPTION OF THE DRAWINGS

FIG. **1**A illustrates an isometric view of the universal bidirectional screw (UBS) alternatively referred to as the bidirectional fixating transvertebral screw (BDFT).

FIG. **1**B illustrates the lateral view of the UBS (BDFT) with rostral and caudal screws partially extended.

FIG. **1**C illustrates the lateral view of the UBS (BDFT) with the screws withdrawn.

FIG. **2** illustrates a front view of the UBS (BDFT) without the gear box and cover.

FIGS. **3**A and **3**B illustrate perspective, and exploded perspective views, respectively, of the UBS (BDFT) without gear box and cover, with the screws fully extended.

FIG. **4** illustrates a perspective view of the UBS (BDFT) without the gear box and cover, with screws partially extended.

FIG. **5**A illustrates a perspective view of a single insertion screw of the BDFT.

FIG. **5**B illustrates a perspective cross-sectional view of a BDFT insertion screw.

FIG. **5**C illustrates a perspective view of the spindle.

FIG. **6**A illustrates an exploded view of the two-in-one design consisting of two BDFT screws and a horizontal mini-plate.

FIG. **6**B illustrates the two-in-one design with the horizontal mini-plate secured and the screws extended.

FIG. **6**C illustrates the two-in-one design, and its position with respect to the vertebral body.

FIG. **7**A illustrates an exploded view of the three-in-one system (IBFD) which consists of three BDFT screws in an enclosure system.

FIG. **7**B illustrates the three-in-one system (IBFD) with screws extended.

FIG. **7**C illustrates the IBFD with an accompanying screw driver.

FIGS. **8**A and **8**B illustrate perspective, and cross-sectional views of the interarticular joint stapling device with staple, respectively.

FIGS. **9**A and **9**B illustrate perspective and exploded views of the staple, respectively.

FIG. **10** illustrates a perspective view of the staple gun engaging the facet joint.

FIG. **11** illustrates the remote action mechanism of the staple gun.

FIG. **12** illustrates the different components of the staple gun. FIG. **12**A illustrates the drive rod. FIG. **12**B illustrates the fulcrum cylinder connector. FIG. **12**C illustrates the grip handle. FIG. **12**D illustrates the cylinder. FIG. **12**E illustrates the cylinder with the drive rod.

FIG. **13** illustrates the drive and insertion mechanism of the staple.

DETAILED DESCRIPTION OF THE INVENTION

1. The Medical Device

Referring to FIGS. **1**A-**5**C the above described problem can be solved in the cervical, thoracic and lumbar spine by insertion into the denuded intervertebral disc space a bidirectional fixating transvertebral (BDFT) screw or (UBS) screws **100**.

FIGS. **1**A through **1**C illustrate three-dimensional views of the UBS/BDFT screw **100**. All its inner components are in the gear box casing **101**. The internal mechanisms are illustrated in FIGS. **2**-**5**C. FIG. **1**A illustrates the isometric view of the UBS **100** showing the outer gear box **101** containing the external mechanism, with superior screw **102** and inferior screw **103** extended. There are serrations **104** on the superior and inferior surfaces of the box **101** intended to integrate with the surface of the superior and inferior vertebral body surfaces. The gear box **101** which is made either of PEEK (polyethylene-ketol) or titanium acts as a column preventing subsidence of the disc space. Also seen are the surface of the worm drive screw **105**, and the horizontal mini-plate screw insert **106** for capping the horizontal mini-plate to the gear box's **101** surface (FIGS. **1**A-C and **6**A-C).

FIGS. **1**-**4** illustrate the inner components of the BDFT/UBS **100** without the enclosing gear box **101**. The inner components include a single wormed drive screw **105**, a drive spindle **201**, a spur gear **202**, superior screw **102** and inferior screw **103** with superior and inferior screw spindles **205**, **206** (FIGS. **1**-**4**). The mechanism of operation is thus: The wormed drive screw **105** is rotated clockwise. This rotation in turn rotates the spur gear **202**. The spur gear **202** interdigitates with the superior screw **102** on one side and the inferior screw **103** on the other side. Rotation of the spur gear **202** leads to simultaneous rotation of the superior and inferior screws **102**, **103** in equal and opposite directions. The spindles in the wormed drive screw **105** and the superior and inferior screws **102**, **103** maintain the axis of screw orientation. The screws **102**, **103** are self drilling and hence there is no need for bony preparation.

FIGS. **5**A and **5**B illustrate in perspective and cross-sectional views the detailed elements of the superior and inferior screws **102**, **103**. These figures illustrate the external threading **501**, the internal threading **502**, the spindle socket and the spur gear teeth **503** which interdigitate with the spur gear **202**. The screws **102**, **103** are self drilling as noted.

FIG. **5**C illustrates the details of the spindle including its base **505**, its rod **506** and its threaded segment **507**.

FIGS. **6**A-**6**C illustrate the two-in-one design concept. This design concept includes two UBS/BDFT screws **100***a*, **100***b* which are placed in the left and right portions of the intervertebral disc space, which are then capped by a horizontal mini-plate **600**. Note how the mini-plate has four perforations. There are two perforations **601**, **602**, one on each side to allow entry of the wormed screw drive into the gear box. There are an additional two perforations **603**, **604**, one on each side, to secure the plate to the two UBS boxes **100***a*, **100***b* with plate screw caps **605**, **606**. FIG. **6**C demonstrates the position of the two-in-one system with respect to the vertebral body **610**. In between the two BDFT/UBS screws **100***a*, **100***b*, bone fusion material is inserted. The horizontal mini-plate **600** prevents the bone from growing into the nerves above it. With this system it is also possible to place a third screw inferior and in the middle of the two other UBS screws **100***a*, **100***b* thereby providing additional screw intervertebaral fixation.

FIGS. **7**A through **7**C illustrate the three-in-one design otherwise known as the IBFD. This device consists of five components. Three UBS/BDFT screws **100***a*, **100***b*, **100***c*, a superior and an inferior enclosure **701**, **702**. The enclosures **701**, **702** are attached to the UBS/BDFT screws **100***a*, **100***b*, **100***c*. A screw driver **705** is used to actuate the screws **100***a*, **100***b*, **100***c*. There are also slots **703**, **704** for bone fusion material. This device is only for anterior insertion into the spine, and it covers the entire cross-sectional area of the interspace, and is thus a total IBFD. The enclosures can be made out of PEEK, titanium, cobalt chromium or any other similar substance. The structure of the device provides significant three column stability and prevents subsidence of the construct.

FIGS. **8**A and **8**B illustrate the individual components of the facet joint staple gun **800**. It consists of a remote action mechanism which includes grip handles **801**, transmission linkages **802**, a drive rod **803**, a cylinder **804**. The drive rod **803** has a force end **805** and an action end **806**.

FIGS. **9**A and **9**B illustrate the details of the facet joint stapler. The staple **900** has superior and inferior staple segments **901**, **902**. These segments **901**, **902** are joined by a teethed unidirectional locking mechanism **903** having right triangular teeth **910**, and a spring washer **904**. The inferior surfaces **905**, **906** of each staple segment **901**, **902** are serrated to facilitate bony integration, and each segment has two bone piercing elements **907** with a base **908**. FIG. **10** illustrates the staple **900** in the staple gun **800**, in the opened position engaging the facet joints, prior to penetration and stapling.

FIGS. **11**-**13** illustrate the different components of the staple gun **800** and staple **900** in a detailed manner. The mechanism of action of the staple gun **800** includes engaging

the staple **900** in the action end **806** of the drive rod **803** and resting in the staple guide chamfers **1201** (FIGS. **12**A-**13**). When the staple **900** is thus engaged in the staple gun **800**, the grip handles **801** are squeezed together, bringing the linkages **802** together (FIGS. **11**-**12**C). This action is transmitted to the force end **805** of the driving rod **803** which moves upwards. This leads to upward movement of the action end **806** of the drive rod **803** in which the staple **900** is nestled, leading to the opposition of the superior and inferior segments **901**, **902** of the staple, **900** and the penetration of the pins **907** into the bone. The distance of bone penetration is modulated by the pressure put on the hand grips **801**. Hence graded facet joint opposition leading to different degrees of opposition and hence rigidity can be accomplished. The greater the force the greater the opposition. Thus this is a modulated not a static stapling mechanism.

2. The Surgical Method

The surgical steps necessary to practice the present invention will now be described.

The posterior lumbar spine implantation of the BDFT (UBS) screws **100**, horizontal mini-plate **600** and IBFD **100***a*, **100***b*, **100***c* can be implanted via previously described posterior lumbar interbody fusion (PLIF) or posterior transforaminal lumbar interbody fusion (TLIF) procedures. The procedure can be performed open, microscopic, closed, tubular or endoscopic. Fluoroscopic guidance can be used with any of these procedures.

After the adequate induction of anesthesia, the patient is placed in the prone position.

A midline incision is made for a PLIF, and one or two parallel paramedian incisions or a midline incision is made for a TLIF. For the PLIF a unilateral or bilateral facet sparing hemi-laminotomy is created to introduce the BDFT (UBS) screws **100**, into the disc space after it is adequately prepared. For the TLIF procedure, after a unilateral dissection and drilling of the inferior articulating surface and the medial superior articulating facet, the far lateral disc space is entered and a circumferential discectomy is performed. The disc space is prepared and the endplates exposed.

There are then multiple embodiments to choose from for an intervertebral body fusion. With the first and simplest choice, under direct or endoscopic guidance one. Two or three BDFT screws **100** can be placed. If two screws **100** are placed. One is placed on the right, and one on the left. If three are placed, the additional one can be placed more anterior and midline, such that the three screws **100***a*, **100***b*, **100***c* form a triangulation encompassing the anterior and middle columns of the vertebral bodies (FIGS. **6**B and **6**C). Once the screws **100** are placed into the desirable intervertebral body positions, the worm drive screws **105** are turned clockwise which leads to the penetration and engagement of the superior and inferior bidirectional screws **102**, **103** into the vertebral bodies above and below. BDFT screws can also be placed in angled positions if desirable (not illustrated). Bone material or alternative intervertebral fusion material can then be packed into the disc space around the BDFTs **100**. The casing gear box **101** of the screws prevents subsidence of the vertebral bodies (FIGS. **1**A-C). An additional option in the posterior lumbar spine is to place a horizontal mini-plate **600** underneath the thecal sac to prevent bone migration into the nerves. This plate **600** (FIGS. **6**A-C) can be slid underneath the thecal sac, and secured to the right and left BDFT (UBS) screws **100**. Once set, the plate **600** can be locked down with plate screw caps **606** thereby preventing movement (FIGS. **6**A-C).

If further posterior column stability or rigidity is required, unilateral or bilateral, single level or multiple level facet screw stapling **900** can be performed under open, microscopic flouroscopic or endoscopic vision. Radiographic confirmation of staple position is obtained. Calibrated stapling leads to opposition of the facet joints **1000** with incremental degrees of joint opposition. This can lead to variable degrees of posterior column rigidity and/or flexibility (FIGS. **8**-**13**).

The anterior cervical, thoracic and lumbar spine implantation of one, two or three UBS (BDFT) screws **100** can be performed in a similar manner to posterior application. Likewise a horizontal mini-plate **600** can be used to cap two BDFT screws **100**. Anterior placement of the three-in-one device (IBFD) **100***a*, **100***b*, **100***c* into the L4/5 and L5/S1 interspaces can be performed on the supine anesthetized patient via previously described open micropscopic or endoscopic techniques. Once the disc space is exposed and discectomy and space preparation is performed, placement of one, two or three BDFT screws **100** with or without a mini-plate **600**, or placement of the IBFD **100***a*, **100***b*, **100***c* is identical to that performed for the posterior approach.

The posterior placement of the BDFT screws **100** alone or combined with horizontal mini-plates (two-in-one) **600** or with IBFD **100***a*, **100***b*, **100***c* into the thoracic spine can be performed via previously described transpedicular approaches; open or endoscopic. The anterior placement of the IBFD (three-in-one) into the thoracic spine can be accomplished via a trans-thoracic approach. Once disc space exposure is obtained via either approach, all of the above mentioned embodiments can be inserted. Engagement of the devices is identical to what was mentioned above.

For anterior placement of the cervical embodiments of the BDFT screw(s) **100** with or without the horizontal cervical mini-plate **600**, and the IBFD **100***a*, **100***b*, **100***c* embodiment, the anterior spine is exposed in the anesthetized patient as previously described for anterior cervical discectomies. Once the disc space is identified, discectomy is performed and the disc space prepared. Implantation and engagement of all devices is identical to that described for the anterior lumbar and thoracic spines.

The present invention may provide an effective and safe technique that overcomes the problems associated with current tanspedicular-based thoracic and lumbar fusion technology, and with current vertical cervical plating technology, and for many degenerative stable and unstable spine diseases, and could replace many pedicle screw-based and anterior vertical-plate based instrumentation in many but not all degenerative spinal conditions. Calibrated facet joint screw staples **900** can facilitate flexible fusions and could replace current static trans-facet screws.

To our knowledge there has not been any other previously described bidirectional screw **100** for use in the spine, other joints, or for any commercial or carpentry application. The bidirectional screw **100** described herein may indeed have applications in general commercial, industrial and carpentry industries. To our knowledge the description of zero to subzero profile anterior or posterior horizontal spinal plates which traverse the diameter of the disc space has not been previously described. To our knowledge an intervertebral three-in-one construct **100***a*, **100***b*, **100***c* has not been previously reported. To our knowledge calibrated facet joint staples **900** have not been previously described.

We claim:

1. A self-drilling screw apparatus comprising:

a gear box;

a first screw member having a tapered end and a threaded body disposed within the gear box;

a second screw member having a tapered end and a threaded body disposed within the gear box, the second screw member being axially offset from the first screw member; and

a drive mechanism, including a gear disposed between and engaging each of the first and second screw members,

the drive mechanism simultaneously driving the first and second screw members in equal and opposite directions from the gear box.

2. The apparatus according to claim **1**, wherein the gear box includes an aperture which provides access to a wormed drive screw.

3. The apparatus according to claim **1**, wherein the gear is a spur gear which is driven by a wormed drive screw and which simultaneously rotates the first and second screw members in equal and opposite directions from the gear box.

4. The apparatus according to claim **3**, wherein the wormed drive screw includes an accessible head that is rotated in order to simultaneously drive the first and second screw members from the gear box.

5. The apparatus according to claim **3**, wherein the first and second screw members include internal threading and spindles.

6. The apparatus according to claim **3**, wherein the wormed drive screw includes a spindle.

7. The apparatus according to claim **4**, wherein the accessible head is rotated by a screw driver

8. The apparatus according to claim **1**, further including:

at least a second gear box;

a third screw member having a tapered end and a threaded body disposed within the second gear box;

a fourth screw member having a tapered end and a threaded body disposed within the second gear box, the fourth screw member being axially offset from the third screw member; and

a second drive mechanism, including a gear disposed between and engaging each of the third and fourth screw members, the second drive mechanism simultaneously driving the third and fourth screw members in equal and opposite directions from the second gear box.

9. The apparatus according to claim **8**, further comprising: a plate for joining the first and second gear boxes together.

10. The apparatus according to claim **9**, wherein the plate includes screw caps.

11. The apparatus according to claim **8**, further including:

at least a third gear box;

a fifth screw member having a tapered end and a threaded body disposed within the third gear box;

a sixth screw member having a tapered end and a threaded body disposed within the third gear box, the sixth screw member being axially offset from the fifth screw member; and

a third drive mechanism, including a gear disposed between and engaging each of the fifth and sixth screw members, the drive mechanism simultaneously driving the fifth and sixth screw members in equal and opposite directions from the third gear box.

12. The apparatus according to claim **11**, wherein the gear boxes are aligned in a predetermined pattern and a first enclosure is disposed above the gear boxes and a second enclosure is disposed below the gear boxes.

13. The apparatus according to claim **12**, wherein the gear boxes are aligned in a triangular pattern.

14. The apparatus according to claim **13**, wherein the first and second enclosures include slots for bone fusion material.

15. The apparatus according to claim **1**, wherein the gear box includes serrations on a first exterior surface and a second exterior surface.

16. The apparatus according to claim **10**, wherein the gear box includes screw inserts corresponding to perforations of the plate, and

wherein the screw caps engage the screw inserts of the gear box through the perforations of the plate to couple the plate to the gear box.

17. The apparatus according to claim **16**, wherein the gear box includes an aperture, and

wherein the aperture provides access to a wormed drive screw.

18. The apparatus according to claim **1**, wherein the drive mechanism includes:

the gear; and

a wormed drive screw engaging and driving the gear,

wherein the wormed drive screw includes a head that is accessible from an exterior of the gear box.

19. The apparatus according to claim **18**, wherein the gear is a spur gear,

wherein the spur gear engages each of the first screw member, the second screw member, and the wormed drive screw, and

wherein rotation of the wormed drive screw drives the spur gear, which simultaneously rotates the first and second screw members in equal and opposite directions from the gear box.

20. The apparatus according to claim **19**, wherein each of the first screw member and the second screw member includes:

a first portion having external threading; and

a second portion having spur gear teeth engaging the spur gear.

21. The apparatus according to claim **20**, wherein each of the first screw member and the second screw member includes:

an internal portion having internal threading; and

a cavity.

22. The apparatus according to claim **21**, further comprising:

a first spindle inserted into the first screw member,

the first spindle including:

a base extending from an end of the first screw member that is opposed to the tapered end;

a rod engaging the cavity of the first screw member; and

a threaded portion engaging the internal threading of the internal portion of the first screw member.

23. The apparatus according to claim **22**, further comprising:

a second spindle inserted into the second screw member,

the second spindle including:

a base extending from an end of the second screw member that is opposed to the tapered end;

a rod engaging the cavity of the second screw member; and

a threaded portion engaging the internal threading of the internal portion of the second screw member.

24. The apparatus according to claim **19**,

wherein the first screw member rotates about a first axis,

wherein the second screw member rotates about a second axis,

wherein the spur gear rotates about a third axis,

wherein the wormed drive screw rotates about a fourth axis;

wherein the first axis, the second axis, and the third axis are parallel to each other, and

wherein the fourth axis is transverse to the third axis.

* * * * *