US008198563B2

(12) **United States Patent**
Tsai

(10) **Patent No.: US 8,198,563 B2**
(45) **Date of Patent: Jun. 12, 2012**

(54) **SOCKET STRUCTURE WITH DUPLEX ELECTRICAL CONNECTION**

(76) Inventor: **Chou Hsien Tsai**, Taipei Hsien (TW)

(*) Notice: Subject to any disclaimer, the term of this patent is extended or adjusted under 35 U.S.C. 154(b) by 126 days.

(21) Appl. No.: **12/759,408**

(22) Filed: **Apr. 13, 2010**

(65) **Prior Publication Data**

US 2010/0267282 A1 Oct. 21, 2010

(30) **Foreign Application Priority Data**

Apr. 15, 2009	(TW)	98112573 A
May 26, 2009	(TW)	98117405 A
Jun. 5, 2009	(TW)	98210021 A
Jan. 13, 2010	(TW)	99100847 A

(51) **Int. Cl.**
H01H 33/666 (2006.01)

(52) **U.S. Cl.** **218/140**; 218/118

(58) **Field of Classification Search** 439/660, 439/607.41
See application file for complete search history.

(56) **References Cited**

U.S. PATENT DOCUMENTS

7,318,752	B2 *	1/2008	Fujimoto et al.	439/660
7,359,208	B2 *	4/2008	Ni	361/752
7,361,059	B2 *	4/2008	Harkabi et al.	439/660
7,440,287	B1 *	10/2008	Ni et al.	361/752
7,670,156	B2 *	3/2010	Chen	439/108
2009/0258539	A1 *	10/2009	Zheng et al.	439/607.41

* cited by examiner

Primary Examiner — Truc Nguyen
(74) *Attorney, Agent, or Firm* — Pro-Techtor Int'l Services

(57) **ABSTRACT**

A socket structure includes a base; a slot, disposed on one end of the base and to be connected to one plug having one row of terminals; a tongue disposed on a front end of the base and within the slot so that chambers of the slot on two sides of the tongue may be normally and oppositely inserted and positioned into the slot; one row of first contacts separately arranged on one surface of the tongue, wherein each first contact is electrically connected to a first pin extending out of the base; and one row of second contacts separately arranged on the other surface of the tongue. Each second contact is electrically connected to a second pin extending out of the base. When the plug is inserted into the slot, the row of terminals of the plug are electrically connected to the row of first or second contacts.

33 Claims, 29 Drawing Sheets

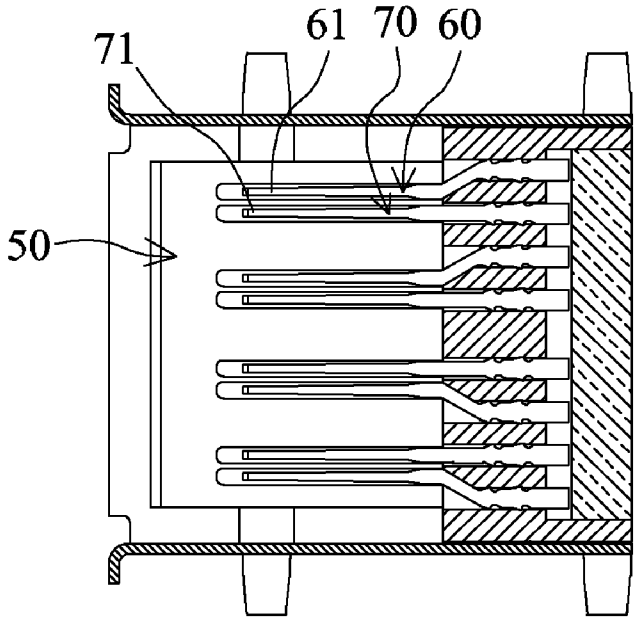

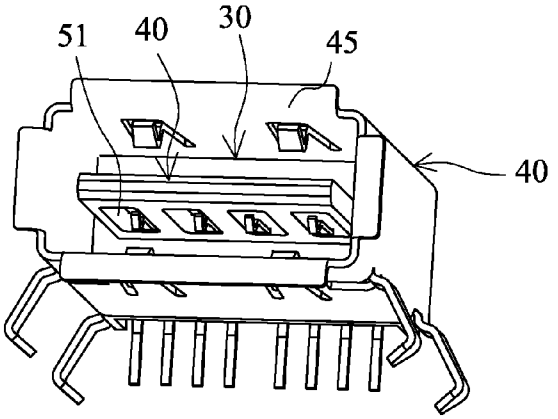

FIG. 1

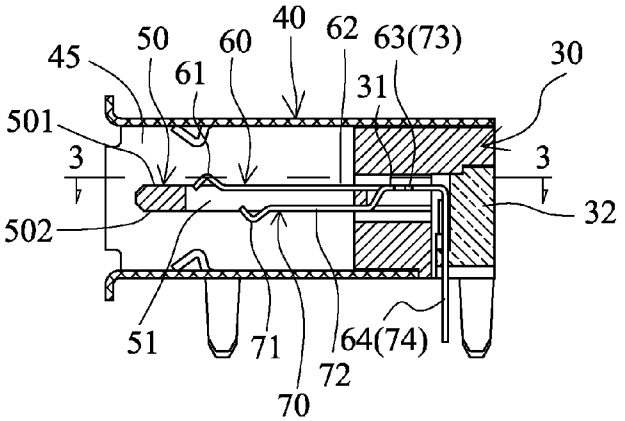

FIG. 2

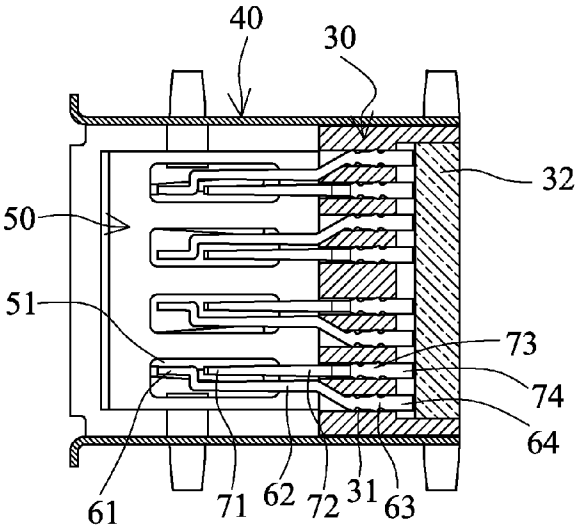

FIG. 3

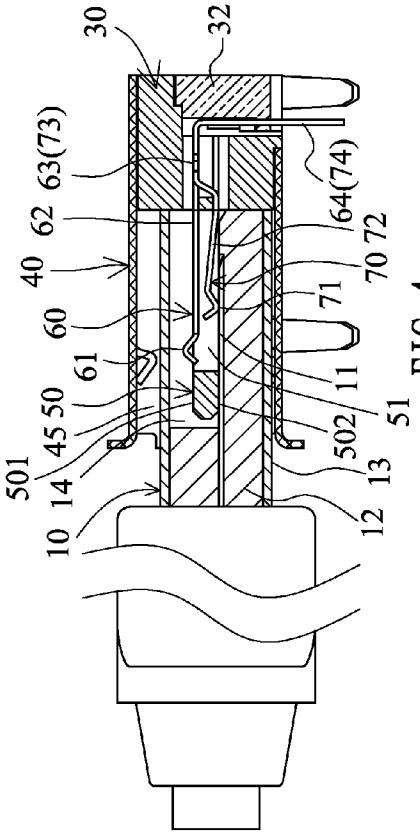

FIG. 4

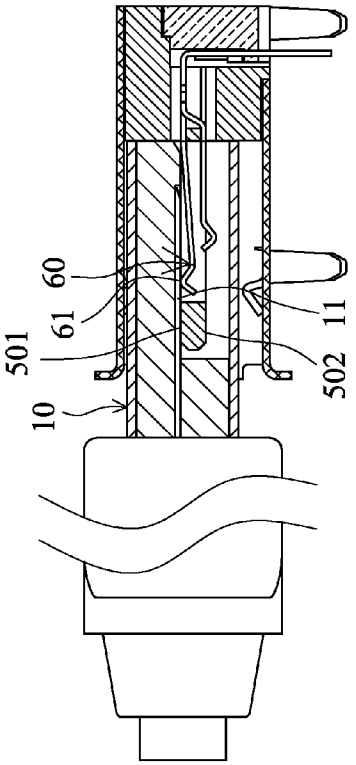

FIG. 5

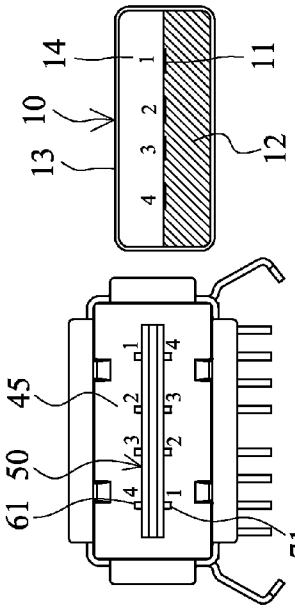

FIG. 4A

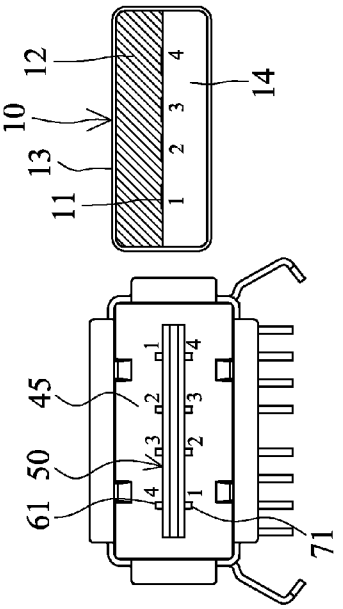

FIG. 5A

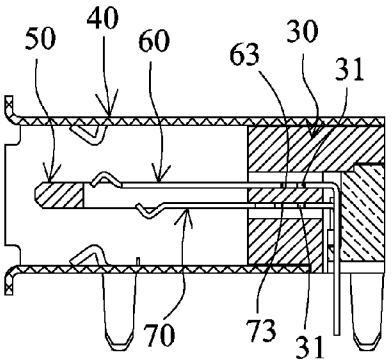

FIG. 6

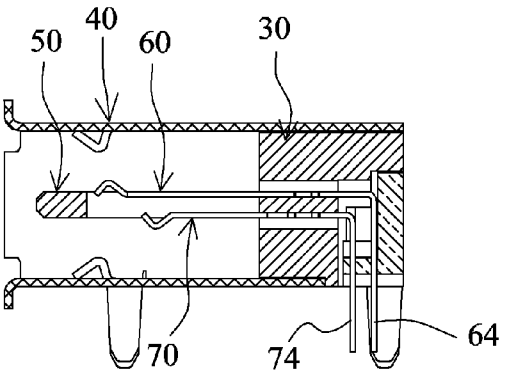

FIG. 7

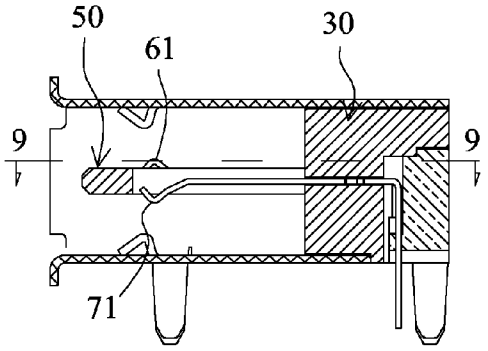

FIG. 8

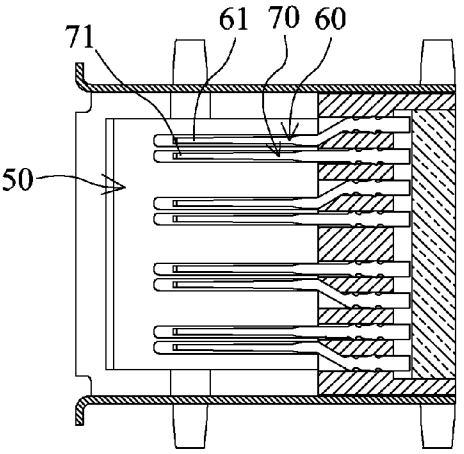

FIG. 9

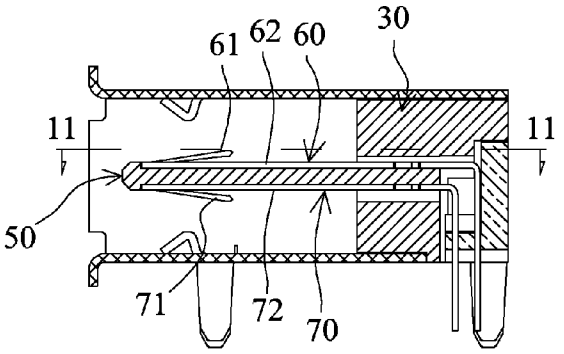

FIG. 10

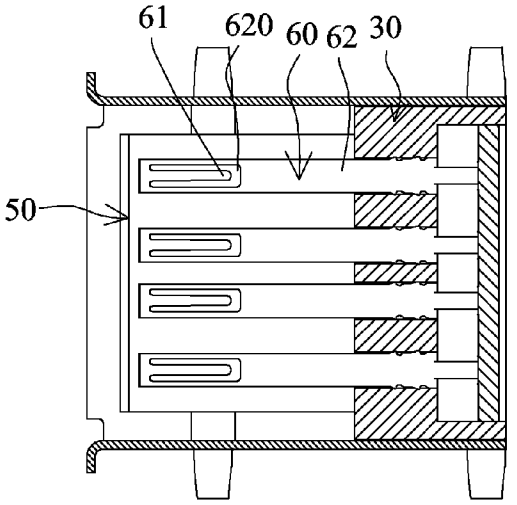

FIG. 11

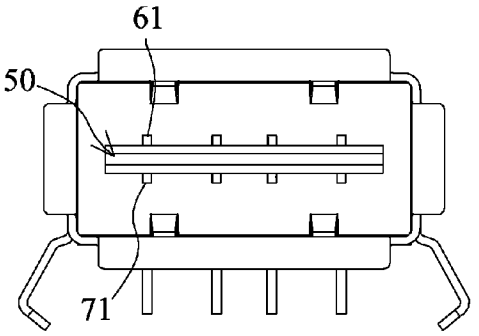

FIG. 12

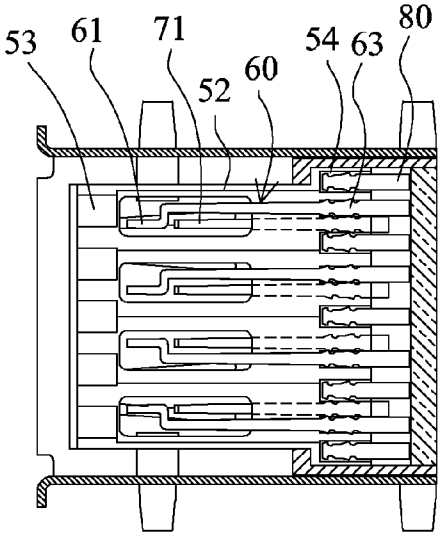

FIG. 14

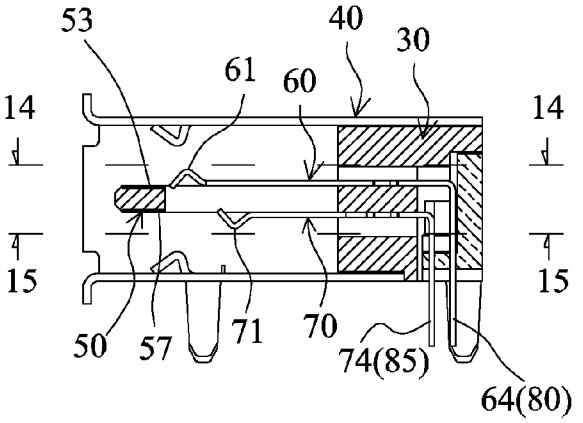

FIG. 13

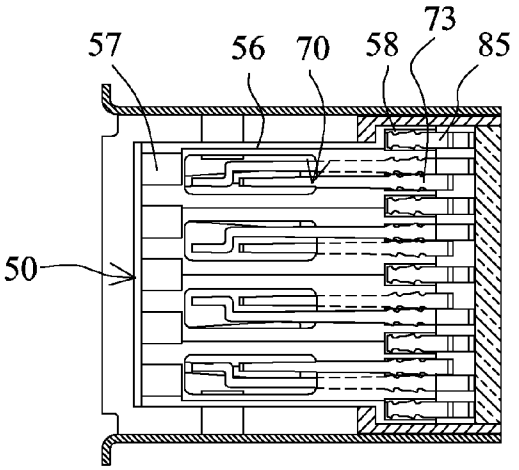

FIG. 15

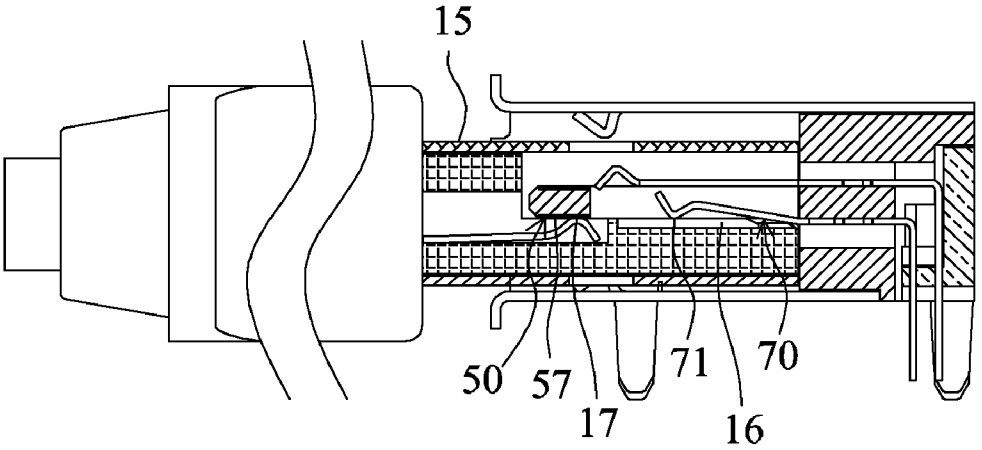

FIG. 16

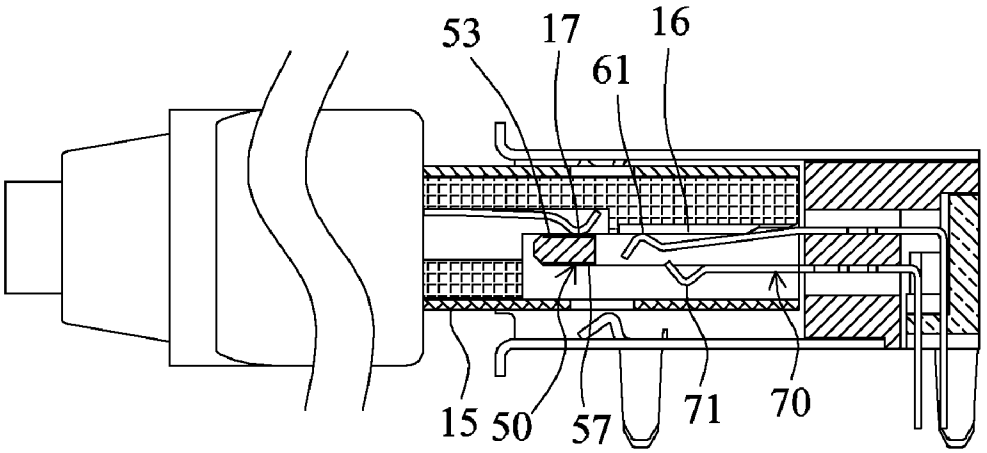

FIG. 17

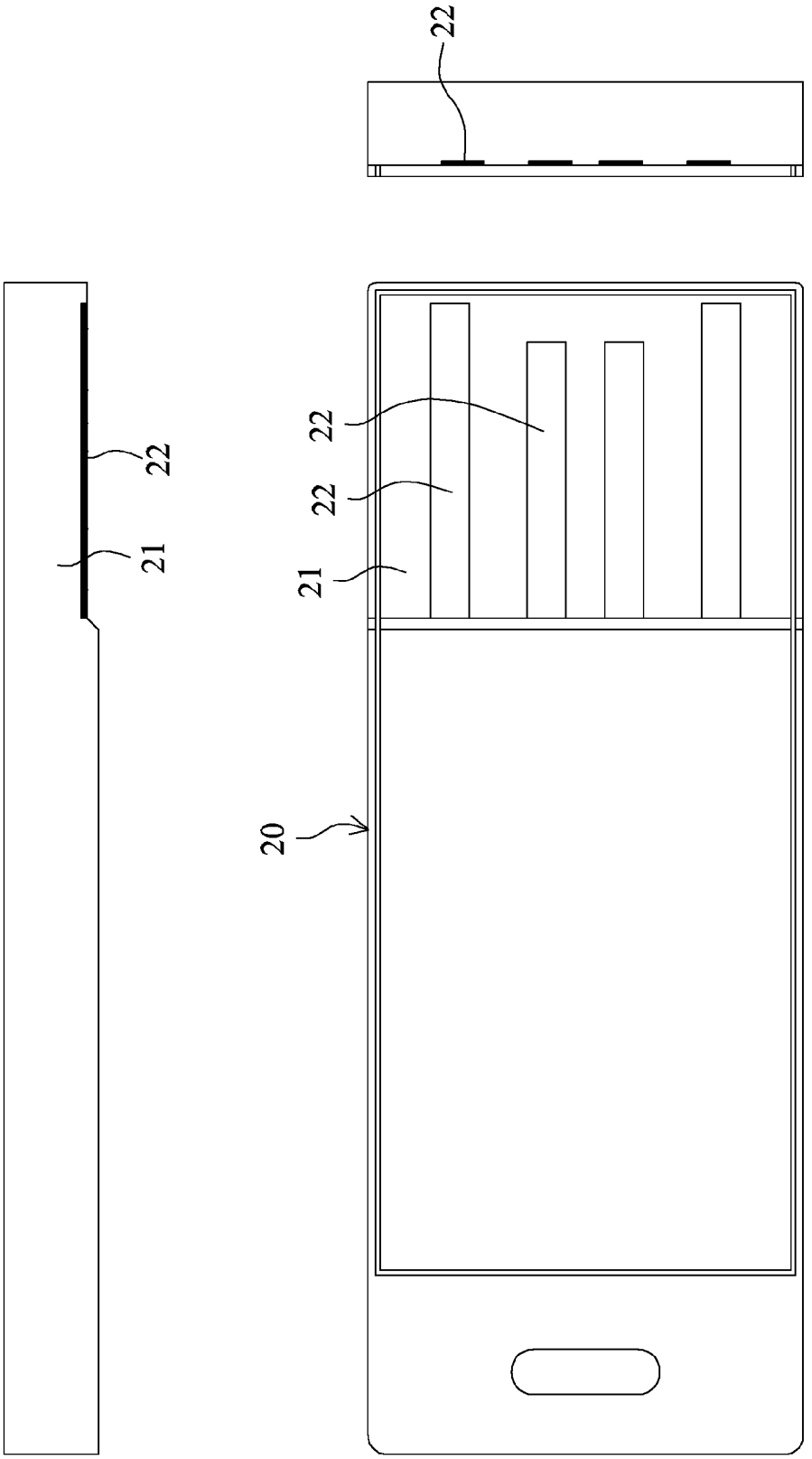

FIG. 18

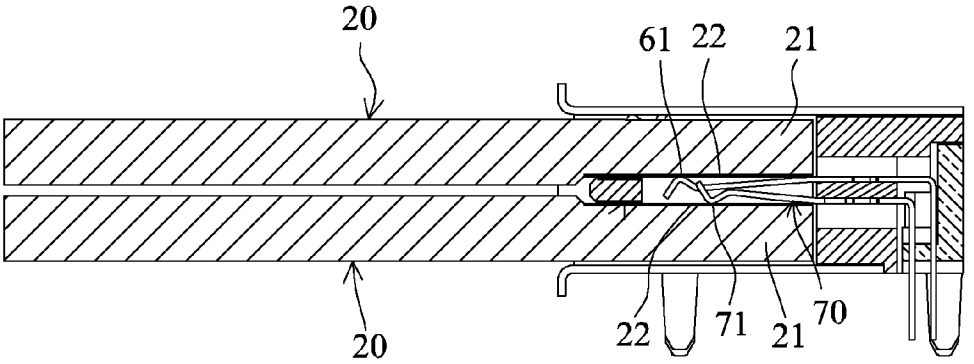

FIG. 19

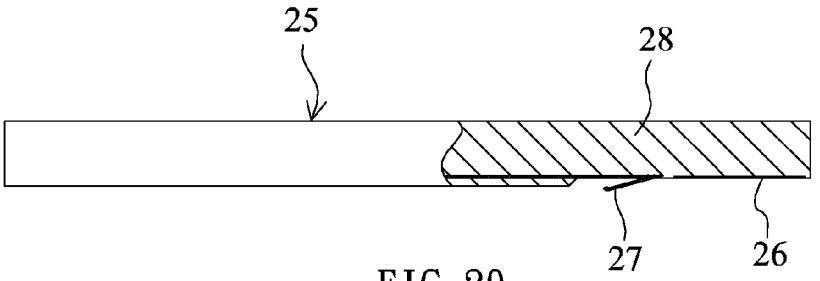

FIG. 20

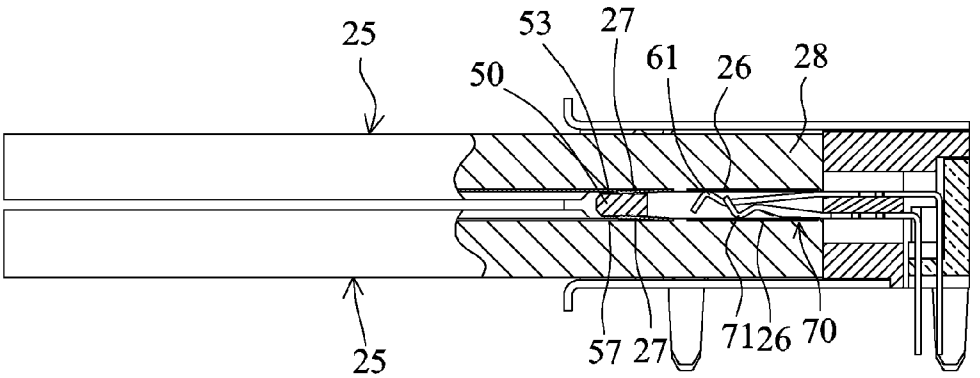

FIG. 21

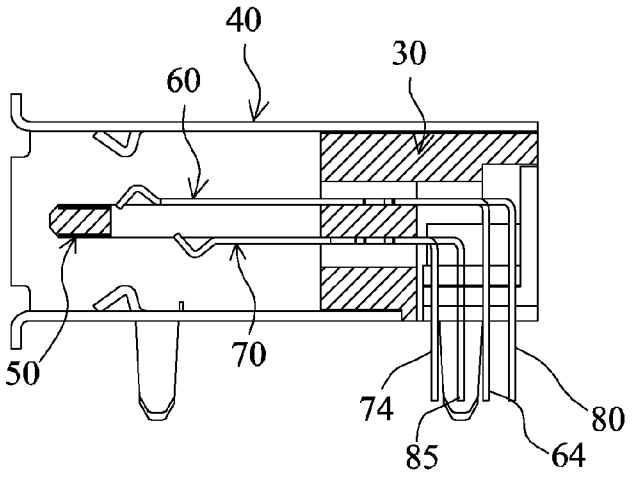

FIG. 22

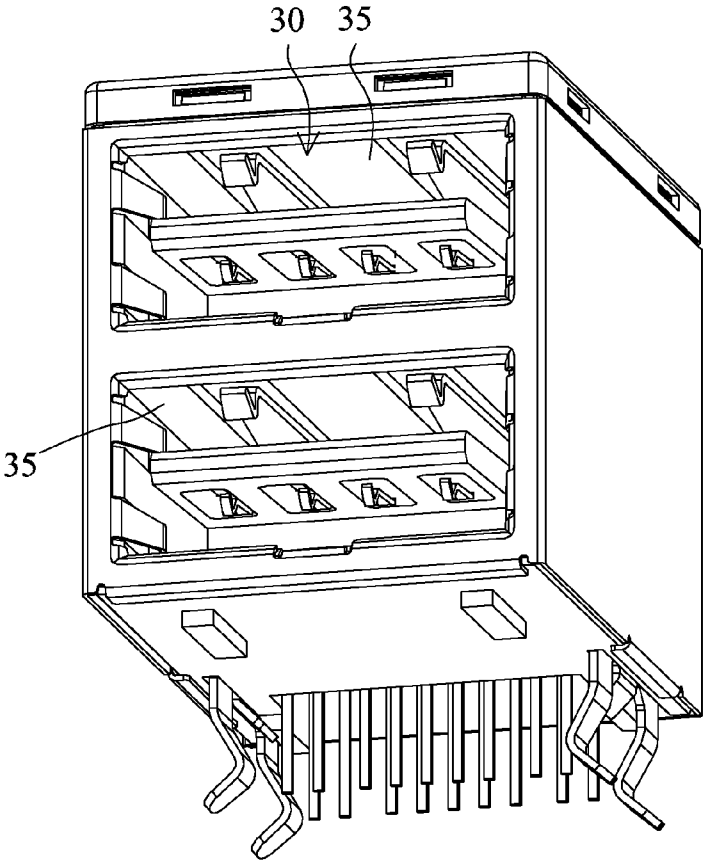

FIG. 23

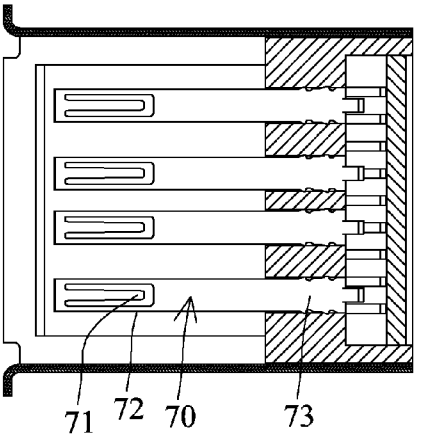

FIG. 26

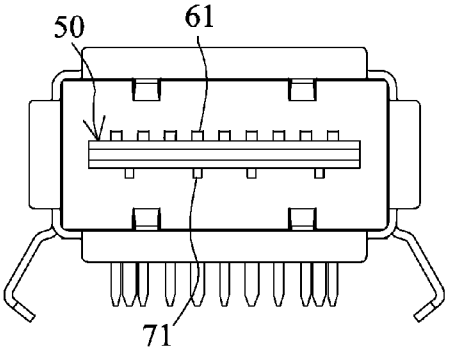

FIG. 25

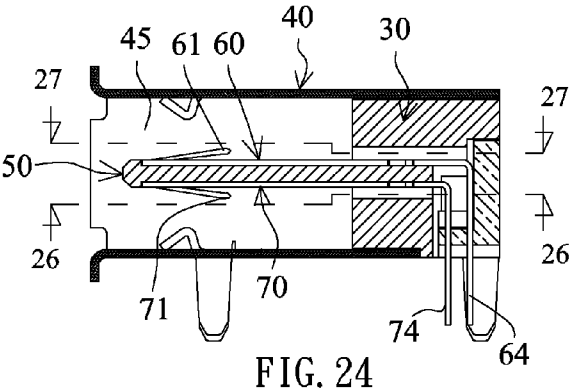

FIG. 24

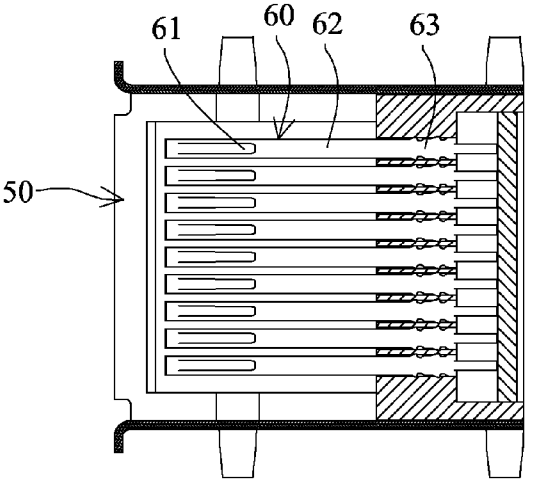

FIG. 27

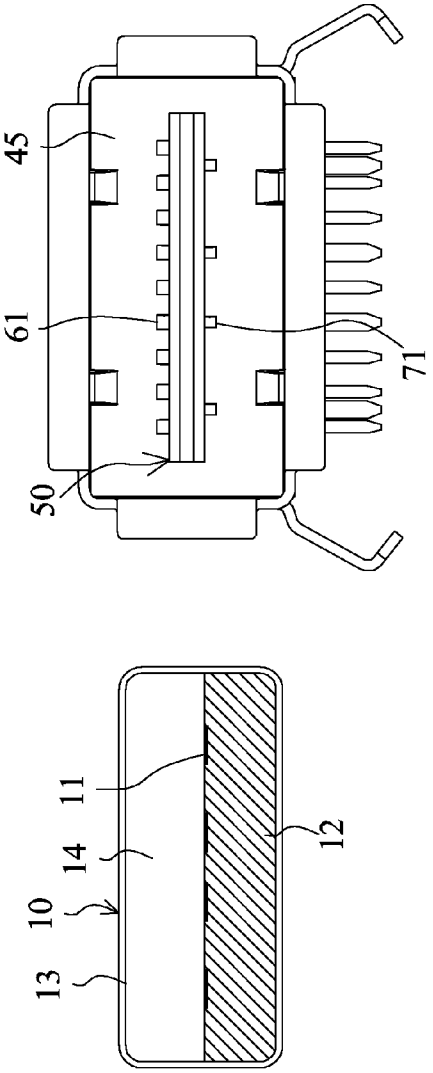

FIG. 28

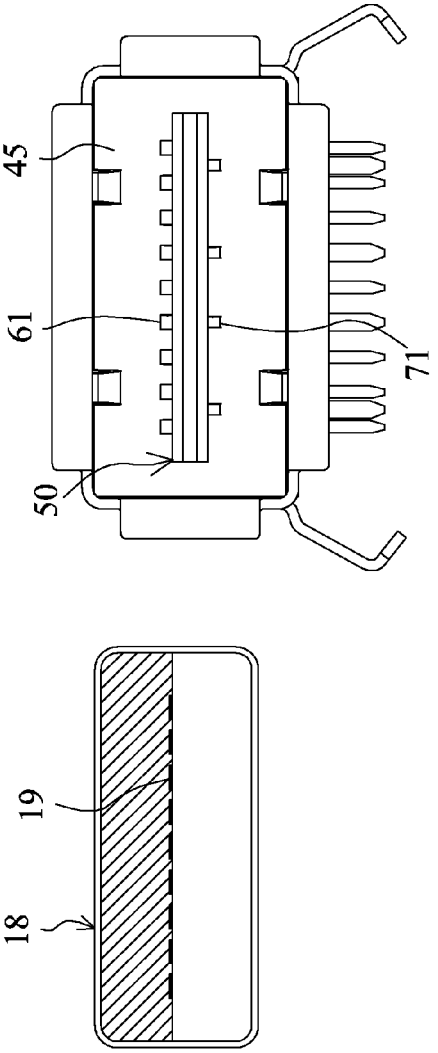

FIG. 29

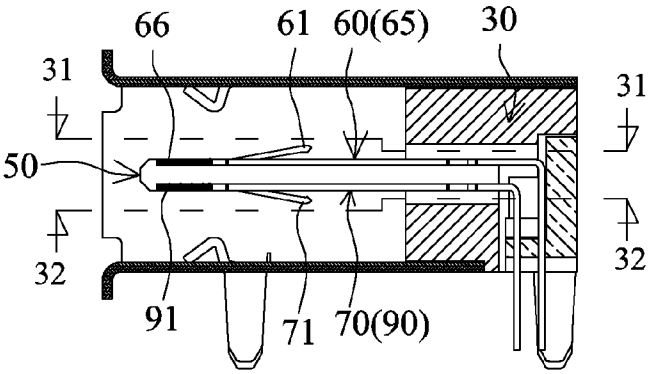

FIG. 30

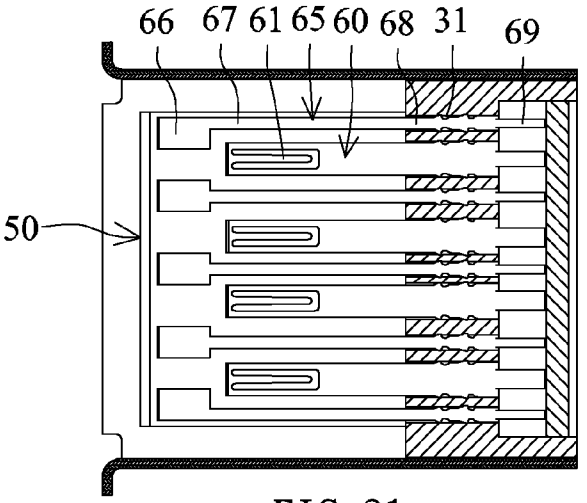

FIG. 31

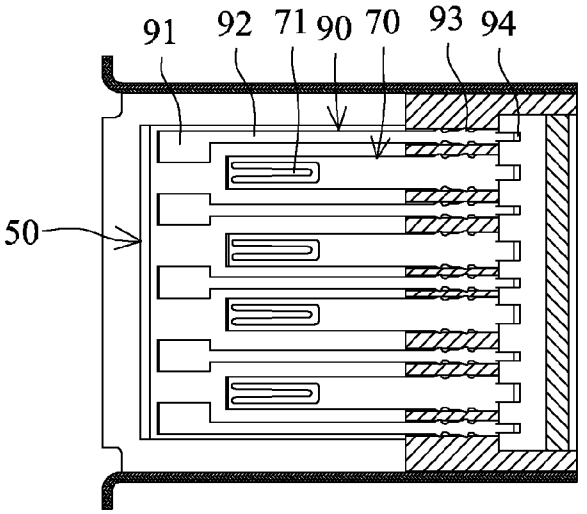

FIG. 32

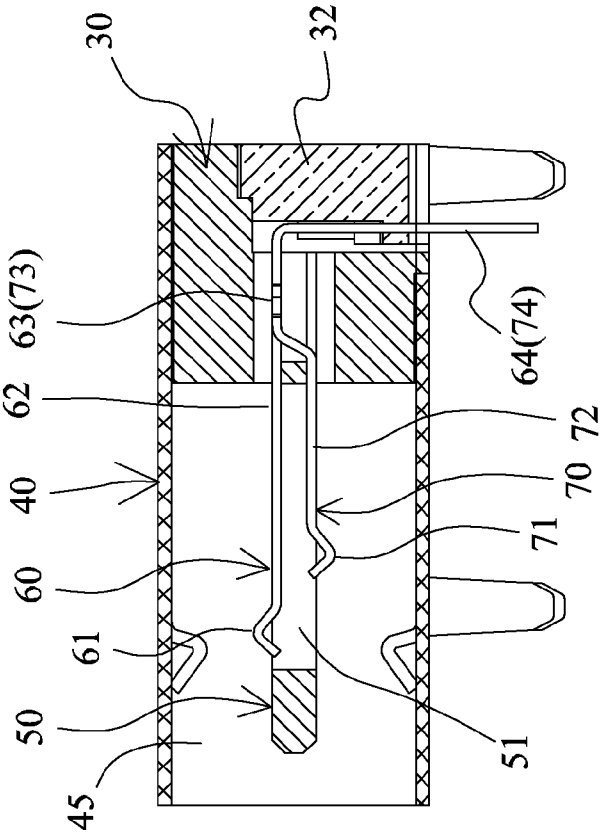

FIG. 34

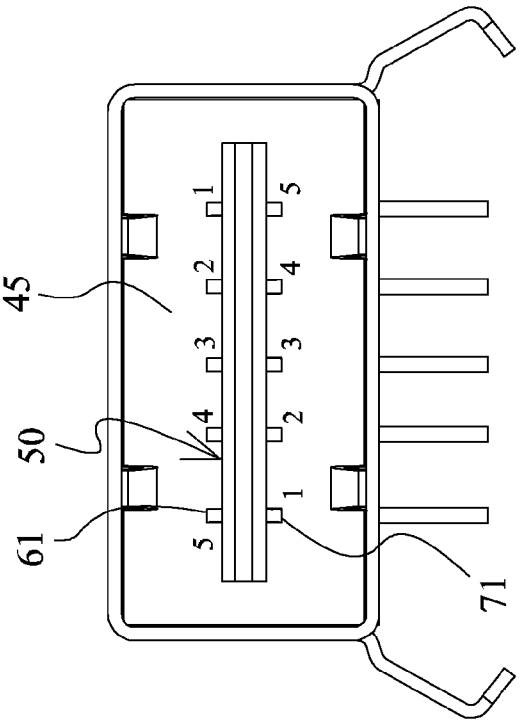

FIG. 33

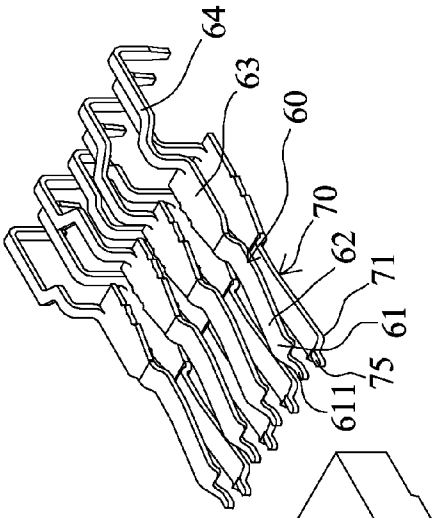

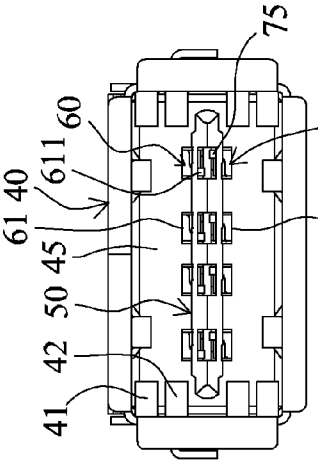

FIG. 37

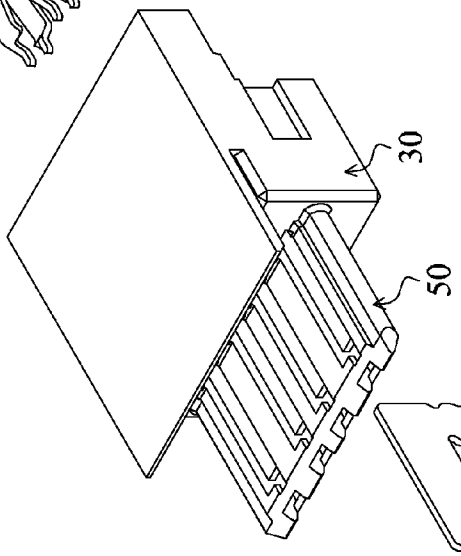

FIG. 35

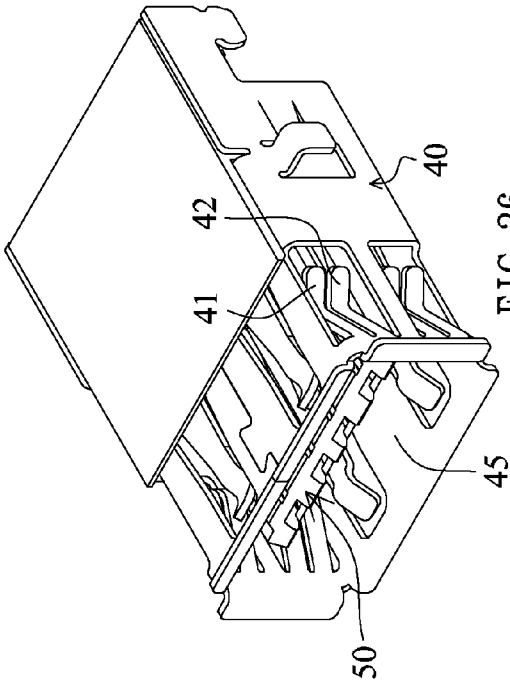

FIG. 36

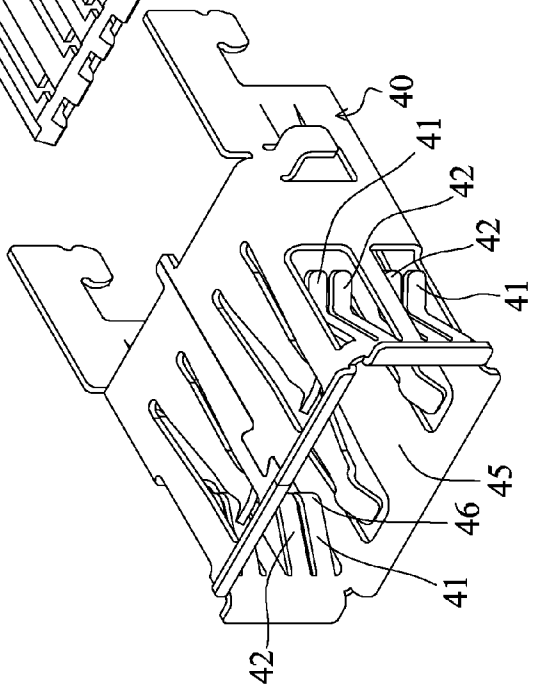

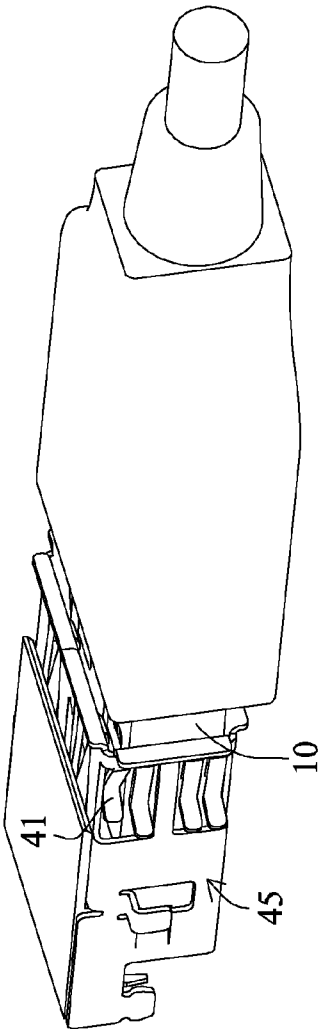

FIG. 40

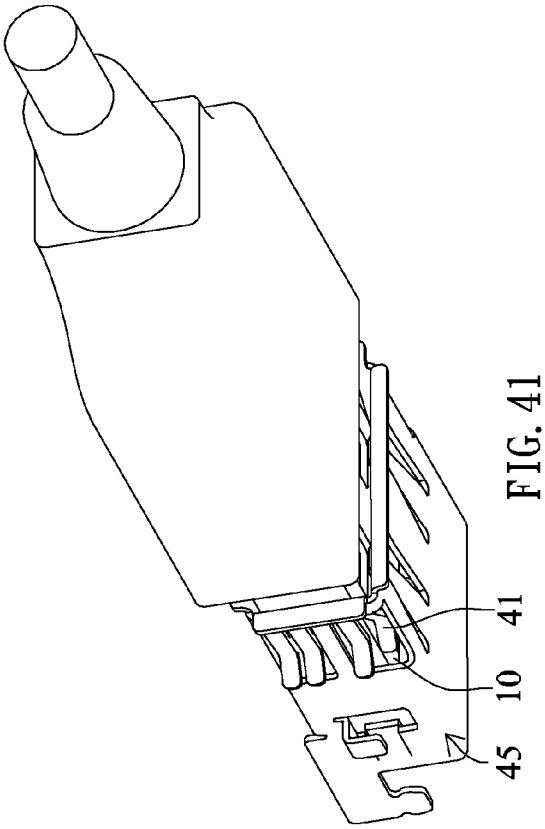

FIG. 41

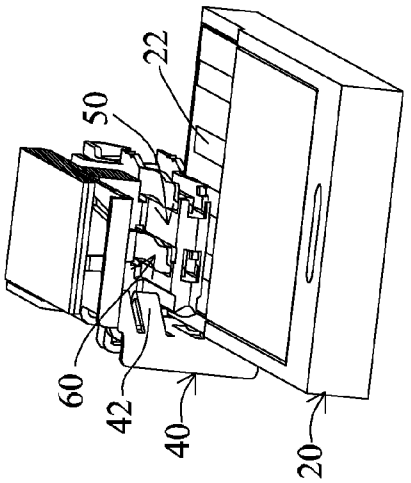

FIG. 38

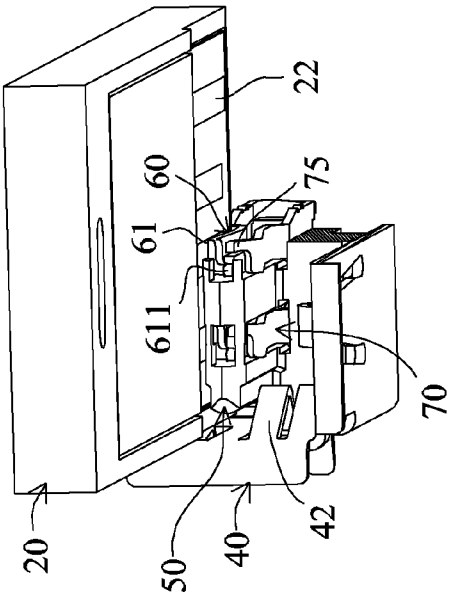

FIG. 39

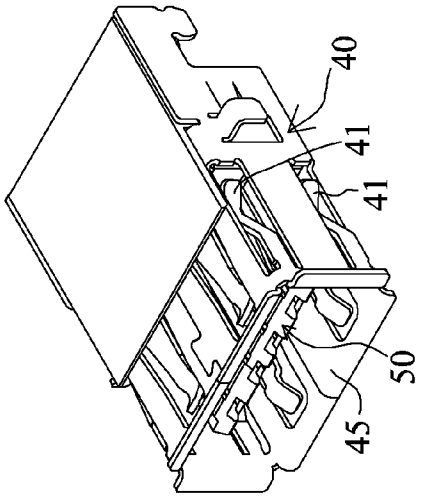

FIG. 42

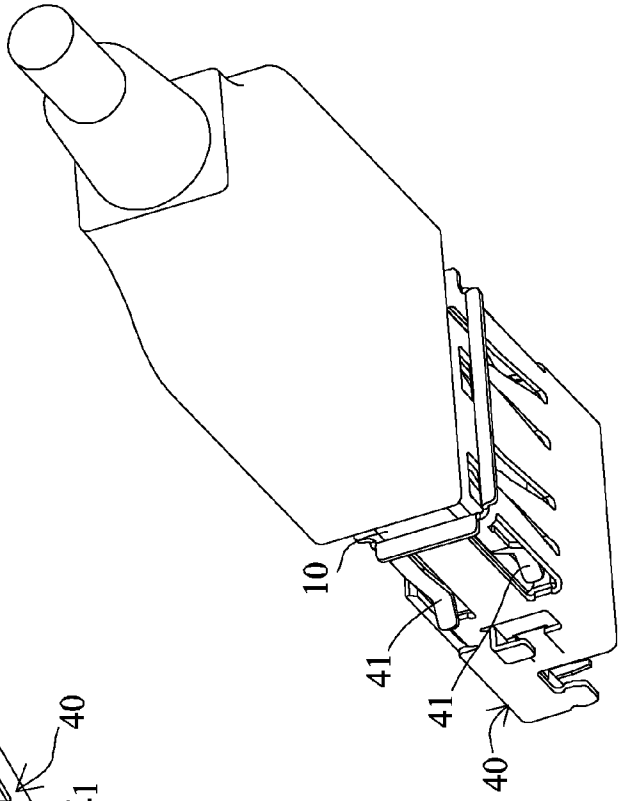

FIG. 44

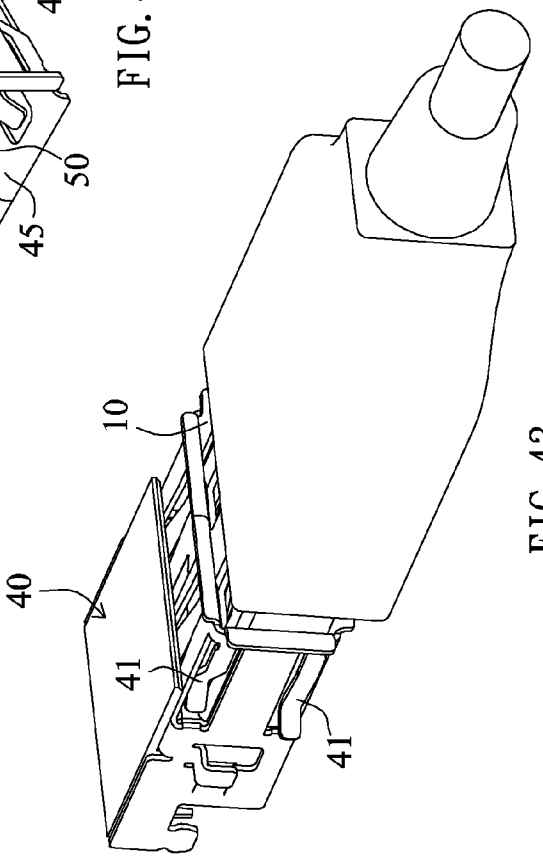

FIG. 43

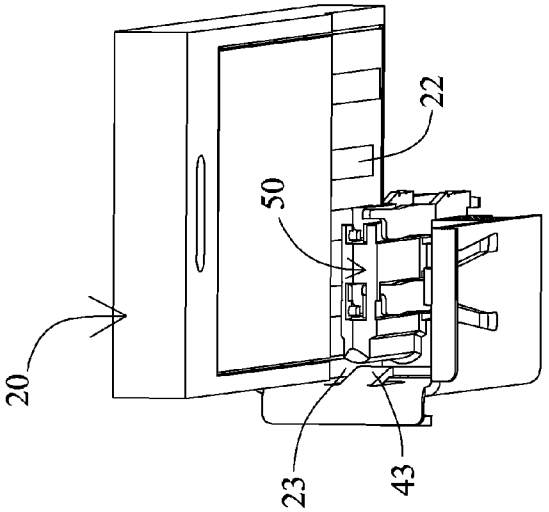

FIG. 47

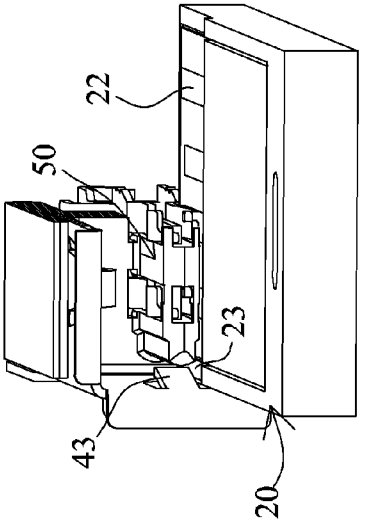

FIG. 46

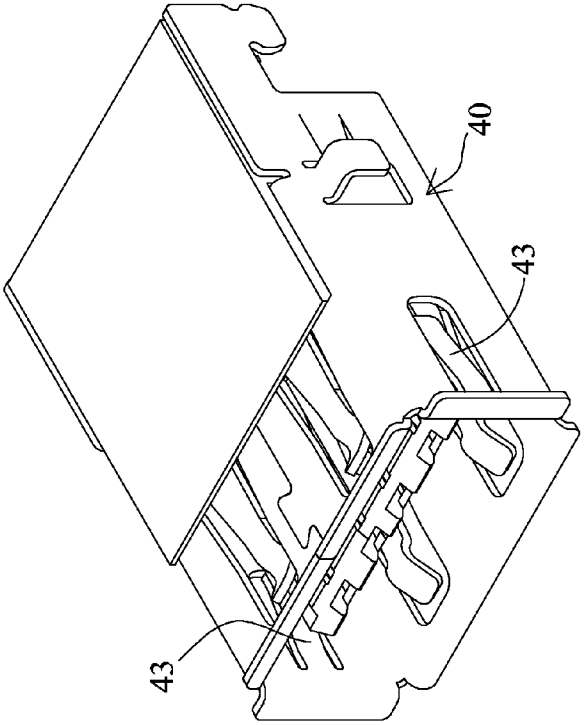

FIG. 45

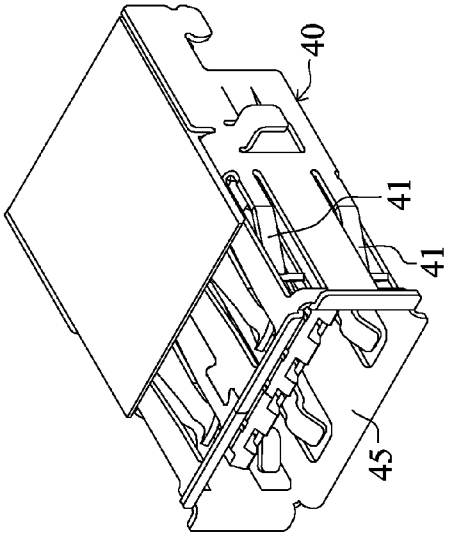

FIG. 50

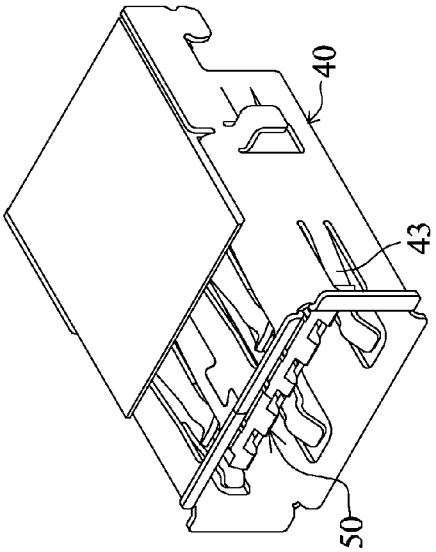

FIG. 51

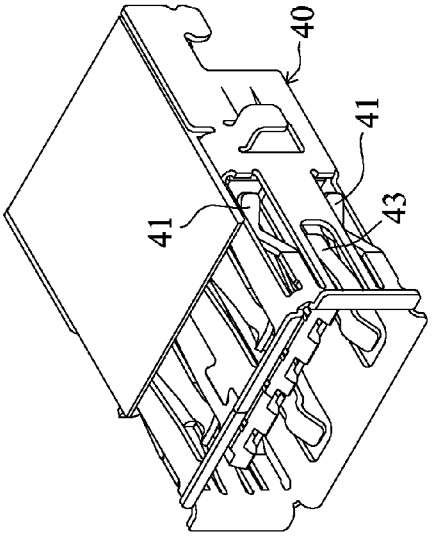

FIG. 48

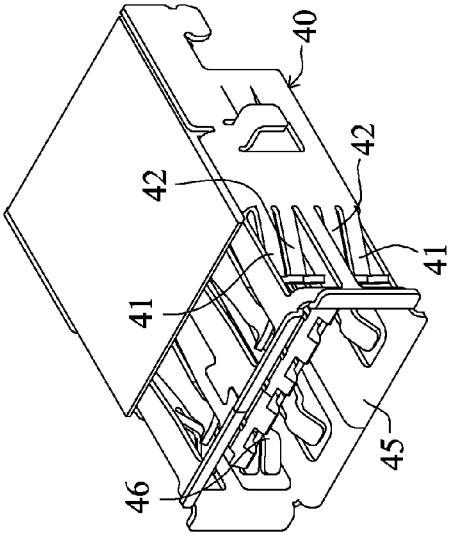

FIG. 49

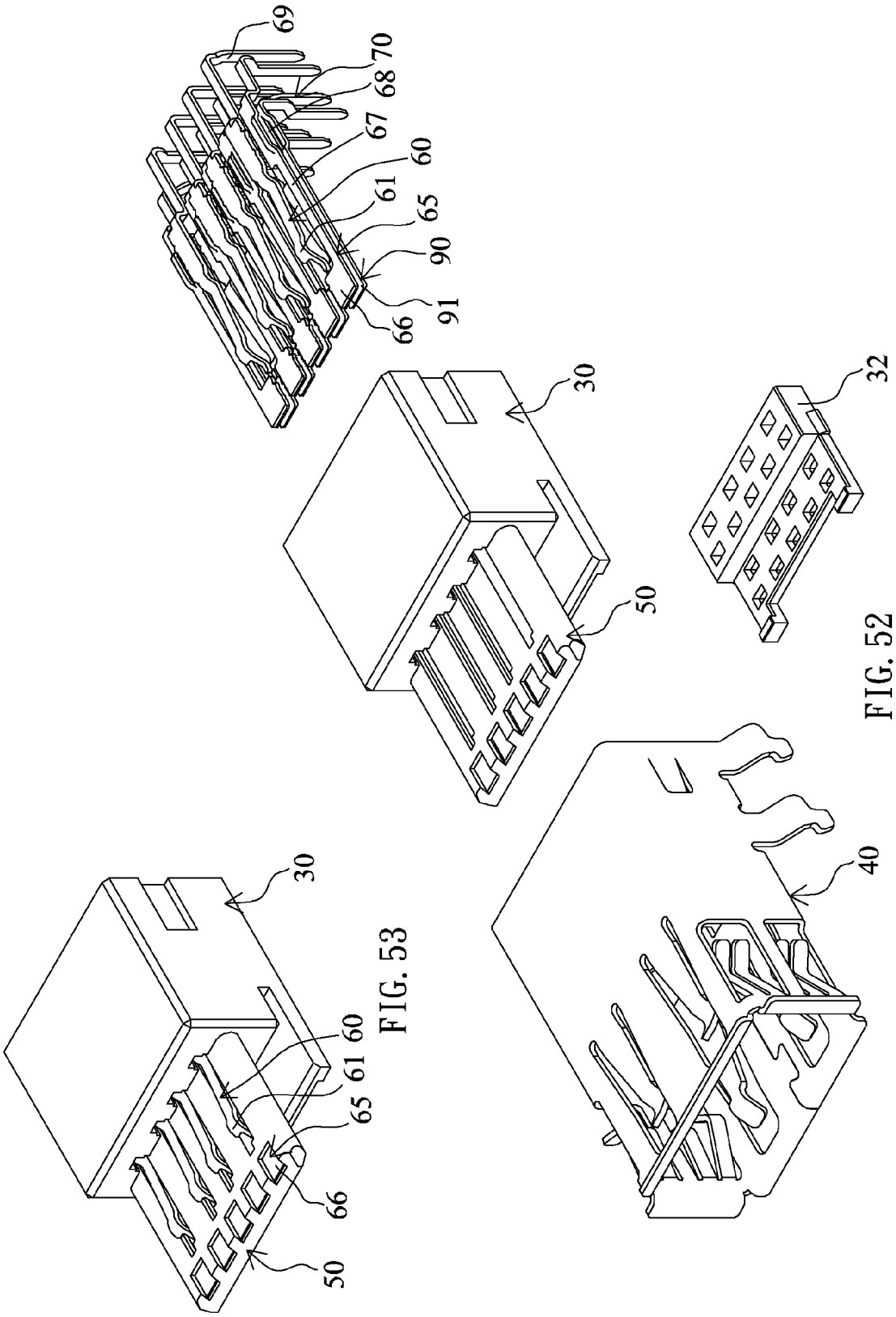

FIG. 52

FIG. 53

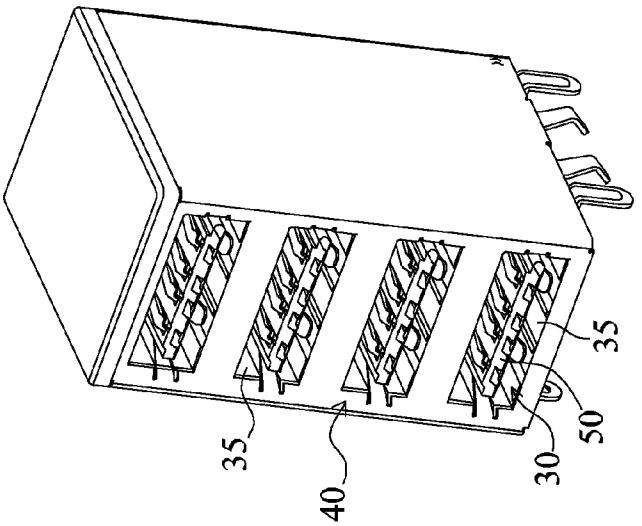

FIG. 54

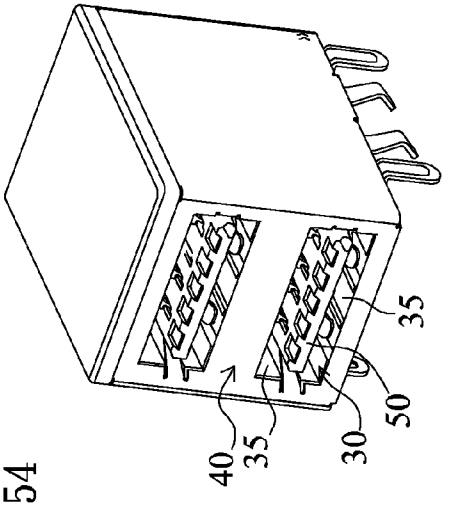

FIG. 55

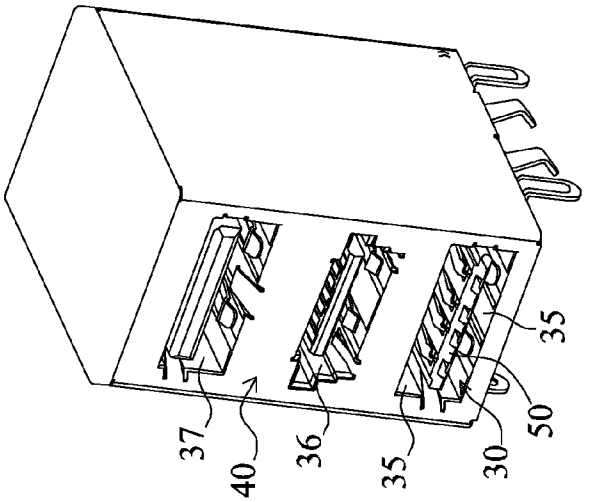

FIG. 56

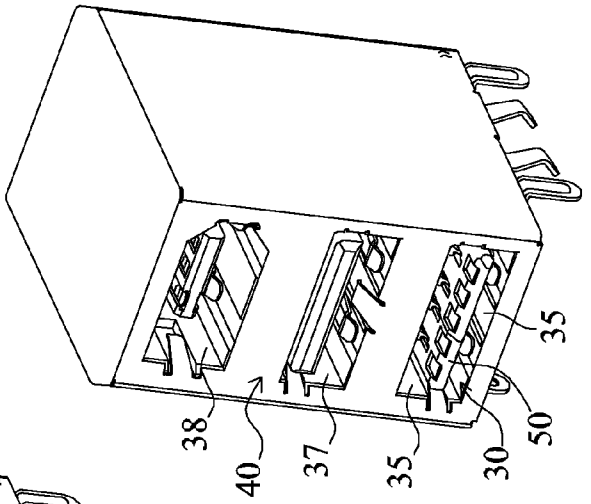

FIG. 57

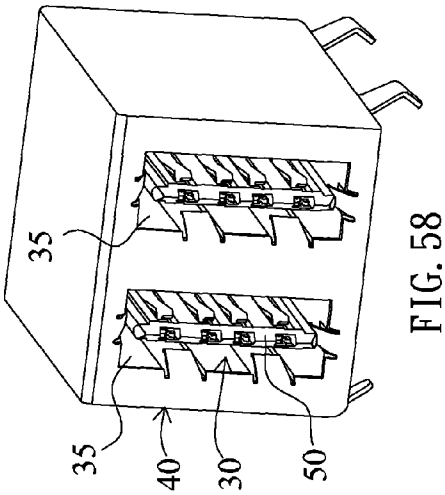

FIG. 58

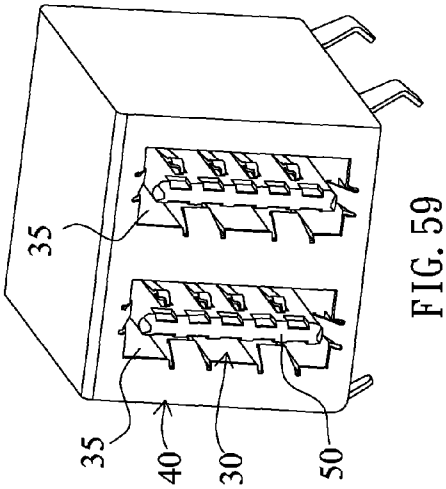

FIG. 59

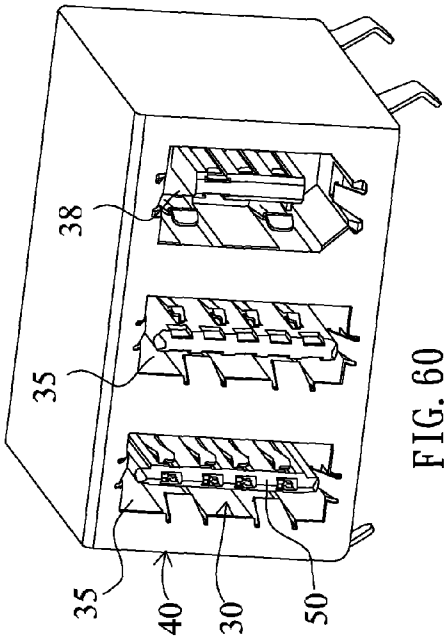

FIG. 60

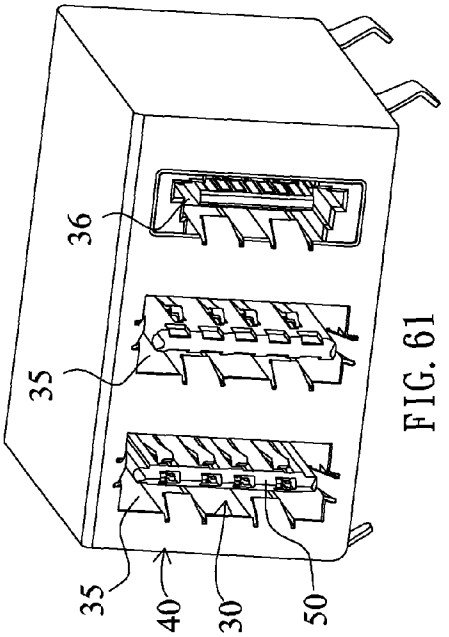

FIG. 61

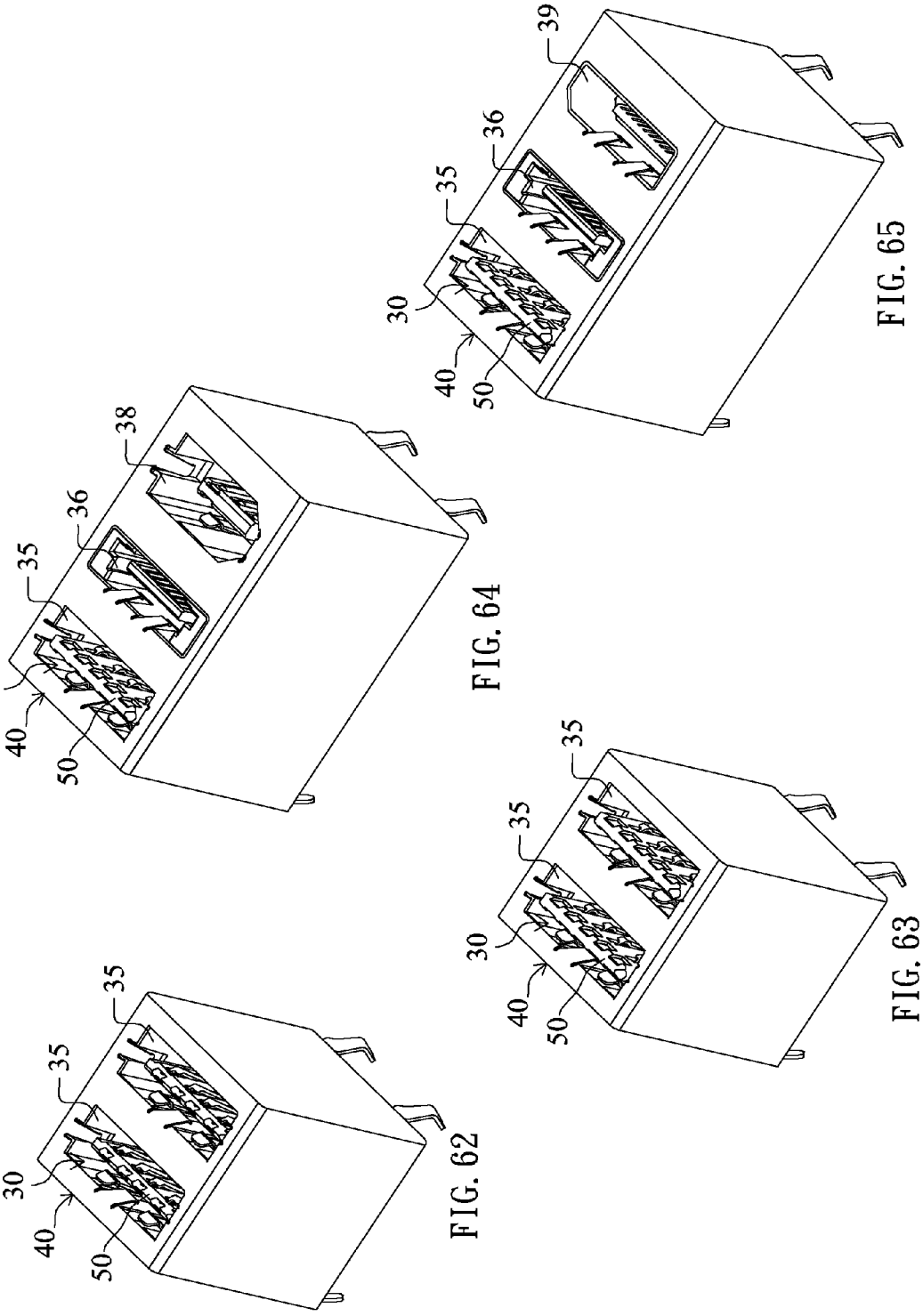

FIG. 62

FIG. 63

FIG. 64

FIG. 65

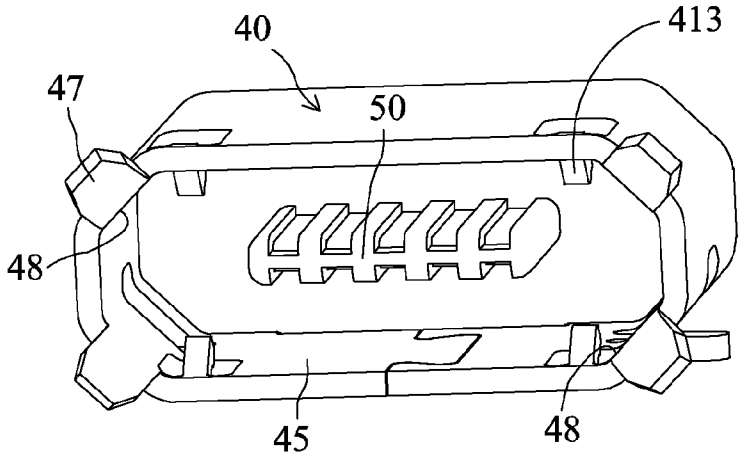

FIG. 66

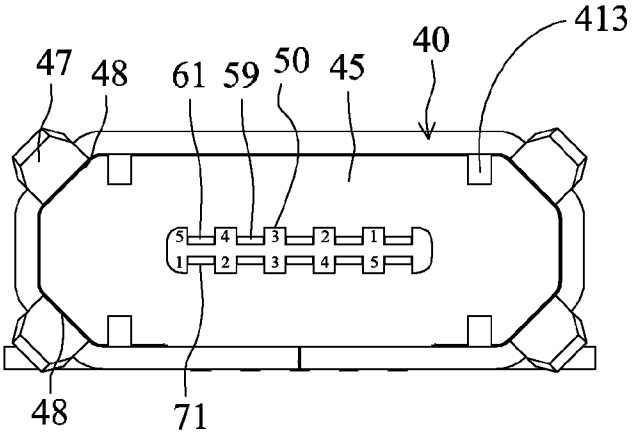

FIG. 67

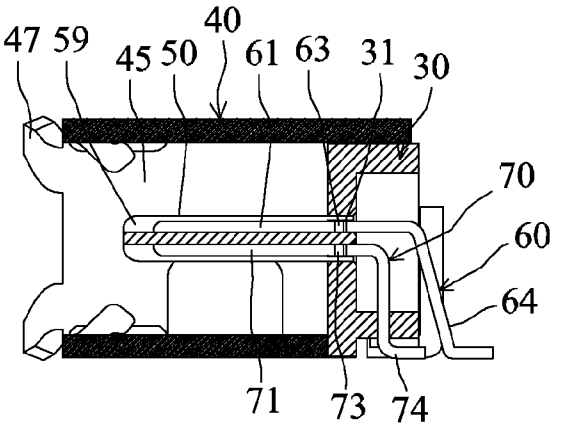

FIG. 68

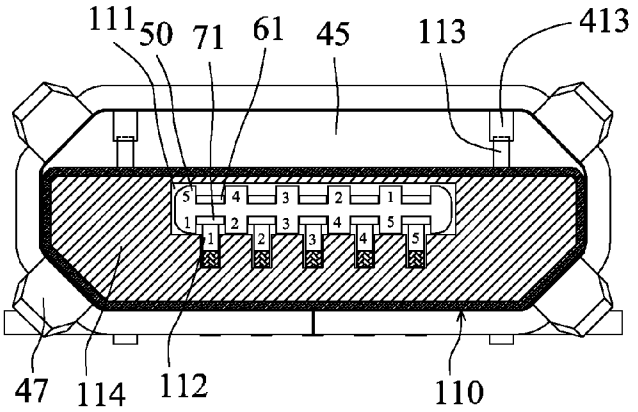

FIG. 69

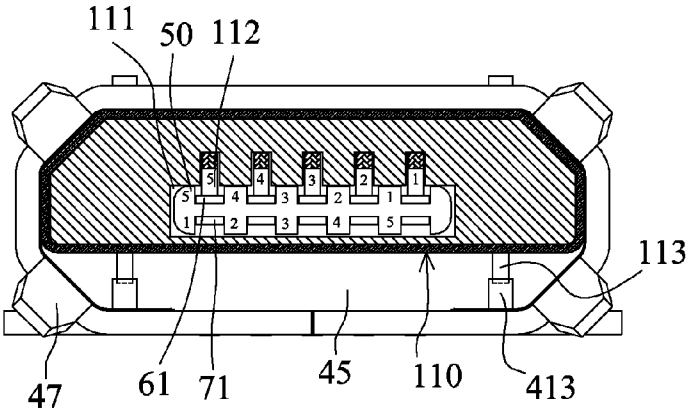

FIG. 70

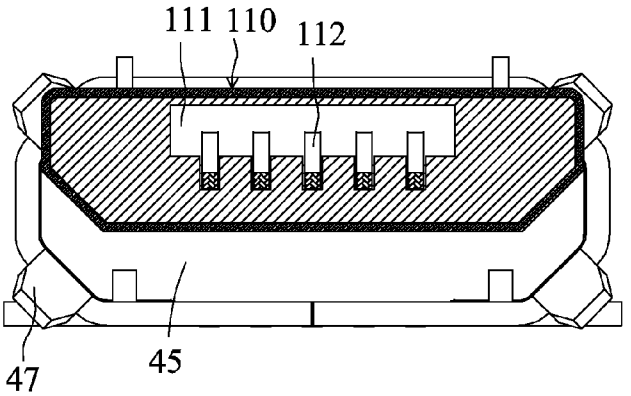

FIG. 71

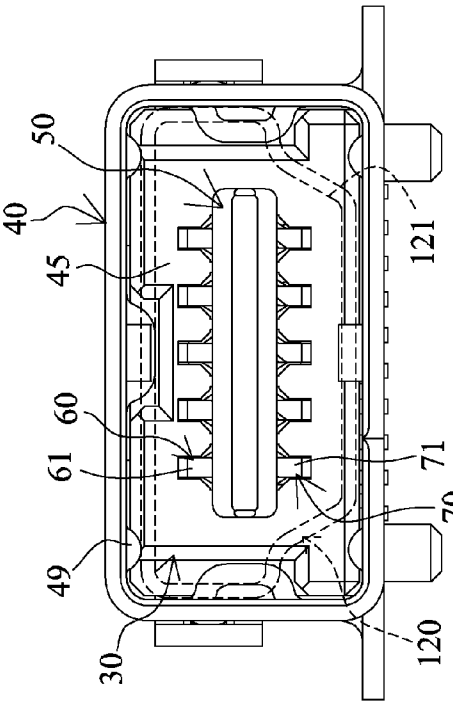

FIG. 74

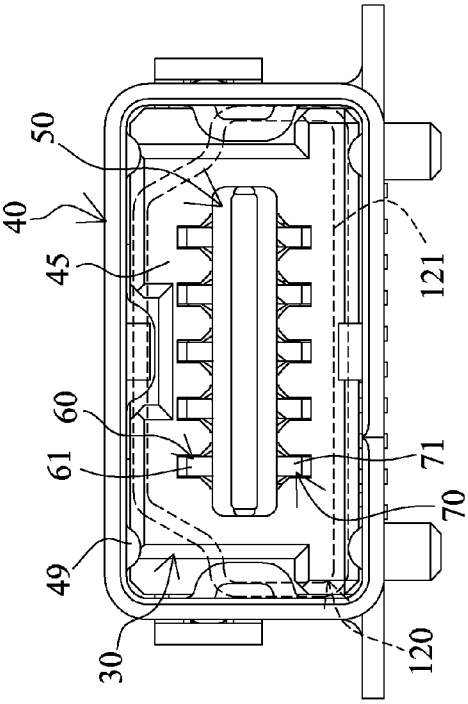

FIG. 75

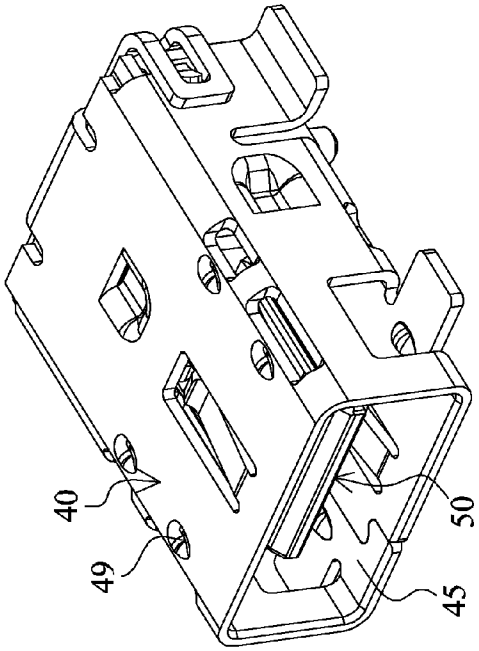

FIG. 72

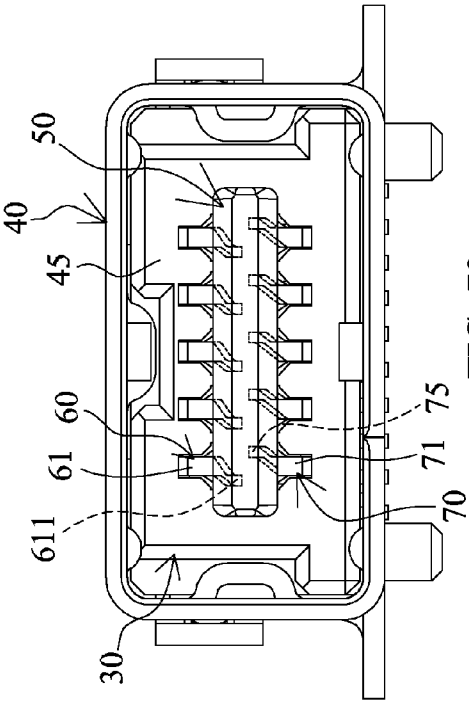

FIG. 73

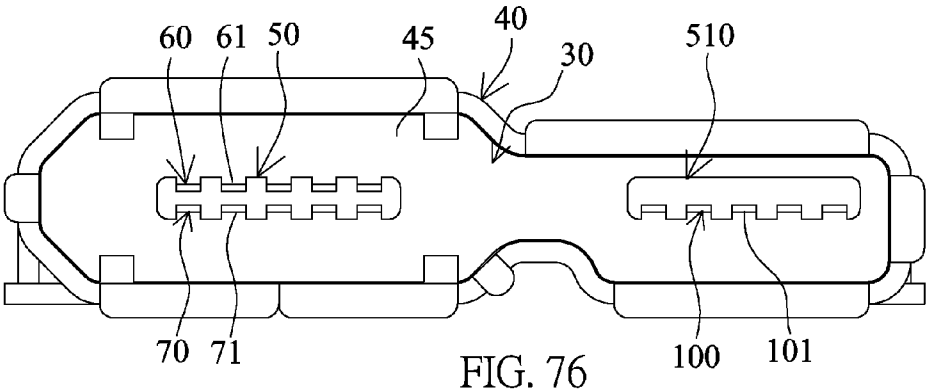

FIG. 76

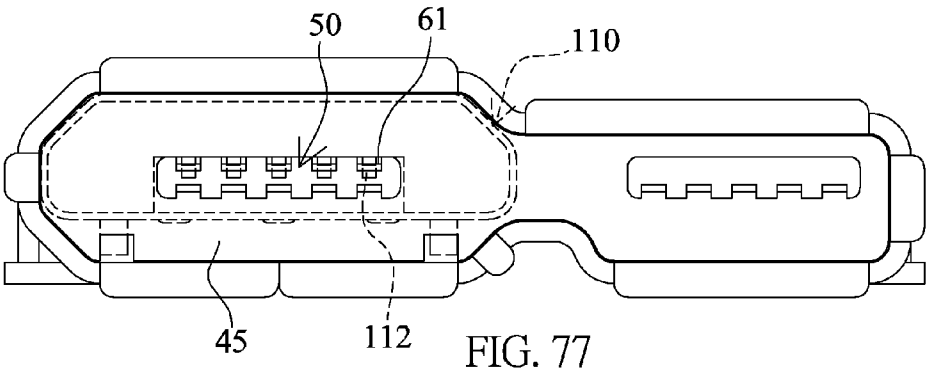

FIG. 77

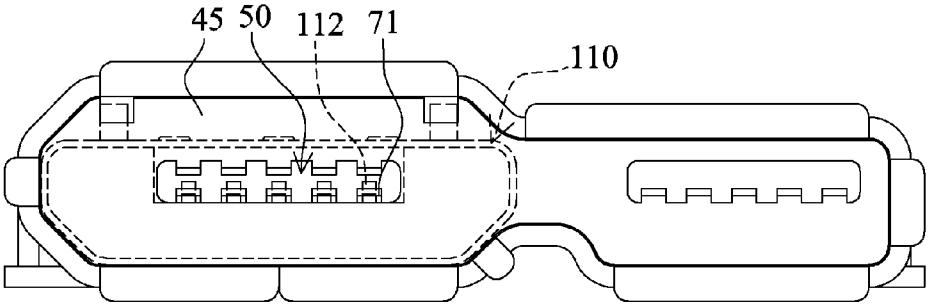

FIG. 78

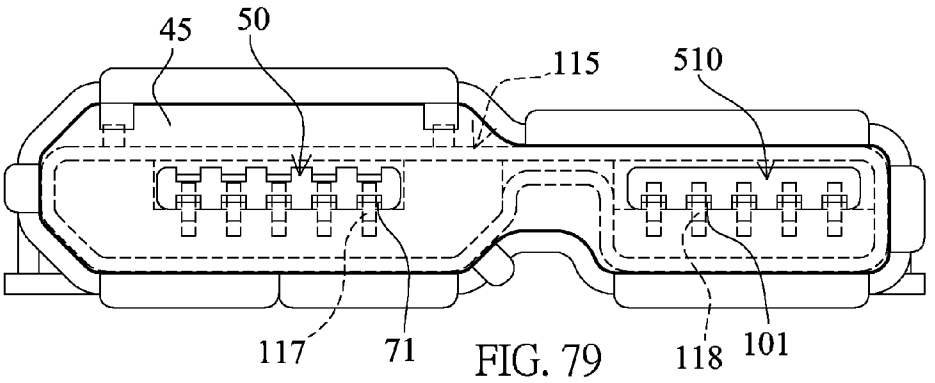

FIG. 79

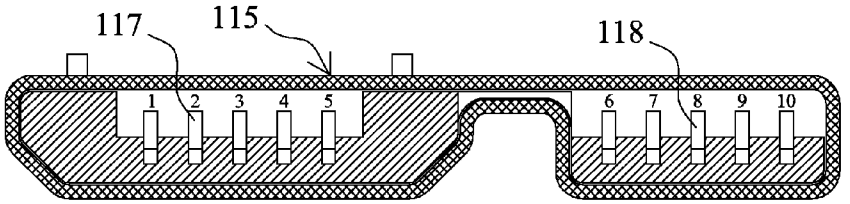

FIG. 80

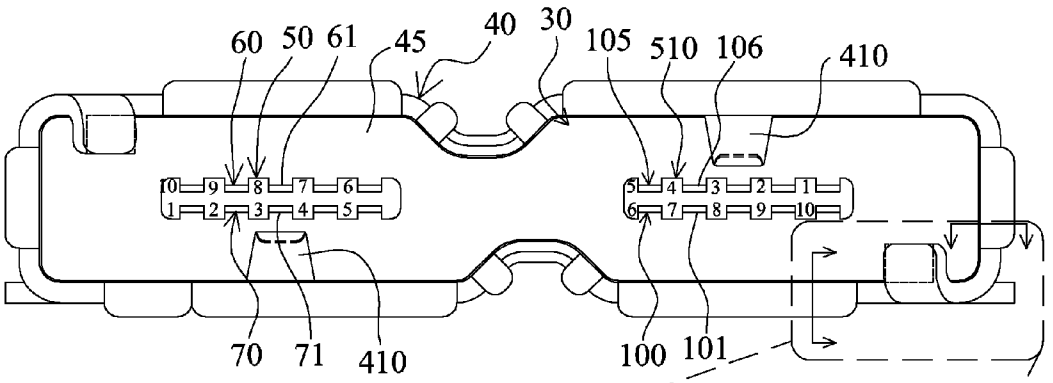

FIG. 81

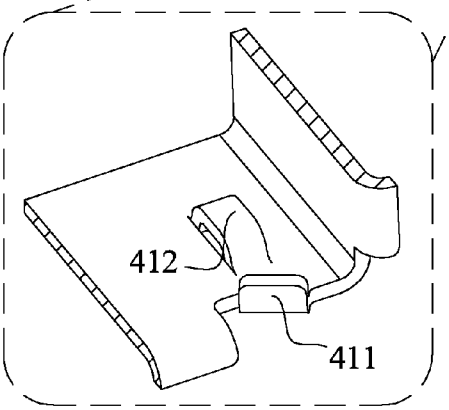

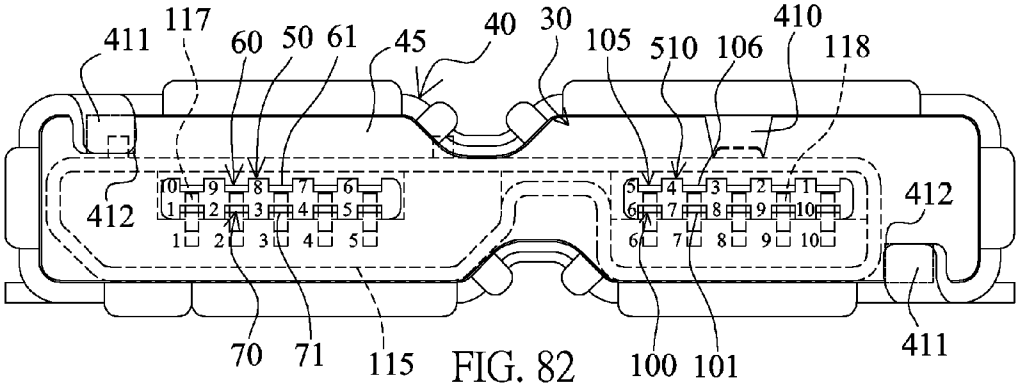

FIG. 82

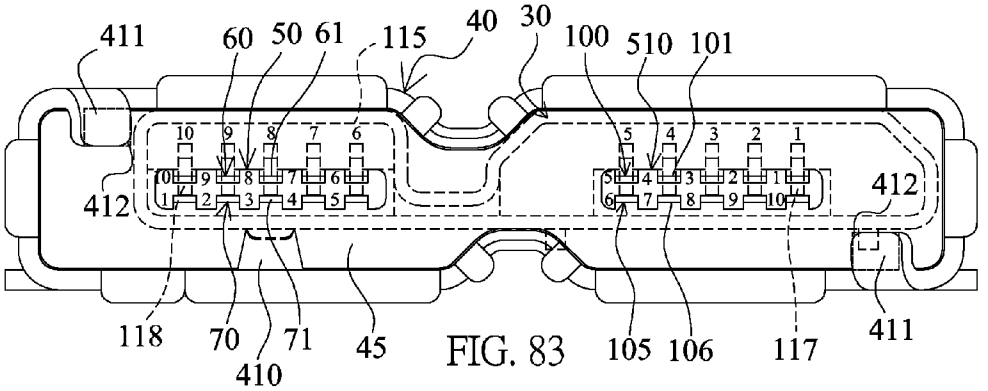

FIG. 83

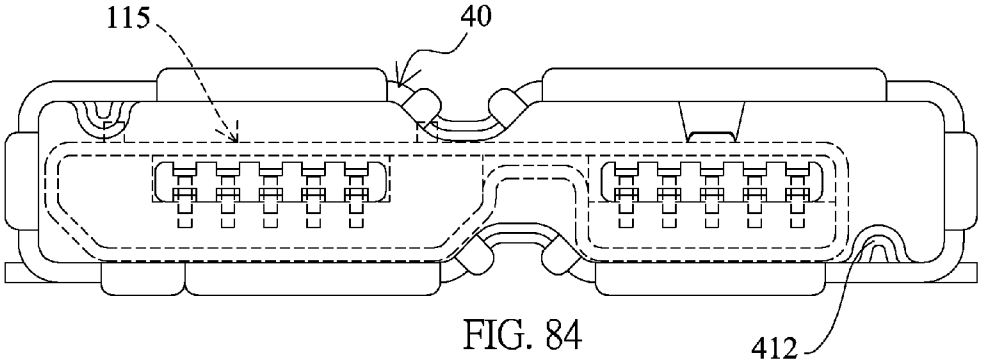

FIG. 84

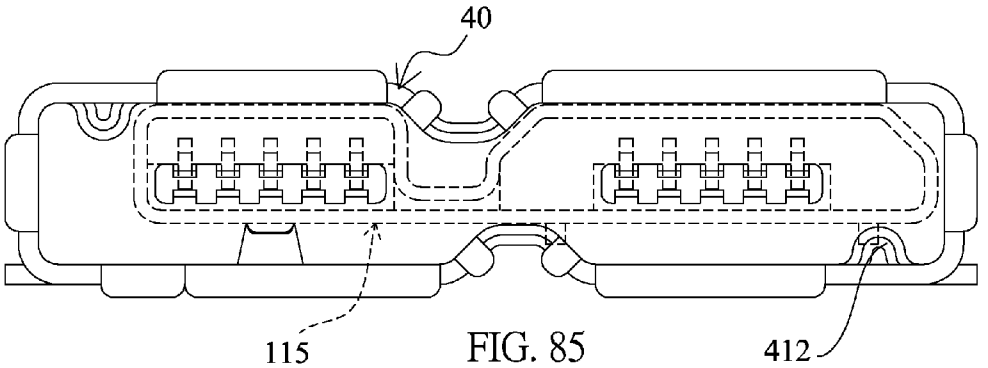

FIG. 85

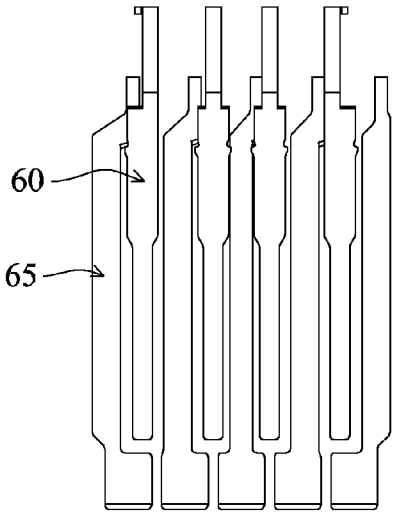

FIG. 86

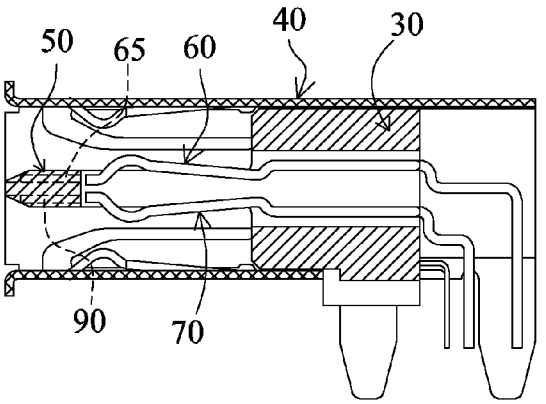

FIG. 87

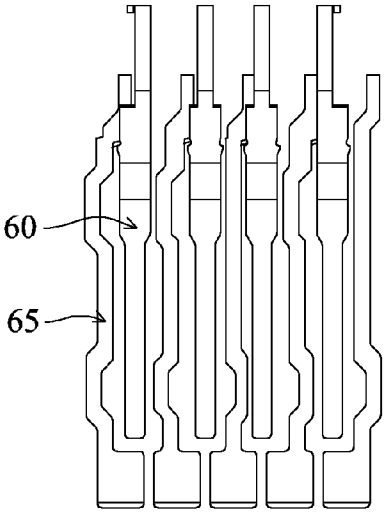

FIG. 88

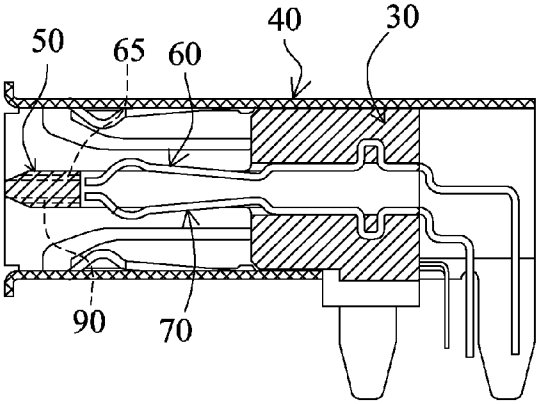

FIG. 89

SOCKET STRUCTURE WITH DUPLEX ELECTRICAL CONNECTION

BACKGROUND OF THE INVENTION

1. Field of the Invention

The invention relates to an electrical connector, and more particularly to a socket structure with duplex electrical connection.

2. Related Art

The most popular signal transmission specification of the modern computer apparatus is the universal serial bus (USB). A connector socket and a transmission cable satisfying this specification may make peripheral apparatuses, such as a mouse, a keyboard and the like, which are externally connected to the computer, be immediately detected and used by the computer.

Only one surface of the USB plug has one row of connection terminals. So, one surface of a tongue of the current USB socket has one row of connection terminals. In use, the USB plug has to be correctly inserted so that the connection terminals of the USB plug and the USB socket may be electrically connected together.

In order to ensure the inserted USB plug to be electrically connected to the USB socket, the USB plug and socket have mistake-proof designs. That is, when the USB plug cannot be oppositely inserted, the user has to turn the USB plug and then insert the USB plug so that the electrical connection may be ensured after the insertion.

The user usually randomly inserts the USB plug into the USB socket. So, the possibility of incapable of inserting the USB plug reaches 50%. The user often has to insert the USB plug twice in an inconvenient manner.

Furthermore, the types of the plugs are gradually increased day after day. Also, the USB plugs having the same external shape may have different connection interfaces. If two plugs having the same external shape but different connection interfaces may be inserted into and electrically connected to the same socket, the usage of the socket may be diversified.

SUMMARY OF THE INVENTION

It is therefore an object of the invention to provide a socket structure with duplex electrical connection, wherein a plug may be normally and oppositely inserted into the socket structure to create electrical connection in a simple and easy way.

Another object of the invention is to provide a socket structure with duplex electrical connection, wherein the socket structure may be used as a dual-slot and may be simultaneously electrically connected to two plugs.

Still another object of the invention is to provide a socket structure with duplex electrical connection, wherein the socket structure may be electrically connected to two plugs, which have the same external shapes but different connection interfaces, in a diversified manner.

Yet still another object of the invention is to provide a socket structure with duplex electrical connection, wherein guide-in sheets of terminals on two surfaces of a tongue are vertically staggered so that the terminals on two surfaces of the tongue may be elastically moved alternately, the larger elastic moving chamber may be obtained and the contact of the terminal has the larger surface contact area.

Yet still another object of the invention is to provide a socket structure with duplex electrical connection, wherein at least one side of a metal housing of the socket structure projects inwardly to form at least one laterally elastically movable elastic sheet, and when a plug is inserted into a connection slot, the at least one elastic sheet may rest against the plug or the tongue to prevent the plug from being turned to break the tongue.

To achieve the above-identified objects, the invention provides a socket structure with duplex electrical connection. The socket structure includes a plastic base; a connection slot, disposed on one end of the base and to be connected to one plug having one row of terminals; a tongue disposed on a front end of the base and within the slot so that chambers of the slot on two sides of the tongue may be normally and oppositely inserted and positioned into the slot; one row of first contacts separately arranged on one surface of the tongue, wherein each first contact is electrically connected to a first pin extending out of the base; and one row of second contacts separately arranged on the other surface of the tongue, wherein each second contact is electrically connected to a second pin extending out of the base. When the plug is inserted into the slot, the row of terminals of the plug are electrically connected to the row of first or second contacts.

A metal housing covering the plastic base may further be provided. At least one side of the metal housing projects inwardly to form at least one laterally elastically movable elastic sheet. When the plug is inserted into the connection slot, the at least one elastic sheet may rest against the plug or the tongue to prevent the plug from turning.

The at least one row of first contacts and the first pins are formed on at least one row of first terminals. The at least one row of second contacts and the second pins are formed on at least one row of second terminals. The first contact and the second contact respectively project beyond one surface of the tongue. The row of first terminals and the row of second terminals pertain to the same connection interface and have oppositely arranged serial numbers. The front end of the first contact has a first guide-in sheet. The front end of the second contact has a second guide-in sheet. The first contact and the second contact are vertically aligned, and the first guide-in sheet and the second guide-in sheet are staggered in a left to right direction.

Further scope of the applicability of the present invention will become apparent from the detailed description given hereinafter. However, it should be understood that the detailed description and specific examples, while indicating preferred embodiments of the invention, are given by way of illustration only, since various changes and modifications within the spirit and scope of the invention will become apparent to those skilled in the art from this detailed description.

BRIEF DESCRIPTION OF THE DRAWINGS

The present invention will become more fully understood from the detailed description given hereinbelow and the accompanying drawings which are given by way of illustration only, and thus are not limitative of the present invention.

FIG. **1** is a pictorial view showing a first embodiment of the invention.

FIG. **2** is a cross-sectional side view showing the first embodiment of the invention.

FIG. **3** is a cross-sectional top view showing the first embodiment of the invention.

FIG. **4** shows the usage state of the first embodiment of the invention.

FIG. **4**A is a front view showing the first embodiment of the invention and the normal state of the USB 2.0 plug.

FIG. **5** shows the usage state of the first embodiment of the invention.

FIG. **5**A is a front view showing the first embodiment of the invention and the opposite state of the USB 2.0 plug.

FIG. **6** is a cross-sectional side view showing a second embodiment of the invention.

FIG. **7** is a cross-sectional side view showing a third embodiment of the invention.

FIG. **8** is a cross-sectional side view showing a fourth embodiment of the invention.

FIG. **9** is a cross-sectional top view showing the fourth embodiment of the invention.

FIG. **10** is a cross-sectional side view showing a fifth embodiment of the invention.

FIG. **11** is a cross-sectional top view showing the fifth embodiment of the invention.

FIG. **12** is a front view showing the fifth embodiment of the invention.

FIG. **13** is a cross-sectional side view showing a sixth embodiment of the invention.

FIG. **14** is a cross-sectional top view showing the sixth embodiment of the invention.

FIG. **15** is a cross-sectional bottom view showing the sixth embodiment of the invention.

FIGS. **16** and **17** show the usage states of the sixth embodiment of the invention.

FIG. **18** is a pictorial view showing a light and handy mobile disk.

FIG. **19** shows the usage state of the sixth embodiment of the invention.

FIG. **20** is a side view showing another light and handy mobile disk.

FIG. **21** shows the usage state of the sixth embodiment of the invention.

FIG. **22** is a cross-sectional side view showing a seventh embodiment of the invention.

FIG. **23** is a pictorial view showing an eighth embodiment of the invention.

FIG. **24** is a cross-sectional side view showing a ninth embodiment of the invention.

FIG. **25** is a front view showing the ninth embodiment of the invention.

FIG. **26** is a cross-sectional bottom view showing the ninth embodiment of the invention.

FIG. **27** is a cross-sectional top view showing the ninth embodiment of the invention.

FIGS. **28** and **29** show the usage states of the ninth embodiment of the invention.

FIG. **30** is a cross-sectional side view showing a tenth embodiment of the invention.

FIG. **31** is a cross-sectional top view showing the tenth embodiment of the invention.

FIG. **32** is a cross-sectional bottom view showing the tenth embodiment of the invention.

FIG. **33** is a cross-sectional front view showing an eleventh embodiment of the invention.

FIG. **34** is a cross-sectional side view showing the eleventh embodiment of the invention.

FIG. **35** is a pictorially exploded view showing a twelfth embodiment of the invention.

FIG. **36** is a pictorially assembled view showing the twelfth embodiment of the invention.

FIG. **37** is a front view showing the twelfth embodiment of the invention.

FIGS. **38** to **41** are pictorial views showing the usage states of the twelfth embodiment of the invention.

FIG. **42** is a pictorially assembled view showing a thirteenth embodiment of the invention.

FIGS. **43** and **44** are pictorial views showing the usage states of the thirteenth embodiment of the invention.

FIG. **45** is a pictorially assembled view showing a fourteenth embodiment of the invention.

FIGS. **46** and **47** are pictorial views showing the usage states of the fourteenth embodiment of the invention.

FIG. **48** is a pictorially assembled view showing a fifteenth embodiment of the invention.

FIG. **49** is a pictorially assembled view showing a sixteenth embodiment of the invention.

FIG. **50** is a pictorially assembled view showing a seventeenth embodiment of the invention.

FIG. **51** is a pictorially assembled view showing an eighteenth embodiment of the invention.

FIG. **52** is a pictorially exploded view showing a nineteenth embodiment of the invention.

FIG. **53** is a pictorially assembled view showing terminals and a plastic base of the nineteenth embodiment of the invention.

FIG. **54** is a pictorially assembled view showing a 20th embodiment of the invention.

FIG. **55** is a pictorially assembled view showing a 21st embodiment of the invention.

FIG. **56** is a pictorially assembled view showing a 22nd embodiment of the invention.

FIG. **57** is a pictorially assembled view showing a 23rd embodiment of the invention.

FIG. **58** is a pictorially assembled view showing a 24th embodiment of the invention.

FIG. **59** is a pictorially assembled view showing a 25th embodiment of the invention.

FIG. **60** is a pictorially assembled view showing a 26th embodiment of the invention.

FIG. **61** is a pictorially assembled view showing a 27th embodiment of the invention.

FIG. **62** is a pictorially assembled view showing a 28th embodiment of the invention.

FIG. **63** is a pictorially assembled view showing a 29th embodiment of the invention.

FIG. **64** is a pictorially assembled view showing a 30th embodiment of the invention.

FIG. **65** is a pictorially assembled view showing a 31st embodiment of the invention.

FIG. **66** is a pictorially assembled view showing a 32nd embodiment of the invention.

FIG. **67** is a front view showing the 32nd embodiment of the invention.

FIG. **68** is a cross-sectional side view showing the 32nd embodiment of the invention.

FIGS. **69** to **71** show the usage states of the 32nd embodiment of the invention.

FIG. **72** is a pictorially assembled view showing a 33rd embodiment of the invention.

FIG. **73** is a front view showing the 33rd embodiment of the invention.

FIGS. **74** and **75** show the usage states of the 33rd embodiment of the invention.

FIG. **76** is a front view showing a 34th embodiment of the invention.

FIGS. **77** to **79** show the usage states of the 34th embodiment of the invention.

FIG. **80** is a cross-sectional view showing a micro USB 3.0 plug.

FIG. **81** is a front view showing a 35th embodiment of the invention.

FIGS. **82** and **83** show the usage states of the 35th embodiment of the invention.

FIGS. **84** and **85** show the usage states of a 36th embodiment of the invention.

FIG. **86** is a schematic top view showing terminals when the high frequency of the invention is increased.

FIG. **87** is a schematic side view showing the terminals when the high frequency of the invention is increased.

FIG. **88** is a schematic top view showing terminals when the high frequency of the invention is decreased.

FIG. **89** is a schematic side view showing the terminals when the high frequency of the invention is decreased.

DETAILED DESCRIPTION OF THE INVENTION

The present invention will be apparent from the following detailed description, which proceeds with reference to the accompanying drawings, wherein the same references relate to the same elements.

Referring to FIGS. **1** to **3**, a USB 2.0 socket of this embodiment includes a plastic base **30**, a metal housing **40**, a tongue **50**, one row of first terminals **60** and one row of second terminals **70**.

The plastic base **30** has one row of terminal slots **31**, and a rear cover **32** covers a rear end of the plastic base **30** from bottom to top.

The metal housing **40** covers the plastic base **30**. A front section of the metal housing is formed with a connection slot **45**, which may be electrically connected to a USB 2.0 plug.

The tongue **50** and the plastic base **30** are integrally injection molded together. The tongue **50** has a first surface **501** and a second surface **502** disposed opposite the first surface **501**, and is horizontally disposed on the front end of the plastic base **30** and at a middle of the connection slot **45**, such that the connection slot **45** is formed with compatible and symmetrical profiles on top and bottom sides of the tongue **50** and compatible and symmetrical profiles on left and right sides of the tongue **50**. Thus, the USB 2.0 plug is normally and oppositely inserted and positioned into the connection slot **45** to create the bidirectional insertion and connection, and the tongue **50** has four through slots **51** separately arranged.

One row of four first terminals **60** are separately arranged and fixed to the plastic base **30**. The first terminal is integrally formed with a first contact **61**, a first extension **62**, a first fixing portion **63** and a first pin **64**. The first fixing portion **63** is fixed to the terminal slot **31** of the plastic base **30**. The first contact **61**, arranged on the first surface **501** of the tongue **50**, projects beyond the top of the tongue **50** and is elastically moved in correspondence with the through slot **51**. The first pin **64** extends out of the plastic base **30**.

The one row of second terminals **70** and the one row of first terminals **60** pertain to the same connection interface and the terminals have oppositely arranged serial numbers. Also, there are four second terminals **70** separately arranged and fixed to the plastic base **30**. The second terminal is integrally formed with a second contact **71**, a second extension **72**, a second fixing portion **73** and a second pin **74**. The second fixing portion **73** is fixed to the terminal slot **31** of the plastic base **30**. The second contact **71**, arranged on the second surface **502** of the tongue **50**, projects beyond the bottom of the tongue **50** and is elastically moved in correspondence with the through slot **51**. The second pin **74** extends out of the plastic base **30**. The first contact **61** of the first terminal **60** and the second contact **71** of the second terminal **70** corresponding to the same through slot **51** are aligned with each other in a front to rear direction.

The one row of second terminals **70** and the one row of first terminals **60** have oppositely arranged serial numbers. As shown in FIG. **4**A, the second terminals **70** on the bottom of the tongue have the serial numbers of 1, 2, 3, 4 from left to right, while the first terminals **60** on the top of the tongue have the serial numbers of 4, 3, 2, 1 from left to right. Thus, the same signal sorting may be obtained when the USB 2.0 plug is normally and oppositely electrically connected thereto.

The one row of first terminals **60** and the one row of second terminals **70** are formed by pressing the same metal sheet. So, the first fixing portion **63** and the second fixing portion **73** are located on the same level so that the two rows may be assembled with and fixed to the terminal slots **31** of the plastic base **30** at a time. In addition, the first pin **64** and the second pin **74** are aligned in one row.

According to the above-mentioned structure, FIGS. **4** and **4**A show the usage states of the USB 2.0 plug of a signal line. FIG. **4**A is a front view showing the socket of the invention and the plug **10** in a normal state. The USB 2.0 plug **10** has a plastic base **12** and a metal housing **13** covering the plastic base **12**. A chamber **14** is formed between the metal housing **13** and the plastic base **12**. One surface of the plastic base **12** is formed with one row of connection terminals **11**. In a front view, the one row of connection terminals **11** have the serial numbers of 4, 3, 2, 1 from left to right. When the connection terminals **11** of the USB 2.0 plug **10** face the second surface **502** of the tongue **50** and are normally inserted into the connection slot **45**, its chamber **14** is fitted with the tongue **50**, and its one row of connection terminals **11** are turned into the serial numbers of 1, 2, 3, 4 from left to right, and are electrically connected to the second contact **71** of the one row of second terminals **70** on the bottom of the tongue **50** (the serial numbers are 1, 2, 3, 4 from left to right). As shown in FIGS. **5** and **5**A, when the connection terminals **11** of the USB 2.0 plug **10** face the first surface **501** of the tongue **50** and are oppositely inserted into the connection slot **45**, its chamber **14** is also fitted with the tongue **50**, and its one row of connection terminals **11** are turned into the serial numbers of 4, 3, 2, 1 from left to right and are electrically connected to the first contacts **61** of the one row of first terminals **60** on the top of the tongue **50** (the serial numbers are 4, 3, 2, 1 from left to right). Because the tongue **50** is horizontally disposed at the middle of the connection slot **45**, the profile of the connection slot **45** above the tongue **50** is symmetrical with the profile thereof below the tongue, and the profiles of the connection slot **45** on the left and right sides of the tongue are symmetrical with each other. Thus, the USB 2.0 plug **10** may be normally and oppositely inserted and positioned into the connection slot **45**.

According to the above-mentioned description, it is obtained that the invention may be electrically connected to the USB 2.0 plug, which is normally and oppositely inserted, so that the convenience in use may be obtained.

As shown in FIG. **6**, the second embodiment of the invention is almost the same as the first embodiment except that the plastic base **30** of this embodiment has two rows of terminal slots **31**, and the one row of first terminals **60** and the one row of second terminals **70** are formed by respectively pressing two metal sheets. So, the first fixing portion **63** is engaged with the upper terminal slot **31** of the plastic base **30**, and the second fixing portion **73** is engaged with the lower terminal slot **31** of the plastic base **30**.

As shown in FIG. **7**, the third embodiment of the invention is almost the same as the second embodiment except that the first pins **64** of the one row of first terminals **60** and the first pins **74** of the one row of second terminals **70** of this embodiment are staggered and respectively arranged in two rows.

As shown in FIGS. **8** and **9**, the fourth embodiment of the invention is almost the same as the first embodiment except that the first contact **61** of the first terminal **60** and the second

contact **71** of the second terminal **70** of this embodiment are parallel to each other in a left to right direction.

As shown in FIGS. **10** to **12**, the fifth embodiment of the invention is almost the same as the first embodiment except that the tongue **50** of this embodiment needs not to be formed with the through slot. The first contact **61** of the first terminal **60** is formed by prodding the plate surface of the first extension **62** and projects beyond the plate surface. The one end of the first contact **61** is connected to the first extension **62** and gradually protrudes to the other end from front to rear and is opened. The plate surface of the first extension **62** has an opening **620**. When the first contact **61** is pressed and flattened, the first contact **61** may lie on the opening **620**. The one row of second terminals **70** and the one row of first terminals **60** have the same structure, pertain to the same connection interface and have oppositely arranged serial numbers. The second contact **71** of the second terminal **70** is formed by prodding the plate surface of the second extension **72** and projects beyond the plate surface. The one end of the second contact **71** is connected to the second extension **72**, and gradually protrudes to the other end from front to rear and is opened. The first contact **61** and the second contact **71** are vertically aligned with each other.

As shown in FIGS. **13** to **15**, the sixth embodiment of the invention is a USB 3.0 socket, which is substantially the same as the third embodiment except that this embodiment further has one row of first contacts **53** disposed in front of the first contacts **61**, and one row of second contacts **57** disposed in front of the second contact **71** in addition to one row of first contacts **61** and one row of second contacts **71**. That is, the tongue **50** is a circuit board assembled and positioned in the plastic base **30**. Five first traces **52** are disposed on the top surface of the tongue **50**, and have first contacts **53** separately arranged on the front section of the tongue and first connection terminals **54** disposed on the rear section of the tongue. The row of first connection terminals **54** are electrically connected to an additional row of first pins **80**. Five second traces **56** are disposed on a bottom surface of the tongue **50**, and have second contacts **57** separately arranged on the front section of the tongue and second connection terminals **58** disposed on the rear section of the tongue. The row of second connection terminals **58** are electrically connected to an additional row of second pins **85**.

The one row of first contacts **53** and the one row of second contacts **57** pertain to the same connection interface and have oppositely arranged serial numbers.

The one row of first pins **80** are bonded to the one row of first connection terminals **54**. The one row of second pins **85** are bonded to the one row of second connection terminals **58**. In addition, the first fixing portion **63** of the one row of first terminals **60** is bonded and fixed to the top surface of the tongue **50**. First fixing portions **73** of the one row of second terminals **70** are bonded and fixed to the bottom surface of the tongue **50**. The one row of first pins **80** and the first pins **64** of the one row of first terminals **60** are arranged in a row. The one row of second pins **85** and the second pins **74** of the one row of second terminals **70** are arranged in a row.

According to the above-mentioned structure, as shown in FIG. **16**, when the USB 3.0 plug **15** is normally inserted, its one row of connection terminals **16** are electrically connected to the second contacts **71** of the second terminals **70**. The other row of connection terminals **17** are electrically connected to the second contacts **57** of the second traces. As shown in FIG. **17**, when the USB 3.0 plug **15** is oppositely inserted, its one row of connection terminals **16** are electrically connected to the first contacts **61** of the first terminals **60**, and the other one row of connection terminals **17** are electrically connected to the first contacts **53** of the first traces.

FIG. **18** is a pictorial view showing a light and handy mobile disk **20**. One end of the disk **20** has a plug **21**, which is a USB 2.0 plug without a metal housing. One surface of the plug **21** has four connection terminals **22**, which are separately arranged and cannot be elastically moved.

FIG. **19** shows the usage state of the light and handy mobile disk **20**. When the plug **21** is connected to the top of the tongue **50**, the one row of connection terminals **22** are electrically connected to the first contacts **61** of the one row of first terminals **60** on the top of the tongue. When the plug **21** is connected to the bottom of the tongue **50**, the one row of connection terminals **22** are electrically connected to the second contacts **71** of the one row of second terminals **70** on the bottom of the tongue. According to the above-mentioned description, it is obtained that the socket structure of the invention, when being connected to the light and handy mobile disk, may serve as a dual-slot so that two light and handy mobile disks may be simultaneously connected thereto.

FIG. **20** is a side view showing another light and handy mobile disk **25**. One end of the disk **25** has a plug **28**, which is a USB 3.0 plug without a metal housing. The plug **28** is substantially the same as the plug **20**. One surface of the plug **28** is formed with one row of four connection terminals **26**, which are separately arranged and cannot be elastically moved, and further formed with one row of five connection terminals **27**, which are separately arranged and may be moved elastically.

FIG. **21** shows the usage state of the light and handy mobile disk **25**. When the plug **28** is electrically connected to the top surface of the tongue **50**, the one row of connection terminals **26** are electrically connected to the first contacts **61** of the one row of first terminals **60** on the top of the tongue. The one row of connection terminals **27** are electrically connected to the first contacts **53** of one row of first traces on the top surface of the tongue. When the plug **28** is electrically connected to the bottom of the tongue **50**, the one row of connection terminals **26** are electrically connected to the first contacts **71** of the one row of second terminals **70** on the bottom of the tongue. The one row of connection terminals **27** are electrically connected to the second contacts **57** of one row of second traces on the bottom surface of the tongue, so that two light and handy mobile disks **25** may be simultaneously connected to the top and bottom sides of the tongue **50**.

As shown in FIG. **22**, the seventh embodiment of the invention is almost the same as the sixth embodiment except that the one row of first pins **80** are not aligned with the first pins **64** of the one row of first terminals **60** in this embodiment, and the one row of second pins **85** are not aligned with the second pins **74** of the one row of second terminals **70**.

As shown in FIG. **23**, the eighth embodiment of the invention is almost the same as the first embodiment except that this embodiment pertains to a multilayer USB 2.0 socket, and the plastic base **30** has two connection slots **35** stacked together.

As shown in FIGS. **24** to **27**, the ninth embodiment of the invention is almost the same as the fifth embodiment, and its tongue **50** is also disposed at the middle of the connection slot **45**, so that the chamber above the tongue **50** of the connection slot **45** is the same as the chamber below the tongue **50**, and the chambers on the left and right sides of the tongue are the same. The difference between the ninth and fifth embodiments is that the one row of first terminals **60** on the top surface of the tongue **50** and the one row of second terminals **70** on the bottom surface of the tongue **50** pertain to different

connection interfaces in this embodiment. The one row of four second terminals **70** are separately arranged on the bottom surface of the tongue **50**. The second terminals **70** of the ninth and fifth embodiments have the same structure. The second terminal **70** is also integrally formed with a second contact **71**, a second extension **72**, a second fixing portion **73** and a second pin **74**. The one row of nine first terminals **60** are separately arranged on the top surface of the tongue **50**. The structure of the first terminal **60** is almost the same as that of the second terminal **70**, and is also integrally formed with a first contact **61**, a first extension **62**, a first fixing portion **63** and a first pin **64**.

FIG. **28** shows the usage state of the USB 2.0 plug **10** of the signal line. When the connection terminal **11** of the USB 2.0 plug **10** is inserted upwardly into the connection slot **45**, its chamber **14** is fitted with the tongue **50**, and its one row of connection terminals **11** are electrically connected to the second contacts **71** of the second terminals **70** on the bottom of the tongue **50**. FIG. **29** shows the usage state of the plug **18** having the shape the same as that of the USB 2.0 plug but a connection interface different from that of the USB 2.0 plug. The plug **18** has one row of nine connection terminals **19**. When the connection terminal **19** of the plug **18** is inserted downwardly into the connection slot **45**, its one row of connection terminals **19** are electrically connected to the first contacts **61** of the first terminals **60** on the top of the tongue **50**.

According to the above-mentioned description, it is obtained that the socket structure of this embodiment may be electrically connected to two plugs having metal housings and the same shape but different connection interfaces so that the usage thereof may be diversified.

Of course, the socket structure of this embodiment may also be connected to two light and handy mobile disks or storage cards having two different connection interfaces but having no metal housing.

As shown in FIGS. **30** to **32**, the tenth embodiment of the invention is a USB 3.0 socket, which is almost the same as the fifth embodiment except for the difference to be described in the following. This embodiment also has one row of first terminals **60** and one row of second terminals **70**, which have the same connection interface and have oppositely arranged serial numbers. This embodiment further has one row of first terminals **65** and one row of second terminals **90**, which have the same connection interface and have oppositely arranged serial numbers.

The first terminal **65** has a first contact **66**, a first extension **67**, a first fixing portion **68** and a first pin **69**. The one row of five first terminals **65** are disposed on the top surface of the tongue **50** and are arranged between the one row of first terminals **60**. The first contacts **66** of the first terminals **65**, which cannot be elastically moved, lie on the top surface of the tongue. The first contact **66** of the first terminal **65** is disposed in front of the first contact **61** of the first terminal **60**.

The second terminal **90** has a second contact **91**, a second extension **92**, a second fixing portion **93** and a second pin **94**. The one row of five second terminals **90** are disposed on the bottom surface of the tongue **50** and arranged between the one row of second terminals **70**. The second contact **91** of the second terminal **90** cannot be elastically moved and lies on the top surface of the tongue. The second contact **91** of the second terminal **90** is disposed in front of the second contact **71** of the second terminal **70**.

The two rows of first terminals **60** and **65** are formed by pressing the same metal sheet. The two rows of second terminals **70** and **90** are formed by pressing the same metal sheet.

As shown in FIGS. **33** and **34**, the eleventh embodiment of the invention is a mini USB 2.0 socket, which may allow a plug to be normally and oppositely inserted for connection. Compare with the connection interface of USB 2.0, the connection interface of the mini USB 2.0 has an additional terminal. So, the structure of this embodiment is substantially the same as the first embodiment, and similarly has a plastic base **30**, a metal housing **40**, a tongue **50**, one row of first terminals **60** and one row of second terminals **70**. The difference therebetween is that there are one row of five first terminals **60** in this embodiment, and the first terminal **60** has a first contact **61** projecting beyond the top surface of the tongue **50**. There are also one row of five second terminals **70**. Each second terminal has a second contact **71** projecting beyond the bottom surface of the tongue **50**. The one row of second terminals **70** and the one row of first terminals **60** pertain to the same connection interface and have oppositely arranged serial numbers. The structures of the second terminal **70** and the first terminal **60** are also substantially the same as those of the first embodiment.

As shown in FIGS. **35** to **37**, the twelfth embodiment of the invention is a USB 2.0 socket, which allows a plug to be normally and oppositely inserted for connection and is almost the same as the first embodiment. The socket similarly has a plastic base **30**, a metal housing **40**, a tongue **50**, one row of first terminals **60** and one row of second terminals **70**. The differences between the twelfth and first embodiments are described in the following.

Two sides of the metal housing **40** are prodded inwardly to form four laterally elastically movable elastic sheets, which include two outer elastic sheets **41** and two inner elastic sheets **42** respectively disposed above and below the tongue **50**. The two inner elastic sheets **42** are disposed on inner sides of the two outer elastic sheets **41**. The two inner elastic sheets **42** respectively rest against the top and bottom surfaces on one side of the tongue **50**. Each elastic sheet has one end connected to a portion near the front end on the two sides of the metal housing **40** and extends inwardly in an arced manner. Each elastic sheet has a projection **46**. When the projection **46** is pressed, the elastic sheet is elastically moved outwardly.

The front end of the first contact **61** of the first terminal **60** has a first guide-in sheet **611**. The plate surface of the first guide-in sheet **611** is smaller than the plate surface of the first contact **61**. The front end of the second contact **71** of the second terminal **70** has a second guide-in sheet **75**. The plate surface of the second guide-in sheet **75** is smaller than the plate surface of the second contact **71**. The first contact **61** and the second contact **71** are vertically aligned, and the first guide-in sheet **611** and the second guide-in sheet **75** are staggered in a left to right direction. Both the first guide-in sheet **611** and the second guide-in sheet **75** are hooked on the tongue **50**.

As shown in FIG. **39**, when the connection terminal **22** of the light and handy mobile disk **20** is inserted downwardly into the space above the tongue **50**, two elastic sheets on two sides of the top of the tongue **50** are pushed away and elastically moved outwardly, and the inner elastic sheets **42** on two sides of the bottom of the tongue rest against the bottom surface of the tongue **50**. So, when the light and handy mobile disk **20** is improperly inserted to turn downwards, the inner elastic sheets **42** resting against the bottom surface of the tongue **50** can prevent the tongue **50** from being forced downwards and thus broken.

When the first contact **61** of the first terminal **60** is in elastic contact with the connection terminal **22** of the light and handy mobile disk **20** and is elastically moved downwards, the first guide-in sheet **611** cannot touch the second guide-in sheet **75**

because the first guide-in sheet **611** and the second guide-in sheet **75** are staggered in a left to right direction.

As shown in FIG. **38**, when the connection terminal **22** of the light and handy mobile disk **20** is inserted upwards into the space below the tongue **50**, two elastic sheets on two sides of the tongue **50** are pushed away and elastically moved outwards. Because the inner elastic sheets **42** on two sides of the top of the tongue rest against the top surface of the tongue **50**, the tongue **50** is also protected and cannot be broken when the light and handy mobile disk **20** is improperly inserted.

As shown in FIG. **40**, when the connection terminal of the USB 2.0 plug **10** having the metal housing is inserted upwardly into the connection slot, the USB 2.0 plug **10** occupies the entire chamber below the tongue **50** but does not occupy the entire chamber above the tongue. At this time, the outer elastic sheets **41** on two sides of the top of the tongue rest against the USB 2.0 plug **10** to prevent the USB 2.0 plug **10** from being rotated upwards and thus provide the effect of protecting the tongue **50**.

As shown in FIG. **41**, when the connection terminal of the USB 2.0 plug **10** is inserted downwardly into the connection slot, the USB 2.0 plug **10** occupies the entire chamber above the tongue **50** but does not occupy the entire chamber below the tongue. At this time, the outer elastic sheets **41** on two sides of the bottom of the tongue rest against the USB 2.0 plug **10** to prevent the USB 2.0 plug **10** from being rotated upwards to achieve the effect of protecting the tongue **50**.

The design of this embodiment has the effect of bidirectional insertion, and further has the effects of protecting the tongue and enlarging the contact area of the terminal.

As shown in FIG. **42**, the thirteenth embodiment of the invention is almost the same as the twelfth embodiment except that one of two laterally elastically movable outer elastic sheets **41** is formed on each of two sides of the metal housing **40** above and below the tongue **50** by prodding the metal housing **40** inwardly.

As shown in FIG. **43**, when the connection terminal of the USB 2.0 plug **10** is inserted upwardly into the connection slot, the outer elastic sheets **41** on two sides of the top of the tongue rest against the USB 2.0 plug **10**. As shown in FIG. **44**, when the connection terminal of the USB 2.0 plug **10** is inserted downwardly into the connection slot, the outer elastic sheets **41** on two sides of the bottom of the tongue rest against the USB 2.0 plug **10**.

As shown in FIG. **45**, the fourteenth embodiment of the invention is almost the same as the twelfth embodiment except that each of two sides of the metal housing **40** is prodded inwardly to form a laterally elastically movable middle elastic sheet **43**. The middle elastic sheet **43** is disposed at a middle height on one side of the connection slot **45** and has the structure the same as that of the outer elastic sheet **41**.

As shown in FIG. **46**, when the connection terminal of the light and handy mobile disk **20** is inserted upwardly into the connection slot **45**, the middle elastic sheets **43** on two sides of the tongue rest against one surface **23** of the light and handy mobile disk **20** formed with the connection terminal to prevent the light and handy mobile disk **20** from being rotated upwards. As shown in FIG. **47**, when the connection terminal of the light and handy mobile disk **20** is inserted downwardly into the connection slot, the middle elastic sheets **43** on two sides of the tongue rest against one surface of the light and handy mobile disk **20** formed with the connection terminal to prevent the light and handy mobile disk **20** from being rotated downwards.

As shown in FIG. **48**, the fifteenth embodiment of this invention is almost the same as the thirteenth and fourteenth embodiments. That is, each of two sides of the metal housing **40** is prodded inwardly to form a middle elastic sheet **43** and two outer elastic sheets **41**, which are laterally elastically movable.

As shown in FIG. **49**, the sixteenth embodiment of the invention is almost the same as the twelfth embodiment except that one end of the outer elastic sheet **41** and one end of the inner elastic sheet **42** are connected to two side plate surfaces of the metal housing **40** and extend outwardly in an arced manner. Each elastic sheet has a projection **46**. When the projection **46** is pressed, the elastic sheet is elastically moved outwardly.

As shown in FIG. **50**, the seventeenth embodiment of the invention is almost the same as the thirteenth embodiment except that the one end of the outer elastic sheet **41** of this embodiment is connected to the middle plate surface on each of two sides of the metal housing **40** and extends outwardly in an arced manner.

As shown in FIG. **51**, the eighteenth embodiment of the invention is almost the same as the fourteenth embodiment except that one end of the middle elastic sheet **43** of this embodiment is connected to the middle plate surface on each of two sides of the metal housing **40** and extends outwardly in an arced manner.

As shown in FIGS. **52** and **53**, the nineteenth embodiment of the invention is a USB 3.0 socket, which allows the plug to be inserted normally and oppositely, and is almost the same as the twelfth embodiment except that this embodiment additionally has one row of first terminals **65** and one row of second terminals **90**. The contact **66** of the first terminal **65** lies on the top surface of the tongue **50** and is disposed in front of the contact **61** of the first terminal **60** on the same surface. The contact **91** of the second terminal **90** lies on the bottom surface of the tongue **50** and is disposed in front of the contact of the second terminal **70** on the same surface.

As shown in FIG. **54**, the 20th embodiment of the invention is almost the same as the twelfth embodiment except that the embodiment is a four-layer USB 2.0 socket that allows the USB plug to be normally and oppositely inserted for connection. That is, the plastic base **30** has four connection slots **35**, and the metal housing **40** has four openings corresponding to the four connection slots **35**.

As shown in FIG. **55**, the 21st embodiment of the invention is almost the same as the nineteenth embodiment except that this embodiment is a two-layer USB 3.0 socket that allows the plug to be normally and oppositely inserted. That is, the plastic base **30** has two connection slots **35**, and the metal housing **40** has two openings corresponding to the four connection slots **35**.

As shown in FIG. **56**, the 22nd embodiment of the invention is almost the same as the 20th embodiment except that this embodiment is a three-layer stacked socket. That is, the plastic base has, from bottom to top, a connection slot **35**, a connection slot **36** and a connection slot **37**. The metal housing **40** has three openings corresponding to the three connection slots, wherein the lowest slot is the connection slot **35** of the USB 3.0 socket that allows the plug to be normally and oppositely inserted, the middle slot is the connection slot **36** of the socket shared by the USB 3.0 and eSATA (External Serial ATA) plugs, and the upper slot is the connection slot **37** of the USB 2.0 socket that allows the plug to be inserted unidirectionally.

As shown in FIG. **57**, the 23rd embodiment of the invention is almost the same as the 21st embodiment except that this embodiment is a three-layer stacked socket. That is, the plastic base has, from bottom to top, a connection slot **35**, a connection slot **37** and a connection slot **38**. The metal hous-

ing **40** has three openings corresponding to the three connection slots, wherein the lowest connection slot **35** allows the USB 3.0 plug to be normally and oppositely inserted for connection, the middle connection slot **37** allows the USB 2.0 plug to be unidirectionally inserted for connection, and the upper connection slot **38** allows the 1394 plug to be inserted.

As shown in FIG. **58**, the 24th embodiment of the invention is a dual-slot USB 2.0 socket for bidirectional insertion and connection and is almost the same as the eighth embodiment except that the two connection slots **35** of this embodiment are arranged from left to right and have the insertion ports facing frontward, and the tongues **50** in the connection slots **35** are in the upright state.

As shown in FIG. **59**, the 25th embodiment of the invention is a dual-slot USB 3.0 socket for bidirectional insertion and connection and is almost the same as the 24th embodiment. The two connection slots **35** are also arranged from left to right, and the tongues **50** in the connection slots **35** are in the upright state.

As shown in FIG. **60**, the 26th embodiment of the invention includes three sockets arranged from left to right and is almost the same as the 25th embodiment except that the leftmost connection slot **35** corresponds to the USB 2.0 socket for bidirectional insertion and connection, the middle connection slot **35** corresponds to the USB 3.0 socket for bidirectional insertion and connection, and the rightmost connection slot **38** corresponds to the 1394 socket.

As shown in FIG. **61**, the 27th embodiment of the invention has three sockets arranged from left to right and is almost the same as the 26th embodiment except that the rightmost connection slot **36** is shared by the USB 3.0 and eSATA plugs.

As shown in FIG. **62**, the 28th embodiment of the invention is a dual-slot USB 2.0 socket for bidirectional insertion and connection, and is almost the same as the 24th embodiment except that this embodiment has upright slots **35**, and the insert ports of the connection slots **35** face upwards.

As shown in FIG. **63**, the 29th embodiment of the invention is almost the same as the 28th embodiment except that this embodiment is a dual-slot USB 3.0 socket for bidirectional insertion and connection.

As shown in FIG. **64**, the 30th embodiment of the invention is almost the same as the 29th embodiment except that this embodiment contains three upright slots. The leftmost connection slot **35** corresponds to the USB 3.0 socket for bidirectional insertion and connection, the middle connection slot **36** corresponds to the socket shared by the USB 3.0 and eSATA plugs, and the rightmost connection slot **38** corresponds to the 1394 socket.

As shown in FIG. **65**, the 31st embodiment of the invention is almost the same as the 30th embodiment except that the rightmost connection slot **39** of this embodiment is shared by the HDMI (High Definition Multimedia Interface) and display ports.

As shown in FIGS. **66** to **68**, the 32nd embodiment of the invention is a micro USB 2.0 socket, which includes a plastic base **30**, a metal housing **40**, one row of first terminals **60** and one row of second terminals **70**.

The plastic base **30** has two rows of terminal slots **31**. The front end of the terminal slot **31** is integrally formed with a projecting tongue **50**, and each of the top and bottom surfaces of the tongue **50** is formed with five terminal slots **59** separately arranged.

The metal housing **40** covers the plastic base **30**, the front section of the metal housing **40** is formed with a connection slot **45**, and the connection slot **45** is disposed on the front end of the plastic base **30** and covers the tongue **50** therein. The top and bottom ends are narrower than the middle section so that the four corners of its profile are formed with symmetric sloped edges **48**, and the top, bottom, left and right sides of the tongue **50** are formed with compatible and symmetrical profiles. Thus, a micro USB 2.0 plug may be bidirectionally inserted for connection. In addition, each of the top and bottom plates of the metal housing **40** is prodded to form two elastic locks **413**, and each of four sloped edges **48** of the front end of the connection slot **45** is formed with a slant guiding plate **47** expanding outwards. When the micro USB plug is inserted into the connection slot and touches the slant guiding plate **47**, it is guided toward the center of the connection slot.

The one row of first terminals **60** have five first terminals. Each first terminal **60** has a first contact **61**, a first fixing portion **63** and a first pin **64**. The first fixing portions **63** are fixed to the upper row of terminal slots **31** of the plastic base **30**. The first contact **61** cannot be elastically moved but lies in the terminal slot **59** on the top surface of the tongue **50**. The first pin **64** extends out of the bottom of the plastic base **30**.

The one row of second terminals **70** have five terminals. Each second terminal **70** has a second contact **71**, a second fixing portion **73** and a second pin **74**. The second fixing portions **73** are fixed to the lower row of terminal slots **31** of the plastic base **30**. The second contact **71** cannot be elastically moved and lies in the terminal slot **59** on the bottom of the tongue **50**. The second pin **74** extends out of the plastic base **30** to the bottom thereof. The at least one row of first contacts **61** and the at least one row of second contacts **71** pertain to the same connection interface and have oppositely arranged serial numbers. That is, the one row of second contacts **71** have the serial numbers of 1, 2, 3, 4 and 5 from left to right, and the one row of first contacts **61** have the serial numbers of 5, 4, 3, 2 and 1 from left to right.

According to the above-mentioned structure, as shown in FIG. **69**, the micro USB 2.0 plug **110** has a plastic base **114** and a metal casing covering the plastic base **114**. The plastic base **114** has a connection slot **111** and one row of five connection terminals **112**, and two elastic locks **113** on the top end surface. When the connection terminals **112** of the micro USB 2.0 plug **110** are upwardly and normally inserted into the connection slot **45**, the connection slot **111** of the micro USB 2.0 plug is fitted with the tongue **50**, and its one row of connection terminals **112** are electrically connected to the one row of second contacts **71** on the bottom side of the tongue **50**. The two elastic projecting hooks **113** may hook on the rear sides of the elastic locks **413** of the top plate of the metal housing **40**. As shown in FIG. **70**, when the connection terminal **112** of the micro USB 2.0 plug **110** is downwardly and oppositely inserted into the connection slot **45**, the one row of connection terminals **112** are electrically connected to the one row of first contacts **61** on the top surface of the tongue **50**, and the two elastic locks **113** may engage with the rear sides of the two elastic locks **413** of the bottom plate of the metal housing **40**. According to the above-mentioned description, it is obtained that the embodiment can allow the micro USB 2.0 plug **110** to be normally and oppositely inserted for electrical connection.

As shown in FIG. **71**, when the micro USB 2.0 plug **110** is inserted into the connection slot **45** but is biased upward and not aligned with the slot, the micro USB 2.0 plug **110** touches the slant guiding plates **47** of two corners on the top of the connection slot **45**. The micro USB 2.0 plug **110** is guided, by the slant surface of the slant guiding plate **47**, to the center of the connection slot **45** so that the plug may be inserted in an aligned manner and the convenience in use may be obtained.

As shown in FIGS. **72** and **73**, the 33rd embodiment of the invention is a mini USB 2.0 socket for bidirectional insertion and connection. The structure of this embodiment is almost

the same as the structure of the eleventh embodiment and includes a plastic base **30**, a metal housing **40**, a tongue **50**, one row of first terminals **60** and one row of second terminals **70**. The difference therebetween is that the front sections of the top and bottom plate surfaces of the metal housing **40** of this embodiment are formed with four projections **49** projecting toward the connection slot **45**. In addition, the structures of the one row of first terminals **60** and the one row of second terminals **70** are the same as the structures of the twelfth embodiment of FIG. **35**. That is, the front end of the contact **61** of the first terminal **60** is formed with a downward guide-in sheet **611**. The plate surface of the guide-in sheet **611** is smaller than the contact **61**. The front end of the second contact **71** of the second terminal **70** is formed with an upward guide-in sheet **75**. The plate surface of the guide-in sheet **75** is smaller than the contact **71**. The guide-in sheets **611** and the guide-in sheets **75** are staggered in a left to right direction.

As shown in FIG. **74**, when the mini USB 2.0 plug **120** is normally inserted into the socket, four projections **49** on the top plate of the metal housing **40** push the mini USB 2.0 plug **120** downwards to prevent the metal casing **121** of the mini USB 2.0 plug **120** from touching the second terminal **70** to cause the short-circuited condition.

As shown in FIG. **75**, when the mini USB 2.0 plug **120** is oppositely inserted into the socket, the four projections **49** on the bottom plate of the metal housing **40** push the mini USB 2.0 plug **120** upwards to prevent the metal casing **121** of the mini USB 2.0 plug **120** from touching the first terminal **60** to cause the short-circuited condition.

As shown in FIG. **76**, the 34th embodiment of the invention is a micro USB socket for the bidirectional insertion and connection of the micro USB 2.0 plug and the unidirectional insertion and connection of the micro USB 3.0 plug. The structure of this embodiment is almost the same as the 32nd embodiment except that the plastic base **30** and the metal housing **40** of this embodiment are wider than those of the 32nd embodiment. The front section of the metal housing **40** is also formed with the wider connection slot **45**. The socket of this embodiment further has a second tongue **510** and one row of five third terminals **100**. The second tongue **510** integrally projects beyond the front end of the plastic base **30**. The second tongue **510** and the tongue **50** are located on the same level and in parallel. However, the chambers above and below the second tongue **510** are not compatible with each other. The lower chamber is larger than the upper chamber. The chambers on the left and right sides of the connection slot **45** are not compatible. The one row of third terminals **100** are fixed to the plastic base **30**. The third terminals **100** have third contacts **101** separately arranged on the bottom surface of the second tongue **510**, and have pins extending out of the plastic base.

As shown in FIG. **77**, when the micro USB 2.0 plug **110** is oppositely inserted into the connection slot **45**, the connection terminal **112** of the micro USB 2.0 plug **110** is electrically connected to the first contact portion **61** on the top of the tongue **50**.

As shown in FIG. **78**, when the micro USB 2.0 plug **110** is normally inserted into the connection slot **45**, the connection terminal **112** of the micro USB 2.0 plug **110** is electrically connected to the second contact portion **71** on the bottom of the tongue **50**.

FIG. **80** is a cross-sectional view showing a micro USB 3.0 plug **115**, which is almost the same as the micro USB 2.0 plug, and includes one row of five elastically movable connection terminals **117** on the left side, and one row of five elastically movable connection terminals **118** on the right side.

As shown in FIG. **79**, when the micro USB 3.0 plug **115** is normally inserted into the connection slot **45**, the one row of connection terminals **117** of the micro USB 3.0 plug **115** are electrically connected to one row of second contact portions **71** on the bottom of tongue **50**, and the other row of connection terminals **118** of the micro USB 3.0 plug **115** are electrically connected to one row of third contact portions **101** on the bottom of the tongue **510**.

As shown in FIG. **81**, the 35th embodiment of the invention is a micro USB 3.0 socket for bidirectional insertion and connection of the micro USB 3.0 plug. The structure of this embodiment is almost the same as that of the 34th embodiment except that the chambers above and below the second tongue **510** are compatible and symmetrical, and the chambers on the left and right sides of the connection slot **45** are also compatible and symmetrical. The structure of this embodiment further has one row of five fourth terminals **105** fixed to the plastic base **30**. The fourth terminals **105** have fourth contacts **106** separately arranged on the top surface of the second tongue **510** and have pins extending out of the plastic base. The one row of first contacts **61** and the at least one row of third contacts **101** pertain to the same connection interface and have oppositely arranged serial numbers. As shown in FIG. **81**, the one row of first contacts **61** have the serial numbers of 10, 9, 8, 7 and 6 from left to right, and the one row of third contacts **101** have the serial numbers of 6, 7, 8, 9 and 10 from left to right. The one row of second contacts **71** and the one row of fourth contacts **106** pertain to the same connection interface and have oppositely arranged serial numbers. The one row of second contacts **71** have the serial numbers of 1, 2, 3, 4 and 5 from left to right, and the one row of fourth contacts **106** have the serial numbers of 5, 4, 3, 2 and 1 from left to right.

In addition, each of the top and bottom plates of the metal housing **40** is prodded to form with elastic pressing sheet **410** symmetrically arranged on the left and right sides. A positioning projection **412** and a guide-in slant sheet **411** are formed near two lateral sides. The elastic pressing sheet **410** extends inwards. Two sides of the two positioning projections **412** are separated from the metal housing **40**, and the front and rear ends of the two positioning projections **412** are connected to the metal housing **40**. When the micro USB 3.0 plug **115** is normally inserted into the connection slot **45**, the two guide-in slant sheets **411** may assist in guiding the plug.

As shown in FIG. **82**, when the micro USB 3.0 plug **115** is normally inserted into the connection slot **45**, the one row of connection terminals **117** of the micro USB 3.0 plug **115** are electrically connected to one row of second contact portions **71** on the bottom of the tongue **50**. The other row of connection terminals **118** of the micro USB 3.0 plug **115** are electrically connected to one row of third contact portions **101** on the bottom of the tongue **510**. The ten connection terminals are correspondingly electrically connected to the contact portions, wherein the connection terminal and the contact portion connected together have the same serial number. At this time, the elastic pressing sheet **410** and the positioning projection **412** of the top plate of the metal housing **40** may rest against the micro USB 3.0 plug **115** to form the better positioning effect. The positioning projection **412** of the bottom plate of the metal housing **40** may be positioned on one side of the micro USB 3.0 plug **115**.

As shown in FIG. **83**, when the micro USB 3.0 plug **115** is oppositely inserted into the connection slot **45**, the one row of connection terminals **117** of the micro USB 3.0 plug **115** are electrically connected to one row of fourth contact portions **106** on the top of the tongue **510**. The other row of connection terminals **118** of the micro USB 3.0 plug **115** are electrically

connected to the one row of first contact portions **61** on the top of the tongue **50**. The ten connection terminals are correspondingly electrically connected to the contact portions, wherein the connection terminal and the contact portion connected together have the same serial number. At this time, the elastic pressing sheet **410** and the positioning projection **412** of the bottom plate of the metal housing **40** may rest against the micro USB 3.0 plug **115** to form the better positioning effect. The positioning projection **412** of the top plate of the metal housing **40** may be positioned on one side of the micro USB 3.0 plug **115**.

As shown in FIGS. **84** and **85**, the 36th embodiment of the invention is a micro USB 3.0 socket for bidirectional insertion and connection of the micro USB 3.0 plug. The structure of this embodiment is almost the same as the 35th embodiment except that this embodiment does not have the guide-in slant sheet, and only has the positioning projection **412**. The positioning projection **412** has two sides connected to the metal housing **40**, and front and rear ends separated from the metal housing **40**.

Two surfaces of the tongue of the invention are formed with contacts, so there are many terminals arranged densely, and the high-frequency requirement is highly needed. The factors affecting the high frequency include the electroconductivity of the terminal, the cross-sectional area of the terminal, and the length of the terminal. In order to achieve the proper high frequency, the cross-sectional area and the length of the terminal need to be changed and then the high-frequency test has to be performed to obtain the desired high-frequency value.

Taking the USB 3.0 socket for bidirectional insertion and connection as an example, as shown in FIGS. **86** and **87**, when the high-frequency test does not reach the standard, the plate widths or the plate thicknesses of the two rows of first terminals **60** and **65** and the two rows of second terminals **70** and **90** may be increased so as to increase the frequency. As shown in FIGS. **88** and **89**, when the high-frequency test exceeds the standard, the plate widths or the plate thicknesses of the two rows of first terminals **60** and **65** and the two rows of second terminals **70** and **90** may be decreased, or the terminals may be curved to increase the lengths so as to decrease the frequency.

While the invention has been described by way of examples and in terms of preferred embodiments, it is to be understood that the invention is not limited thereto. To the contrary, it is intended to cover various modifications. Therefore, the scope of the appended claims should be accorded the broadest interpretation so as to encompass all such modifications.

What is claimed is:

1. A socket structure with duplex electrical connection, the socket structure comprising:

a plastic base;

a connection slot, which is disposed in front of the plastic base and may be connected to a plug having at least one row of connection terminals;

a tongue, which has a first surface and a second surface disposed opposite the first surface, and is disposed on one end of the plastic base and within the connection slot, such that chambers of the connection slot on two sides of the tongue make the plug be normally and oppositely inserted and positioned into the connection slot;

at least one row of first contacts separately arranged on the first surface of the tongue, wherein each of the first contacts is electrically connected to a first pin extending out of the plastic base; and

at least one row of second contacts separately arranged on the second surface of the tongue, wherein:

each of the second contacts is electrically connected to a second pin extending out of the plastic base;

when the plug is normally inserted into the connection slot with the at least one row of connection terminals of the plug facing the second surface of the tongue, the at least one row of connection terminals of the plug are electrically connected to the at least one row of second contacts; and

when the plug is oppositely inserted into the connection slot with the at least one row of connection terminals of the plug facing the first surface of the tongue, the at least one row of connection terminals of the plug are electrically connected to the at least one row of first contacts.

2. The socket structure according to claim **1**, wherein the at least one row of first contacts and the first pins are formed on at least one row of first terminals; the first terminal is integrally formed with the first contact, a first extension, a first fixing portion and the first pin; the at least one row of second contacts and the second pins are formed on at least one row of second terminals; and the second terminal is integrally formed with the second contact, a second extension, a second fixing portion and the second pin.

3. The socket structure according to claim **2**, wherein the first contacts of the row of first terminals and the second contacts of the row of second terminals respectively project beyond one of the surfaces of the tongue.

4. The socket structure according to claim **1**, wherein the chambers of the connection slot on the two sides of the tongue are formed with compatible profiles, the at least one row of connection terminals are formed on only one of the surfaces of the plug, and the at least one row of connection terminals of the plug are electrically connected to only one of the rows of contacts on one of the surfaces of the tongue.

5. The socket structure according to claim **1**, further comprising a metal housing covering the plastic base, wherein the tongue and the plastic base are integrally formed.

6. The socket structure according to claim **3**, wherein the tongue is formed with through slots separately arranged, and the first contacts of the first terminals and the second contacts of the second terminals are elastically moved in correspondence with the through slots.

7. The socket structure according to claim **6**, wherein the first contact of the first terminal and the second contact of the second terminal corresponding to the same one of the through slots are aligned with each other in a front to rear direction.

8. The socket structure according to claim **6**, wherein the first contact of the first terminal and the second contact of the second terminal are parallel to each other in a left to right direction.

9. The socket structure according to claim **3**, wherein:

the first contact of the first terminal is prodded and projects beyond a plate surface of the first extension, and one end of the first contact is connected to the first extension and gradually protrudes to the other end from front to rear and is opened; and

the second contact of the second terminal is prodded and projects beyond a plate surface of the second extension, and one end of the second contact is connected to the second extension and gradually protrudes to the other end from front to rear and is opened.

10. The socket structure according to claim **9**, wherein the row of first terminals and the row of second terminals pertain to the same connection interface and have oppositely arranged serial numbers, and the first contact and the second contact are vertically aligned with each other.

11. The socket structure according to claim **1**, wherein:

the tongue is a circuit board, first traces are formed on a top side of the tongue, and the first trace has the first contact on a front section of the tongue and a first connection terminal on a rear section of the tongue, the first connection terminal is electrically connected to the first pin; and

second traces are formed on a bottom side of the tongue, the second trace has the second contact on the front section of the tongue and a second connection terminal on the rear section of the tongue, and the second connection terminal is electrically connected to the second pin.

12. The socket structure according to claim **1**, wherein the plug has a plastic base and a metal housing, the metal housing covers the plastic base, a chamber is formed between the metal housing and the plastic base, and the chamber is fitted with the tongue when the plug is inserted into the connection slot.

13. The socket structure according to claim **1**, wherein the plug does not have a metal housing, and when the plug is inserted into the connection slot, the plug may be connected to a top side or a bottom side of the tongue so that two plugs may be simultaneously connected to the top and bottom sides of the tongue.

14. The socket structure according to claim **1**, wherein the at least one row of first contacts and the at least one row of second contacts pertain to the same connection interface and have oppositely arranged serial numbers, and the plug may be normally and oppositely inserted for electrical connection with the connection terminals of the plug facing upward or downward.

15. The socket structure according to claim **14** being a universal serial bus (USB) socket, wherein there are four rows of the first contacts and four rows of the second contacts.

16. The socket structure according to claim **14** being a mini universal serial bus (USB) socket, wherein there are five rows of the first contacts and five rows of the second contacts.

17. The socket structure according to claim **1**, wherein the at least one row of first contacts and the at least one row of second contacts pertain to different connection interfaces, and may be respectively electrically connected to the plug and the other plug, which have the different connection interfaces.

18. The socket structure according to claim **1**, wherein the tongue is disposed at a middle within the connection slot so that the connection slot is formed with symmetric profiles in up, down, left and right chambers of the tongue.

19. The socket structure according to claim **5**, wherein at least one side of the metal housing projects inwardly to form at least one laterally elastically movable elastic sheet, and when the plug is inserted into the connection slot, the at least one elastic sheet may rest against the plug or the tongue to prevent the plug from turning.

20. The socket structure according to claim **19**, wherein the at least one elastic sheet is a middle elastic sheet disposed at a middle height on one side of the connection slot, the plug does not have a metal housing, the plug may be connected to a top side or a bottom side of the tongue when the plug is inserted into the connection slot, and the middle elastic sheet rests against one of the surfaces of the plug formed with the connection terminals.

21. The socket structure according to claim **19**, wherein the at least one elastic sheet comprises two outer elastic sheets, which are disposed above and below of the tongue on one side of the connection slot, the plug has a plastic base and a metal housing covering the plastic base, a chamber is formed between the metal housing and the plastic base, and when the plug is inserted into the connection slot, the chamber is fitted with the tongue, an elastic sheet on one side of the metal housing is pushed away by the plug, and the other elastic sheet rests against one of the surfaces of the plug.

22. The socket structure according to claim **21**, wherein the at least one elastic sheet further comprises two inner elastic sheets disposed on inner sides of the two outer elastic sheets, and the two inner elastic sheets respectively rest against top and bottom surfaces on one side of the tongue.

23. The socket structure according to claim **21**, wherein the at least one elastic sheet further comprises a middle elastic sheet disposed on an inner side of the two outer elastic sheets and disposed at a middle height on one side of the connection slot, and when the plug does not have the metal housing, the plug inserted into the connection slot may be connected to a top side or a bottom side of the tongue, and the middle elastic sheet rests against one of the surfaces of the plug formed with the connection terminals.

24. The socket structure according to claim **19**, wherein one end of the elastic sheet is connected to one side of the metal housing near a front end of the metal housing and extends inwardly in an arced manner, the elastic sheet has a projection, and the elastic sheet is elastically moved outwardly when the projection is pressed.

25. The socket structure according to claim **19**, wherein one end of the elastic sheet is connected to a side plate surface of the metal housing and extends outwardly in an arced manner, the elastic sheet has a projection, and the elastic sheet is elastically moved outwardly when the projection is pressed.

26. The socket structure according to claim **3**, wherein a front end of the first contact has a first guide-in sheet, a front end of the second contact has a second guide-in sheet, the first contact and the second contact are vertically aligned with each other, and the first guide-in sheet and second guide-in sheet are staggered in a left to right direction.

27. The socket structure according to claim **1**, wherein the plastic base is further formed with at least another connection slot, and the another connection slot has at least one row of terminals to be connected to another plug.

28. The socket structure according to claim **14**, wherein top and bottom ends of the connection slot are narrower than a middle section of the connection slot so that four corners of a profile of the connection slot have sloped edges.

29. The socket structure according to claim **28**, wherein each of the four sloped edges on the front end of the connection slot is formed with a slant guiding plate expanding outwardly, and when the plug is inserted into the connection slot to touch the slant guiding plate, the plug is guided toward a center of the connection slot.

30. The socket structure according to claim **28** being a micro USB 2.0 socket, wherein each of the at least one row of first contacts and the at least one row of second contacts is a row of five connection terminals, which cannot be elastically moved.

31. The socket structure according to claim **1**, further comprising:

a second tongue disposed within the connection slot, wherein the second tongue and the tongue are located on the same level and in parallel;

at least one row of third contacts separately arranged on one surface of the second tongue, wherein each of the third contacts is electrically connected to a pin extending out of the plastic base; and

at least one row of fourth contacts separately arranged on the other surface of the second tongue, wherein each of the fourth contacts is electrically connected to a pin extending out of the plastic base;

wherein the at least one row of first contacts and the at least one row of third contacts pertain to the same connection

interface and have oppositely arranged serial numbers, the at least one row of second contacts and the at least one row of fourth contacts pertain to the same connection interface and have oppositely arranged serial numbers.

32. The socket structure according to claim **31** being a micro USB 3.0 socket, wherein each of the at least one row of first contacts, the at least one row of second contacts, the at least one row of third contacts and the at least one row of fourth contacts has one row of five connection terminals, which cannot be elastically moved.

33. The socket structure according to claim **14**, further comprising:

a second tongue disposed within the connection slot, wherein the second tongue and the tongue are located on the same level and in parallel; and

at least one row of third contacts separately arranged on one surface of the second tongue, wherein each of the third contacts is electrically connected to a pin extending out of the plastic base.

* * * * *