US 20090258539A1

(19) United States

(12) Patent Application Publication

Zheng et al.

(10) Pub. No.: US 2009/0258539 A1

(43) Pub. Date: Oct. 15, 2009

(54) ELECTRICAL CONNECTOR WITH IMPROVED CONTACT ARRANGEMENT

(75) Inventors: **Qi-Sheng Zheng**, Kunshan (CN); **Jia-Yong He**, Kunshan (CN); **Hao Gu**, Kunshan (CN)

Correspondence Address:
WEI TE CHUNG
FOXCONN INTERNATIONAL, INC.
1650 MEMOREX DRIVE
SANTA CLARA, CA 95050 (US)

(73) Assignee: **HON HAI PRECISION IND. CO., LTD.**

(21) Appl. No.: **12/384,865**

(22) Filed: **Apr. 9, 2009**

(30) **Foreign Application Priority Data**

Apr. 9, 2008 (CN) 200820035067.9
Apr. 21, 2008 (CN) 200820034872.X

Publication Classification

(51) **Int. Cl.**
H01R 9/03 (2006.01)

(52) **U.S. Cl.** **439/607.41**

(57) **ABSTRACT**

An electrical connector (**100**) defining an inserting port (**10**) for connecting a corresponding plug, includes a first contact module and a second contact module fixed with each other. The first contact module includes a first housing (**1**) and a number of first contacts (**31**) insert molded in the first housing (**1**). The first housing (**1**) has a tongue (**12**) extending into the inserting port (**10**). Each first contact (**31**) has a first contact portion (**311**) extending to a free end of the tongue (**12**). The second contact module includes a second housing (**2**) and a number of second contacts (**32**) insert molded in the second housing (**2**). Each second contact (**32**) has a second contact portion (**321**) extending out of the second housing (**2**). The second contact portions (**321**) extend to the tongue and off-setting with the first contact portion (**311**) along a length direction of the tongue (**12**).

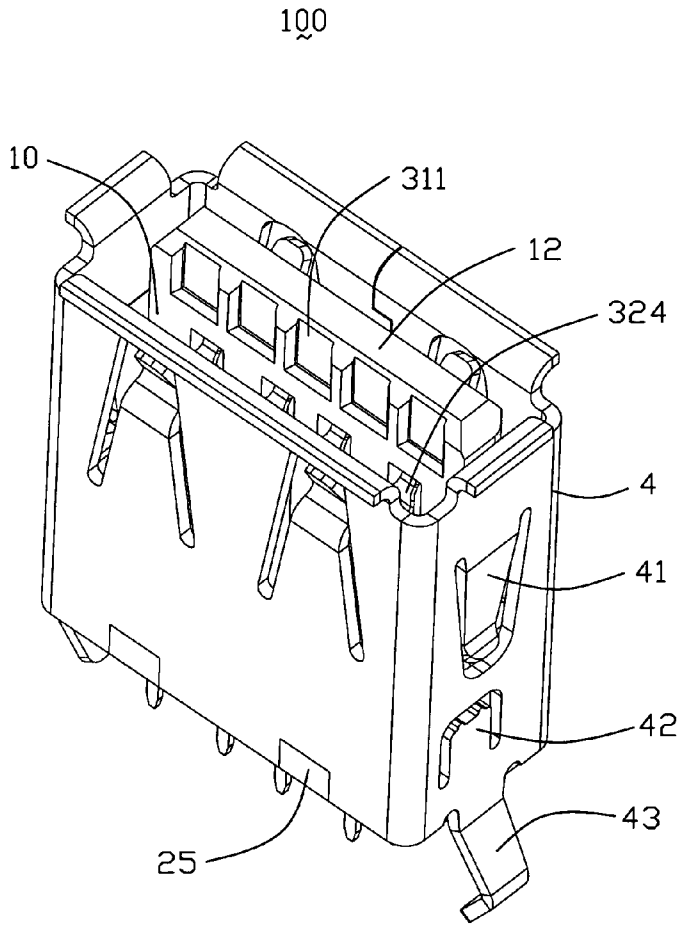

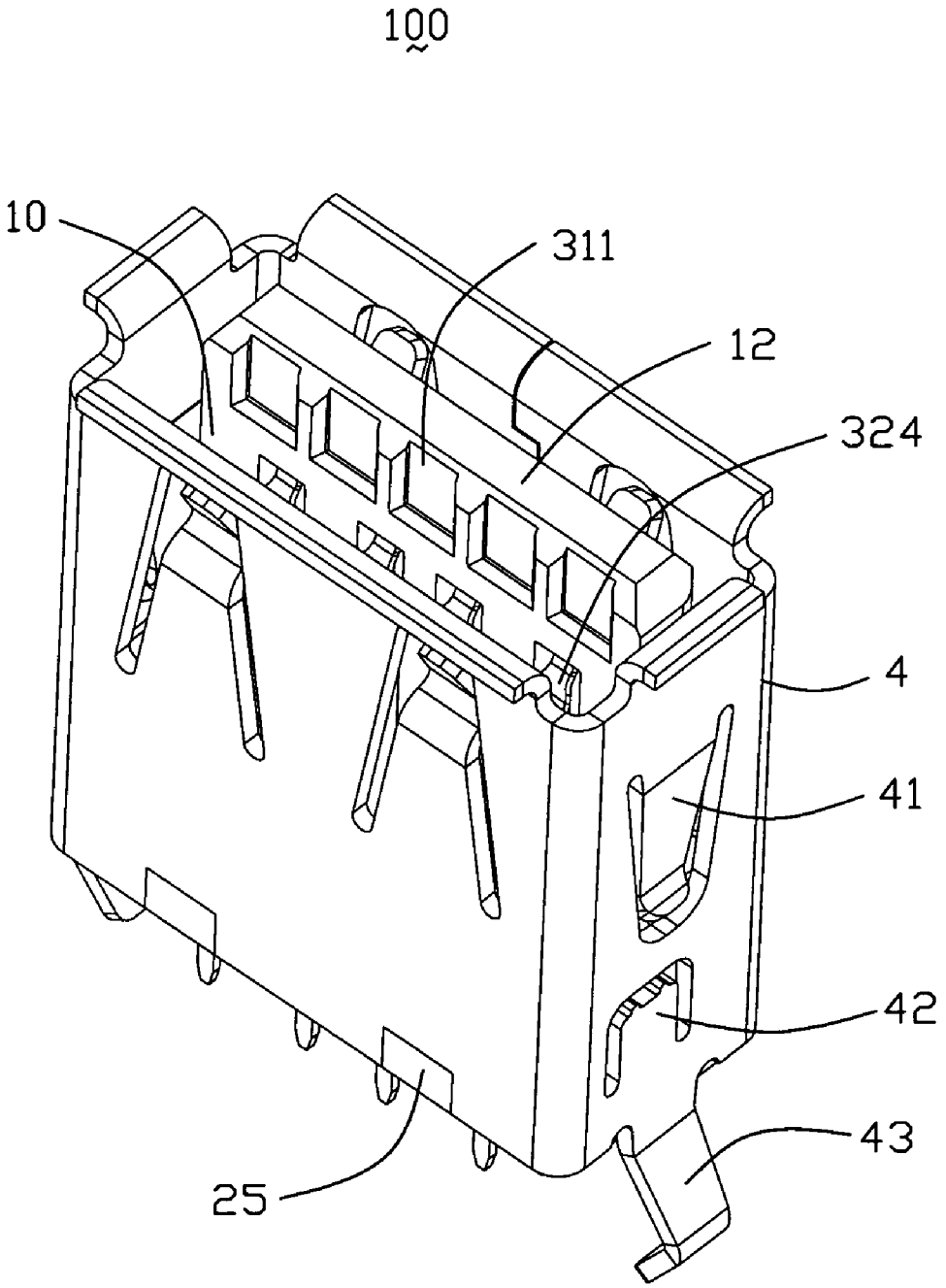

FIG. 1

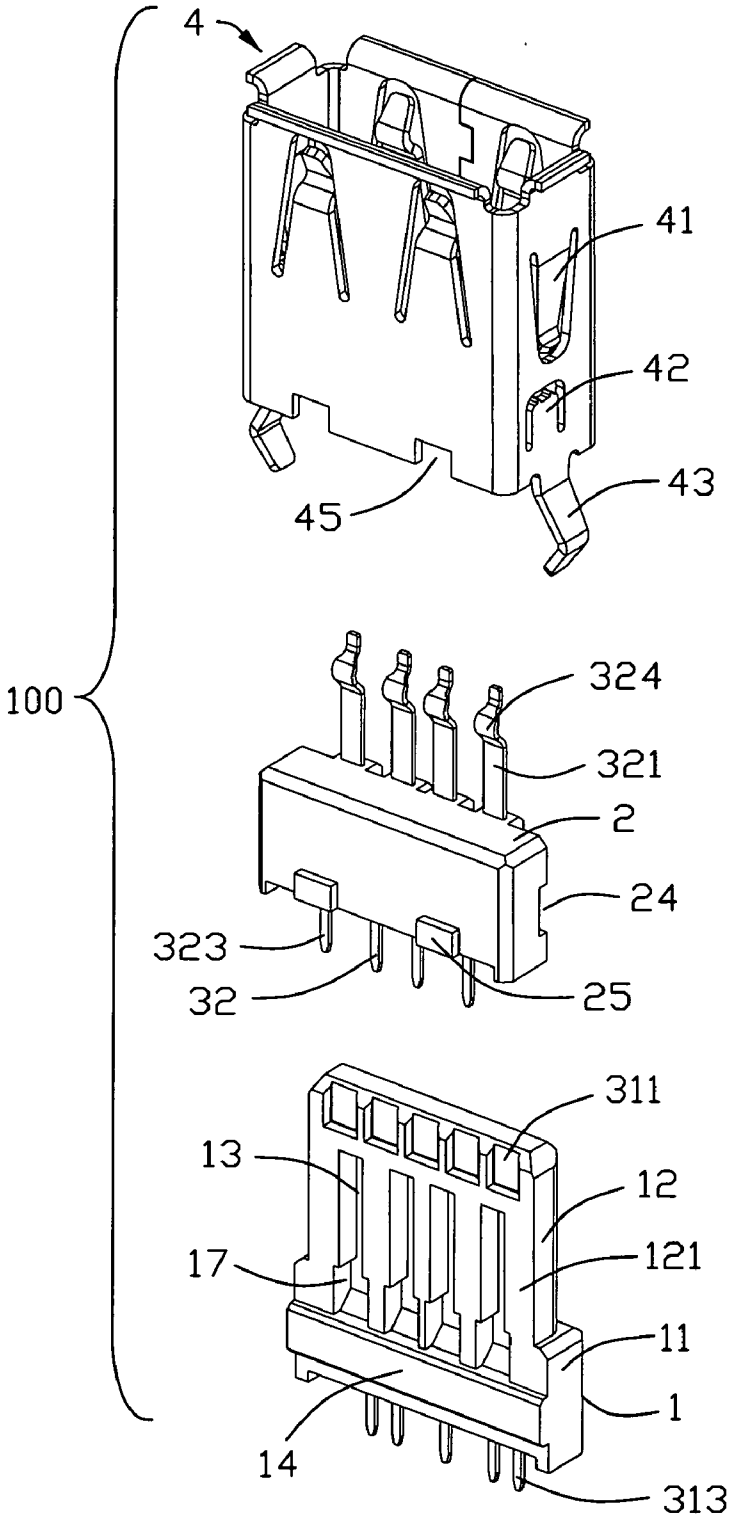

FIG. 2

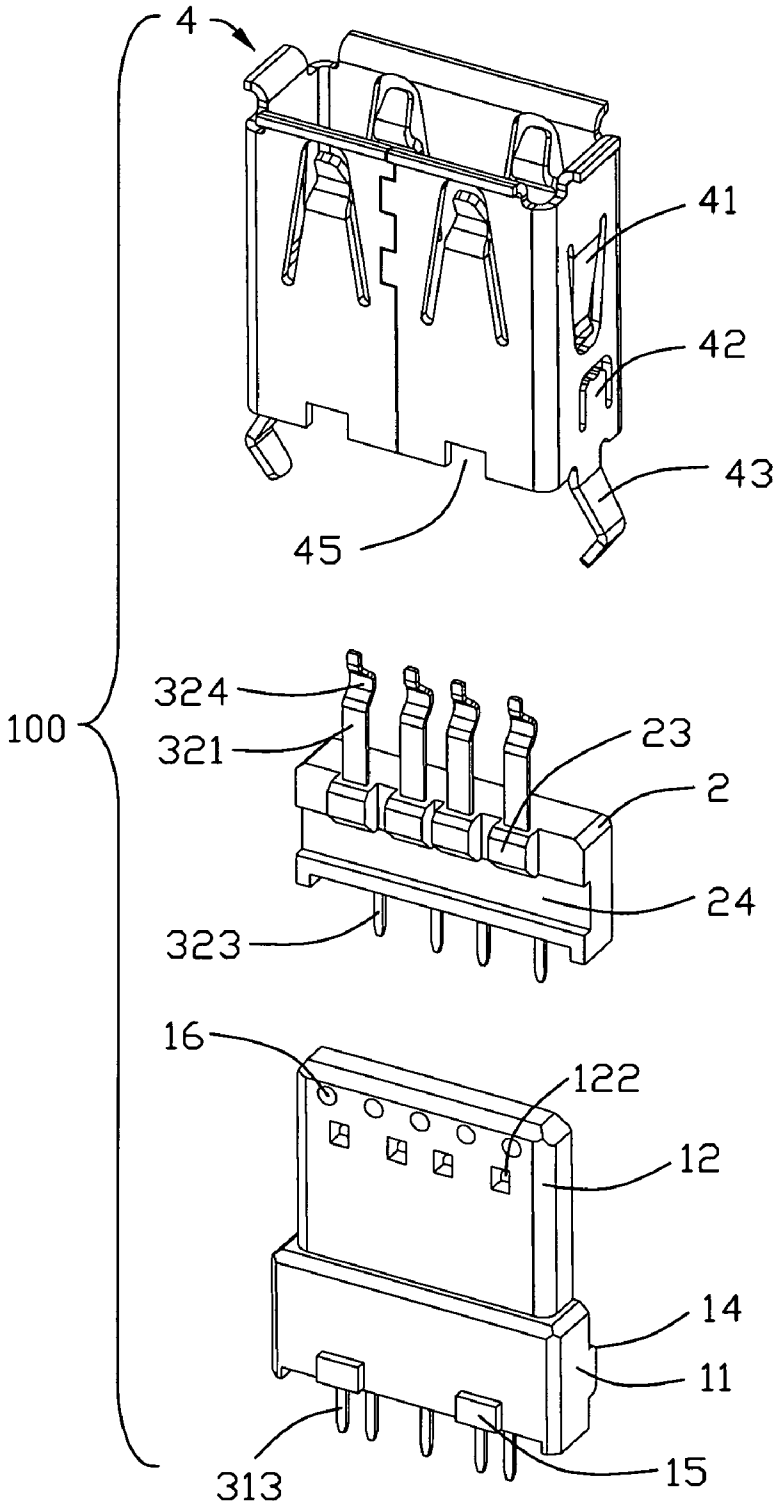

FIG. 3

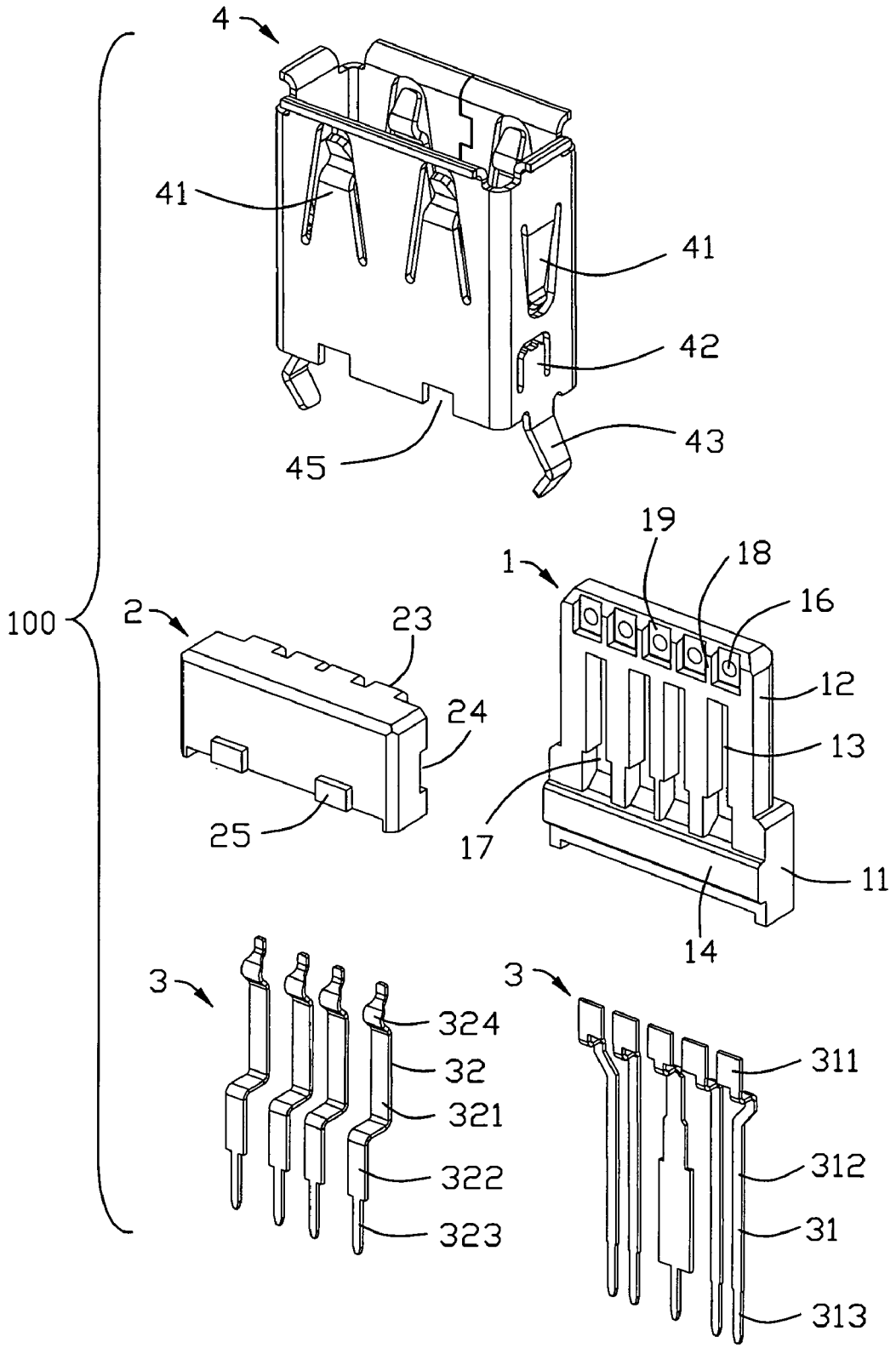
4
41
41
42
43
45
100
2
23
24
25
1
19
18
16
12
13
17
11
14
3
324
32
321
322
323
3
311
312
31
313

FIG. 4

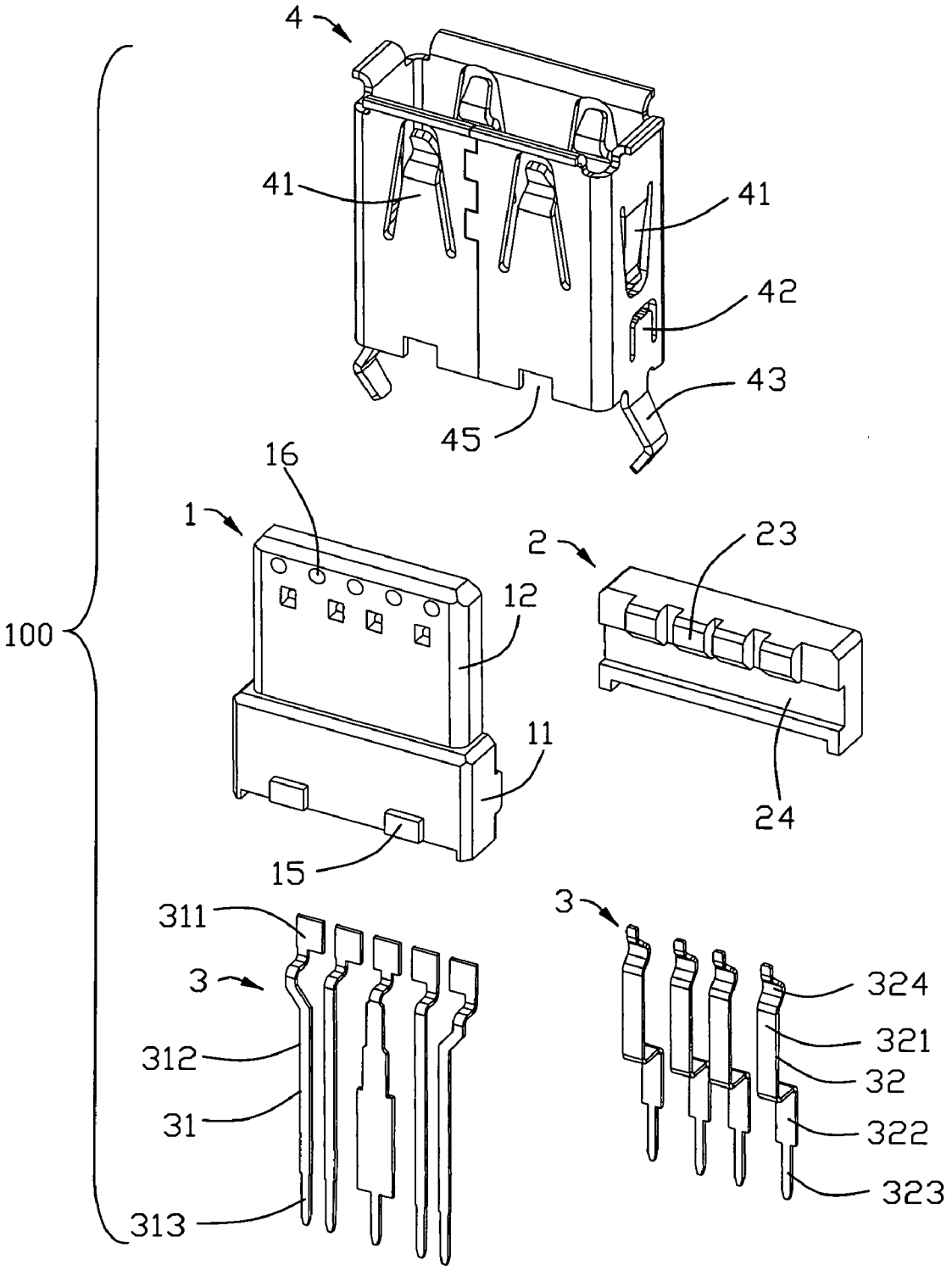
4
41
41
42
43
45
16
1
2
23
12
100
11
24
15
311
3
3
324
321
312
32
31
322
323
313

FIG. 5

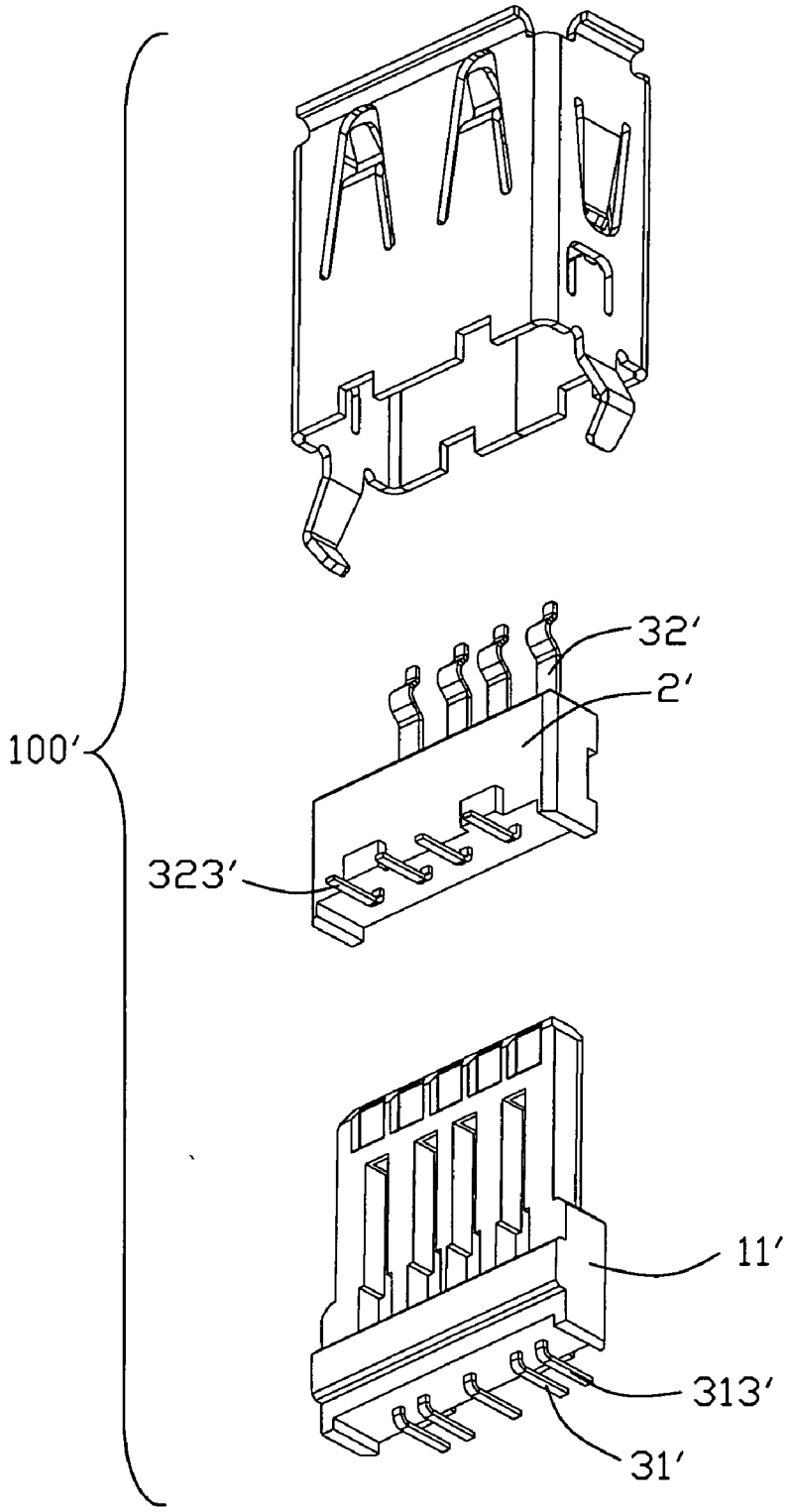

FIG. 6

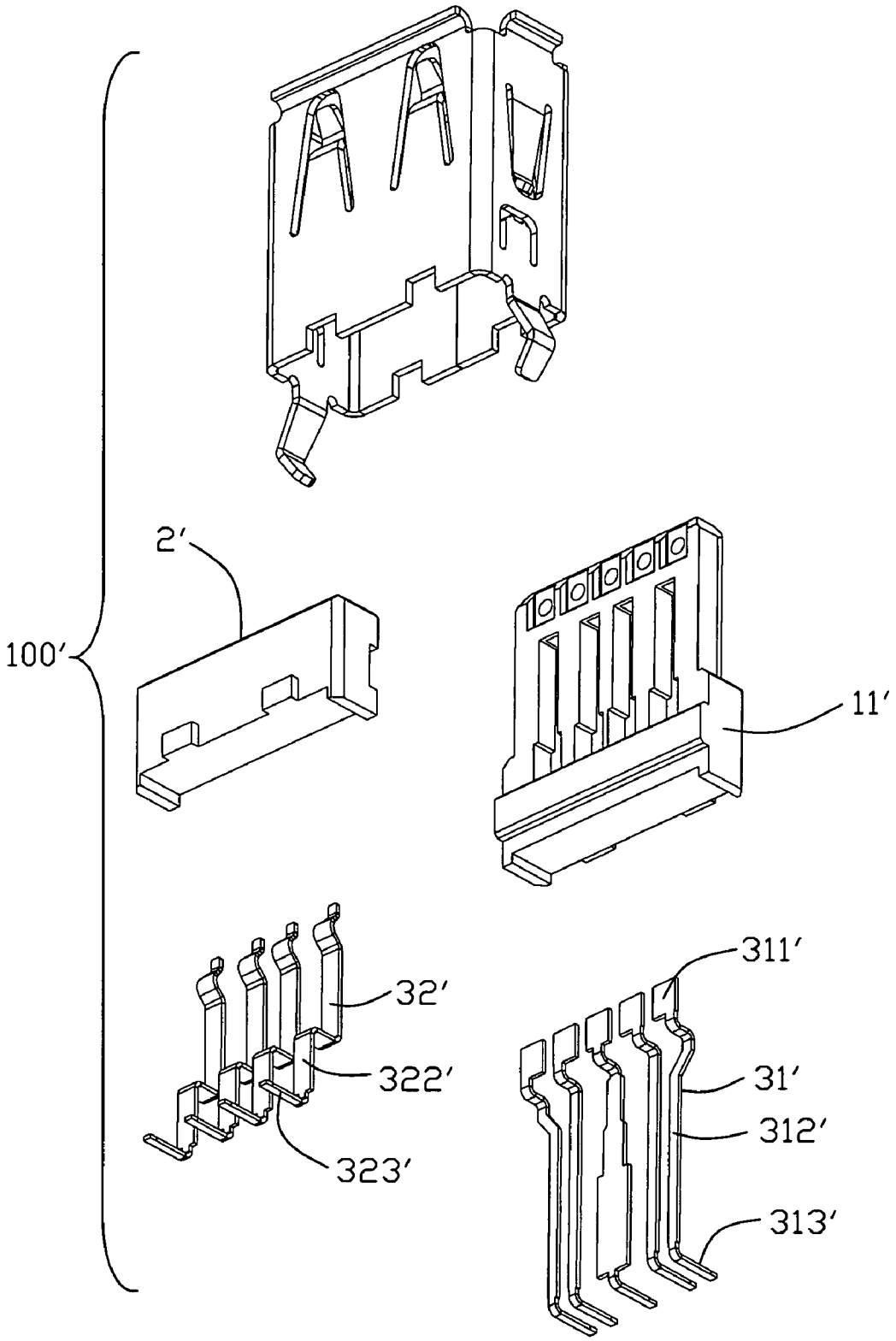

FIG. 7

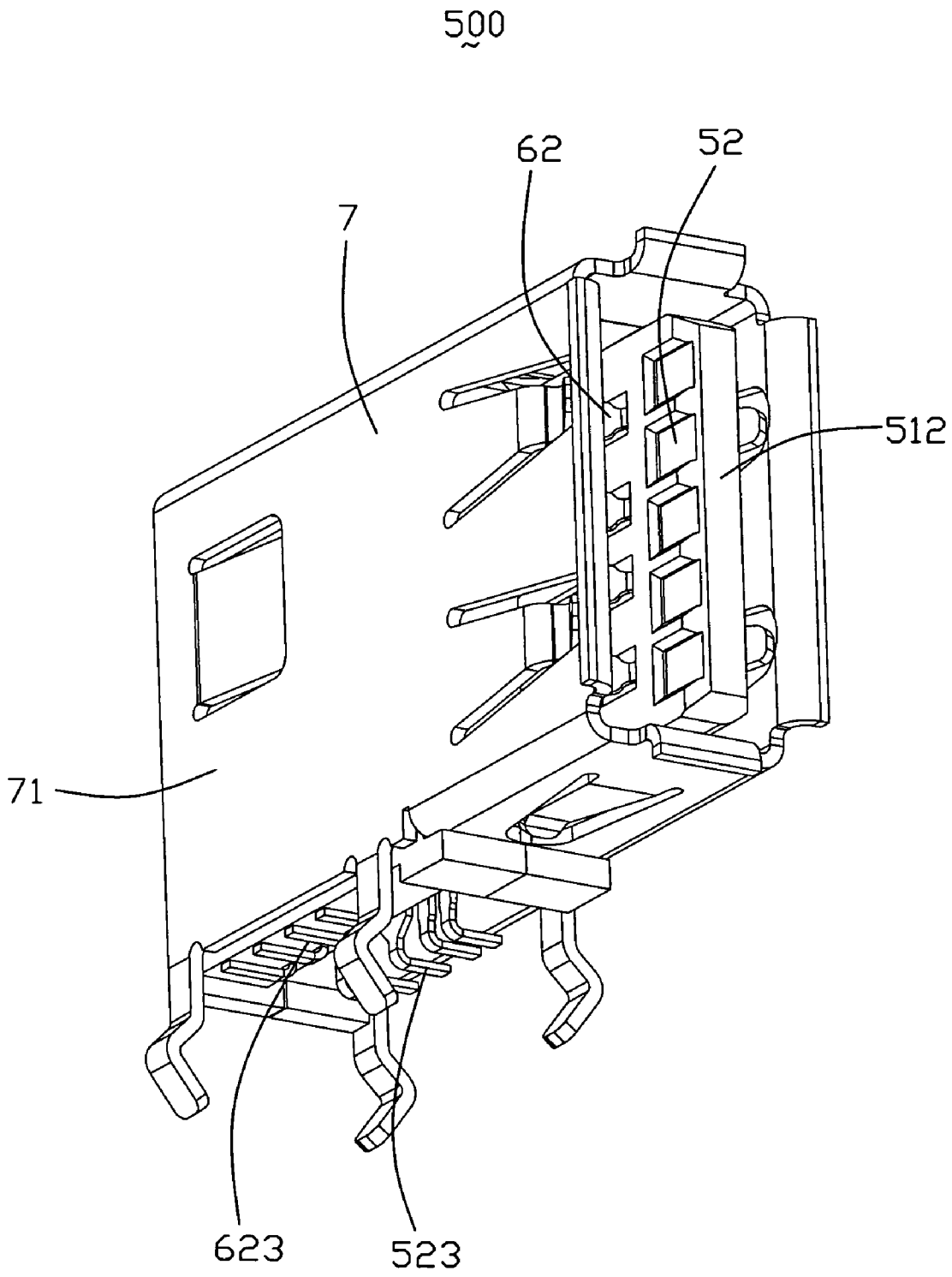

FIG. 8

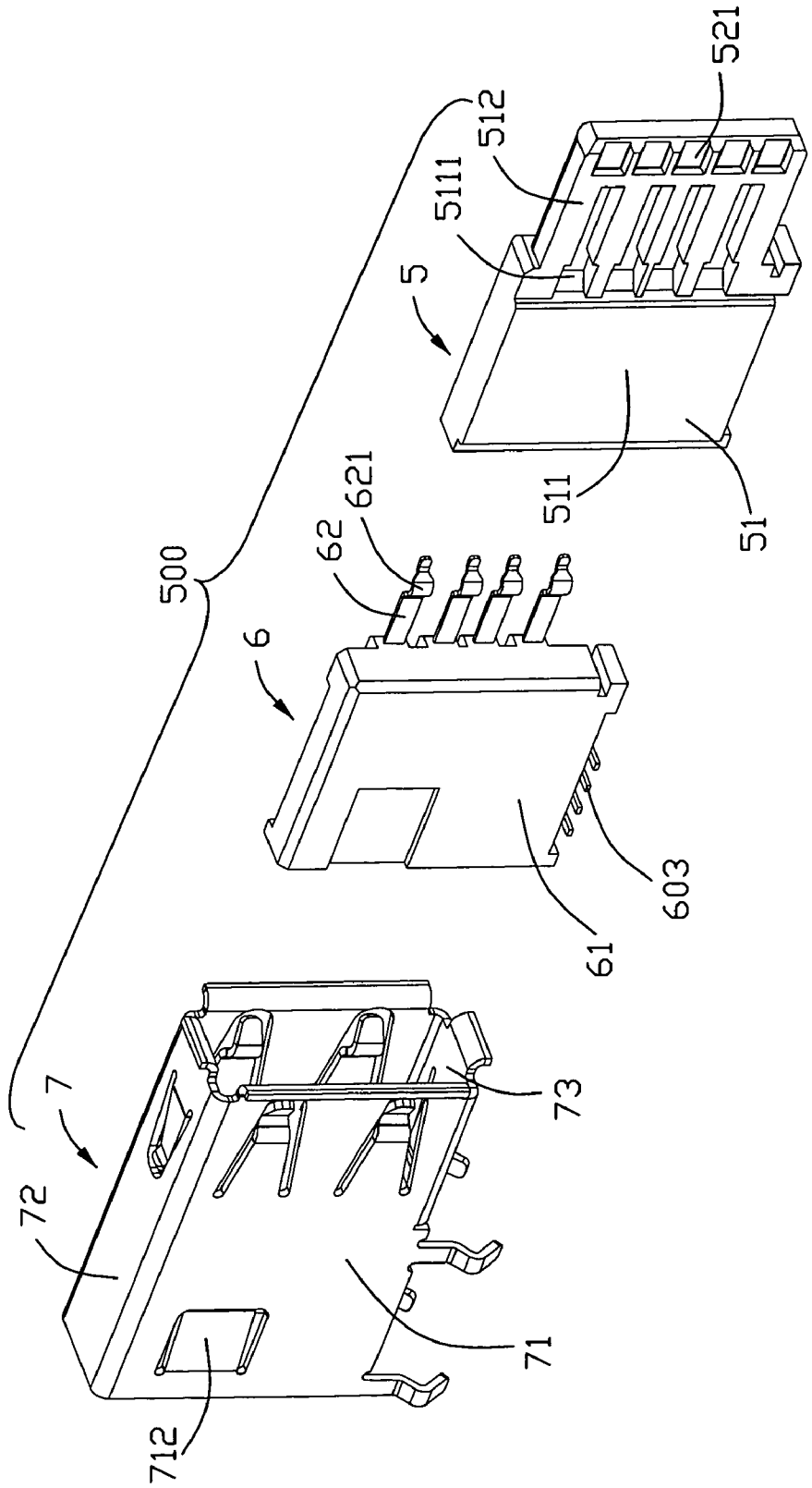

FIG. 9

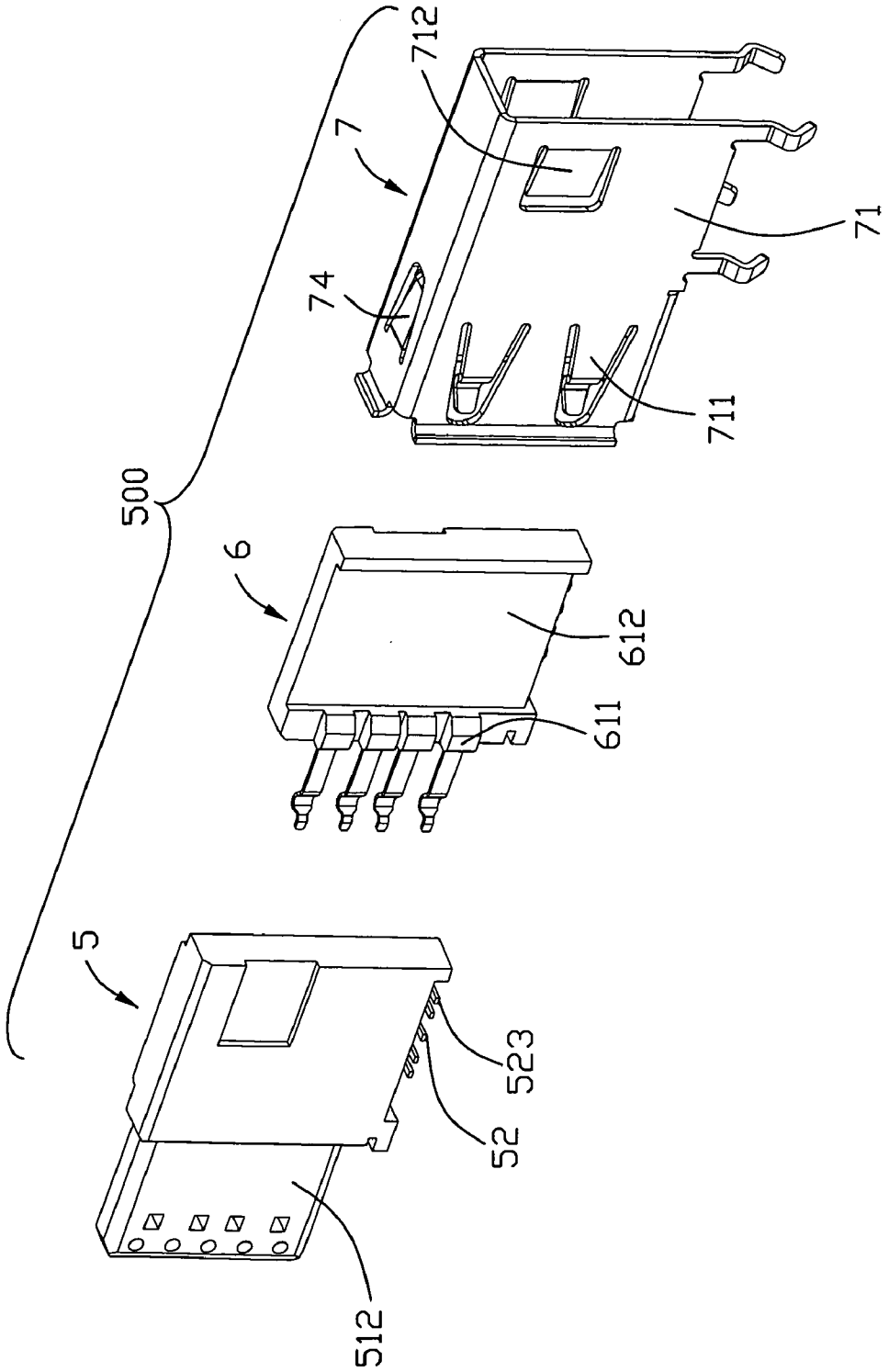

FIG. 10

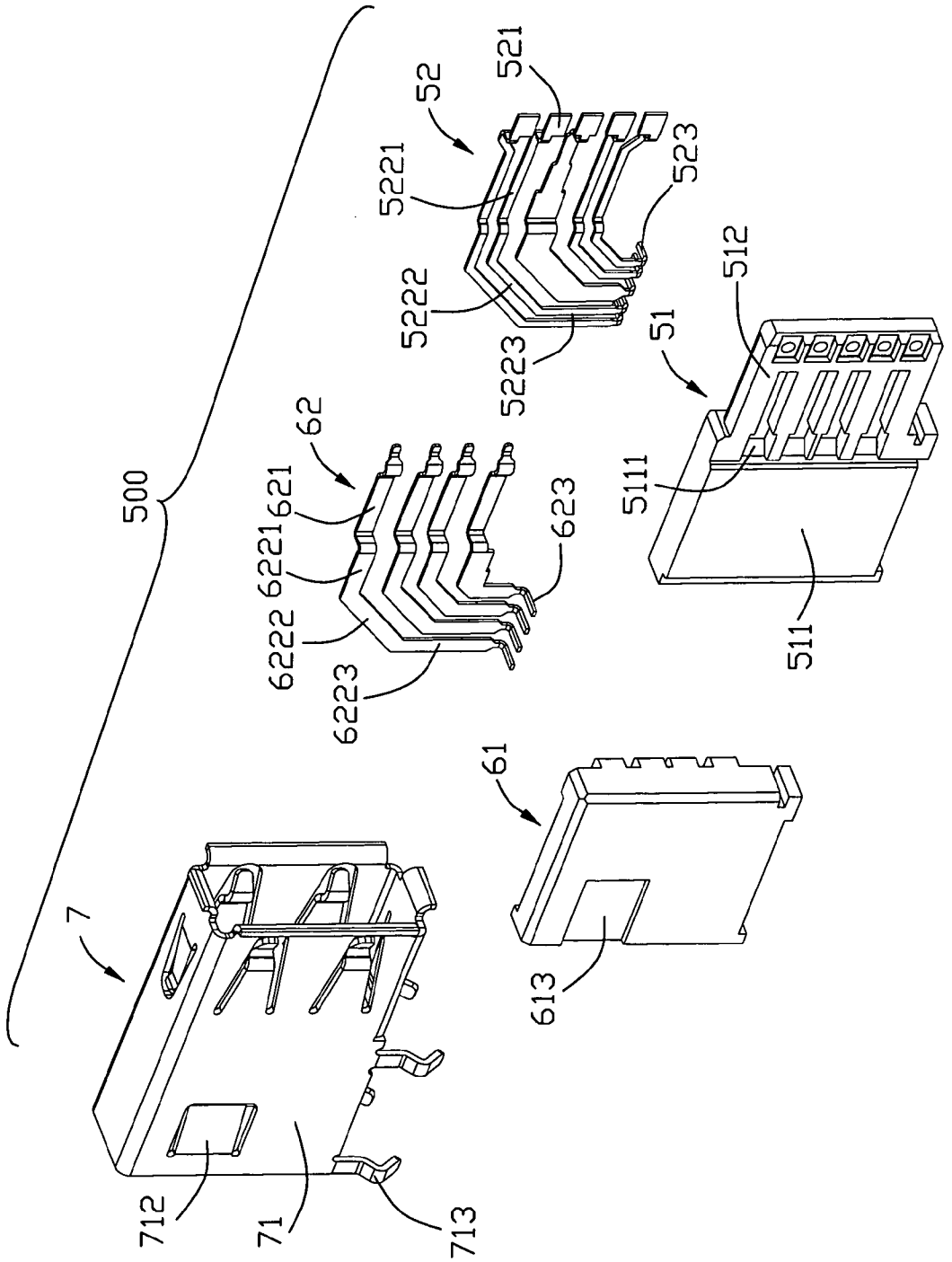
500
7
712
71
713
61
613
62
621
6221
6222
6223
623
52
521
5221
5222
5223
523
51
512
5111
511

FIG. 11

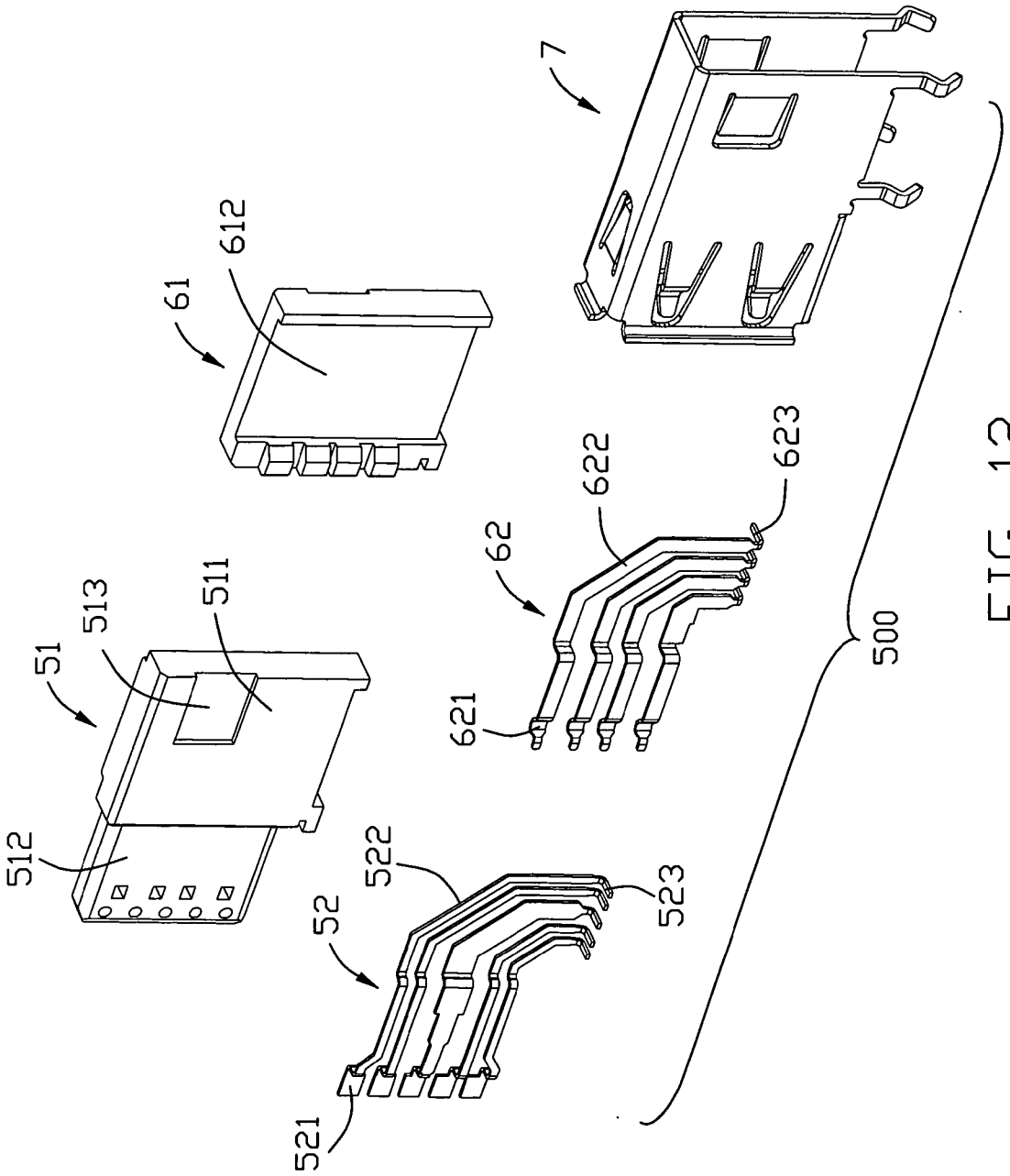

FIG. 12

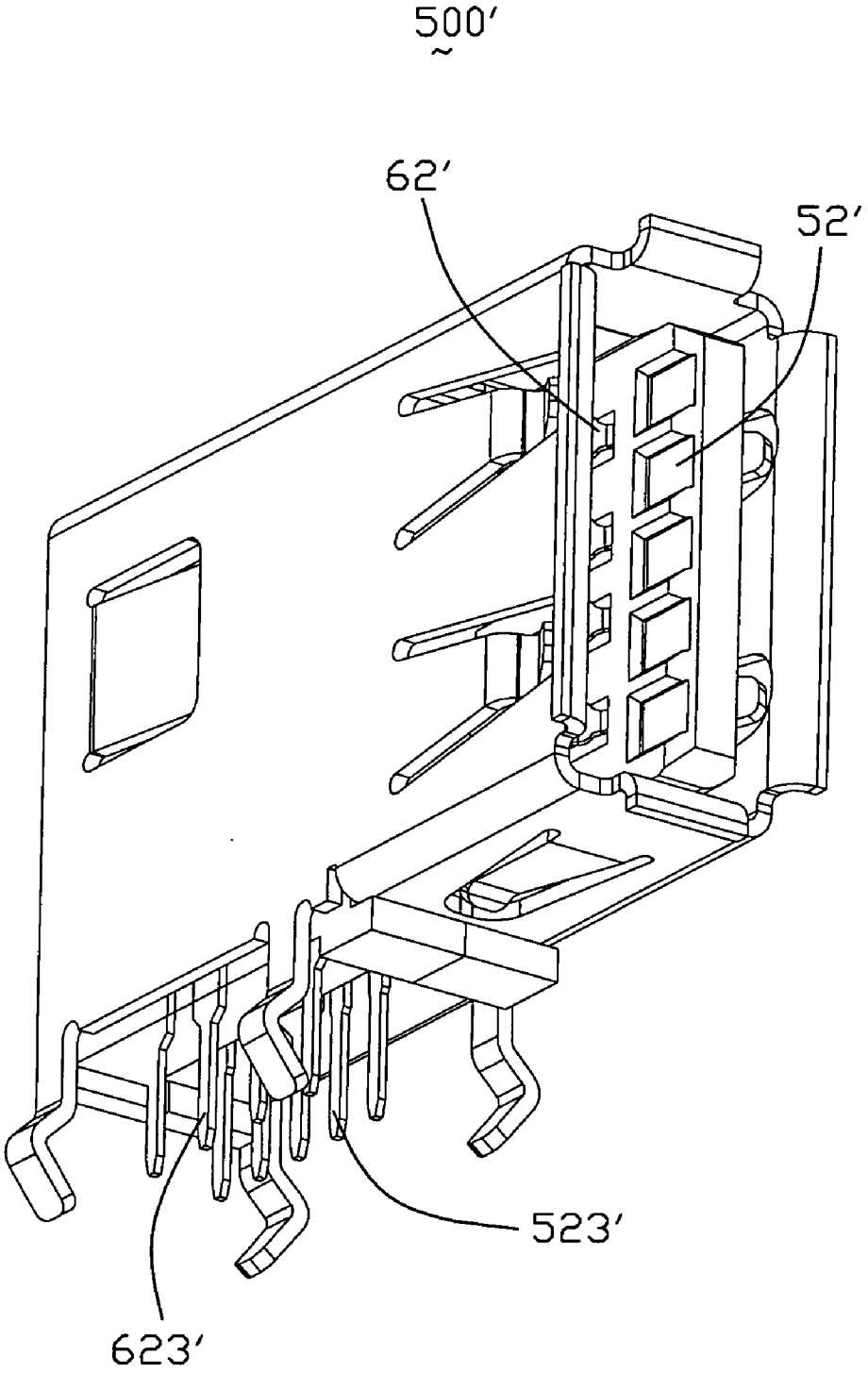

FIG. 13

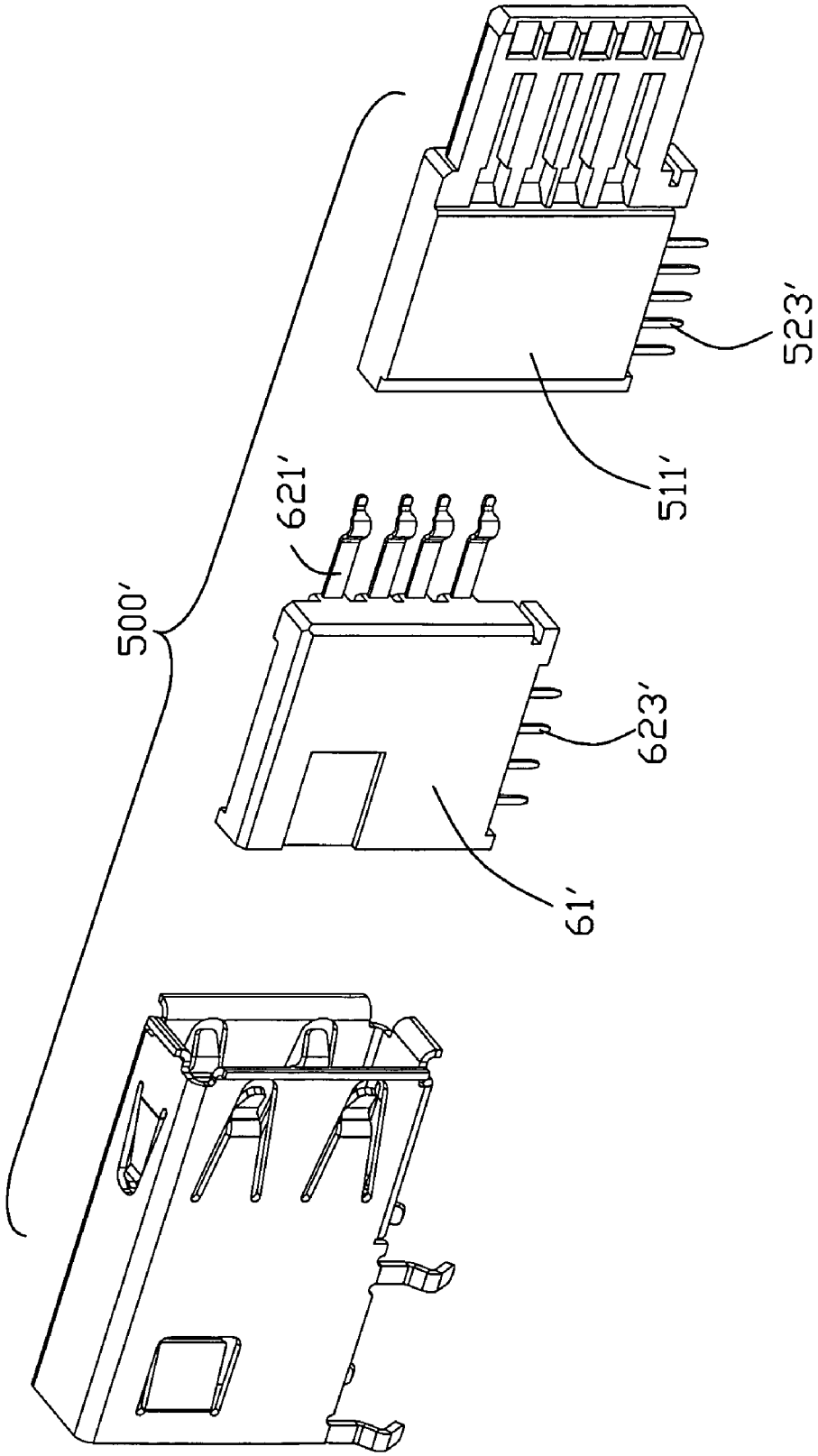

FIG. 14

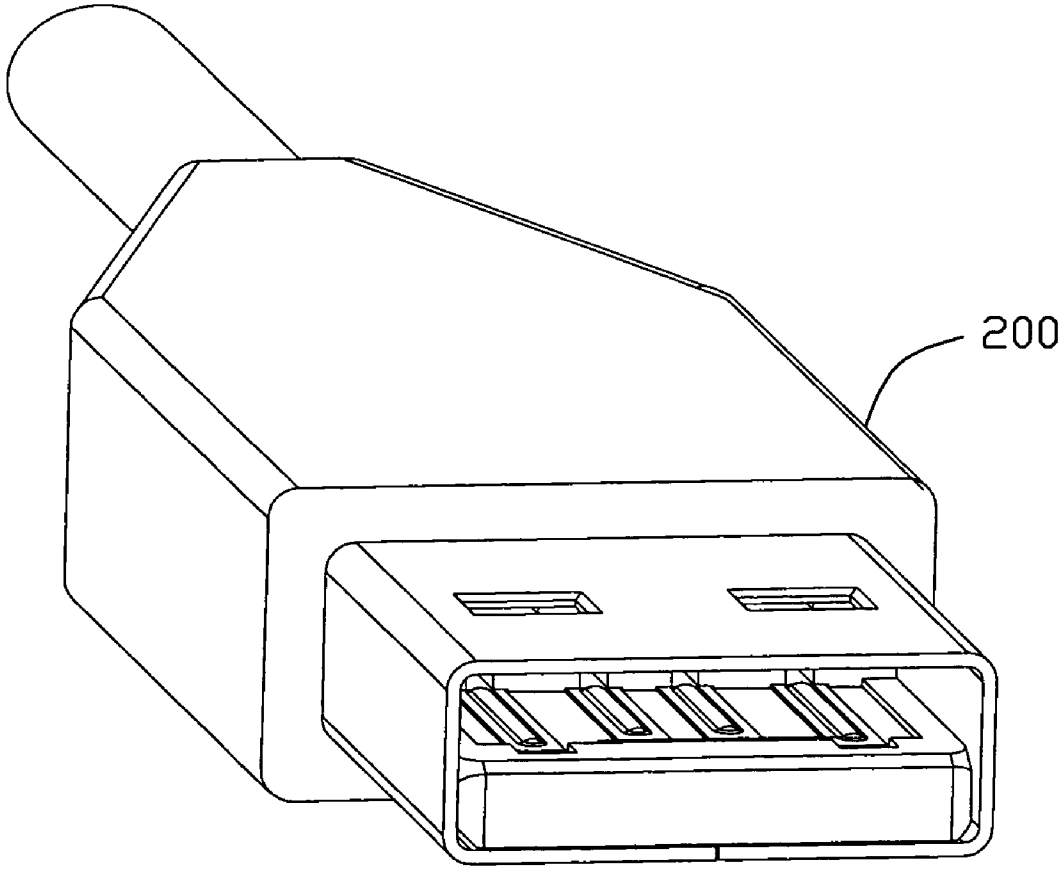

FIG. 15
(PRIOR ART)

ELECTRICAL CONNECTOR WITH IMPROVED CONTACT ARRANGEMENT

BACKGROUND OF THE INVENTION

[0001] 1. Field of the Invention

[0002] The present invention relates to an electrical connector, and more particularly to electrical connectors with improved contact arrangement.

[0003] 2. Description of Related Art

[0004] Universal Serial Bus (USB) is used widely in variety electronic devices as a standard and simple interface. Up to now, previous notable releases of the USB specification were 0.9, 1.0, 1.1 and 2.0. Equipment conforming to any version of the standard will also work with devices designed to any previous specification (known as: backward compatibility).

[0005] USB mentioned above supports three data rates respectively as follows: 1) A Low Speed rate of up to 1.5 Mbit/s (187.5 KB/s) that is mostly used for Human Interface Devices (HID) such as keyboards, mice, and joysticks; 2) A Full Speed rate of up to 12 Mbit/s (1.5 MB/s). Full Speed was the fastest rate before the USB 2.0 specification and many devices fall back to Full Speed. Full Speed devices divide the USB bandwidth between them in a first-come first-served basis and it is not uncommon to run out of bandwidth with several isochronous devices. All USB Hubs support Full Speed; 3) A Hi-Speed rate of up to 480 Mbit/s (60 MB/s).

[0006] USB connector is soldered on a circuit board of an computer usually. The USB 2.0 A type connector according to USB-IF usually comprises an insulative housing with a tongue plate extending forwardly, four contacts retained in the insulative housing and a metal shield. Each contact has a contact portion extending to a lower side of the tongue plate and exposing out thereof flexibly. The contact portion presents as arc type and can move along a thickness direction of the tongue. The four contacts comprise a power contact, a ground contact, a – data contact and a + data contact. The – data contact and + data contact present as a pair of differential signal contacts which are located between the power contact and the ground contact. The metal shield encloses the tongue plate and forms a first receiving space for receiving a USB plug. However, as the development of electric industry, even the USB 2.0 can not satisfy the requirement of many electric devices. For example, under a circumstance transmitting an audio or video file, which is always up to hundreds MB, even to 1 or 2 GB, currently transmission rate of USB is not sufficient.

[0007] Hence, an electrical connector which is based on USB interface, but has a high signal transmission speed and an improved contacts arrangement, is desired to overcome the disadvantage of the prior art.

BRIEF SUMMARY OF THE INVENTION

[0008] According to the present invention, an electrical connector defining an inserting port for connecting a corresponding plug, comprises: a first contact module comprising a first housing and a plurality of first contacts insert molded in the first housing, the first housing comprising a main body and a tongue extending to the inserting port from the main body, the main body defining a plurality of installed grooves at an inner side thereof, the tongue defining a plurality of receiving slots and a number of recesses recessed from a side surface thereof, the receiving slots and recesses being arranged in two rows along an inserting direction of the plug, each first contact has a flat contact portion retained in the recesses and a first soldering portion to be soldered on a circuit board; a second contact module comprising a second housing and a plurality of second contacts insert molded in the second housing, the second housing having a plurality of projections at an inner side thereof to engage with the installed grooves, each second contact having an elastic contact portion extending out of the second housing along a length direction of the second housing and positioned in the receiving slot; and a metal shell covering the first contact module and the second contact module.

[0009] According to another aspect of the present invention, an electrical connector defining an inserting port for connecting a corresponding plug, comprises: a first contact module comprising a first housing and a plurality of first contacts insert molded in the first housing, the first housing having a tongue extending into the inserting portion, each first contact having a first contact portion extending to a free end of the tongue; a second contact module comprising a second housing and a plurality of second contacts insert molded in the second housing, each second contact having a second contact portion extending out of the second housing along a length direction of the second housing, the second contact portions extending to the tongue and offsetting with the first contact portion along a length direction of the tongue; and a metal shell fixing the first contact module and the second contact module together.

[0010] The foregoing has outlined rather broadly the features and technical advantages of the present invention in order that the detailed description of the invention that follows may be better understood. Additional features and advantages of the invention will be described hereinafter which form the subject of the claims of the invention.

BRIEF DESCRIPTION OF THE DRAWINGS

[0011] For a more complete understanding of the present invention, and the advantages thereof, reference is now made to the following descriptions taken in conjunction with the accompanying drawings, in which:

[0012] FIG. **1** is a perspective view of an electrical connector according to a first embodiment of the present invention;

[0013] FIG. **2** is a partial exploded view of the electrical connector shown in FIG. **1**;

[0014] **3** is a view similar to FIG. **2**, while taken from another aspect;

[0015] FIG. **4** is an exploded view of the electrical connector shown in FIG. **1**;

[0016] FIG. **5** is a view similar to FIG. **4**, while taken from another aspect;

[0017] FIG. **6** is a partial exploded view of an electrical connector according to a second embodiment of the present invention;

[0018] FIG. **7** is an exploded view of the electrical connector shown in FIG. **6**;

[0019] FIG. **8** is a perspective view of an electrical connector according to a third embodiment of the present invention;

[0020] FIG. **9** is a partial exploded view of the electrical connector shown in FIG. **8**;

[0021] FIG. **10** is a view similar to FIG. **9**, while taken from another aspect;

[0022] FIG. **11** is an exploded view of the electrical connector shown in FIG. **8**;

[0023] FIG. **12** is a view similar to FIG. **11**, while taken from another aspect;

[0024] FIG. **13** is a perspective view of an electrical connector according to a fourth embodiment of the present invention;

[0025] FIG. **14** is a partial exploded view of the electrical connector shown in FIG. **13**.

[0026] FIG. **15** is a perspective view of a standard USB **2.0** A type plug.

DETAILED DESCRIPTION OF THE PREFERRED EMBODIMENT

[0027] In the following description, numerous specific details are set forth to provide a thorough understanding of the present invention. However, it will be obvious to those skilled in the art that the present invention may be practiced without such specific details. In other instances, well-known circuits have been shown in block diagram form in order not to obscure the present invention in unnecessary detail. For the most part, details concerning timing considerations and the like have been omitted inasmuch as such details are not necessary to obtain a complete understanding of the present invention and are within the skills of persons of ordinary skill in the relevant art.

[0028] Referring to FIGS. **1-3**, an electrical connector **100** according to a first embodiment of the present invention is disclosed. The electrical connector **100** extends along a vertical direction and defines an inserting port **10** for connecting a corresponding plug (not shown). The electrical connector **100** comprises a first contact module and a second contact module fixed with each other, and a metal shell **4** covering the first and second contact modules together. The first contact module comprises a first housing **1** and a plurality of first contacts **31** insert molded in the first housing **1**. The second contact module comprises a second housing **2** and a number of second contacts **32** insert molded in the second housing **2**.

[0029] Referring to FIG. **3** and FIG. **4**, the first housing **1** comprises a main body **11** and a tongue **12** extending upwardly from a top end of the main body **11**. A geometric profile of the tongue **12** is substantially same as that of a standard USB 2.0 A type receptacle. The main body **11** defines a plurality of installed grooves **17** at an inner side thereof, and a block **14** adjacent to the installed grooves **17** projecting inwardly and extending along a width direction thereof. The installed grooves **17** are located at an upper position of the block **14**. The main body **11** has a pair of protrusions **15** extending outwardly from an outside surface thereof for engaging with the metal shell **4**.

[0030] The tongue **12** defines a plurality of receiving slots **13** and a number of recesses **19** recessed from a side surface **121** thereof. The receiving slots **13** and recesses **19** are arranged in two rows along an inserting direction of the plug. The receiving slots **13** communicate with the installed grooves **17**. The recesses **19** extend to a free end of the tongue **12**. The recesses **19** are located at an upper portion of the receiving slots **13** and spaced apart from the receiving slots **13** along a length direction of the tongue **12**. The tongue **12** has a plurality of ribs **18** between adjacent recesses **19** to separate the recesses **19** with each other. The tongue **12** is formed with a plurality of position holes **16** communicating with the recesses **19** and a number of depressions **122** located at a lower position of the position holes **16** and between adjacent first contacts **31**. A mold (not shown) used for molding the first housing **1** has a plurality of small posts at the position of position holes **16** for positioning the first contacts **31**, and a number of pins at the position of depressions **122** for preventing the adjacent first contacts **31** from contacting with each other.

[0031] The first contacts **31** are insert molded into the first housing **1** and each comprises a first contact portion **311** insert molded in the tongue **12**, a first soldering portion **313** extending out of the first housing **1** for being soldered on a circuit board (not shown), and a first connecting portion **312** connecting the first contact portion **311** and the first soldering portion **313**. The first contact portion **311** is flat and extends to the free end of the tongue **12**. The first contact portions **311** are located at the recesses **19** and partly exposed to the inserting port **10**, but not extend out of the side surface **121**. The first connecting portion **312** bends backwardly from a lower end of the first contact portion **311** and extends downwardly, therefore the first contact portion **311** and the first connecting portion **312** are located at different plane along a thickness direction of the tongue **12**. The first connecting portion **312** is insert molded in the first housing **1** for fixing the first contact **31** in the first housing **1**, thereby the first contacts **31** need not be inserted into the first housing **1** for decreasing assembly cost of the electrical connector **100**, and the first contacts **31** can not puncture the first housing **1**. The first soldering portion **313** extends downwardly from a lower end of the connecting portion **312**.

[0032] The first contacts **31** comprise two pairs of differential signal contacts and a grounding contact. The grounding contact is arranged between the two pairs of differential signal contacts for reducing disturb between two pairs of differential signal contacts. The first connecting portion **312** of the grounding contact is wider than that of the differential signal contacts for better reducing disturb between two pairs of differential signal contacts.

[0033] The second housing **2** has a plurality of projections **23** at an inner side thereof for engaging with the installed grooves **17** of the first housing **1**, an installed slot **24** at a lower side of the projections **23** for engaging with the block **14**, and a pair of protrusions **25** extending outwardly from an outside surface thereof for engaging with the metal shell **4**. Therefore, the second housing **2** is arranged at a side portion of the tongue **12** along a width direction of the first housing **1** and located at a rear portion of the tongue **12** along a length direction of the first housing **1**. The second housing **2** has an upper face **21** facing the inserting port **10** and a lower face **22** facing the circuit board.

[0034] Each second contact **32** has a second contact portion **321** extending upwardly, a second soldering portion **323** extending downwardly to connect the circuit board, and a second connecting portion **322** connecting the second contact portion **321** and the second soldering portion **323**. The second contact portion **321** has an arc elastic portion **324**. The second connecting portion **322** bends forwardly from a lower end of the second contact portion **321** and extends downwardly, therefore, the second contact portions **321** and the second connecting portions **322** are located at different plane along a thickness direction of the second housing **2**. The second connecting portion **322** is insert molded in the second housing **2** for fixing the second contact **32** in the second housing **2**, thereby the second contacts **32** need not be inserted into the second housing **2** for decreasing assembly cost of the electrical connector **100**. The second contact portion **321** extends out of the upper face **21** along a length direction of the second housing **2**.

[0035] When the second contact module is assembled to the first contact module, the second contact portion **321** is cantileveredly received in the receiving slots **13**, and the second contact portion **321** is disposed above the side surface **121** and extends into the inserting port **10**. Referring to FIG. **1**, the first contact portion **311** and the second contact portion **321** are arranged at a same side of the tongue **12** along the thickness of the tongue **12**, and the first contact portions **311** are located at an upper side of the second contact portions **321** and spaced apart from the second contact portions **321** along a length direction of the tongue **12**. The flat first contact portion **311** and the elastic second contact portion **321** are located at different plane along the thickness direction of the tongue **12**. The second contacts **32** are adapted for USB protocol and an arrangement of the second contacts is compatible to a standard USB 2.0 A type plug. The second contacts **32** comprise four contacts which are a power contact, a pair of differential signal contacts and a ground contact, and the differential signal contacts are located between the power contact and the ground contact.

[0036] The metal shell **4** is made of a piece of metal sheet, and covers the first housing **1** and the second housing **2**. The metal shell **4** defines a plurality of openings **45** at a front side and rear side thereof for engaging with the protrusions **15**, **25** respectively. The metal shell **4** comprises a plurality of spring arms **41** extending inwardly at each side thereof for engaging with the corresponding plug, and a pair of spring tabs **42** extending upwardly for engaging with the first housing **1** and the second housing **2**. The metal shell **4** has a pair of mounting legs **43** extending downwardly from a lower end thereof for fastening on the circuit board.

[0037] As fully described above, the electrical connector **100** is based on the standard USB 2.0 A type receptacle and adds the first contacts **31** to the standard USB 2.0 A type receptacle, thereby the differential signal contacts in the first contacts **3** increase transmission speed of the electrical connector **100** of the present invention. In addition, the standard USB 2.0 A type plug (shown in FIG. **15**) can be inserted into the electrical connector **100** of the present invention and electrically connect with the second contacts **32** for transmitting USB 2.0 signals. Because the first contacts **31** is flat and not extend out of the side surface, the standard USB 2.0 A type plug can not contact the first contact **31** when the standard USB 2.0 A type plug is withdrawn in the inserting port **10**. Besides, the first contacts **31** and the second contacts **32** are insert molded in the first housing **1** and the second housing **2** respectively for decreasing assemble cost, and the contacts **31**, **32** can not puncture the first housing **1** and the second housing **2**.

[0038] Referring to FIG. **6** and FIG. **7**, an electrical connector **100** according to a second embodiment of the present invention is disclosed. Structures of the electrical connectors **100**, **100'** in the first and second embodiments is similar, and a small difference is that: the first soldering portion **313'** of the first contact **31'** is bended outwardly and horizontally from a lower end of first connecting portion **312'** and extends out of the main body **11'** to be surface mounted on a print circuit board, and the second soldering portion **323'** of the second contact **32'** is bended outwardly and horizontally from a lower end of the second connecting portion **322'** and extends out of the second housing **2'** to be surface mounted on a print circuit board. The first soldering portion **313'** extends opposite to the second soldering portion **323'** and perpendicular to the first contact portion **311'**. The electrical connector **100'** of the second embodiment can achieve the purpose of the present invention also.

[0039] Referring to FIGS. **8-12**, an electrical connector **500** according to a third embodiment of the present invention is disclosed. The electrical connector **500** also comprises a first contact module **5** and a second contact module **6** engaging with each other and a metal shell **7** covering the first and second contact modules **5**, **6**. The first contact module **5** comprises a first housing **51** and a plurality of first contacts **52** insert molded in the first housing **51**. The second contact module **6** comprises a second housing **61** and a plurality of second contacts **62** insert molded in the second housing **61**. The first contacts **52** transmit the same signals as the first contacts **31** transmit. The second contacts **62** transmit the same signals as the second contacts **32** transmit.

[0040] The first housing **51** comprises an upright main body **511** and a tongue **512** extending forwardly from a front end of the main body **511**. A geometric profile of the tongue **512** is substantially same as that of a standard USB 2.0 A type receptacle also. The main body **511** defines a plurality of installed grooves **5111** at an inner side thereof, and a block **5112** adjacent to the installed grooves **5111** projecting inwardly, and a locking recess **513** recessed from an outside surface thereof. The tongue **512** has a structure similar to the tongue **12** except that the tongue **12** extends vertically, but the tongue **512** extends uprightly.

[0041] The first contacts **52** are insert molded into the first housing **51** and each comprises a first contact portion **521** insert molded in the tongue **512**, a first soldering portion **523** extending out of the first housing **51** for being soldered on a circuit board (not shown), and a first connecting portion **522** connecting the first contact portion **521** and the first soldering portion **523**. The arrangement of the first contact portion **521** on the first tongue **512** is same to the arrangement of the first contact portion **311** on the first tongue **12**. Each first connecting portion **522** has a first level portion **5221** extending backwardly and outwardly from the first contact portion **521**, a first inclined portion **5222** extending backwardly and downwardly from a rear end of the first level portion **5221**, and a first vertical portion **5223** extending downwardly from a lower end of the first inclined portion **5222**. The first soldering portion **523** bending outwardly from a lower end of the first vertical portion **5223** and perpendicular to the first vertical portion **5223**. The first contact portions **521** and the first level portions **5221** are arranged in different plane along a thickness direction of the tongue.

[0042] The first contacts **52** comprise two pairs of differential signal contacts and a grounding contact. The grounding contact is arranged between the two pairs of differential signal contacts for reducing disturb between two pairs of differential signal contacts. The first connecting portion **522** of the grounding contact is wider than that of the differential signal contacts for better reducing disturb between two pairs of differential signal contacts.

[0043] The second housing **61** has a plurality of projections **611** at an inner side thereof for engaging with the installed grooves **5111** of the first housing **51**, an installed slot **612** at a lower side of the projections **611** for engaging with the block **5112**, and a locking recess **613** recessed from an outside surface thereof for engaging with the metal shell **7**. Therefore, the second housing **61** is arranged at a side portion of the tongue **512** along a width direction of the first housing **51** and

located at a rear portion of the tongue **512** along a length direction of the first housing **51**.

[0044] Each second contact **62** has a second contact portion **621** extending forwardly, a second soldering portion **623** connecting the circuit board, and a second connecting portion **622** connecting the second contact portion **621** and the second soldering portion **623**. The structure of the second contact portion **621** is same to that of the second contact portions **321**. Each second connecting portion **622** has a second level portion **6221** extending backwardly and outwardly from the second contact portion **621**, a second inclined portion **6222** extending backwardly and downwardly from a rear end of the second level portion **6221**, and a second vertical portion **6223** extending downwardly from a lower end of the second inclined portion **6222**. The second soldering portion **623** bending outwardly from a lower end of the second vertical portion **6223** and perpendicular to the second vertical portion **6223**. The second contact portion **621** extends out of a front face of the second housing **61** along a front-to-back direction of the second housing **61**. The second contact portions **621** and the second level portions **6221** are arranged in different plane along a thickness direction of the second housing **61**.

[0045] When the second contact module **6** is assembled to the first contact module **5**, the second contact portion **621** is cantileveredly received in the tongue **512**. The arrangement of the second contact portion **621** on the tongue **512** is same to that of the second contact portion **321** on the tongue **12**. The second contacts **621** are adapted for USB protocol and an arrangement of the second contacts **621** is compatible to a standard USB 2.0 A type plug. The second contacts **621** comprise four contacts which are a power contact, a pair of differential signal contacts and a ground contact, and the differential signal contacts are located between the power contact and the ground contact.

[0046] The metal shell **7** is made of a piece of metal sheet, and covers the first housing **51** and the second housing **61**. The metal shell **7** has a pair of side walls **71**, a top wall **72** and a lower wall **73**. Each side wall **71** has a pair of spring arms **711** extending forwardly for engaging with a corresponding plug, and a spring tab **712** at a rear position thereof for locking with the locking recess **513**, **613**. The top wall **72** and lower wall **73** each has a spring arm **74** extending backwardly for fastening the plug. Each side wall **71** has a pair of mounting legs **713** extending downwardly for mounting to the circuit board.

[0047] Referring to FIGS. **8-12**, the electrical connector **500** according to the third embodiment of the present invention is based on the standard USB 2.0 A type receptacle and adds the first contacts **52** to the standard USB 2.0 A type receptacle too, thereby the differential signal contacts in the first contacts **52** increase transmission speed of the electrical connector **500** in the present invention. In addition, the standard USB 2.0 A type plug (shown in FIG. **15**) can be inserted into the electrical connector **500** of the present invention and electrically connect with the second contacts **62** for transmitting USB 2.0 signals. Besides, the first contacts **52** and the second contacts **62** are insert molded in the first housing **51** and the second housing **61** respectively for decreasing assemble cost, and the contacts **52**, **62** can not puncture the first housing **51** and the second housing **61**.

[0048] Referring to FIGS. **13** and **14**, an electrical connector **500'** according to a fourth embodiment of the present invention is disclosed. Structures of the electrical connectors **500**, **500'** in the third and fourth embodiments are similar, and a small difference is that: the first soldering portion **523'** of the first contact **52'** extends downwardly and perpendicularly from a lower end of first connecting portion and extends out of the main body **511'**, and the second soldering portion **623'** of the second contact **62'** extends downwardly and perpendicularly from a lower end of the second connecting portion and extends out of the second housing **61'**. The electrical connector **500'** of the fourth embodiment can achieve the purpose of the present invention also.

[0049] As fully described above, different embodiments of the present invention have been disclosed, and all electrical connectors **100**, **100'**, **500** and **500'** are based on the standard USB 2.0 A type receptacle, and each adds a plurality of first contacts with two pairs of differential signal contacts than the standard USB 2.0 proposal for increasing the transmission speed thereof. In addition, each electrical connector **100**, **100'**, **500** or **500'** has a pair of contact modules for being assembled conveniently and protecting the housing from puncturing.

[0050] It is to be understood, however, that even though numerous, characteristics and advantages of the present invention have been set fourth in the foregoing description, together with details of the structure and function of the invention, the disclosed is illustrative only, and changes may be made in detail, especially in matters of number, shape, size, and arrangement of parts within the principles of the invention to the full extent indicated by the broad general meaning of the terms in which the appended claims are expressed.

What is claimed is:

1. An electrical connector defining an inserting port for connecting a corresponding plug, comprising:

a first contact module comprising a first housing and a plurality of first contacts insert molded in the first housing, the first housing comprising a main body and a tongue extending to the inserting port from the main body, the main body defining a plurality of installed grooves at an inner side thereof, the tongue defining a plurality of receiving slots and a number of recesses recessed from a side surface thereof, the receiving slots and recesses being arranged in two rows along an inserting direction of the plug, each first contact has a flat contact portion retained in the recesses and a first soldering portion to be soldered on a circuit board;

a second contact module comprising a second housing and a plurality of second contacts insert molded in the second housing, the second housing having a plurality of projections at an inner side thereof to engage with the installed grooves, each second contact having an elastic contact portion extending out of the second housing along a length direction of the second housing and positioned in the receiving slot; and

a metal shell covering the first contact module and the second contact module.

2. The electrical connector according to claim **1**, wherein a geometric profile of the tongue is substantially same as that of a standard USB 2.0 A type receptacle, and the second contacts are adapted for USB protocol and an arrangement of the second contacts is compatible to a standard USB 2.0 A type plug.

3. The electrical connector according to claim **1**, wherein the second housing is arranged at a side portion of the tongue

along a width direction of the first housing and located at a rear portion of the tongue along a length direction of the first housing.

4. The electrical connector according to claim **1**, wherein the receiving slots communicate with the installed grooves, and the recesses are spaced apart from the receiving slots along a length direction of the tongue.

5. The electrical connector according to claim **1**, wherein the recesses extend to a free end of the tongue.

6. The electrical connector according to claim **1**, wherein the tongue is formed with a plurality of ribs between adjacent recesses to separate the recesses with each other.

7. The electrical connector according to claim **1**, wherein the elastic contact portion is disposed above the side surface, and the flat contact portion is partly exposed to the inserting port and not extend out of the side surface.

8. The electrical connector according to claim **1**, wherein each first contact has a first connecting portion between the flat contact portion and the first soldering portion and insert molded in the first housing, and the flat contact portions and the first connecting portions are arranged in different plane along a thickness direction of the tongue.

9. The electrical connector according to claim **1**, wherein each second contact has a second soldering portion to connect the circuit board and a second connecting portion between the elastic contact portion and the second soldering portion and insert molded in the second housing, and the elastic contact portions and the second connecting portions are arranged in different plane along a thickness direction of the second housing.

10. The electrical connector according to claim **1**, wherein the first housing has a block adjacent to the installed grooves and projecting inwardly, and the second housing defines an installed slot to engage with the block.

11. The electrical connector according to claim **1**, wherein the tongue is formed with a plurality of position holes communicating with the recesses for positioning the first contacts and a plurality of depressions between adjacent first contacts to prevent the adjacent first contacts from contacting with each other.

12. An electrical connector defining an inserting port for connecting a corresponding plug, comprising:

a first contact module comprising a first housing and a plurality of first contacts insert molded in the first housing, the first housing having a tongue extending into the inserting portion, each first contact having a first contact portion extending to a free end of the tongue;

a second contact module comprising a second housing and a plurality of second contacts insert molded in the second housing, each second contact having a second contact portion extending out of the second housing along a length direction of the second housing, the second contact portions extending to the tongue and offsetting with the first contact portion along a length direction of the tongue; and

a metal shell fixing the first contact module and the second contact module together.

13. The electrical connector according to claim **12**, wherein the first contact portions and the second contact portions are arranged at a same side of the tongue and located at different plane along a thickness direction of the tongue.

14. The electrical connector according to claim **13**, wherein the tongue defines a plurality of receiving slots adjacent to the first contact portions in the length direction of the tongue and spaced apart from the first contact portions.

15. The electrical connector according to claim **14**, wherein the second contact portions are cantileverdly received in the receiving slots and extend out of the tongue along a thickness direction of the tongue.

16. The electrical connector according to claim **13**, wherein a geometric profile of the tongue is substantially same as what of a standard USB 2.0 A type receptacle, and the second contacts are adapted for USB protocol and an arrangement of the second contacts is compatible to a standard USB 2.0 A type plug.

17. An electrical connector comprising:

a first insulative unit defining a mating tongue with opposite first and second faces thereof, a plurality of passageways formed in the first face;

a plurality of first contacts disposed in the first unit, each of the first contacts defining a planar un-deflectable contacting section exposed upon a front portion of the first face;

a second insulative unit;

a plurality of second contacts disposed in the second unit with a curved deflectable contacting portion extending forward beyond the second unit and extending into the corresponding passageway with a contact point region exposed outside of the mating tongue away from the first face; wherein

said first unit and said second unit are assembled with each other.

18. The electrical connector as claimed in claim **17**, wherein said first contacts all have the same dimensioned contacting sections while a main body of a center one of said first contacts is wider than those of others.

* * * * *