US007361059B2

(12) **United States Patent**
Harkabi et al.

(10) **Patent No.: US 7,361,059 B2**
(45) **Date of Patent: Apr. 22, 2008**

(54) **ELECTRICAL CONNECTOR**

(75) Inventors: **Dan Harkabi**, Moshav Lachish (IL); **Gidon Elazar**, Tsur-Yigal (IL); **Nehemiah Weingarten**, Tel-Aviv (IL)

(73) Assignee: **Sandisk Secure Content Solutions, Inc**, Sunnyvale, CA (US)

(*) Notice: Subject to any disclaimer, the term of this patent is extended or adjusted under 35 U.S.C. 154(b) by 0 days.

(21) Appl. No.: **10/898,859**

(22) Filed: **Jul. 26, 2004**

(65) **Prior Publication Data**

US 2005/0042930 A1 Feb. 24, 2005

Related U.S. Application Data

(60) Provisional application No. 60/490,413, filed on Jul. 28, 2003.

(51) **Int. Cl.**
H01R 24/00 (2006.01)

(52) **U.S. Cl.** **439/660**; 439/218

(58) **Field of Classification Search** 439/660, 439/217, 218, 626, 676, 954, 101, 108
See application file for complete search history.

(56) **References Cited**

U.S. PATENT DOCUMENTS

3,760,335	A	9/1973	Roberts	
5,270,964	A	12/1993	Bechtolsheim et al.	
5,295,843	A *	3/1994	Davis et al.	439/108
5,442,243	A *	8/1995	Bailey	307/10.5
5,540,601	A *	7/1996	Botchek	439/218
6,325,650	B1	12/2001	Wilson et al.	
6,630,747	B1 *	10/2003	Kamada et al.	439/218
2002/0132506	A1	9/2002	Wilson et al.	
2003/0049949	A1	3/2003	Abe	
2003/0100203	A1	5/2003	Yen	
2003/0171035	A1 *	9/2003	Yoo	439/638
2005/0079738	A1	4/2005	Ahn	

FOREIGN PATENT DOCUMENTS

DE	1855448	U	7/1962
EP	0571092	A2	11/1993
EP	1 670 101	A1	6/2006
FR	2583929		12/1986
JP	2003217728	A	7/2003
KR	100424781	B	3/2004
WO	WO 2005/013436	A	2/2005

OTHER PUBLICATIONS

EPO/ISA, "Notification of Transmittal of the International Search Report and the Written Opinion of the International Searching Authority, or the Declaration", mailed in corresponding PCT/US2004/024167 on Dec. 12, 2004, 13 pages.

Compaq et al. "Universal Serial Bus Specification," Rev. 2.0, Apr. 27, 2000, "Table of Contents" and "Chapter 6 Mechanical," pp. 85-118.

Examiner's Report for European Patent Application No. 04 779 295.7 dated Feb. 14, 2007, 4 pages.

Office Action for Chinese Patent Application No. 200480021538.5 for SanDisk Corporation, dated Aug. 10, 2007, 7 pages.

* cited by examiner

Primary Examiner—Felix O. Figueroa
(74) *Attorney, Agent, or Firm*—Davis Wright Tremaine LLP

(57) **ABSTRACT**

An electrical connector, for example a connector that will operate with the Universal Serial Bus, is disclosed. In some embodiments, the connector includes none, one, or several tongue board, tongue tip, electrical contact, housing shell, insulating strip on the inner lining of housing shell, protective edge. A connector integral to a printed circuit board is also disclosed. Other embodiments are disclosed.

12 Claims, 13 Drawing Sheets

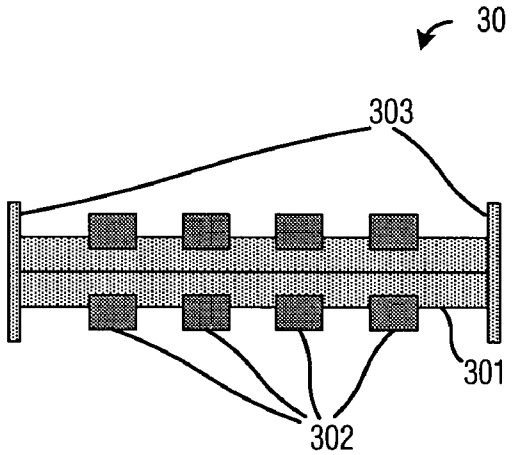

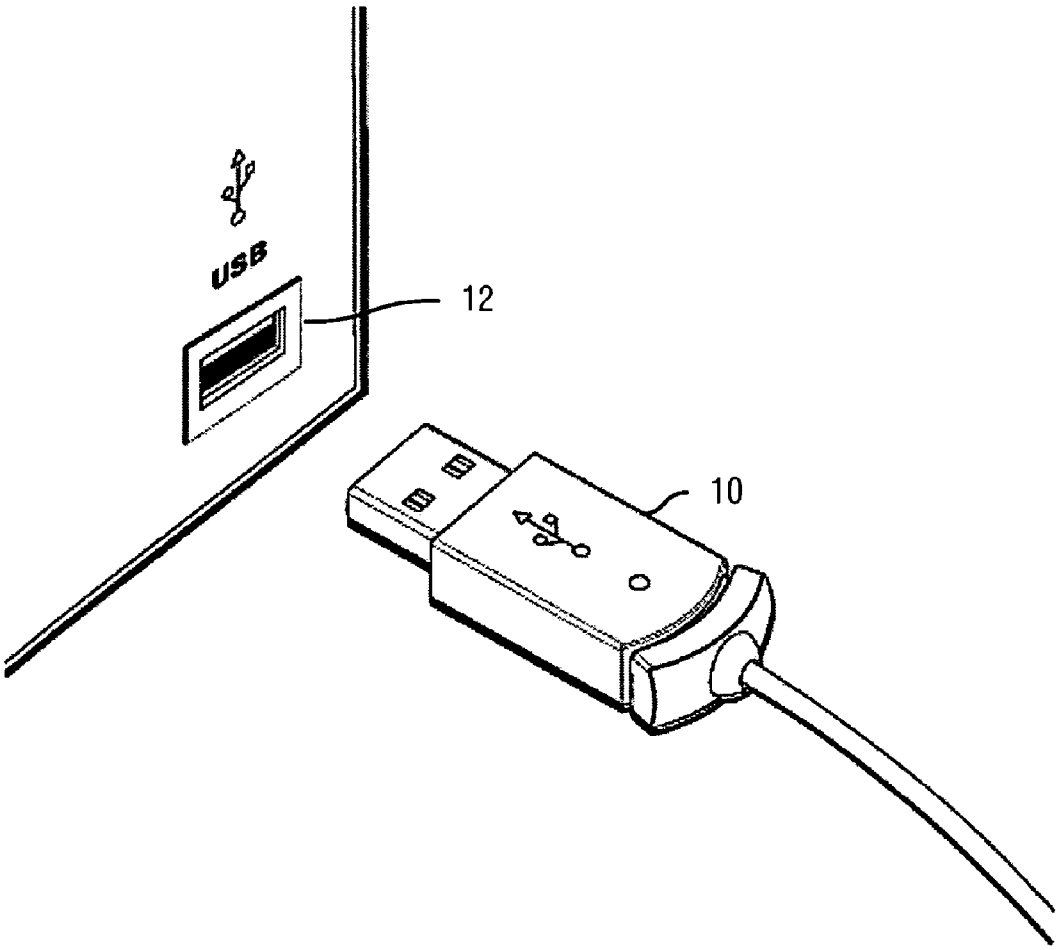

Fig. 1
(Prior Art)

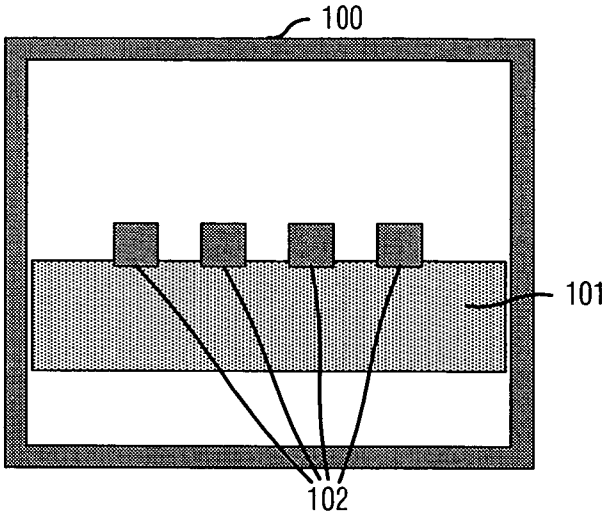

Fig. 2a
(Prior Art)

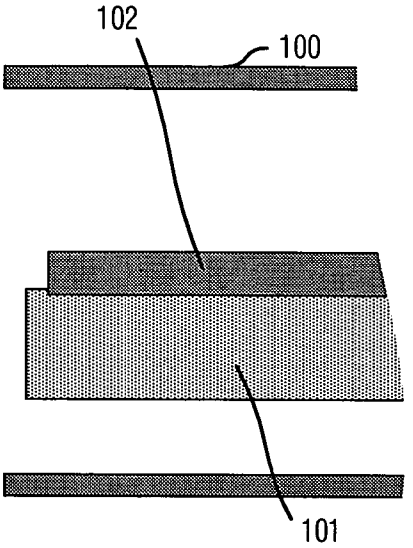

Fig. 2b
(Prior Art)

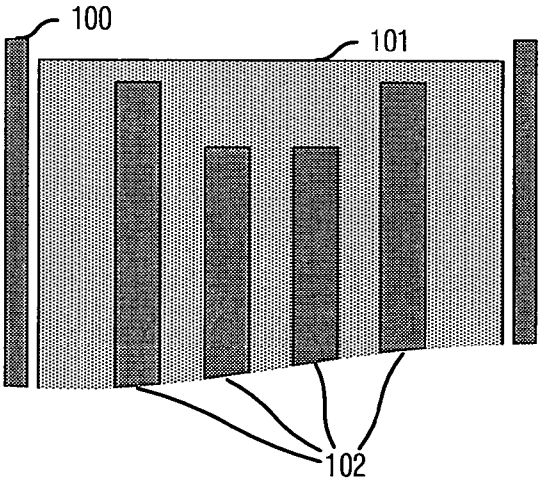

Fig. 2c
(Prior Art)

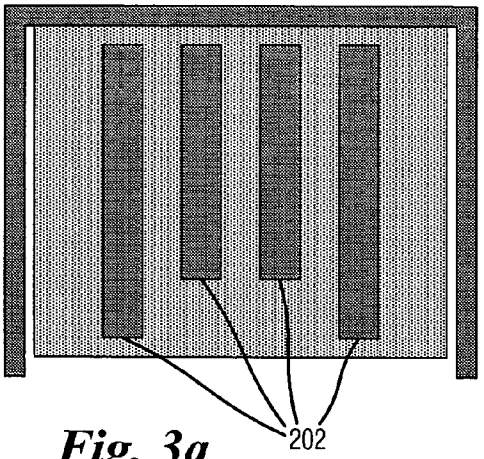

Fig. 3a
(Prior Art)

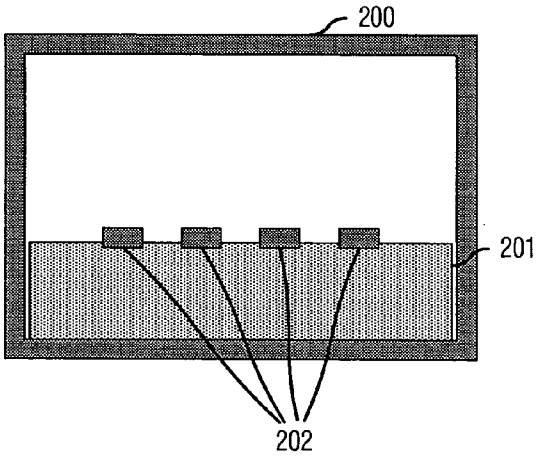

Fig. 3b
(Prior Art)

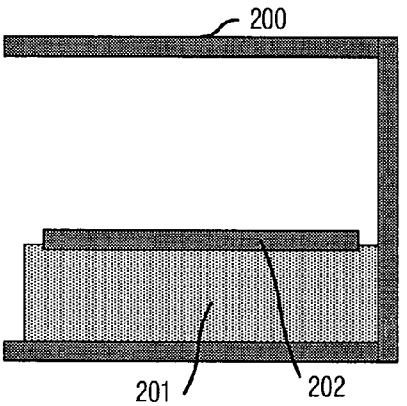

Fig. 3c
(Prior Art)

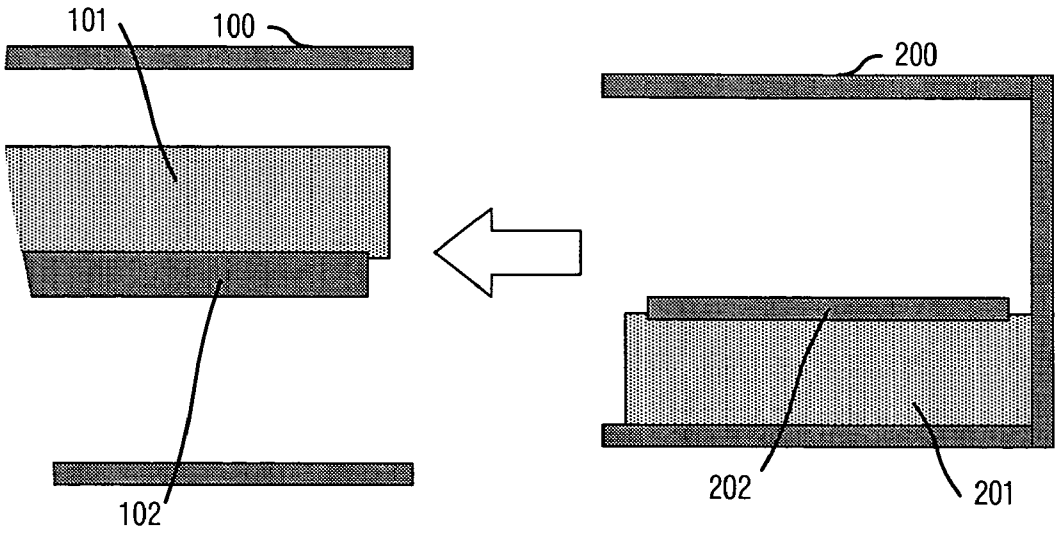

Fig. 4
(Prior Art)

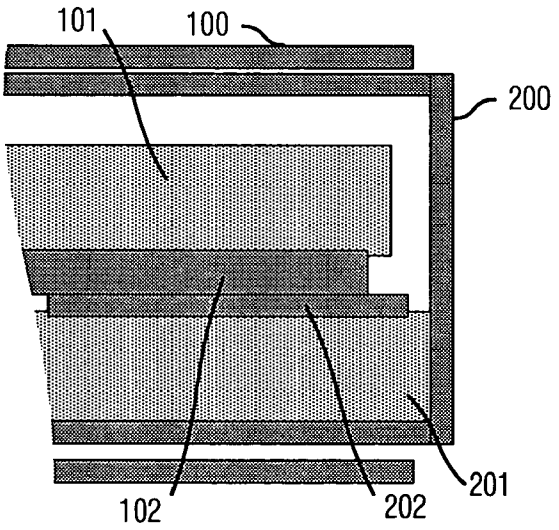

Fig. 5
(Prior Art)

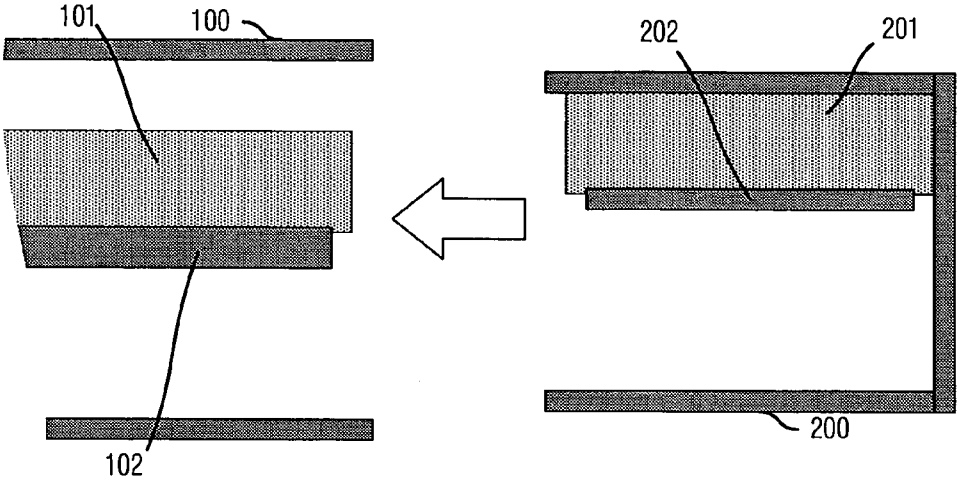

Fig. 6a
(Prior Art)

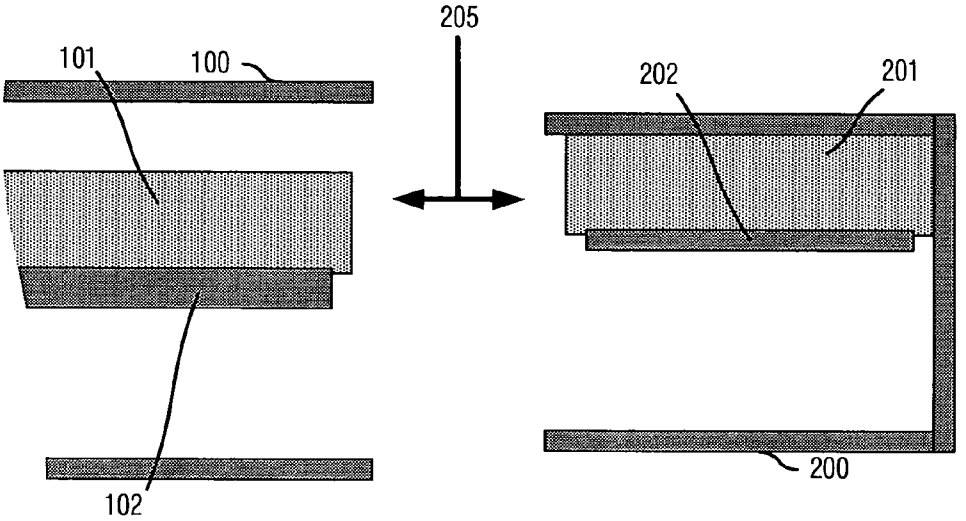

Fig. 6b
(Prior Art)

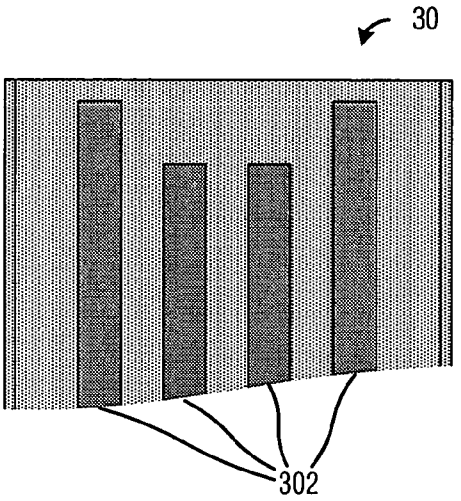

Fig. 7a

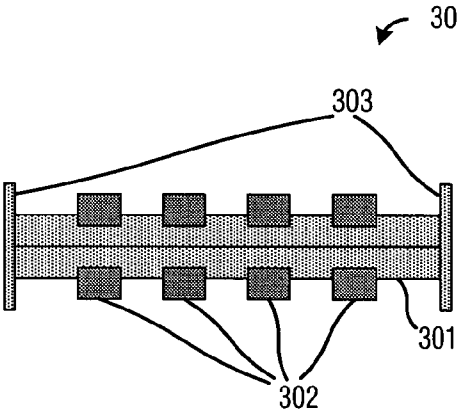

Fig. 7b

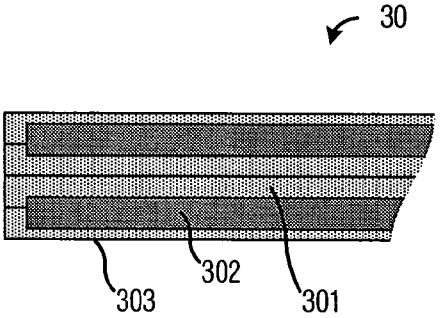

Fig. 7d

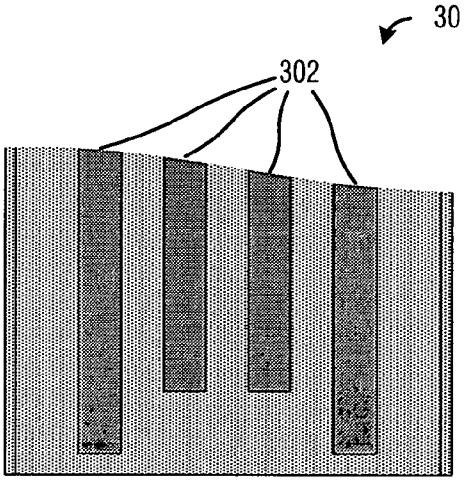

Fig. 7c

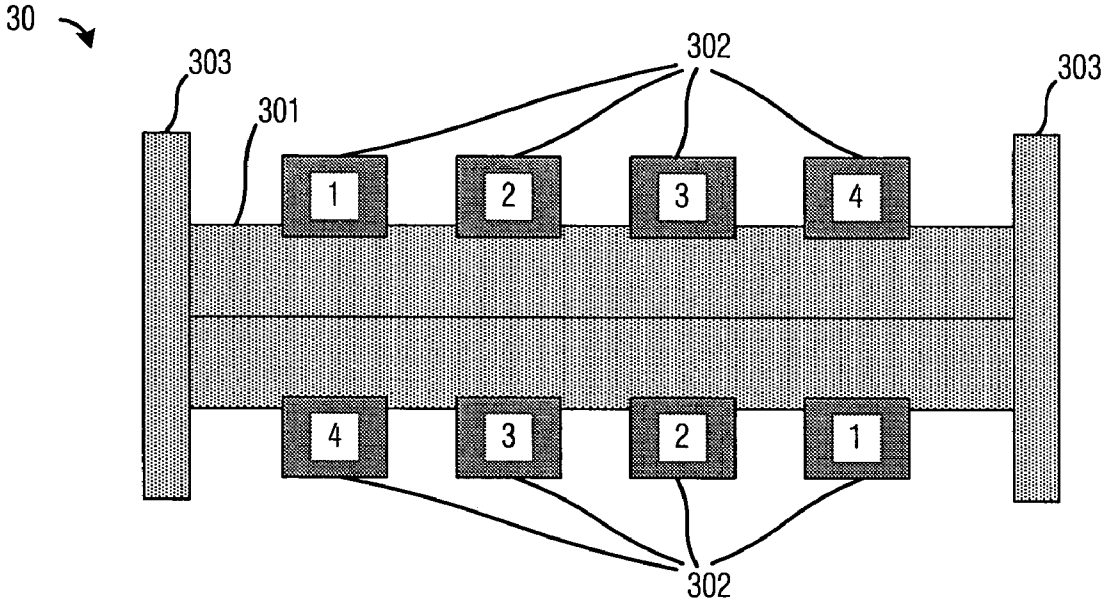

Fig. 8

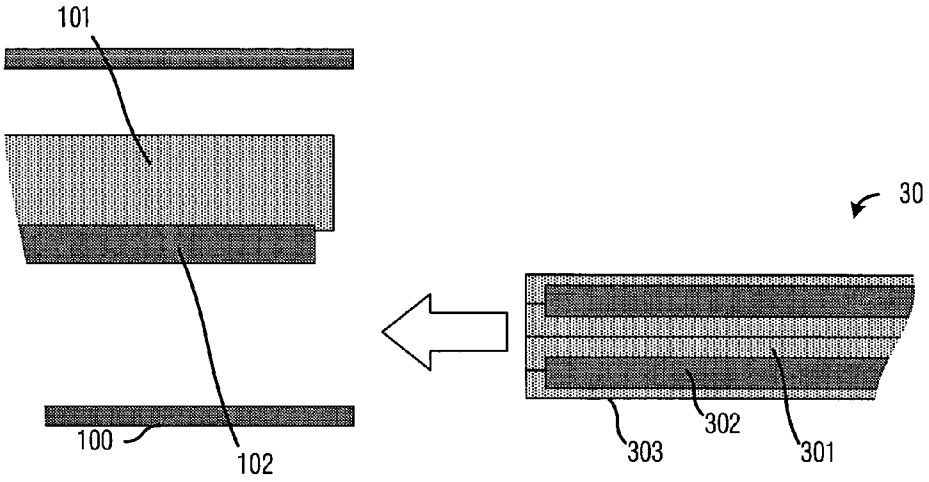

Fig. 9a

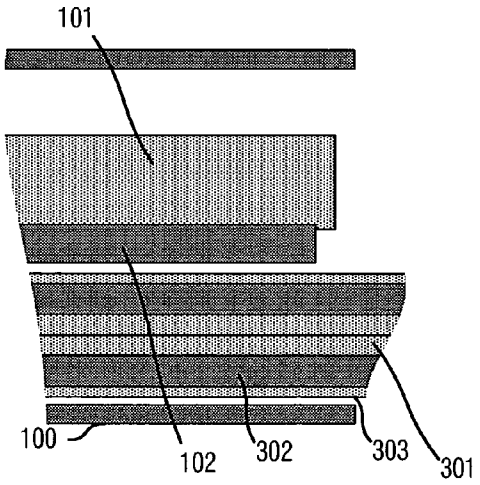

Fig. 9b

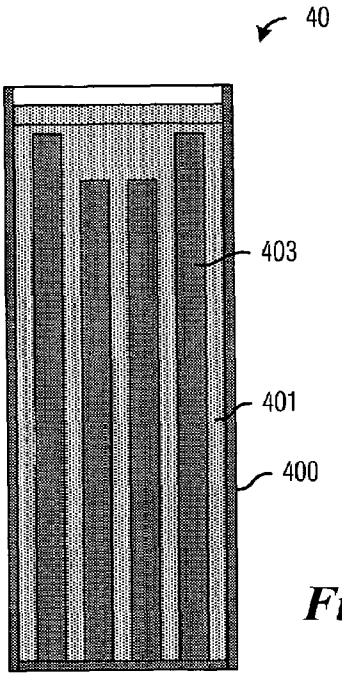

Fig. 10a

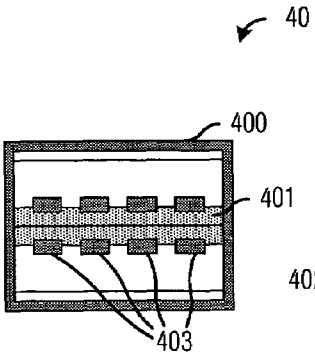

Fig. 10b

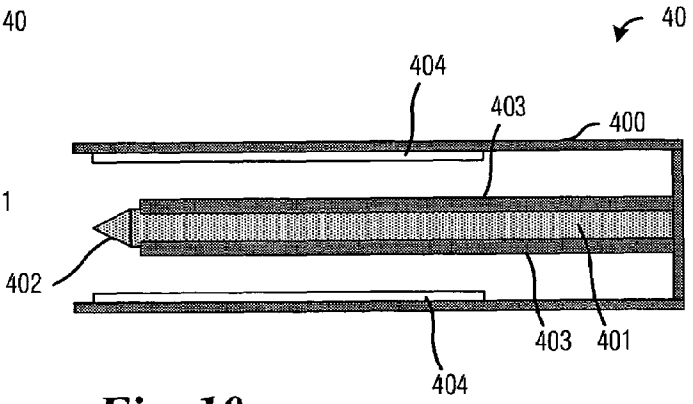

Fig. 10c

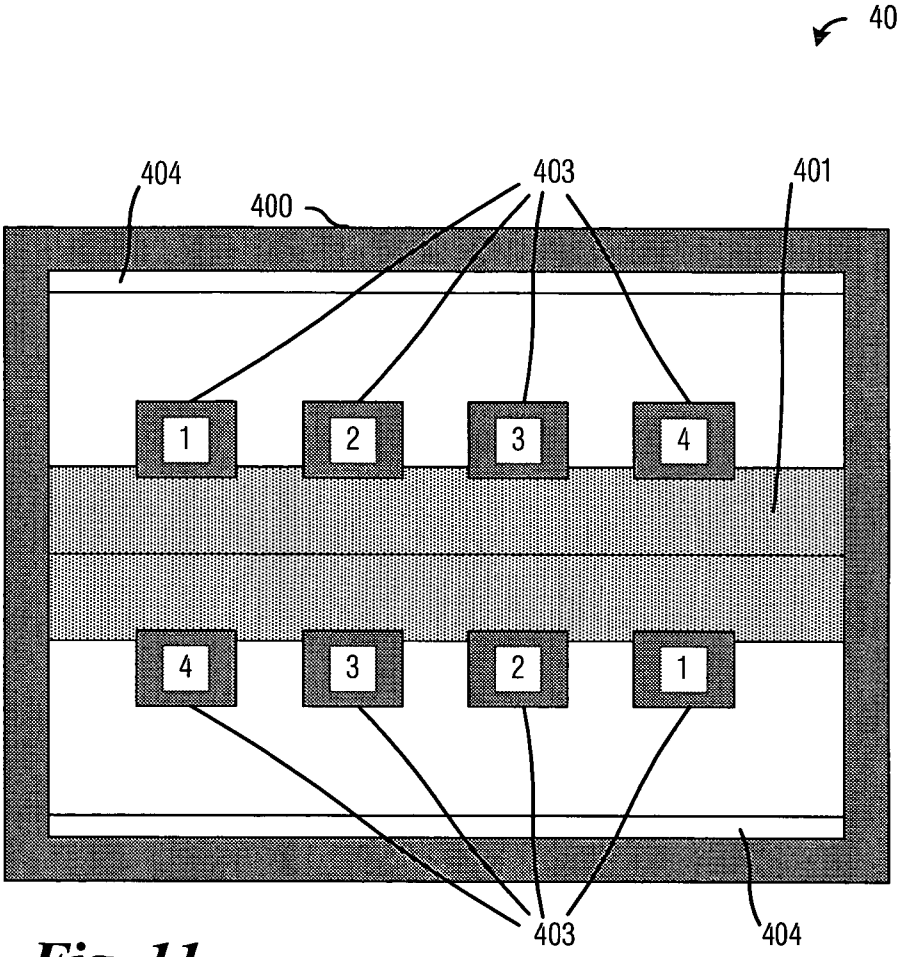

Fig. 11

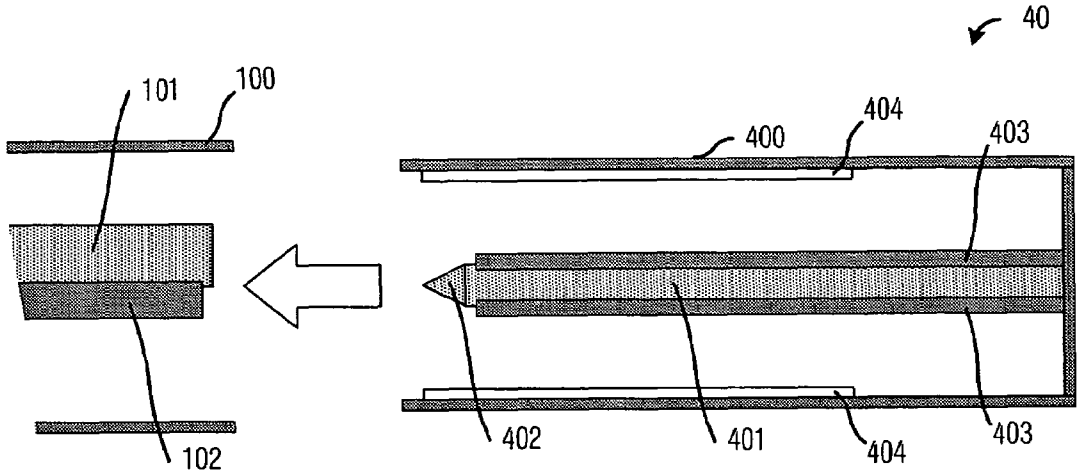

Fig. 12a

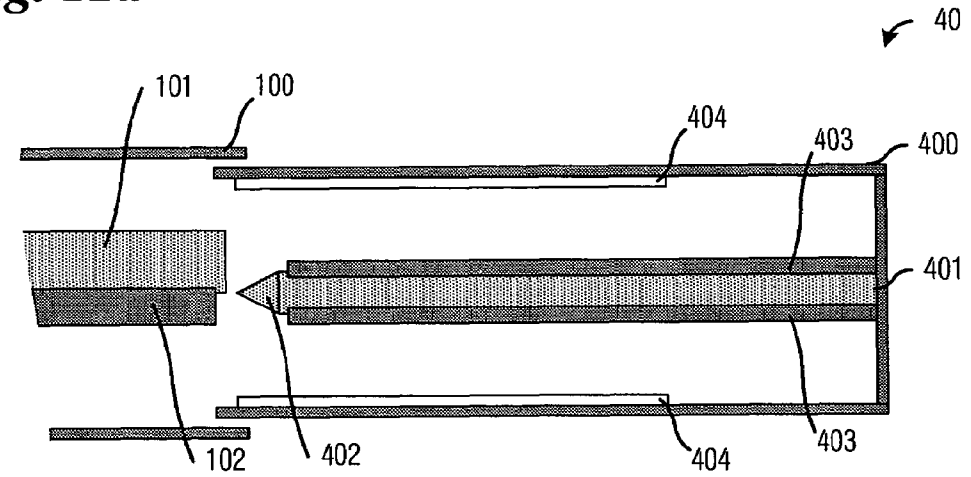

Fig. 12b

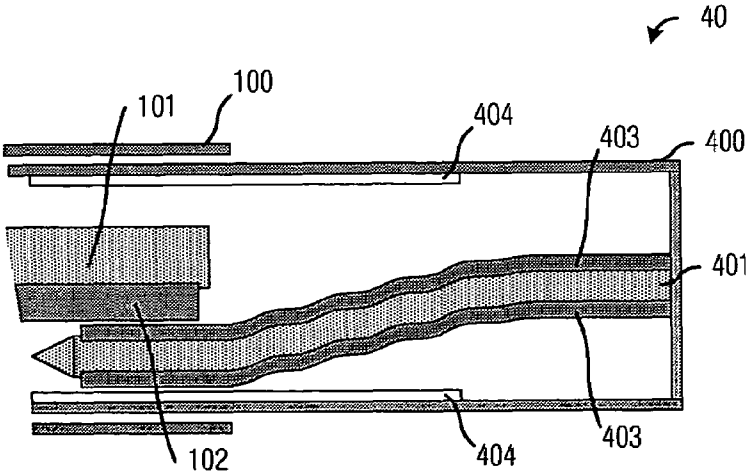

Fig. 12c

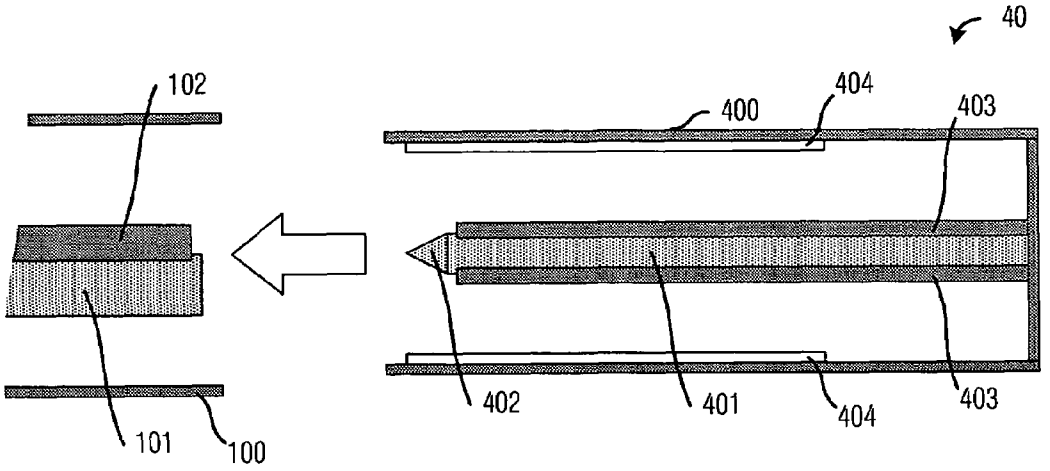

Fig. 13a

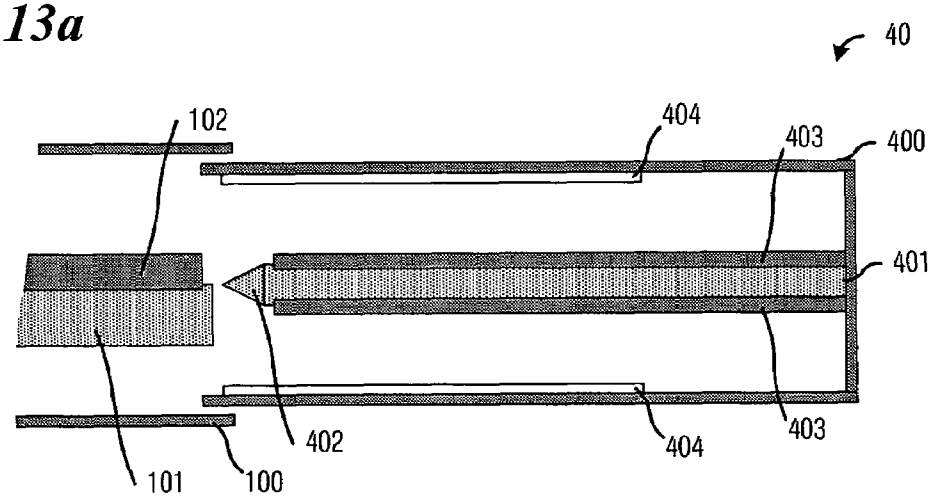

Fig. 13b

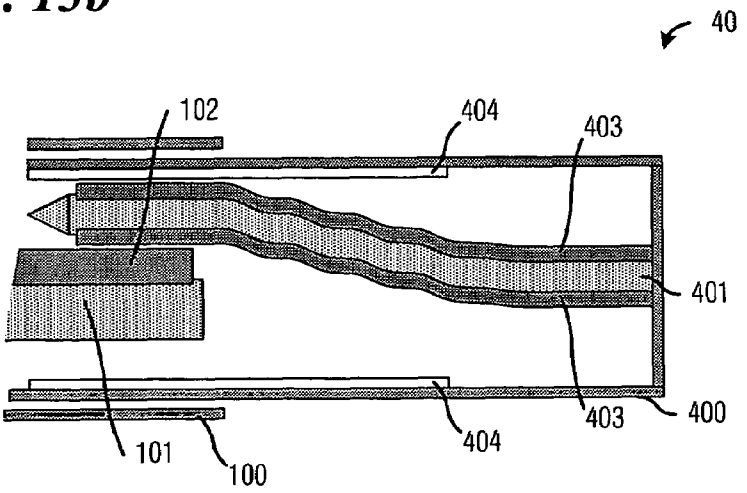

Fig. 13c

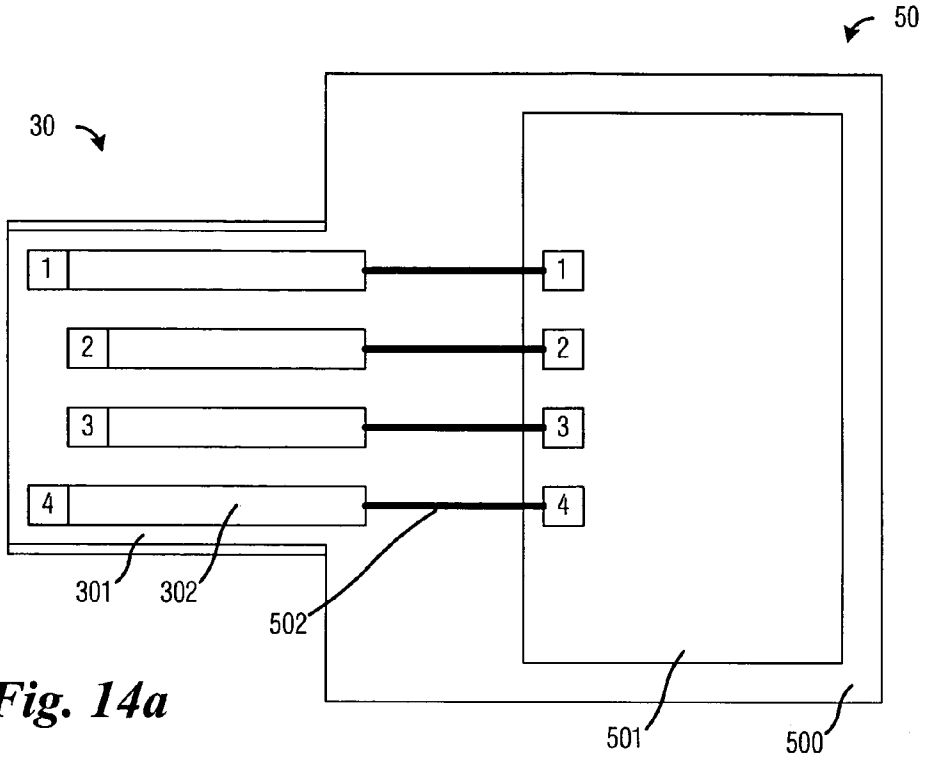

Fig. 14a

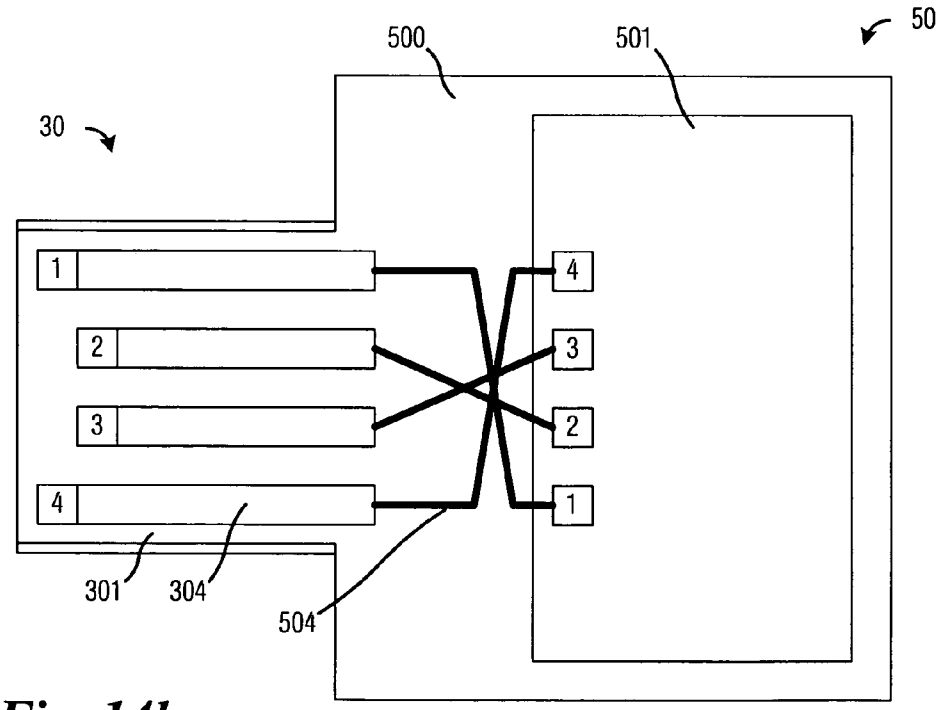

Fig. 14b

ELECTRICAL CONNECTOR

This application claims the benefit of U.S. Provisional Application No. 60/490,413, filed on Jul. 28, 2003, entitled Electrical Connector, which application is hereby incorporated herein by reference.

TECHNICAL FIELD

The present invention relates to an electrical connector, and more particularly to a Universal Serial Bus (USB) connector.

BACKGROUND

In many situations, computers are connected to peripherals or electronic appliances using wire connections. One type of wire connection is the Universal Serial Bus (hereafter USB) cable. A USB cable may be used to electrically connect a computer with peripherals and other electronic appliances. Examples of computer peripherals are input devices such as a mouse and a keyboard, output devices such as printers, and input/output devices such as external hard drives and flash memory drives. Examples of electronic appliances are digital cameras, PDAs, and MP3 players.

In the late 1990's the USB standard became the preferred connection interface in the computer industry and has become ubiquitous in almost all computers manufactured today. Laptop computers, desktop computers, and other computing machines are manufactured with USB ports in order to take advantage of the variety of peripheral devices and electronic appliances that are built around USB architecture. (See www.USB.org)

The Universal Serial Bus and USB connectors are well known in the art. The pervasiveness of the USB standard and USB connectors has increased utility to consumers, substantially increased data transfer rates over other interface methods and reduced costs for manufacturers of peripheral devices due to standardization. Computer vendors typically incorporate one or more USB ports into their suite of Input Output ports.

A USB cable used to connect peripherals or electronic appliances to a computer is comprised of 2 endpoints known as connectors or plugs. One connector, known as Series "A" plug, is attached to the host computer and the other, known as Series "B" plug, is attached to the connecting appliance. Series "A" and Series "B" plugs are of different shape and size so as not to confuse between them. The interface connection on the host computer is called USB mount port (hereafter USB port). The USB port is comprised of a Series "A" receptacle that mates with a Series "A" plug. Electrically, Series "A" receptacles function as outputs from host systems. FIG. **1** shows a prior art Series "A" plug **10**, which mates with a Series "A" receptacle **12**. The Series "A" plug always is oriented towards the host system. Photographs of the plug and connector are shown in the Provisional Application No. 60/490,413, filed Jul. 28. 2003, entitled "Electrical Connector" (hereinafter "the provisional application") which is incorporated herein by reference.

The computer host USB port is an open receptacle with a flat, internal rectangular card bearing electrical contact points. The cable series "A" plug connecting to the host receptacle terminates in a rectangular sleeve that is inserted into the host receptacle. The sleeve contains a tongue board bearing matching electrical contact points to those of the host receptacle. The insertion of sleeve to the receptacle affixes the card and tongue thus creating a mated electrical connection.

Some peripheral devices do not employ a USB cable to connect to a computer but rather utilize a USB connector as part of their assembly. Examples are keychain storage devices (see www.diskonkey.com, www.thumbdrive.com) or security keys (see www.ealaddin.com). The provisional application shows an example of a USB drive plugged into a host PC USB port. Keychain storage devices, due to their small dimensions, serve as portable storage media, and as such are often used with several computers. Therefore, these devices are plugged in and out of host computers many times.

There is unfortunately a shortcoming in the physical design of the USB connector, which manifests itself when a attempting to insert a USB connector into a USB port. Referring again to FIG. **1**, it can be seen that while seeming symmetric to touch and sight externally, both the receptacle **12** and the plug **10** are asymmetric internally. In the host receptacle, this is due to the positioning of the rectangular card **101** and electrical connectors **102** inside the receptacle. FIGS. **2***a*-**2***c* show an example of a USB host receptacle **100**. FIG. **2** depicts three views of a USB receptacle of the prior art. In particular, FIG. **2***a* shows a front section, FIG. **2***b* shows a side view section, and FIG. **2***c* shows a bottom side view section. Referring to these figures, a rectangular card **101** is located within the receptacle **100**. Electric contact points **102** are formed on the card **101**.

FIGS. **3***a*-**3***c* depict an example of a Series "A" USB plug of the prior art. In particular, FIG. **3***a* depicts a top view section, FIG. **3***b* depicts a front view section, and FIG. **3***c* depicts a side view section. The prior art plug connector includes a shell **200**. A tongue board **201** is located within the shell and electric contact poin7ts **202** are formed on the tongue board. Similarly, inside the USB connector shell **200**, the tongue **201** and electrical contacts **202** are positioned in a non-symmetric manner.

In many cases, the host USB port is located at an angle in which users can't comfortably see the inside of the receptacle, and it is unclear to the user how to align the plug for proper insertion and electrical mating. FIGS. **4** and **5** depict mating a USB plug and a USB receptacle of the prior art. The rectangular sleeve of a USB plug fits correctly into the rectangular receptacle **100** of the USB port only when the internal rectangular card **101** of the receptacle and the internal tongue board **201** of the USB plug are correctly facing each other as shown in FIG. **4**. FIG. **5** illustrates the case when the plug is correctly inserted into the receptacle. When this is not the case, an electric mating is not possible as the internal rectangular card **101** of the receptacle and the internal tongue board **201** of the USB connector collide as shown in FIGS. **6***a* and **6***b*, also prior art. FIG. **6***a* shows a view similar to that of FIG. **5** except that the receptacle **100** and shell **200** are not properly aligned. FIG. **6***b* shows the collision **205** that results from this misalignment.

In some cases, users may not see the internal alignment in the host USB receptacle because it is positioned in the back or on the side of the computer. Statistically, since there are seemingly two alignment possibilities when connecting the rectangular plug to the rectangular receptacle, but only one correct alignment, there is a 50% chance of failed insertion attempts. The result is a degradation of the user experience in working with USB devices. As more devices connect to computers using USB connectors, this problem intensifies. For keychain storage devices that are plugged many times in and out of many computers, this inconvenience intensifies.

There is clearly an unmet need for a plug mechanism that is operable with the USB that allows correct insertion of the plug into a USB port without necessitating user consideration of plug alignment.

SUMMARY OF THE INVENTION

In one aspect, the present invention provides a solution to the problem stated above and describes improvements of the USB plug. In one exemplary embodiment (hereafter SLIM embodiment), the connector tongue board is not housed in a shell. The tongue board, which has two sets of contact points, one on each side of the tongue board, may be correctly inserted into host receptacle in two alignments. Since the contact points are present on both sides of the tongue board, any alignment will provide proper electrical mating.

In another exemplary embodiment of the invention (hereafter FLEX embodiment), the solution is achieved by using a flexible tongue board that can position itself according to the computer receptacle's rectangular card position, thus achieving electrical mating in every insertion. Here too, exist two sets of contact points, one on each side of the flexible tongue board.

In order to reduce manufacturing and assembly costs, yet another exemplary embodiment is presented in which the novel connector which is operable with the USB receptacle is part of the Printed Circuit Board (PCB) of the peripheral device.

The foregoing has outlined rather broadly the features and technical advantages of embodiments of the present invention in order that the detailed description of the invention that follows may be better understood. Additional features and advantages of embodiments of the invention will be described hereinafter, which form the subject of the claims of the invention. It should be appreciated by those skilled in the art that the conception and specific embodiments disclosed may be readily utilized as a basis for modifying or designing other structures or processes for carrying out the same purposes of the present invention. It should also be realized by those skilled in the art that such equivalent constructions do not depart from the spirit and scope of the invention as set forth in the appended claims and that such equivalent constructions fall within the scope of the appended claims.

BRIEF DESCRIPTION OF THE DRAWINGS

For a more complete understanding of the present invention, and the advantages thereof, reference is now made to the following descriptions taken in conjunction with the accompanying drawings, in which:

FIG. **1** depicts a series "A" USB plug on a USB cable and a series "A" USB receptacle of the prior art;

FIGS. **2***a*-**2***c* depict various views of a prior art USB receptacle;

FIGS. **3***a*-**3***c* depict various views of a prior art USB plug;

FIG. **4** depicts the proper alignment of a prior art USB plug inserted into a host USB receptacle;

FIG. **5** depicts the combination of a properly inserted USB plug and a USB receptacle of the prior art mated in correct alignment;

FIGS. **6***a*-**6***b* illustrate an improper attempt to insert a USB plug of the prior art into a host USB receptacle;

FIG. **7** is a schematic diagram of an exemplary SLIM embodiment of the present invention, in **4** views **7***a*-**7***d*;

FIG. **8** is a schematic diagram of an exemplary SLIM embodiment of the present invention in a side view, including the layout of the electrical contact points of present embodiment of the invention;

FIGS. **9***a*-*b* illustrate the insertion of an exemplary SLIM embodiment of the present invention into a host USB port;

FIG. **10** is a schematic diagram of an exemplary FLEX embodiment of the present invention, in 3 views **10***a*-**10***c*;

FIG. **11** is a schematic diagram of an exemplary FLEX embodiment of the present invention in a side view, including layout of the electrical contact points of the present embodiment of the invention;

FIGS. **12***a*-*c* illustrate the insertion of an exemplary FLEX embodiment of the present invention into a host USB port;

FIGS. **13***a*-*c* are another illustration of the insertion of a FLEX embodiment of the present invention into a host USB port; and

FIGS. **14***a*-*b* are schematic diagrams of another embodiment of the present invention, in which the USB connector of the invention is an integral part of the peripheral device PCB.

Corresponding numerals and symbols in the different figures generally refer to corresponding parts unless otherwise indicated. The figures are drawn to clearly illustrate the relevant aspects of the preferred embodiments and are not necessarily drawn to scale.

DETAILED DESCRIPTION OF ILLUSTRATIVE EMBODIMENTS

The making and using of the presently preferred embodiments are discussed in detail below. It should be appreciated, however, that the present invention provides many applicable inventive concepts that can be embodied in a wide variety of specific contexts. The specific embodiments discussed are merely illustrative of specific ways to make and use the invention, and do not limit the scope of the invention.

In the following detailed description of exemplary embodiments of the invention, reference is made to the drawings that illustrate specific exemplary embodiments in which the invention may be practiced. Those skilled in the art will appreciate that other embodiments may be utilized without departing from the spirit of the present invention; therefore the following detailed description of the invention should not be taken in a limiting sense.

The preferred embodiment of the present invention is an improvement of existing USB series "A" plugs. This improvement is achieved by providing electrical contact points on both sides of connector tongue board, thus facilitating the insertion of the improved plug connector for devices operable with the USB into USB host computers.

FIG. **7**, which includes the top view of FIG. **7***a*, the front view of FIG. **7***b*, the bottom view of FIG. **7***c*, and the top side view of FIG. **7***d*, depicts electrical plug **30** in accordance with one embodiment of the present invention (SLIM embodiment). The plug **30** includes a tongue **301**, a plurality of contacts **302** on both sides of tongue **301**, and protective edges **303**. The tongue **301** may be the endpoint of a USB cable, or an integral part of a peripheral device, such as a keychain storage device.

FIGS. **9***a* and **9***b* depict an attempt to connect plug **30** to a USB receptacle **100**. The physical structure of plug **30** is symmetric on the lateral axis. When the tongue **301** encounters USB receptacle **100**, tongue **301** takes up the free space available in receptacle **100**, and creates an electric connection.

Electric contacts **302** are present on both sides of tongue **301**. This ensures that insertion of tongue **301** into receptacle **100** in either of two possible alignments will produce proper electrical mating. In order to assure that each of electrical contact points **302** are mated with the correct electrical contact points **102** in USB port **1**, regardless of original alignment of tongue **301**, the electrical contact points on each side of tongue **301** are oppositely aligned, as shown in FIG. **8**.

In FIG. **8**, the electric contact points **302** are each labeled with a number **1**, **2**, **3**, or **4**. In the preferred embodiment, the contact points carry electrical signals as defined by Table 1.

TABLE 1

Contact Point	Signal Line
1	GND
2	Signal A
3	Signal B
4	VCC

In some instances, USB receptacle **100** may serve as common electrical ground. In order to avoid short-circuiting the electrical contact points **302** on the opposite side of tongue **301** that are not participating in the electrical mating, protective edges **303** are used. The protective edges **303** protrude from tongue **301** a little more than the electrical contacts **302** do, and thus prevent physical connection to housing **100** that might otherwise cause a short circuit.

FIGS. **10***a* (top view), **10***b* (front view), and **10***c* (side view) show an electrical plug **40** in accordance with another embodiment of the present invention (FLEX embodiment). The plug **40** includes a shell **400**, a flexible tongue **401**, a tongue tip **402**, a plurality of contacts **403** on both sides of flexible tongue **401**, and insulating strips **404**. The flexible tongue **401** is positioned inside shell **400**, in the center of the lateral axis of shell **400**.

FIGS. **12***a*-**12***c* depict an attempt to connect plug **40** to a USB receptacle **100**. FIG. **12***a* shows the plug **40** before mating. FIG. **12***b* shows alignment of the flexible tongue **401** upon encountering the rectangular card **101**. FIG. **12***c* shows the plug after it has been mated. FIGS. **13***a*-**13***c* are similar views illustrating the same operation, except that the tongue **401** flexes in the opposite direction. The structure of plug **40** is symmetric on the lateral axis, as the tongue board is located in the middle of the shell **400**. When the shell **400** encounters receptacle **100**, tongue tip **402** faces rectangular card **101** and helps to divert flexible tongue **401** and avoid a collision of rectangular card **101** and flexible tongue **401**. As insertion of shell **400** into receptacle **100** continues, flexible tongue **401** takes up the free space available in receptacle **100**, and creates an electric connection.

Electrical contacts **403** are present on both sides of flexible tongue **301** in order to assure not only insertion of plug **40** into USB receptacle **100** but proper electrical mating whether flexible tongue has to move down as shown in FIG. **12** or up as shown in FIG. **13**.

In some USB connectors, shell **400** may serve as common electrical ground. In order to avoid short-circuiting the electrical contact points **403** not participating in the electrical mating, insulation strips **404** are lined inside shell **400**.

In order to ensure that each electrical contact point **402** is mated with the correct electrical contact point **102** in USB port **1**, regardless of original alignment of flexible tongue **401**, the electrical contact points on each side of flexible tongue **301** are oppositely aligned, as shown in FIG. **11**. The signals/supply voltages corresponding to the contact points are shown in Table 1.

FIGS. **14***a* and **14***b* show an example of a SLIM embodiment in which the present invention is used to connect a peripheral device **50** to a USB host computer (not shown) without the use of a cable. The electrical plug **30** is an integral part of the printed circuit board (PCB) **500**. Internal electronics **501** are connected to top electric contact points **302** by using internal electronic contacts **502**. In the top view of FIG. **14***a,* top internal electric contacts **502** are directly connected to top electric contact points **302**. In the bottom view of FIG. **14***b,* electrical plug **30** must maintain same order and positioning of bottom electric contact points **304** relative to top electric contact points **302**. Internal electronics **501**, however, are the same chip (e.g., piece of silicon) both top and bottom. Therefore, bottom internal electric contacts **504** must be crossed to match bottom electric contact points **304**. By reducing the number of parts needed to assemble peripheral device **50**, lower manufacturing costs are achieved.

Although embodiments of the present invention and their advantages have been described in detail, it should be understood that various changes, substitutions and alterations can be made herein without departing from the spirit and scope of the invention as defined by the appended claims. For example, it will be readily understood by those skilled in the art that many of the features, functions, processes, and materials described herein may be varied while remaining within the scope of the present invention. Moreover, the scope of the present application is not intended to be limited to the particular embodiments of the process, machine, manufacture, composition of matter, means, methods and steps described in the specification. As one of ordinary skill in the art will readily appreciate from the disclosure of the present invention, processes, machines, manufacture, compositions of matter, means, methods, or steps, presently existing or later to be developed, that perform substantially the same function or achieve substantially the same result as the corresponding embodiments described herein may be utilized according to the present invention. Accordingly, the appended claims are intended to include within their scope such processes, machines, manufacture, compositions of matter, means, methods, or steps.

What is claimed is:

1. An electrical connector comprising:

a tongue having first and second flat sides bounded by opposing edges;

a first set of one or more electrical contacts located on the first side of the tongue;

a second set of one or more electrical contacts located on the second side of the tongue, each of said second set of electrical contacts being electrically connected with a respective one of the first set of electrical contacts and being positioned electrically and physically in reverse symmetry with the first set of contacts;

whereby the electrical connector will electrically and physically mate to a corresponding receptacle when inserted into the receptacle, irrespective of whether the first or second side is oriented to mate with a set of contacts of the receptacle, and

protectors extending outward from each of the first and second sides of the tongue along the opposite edges of the tongue and terminating a distance beyond the electrical contacts carried by the first and second sides,

whereby the electrical contacts are prevented from physically contacting a housing of the corresponding receptacle.

2. The electrical connector of claim **1** wherein the first and second set of electrical contacts are configured for conducting data signals and ground and supply voltages which comply with a universal serial bus (USB) standard.

3. The electrical connector of claim **1** wherein the electrical connector mates with a USB standard "A type" compliant receptacle.

4. A connector for connecting to a receptacle which complies with a USB standard interface, comprising:

an extension member carrying electrical contacts comprising a first set of electrical contacts on one side and a second set of electrical contacts on an opposite side, the first set of electrical contacts each carrying a respective one of data signals and voltages required for interfacing with a USB standard "A type" compliant receptacle, each of the second set of electrical contacts being electrically connected with a respective one of the first set of electrical contacts and being positioned in a manner to cause the second set of contacts to have a reverse electrical and physical symmetry with respect to the first set of electrical contacts, thereby to electrically and physically mate with contacts of the receptacle irrespective of whether the first or second set of contacts is oriented to mate with a set of contacts of the receptacle, and

protectors extending outward from each of the sides of the tongue along edges of the tongue between which the contacts are positioned, the protectors terminating a distance beyond the electrical contacts carried by the sides, whereby the electrical contacts are protected.

5. A connector for connecting to a receptacle which complies with a USB standard interface, comprising:

an extension member carrying electrical contacts comprising a first set of electrical contacts on one side and a second set of electrical contacts on an opposite side, the first set of electrical contacts each carrying a respective one of data signals and voltages required for interfacing with a USB standard "A type" compliant receptacle, each of the second set of electrical contacts being associated with a respective one of the first set of electrical contacts and being positioned in reverse symmetry with respect to the first set of electrical contacts, wherein

the first set of electrical contacts is placed in an order starting from one edge of the connector of a ground voltage, a first signal A, a second signal B, and a positive supply voltage; and

the second set of electrical contacts is placed in a reverse order starting from said one edge of the connector of the positive supply voltage, the second signal B, the first signal A, and the ground voltage;

whereby the signals on a top surface of the connector are always in a particular order regardless of which side of the connector is oriented upwards; and

protectors extending outward from each of the sides of the tongue along said one edge and another edge of the tongue between which the contacts are positioned, the outward extent of the protectors terminating a distance beyond the electrical contacts carried by the sides, whereby the electrical contacts are protected.

6. A dual-sided electrical connector for coupling to a USB compliant receptacle, comprising:

support means including first and second sides supporting electrical contacts means for carrying signals and having edges;

first electrical contact means for carrying a first set of signals disposed on the first side of the support means conducting the data signals and voltages required to interface with a USB standard compliant receptacle;

second electrical contact means disposed on the second side of said support means and being electrically connected with said first contact means in a manner that the second contact means have a reverse electrical and physical symmetry from said first contact means between the edges of the support means;

whereby the electrical connector will electrically mate to a USB standard compliant receptacle irrespective of whether the electrical connector is initially oriented in a first possible alignment or a second possible alignment with respect to the USB receptacle; and

protectors extending outward from each of the first and second sides of the support means along edges thereof and terminating a distance beyond the electrical contact means carried by the first and second sides, whereby the electrical contact means are protected.

7. A dual-sided electrical connector for coupling to a USB compliant receptacle comprising:

support means including first and second sides supporting electrical contacts means for carrying signals and having edges;

first electrical contact means for carrying a first set of signals disposed on the first side of the support means conducting the data signals and voltages required to interface with a USB standard compliant receptacle; and

second electrical contact means disposed on the second side of said support means and being associated with said first contact means, said second contact means being positioned in reverse symmetry from said first contact means across respective second and first sides;

whereby the electrical connector will electrically mate to a USB standard compliant receptacle irrespective of whether the electrical connector is initially oriented in a first possible alignment or a second possible alignment with respect to the USB receptacle, and wherein

the first contact means comprises a first set of signals contacts placed in an order starting from one side of the dual-sided electrical connector of a ground voltage, a first signal A, a second signal B, and a positive supply voltage; and

the second contact means comprises a second set of electrical contacts placed in a reverse order starting from the one side of the dual-sided electrical connector of the positive supply voltage, the second signal B, the first signal A, and the ground voltage;

whereby the signals on top surface of the dual-sided electrical connector are always in a particular order regardless of which side of the connector is oriented upwards; and

protectors extending outward from each of the first and second sides of the support means along the edges thereof and terminating a distance beyond the electrical contact means carried by the first and second sides, whereby the electrical contact means are protected.

8. An electrical connector adapted for insertion into a receptacle having a set of contacts positioned across a surface thereof, comprising:

a tongue having first and second surfaces on opposite sides thereof;

a first set of a plurality of electrical contacts located on the first surface of the tongue, extending along its length and being spaced apart across its width;

a second set of a plurality of electrical contacts located on a second surface of the tongue, extending along its length and being spaced apart across its width;

wherein each of said second set of electrical contacts is electrically connected with a respective one of the first set of electrical contacts in a manner to provide the first and second sets of contacts with a reverse electrical symmetry across their widths;

whereby either of the first or second set of the electrical connector contacts are capable of mating with the receptacle contacts when inserted into the receptacle; and

protectors extending outward from each of the first and second sides of the tongue along lengths of edges thereof spaced apart across the width of the tongue, the protectors terminating a distance beyond the electrical contacts carried by the first and second sides, whereby the electrical contacts are protected.

9. The electrical connector of claim **8**, wherein the first and second sets of electrical contacts are configured for conducting data signals and supply voltages which comply with a universal serial bus (USB) standard.

10. An electrical connector adapted for insertion into a receptacle having a set of at least four contacts positioned across a width of a surface thereof in a given pattern, comprising:

a tongue having first and second surfaces on opposite sides thereof; and first and second edges defining a width thereof,

a first plurality of at least first, second, third and fourth electrical contacts in said given pattern that are spaced apart across the width of the first surface of the tongue in a direction from the first edge to the second edge,

a second plurality of at least first, second, third and fourth electrical contacts in said given pattern that are spaced apart across the width of the second surface of the tongue in a direction from the second edge to the first edge,

the first electrical contact on the first tongue surface being electrically connected with the first electrical contact on the second tongue surface, the second electrical contact on the first tongue surface being electrically connected with the second electrical contact on the second tongue surface, the third electrical contact on the first tongue surface being electrically connected with the third electrical contact on the second tongue surface, and the fourth electrical contact on the first tongue surface being electrically connected with the fourth electrical contact on the second tongue surface, and

protectors extending outward from each of the first and second surfaces of the tongue and terminating a distance beyond the electrical contacts carried by the first and second surfaces, whereby the electrical contacts are protected.

11. The electrical connector of claim **10**, wherein the first and second plurality of electrical contacts are configured for conducting data signals and supply voltages which comply with a universal serial bus (USB) standard.

12. The electrical connector of claim **10**, wherein the protectors extend outward from each of the first and second surfaces along the first and second edges of the tongue.

* * * * *