US007359208B2

(12) **United States Patent**
Ni

(10) **Patent No.: US 7,359,208 B2**
(45) **Date of Patent: Apr. 15, 2008**

(54) **USB DEVICE WITH METAL PLUG SHELL ATTACHED TO PLASTIC HOUSING**

(75) Inventor: **Jim Ni**, San Jose, CA (US)

(73) Assignee: **Super Talent Electronics, Inc.**, San Jose, CA (US)

(*) Notice: Subject to any disclaimer, the term of this patent is extended or adjusted under 35 U.S.C. 154(b) by 412 days.

(21) Appl. No.: **11/213,607**

(22) Filed: **Aug. 26, 2005**

(65) **Prior Publication Data**

US 2007/0076382 A1 Apr. 5, 2007

(51) **Int. Cl.**
H05K 7/10 (2006.01)
H05K 7/02 (2006.01)

(52) **U.S. Cl.** **361/752**; 361/737; 361/736; 439/76.1; 439/951; 439/660; 174/50.51; 174/50.52

(58) **Field of Classification Search** 361/728–730, 361/736, 737, 752; 174/50.51–50.53, 520; 439/76.1, 660, 745, 946, 951
See application file for complete search history.

(56) **References Cited**

U.S. PATENT DOCUMENTS

5,400,216 A 3/1995 Tsai
5,941,725 A 8/1999 Brennan et al.
5,941,733 A 8/1999 Lai
6,036,544 A 3/2000 Brunker et al.
6,135,786 A 10/2000 Johnson et al.
6,241,534 B1 6/2001 Neer et al.
6,309,255 B1 10/2001 Yu
6,332,783 B1 12/2001 Ukiya et al.
6,618,243 B1 9/2003 Tirosh
6,671,808 B1 12/2003 Abbott et al.
6,676,419 B1 1/2004 Lin et al.
6,744,634 B2 * 6/2004 Yen 361/752
6,778,401 B1 * 8/2004 Yu et al. 361/752
6,804,749 B2 * 10/2004 Chien et al. 711/115
6,813,164 B2 * 11/2004 Yen 361/785
6,854,984 B1 2/2005 Lee et al.
6,877,994 B2 * 4/2005 Huang 439/76.1
6,944,028 B1 9/2005 Yu et al.
6,948,983 B1 9/2005 Peng
6,999,322 B1 * 2/2006 Lin 361/752
7,004,794 B2 2/2006 Wang et al.
7,035,110 B1 * 4/2006 Wang et al. 361/737
7,044,802 B2 5/2006 Chiou et al.

(Continued)

Primary Examiner—Diego Gutierrez
Assistant Examiner—Dameon E Levi
(74) *Attorney, Agent, or Firm*—Bever, Hoffman & Harms, LLP; Patrick T. Bever

(57) **ABSTRACT**

A Universal-Serial-Bus (USB) device includes a PCBA mounted inside a molded plastic housing structure such that metal contacts are exposed on a plug portion of the housing structure, and includes a metal plug shell attached to the housing structure such that an upper wall of the metal plug shell is spaced from the metal contacts by a predetermined gap distance. A USB controller IC is mounted onto a relatively narrow portion of the PCBA under the metal contacts to reduce overall length of the USB device. The metal plug shell is molded or snap-coupled onto tabs formed on the plug portion of the housing structure. An optional locking collar secures a rear edge of the metal plug shell to the housing structure. An optional rear cover is attached over a rear opening of the housing structure and secures a rear edge of the PCBA.

18 Claims, 12 Drawing Sheets

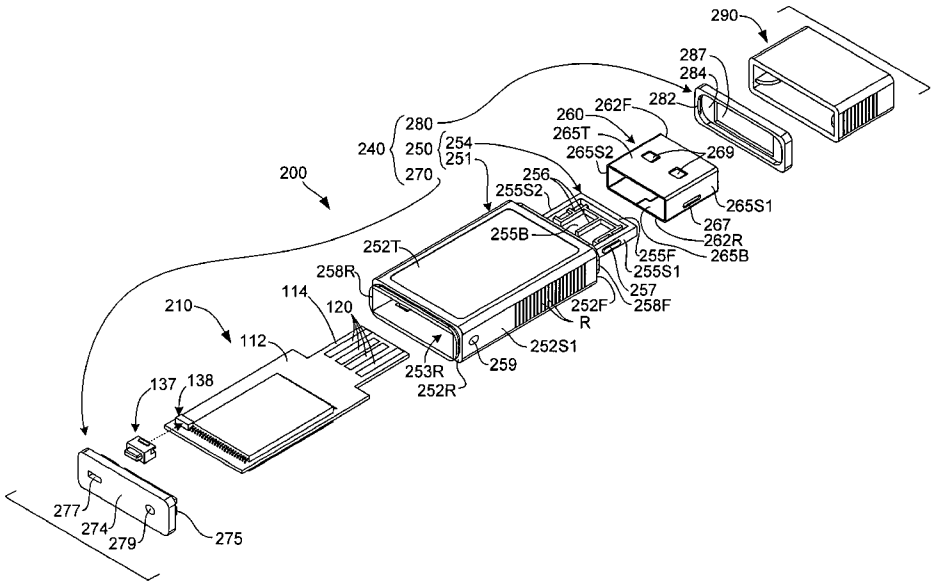

U.S. PATENT DOCUMENTS

7,052,287	B1	5/2006	Ni et al.	
7,068,517	B2 *	6/2006	Yen	361/752
7,074,052	B1 *	7/2006	Ni et al.	439/76.1
7,090,541	B1	8/2006	Ho	
7,095,617	B1 *	8/2006	Ni	361/736
7,165,998	B2 *	1/2007	Lee et al.	439/660
7,172,460	B2 *	2/2007	Zhao et al.	439/607
7,249,978	B1 *	7/2007	Ni	439/660
2003/0100203	A1	5/2003	Yen	
2004/0198079	A1	10/2004	Aronson et al.	
2005/0085129	A1	4/2005	Chiou et al.	

* cited by examiner

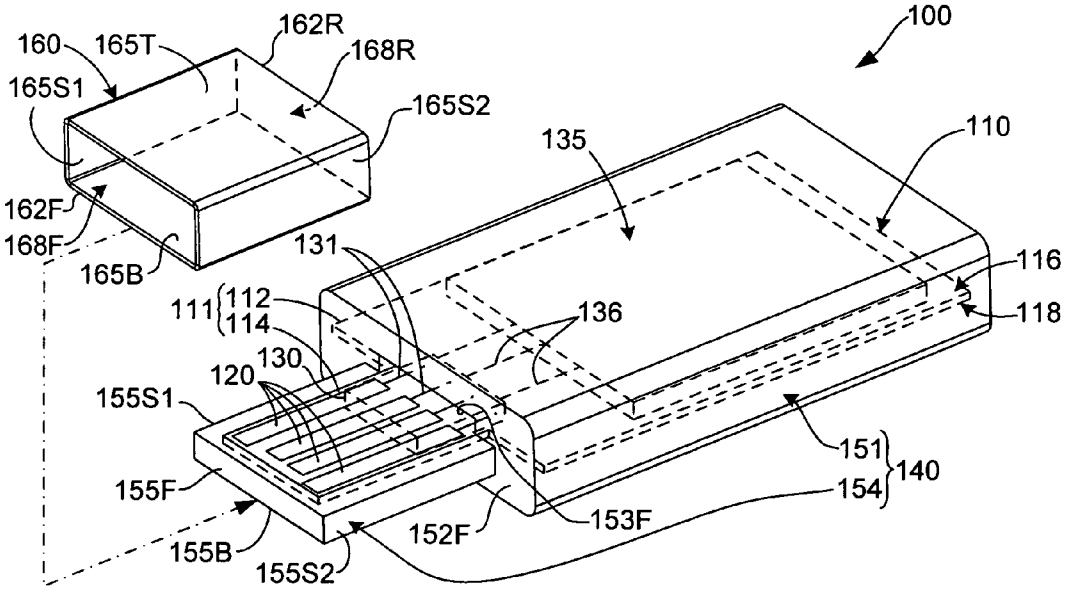
100
160
165T
162R
168R
165S1
165S2
135
110
162F
168F
165B
131
116
111
112
114
136
118
130
120
155S1
151
140
155F
154
153F
152F
155B
155S2

FIG. 1

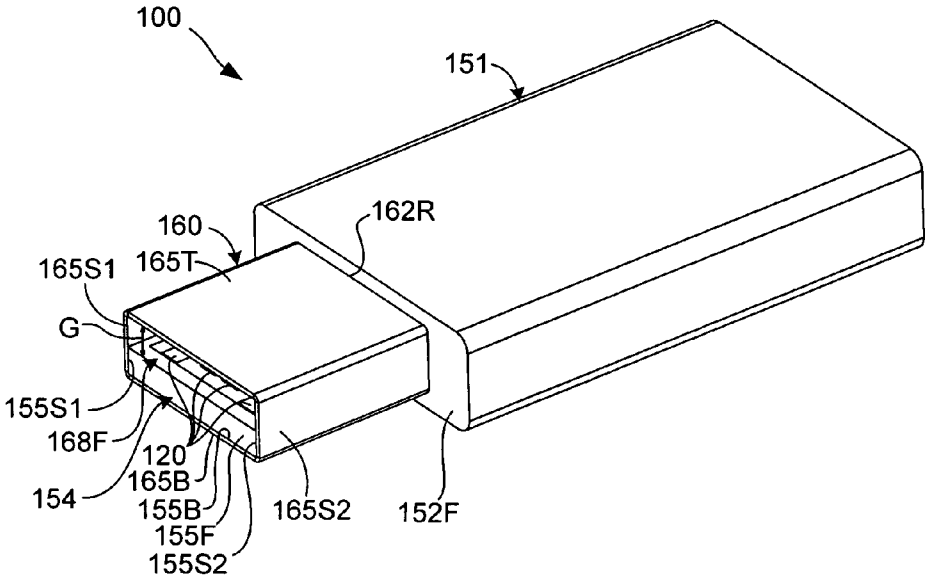
100
151
160
162R
165S1
165T
G
155S1
168F
120
165B
154
155B
165S2
152F
155F
155S2

FIG. 2

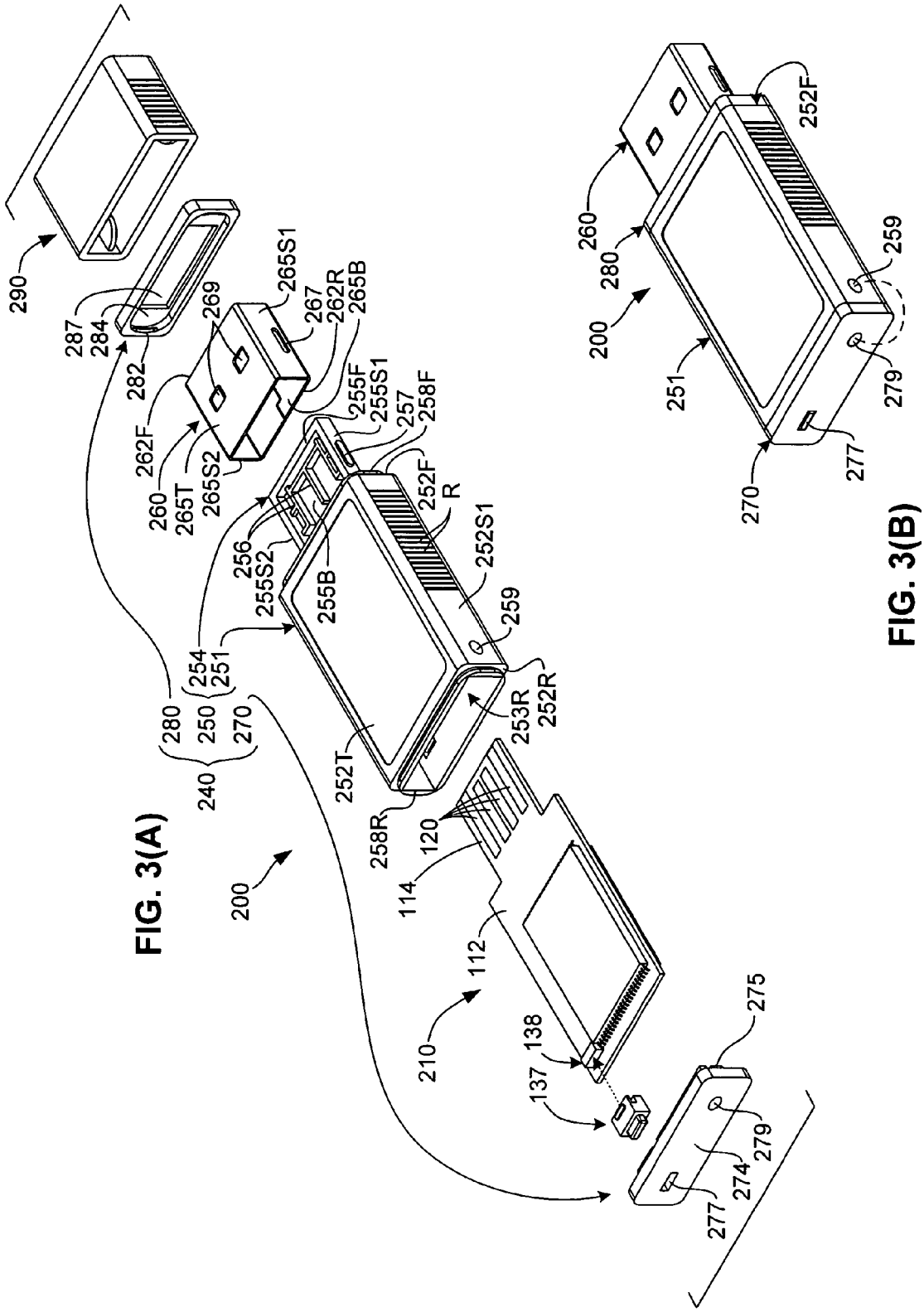
290
287
284
282
269
265S1
267
262R
265B
262F
260
265T
265S2
255F
255S1
257
258F
252F
R
252S1
256
255S2
255B
254
251
280
250
270
240
200
259
252R
253R
252T
258R
120
114
112
210
138
137
275
279
274
277
252F
260
280
200
259
251
279
277
270

FIG. 3(A)

FIG. 3(B)

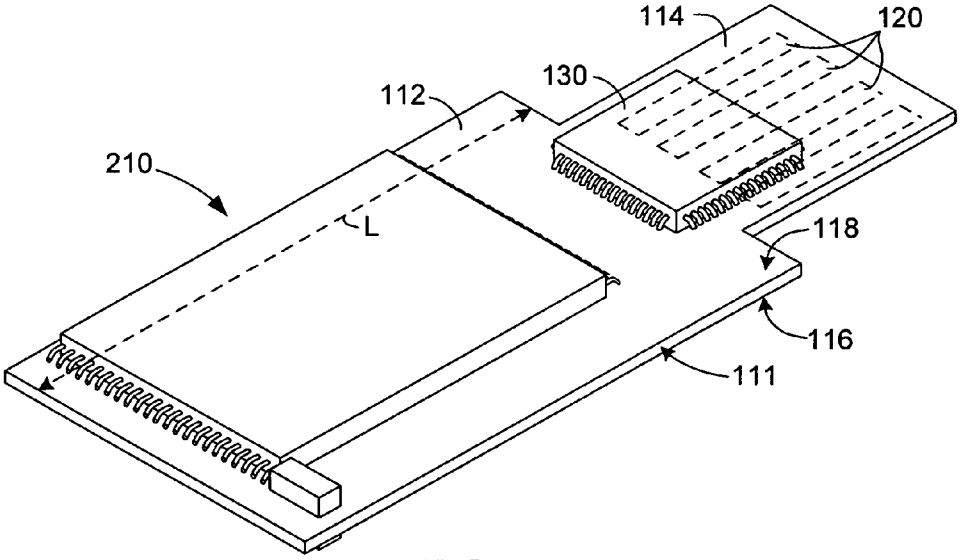

FIG. 4

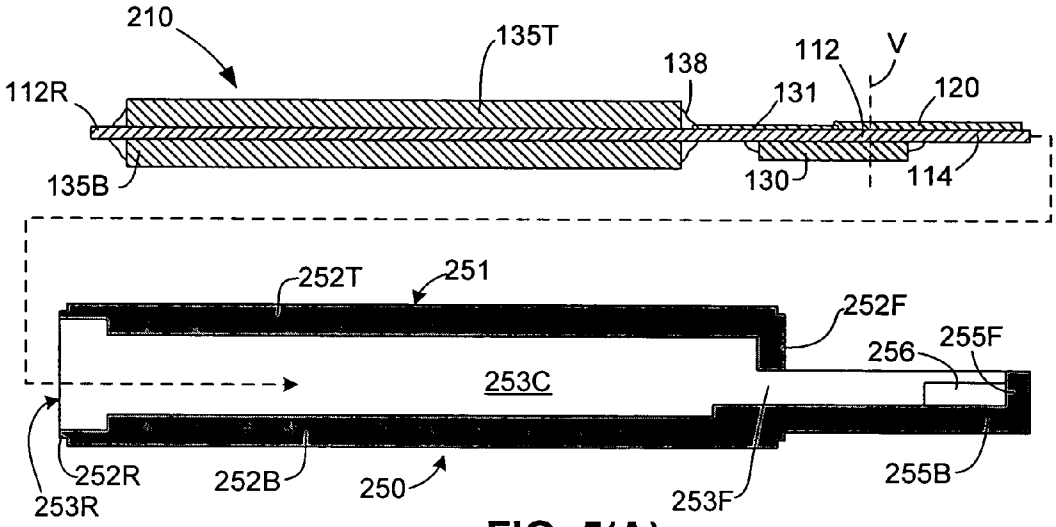

FIG. 5(A)

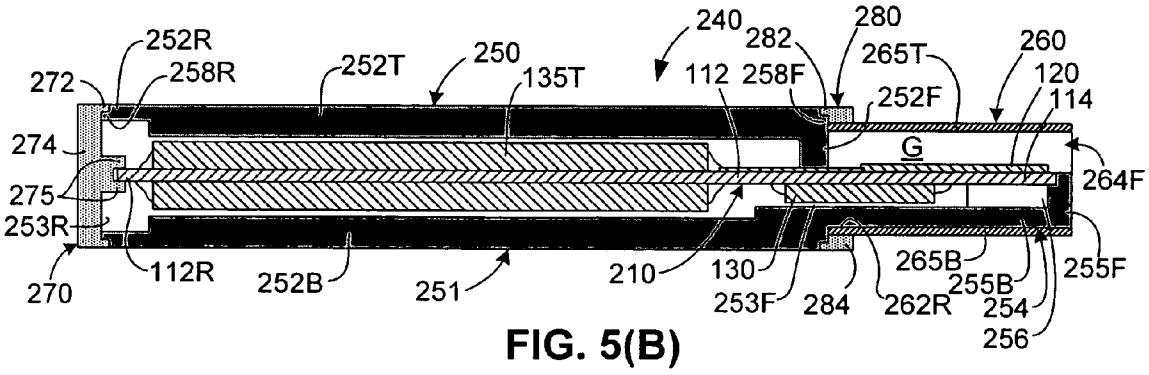

FIG. 5(B)

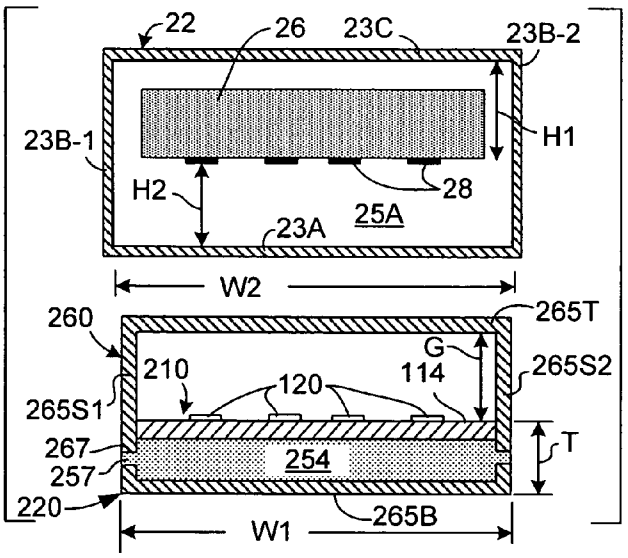

FIG. 6(A)

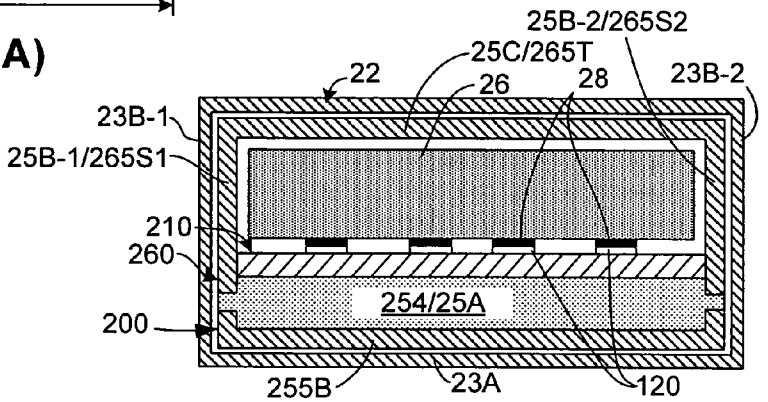

FIG. 6(B)

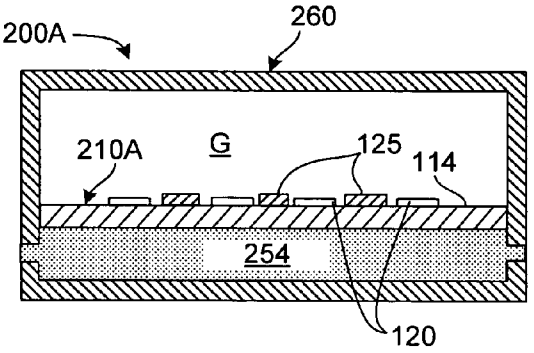

FIG. 7(A)

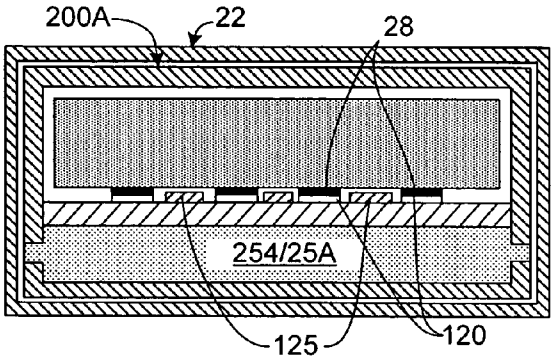

FIG. 7(B)

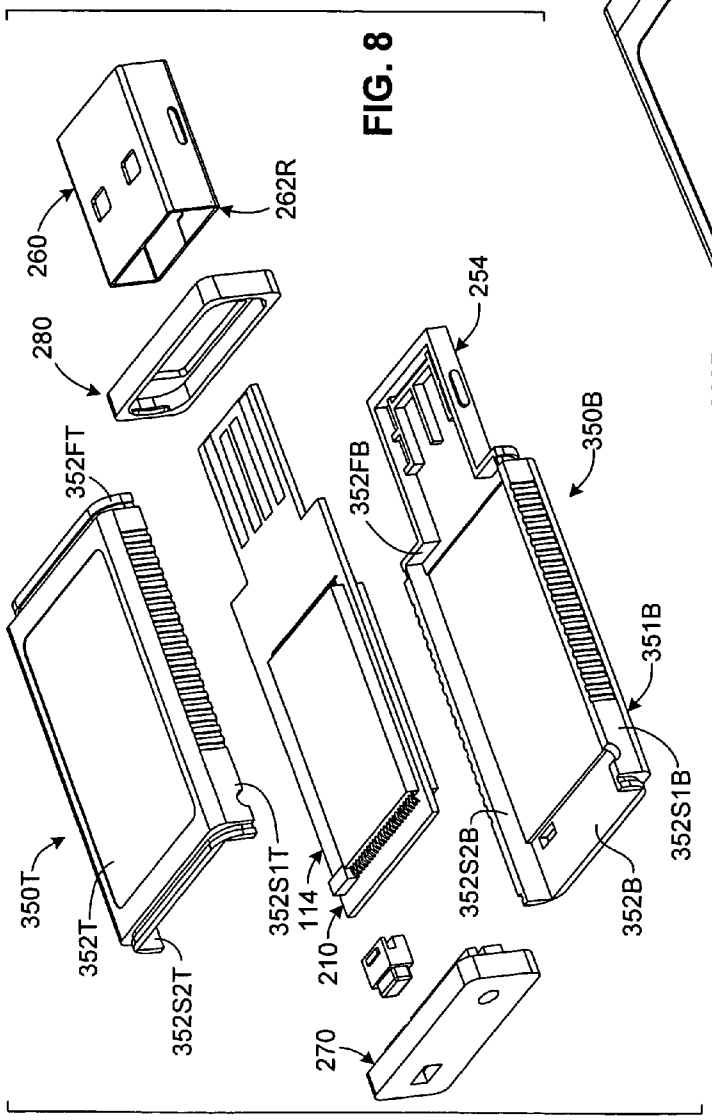
260
262R
280
352FT
350T
352T
352S2T
352S1T
114
210
270
254
352FB
350B
352S2B
352B
351B
352S1B

FIG. 8

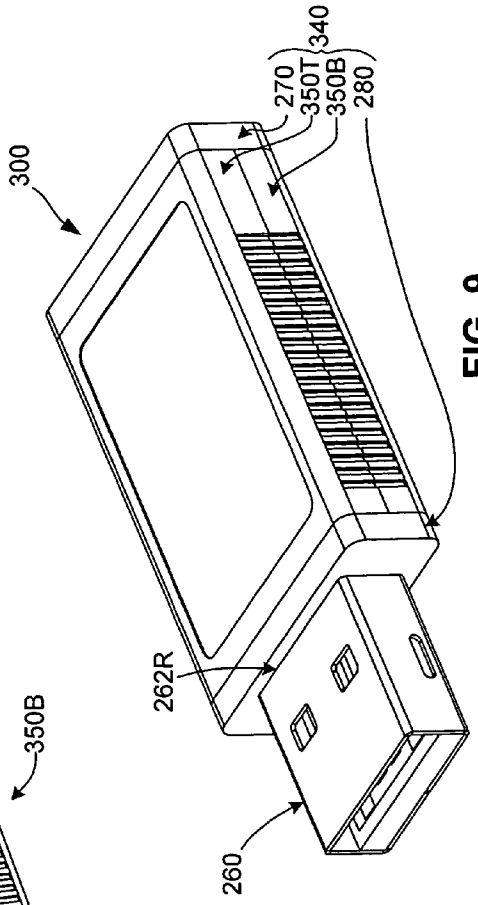
300
270
350T
350B
340
280
262R
260

FIG. 9

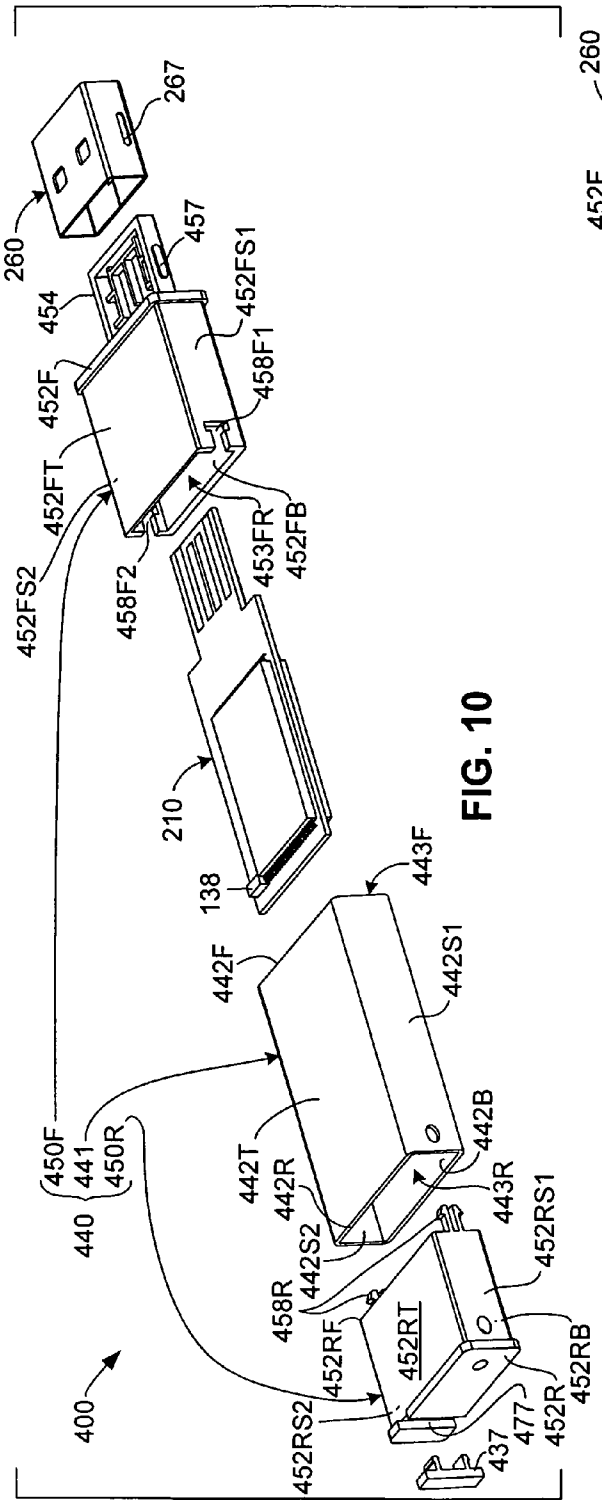

FIG. 10

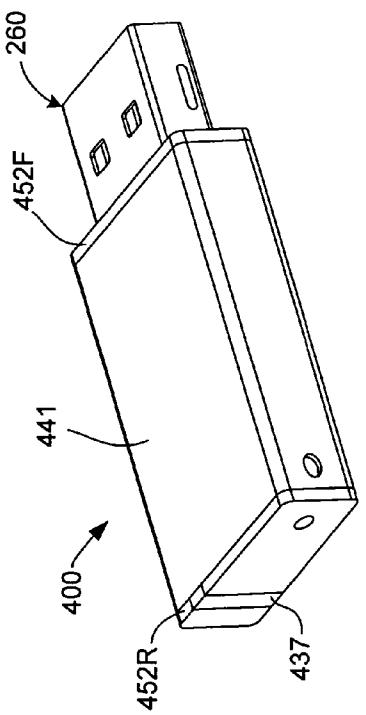

FIG. 12

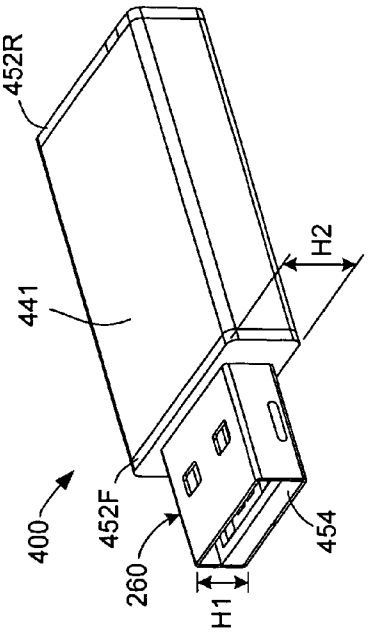

FIG. 11

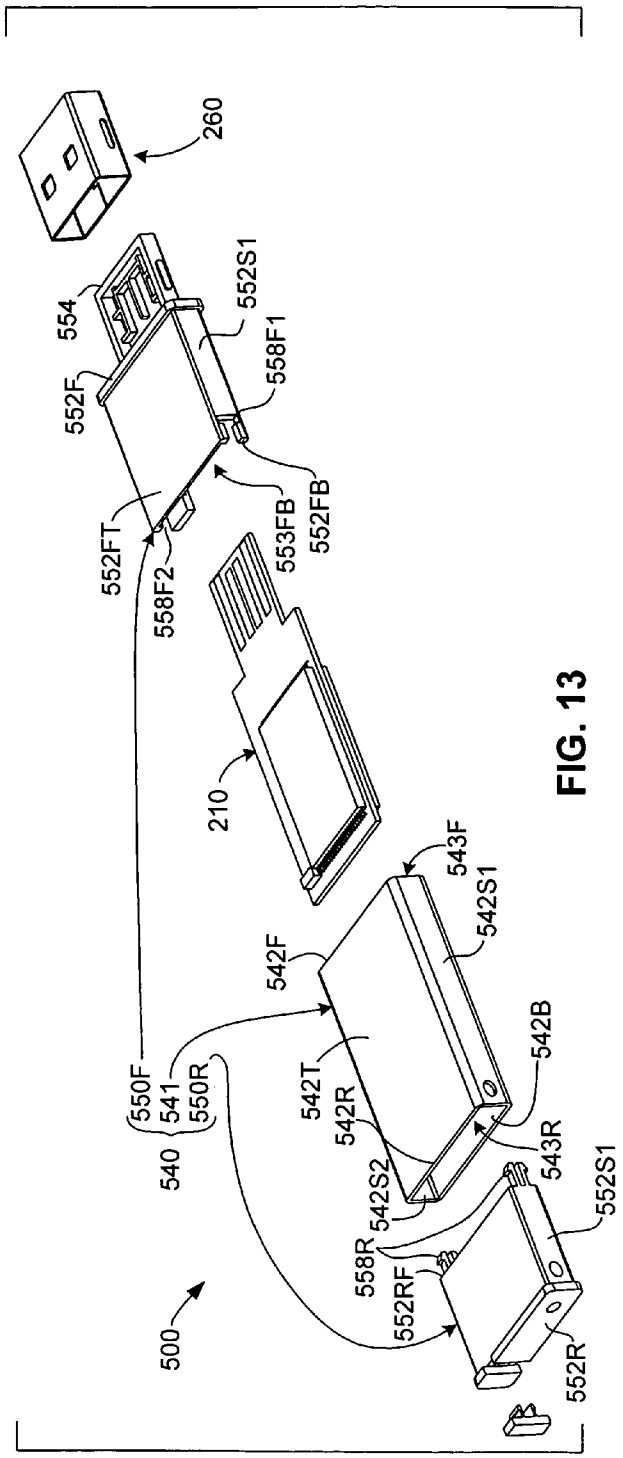

FIG. 13

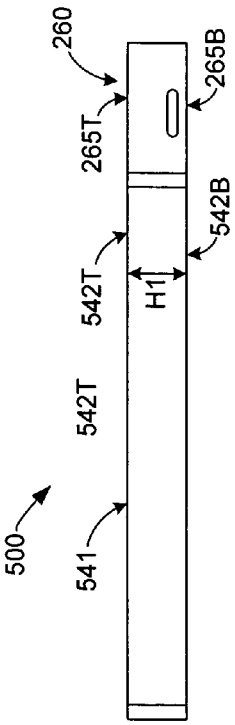

FIG. 15

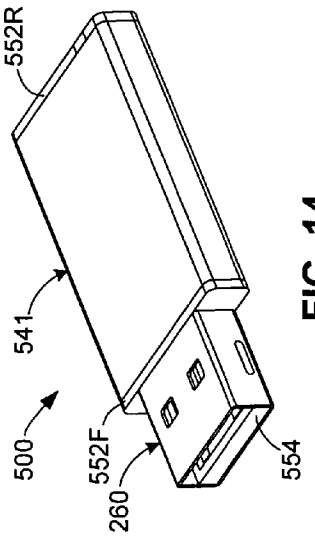

FIG. 14

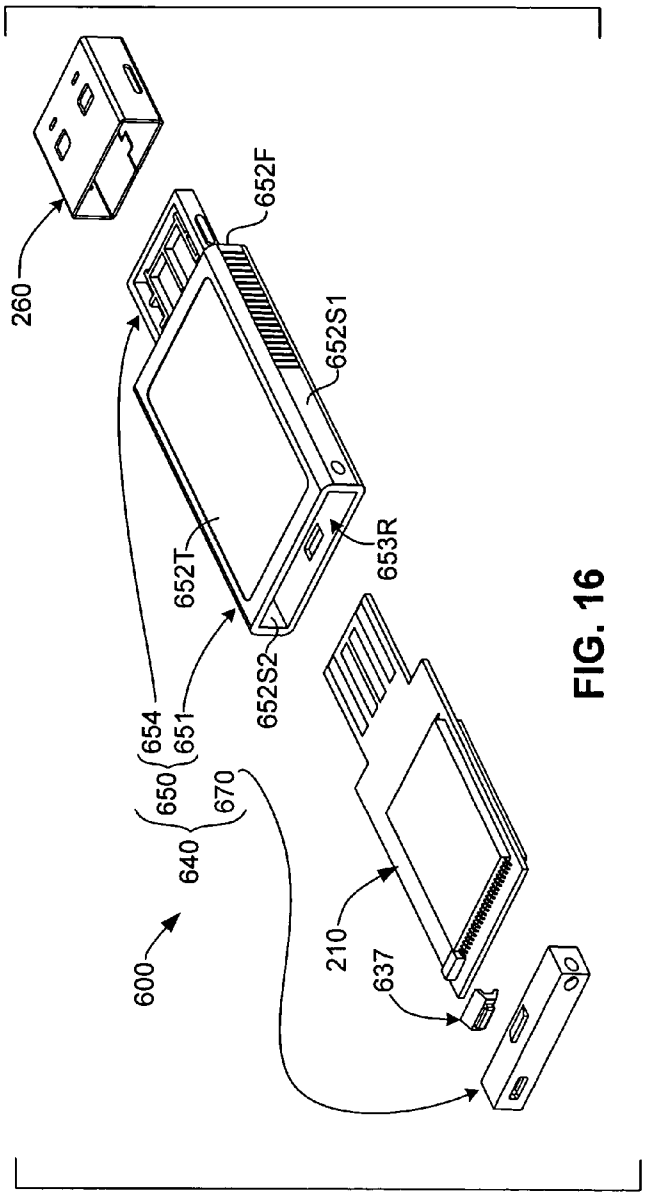

FIG. 16

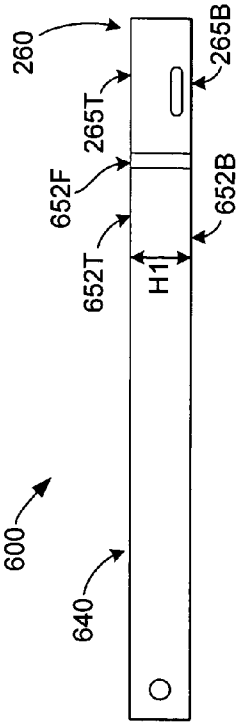

FIG. 18

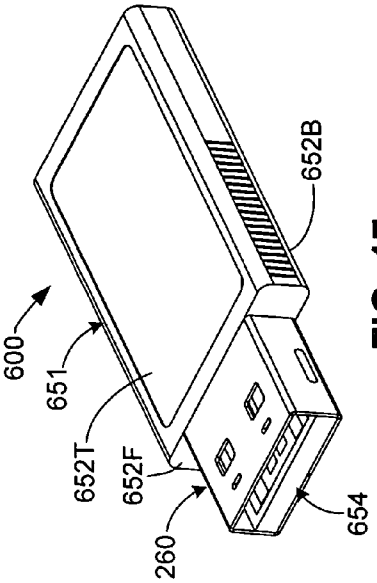

FIG. 17

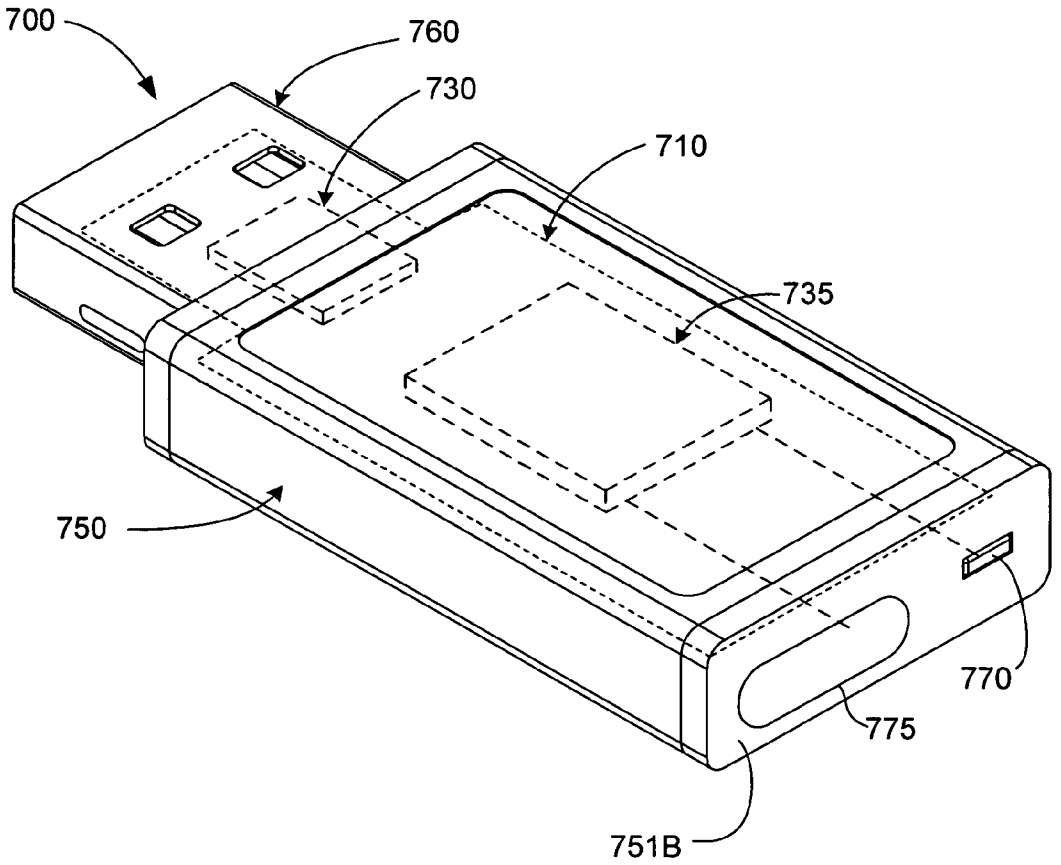

FIG. 19

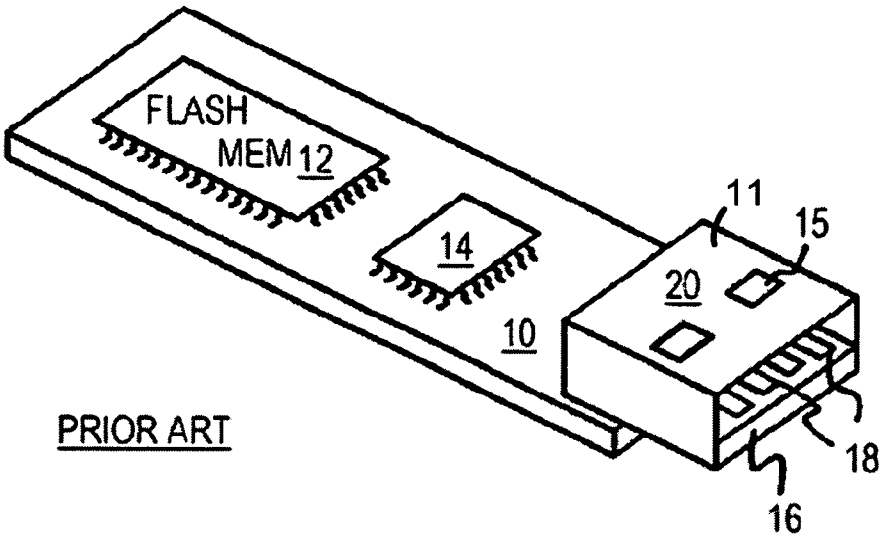

PRIOR ART

FIG. 20(A)

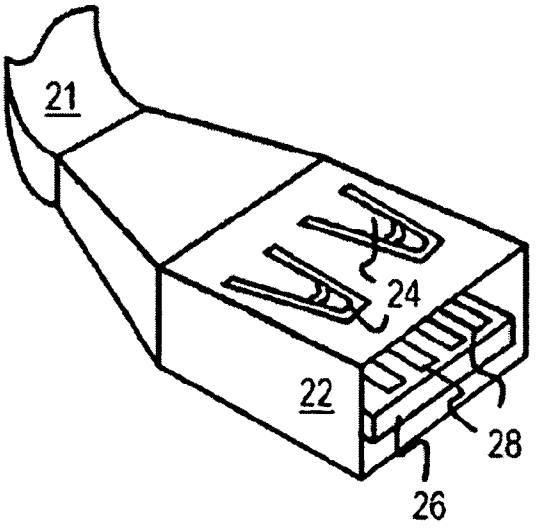

PRIOR ART

FIG. 20(B)

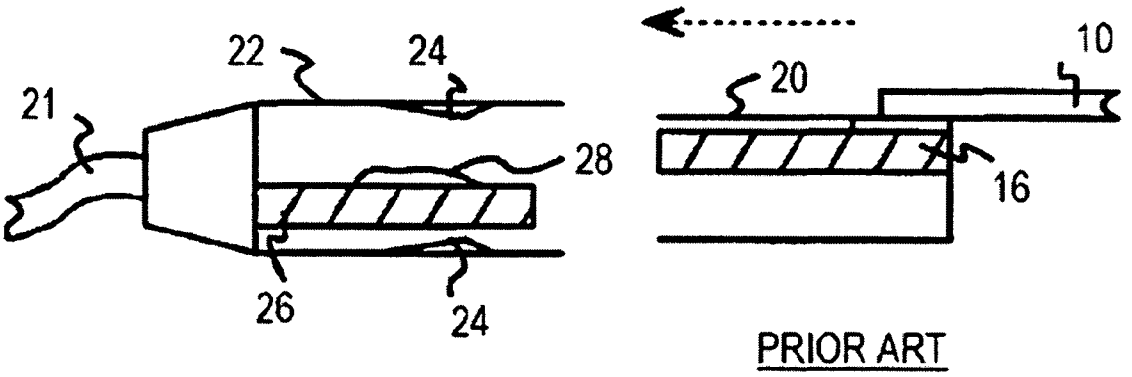

FIG. 21(A)

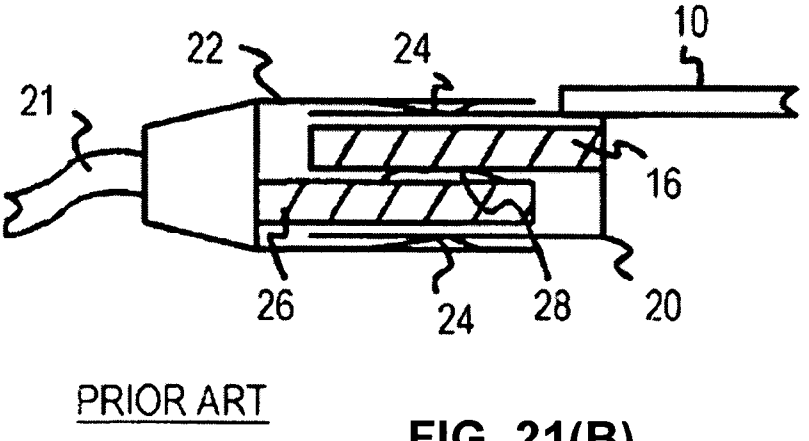

FIG. 21(B)

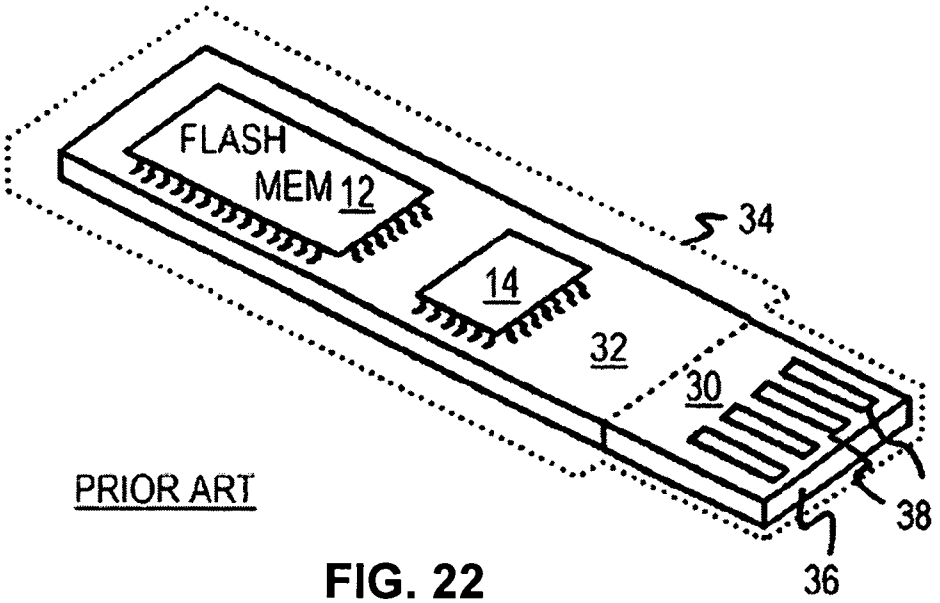

FIG. 22

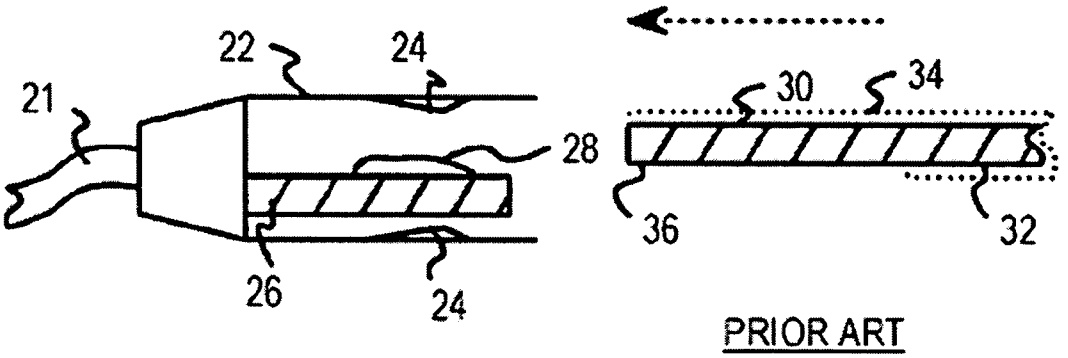

FIG. 23(A)

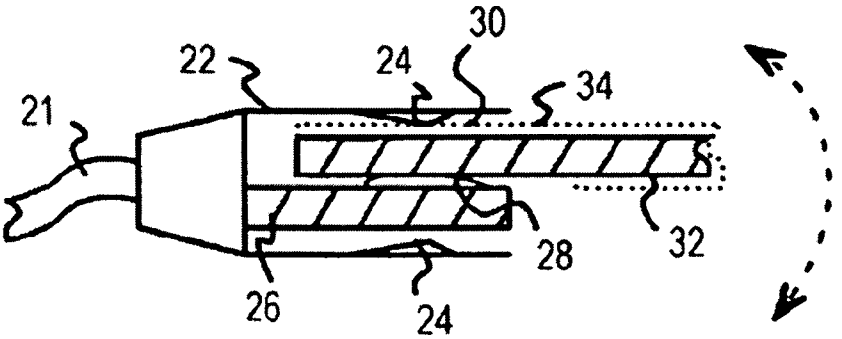

FIG. 23(B)

USB DEVICE WITH METAL PLUG SHELL ATTACHED TO PLASTIC HOUSING

FIELD OF THE INVENTION

This invention relates to portable electronic devices, and more particularly to portable electronic devices that utilize the Universal-Serial-Bus (USB) specification.

BACKGROUND OF THE INVENTION

Rapid advances in technology in several areas have converged to enable small, portable memory cards with vast capacities. Flash memory technologies such as those using electrically-erasable programmable read-only memory (EEPROM) have produced chips storing 128 M-Bytes or more. Small flash-memory cards have been designed that have a connector that can plug into a specialized reader, such as for compact-flash, secure-digital, memory stick, or other standardized formats.

More recently, flash memory cards are being sold that contain a USB connector. Such USB-flash memory cards do not require a specialized reader but can be plugged into a USB connector on a host system, such as a personal computer (PC). These USB-flash memory cards can be used in place of floppy disks. A USB-flash card can have a capacity of more than ten floppy disks in an area not much larger than a large postage stamp.

FIG. **20**(A) shows a prior-art flash-memory card with a conventional male USB connector. Flash memory chip **12** may be a 128 Mega-byte non-volatile chip or may have some other capacity. Controller chip **14** contains a flash-memory controller that generates signals to access memory locations within flash memory chip **12**. Controller chip **14** also contains a USB interface controller that serially transfers data to and from flash memory chip **12** over a USB connection.

Male USB connector **20** is mounted on a board **10**, which is a small circuit board with chips **12**, **14** mounted thereon. Multi-layer printed-circuit board (PCB) technology can be used for board **10**. A plastic case (not shown) can surround board **10**.

Male USB connector **20** contains a small connector substrate **16**, which is often white ceramic, black rigid plastic, or another sturdy substrate. Connector substrate **16** has four or more metal contacts **18** formed thereon. Metal contacts **18** carry the USB signals generated or received by controller chip **14**. USB signals include power, ground, and serial differential data D+, D−.

Male USB connector **20** contains a metal case (plug shell) **11** that wraps around connector substrate **16**. The plug shell touches connector substrate **16** on three of the sides of connector substrate **16**. The top side of connector substrate **16**, holding metal contacts **18**, has a large gap to the top of the plug shell. On the top and bottom of this metal wrap are formed holes **15**. USB connector **20** is a type-A USB connector.

FIG. **20**(B) shows a female USB socket connector **22**. Female USB socket connector **22** can be an integral part of a PC or other host system, or can be connected by cable **21** to such a host system. Another connector substrate **26** contains four metal contacts **28** that make electrical contact with the four metal contacts **18** of the male USB connector **20** of FIG. **20**(A). Connector substrate **26** is wrapped by a metal case, but small gaps are between the metal case and connector substrate **26** on the lower three sides.

Locking is provided by metal springs **24** in the top and bottom of the metal plug shell. When male USB connector **20** of FIG. **20**(A) is flipped over and inserted into female USB socket connector **22** of FIG. **20**(B), metal springs **24** lock into holes **15** of male USB connector **20**.

FIGS. **21**(A) and **21**(B) are cross-sections highlighting connections between male and female USB connectors. Female USB socket connector **22** is on the left while male USB connector **20** is being inserted from the right. Male USB connector **20** is flipped over relative to the view of FIG. **20**(A). Metal contacts **18** are formed on the lower surface of connector substrate **16** on male USB connector **20**, while metal contacts **28** are formed on the upper surface of connector substrate **26** on female USB socket connector **22**. Thus the metal contacts face one another to allow for electrical contact when male USB connector **20** is inserted into female USB socket connector **22** as shown in FIG. **21**(B).

Metal springs **24** formed on the metal case surrounding connector substrate **26** on female USB socket connector **22** fit into holes on the plug shell of male USB connector **20**. This helps to lock the connectors together.

A problem associated with the production of conventional male USB devices that utilize standard male USB plug connectors typically require lead-based soldering methods to attach the standard plug structure (e.g., substrate **16** and plug shell **11**) to circuit board **10**. Lead (Pb) is recognized as a hazardous material, and may at some point in time be banned from use. Lead-free soldering requires higher peak temperatures (about 240° C.) that can shrink or warp plastic substrates, thereby making such conventional USB plug connector structures unsuitable for lead-free fabrication processes.

FIG. **22** shows a prior-art USB flash memory card using a low-profile USB connector that avoids the need for attaching a separate substrate and plug shell to a circuit board by integrating male USB connector **30** with board **32**, and by omitting the plug shell entirely. Board **32** is a PCB that has flash memory chip **12** and controller chip **14** mounted on the upper surface thereof (i.e., on the same surface as contacts **38**). Board **32** is extended to include male USB connector **30**, which has metal contacts **38** formed on end **36** of board **32**. The width and thickness of board **32** at end **36** containing male USB connector **30** is designed to approximately match that of connector substrate **16** of FIG. **20**(A). Plastic case **34** can enclose board **32** but have an opening for metal contacts **38**. Plastic case **34** can cover the bottom and sides of male USB connector **30** up to end **36** to emulate portions of the metal case of the male USB connector of FIG. **20**(A).

FIGS. **23**(A) and **23**(B) show cross-sections of the prior-art lower-profile USB connector being inserted into a standard female USB connector. Board **32** that has male USB connector **30** formed on end **36** is flipped over from the view shown in FIG. **22**, and end **36** is inserted into female USB socket connector **22** from the right side.

Metal contacts **38** are located on the lower surface of male USB connector **30**. Plastic case **34** has an opening on the lower surface of male USB connector **30** to expose the metal contacts so they can make electrical connection with metal contacts **28** on the upper surface of connector substrate **26** of female USB socket connector **22** when inserted as shown in FIG. **23**(B).

Plastic case **34** helps to fill the gate between board **32** and the top edge of the metal case of female USB socket connector **22**. However, no holes are provided in plastic case **34**, so metal springs **24** are pushed up slightly when male USB connector **30** is inserted into female USB socket

connector **22**. Plastic case **34** is also formed along the thin edges of board **32** and helps to fill in the gaps between connector substrate **26** and the sides of the metal case of female USB socket connector **22** that are above and below the plane of FIG. **23**(B).

While USB connector **30** can be less expensive and smaller than the standard USB connector and avoids the need for plug shell, it can have the undesirable characteristic of wobbling in the female USB connector socket, and exposes contacts **38** to damage.

What is needed is a reduced length USB device having a male USB connector plug that avoids the need for soldering the plug shell to the circuit board.

SUMMARY OF THE INVENTION

The present invention is directed to a USB device in which a printed circuit board assembly (PCBA) is mounted inside a plastic housing structure such that integrated circuits (IC) mounted on a body of the PCBA are protectively enclosed inside the housing structure, and metal contact pads formed on the PCBA are exposed through an opening formed on a plug portion of the housing structure. The combined PCBA and plastic housing structure assembly facilitate inexpensive production. In addition, a metal plug shell is attached to the housing structure and extends over the plug portion such that an upper wall of the metal plug shell extends over the plug portion, and the metal contacts are exposed in a gap defined between the plug portion and the upper wall of the metal plug shell. The metal plug shell serves to protect the exposed metal contacts and to facilitate secure connection to a host USB female connector. By securing the metal plug directly to the plastic housing structure, the need for soldering the plug shell to the PCBA is avoided, as in conventional manufacturing methods, thus facilitating solder-free production of the PCBA.

In accordance with an aspect of the present invention, the metal plug shell is an elongated box-like structure including opposing upper and lower walls and opposing side walls that form rectangular edges defining front and rear openings. In some embodiments, the side walls of the metal plug shell are snap coupled onto the plug portion of the housing structure. In specific embodiments, the side walls define slots that receive tabs formed on the plug portion, whereby the metal plug shell is snap-coupled onto the plug portion such that the rear edge of the metal plug shell abuts the front wall of a relatively wide handle portion of the housing structure. The lower wall of the metal plug shell abuts the lower surface of the plug structure, and the upper wall of the metal plug shell is maintained over the metal contacts at a distance determined by USB standards (i.e., such that the metal contacts are accessible through the front opening of the metal plug shell when the USB device is inserted into a standard female USB socket connector). Because the metal plug shell is held by the tabs against the front wall of the handle portion and the lower wall of the plug portion, the metal plug shell is reliably rigidly held against the housing structure in the proper USB-defined orientation without requiring connection of the plug shell to the PCBA, as required in conventional USB devices. In some embodiments, a locking ring is mounted onto the front wall of the handle portion over the rear edge of the metal plug shell to further secure the metal plug shell to the housing structure in a cost effective and easily assembled manner. When the locking ring is slipped over the metal plug shell and secured to the front edge of the housing body portion, at least a portion of the metal plug shell (i.e., near the rear edge) extends into the central opening, thereby further maintaining the rear edge of the metal shell in its proper position.

In accordance with another aspect of the present invention, a USB controller IC is mounted at least partially on the relatively narrow PCB plug section of the PCBA, and in one specific embodiment below the contact pads to facilitate a reduced length of the USB device. The PCBA includes a printed circuit board (PCB) a relatively wide PCB body (rear) section and the relatively narrow PCB plug (front) section, which extends from a front edge of the PCB body section. The metal contacts are disposed on the upper surface of the PCB plug section, and various USB-compatible integrated circuits (ICs) are mounted on the upper and/or lower surfaces of the PCB. The USB controller IC, which is electrically connected to the metal contacts and controls USB-defined communication operations between the USB device and a host, is mounted onto the lower surface of the PCB at least partially on the PCB plug section, and in one embodiment is located below the metal contacts. By positioning the USB controller IC on the lower surface of the PCB plug section, and in particular below the metal contacts, instead of on the PCB body section as in conventional USB devices, the PCB body section can be made smaller (i.e., because the space conventionally used for the IC controller is no longer needed), thereby allowing a reduction in the overall length of the PCB body section. As such, this arrangement facilitates the production of shorter USB devices that require less material and, hence, are less expensive to manufacture.

In accordance with alternative embodiments, the housing structure includes either a single-piece, molded plastic housing structure having a hollow handle portion that receives the PCBA through a rear opening thereof, a two-part housing structure that is assembled over the PCBA, or a three-part housing structure including a tube-like structure that mounts over the plastic housing structure. In some embodiments, a rear cap is mounted over the rear opening of the plastic housing structure, and includes a PCB holder that maintains the rear edge of the PCBA in a predefined optimal position inside the plastic housing body, thus protecting the PCBA from shock damage. In one embodiment, a two-part housing structure includes a lower housing portion having a lower handle wall and first side handle wall portions extending perpendicular to side edges of the lower handle wall, and an upper housing portion including an upper handle wall and second side handle wall portions extending perpendicular to the upper handle wall, where the upper housing portion is mounted over the lower housing portion such that the first side wall portions mate with the second side wall portions to form an enclosure over the PCBA. In other embodiments, a housing assembly includes hollow box-like front and rear plastic housing portions that are mounted over opposite ends of the PCBA and are snap-coupled together inside of a metal tubing, which provides both further protection to the enclosed PCBA and an esthetically desirable appearance.

In accordance with alternative embodiments, a low profile (e.g., 4.5 mm) housing includes upper and lower walls that are coplanar with upper and lower walls of the metal plug shell.

In yet another embodiment, the disclosed USB device structures may be utilized to facilitate wireless (e.g., Bluetooth) communications.

BRIEF DESCRIPTION OF THE DRAWINGS

These and other features, aspects and advantages of the present invention will become better understood with regard to the following description, appended claims, and accompanying drawings, where:

FIG. **1** is a top side partial exploded perspective view showing a USB device according to a simplified embodiment of the present invention;

FIG. **2** is a top side perspective view showing the USB device of FIG. **1**;

FIGS. **3**(A) and **3**(B) are exploded and assembled perspective views showing a USB device according to a specific embodiment of the present invention;

FIG. **4** is a perspective view showing a PCBA utilized in the USB device of FIG. **3** according to an aspect of the present invention;

FIGS. **5**(A) and **5**(B) are exploded and assembled cross-sectional side views showing the USB device of FIG. **1**;

FIGS. **6**(A) and **6**(B) are cross-sectional side views showing a plug structure of the USB device of FIG. **3** and a standard female USB connector socket;

FIGS. **7**(A) and **7**(B) are cross-sectional side views showing a plug structure of an alternative USB device according to another embodiment of the present invention;

FIG. **8** is an exploded perspective view showing an exemplary USB device according to another embodiment of the present invention;

FIG. **9** is a top side perspective view showing the USB device of FIG. **8** in an assembled state;

FIG. **10** is an exploded perspective view showing an exemplary USB device according to another embodiment of the present invention;

FIG. **11** is a top front perspective view showing the USB device of FIG. **10** in an assembled state;

FIG. **12** is a bottom rear perspective view showing the USB device of FIG. **10** in an assembled state;

FIG. **13** is an exploded perspective view showing an exemplary USB device according to another embodiment of the present invention;

FIG. **14** is a top front perspective view showing the USB device of FIG. **13** in an assembled state;

FIG. **15** is a simplified side elevation view showing the USB device of FIG. **13**;

FIG. **16** is an exploded perspective view showing an exemplary USB device according to another embodiment of the present invention;

FIG. **17** is a top front perspective view showing the USB device of FIG. **16** in an assembled state;

FIG. **18** is a simplified side elevation view showing the USB device of FIG. **16**;

FIG. **19** is a perspective view showing a wireless communication-type USB device produced in accordance with another embodiment of the present invention;

FIG. **20**(A) shows a prior-art flash-memory card with a USB connector;

FIG. **20**(B) shows a female USB connector;

FIGS. **21**(A) and **21**(B) are cross-sections highlighting connections between male and female USB connectors;

FIG. **22** shows a prior-art USB flash memory card using a USB connector; and

FIGS. **23**(A) and **23**(B) show cross-sections of the prior-art USB connector of FIG. **22** being inserted into a standard female USB connector socket.

DETAILED DESCRIPTION OF THE DRAWINGS

The present invention relates to an improvement in USB connectors. The following description is presented to enable one of ordinary skill in the art to make and use the invention as provided in the context of a particular application and its requirements. As used herein, directional terms such as "upper", "upwards", "lower", "downward", "front", and "rear", are intended to provide relative positions for purposes of description, and are not intended to designate an absolute frame of reference. In addition, the phrases "integrally connected" and "integrally molded" is used herein to describe the connective relationship between two portions of a single molded or machined structure, and are distinguished from the terms "connected" or "coupled" (without the modifier "integrally"), which indicates two separate structures that are joined by way of, for example, adhesive, fastener, clip, or movable joint. Various modifications to the preferred embodiment will be apparent to those with skill in the art, and the general principles defined herein may be applied to other embodiments. Therefore, the present invention is not intended to be limited to the particular embodiments shown and described, but is to be accorded the widest scope consistent with the principles and novel features herein disclosed.

FIGS. **1** and **2** are top exploded and assembled perspective views, respectively, showing a Universal-Serial-Bus (USB) device **100** according to a generalized embodiment of the present invention. USB device **100** generally includes a printed circuit board assembly (PCBA) **110**, a plastic housing structure **140** that is fixedly mounted over PCBA **110**, and a metal plug shell **160** that is mounted onto plastic housing structure **140** in the manner described below.

Referring to the upper portion of FIG. **1**, PCBA **110** includes a printed circuit board (PCB) **111** including a relatively wide PCB body section **112** and a relatively narrow PCB plug section **114** that extends from a front end of PCB body section **112**. PCB **111** is a substantially flat substrate, and has opposing sides that are referred to below as upper surface **116** and lower surface **118**. Formed on upper surface **116** in plug section **114** are four metal contacts **120**. Metal contacts **120** are shaped and arranged in a pattern established by the USB specification. A control integrated circuit (IC) **130** is mounted on lower surface **118**, and one or more auxiliary ICs **135** (e.g., flash memory devices and/or RF communication circuits) are respectively mounted on upper surface **116** and lower surface **118**. ICs **130** and **135** are electrically connected to each other and to metal contacts **120** by way of metal traces **131** and **136**, respectively (a few traces are depicted in FIG. **1** in a simplified manner by dashed lines for illustrative purposes). PCB **111** is formed in accordance with known PCB manufacturing techniques such that metal contacts **120** and ICs **130** and **135** (as well as zero or more other circuit components, which are omitted for brevity) are electrically interconnected by a predefined network including conductive traces **131** and **136** and other conducting structures (e.g., metal "vias" that extend between upper surface **116** and lower surface **118** through PCB **111**) that are sandwiched between multiple layers of an insulating material (e.g., FR4) and adhesive.

Referring to FIG. **1**, housing structure **140** is a box-like structure secured over the PCBA **110**, and includes a relatively wide handle portion **151** and a relatively narrow plastic plug portion **154** extending from a front handle wall **152**F of handle portion **151**. PCB body section **112** of PCBA **110** is enclosed inside handle portion **151**, and PCB plug section **114** extends through an opening **153**F defined by a

front handle wall **152**F, and is supported between opposing side walls **155S1** and **155S2** and over a lower plug wall **155**B of plug portion **154** such that metal contacts **120** face away from plug portion **154**, thereby exposing metal contacts **120** for contact with a host system.

As shown in FIGS. **1** and **2**, in one embodiment metal plug shell **160** is a box-like metal structure having opposing side walls **165S1** and **165S2**, and opposing upper and lower walls **165**T and **165**B that are respectively integrally connected to upper and lower ends (edges) of the shell side walls. In an alternative embodiment (not shown), lower shell wall **165**B may be omitted, although the resulting structure may not provide sufficient rigidity. The upper, lower and side shell walls collectively form a front edge **162**F defining a front opening **168**F, and collectively form a rear edge **162**R defining a rear opening **168**R. In accordance with an aspect of the present invention, as depicted in FIG. **2**, a metal plug shell **160** is fixedly connected to housing structure **140** such that rear edge **162**R abuts front handle wall **152**F, lower shell wall **165**B abuts lower wall **155**B of plug portion **154**, side shell walls **165S1** and **165S2** respectively abut side walls **155S1** and **155S2** of plug portion **154**, and upper wall **165**T extends over the upper surface of PCB plug section **114** from front handle wall **152**F to a point located over front wall **155**F of plug portion **154**. In addition, upper wall **165**T is spaced from PCB plug section **114** such that metal contacts **120** are exposed in a gap G defined between PCB plug section **114** and upper wall **165**T, thereby facilitating contact between metal contacts **120** and corresponding pins of a host system by inserting the connector portion of the host system through front opening **168**F. By providing plastic housing structure **140** in which metal contacts **120** formed directly on PCBA **110** are exposed in gap G, and by mounting metal plug shell **160** directly onto housing structure **140** such that the side and lower walls of metal plug shell **160** abut corresponding side and lower walls of plug portion **154**, the present invention facilitates the inexpensive production of durable USB devices without soldering any structures to PCBA **110**, as required in conventional male USB connectors, thereby facilitating the production of lead-free USB devices.

FIGS. **3**(A) and **3**(B) are exploded and assembled perspective views, respectively, showing a USB device **200** in accordance with a specific embodiment of the present embodiment. USB device **200** includes PCBA **210**, a housing assembly **240**, a metal plug shell **260**, and an optional protective cap **290**. PCBA **210** is similar to PCBA **110** (described above), but includes additional features set forth below. Housing assembly **240** includes a molded plastic housing **250**, a rear cover **270**, and a locking ring **280**. Metal plug shell **260** is similar to metal plug shell **160** (discussed above), but includes additional features set forth below. Protective cap **290** is a molded plastic structure that mounts onto the front end of USB device **200** to protect metal plug shell **260** when not in use.

Referring to FIGS. **3**(A) and **4**, PCBA **210** is similar to PCBA **110** (described above), and thus structures and features similar to those described above are identified with the same reference numerals. As depicted in FIGS. **4** and **5**(A), in accordance with an aspect of the present invention, a USB controller IC **130** is mounted at least partially on relatively narrow PCB plug section **114** of PCBA **210**, and as indicated by the dashed vertical line "V" in FIG. **5**(A), at least a portion of USB controller IC **130** is located directly below contact pads **120**. The positioning of USB controller IC **130** on plug portion **114** is facilitated by the smaller footprint of USB controllers. By positioning USB controller IC **130** on lower surface **118** of PCB plug section **114**, and in particular below metal contacts **120**, instead of on PCB body section **112** as in conventional USB devices, the overall length L of PCB body section **112** can be shortened, thereby facilitating the production of shorter USB devices that require less material and, hence, are less expensive to manufacture.

According to another aspect of the present embodiment, housing structure **250** is a single-piece, molded plastic structure including a relatively wide handle portion **251** and a relatively narrow plastic plug portion **254** that extends from a front handle wall **252**F of handle portion **251**. Handle portion **251** includes opposing upper and lower walls **252**T and **252**B that are integrally molded to opposing upper and lower edges of opposing side walls **252S1** and **252S2**, thereby forming a box-like enclosure that is accessible through a rear opening **253**R defined by a rear edge **252**R. During assembly, PCBA **210** is inserted through rear opening **253**R until PCB body section **112** is received inside handle portion **251**. Front handle wall **252**F defines an opening **253**F through which PCB plug section **114** protrudes during the assembly process such that metal contacts **120** are exposed on plug portion **254**. Plug portion **254** includes a plug lower wall **255**B, opposing side walls **255S1** and **255S2**, a front wall **255**F, and several plug support ribs **256** that extend upward from an upper surface of plug lower wall **255**B behind front wall **255**F and between side walls **255S1** and **255S2**. As indicated in FIGS. **5**(A) and **5**(B), when PCBA **210** is fully inserted into housing structure **250**, the front edge of PCB plug section **114** extends through a front opening **253**F defined by front handle wall **252**F, and is supported by tabs **256**. As indicated in FIG. **5**(B), USB controller IC **130** extends into a hollow region defined between the side walls of plug portion **254** and behind ribs **256**.

Referring again to FIG. **3**(A), metal plug shell **260** includes a piece of sheet metal that is stamped and folded according to known techniques to form opposing shell side walls **265S1** and **265S2** that are integrally connected along their respective upper and lower edges to an upper shell wall **265**T and a lower wall **265**B. In accordance with an aspect of the invention, side walls **265S1** and **265S2** define slots **267** that receive tabs **257** protruding from side walls **255S1** and **255S2** of plug portion **254** when metal plug shell **260** is mounted over plug portion **254**, whereby metal plug shell **260** is conveniently snap-coupled onto housing structure **250** such that rear edge **262**R of metal plug shell **260** abuts front handle wall **252**F. In particular, as indicated in FIGS. **6**(A) and **6**(B), each tab **257** becomes engaged with a corresponding slot **267**, thus securing metal plug shell **260** to plug portion **254** such that lower wall **265**B of metal plug shell **260** abuts the lower surface of lower wall **255**B, and upper wall **265**T of metal plug shell **260** supported by side walls **265S1** and **265S2** such that a gap G is provided between metal contacts **120** and upper wall **265**T. Alternatively, tabs **257** can be recessing (instead of protruding) on side walls **255S1** and **255S2**. After proper alignment metal plug shell **260** can be fixedly attached to plug portion **254** by a compression method leaving behind indentations **267** (instead of slots) on side walls **265S1** and **265S2** and aligned with tabs **257**. Another method is to have metal plug shell **260** molded onto plug portion **254** (not snap-coupled as described) to achieve stronger performance.

Referring again to FIG. **3**(A), locking ring **280** mounts on front handle wall **252**F of housing structure **250**, and serves to further secure metal plug shell **260** to housing structure **250**. Locking ring **280** is a molded plastic structure having a peripheral collar **282** that attaches to corresponding mount-

ing structures **258**F formed on front handle wall **252**F, and a front plate **284** defining a rectangular opening **287** that is substantially the same size as (or slightly larger than) metal plug shell **260**. After metal plug shell **260** is attached to plug portion **254** in the manner described above, locking ring **280** is mounted by aligning opening **287** with metal plug shell **260**, and sliding locking ring **280** over metal plug shell **260** until locking ring **280** contacts front handle wall **252**F. As indicated in FIG. **5**(B), locking ring **280** is then secured over front handle wall **252**F by connecting (e.g., by snap-coupling) peripheral collar **282** to mounting structures **258**F, whereby an inside edge of front plate **284** pinches or otherwise restrains inside edge **262**R of metal plug shell **260**, thereby further securing metal plug shell **260** to housing structure **250**. Locking ring **280** also protects front wall **252**F from potential damage caused during insertion into a host system.

Referring again to FIG. **3**(A), rear cover **270** mounts on rear edge **252**R of housing structure **250**, and serves to secure PCBA **210** inside housing structure **250**. Rear cover **270** includes a peripheral collar **272** extending from a rear cover plate **274**, and a PCB support structure **275** that is provided on an inside surface of rear cover plate **274**. As indicated in FIG. **5**(B), after PCBA **210** is inserted into housing structure **250**, rear cover **270** is mounted onto rear edge **252**R of handle portion **251** over rear opening **253**R such that peripheral collar **272** engages (e.g., becomes snap-coupled to) corresponding rear mounting structures **258**R. In addition, PCB support structure **275** engages and supports a rear edge **112**R of PCBA **210**, thereby preventing movement of PCBA **210** inside housing structure **250**, thus preventing ICs **135**T and **135**B from impacting upper and lower handle walls **252**T and **252**B, respectively, when the USB device is dropped or subjected to other mechanical shock.

As shown in FIGS. **3**(A) and **3**(B), PCBA **210** further includes a light-producing device (e.g., a light pipe) **137** that is mounted onto a corresponding fixture **138** provided on a rear edge of PCB **111**, and end plate **274** of rear cover **270** defines an opening **277** that, when end cover **270** is mounted onto rear mounting structure **258**R, is aligned with PCBA **210** such that light pipe **137** is visible through opening **277**.

As shown in FIG. **3**(A), key-chain holes **259** and **279** are respectively defined in side handle wall **252S1** of handle portion **251** and in rear cover **270**. As indicated in FIG. **3**(B), when rear cover **270** is mounted onto housing structure **250**, key-chain holes **259** and **279** cooperate to provide a through hole for engaging a convenient key-chain or other carrying structure (indicated by dashed line).

Similar to conventional plug shells, metal plug shell **260** serves to protect metal contacts **120**, and to facilitate connection of USB device **200** to a host female USB connector. As indicated in FIG. **6**(A), gap distance G generally corresponds to a height H**1** between metal contacts **28** and upper wall **23**C of conventional standard female USB connector socket **22**. Similarly, plug portion **254** and metal plug shell **260** are formed such that the upper surface of PCB plug section **114** (i.e., metal contacts **120**) are spaced a predetermined distance T from the lower surface of bottom shell wall **265**B, which distance T corresponds to a height H**2** between metal contacts **28** and lower wall **23**A of conventional standard female USB connector socket **22**. Finally, shell side walls **265S1** and **265S2** of plug shell structure **260** are spaced apart by a width W**1** that generally corresponds to the width W**2** associated with side walls **23**B-**1** and **23**B-**2** of standard female USB connector socket **22**. Accordingly, as indicated in FIG. **6**(B), when inserted into standard female USB connector socket **22**, PCB plug section **114**, plug portion **254** and metal plug shell **260** are securely received in standard female USB connector socket **22** such that metal contacts **120** slide against and are contacted by corresponding metal contacts **28** of the female connector. In particular, PCB plug section **114**, plug portion **254**, and lower shell wall **265**B are sized to be received in lower socket region **25**A of female USB connector socket **22**, with shell side walls **265S1** and **265S2** respectively received in side socket regions **25**B-**1** and **25**B-**2**, and shell upper wall **265**T received in upper socket region **25**C.

FIGS. **7**(A) and **7**(B) are simplified front views showing the plug portion of a USB device **200**A according to a variation of the embodiment described above. Structures of USB device **200**A that are identical to those of USB device **200** are identified with the same reference numerals, and will not be described in detail for sake of brevity. In accordance with another aspect, PCBA **210**A includes elongated metal dividers **125** formed on the upper surface of PCB plug section **114**, with each metal divider **125** being located between an adjacent pair of the metal contacts **120**. Metal dividers **125** increase the rigidity of the plug structure, thus further enhancing the secure engagement between the plug structure and standard female USB socket connector **22**, as indicated in FIG. **7**(B).

The various USB device structures described herein may be modified to include different housing structures, such as those described in the following embodiments.

FIGS. **8** and **9** are exploded and assembled perspective views, respectively, showing a USB device **300** in accordance with another specific embodiment of the present embodiment. Structures and features of USB device **300** similar to those described above are identified with the same reference numerals for brevity. Referring to FIG. **9**, USB device **300** includes a housing assembly **340** made up of an upper housing portion **350**T and a lower housing portion **350**B that are coupled together to form a housing structure similar to that described above. Housing assembly **340** also includes a locking ring **280** and a rear cover **270** (both described above). Referring to FIG. **8**, lower housing portion **350**B includes a lower handle portion **351**B having a lower handle wall **352**B and side handle wall portions **352S1**B and **352S2**B extending perpendicularly upward from side edges of lower handle wall **352**B. Similarly, upper housing portion **350**T includes an upper handle wall **352**T and second side handle wall portions **352S1**T and **352S2**T that extend perpendicularly downward from upper handle wall **352**T. During assembly, PCBA **210** is mounted onto lower housing portion **350**B, and then upper housing portion **350**T is mounted onto lower housing portion **350**B such that side wall portions **352S1**T and **352S2**T mate with side wall portions **352S1**B and **352S2**B to form an enclosure over PCB body section **112**. Metal plug shell **260**, locking ring **280** and end cover **270** are then assembled onto associated ends of the resulting housing structure in a manner similar to that described above, thus completing the assembly process. Note that end cover **270** and locking ring **280** serve the additional function of holding upper housing portion **350**T onto lower housing portion **350**B. In particular, locking ring **280** is mounted onto front handle wall portions **352**FT and **352**FB of upper housing portion **350**T onto lower housing portion **350**B, respectively, over a rear edge **262**R of metal plug shell **260**. Alternatively, tabs **257** can be recessing (instead of protruding) on side walls **255S1** and **255S2**. After proper alignment metal plug shell **260** can be fixedly attached to plug portion **254** by a compression method leaving behind indentations **267** (instead of slots) on side

walls **265S1** and **265S2** and aligned with tabs **257** on. Another method is to have metal plug shell **260** molded to plug portion **254** (not snap-coupled) to achieve stronger performance.

FIGS. **10**, **11** and **12** are exploded and assembled perspective views showing a USB device **400** in accordance with another specific embodiment of the present embodiment. Structures and features of USB device **400** similar to those described above are identified with the same reference numerals and detailed description is omitted from the following discussion for brevity. Referring to FIG. **10**, USB device **400** includes a housing assembly **440** made up of a front housing portion **450**F, a rear housing portion **450**R, and a metal tube **441**. Front housing portion **450**F includes opposing upper and lower handle wall portions **452**FT and **452**FB and opposing side handle wall portions **452**FS**1** and **452**FS**2** that extend from a front handle wall **452**F, and collectively define a first opening **453**FR. A plug portion **454**, which is substantially identical to the plug portions described above, extends from a front handle wall **452**F, and includes tabs **457** that couple with slots **267** formed in metal plug shell **260** in the manner described above. Alternatively, tabs **457** can be recessing (instead of protruding) on side walls **455S1** and **455S2**. After proper alignment metal plug shell **260** can be fixedly attached to plug portion **454** by a compression method leaving behind indentations **267** (instead of slots) on side walls **265S1** and **265S2** and are aligned with tabs **457**. Another method is to have metal plug shell **260** molded to plug portion **454** (not snap-coupled) to achieve stronger performance. Rear housing portion **450**R includes opposing upper and lower handle wall portions **452**RT and **452**RB and opposing side handle wall portions **452**RS**1** and **452**RS**2** that extend from a rear handle wall **452**R, and collectively define a second opening (facing metal tube **441** in FIG. **10**). Locking structures are provided on respective edges of rear housing portion **450**R and front housing portion **450**F to facilitate connection of the housing portions during assembly. In the current embodiment, locking fingers **458**R extend from front edges of side handle wall portions **452**RS**1** and **452**RS**2** and mate with locking notches **458**F**1** and **458**F**2**, respectively, which are formed in rear edges of side handle wall portions **452**FS**1** and **452**FS**2**. Those skilled in the art will recognize that other locking mechanisms may also be used to secure front housing portion **450**F to rear housing portion **450**R, such as those disclosed in co-owned U.S. patent application Ser. No. 10/796,716, which is incorporated herein by reference in its entirety. Metal tube **441** including opposing upper and lower walls **442**T and **442**B integrally connected to respective upper and lower edges of opposing side walls **442S1** and **442S2**, which collectively form a front edge **442**F defining a front opening **443**F and a rear edge **442**R defining a rear opening **443**R. During assembly, PCBA **210** is inserted into one of front housing portion **450**F and rear housing portion **450**R, with metal tube **441** either already mounted or subsequently mounted over upper/lower/side walls of the selected housing portion. The upper/lower/side walls of the other housing portion are then inserted into metal tube **441** until locking fingers **458**R mate with locking notches **458**F, thus securing housing assembly **440** together as indicated in FIGS. **11** and **12**. Metal tube **441** thus provides both further protection to PCBA **210** and an esthetically desirable appearance to USB device **400**.

As indicated in FIG. **10**, USB device **400** utilizes a light-generating device **437** that mounts onto a rear wall **452**R of rear housing portion **450**R, and includes contacts that extend through an associated opening **477** to connect with corresponding connecting structure **138** formed on PCBA **210**.

FIGS. **13** and **14** are exploded and assembled perspective views showing a USB device **500** in accordance with another specific embodiment of the present embodiment. Structures and features of USB device **500** similar to those described above are identified with the same reference numerals for brevity. Referring to FIG. **13**, USB device **500** is similar to USB device **400** (described above) in that it includes a housing assembly **540** made up of a front housing portion **550**F, a rear housing portion **550**R, and a metal tube **541** that are constructed and assembled substantially as described above. However, as indicated in FIG. **15**, USB device **500** differs from USB device **400** in that opposing upper and lower walls **542**T and **542**B of metal tube **541** are respectively coplanar with the upper and lower walls **265**T and **265**B of metal plug shell **260**, thus providing a low profile structure having a height H**1** (e.g., 4.5 mm) that is essentially identical to the height of metal plug shell **260**. By way of comparison, referring again to FIG. **11**, metal tube **441** of "standard sized" USB device **400** has a height H**2** of approximately 6.5 mm. Thus, USB device **500** has a relatively low "profile" relative to standard sized USB devices.

The low profile arrangement of USB device **500** is not limited to embodiments including metal tubes. For example, FIGS. **16-18** depict a USB device **600** having a housing assembly **640** including an integral housing structure **650** that is similar to that of USB device **200** (described above), but differs in that housing structure **650** has a handle portion **651** formed such that upper handle wall **652**T and lower handle wall **652**B are respectively coplanar with upper and lower walls **265**T and **265**B of metal plug shell **260**, thus providing a low profile structure having a height H**1** (e.g., 4.5 mm) that is essentially identical to the height of metal plug shell **260**. Note that, in this low profile arrangement, the locking ring is omitted, and that rear cover **670** is mounted inside a rear opening **653**R defined by handle portion **651**. In addition, a low profile light pipe **637** is utilized to facilitate the lower profile.

The various USB device structures described herein may be further modified using appropriate ICs (e.g., ICs **130** and **135**) to serve as convenient external storage for, for example, MP3 players (i.e., media storage for music), digital cameras, and mobile phones.

In yet another embodiment, the disclosed USB device structures may be utilized to facilitate wireless communications. In this case, a USB device (e.g., Bluetooth USB adapter **700** shown in FIG. **19**) may be plugged into the USB port of a host device, and may include a wireless communication device **735** that generates wireless signals emitted from a transceiver antenna **775**, which may be provided on a back side of housing **750** to maximize the effect of signal transmission. Wireless communication device **735** communicates with a host (e.g., a computer) via USB control IC **730**, and includes a Bluetooth controller, a radio frequency (RF) transceiver, a baseband controller, memory (e.g., EEPROM), a voltage regulator, a crystal, and a control circuit for controlling LED **770**. These circuits may be combined together, along with passive circuits (e.g., resistors, capacitors and inductors) in a single chip, as depicted, or formed on one or more separate chips that are mounted on PCB **710** and enclosed by housing **750** and associated metal plug shell **760** that are connected together in the manner described above. Such an arrangement would facilitate communication between the host and a wireless communication device, such as a BlueTooth-enabled device. Bluetooth is a

wireless technology that enables any electrical device to wirelessly communicate in the 2.4 GHz frequency band. It allows devices such as mobile phones, headsets, PDA's and computers to communicate and send data to each other without the need for wires or cables to link to devices together. It has been specifically designed as a low cost, low power, radio technology, which is particularly suited to the short range Personal Area Network (PAN) application. By plugging Bluetooth USB adapter **700** into the USB port, the Bluetooth USB adapter enables a non-Bluetooth electrical device (i.e., the host) to communicate with Bluetooth enabled devices. One specific wireless application may be a BlueTooth mouse device, which are used today for cursor pointing. Another application example is allowing computer user doing two-way communication to Bluetooth-wireless equipped mobile phones, PDA, keyboard, printer, digital camera, and MP3 player. Other applications may include wireless headsets. Yet another application may include enabling BlueTooth wireless connections inside an automobile to facilitate "hands free" operation of a mobile phone. Of course, other wireless communication protocols, such as IrDA infrared transmitting devices, may also be utilized in conjunction with USB devices of the present invention.

In addition to the specific housing arrangements described above with reference to the various disclosed embodiments, those skilled the art will recognize that other housing structures and connection methods may be used. For example, the upper and lower housing portions of FIG. **8** may be connected by way of ultrasonic welding. Accordingly, unless otherwise specified, the appended claims are not intended to be limited to the disclosed housing arrangements.

Although the present invention has been described with respect to certain specific embodiments, it will be clear to those skilled in the art that the inventive features of the present invention are applicable to other embodiments as well, all of which are intended to fall within the scope of the present invention.

The invention claimed is:

1. A Universal-Serial-Bus (USB) device comprising:

a printed circuit board assembly (PCBA) including:

a printed circuit board (PCB) including a relatively wide PCB body section and a relatively narrow PCB plug section, wherein the PCB has opposing upper and lower surfaces, a plurality of metal contacts disposed on the upper surface of the PCB plug section, and a plurality of integrated circuits (ICs) including at least one IC mounted on one of the upper surface and the lower surface of the PCB body section;

a plastic housing structure secured over the PCBA, the housing structure including a relatively wide handle portion and a relatively narrow plastic plug portion extending from a front handle wall of the handle portion, wherein the PCB body section is enclosed inside the handle portion, and wherein the PCB plug section extends through an opening defined by the front handle wall and is supported over a lower plug wall of the plug portion; and

a metal plug shell is fixedly connected to the housing structure such that an upper wall of the metal plug shell extends from the front handle wall over the plug portion, wherein the metal contacts of the PCB are exposed in a gap defined between the PCB plug section and the upper wall of the metal plug shell,

wherein the handle portion of the housing structure includes opposing upper and lower walls and opposing side walls that collectively define a housing chamber and include rear edges defining a rear opening,

wherein the PCBA is received in the housing chamber such that a rear edge of the PCB is located adjacent to the rear opening, and

wherein the USB device further comprises a rear cover mounted onto the rear edges of the handle portion, the rear cover including a PCB support structure extending through the rear opening and connected to the rear edge of the PCB.

2. The USB device according to claim **1**, wherein the metal plug shell comprises opposing shell side walls respectively positioned along side walls of the plug portion, a lower shell wall integrally connected to lower ends of the shell side walls and positioned under the lower wall of the plug portion, and an upper shell wall integrally connected to upper ends of the first and second shell side walls and positioned over and spaced from the upper surface of the PCB plug section to form the predetermined gap.

3. The USB device of claim **2**, wherein the PCBA comprises a lead-free structure.

4. The USB device according to claim **2**,

wherein plug portion further comprises a plurality of protruding tabs,

wherein the metal plug shell defines a plurality of slots, and

wherein the metal plug shell is mounted on the plug portion such that each tab of the plug portion is received in a corresponding slot of the metal plug shell.

5. A Universal-Serial-Bus (USB) device comprising:

a printed circuit board assembly (PCBA) including:

a printed circuit board (PCB) including a relatively wide PCB body section and a relatively narrow PCB plug section, wherein the PCB has opposing upper and lower surfaces, a plurality of metal contacts disposed on the upper surface of the PCB plug section, and a plurality of integrated circuits (ICs) including at least one IC mounted on one of the upper surface and the lower surface of the PCB body section;

a plastic housing structure secured over the PCBA, the housing structure including a relatively wide handle portion and a relatively narrow plastic plug portion extending from a front handle wall of the handle portion, wherein the PCB body section is enclosed inside the handle portion, and wherein the PCB plug section extends through an opening defined by the front handle wall and is supported over a lower plug wall of the plug portion; and

a metal plug shell is fixedly connected to the housing structure such that an upper wall of the metal plug shell extends from the front handle wall over the plug portion, wherein the metal contacts of the PCB are exposed in a gap defined between the PCB plug section and the upper wall of the metal plug shell,

wherein the metal plug shell comprises opposing shell side walls respectively positioned along side walls of the plug portion, a lower shell wall integrally connected to lower ends of the shell side walls and positioned under the lower wall of the plug portion, and an upper shell wall integrally connected to upper ends of the first and second shell side walls and positioned over and spaced from the upper surface of the PCB plug section to form the predetermined gap, and

wherein the plastic housing structure further comprises a locking ring mounted onto the front handle wall over a rear edge of the metal plug shell.

6. The USB device according to claim 1, wherein the PCBA further comprises a USB controller IC mounted on the lower surface of the PCB and positioned such that at least a portion of the USB controller IC is attached to the relatively narrow PCB plug section.

7. The USB device according to claim 6, wherein the USB controller IC is at least partially located below the metal contacts.

8. The USB device of claim 1, further comprising a light-producing device mounted on the rear edge of the PCB, wherein the rear cover defines an opening that is aligned with the PCB such that the light-producing device is visible through the opening.

9. The USB device of claim 1, wherein at least one wall of the handle portion of the housing structure and the rear cover define corresponding key-chain holes for receiving a key chain therein.

10. The USB device of claim 1, wherein the plug portion of the housing structure comprises:

a plug lower wall; and

a plurality of plug support ribs mounted on an upper surface of the plug lower wall,

wherein the PCBA is mounted on the plug portion such that the PCB plug section abuts an upper surface of the plug support ribs.

11. The USB device of claim 1, wherein the PCB further comprises metal dividers formed on the upper surface of the PCB, each of the metal dividers being located between an adjacent pair of the metal contacts.

12. The USB device of claim 1, wherein the handle portion is integrally molded to the plug portion and includes opposing upper and lower walls that are integrally molded to opposing upper and lower edges of opposing side walls.

13. The USB device of claim 12,

wherein the metal plug shell further comprises a lower wall that is parallel to the upper wall and located under the plug portion of the housing structure, and

wherein the opposing upper and lower walls of the handle portion are respectively coplanar with the upper and lower walls of the metal plug shell.

14. The USB device of claim 1, wherein the housing structure comprises:

a lower housing portion including a lower handle portion having a lower handle wall and first side handle wall portions extending perpendicular to side edges of the lower handle wall;

an upper housing portion including an upper handle wall and second side handle wall portions extending perpendicular to the upper handle wall,

wherein the upper housing portion is mounted over the lower housing portion such that the first side wall portions mate with the second side wall portions to form an enclosure over the PCB body section.

15. The USB device of claim 14,

wherein the upper housing portion and the lower housing portion further comprise first and second front handle wall portions, respectively; and

wherein the USB device further comprises a locking ring mounted onto the first and second front handle wall portions over a rear edge of the metal plug shell.

16. A Universal-Serial-Bus (USB) device comprising:

a printed circuit board assembly (PCBA) including:

a printed circuit board (PCB) including a relatively wide PCB body section and a relatively narrow PCB plug section, wherein the PCB has opposing upper and lower surfaces, a plurality of metal contacts disposed on the upper surface of the PCB plug section, and a plurality of integrated circuits (ICs) including at least one IC mounted on one of the upper surface and the lower surface of the PCB body section;

a plastic housing structure secured over the PCBA, the housing structure including a relatively wide handle portion and a relatively narrow plastic plug portion extending from a front handle wall of the handle portion, wherein the PCB body section is enclosed inside the handle portion, and wherein the PCB plug section extends through an opening defined by the front handle wall and is supported over a lower plug wall of the plug portion; and

a metal plug shell is fixedly connected to the housing structure such that an upper wall of the metal plug shell extends from the front handle wall over the plug portion, wherein the metal contacts of the PCB are exposed in a gap defined between the PCB plug section and the upper wall of the metal plug shell,

wherein the housing structure comprises:

a front housing portion including opposing upper and lower handle wall portions and opposing side handle wall portions extending from the front handle wall;

a rear housing portion including opposing upper and lower handle wall portions and opposing side handle wall portions extending from a rear handle wall; and

wherein the USB device further comprises a metal tube including opposing upper and lower walls respectively mounted over the upper and lower handle wall portions of the front and rear housing portions, and opposing side walls respectively mounted over the side wall portions of the front and rear housing portions,

wherein the metal tube extends between the front handle wall and the rear handle wall, and

wherein the front housing portion is coupled to the rear housing portion inside the metal tube.

17. The USB device of claim 16,

wherein the metal plug shell further comprises a lower wall that is parallel to the upper wall and located under the plug portion of the housing, and

wherein the opposing upper and lower walls of the metal tube are respectively coplanar with the upper and lower walls of the metal plug shell.

18. The low-profile USB device of claim 1, wherein the ICs include a wireless communication device.

* * * * *