US007269004B1

(12) **United States Patent**
Ni et al.

(10) **Patent No.: US 7,269,004 B1**
(45) **Date of Patent: Sep. 11, 2007**

(54) **LOW-PROFILE USB DEVICE**

(75) Inventors: **Jim Ni**, San Jose, CA (US); **Ren-Kang Chiou**, Fremont, CA (US)

(73) Assignee: **Super Talent Electronics, Inc.**, San Jose, CA (US)

(*) Notice: Subject to any disclaimer, the term of this patent is extended or adjusted under 35 U.S.C. 154(b) by 77 days.

(21) Appl. No.: **11/112,501**

(22) Filed: **Apr. 21, 2005**

(51) **Int. Cl.**
G06F 1/16 (2006.01)

(52) **U.S. Cl.** **361/686**; 361/737; 361/727; 439/79; 439/607

(58) **Field of Classification Search** 361/737, 361/727, 683–686, 715, 752; 439/607, 374, 439/79, 379, 610, 680
See application file for complete search history.

(56) **References Cited**

U.S. PATENT DOCUMENTS

6,618,243 B1 9/2003 Tirosh
6,854,984 B1 2/2005 Lee et al.
6,900,988 B2 * 5/2005 Yen 361/737
6,944,028 B1 * 9/2005 Yu et al. 361/737
2001/0038547 A1 * 11/2001 Jigour et al. 365/43
2003/0100203 A1 5/2003 Yen
2004/0145875 A1 * 7/2004 Yu et al. 361/752
2005/0248926 A1 * 11/2005 Asom et al. 361/752

* cited by examiner

Primary Examiner—Tuan T. Dinh
Assistant Examiner—Hung S. Bui
(74) *Attorney, Agent, or Firm*—Bever, Hoffman & Harms, LLP; Patrick T. Bever

(57) **ABSTRACT**

A low-profile Universal-Serial-Bus (USB) device includes a PCBA in which all of the ICs are formed on a side of a PCB opposite to the metal contacts. The ICs include, for example, a USB controller chip and flash memory chip or communication chip. A housing is attached over the ICs and extends a minimum height above the metal contacts.

21 Claims, 13 Drawing Sheets

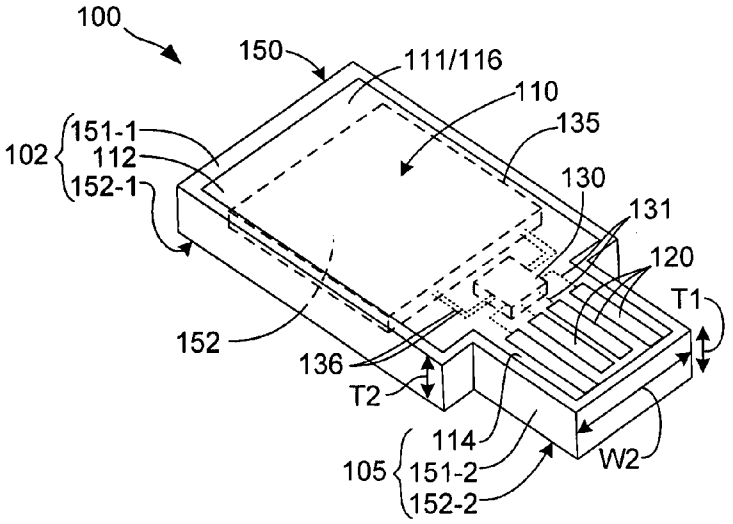

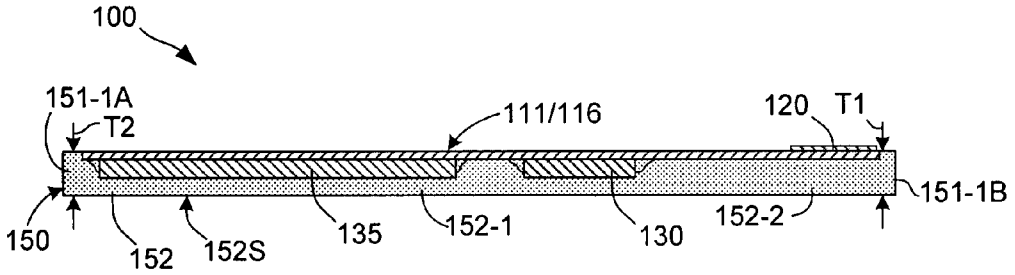

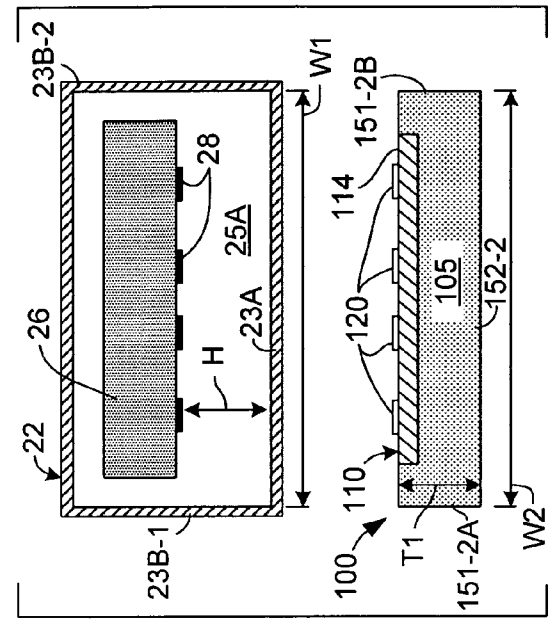

FIG. 2(A)

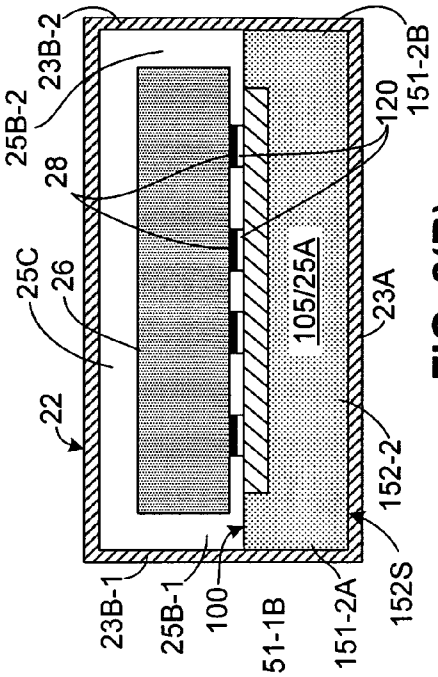

FIG. 2(B)

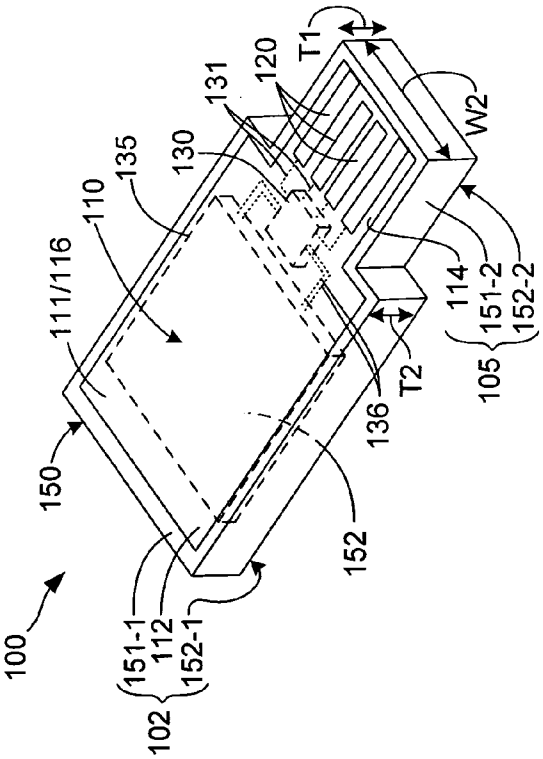

FIG. 1(A)

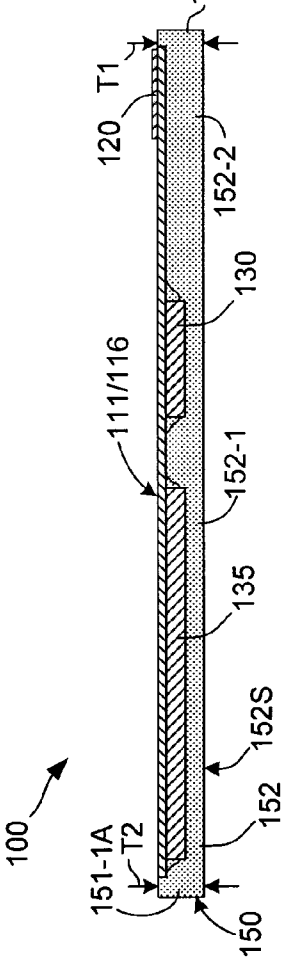

FIG. 1(B)

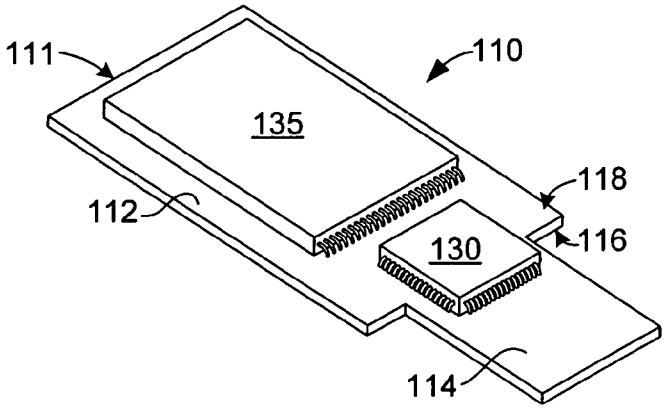

FIG. 3

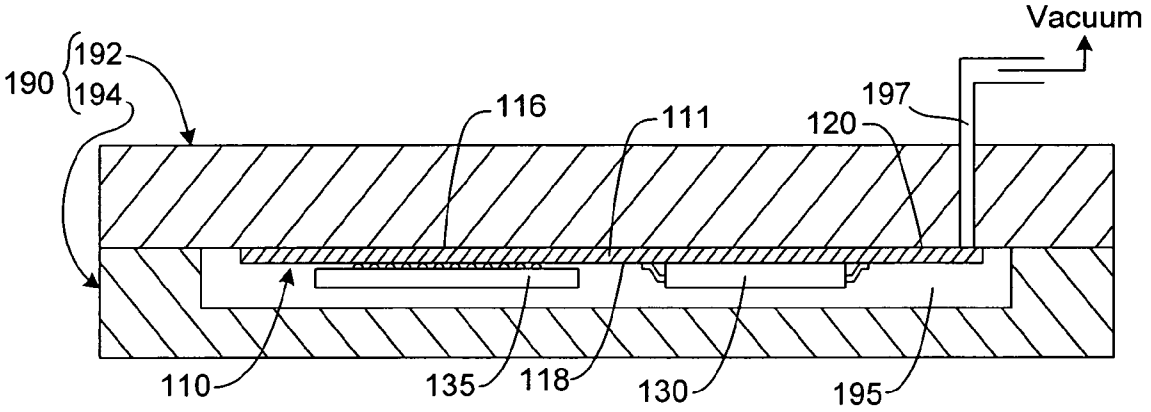

FIG. 4

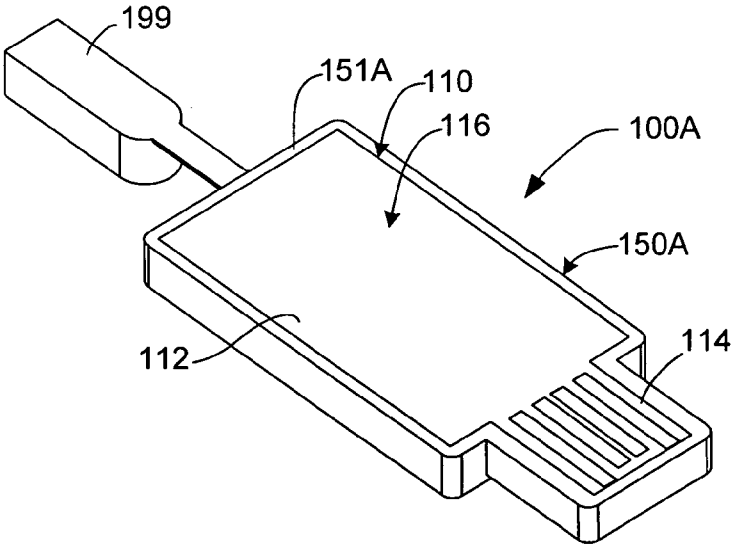

FIG. 5

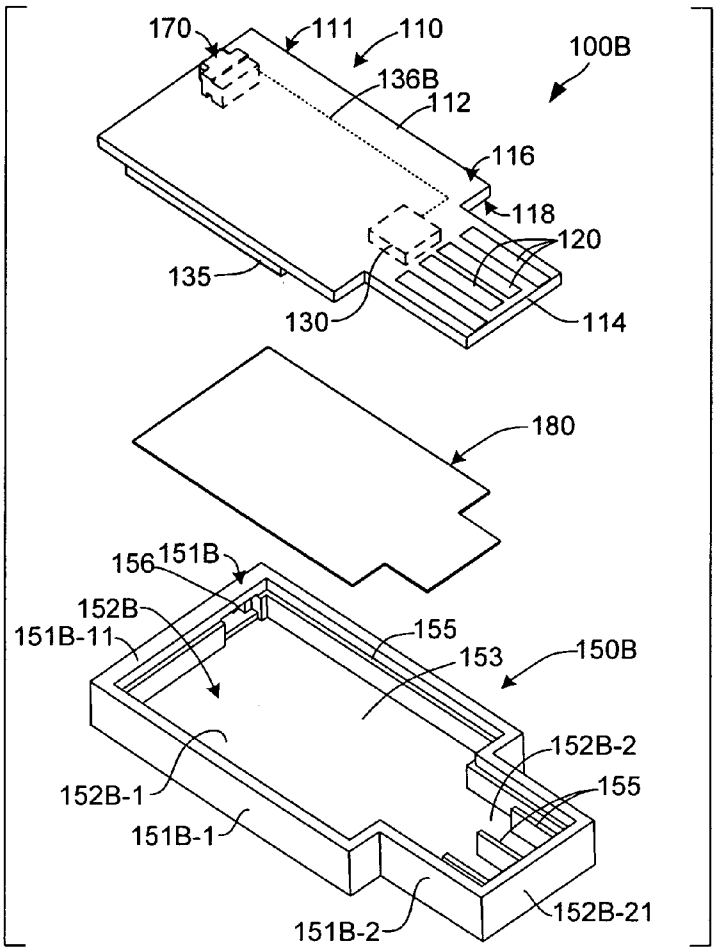

FIG. 6(A)

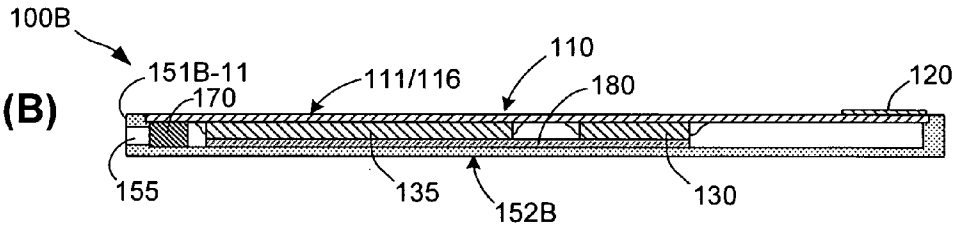

FIG. 6(B)

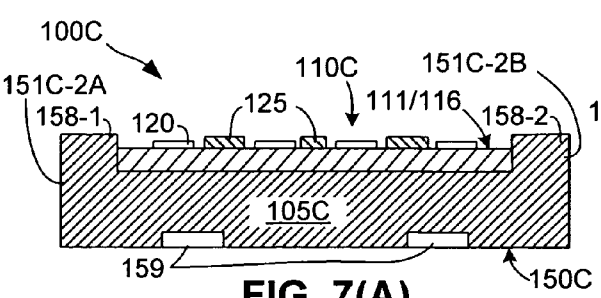

FIG. 7(A)

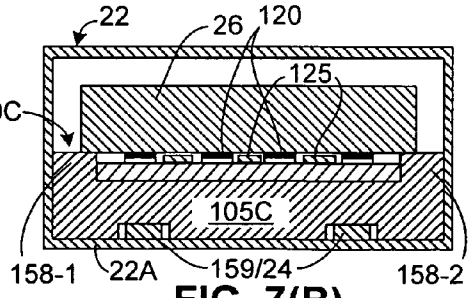

FIG. 7(B)

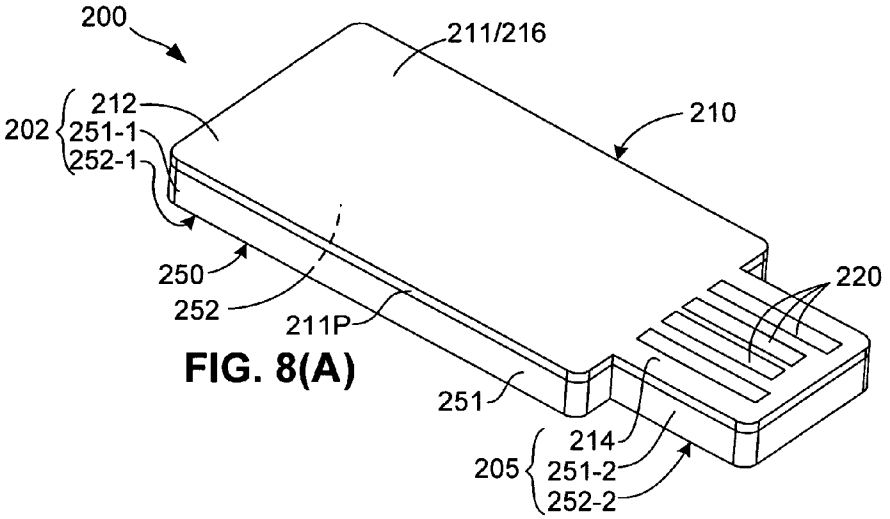

FIG. 8(A)

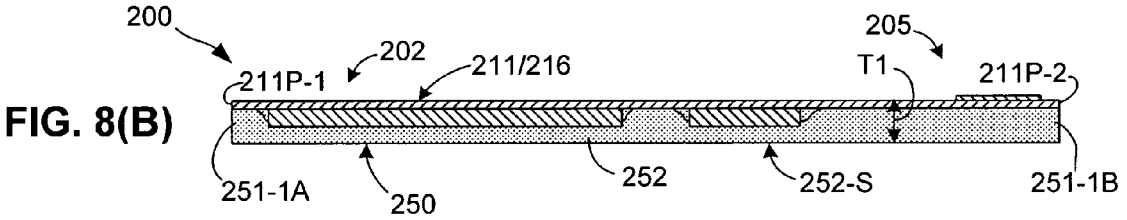

FIG. 8(B)

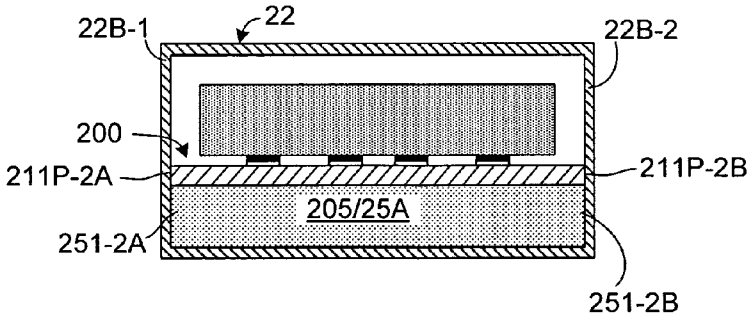

FIG. 9

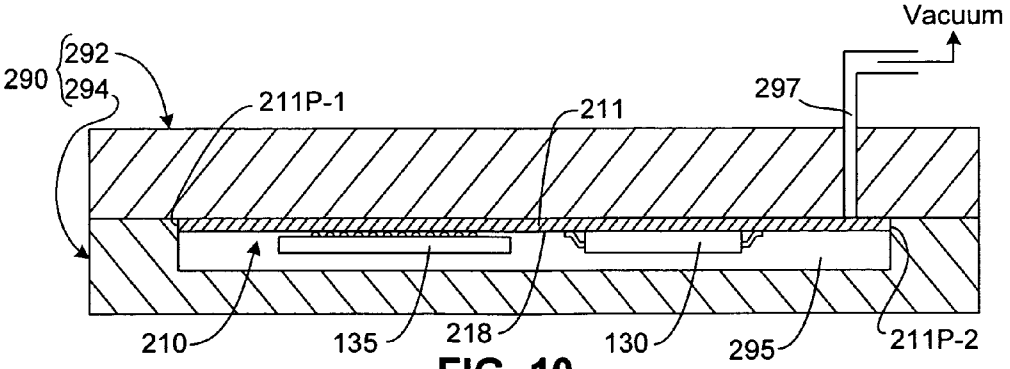

FIG. 10

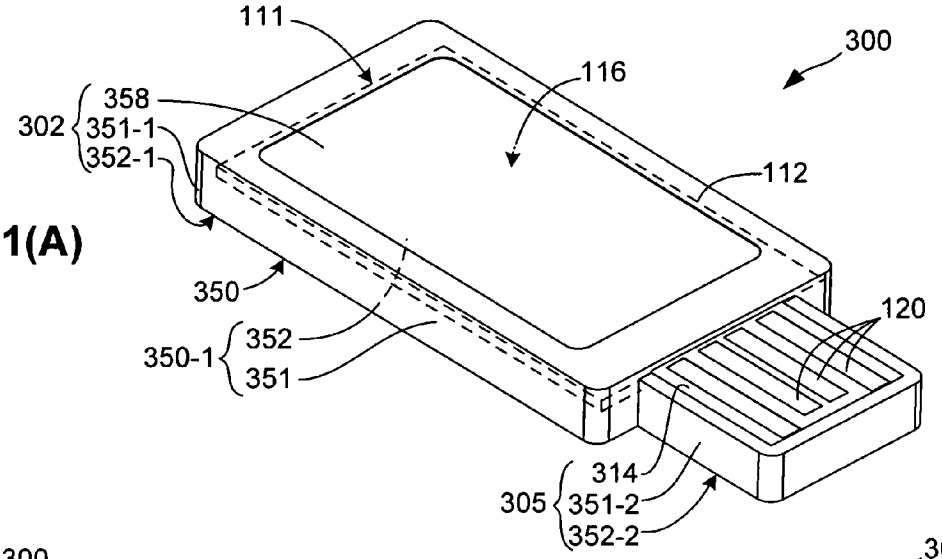

FIG. 11(A)

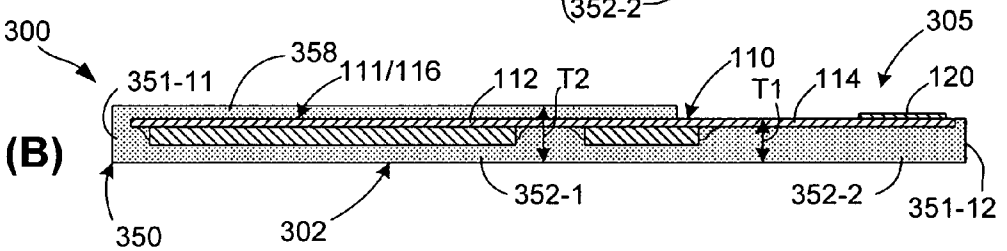

FIG. 11(B)

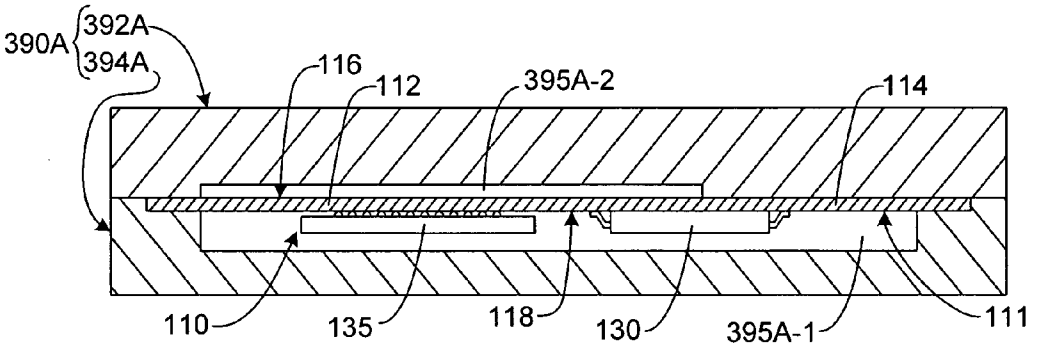

FIG. 12

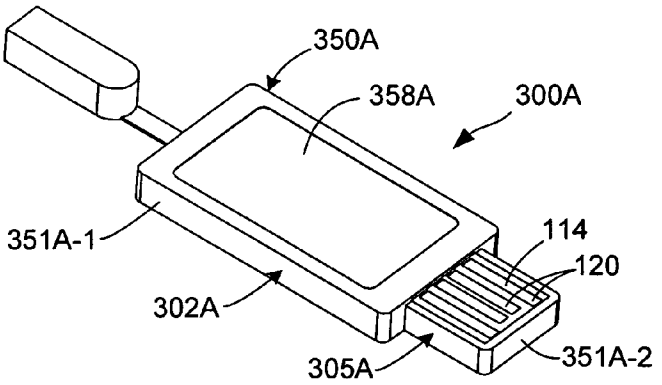

FIG. 13

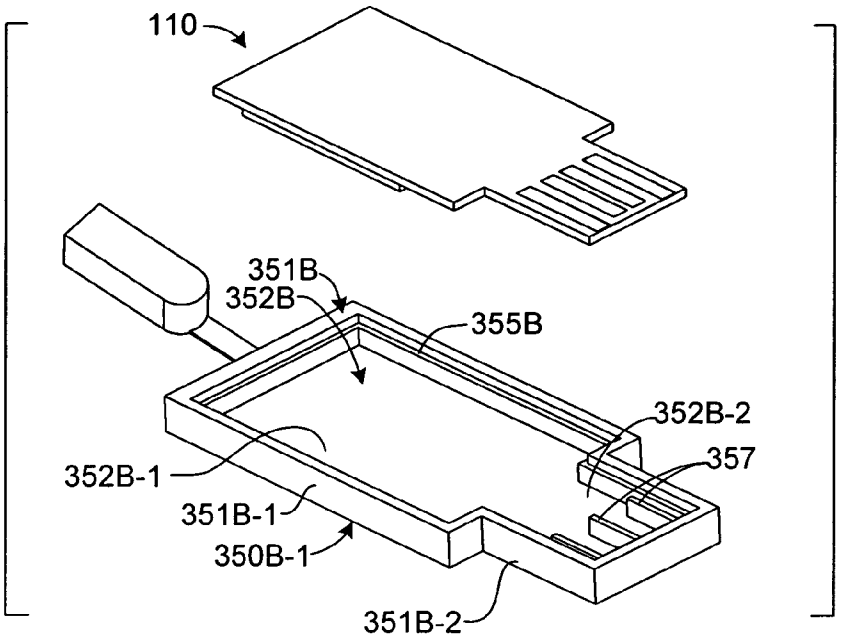

FIG. 14

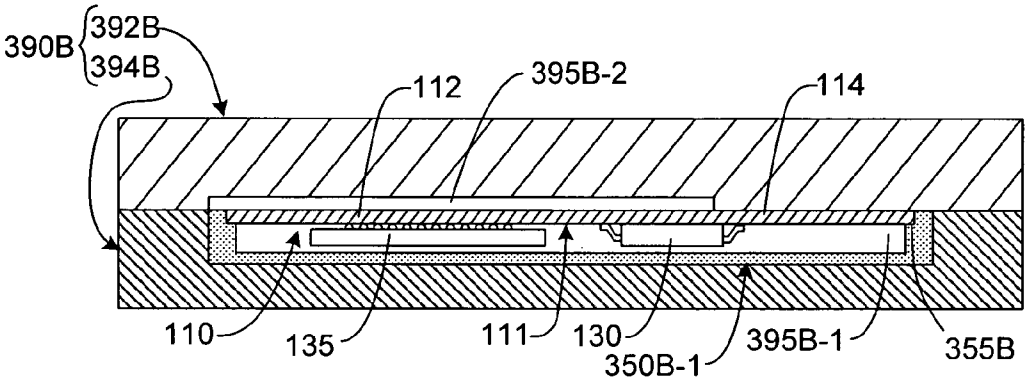

FIG. 15

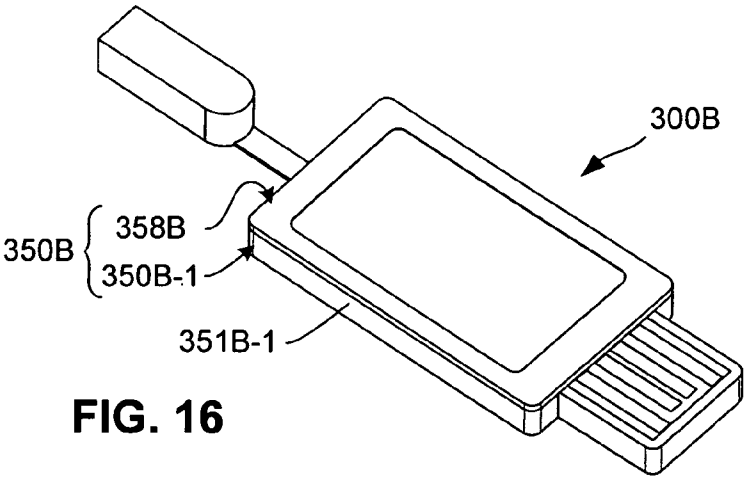

FIG. 16

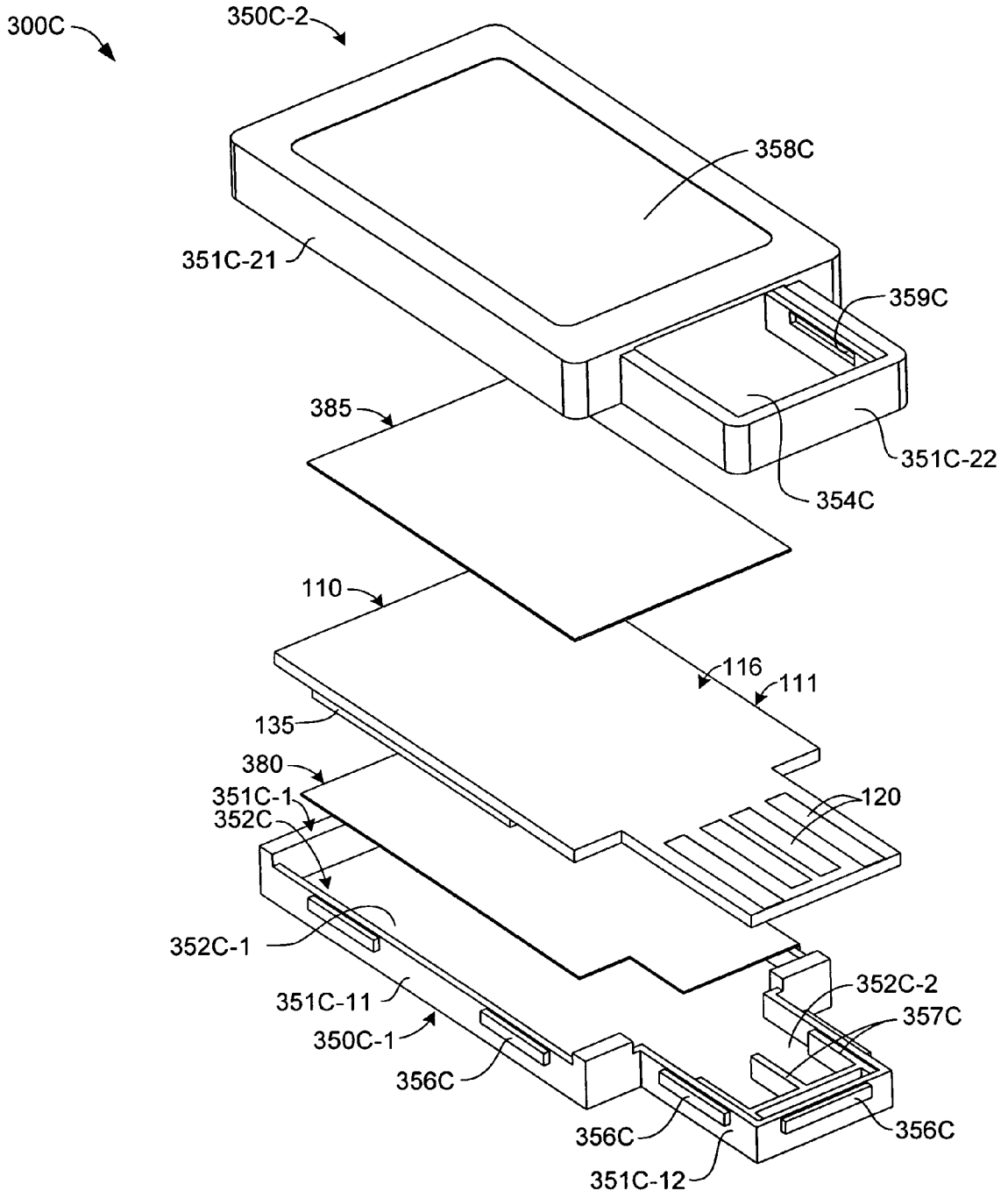
300C
350C-2
358C
351C-21
359C
385
351C-22
354C
110
116
111
135
380
351C-1
352C
120
352C-1
352C-2
351C-11
357C
350C-1
356C
356C
356C
351C-12

FIG. 17

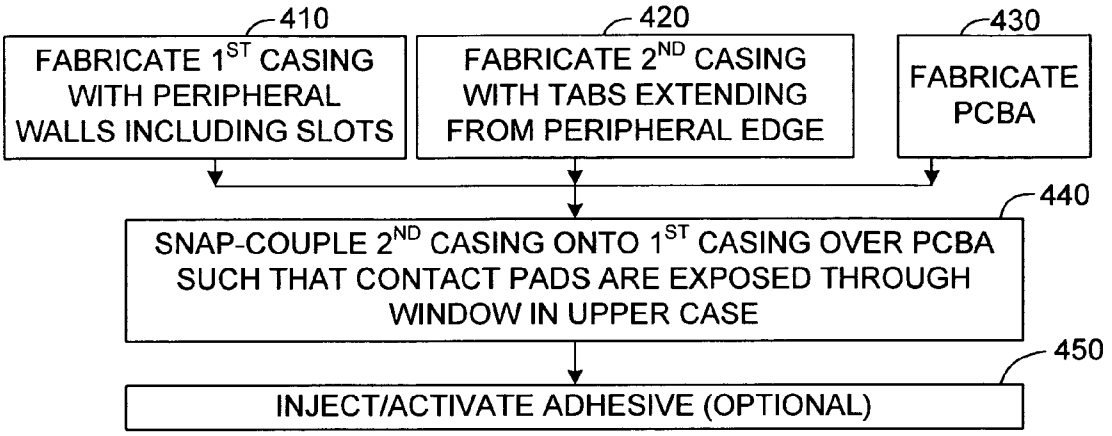

FIG. 18

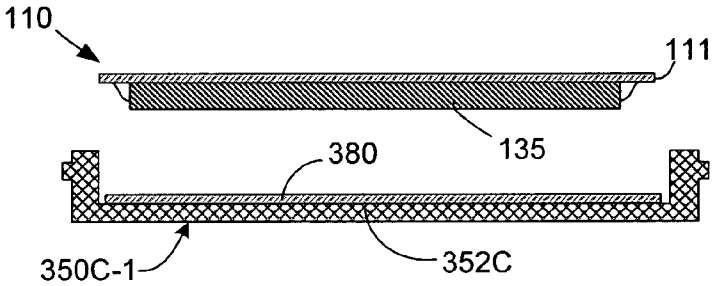

FIG. 19(A)

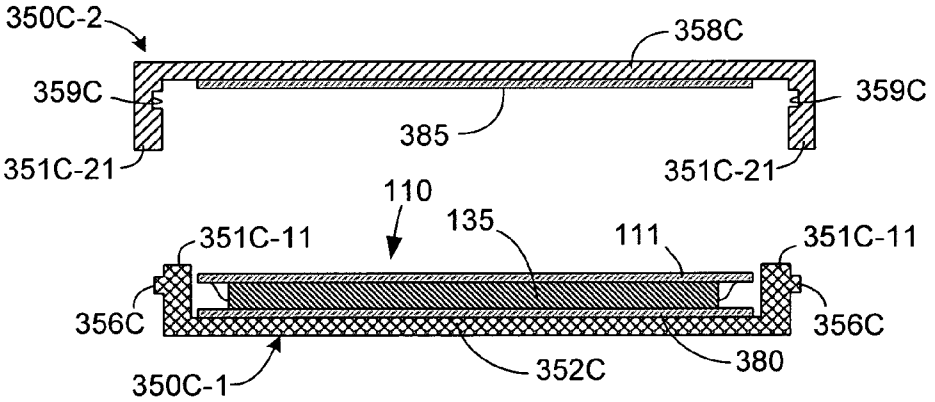

FIG. 19(B)

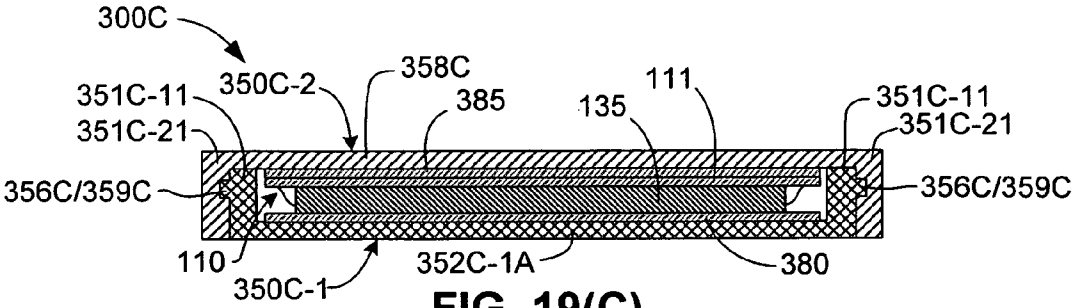

FIG. 19(C)

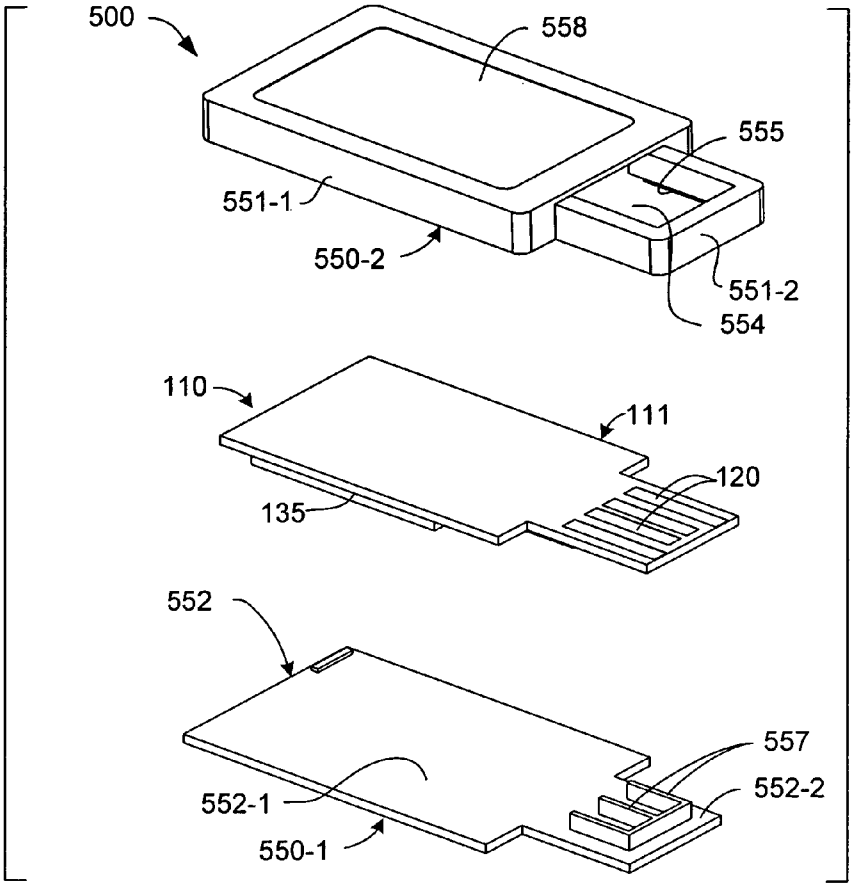

FIG. 20

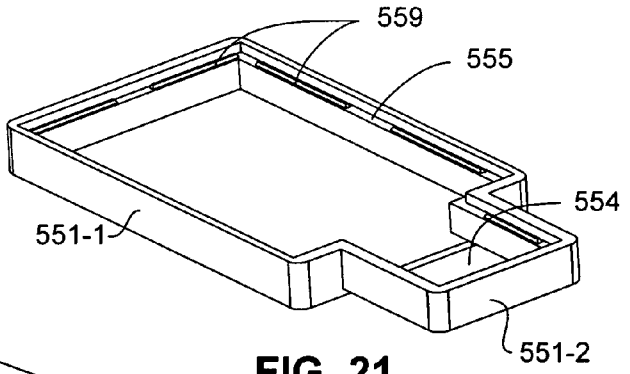

FIG. 21

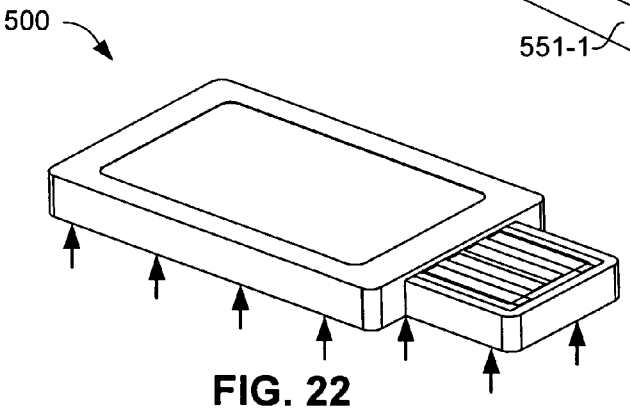

FIG. 22

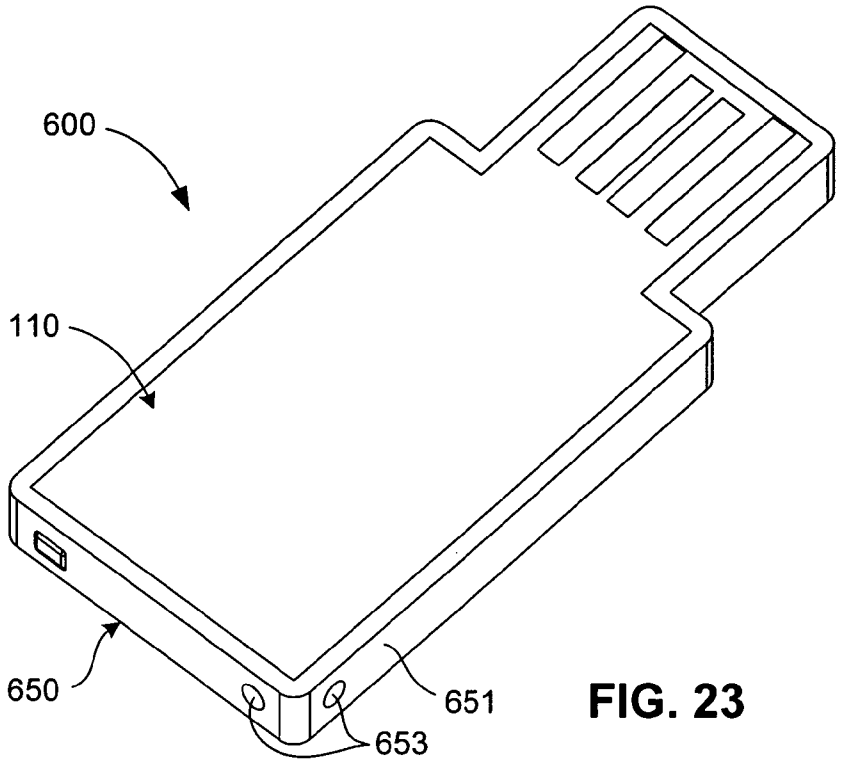

FIG. 23

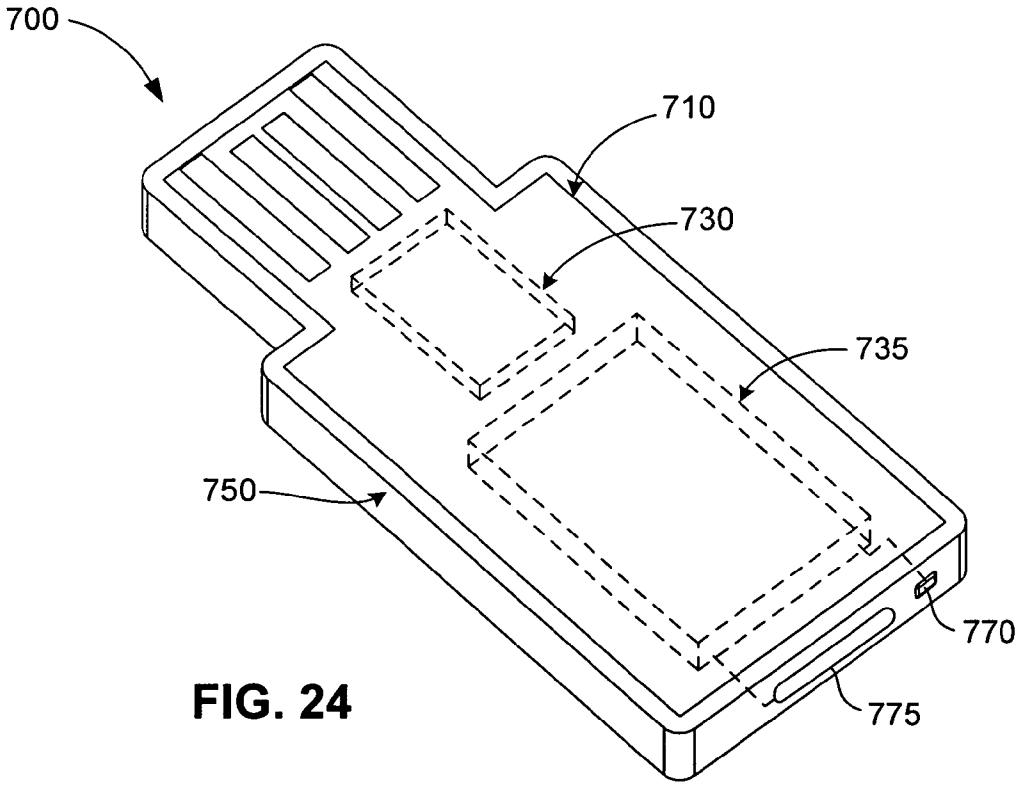

FIG. 24

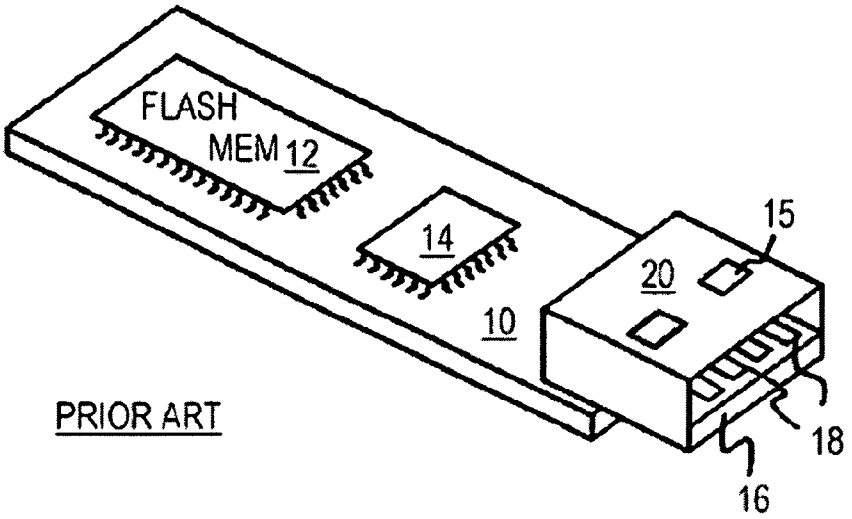

PRIOR ART

FIG. 25(A)

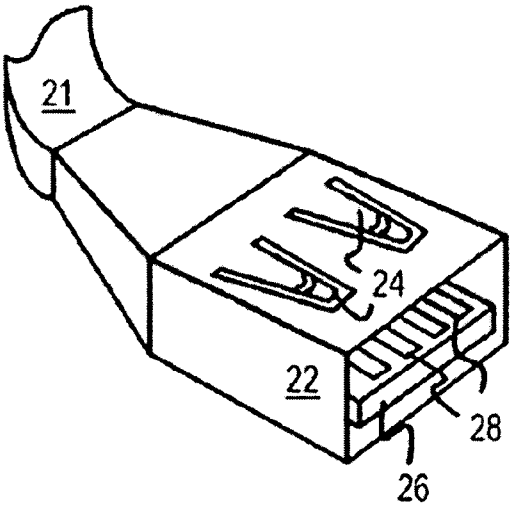

PRIOR ART

FIG. 25(B)

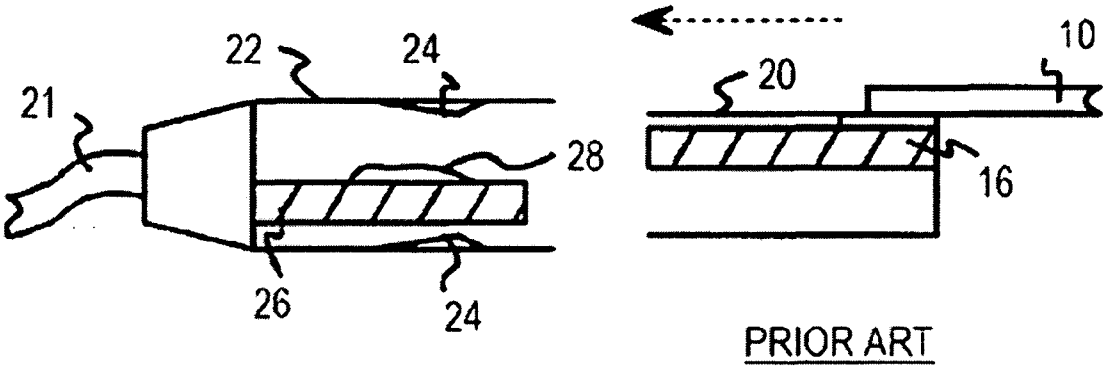

FIG. 26(A)

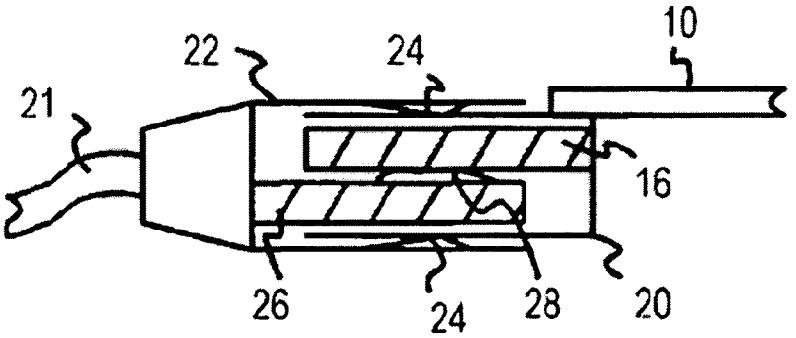

PRIOR ART

FIG. 26(B)

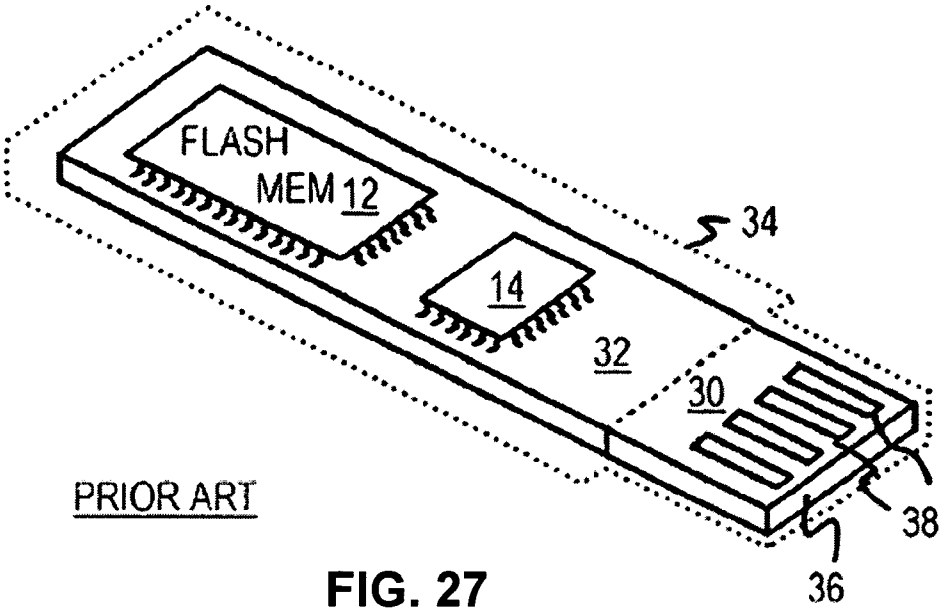

FIG. 27

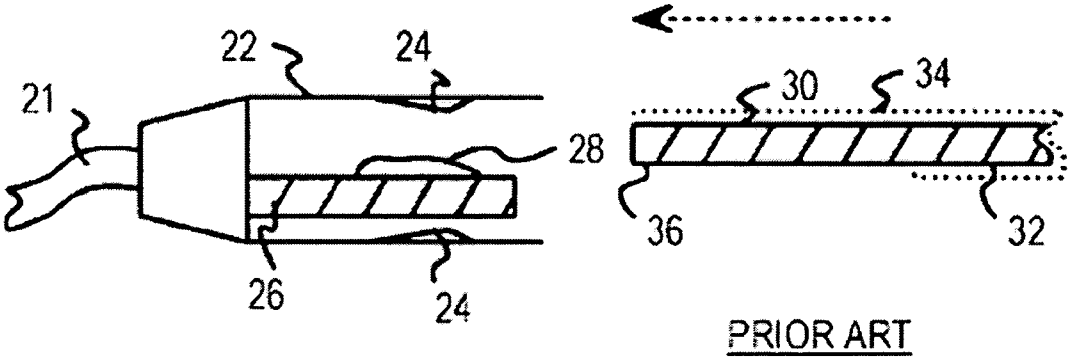

FIG. 28(A)

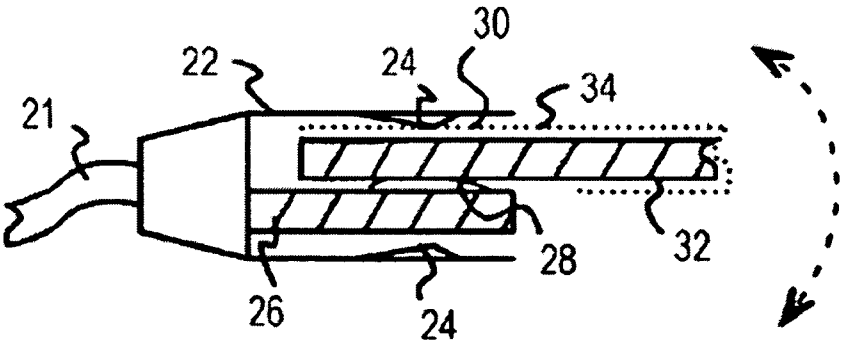

FIG. 28(B)

LOW-PROFILE USB DEVICE

FIELD OF THE INVENTION

This invention relates to portable electronic devices, and more particularly to portable electronic devices that utilize the Universal-Serial-Bus (USB) specification.

BACKGROUND OF THE INVENTION

Rapid advances in technology in several areas have converged to enable small, portable memory cards with vast capacities. Flash memory technologies such as those using electrically-erasable programmable read-only memory (EEPROM) have produced chips storing 128 M-Bytes or more. Small flash-memory cards have been designed that have a connector that can plug into a specialized reader, such as for compact-flash, secure-digital, memory stick, or other standardized formats.

More recently, flash memory cards are being sold that contain a USB connector. Such USB-flash memory cards do not require a specialized reader but can be plugged into a USB connector on a host system, such as a personal computer (PC). These USB-flash memory cards can be used in place of floppy disks. A USB-flash card can have a capacity of more than ten floppy disks in an area not much larger than a large postage stamp.

FIG. **25**(A) shows a prior-art flash-memory card with a conventional male USB connector. Flash memory chip **12** may be a 128 Mega-byte non-volatile chip or may have some other capacity. Controller chip **14** contains a flash-memory controller that generates signals to access memory locations within flash memory chip **12**. Controller chip **14** also contains a USB interface controller that serially transfers data to and from flash memory chip **12** over a USB connection.

Male USB connector **20** may be mounted on board **10**, which is a small circuit board with chips **12**, **14** mounted thereon. Multi-layer printed-circuit board (PCB) technology can be used for board **10**. A plastic case (not shown) can surround board **10**.

Male USB connector **20** contains a small connector substrate **16**, which is often white ceramic, black rigid plastic, or another sturdy substrate. Connector substrate **16** has four or more metal contacts **18** formed thereon. Metal contacts **18** carry the USB signals generated or received by controller chip **14**. USB signals include power, ground, and serial differential data D+, D−.

Male USB connector **20** contains a metal case that wraps around connector substrate **16**. The metal case touches connector substrate **16** on three of the sides of connector substrate **16**. The top side of connector substrate **16**, holding metal contacts **18**, has a large gap to the top of the metal case. On the top and bottom of this metal wrap are formed holes **15**. USB connector **20** is a type-A USB connector.

FIG. **25**(B) shows a female USB socket connector **22**. Female USB socket connector **22** can be an integral part of a PC or other host system, or can be connected by cable **21** to such a host system. Another connector substrate **26** contains four metal contacts **28** that make electrical contact with the four metal contacts **18** of the male USB connector **20** of FIG. **25**(A). Connector substrate **26** is wrapped by a metal case, but small gaps are between the metal case and connector substrate **26** on the lower three sides.

Locking is provided by metal springs **24** in the top and bottom of the metal case. When male USB connector **20** of FIG. **25**(A) is flipped over and inserted into female USB socket connector **22** of FIG. **25**(B), metal springs **24** lock into holes **15** of male USB connector **20**.

FIGS. **26**(A) and **26**(B) are cross-sections highlighting connections between male and female USB connectors. Female USB socket connector **22** is on the left while male USB connector **20** is being inserted from the right. Male USB connector **20** is flipped over relative to the view of FIG. **25**(A). Metal contacts **18** are formed on the lower surface of connector substrate **16** on male USB connector **20**, while metal contacts **28** are formed on the upper surface of connector substrate **26** on female USB socket connector **22**. Thus the metal contacts face one another to allow for electrical contact when male USB connector **20** is inserted into female USB socket connector **22** as shown in FIG. **26**(B).

Metal springs **24** formed on the metal case surrounding connector substrate **26** on female USB socket connector **22** fit into holes on the metal case of male USB connector **20**. This helps to lock the connectors together.

FIG. **27** shows a prior-art USB flash memory card using a low-profile USB connector. Male USB connector **20** of FIGS. **25** and **26** is relatively large. The metal case in particular is cumbersome and increases manufacturing cost. Costs may be reduced by integrating male USB connector **30** with board **32**. Board **32** is a PCB that has flash memory chip **12** and controller chip **14** mounted thereon. Board **32** is extended to include male USB connector **30**, which has metal contacts **38** formed on end **36** of board **32**.

The width and thickness of board **32** at end **36** containing male USB connector **30** is designed to approximately match that of connector substrate **16** of FIG. **25**(A). Plastic case **34** can enclose board **32** but have an opening for metal contacts **38**. Plastic case **34** can cover the bottom and sides of male USB connector **30** up to end **36** to emulate potions of the metal case of the male USB connector of FIG. **25**(A).

FIGS. **28**(A) and **28**(B) show cross-sections of the prior-art low-profile USB connector being inserted into a standard female USB connector. Board **32** that has male USB connector **30** formed on end **36** is flipped over from the view shown in FIG. **27**, and end **36** is inserted into female USB socket connector **22** from the right side.

Metal contacts **38** are located on the lower surface of male USB connector **30**. Plastic case **34** has an opening on the lower surface of male USB connector **30** to expose the metal contacts so they can make electrical connection with metal contacts **28** on the upper surface of connector substrate **26** of female USB socket connector **22** when inserted as shown in FIG. **28**(B).

Plastic case **34** helps to fill the gate between board **32** and the top edge of the metal case of female USB socket connector **22**. However, no holes are provided in plastic case **34**, so metal springs **24** are pushed up slightly when male USB connector **30** is inserted into female USB socket connector **22**. Plastic case **34** is also formed along the thin edges of board **32** and helps to fill in the gaps between connector substrate **26** and the sides of the metal case of female USB socket connector **22** that are above and below the plane of FIG. **28**(B).

While low-profile USB connector **30** can be less expensive and smaller than the standard USB connector, it still has an undesirable thickness. The lack of the metal case facilitates some reduction in size at the plug end, but conventional fabrication processes mount the USB ICs on the same side of the PCB as the metal contacts, thus producing a body (handle) that is relatively thick.

What is needed is a substantially flat, low-profile male USB device having a minimal handle thickness, thus facili-

tating extremely thin USB devices that can be incorporated into pocket-carried items, such as key chains and pocket utility tools. What is also needed is a method for manufacturing such low-profile USB devices.

SUMMARY OF THE INVENTION

The present invention is directed to a low-profile USB device in which the thickness of the USB device's handle structure is substantially equal to and coplanar with a low-profile "(half-height") thickness of the USB device's plug structure. The low-profile plug structure thickness is determined by the plug receiving space located between the metal contacts and metal casing of a standard female USB socket connector, and the plug structure also has a width that is equal to the corresponding width of the plug receiving space defined by the standard female USB socket connector, thereby facilitating a snug (secure) fit between the plug structure and the standard female USB socket connector. To minimize the overall thickness of the USB device to the thickness of the plug structure, a PCBA is provided that includes metal contacts formed on a first (e.g., upper) surface of a PCB, and all IC components (e.g., USB controller chip, flash memory chip, etc.) mounted on the opposite (e.g., lower) surface of the PCB. A housing is then mounted or otherwise formed over the IC components (i.e., over the lower surface of the PCBA) that includes a plug section extending opposite to the metal contacts to provide the necessary plug structure thickness, and a handle section that covers the IC components. The housing has a planar cover plate that is parallel to the PCB and extends along the entire length of the USB device (e.g., from a front edge of the plug structure to a rear edge of the handle structure). Accordingly, the thickness of the handle structure is made substantially equal to the plug structure thickness, which is required for secure and reliable connection to a standard female USB socket connector, thus producing a flat, low-profile (thin) structure that can be easily carried in a user's pocket, or incorporated into a utility tool.

BRIEF DESCRIPTION OF THE DRAWINGS

These and other features, aspects and advantages of the present invention will become better understood with regard to the following description, appended claims, and accompanying drawings, where:

FIGS. **1**(A) and **1**(B) are perspective and cross sectional side views showing an exemplary USB device according to an embodiment of the present invention;

FIGS. **2**(A) and **2**(B) are cross-sectional end views showing a standard female USB socket connector and the plug structure of the USB device of FIG. **1**(A) in separated and assembled conditions, respectively;

FIG. **3** is a perspective view showing a printed circuit board assembly (PCBA) of the USB device shown in FIG. **1**(A);

FIG. **4** is a cross-sectional side view showing a simplified plastic molding apparatus for producing the USB device shown in FIG. **1**(A) according to another embodiment of the present invention;

FIG. **5** is a perspective view showing a molded USB device produced by the plastic molding apparatus of FIG. **4**;

FIGS. **6**(A) and **6**(B) are exploded perspective and cross-sectional side views showing a USB device according to another embodiment of the present invention;

FIGS. **7**(A) and **7**(B) are cross-sectional end views showing a standard female USB socket connector and the plug structure of an USB device according to another embodiment of the present invention;

FIGS. **8**(A) and **8**(B) are exploded perspective and cross-sectional side views showing a USB device according to another embodiment of the present invention;

FIG. **9** is a cross-sectional end view showing the plug structure of the USB device of FIG. **8**(A) inserted inside a standard female USB socket connector;

FIG. **10** is a cross-sectional side view showing a simplified plastic molding apparatus for producing the USB device shown in FIG. **8**(A) according to another embodiment of the present invention;

FIGS. **11**(A) and **11**(B) are exploded perspective and cross-sectional side views showing a USB device according to another embodiment of the present invention;

FIG. **12** is a cross-sectional side view showing a simplified plastic molding apparatus for producing the USB device shown in FIG. **11**(A) according to another embodiment of the present invention;

FIG. **13** is a perspective view showing a molded USB device produced by the plastic molding apparatus of FIG. **12**;

FIG. **14** is an exploded perspective view showing a partially assembled USB device according to another embodiment of the present invention;

FIG. **15** is a cross-sectional side view showing a simplified plastic molding apparatus for completing the production of the USB device shown in FIG. **14** according to another embodiment of the present invention;

FIG. **16** is a perspective view showing the completed USB device produced by the plastic molding apparatus of FIG. **15**;

FIG. **17** is an exploded perspective view showing an USB device according to another embodiment of the present invention;

FIG. **18** is a flow diagram showing a method for assembling the USB device of FIG. **17** according to another embodiment of the present invention;

FIGS. **19**(A), **19**(B) and **19**(C) are cross-sectional end views depicting the USB device of FIG. **17** during successive assembly stages;

FIG. **20** is an exploded perspective view showing an USB device according to another embodiment of the present invention;

FIG. **21** is a perspective bottom view showing the upper housing structure of the USB device shown in FIG. **20**;

FIG. **22** is a perspective view depicting an ultrasonic welding process utilized to complete fabrication of the USB device shown in FIG. **20**;

FIG. **23** is a perspective view showing a keychain-type USB device produced in accordance with another embodiment of the present invention;

FIG. **24** is a perspective view showing a wireless communication-type USB device produced in accordance with another embodiment of the present invention;

FIG. **25**(A) shows a prior-art flash-memory card with a USB connector;

FIG. **25**(B) shows a female USB connector;

FIGS. **26**(A) and **26**(B) are cross-sections highlighting connections between male and female USB connectors;

FIG. **27** shows a prior-art USB flash memory card using a low-profile USB connector; and

FIGS. **28**(A) and **28**(B) show cross-sections of the prior-art low-profile USB connector being inserted into a standard female USB connector.

DETAILED DESCRIPTION OF THE DRAWINGS

The present invention relates to an improvement in low-profile USB connectors. The following description is presented to enable one of ordinary skill in the art to make and use the invention as provided in the context of a particular application and its requirements. As used herein, the terms "upper", "upwards", "lower", and "downward" are intended to provide relative positions for purposes of description, and are not intended to designate an absolute frame of reference. Various modifications to the preferred embodiment will be apparent to those with skill in the art, and the general principles defined herein may be applied to other embodiments. Therefore, the present invention is not intended to be limited to the particular embodiments shown and described, but is to be accorded the widest scope consistent with the principles and novel features herein disclosed.

FIGS. **1**(A) and **1**(B) are exploded and assembled perspective views showing a low-profile Universal-Serial-Bus (USB) device **100** according to a first embodiment of the present invention. USB device **100** generally includes a printed circuit board assembly (PCBA) **110** and a plastic housing **150** that is fixedly mounted onto PCBA **110**.

Referring to the upper portion of FIG. **1**(A) and to FIG. **3**, PCBA **110** includes a printed circuit board (PCB) **111** including a relatively wide PCB handle section **112** and a relatively narrow PCB plug section **114** that extends from a front end of PCB handle section **112**. PCB **111** is a substantially flat substrate, and has opposing sides that are referred to below as upper (first) surface **116** and lower (second) surface **118**. Formed on upper surface **116** in plug section **114** are a plurality of metal contacts **120**. Metal contacts **120** are shaped and arranged in a pattern established by the USB specification. According to an aspect of the invention, at least one control integrated circuit (IC) **130** and zero or more auxiliary ICs **135** (e.g., a flash memory device or an RF communication circuit) are mounted solely on lower surface **118** (i.e., on the side of PCB **111** opposite to metal contacts **120**). ICs **130** and **135** are electrically connected to each other and to metal contacts **120** by way of metal traces **131** and **136**, a few of which being depicted in FIG. **1**(A) in a simplified manner by dashed lines. PCB **111** is formed in accordance with known PCB manufacturing techniques such that metal contacts **120** and ICs **130** and **135** (as well as zero or more other circuit components, which are omitted for brevity) are electrically interconnected by a predefined network including conductive traces **131** and **136** and other conducting structures that are sandwiched between multiple layers of an insulating material (e.g., FR4) and adhesive.

Housing **150** is arranged such that substantially all of the plastic used to form housing **150** is located below upper surface **116** of PCB **111**. Housing **150** includes a peripheral wall **151** extending downward, perpendicular to PCB **111**, and a lower cover plate **152** that extends parallel to PCB **111**. For discussion purposes, the portion of peripheral wall **151** surrounding handle section **112** of PCB **111** is referred to below as handle wall section **151-1**, and the section of peripheral wall **151** surrounding plug section **114** of PCB **111** is referred to below as plug wall section **151-2**. Similarly, the portion of cover plate **152** covering handle section **112** of PCB **111** is referred to below as handle cover section **152-1**, and the section of cover plate **152** covering plug section **114** of PCB **111** is referred to below as plug cover section **152-2**.

Referring again to FIG. **1**(A), a handle structure **102** of USB device **100** is formed by handle wall section **151-1**, handle cover section **152-1**, and the exposed upper surface **116** of PCB handle section **112**. Similarly, a plug structure **105** of USB device **100** is formed by plug wall section **151-2**, plug cover section **152-2**, and the exposed upper surface **116** of PCB plug section **114**.

Referring to FIGS. **2**(A) and **2**(B), a thickness T**1** and width W**1** of plug structure **105** is selected to produce a secure (snug) fit inside standard female USB socket connector **22** (described above). Referring to FIG. **2**(A), a height H between metal contacts **28** (i.e., a lower surface of connector substrate **26**) and a lower wall **23**A of the surrounding metal case is set by the USB standard at approximately 2.5 mm. Thickness T**1** is set, for example, at 2.4 mm to assure a snug fit of plug structure **105** inside lower region **25**A of female USB socket connector **22** (i.e., without significant vertical wobble) with metal contacts **120** in secure electrical contact with metal contacts **28** (as indicated in FIG. **2**(B). Similarly, a width W between side walls **23**B-**1** and **23**B-**2** of the metal case is set by the USB standard at approximately 12.5 mm. Width W**2** of plug structure **105** (i.e., between the outermost surfaces of side walls **151-2**A and **151-2**B) is set, for example, at 12 mm to further assure the snug fit of plug structure **105** inside lower region **25**A of female USB socket connector **22**. Note that plug structure **105** is referred to as "low-profile" and "half-height" herein in that plug structure **105** is only inserted into lower region **25**A of female USB socket connector **22** (i.e., side regions **25**B-**1** and **25**B-**2** and upper region **25**C, which are normally occupied by the metal case of a standard male USB plug connector, remain unoccupied by low-profile plug structure **105**).

According to the present invention, lower cover plate **152** includes a planar surface **152**-S that is parallel to the PCB, and defines a single plane such that a first thickness T**1** of plug structure **105** (i.e., measured between upper PCB surface **116** and planar surface **152**S adjacent to metal contacts **120**) is substantially equal to a second thickness T**2** of handle section **102** (i.e., measured between upper PCB surface **116** and planar surface **152** adjacent to IC **135**. That is, as indicated in FIG. **1**(B), USB device **100** is substantially flat along its entire length (i.e., from rear edge **151-1**A to front edge **151-1**B). The term "substantially flat" is meant to indicate that planar surface **152**S is substantially parallel to an uppermost surface of USB device **100** along its entire length. In the embodiment shown in FIGS. **1**(A) and **1**(B), the uppermost surface of USB device **100** is defined in part by upper surface **116** of PCB **111**, which is parallel to planar surface **152** along the entire length of USB **100**. Similarly, the term "substantially flat" is also intended to cover embodiments described below in which the housing includes a thin wall structure that is formed on or otherwise contacts the upper surface of the PCB. In these embodiments, the thickness T**2** of handle structure **102** may differ by a small amount (e.g., 5% from thickness T**1** of plug structure **105**.

According to an aspect of the present invention, the "flatness" associated with USB device **100** is achieved by mounting all of the IC "chips" and other electronic components of USB device **100** on lower surface **118** of PCB **111** (i.e., on the side opposite to metal contacts **120**). That is, the minimum overall thickness of USB device **100** is determined by the thickness T**1**, which is required to maintain a snug connection between plug structure **105** and female USB socket connector **22** (as indicated in FIG. **2**(B)). Because this arrangement requires that metal contacts **120** be located at the uppermost surface, and that plug wall section **151-2** plug and cover section **152-2** extend a predetermined distance below PCB **111** to provide the required thickness T**1**. Thus, the overall thickness of USB device **100**

can be minimized by mounting the ICs **130** and **135** only on lower surface **118** of PCB **111**. That is, if the ICs are mounted on upper surface **116**, then the overall thickness of the resulting USB structure would be the required thickness T**1** plus the thickness that the ICs extend above PCB **111** (plus the thickness of a protective wall, if used).

According to another aspect associated with the embodiment shown in FIGS. **1**(A) and **1**(B), upper surface **116** of PCB **111** is entirely exposed on the upper surface of USB device **100**, thus facilitating the production of USB **100** with a maximum thickness equal to thickness T**1** of plug structure **105**. That is, because metal contacts **120** are formed on upper surface **116**, and upper surface **116** defines the higher end of required plug structure thickness T**1**, the overall height of USB device **100** can be minimized by exposing upper surface **116** (i.e., by making any point on upper PCB surface **116** the uppermost point of USB device **100**). As indicated in FIG. **1**(A), in accordance with feature specifically associated with USB device **100**, peripheral wall **151** extends around and covers the peripheral side edges of PCB **111**, and an upper edge of peripheral wall **151** is coplanar with upper surface **116** of PCB **111**. By covering the peripheral side edge of PCB **111**, peripheral wall **151** prevents objects from wedging between PCB **111** and housing **150**, thereby preventing undesirable separation of PCBA **110** from housing **150**.

Referring again to FIG. **3**, in accordance with another aspect of the present invention, PCBA **110** is fabricated using lead-free soldering materials and processes. Lead (Pb) is recognized as a hazardous material, and may at some point in time be banned from use. Conventional USB structures that utilize standard USB plug connectors typically require lead-based soldering methods to attach the standard plug structure to a plastic substrate. Lead-free soldering requires higher peak temperatures (about 240° C.) that can shrink or warp such plastic substrates, thereby making such conventional USB plug connector structures unsuitable for lead-free fabrication processes. In contrast, because metal contacts **120** are formed directly on PCB **111**, which is formed, for example, using FR4. In addition, ICs **130** and **135** are provided as surface mount components that don't contain lead in their pins/balls, thereby further enabling lead-free fabrication. After the lead-free PCBA fabrication process is completed, plastic housing **150** is formed and/or assembled onto PCBA **110** according to the various specific embodiments described below to complete the manufacture of low-profile USB device **100**.

FIG. **4** is a cross-sectional side view showing a simplified plastic molding apparatus **190** for producing a USB device according to another embodiment of the present invention. Plastic molding apparatus **190** includes an upper die structure **192** and a lower die structure **194** that define a cavity **195** therebetween. As indicated in FIG. **4**, PCBA **110** is held inside cavity **195** by way of a vacuum mechanism **197**, and then cavity **195** is filled with molten plastic material according to known plastic molding techniques. Note that PCB **111** is held such that upper surface **116** (and, hence, metal contacts **120**) are pressed against upper die structure **192**, thereby preventing the formation of molded plastic on these surfaces. As indicated in FIG. **4**, as the injected molten plastic fills chamber **195**, plastic material is formed directly on ICs **130** and **135**, as well as on exposed portions of lower surface **118**, thereby securing the resulting molded housing structure to PCBA **110**. Note also that, by providing gaps between the peripheral edges of PCB **111** and the walls of chamber **195**, molten plastic flows against these peripheral edges to form peripheral walls **151**A (shown in FIG. **5**). FIG. **5** shows an USB device **100**A including a plastic housing **150**A, along with a sprue **199**, that are produced by molding apparatus **190**. Note again that upper surface **116** of PCB **111**, including both handle section **112** and plug section **114**, are exposed through housing **150**A, which is substantially identical to the generalized housing **150** of FIG. **1**(A).

FIGS. **6**(A) and **6**(B) are exploded perspective and cross-sectional side views showing a USB device **100**B according to another specific embodiment of the present invention. USB device **100**B generally includes a plastic housing **150**B that is attached to PCBA **110** by way of an adhesive layer **180**.

Referring to the upper portion of FIG. **6**(A), PCBA **110** is essentially identical to the structures described above, but also includes a light-pipe (light-generating device) mounted onto lower surface **118** adjacent to a back edge of PCB **111**. Light-pipe **170** is controlled by a signal generated, for example by control IC **130** and transmitted over a trace **136**B according to known techniques.

Referring to the lower portion of FIG. **6**(A), housing **150**B includes a peripheral wall **151**B extending upward from a lower cover plate **152**B. Similar to housing **150** of the general embodiment (discussed above), peripheral wall **151**B includes a handle wall section **151**B-**1** and a plug wall section **151**B-**2**, and cover plate **152**B includes a handle cover section **152**B-**1** and a plug cover section **152**B-**2**. Formed in peripheral wall **151**B is a peripheral shelf **155** that supports the peripheral edge of PCB **111** when PCBA **110** is mounted onto housing **150**B. A back wall **151**B-**11** of housing **150**B defines an opening **156** that, when assembled, aligns with light-pipe **170** (as indicated in FIG. **6**(B)) such that light generated by light-pipe **170** is visible through housing **150**B. In addition, several support ribs **157** extend upward from plug cover section **152**B-**2** that, when assembled, contact and help support plug section **114** of PCB **111**. As indicated in FIG. **6**(B), when assembled, adhesive layer secures the lower surfaces of ICs **130** and **135** to the inside surface of cover plate **152**B.

FIGS. **7**(A) and **7**(B) are cross-sectional end views showing a plug structure **105**C of an USB device **100**C according to another embodiment of the present invention. USB device **100**C includes a housing **150**C and PCBA **110**C that are similar to the corresponding structures described above, with the following additional features and aspects.

According to a first aspect, housing **150**C includes peripheral wall sections **151**C-**2**A and **151**C-**2**B on each side of plug structure **105**C that respectively include end rail sections **158-1** and **158-2** that extend above upper surface **116** of PCB **111**. As indicated in FIG. **7**(B), end rail sections **158-1** and **158-2** are sized to press against the lower surface of connector substrate **26**. Although this arrangement increases the overall thickness of USB device **100**C, end rail sections **158-1** and **158-2** may provide a more secure engagement between plug structure **105**C and standard female USB socket connector **22** than the embodiments described above.

In accordance with another aspect, PCB **111** includes elongated metal dividers **125** formed on upper surface **116**, with each metal divider **125** being located between an adjacent pair of the metal contacts **120**. Metal dividers **125** increase the rigidity of plug structure **105**C, thus further enhancing the secure engagement between plug structure **105**C and standard female USB socket connector **22**.

In accordance with yet another aspect, one or more locking depressions **159** are formed in cover plate **152**C. As indicated in FIG. **7**(B), locking depressions **159** are aligned to engage with metal springs **24** protruding from bottom

wall **22**A of standard female USB socket connector **22**, thus further enhancing the snug engagement between plug structure **105**C and standard female USB socket connector **22**.

The end rails, dividers, and locking depressions described above with reference to USB device **100**C are described in additional detail in co-owned U.S. Pat. No. 6,854,984, which is incorporated herein by reference in its entirety. These features may be utilized alone or in combination, and may be included in any relevant embodiments disclosed herein.

FIGS. **8**(A) and **8**(B) are perspective and cross-sectional side views showing a USB device **200** according to another specific embodiment of the present invention. USB device **200** generally includes a PCBA **210** and a plastic housing **250** that is attached to a lower surface of PCBA **210**. PCBA **210** includes a PCB **211**, metal contacts **220**, and ICs (not shown) that are fabricated in essentially the same manner as described above with reference to PCBA **110**, but differs in that the PCB **211** is somewhat larger than PCB **111**. Housing **250** is also similar to housing **150** in that substantially all of the plastic used to form housing **250** is located below PCB **211**, but in this case housing **250** is formed entirely below PCB **211** (i.e., such that the peripheral edges **211**P of PCB **211** are exposed). Housing **250** includes a peripheral wall **251**, and a lower cover plate **252** that extends parallel to PCB **111**. Similar to the previous embodiments, a handle structure **202** is formed by a handle wall section **251-1**, a handle cover section **252-1**, and the exposed upper surface **216** of a PCB handle section **212**, and a plug structure **205** is formed by a plug wall section **251-2**, a plug cover section **252-2**, and the exposed upper surface **216** of a PCB plug section **214**. Also similar to the embodiments described above, as indicated in FIG. **8**(B), USB device **200** has a uniform thickness T**1** (measured from upper surface **216** of PCB **211** to the planar lower surface **252**-S of cover plate **252**) that extends along its entire length (i.e., from rear wall section **251-1**A to front wall section **251-1**B) plug structure **205** and handle structure **202**.

According to an aspect associated with USB device **200**, peripheral edge **211**P of PCB **211** extends to the outer edge of housing **250** such that peripheral edge **211**P is aligned vertically with peripheral wall **251** of housing **250**. For example, as shown in FIG. **8**(B), rear peripheral edge portion **211**P-**1** is aligned vertically with the outer surface of rear wall section **251-1**A, and front peripheral edge portion **211**P-**2** is aligned vertically with the outer surface of front wall section **251-1**B. Similarly, as shown in FIG. **9**, peripheral edge plug portions **211**P-**2**A and **211**P-**2**B are aligned vertically with the outer surfaces of wide plug wall sections **251-2**A and **251-2**B, respectively, such that peripheral edge plug portions **211**P-**2**A and **211**P-**2**B abut metal cage side walls **22**B-**1** and **22**B-**2** of standard female USB socket connector **22** when plug structure **205** is inserted into lower region **25**A in the manner described above.

FIG. **10** is a cross-sectional side view showing a simplified plastic molding apparatus **290** for producing USB device **200** according to another embodiment of the present invention. Plastic molding apparatus **290** includes an upper die structure **292** and a lower die structure **294** that define a cavity **295** therebetween. As indicated in FIG. **10**, PCBA **210** is held inside cavity **295** by way of a vacuum mechanism **297** with the peripheral edge of substrate **211** abutting or overlapping the peripheral edge of PCB **211** (e.g., rear peripheral edge portion **211**P-**1** and front peripheral edge portion **211**P-**2**), and then cavity **295** is filled with molten plastic material according to known plastic molding techniques. As indicated in FIG. **10**, as the injected molten plastic fills chamber **295**, plastic material is formed directly on ICs **130** and **135**, as well as on exposed portions of lower surface **218**, thereby securing the resulting molded housing structure to PCBA **210**.

FIGS. **11**(A) and **11**(B) are perspective and cross-sectional side views showing a USB device **300** according to another embodiment of the present invention. USB device **300** generally includes a plastic housing **350** that is attached to PCBA **110** (described above). Housing **350** includes a lower portion **350-1** formed by a peripheral wall **351** and a lower cover plate **352** that is similar to housing **150** (described above). In addition, housing **350** includes a thin plastic top plate **358** that is formed over upper surface **116** of handle section **112** of PCB **111** and integrally molded with or attached to peripheral wall **351**. Thus, a handle structure of USB device **300** includes a handle wall section **351-1** of peripheral wall **351**, a lower cover section **352-1**, and top plate **358**. Note that, similar to the embodiments described above, a plug structure **305** of USB device **300** includes a plug wall section **351-2** of peripheral wall **351**, a plug cover section **352-2** of lower cover plate **352**, and the exposed upper surface **116** of a PCB plug section **114**, thereby exposing metal contacts **120**.

As indicated in FIG. **11**(B), top plate **358** slightly increases the thickness of handle structure **302** over such that thickness T**2** is slightly greater than thickness T**1** of plug structure **305**. However, by forming top plate **358** using a thin layer of plastic that mounts directly on upper surface **116**, USB device **300** provides additional protection for PCBA **110** without significantly increasing the overall thickness of USB device **100**. In addition, the offset between the upper surface of top plate **358** and upper surface **116** of exposed PCB plug section **114** facilitates protection of metal contacts **120** when USB device **100** is incorporated, for example into a utility tool (such as a Swiss army knife-type assembly).

FIG. **12** is a cross-sectional side view showing a simplified plastic molding apparatus **390**A for producing a USB device **300**A according to another specific embodiment of the present invention. Plastic molding apparatus **390**A includes an upper die structure **392**A and a lower die structure **394**A that define a lower cavity **395**A-**1** located below ICs **130**/**135** and exposed portions of lower surface **118** of PCB **111**, and an upper cavity **395**A-**2** exposing upper surface **116** over handle section **112** (upper surface **116** over plug section **114** is covered by upper die structure **392**A in the manner and for the reasons described above). As indicated in FIG. **12**, PCBA **110** is held inside cavity **295** by way of panelization sections that are pinched between upper die structure **392**A and lower die structure **394**A. After placing PCBA **110** into plastic molding apparatus **390**A as indicated, cavities **395**A-**1** and **395**-A**2** are filled with molten plastic material according to known plastic molding techniques. As the injected molten plastic fills chambers **395**A-**1** and **395**A-**2**, plastic material is formed directly on ICs **130** and **135**, as well as on exposed portions of lower surface **118** and on upper surface **116** over handle section **112**, thereby securing the resulting molded housing structure to PCBA **110**. After the molding process, the resulting USB device is removed from plastic molding apparatus **390**A and any protruding panelization sections are trimmed. FIG. **13** shows an USB device **300**A including an integrally molded plastic housing **350**A that includes top plate **358**A integrally connected to upper edges of handle wall section **351**A-**1** that is produced by molding apparatus **390**A (described above). Note again

that upper surface **116** of PCB plug section **114** is exposed in plug structure **305**A to allow access to metal contacts **120** during operation.

FIG. **14** is an exploded perspective view showing portions of a USB device that are assembled using a two-step molding process according to another specific embodiment of the present invention. First, a pre-molded plastic housing portion **350**B-**1** is formed according to known plastic molding techniques for receiving PCBA **110** (described above). Housing portion **350**B-**1** includes a peripheral wall **351**B extending upward from a lower cover plate **352**B. Similar to housing **150**B (discussed above), peripheral wall **351**B includes a handle wall section **351**B-**1** and a plug wall section **351**B-**2** that define a peripheral shelf **355** for supporting the peripheral edge of PCB **111** when PCBA **110** is mounted onto housing portion **350**B-**1** during the two-step molding process. In addition, cover plate **352**B includes a handle cover section **352**B-**1** and a plug cover section **352**B-**2**. In addition, several support ribs **357** extend upward from plug cover section **352**B-**2** that, when assembled, contact and help support plug section **114** of PCB **111**.

FIG. **15** is a cross-sectional side view showing a simplified plastic molding apparatus **390**B for performing the second phase of the two-step molding process. Plastic molding apparatus **390**B includes an upper die structure **392**B defining an upper cavity **395**-B**2** and a lower die structure **394**B defining a lower cavity **395**-B**1**. As indicated in FIG. **15**, an assembly including lower housing portion **350**B-**1** and PCBA **110** is mounted into a lower cavity **395**B-**1** such that pre-molded plastic housing portion **350**B-**1** abuts the inside surface of lower die structure **394**B, and PCBA **110** is mounted on housing portion **350**B-**1** such that a peripheral edge of PCB **111** is supported by peripheral shelf **355**B. Upper die structure **392**B is then mounted over lower die structure **394**B such that upper cavity **395**B-**2** is formed over PCB handle portion **112**. Molten plastic material is then injected into upper cavity **395**B-**2** using known techniques, thereby forming an upper cover plate **358**B (shown in FIG. **16**). FIG. **16** shows a completed USB device **300**B including an integrally molded plastic housing **350**B that includes top plate **358**B integrally molded onto upper edges of handle wall section **351**B-**1** of lower housing portion **350**B-**1**.

FIG. **17** is an exploded perspective view showing an USB device **300**C according to another specific embodiment of the present invention. USB device **300**C generally includes a lower (first) housing portion **350**C-**1**, and upper (second) housing portion **350**C-**2**, PCBA **110**, a lower (first) adhesive layer **380**, and an upper (second) adhesive layer **385**.

Lower housing portion **350**C-**1** generally includes a lower (first) cover plate **352**C (including a handle cover section **352**C-**1** and a plug cover section **352**C-**2**) and an inner peripheral wall **351**C-**1** (including a handle wall section **351**C-**11** and a plug wall section **351**C-**12**) extending upward from (perpendicular to) opposing edges of cover plate **352**C. Several support ribs **357**C extend upward from plug cover section **352**B-**2** that, when assembled, contact and help support plug section **114** of PCB **111**.

Upper housing portion **350**C-**2** generally includes an outer peripheral wall **351**C-**2** (including a handle wall section **351**C-**21** and a plug wall section **351**C-**22**) that are sized to fit over inner peripheral wall **351**C-**1** in the manner described below, and a thin plastic top plate **358**C that is integrally formed on upper edges of handle wall section **351**C-**21**. Note that plug wall section **351**C-**22** defines an opening **354**C.

In accordance with an aspect of the present embodiment invention, lower housing portion **350**C-**1** and upper housing portion **350**C-**2** are fabricated such that the housing portions can be snap-coupled over PCBA **110** during the housing assembly process. In particular, the respective peripheral walls of housing portions **350**C-**1** and **350**C-**2** are constructed such that inner peripheral wall **351**C-**1** can be inserted inside peripheral wall **351**C-**2**, whereby the outside surfaces of peripheral wall **351**C-**1** abut the inside surfaces of peripheral wall **351**C-**2**. In addition, either a slot or a tab are provided on the outside surface of inner peripheral walls **351**-C**1**, and a corresponding tab or slot are provided on the inside surfaces of outer peripheral wall **351**C-**2**, wherein each tab is snap-coupled into a corresponding slot when upper housing portion **350**C-**1** is mounted onto the lower housing portion **350**C-**2**. In the present embodiment, the outside surfaces of peripheral walls **351**C-**1** of lower housing portion **350**C-**1** includes tabs **356**C, and the inside surfaces of peripheral walls **351**C-**2** of upper housing portion **350**C-**2** defines corresponding slots **359**C such that each tab **356**C is snap-coupled into a corresponding slot **359**C when upper housing portion **350**C-**2** is mounted onto lower housing portion **350**C-**1**. Note that the number of slots/tabs provided on each peripheral wall may be substantially arbitrarily selected, as well as the peripheral wall (inner or outer) on which the tabs/slots are provided.

According to another aspect of the present invention, adhesive layers **380** and **385** are respectively provided between a lower surface (e.g., the surface of IC **135** facing away from PCB **111**) and lower cover plate **352**C, and between an upper surface **116** of PCB **111** and top plate **358**C in order to substantially permanently secure the housing formed by lower housing portion **350**C-**1** and upper housing portion **350**C-**2** over PCBA **110**. Although the snap-coupling arrangement described above is typically sufficient to prevent separation of housing portions **350**C-**1** and **350**C-**2** under normal operating conditions, the two housing portions may be separated, in the absence of adhesive, by sufficiently strong opposing (shear) forces applied in the plane of the upper and lower cover plates, which can act to deform the respective peripheral walls and disengaging the tab/slot connections. To prevent such disassembly, adhesive layers **380** and **385** serve to secure housing portions **350**C-**1** and **350**C-**2** together by way of PCBA **110**. As mentioned above, PCBA **110** is formed using conventional PCB assembly procedures, and as such IC **135** is rigidly secured to PCB **111**. When secured to lower housing portion **350**C-**1** by way of adhesive layer **380** and upper housing portion **350**C-**2** by way of adhesive layer **385**, PCBA **110** helps resist separation of the housing portions in response to an applied shearing force by resisting relative movement of the housing portions.

In accordance with an embodiment of the present invention, adhesive layers **380** and **385** are pressure or heat activated, and mounted onto the inner surfaces of housing portions **350**C-**1** and **350**C-**2** before the assembly process is performed. In this manner, the snap-coupling procedure may be completed and reversed, if necessary, before permanent connection of housing portions **350**C-**1** and **350**C-**2** to PCBA **110** (e.g., in response to an applied pressure or heat). Alternatively, a standard adhesive may be used, but this may result in inadvertently gluing the housing portions together in a non-optimal position. In yet another embodiment, a liquid adhesive may be injected into the housing after the snap-coupling process to secure the PCBA to the cover plates.

FIG. **18** is a flow diagram depicting a method for manufacturing USB devices according to another embodiment of the present invention. The method begins by forming (e.g.,

by plastic injection molding) a first housing portion (block **410**), a second housing portion (block **420**), and a PCBA (block **430**). First housing portion (e.g., lower housing portion **350C-1**) and second housing portion (e.g., upper housing portion **350C-2**) may be formed, for example, using known plastic injection molding techniques, to include corresponding tabs and slots in the respective peripheral walls in order to facilitate the snap-coupling process described herein. Note that PCBA may be formed at a significantly different time frame from the housing portions, thereby facilitating the sale of the housing portions in an assembly kit. Next, the housing portions are mounted over the PCBA and snap-coupled together such that the contact pads **120** formed on PCB plug section **114** are exposed through window **359C** formed in upper housing portion **350C-2** (block **440**). Finally, when a press- or heat-activated adhesive is used, or when adhesive is injected into the housing, this adhesive is activated/injected into the housing to permanently secure the housing portions together (block **450**). Note that the injecting/activating process may be omitted when an adhesive that does not require activation is provided on one of the PCBA or the housing portions prior to the assembly process.

FIGS. **19**(A) to **19**(C) are cross-sectional end views depicting the snap coupling process associated with the assembly methods of FIG. **18**. Referring to FIG. **19**(A), PCBA **110** is positioned over lower housing portion **350C-1** with IC **135** facing downward. Note that adhesive layer **380** is already mounted on the inside (upper) surface of lower cover plate **352C**. FIG. **19**(B) depicts a sub-assembly formed by PCBA **110** and lower housing portion **350C-1**, and also depicts upper housing portion **350C-2** positioned over the sub-assembly prior to snap coupling. IC **135** is secured to lower cover plate **352C** by way of adhesive layer **380**, and adhesive layer **385** is already mounted on the inside (lower) surface of top plate **358C**. Side walls **351C-21** and **351C-22** of upper housing portion **350C-2** are positioned over side walls **351C-11** and **351C-12** of lower housing portion **350C-1**, and then moved downward until tabs **356C** engage slots **359C**. FIG. **19**(C) shows completed USB device **300C**, with upper housing portion **350C-2** mounted onto lower housing portion **350C-1** such that tabs **356C** are snap coupled into slots **359C**, and top plate **358C** is secured to PCB **111** by way of adhesive layer **385**.

FIG. **20** is an exploded perspective view showing an USB device **500** according to yet another specific embodiment of the present invention. USB device **500** includes a lower (first) housing portion **550-1**, and upper (second) housing portion **550-2**, and PCBA **110**. Lower housing portion **550-1** includes a planar lower cover plate **552** having a relatively wide handle cover section **552-1** and a relatively narrow plug cover section **552-2**, and several support ribs **557** extending upward from plug cover section **552-2**. Upper housing portion **550-2** generally includes a peripheral wall **551** including a handle wall section **551-1** and a plug wall section **551-2** that define a peripheral shelf **555** (shown in FIG. **21**), and a thin plastic top plate **558** that is integrally formed on upper edges of handle wall section **551-1**. Note that plug wall section **551-2** defines an opening **554**.

In accordance with an aspect of the present embodiment invention, as indicated in FIG. **21**, a peripheral shelf **555** is formed in peripheral wall sections **551-1** and **551-2**, and several welding structures **559** are formed on peripheral shelf **555**. When upper housing portion **550-2** is mounted over PCBA **110** and onto lower housing portion **550-1**, the peripheral edge of lower cover plate **552** become engaged in peripheral shelf **555**. Subsequently, ultrasonic energy is applied through the peripheral edge of lower cover plate **552** (as indicated by arrows in FIG. **22**), thereby melting the welding structures, thus welding upper housing **550-2** to lower housing **550-1** and completing the fabrication of USB device **500**.

The various low-profile USB device structures described herein may be beneficially utilized for various portable applications and modified for various purposes due to their substantially flat design. For example, as indicated in FIG. **23**, a key chain-type USB device **600** may include a housing **650** having a peripheral wall **651** defining one or more holes **653** for receiving a key chain, thus providing a dual-use structure that can be easily carried in a user's pocket. In addition, the various low-profile USB device structures may be modified to serve as convenient external storage for, for example, MP3 players (i.e., media storage for music), digital cameras, and mobile phones.

Another embodiment utilizes the disclosed USB device structures to facilitate wireless communications. In this case, a USB device (e.g., Bluetooth USB adapter **700** shown in FIG. **24**) may be plugged into the USB port of a host device, and may include a wireless communication device **735** that generates wireless signals emitted from transceiver antenna **775**, which may be provided on a back side of housing **750** to maximize the effect of signal transmission. Wireless communication device **735** communicates with a host (e.g., a computer) via USB control IC **730**, and includes a Bluetooth controller, a radio frequency (RF) transceiver, a baseband controller, memory (e.g., EEPROM), a voltage regulator, a crystal, and a control circuit for controlling LED **770**. These circuits may be combined together, along with passive circuits (e.g., resistors, capacitors and inductors) in a single chip, as depicted, or formed on one or more separate chips that are mounted on PCB **710** and enclosed by housing **750**. Such an arrangement would facilitate communication between the host and a wireless communication device, such as a BlueTooth-enabled device. Bluetooth is a wireless technology that enables any electrical device to wirelessly communicate in the 2.4 GHz frequency band. It allows devices such as mobile phones, headsets, PDA's and computers to communicate and send data to each other without the need for wires or cables to link to devices together. It has been specifically designed as a low cost, low power, radio technology, which is particularly suited to the short range Personal Area Network (PAN) application. By plugging Bluetooth USB adapter **700** into the USB port, the Bluetooth USB adapter enables a non-Bluetooth electrical device (i.e., the host) to communicate with Bluetooth enabled devices. One specific wireless application may be a BlueTooth mouse device, which are used today for cursor pointing. Another application example is allowing computer user doing two-way communication to Bluetooth-wireless equipped mobile phones, PDA, keyboard, printer, digital camera, and MP3 player. Other applications may include wireless headsets. Yet another application may include enabling BlueTooth wireless connections inside an automobile to facilitate "hands free" operation of a mobile phone. Of course, other wireless communication protocols, such as IrDA infrared transmitting devices, may also be utilized in conjunction with USB devices of the present invention.

Although the present invention has been described with respect to certain specific embodiments, it will be clear to those skilled in the art that the inventive features of the present invention are applicable to other embodiments as well, all of which are intended to fall within the scope of the present invention.

The invention claimed is:

1. A low-profile Universal-Serial-Bus (USB) device comprising:

a printed circuit board assembly (PCBA) including:

a printed circuit board (PCB) including a relatively wide PCB handle section and a relatively narrow PCB plug section, the PCB having opposing first and second surfaces,

a plurality of metal contacts disposed on the first surface of the PCB plug section,

at least one integrated circuit (IC) mounted on the second surface of the PCB, the IC including means for processing USB signals, and

a plurality of conductive traces mounted on the PCB, each conductive trace extending between an associated metal contact and the IC; and

a housing attached to the PCBA and including a cover plate extending over both the PCB handle section and the PCB plug section,

wherein the cover plate includes a planar surface that is parallel to the PCB,

wherein a first thickness measured between the first surface of the PCB and the planar surface adjacent to the metal contacts is substantially equal to a second thickness between the first surface of the PCB and the planar surface adjacent to the IC, and

wherein substantially all of the housing is located between the first surface and the cover plate.

2. The low-profile USB device of claim 1, wherein the PCBA comprises a lead-free structure.

3. The low-profile USB device of claim 1, wherein the housing is arranged such that the entire first surface of the PCB handle section is exposed and forms at least part of an upper surface of the USB device.

4. The low-profile USB device of claim 1, wherein the housing further comprises a peripheral wall extending around a peripheral edge of the PCB such that an upper edge of the peripheral wall covers the peripheral edge of the PCB, and an upper edge of the peripheral wall is substantially coplanar with the first surface of the PCB.

5. The low-profile USB device of claim 4, wherein the housing comprises a molded material formed on the ICs and the second surface of the PCB.

6. The low-profile USB device of claim 4, wherein the cover plate of the housing is secured to said at least one IC by an adhesive layer.

7. The low-profile USB device of claim 4, further comprising a light-producing device mounted on the second surface of the PCB, wherein a peripheral wall of the housing defines an opening aligned such that the light-producing device is visible through the opening.

8. The low-profile USB device of claim 4, wherein the peripheral wall includes end rail sections extending above the first surface of the PCB.

9. The low-profile USB device of claim 1, wherein the PCB further comprises metal dividers formed on the first surface of the PCB, each of the metal dividers being located between an adjacent pair of the metal contacts.

10. The low-profile USB device of claim 1, wherein the cover plate defines one or more locking depressions.

11. The low-profile USB device of claim 1, wherein outer surfaces of the peripheral wall of the housing is aligned with a peripheral edge of the PCB.

12. The low-profile USB device of claim 1, wherein the housing further comprises:

a thin plastic plate mounted on the first surface of the PCB handle section.

13. The low-profile USB device of claim 12, wherein the housing further comprises:

a peripheral wall extending around a peripheral edge of the PCB, the peripheral wall having a lower edge integrally molded to a peripheral edge of the cover plate; and

a thin plastic plate integrally molded to an upper edge of the peripheral wall, the thin plastic plate extending over the first surface of the PCB handle section.

14. The low-profile USB device of claim 13, wherein the housing comprises a molded material formed on the ICs and the second surface of the PCB.

15. The low-profile USB device of claim 13, wherein the peripheral wall includes a peripheral shelf, and wherein the PCBA is mounted on housing such that a peripheral edge of the PCB is supported by the peripheral shelf.

16. The low-profile USB device of claim 1, wherein the housing comprises:

a first housing portion including the cover plate and a first peripheral wall extending perpendicular to the cover plate;

a plurality of tabs formed on an outside surface of the first peripheral wall;

a second housing portion including a top plate and a second peripheral wall extending perpendicular to the top plate, wherein an inside surface of the second peripheral wall defines a plurality of slots arranged such that, when the second housing portion is mounted over the first housing portion, each of the tabs formed on the first peripheral wall engage a corresponding slot.

17. The low-profile USB device of claim 16, further comprising a first adhesive layer disposed between the PCBA and the cover plate, and a second adhesive layer disposed between the first surface of the PCB and the top plate.

18. The low-profile USB device of claim 1, wherein the housing comprises:

a first housing portion including the cover plate;

a second housing portion including a peripheral wall having a handle wall section and a plug wall section, the second housing portion also including a top plate mounted on the handle wall section, wherein a window is defined by the plug wall section,

wherein the second housing portion is mounted onto the first housing portion such that a peripheral edge of the cover plate is ultrasonically welded onto the peripheral wall, such that the PCB handle portion is positioned between a first portion of the cover plate, and such that the metal contacts are exposed through the window.

19. The low-profile USB device of claim 1, wherein the housing defines at least one hole for receiving a key chain therein.

20. The low-profile USB device of claim 1, wherein the ICs include a wireless communication transmission device.

21. A method for manufacturing (Universal Serial Bus) devices comprising:

forming a first housing portion including a first cover plate and a peripheral wall extending from the first cover plate and defining a plurality of peripheral slots, a second housing portion including a second peripheral wall having a plurality of tabs extending from the peripheral wall, and a PCBA; and

snap-coupling the second housing portion to the first housing portion such that each of the tabs is received inside a corresponding slot of the plurality of peripheral slots, and such that the PCBA is sandwiched between first and second housing portions with a first adhesive layer between a first surface of the PCBA and the first cover plate and a second adhesive layer between a second surface of the PCBA and the second cover plate.

* * * * *