US007094086B2

(12) **United States Patent**
Teicher

(10) **Patent No.: US 7,094,086 B2**
(45) **Date of Patent: Aug. 22, 2006**

(54) **REVERSIBLE UNIVERSAL SERIAL BUS (USB) DEVICE AND CONNECTOR**

(75) Inventor: **Mordechai Teicher**, Hod Hahsaron (IL)

(73) Assignee: **Msystems Ltd.**, Kfar Saba (IL)

(*) Notice: Subject to any disclaimer, the term of this patent is extended or adjusted under 35 U.S.C. 154(b) by 0 days.

(21) Appl. No.: **11/185,771**

(22) Filed: **Jul. 21, 2005**

(65) **Prior Publication Data**

US 2006/0024997 A1 Feb. 2, 2006

Related U.S. Application Data

(60) Provisional application No. 60/592,517, filed on Aug. 2, 2004.

(51) **Int. Cl.**
H01R 29/00 (2006.01)

(52) **U.S. Cl.** **439/173**; 439/218; 439/53; 439/954

(58) **Field of Classification Search** 439/217–218, 439/53, 173, 954
See application file for complete search history.

(56) **References Cited**

U.S. PATENT DOCUMENTS

5,442,243 A 8/1995 Bailey
6,257,930 B1 * 7/2001 Yu 439/607
6,394,813 B1 5/2002 Stout et al.
6,733,329 B1 5/2004 Yang
6,948,983 B1 * 9/2005 Peng 439/660
6,981,887 B1 1/2006 Mese
2003/0171035 A1 9/2003 Yoo
2005/0042930 A1 2/2005 Harkabi et al.

FOREIGN PATENT DOCUMENTS

WO WO2005/124932 12/2005

* cited by examiner

Primary Examiner—Truc Nguyen
(74) *Attorney, Agent, or Firm*—Mark M. Friedman

(57) **ABSTRACT**

A reversible connector for coupling with a USB A-type standard connector, including a first set of four electrical contact regions and a second set of four electrical contact regions, the contact regions configured such that in a first coupling orientation of the reversible connector with the standard connector, only the first set of electrical contact regions is mechanically connected with the contacts of the standard connector and in a second coupling orientation of the reversible connector with the standard connector, only the second set of electrical contact regions is mechanically connected with the contacts of the standard connector. Also provided are corresponding reversible USB devices and appliances based upon the aforementioned reversible connectors.

22 Claims, 49 Drawing Sheets

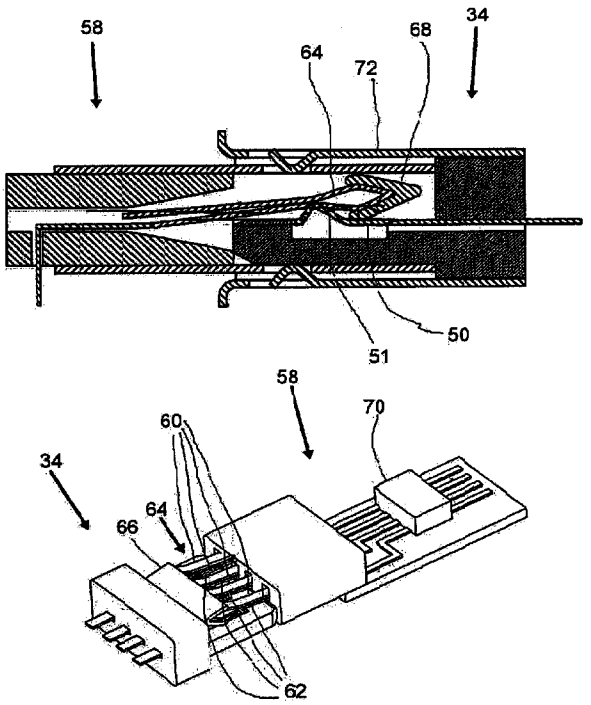

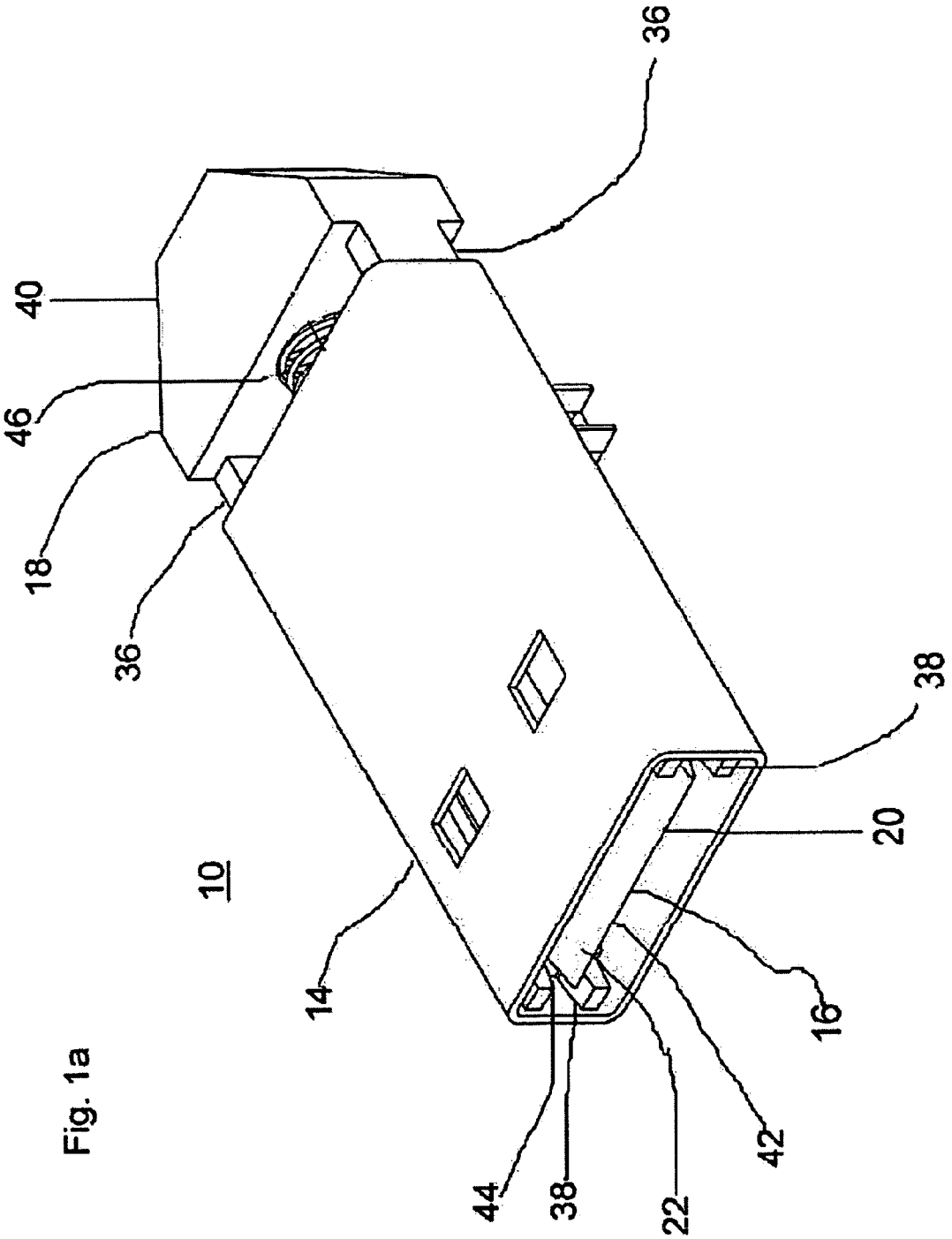

Fig. 1a

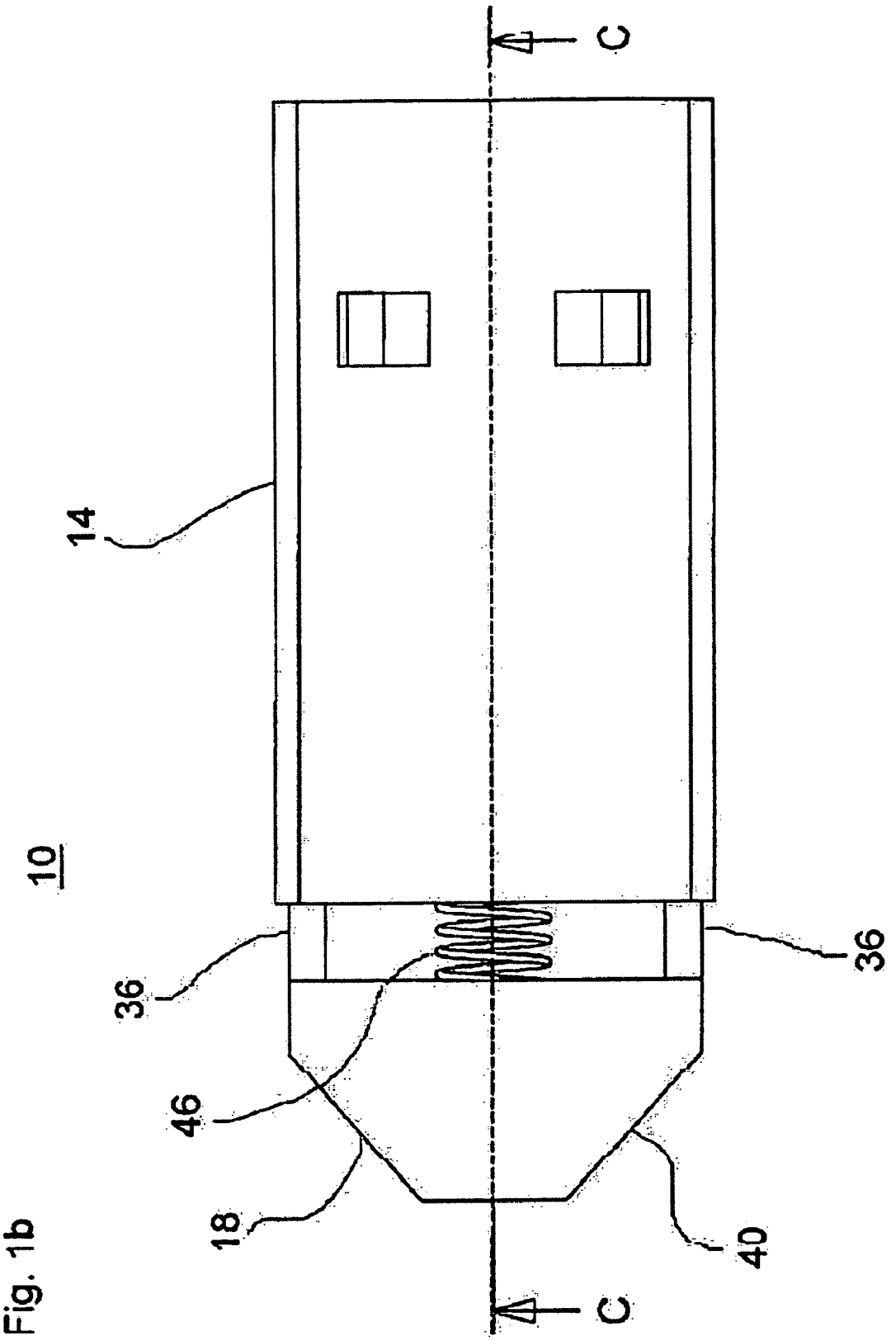

Fig. 1b

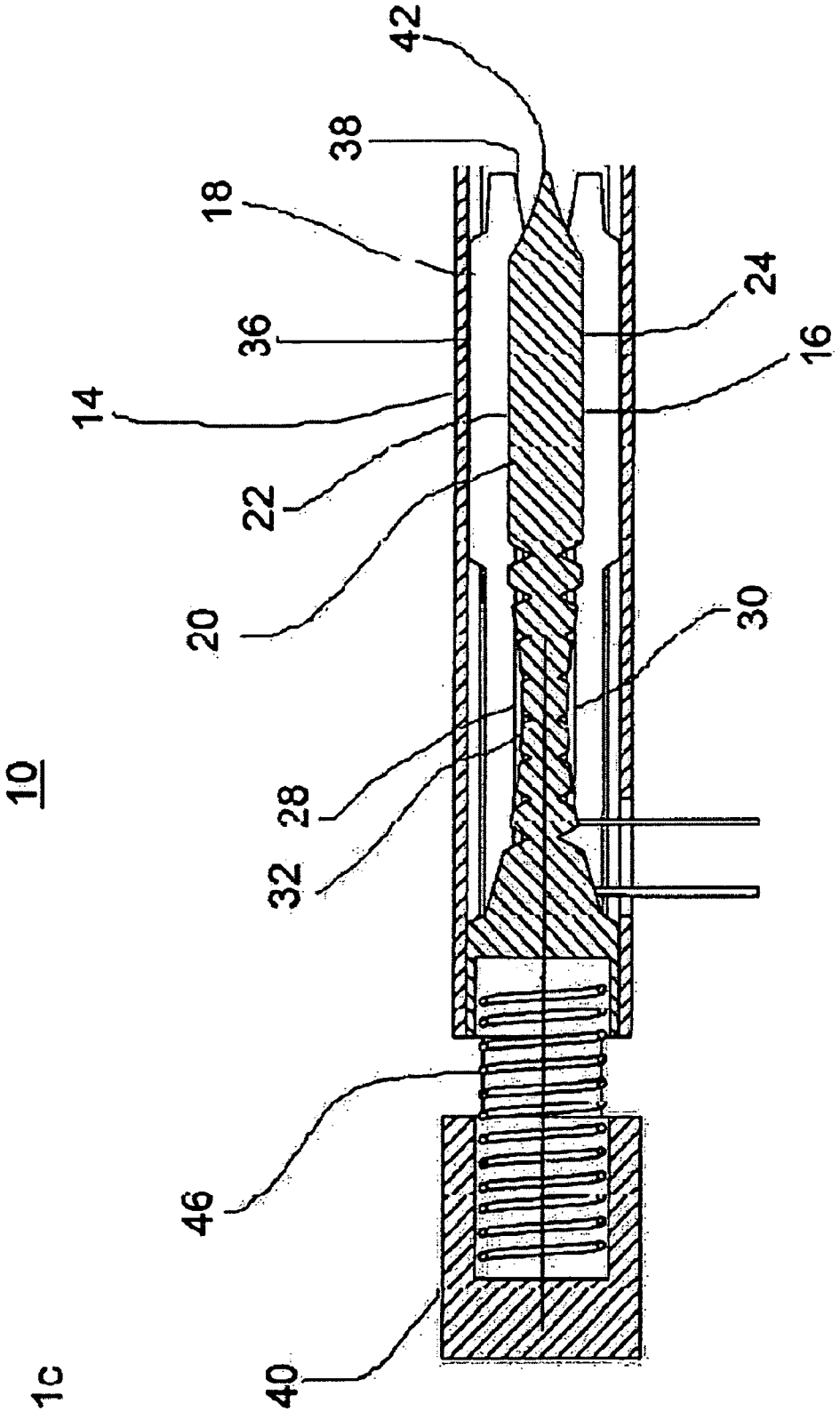

Fig. 1c

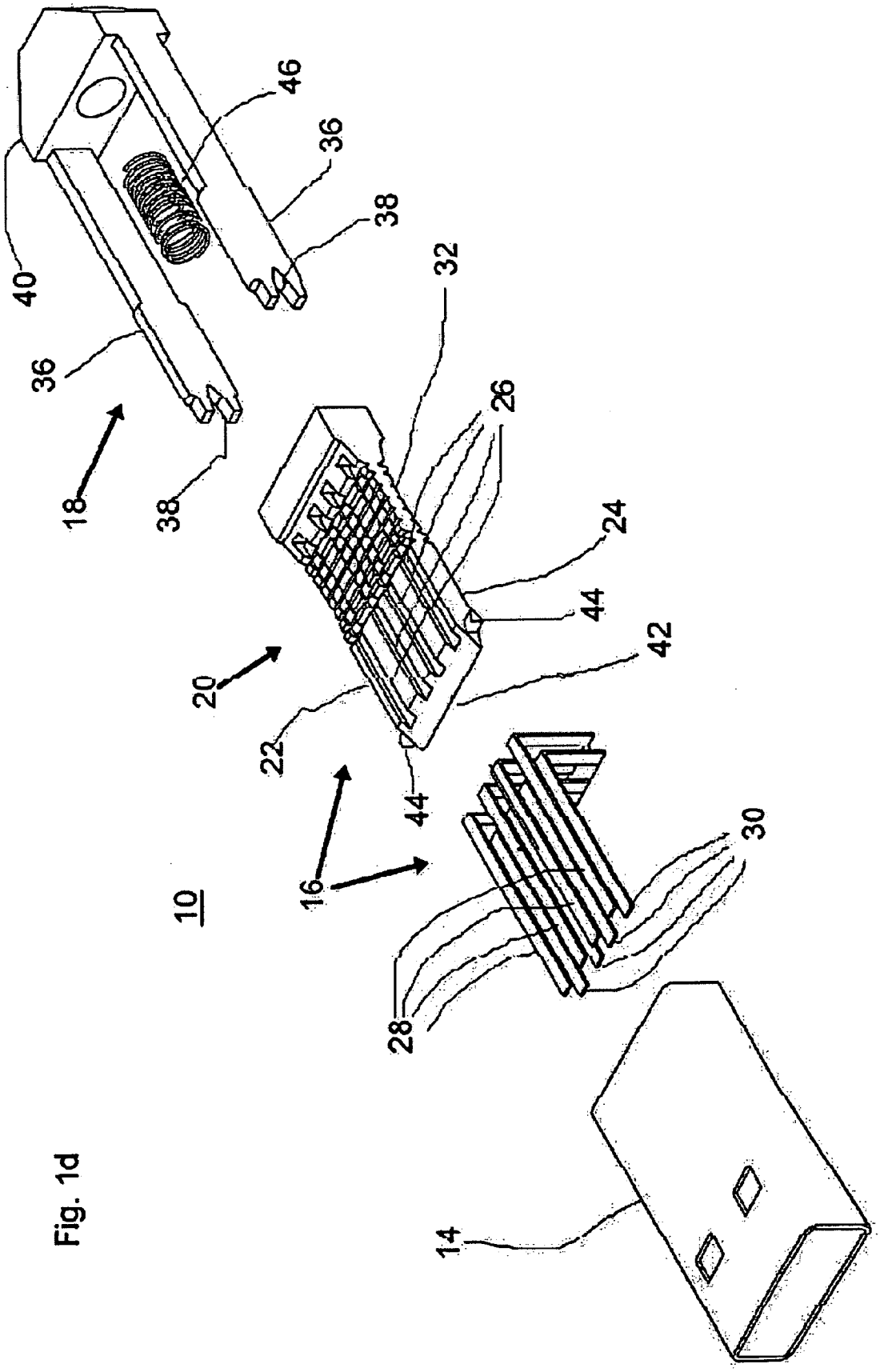

Fig. 1d

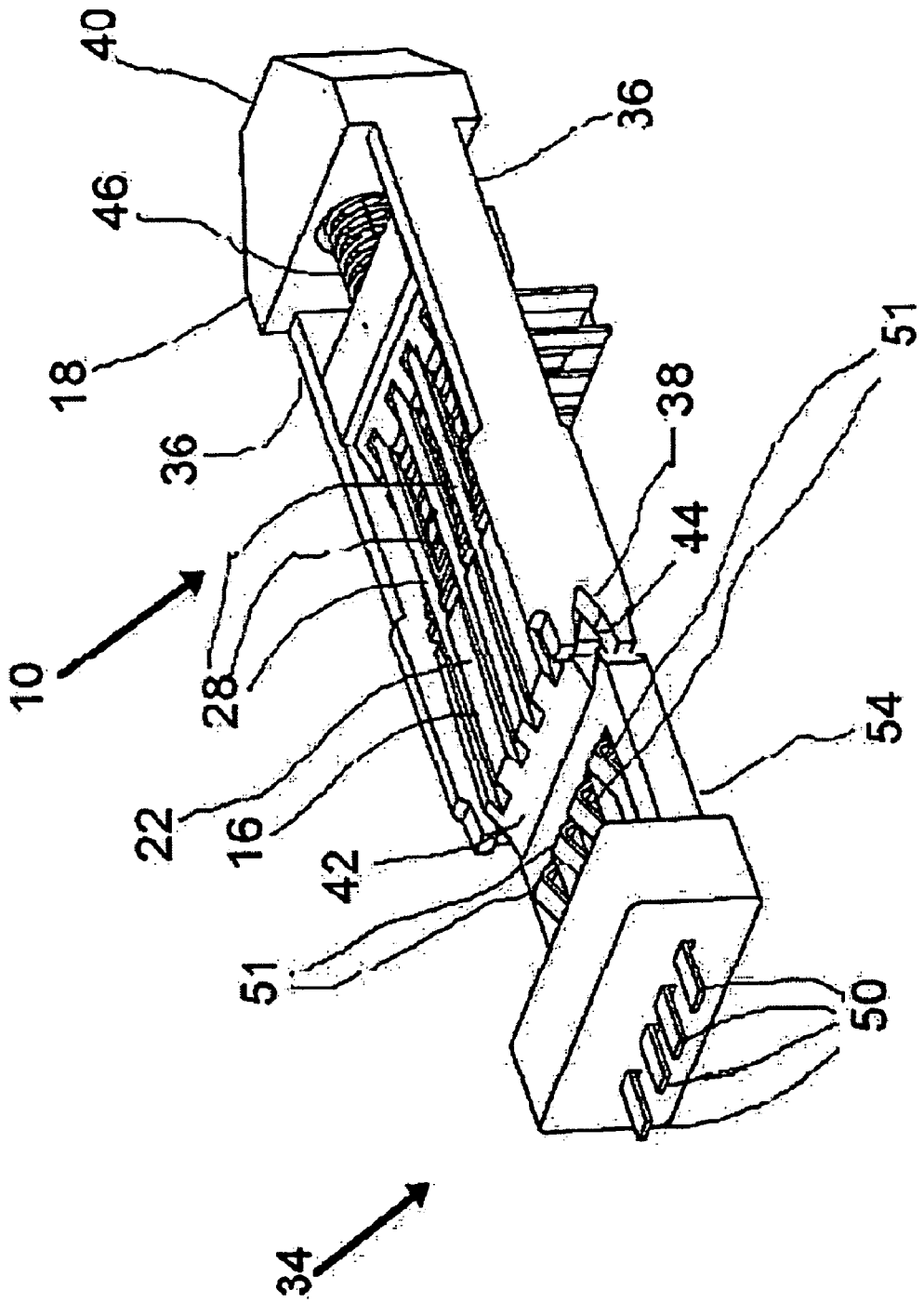

Fig. 1e

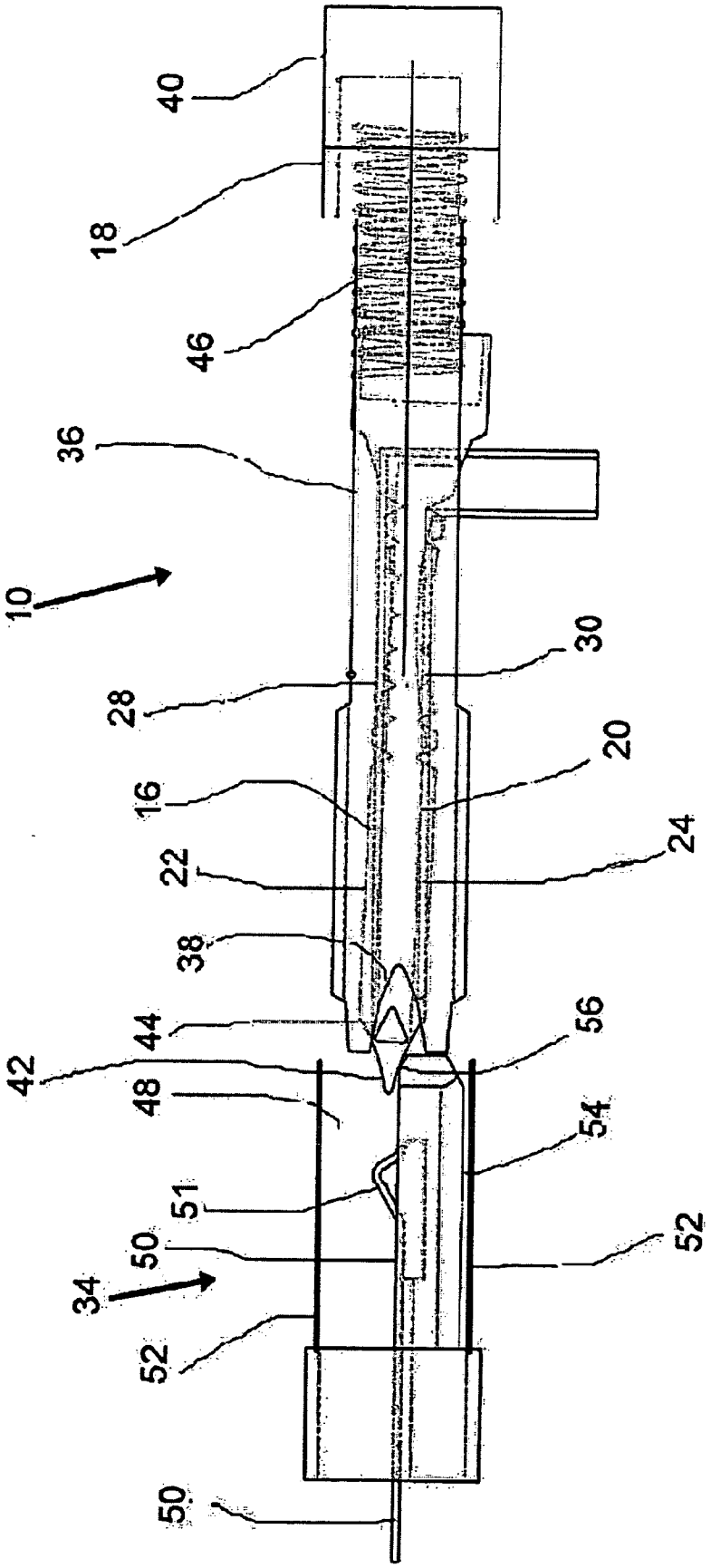

Fig. 1f

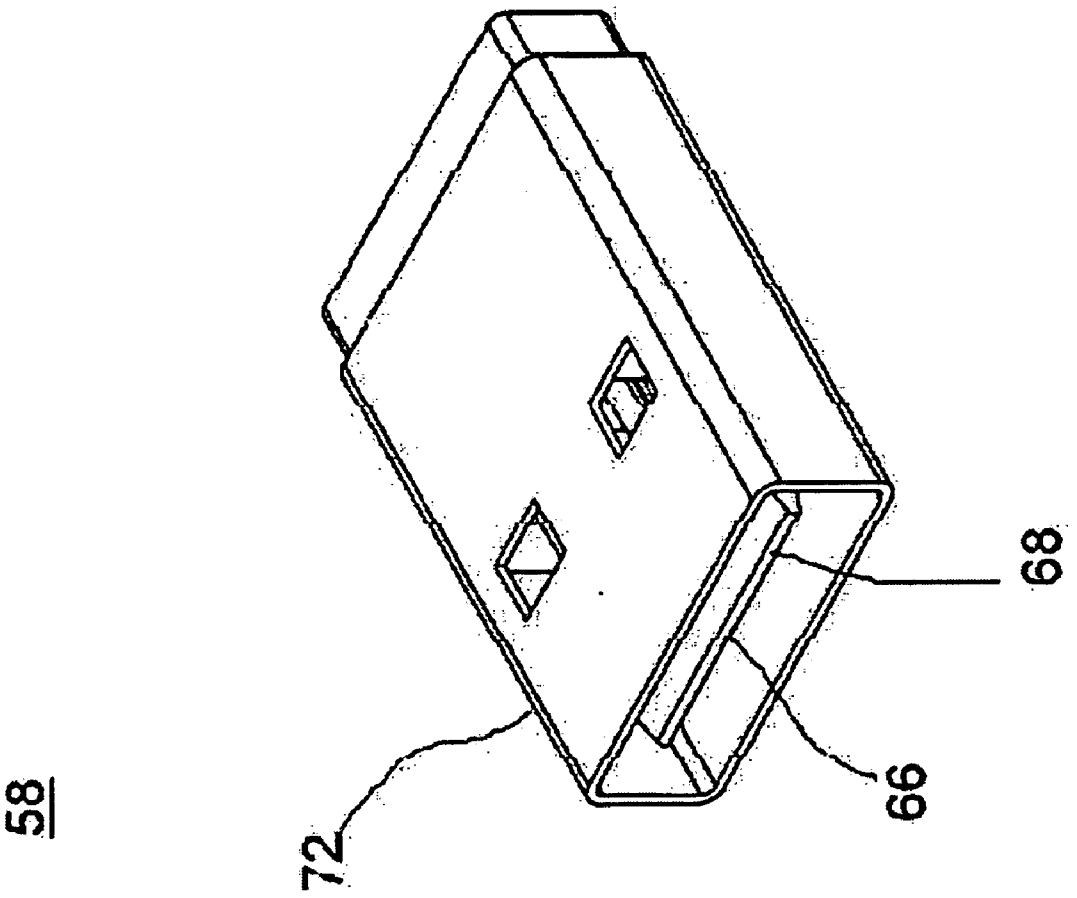

Fig. 2a

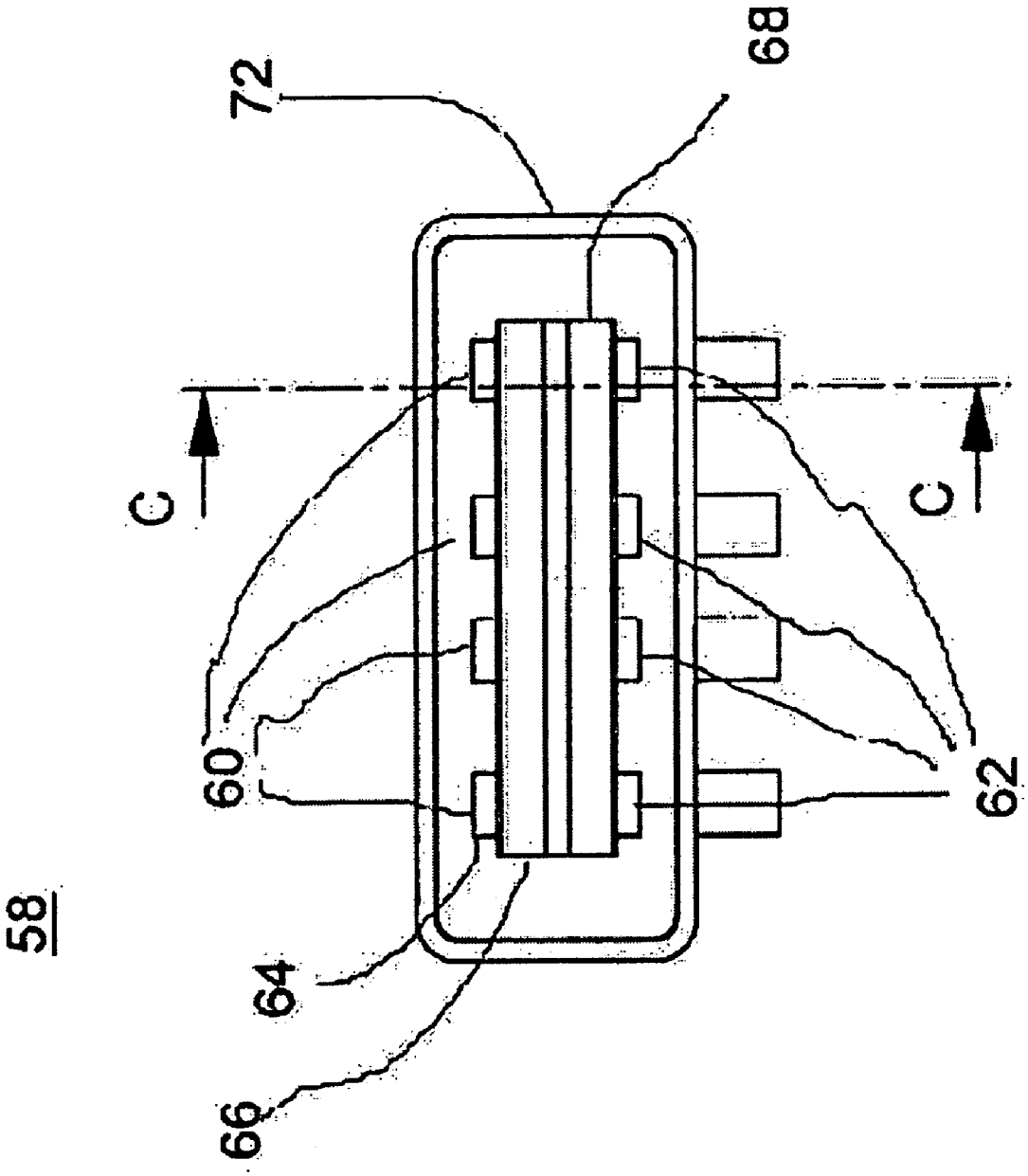

Fig. 2b

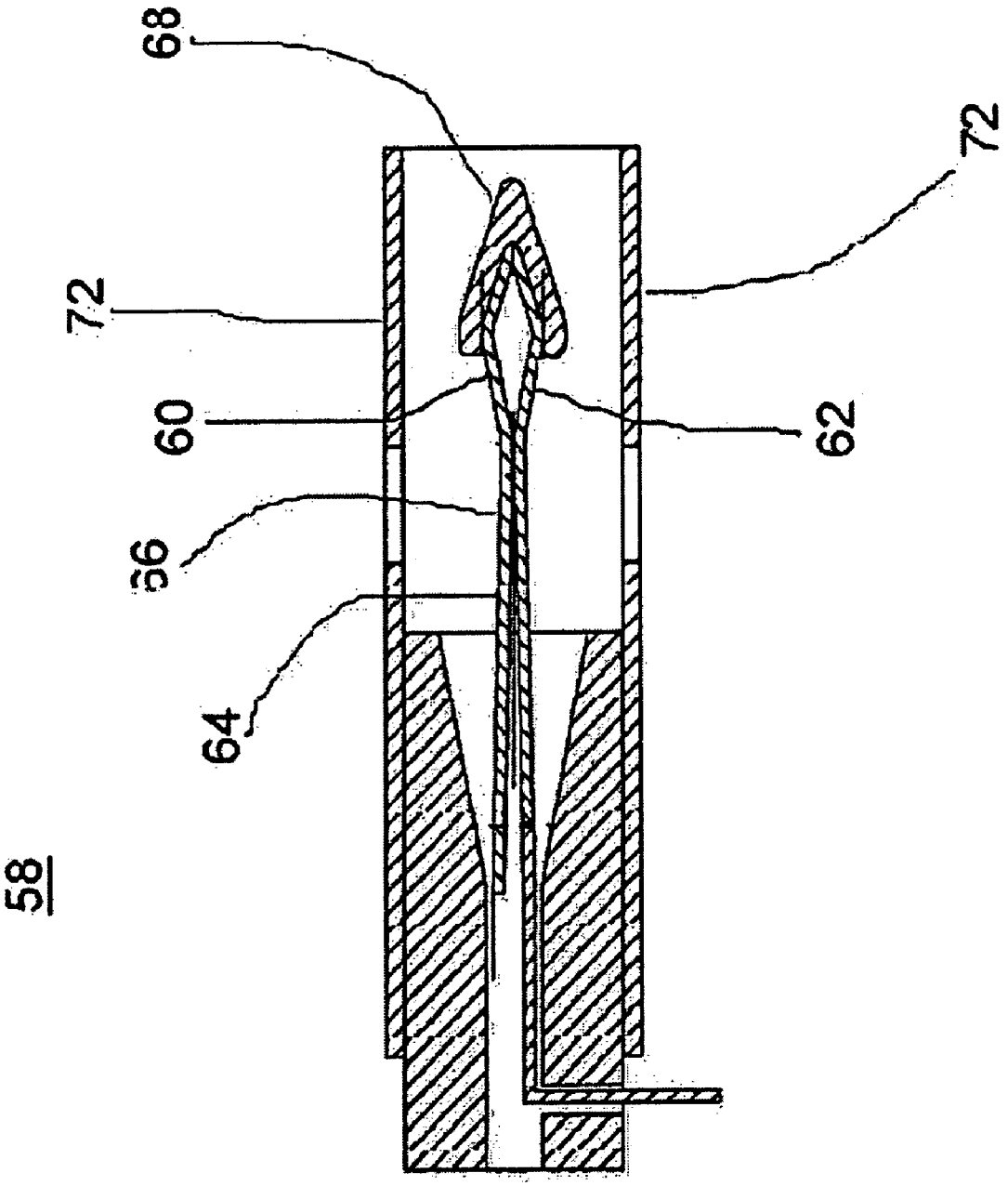

Fig. 2c

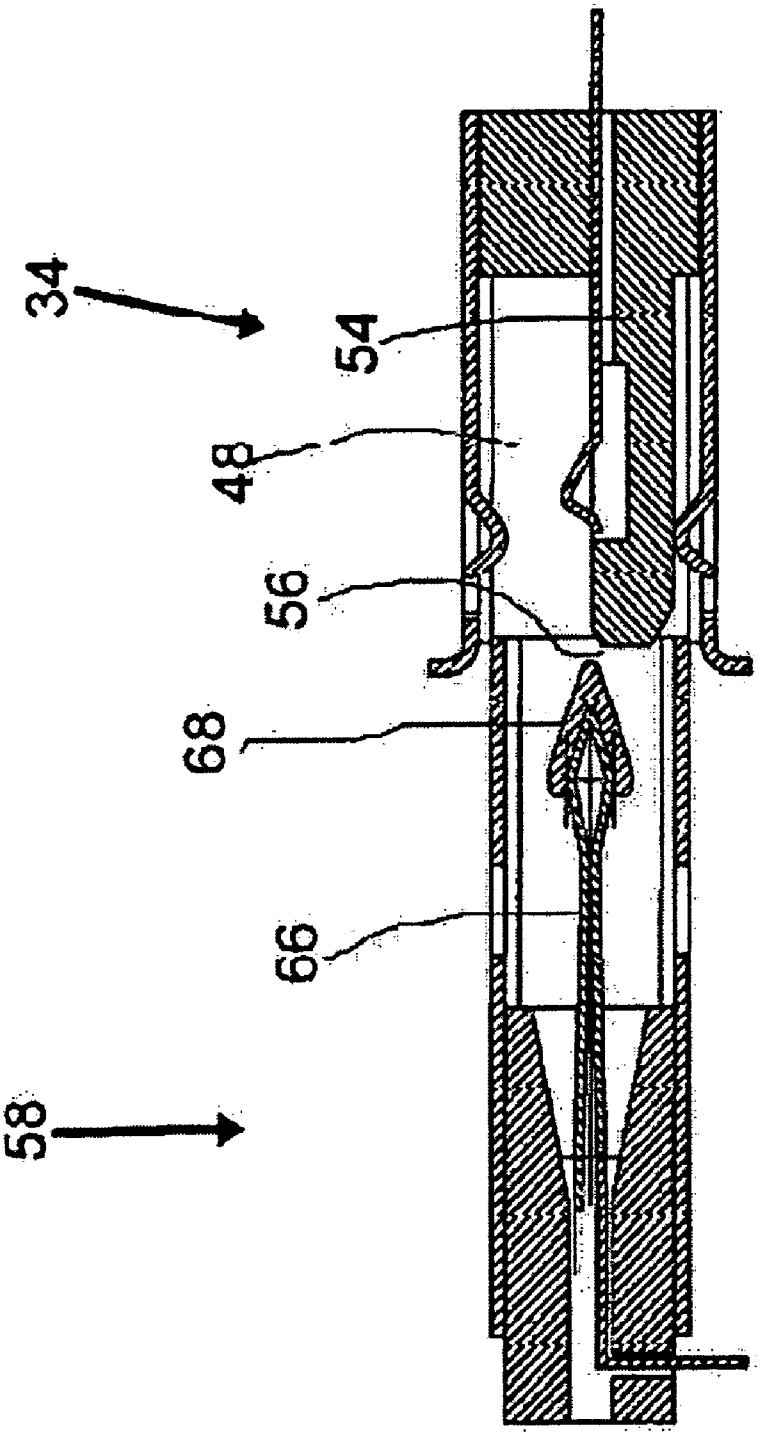

Fig. 2d

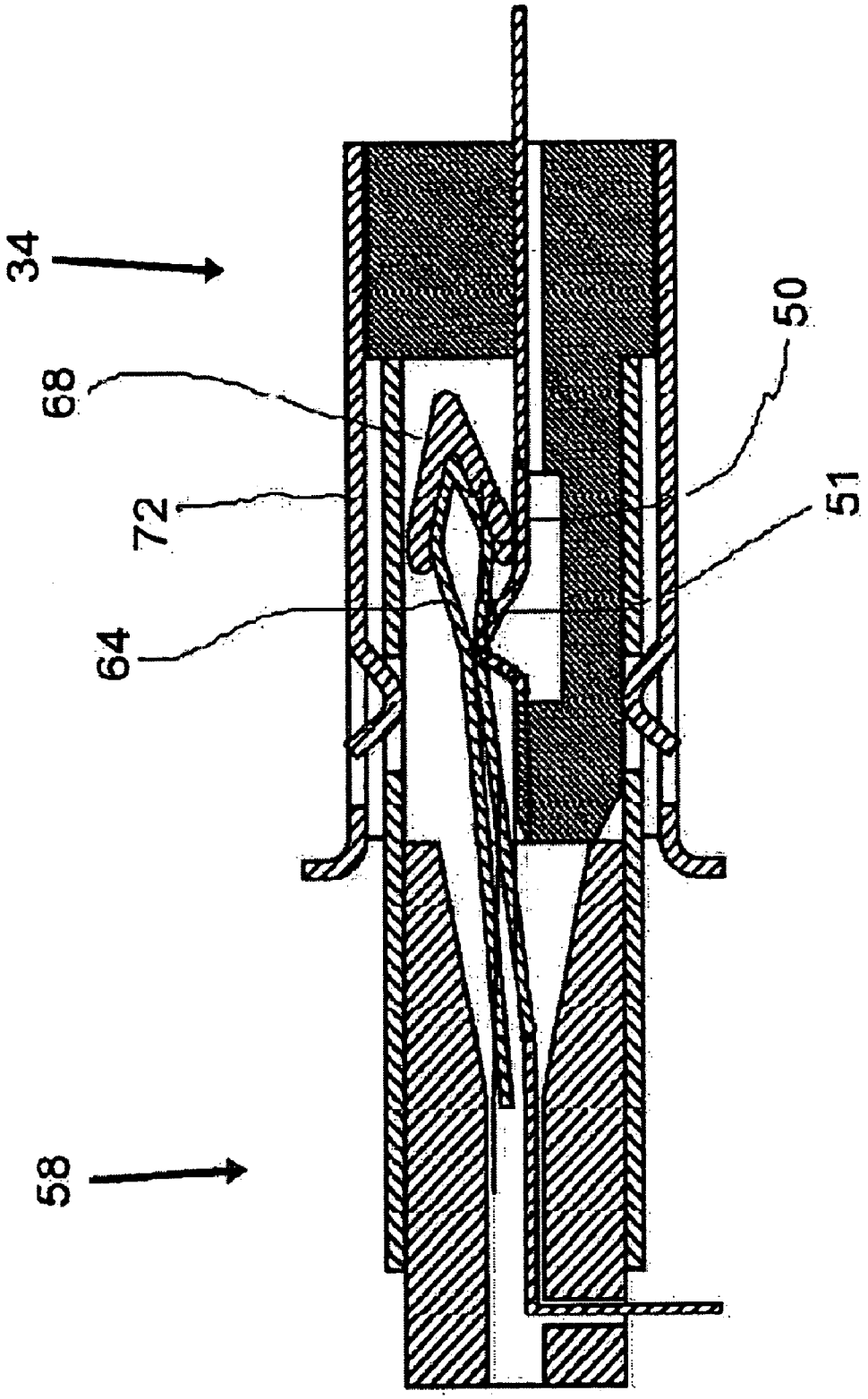

Fig. 2e

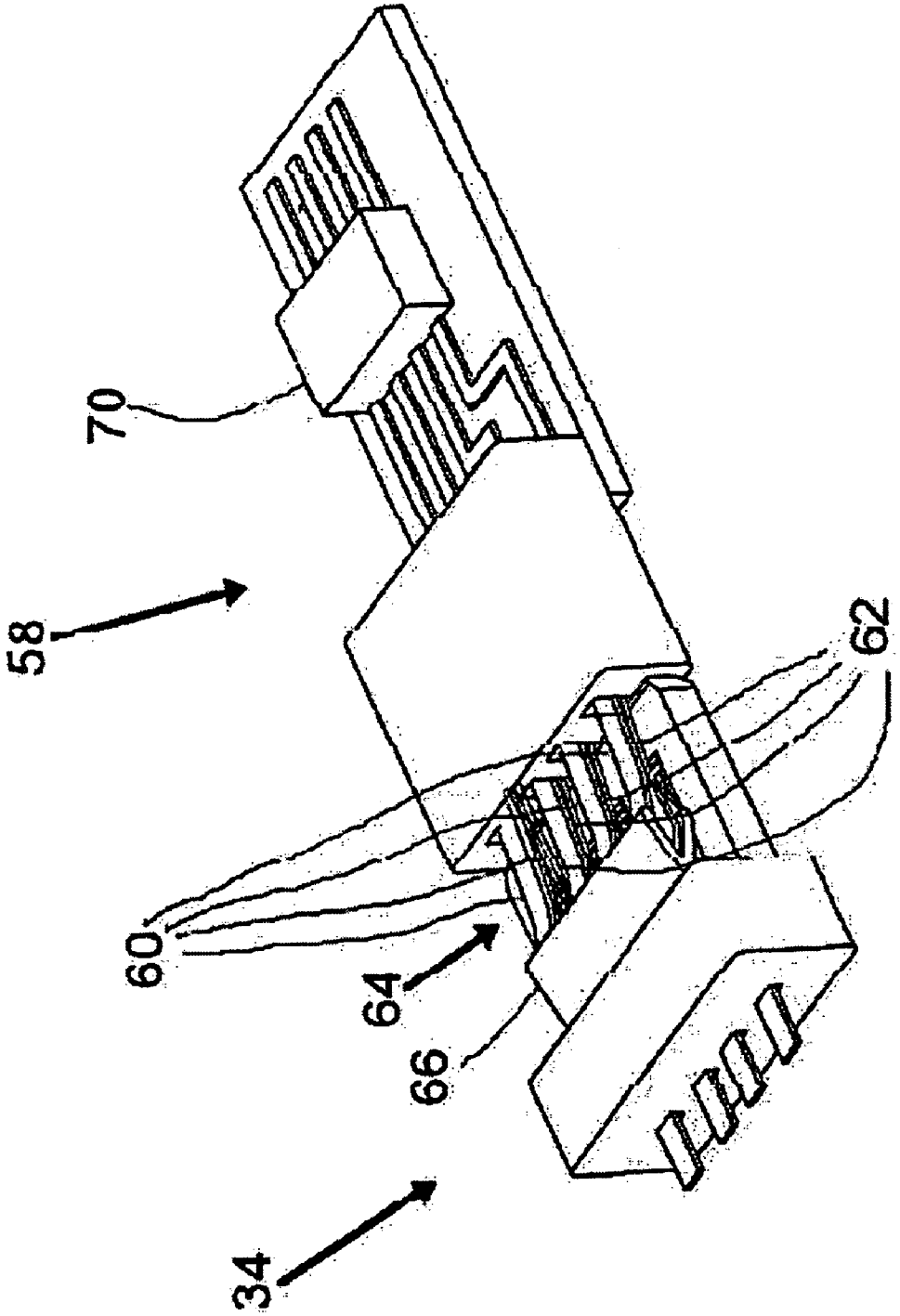

Fig. 2f

Fig. 2g

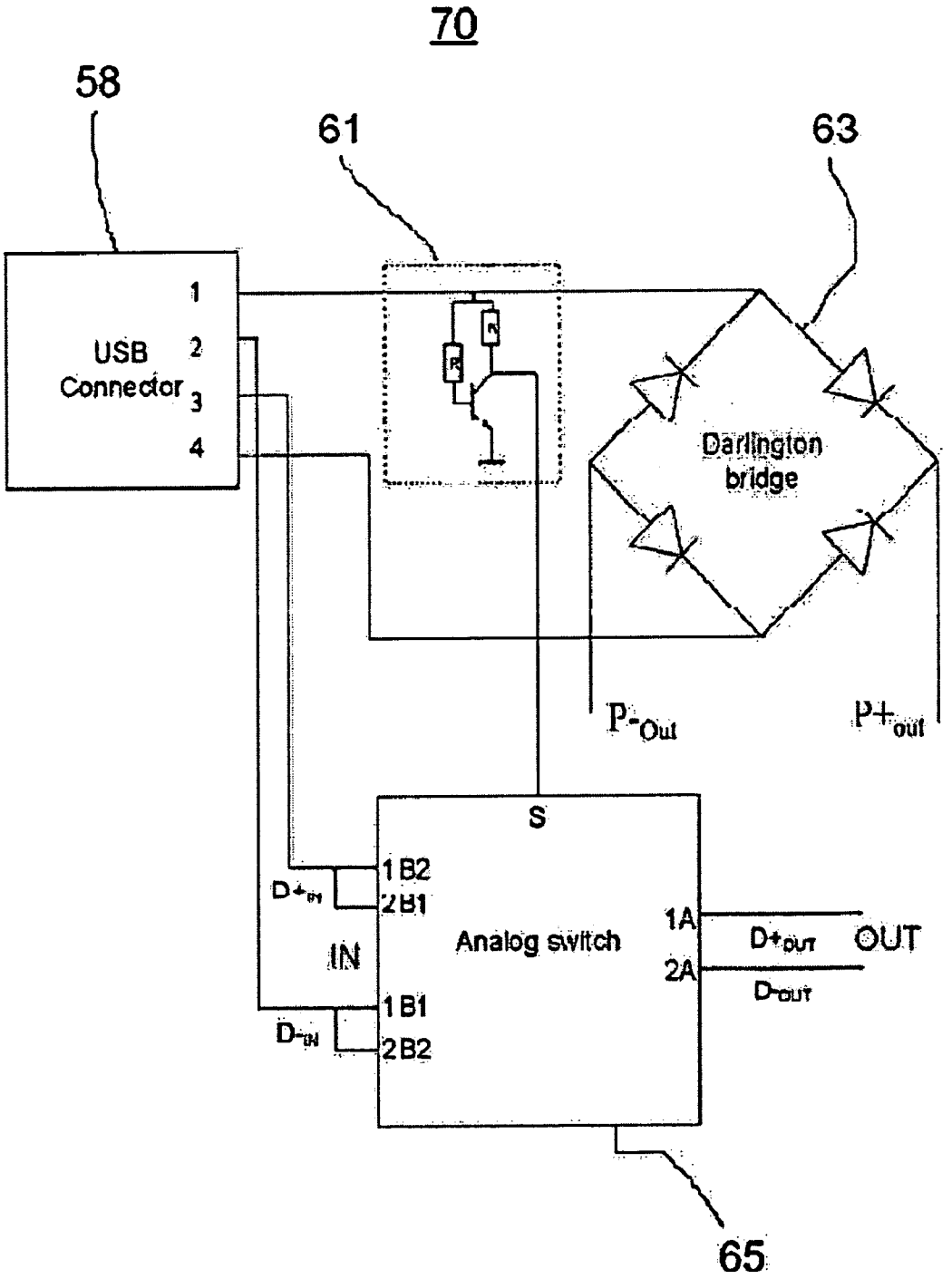
70
58
61
63
USB Connector
1
2
3
4
R
R
Darlington bridge
P-Out
P+out
S
1 B2
2 B1
D+IN
IN
1 B1
2 B2
D-IN
Analog switch
1A
2A
D+OUT
D-OUT
OUT
65

Fig. 2h

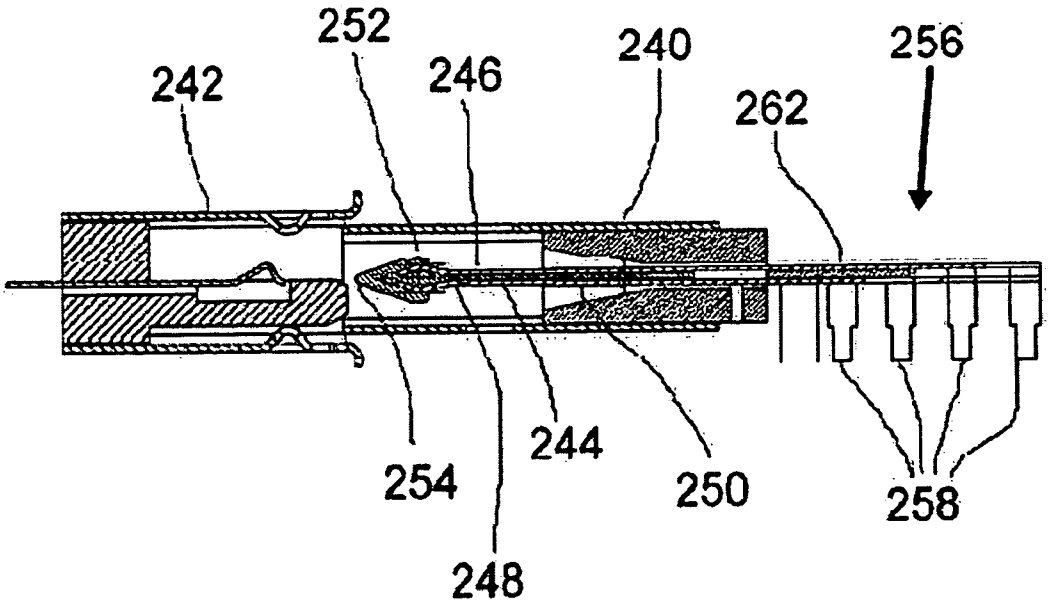
252
246
240
256
242
262
254
244
250
258
248

Fig. 2i

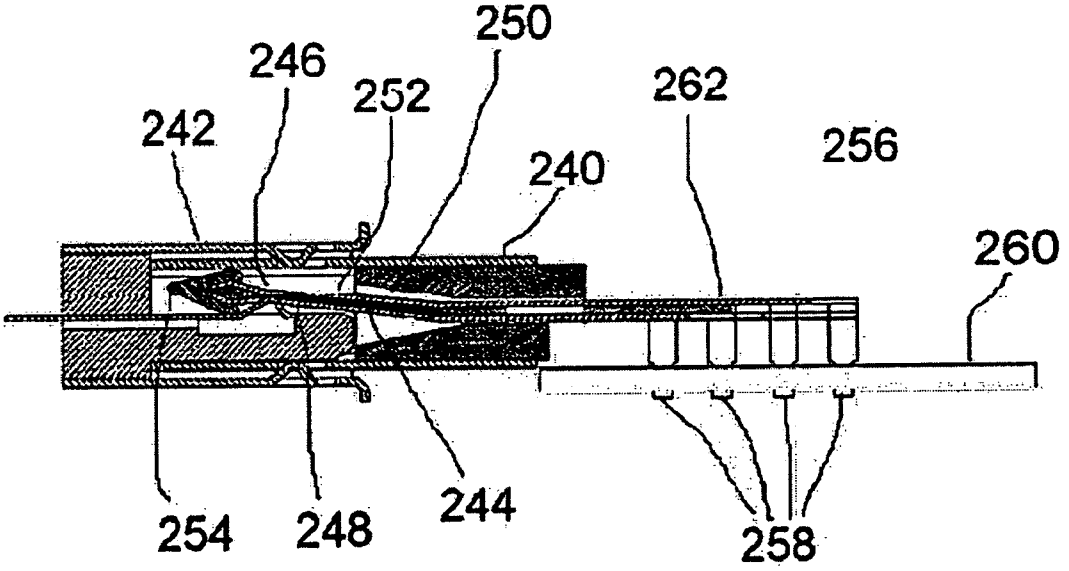
250
246
252
262
242
256
240
260
254
248
244
258

Fig. 2j

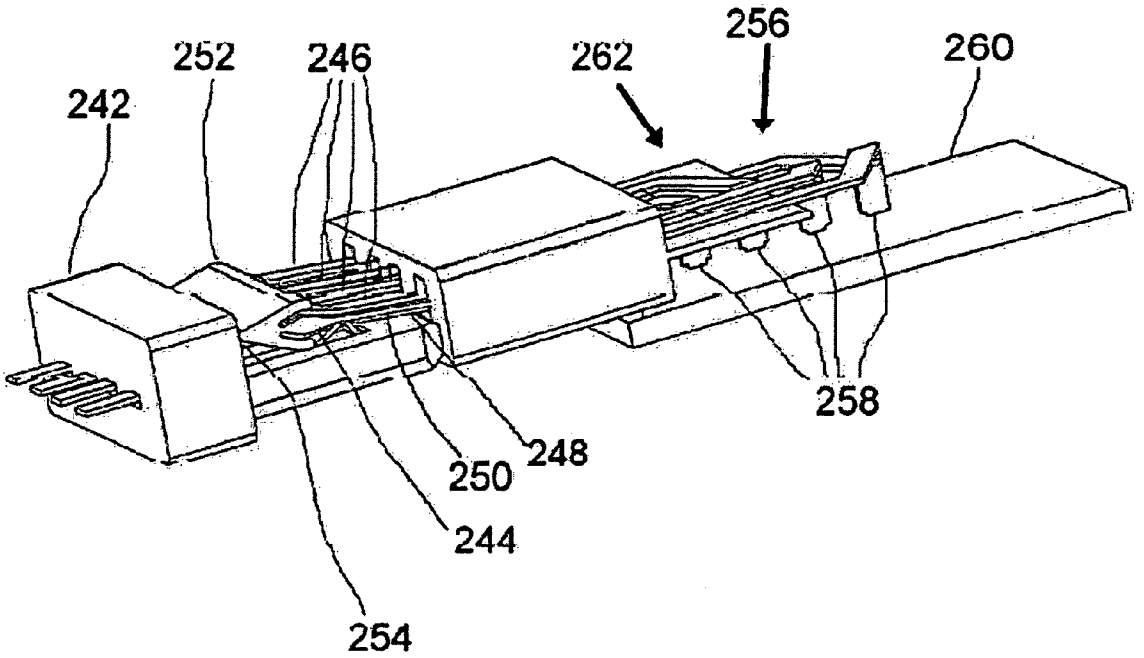

Fig. 2k

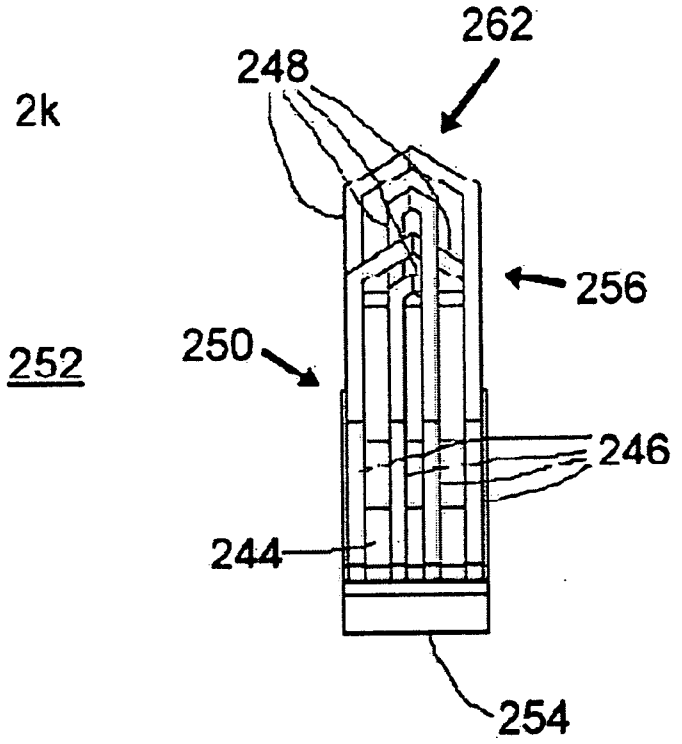
262
248
256
252
250
246
244
254

Fig. 2m

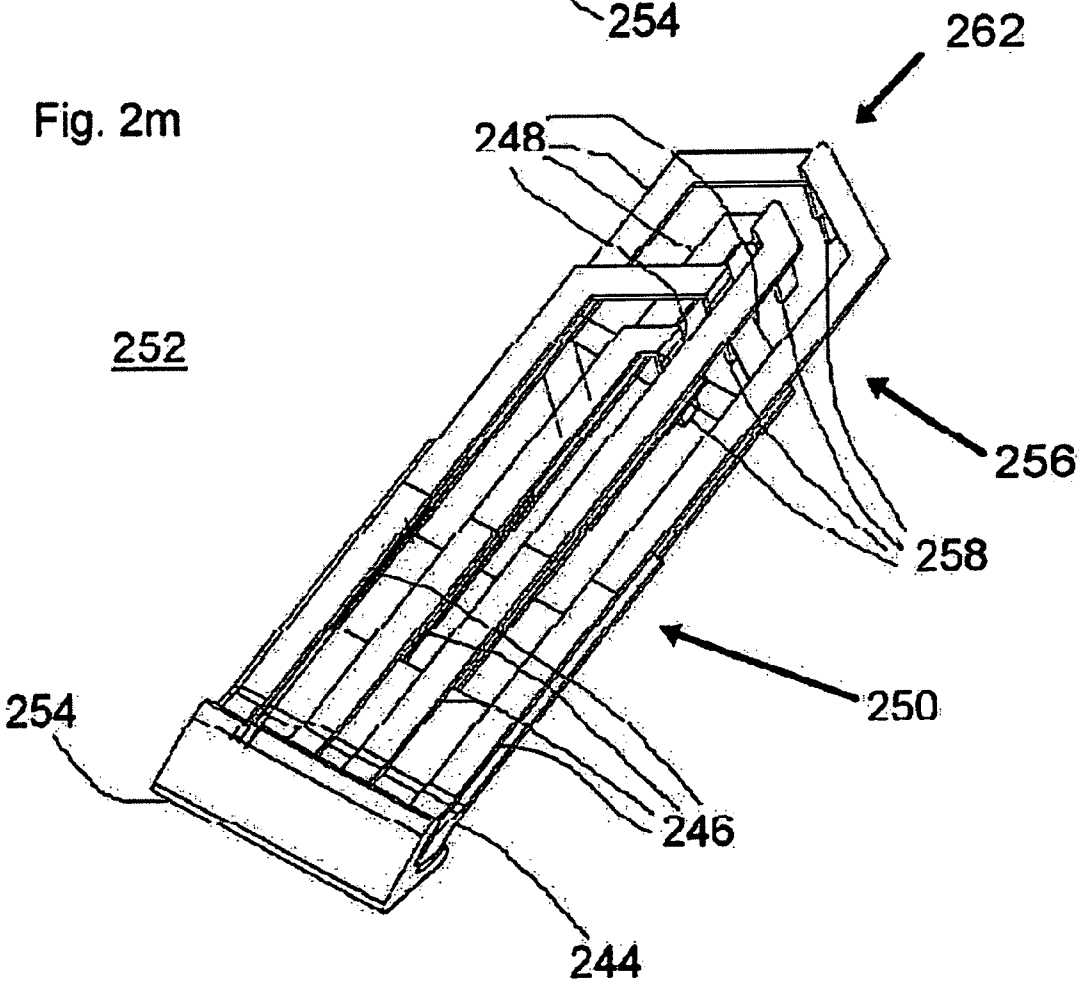
262
248
252
256
258
250
254
246
244

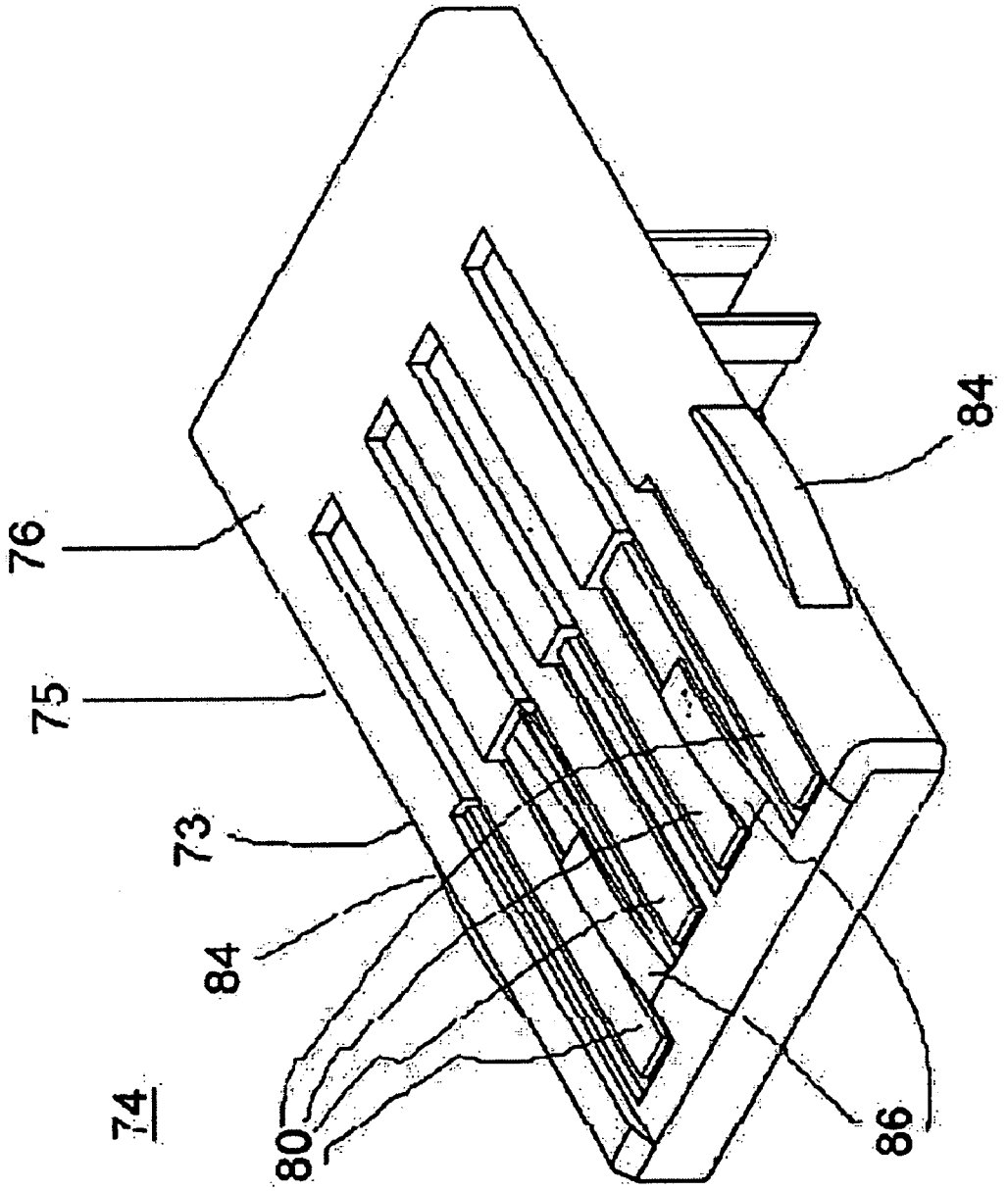

Fig. 3a

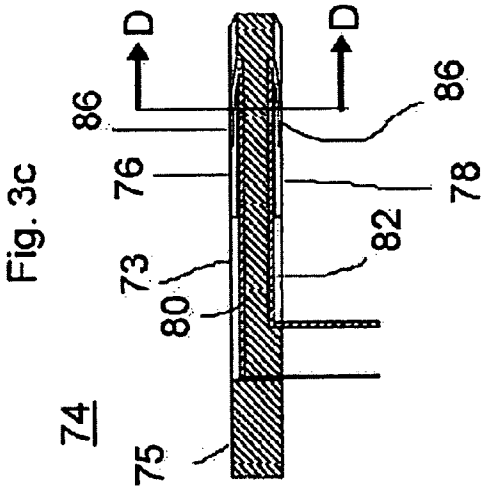

Fig. 3c

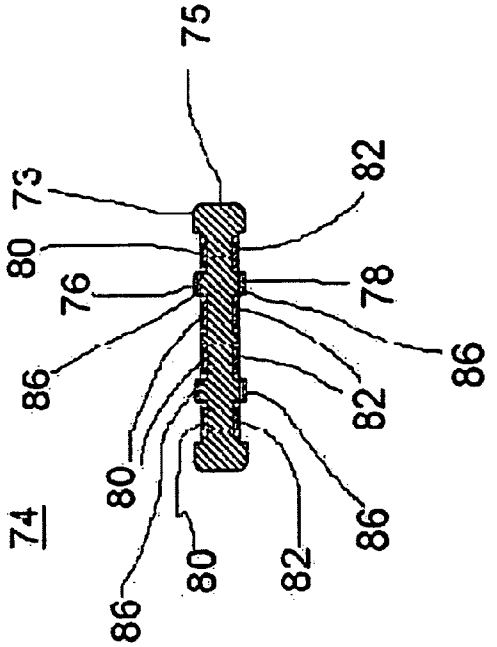

Fig. 3d

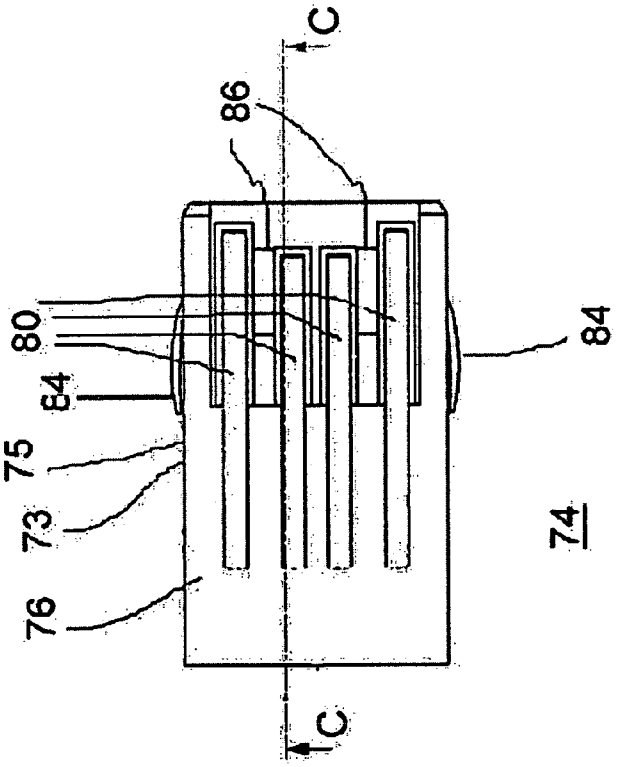

Fig. 3b

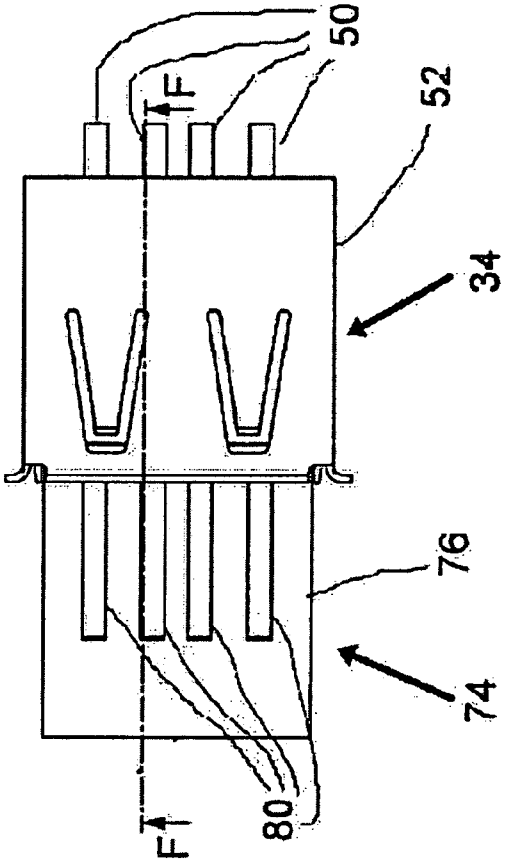

Fig. 3e

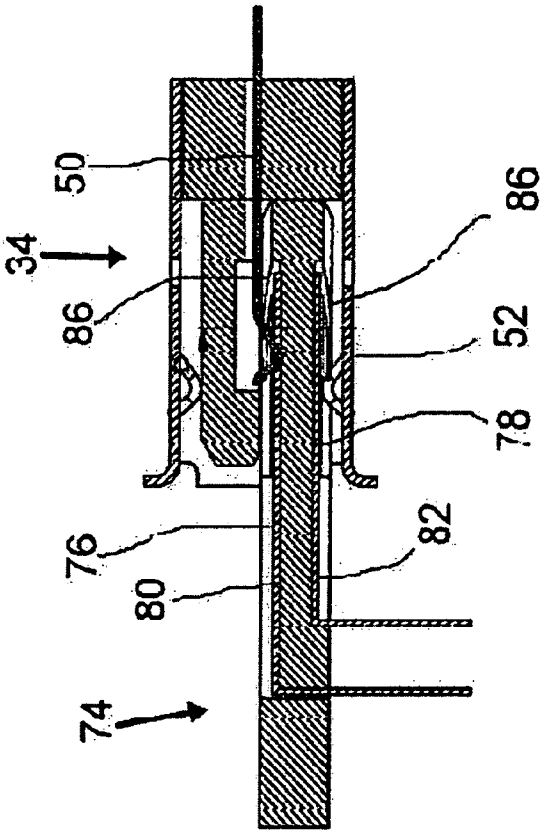

Fig. 3f

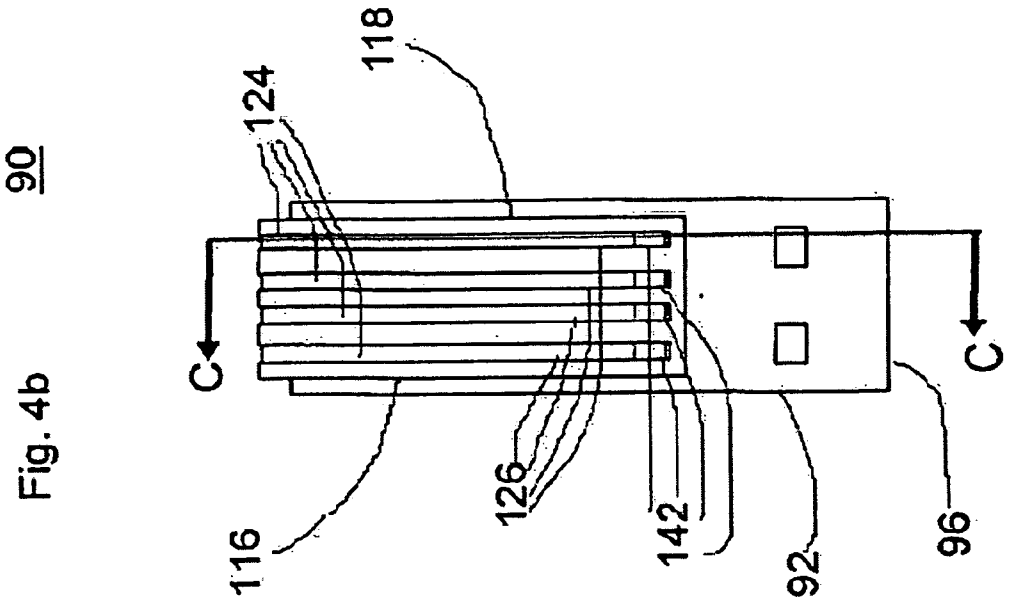
90
118
124
C
C
116
126
142
92
96

Fig. 4b

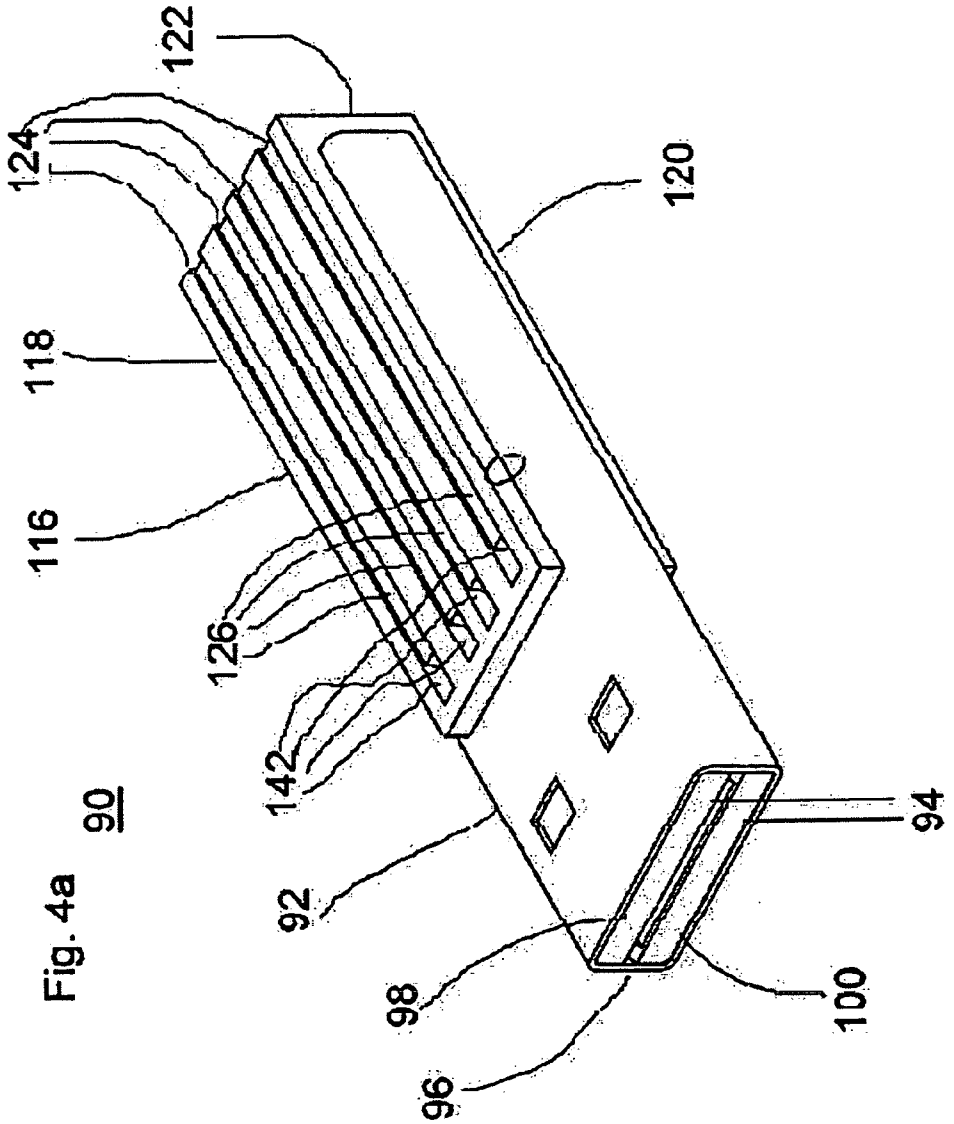
122
124
120
118
116
126
142
90
92
98
96
94
100

Fig. 4a

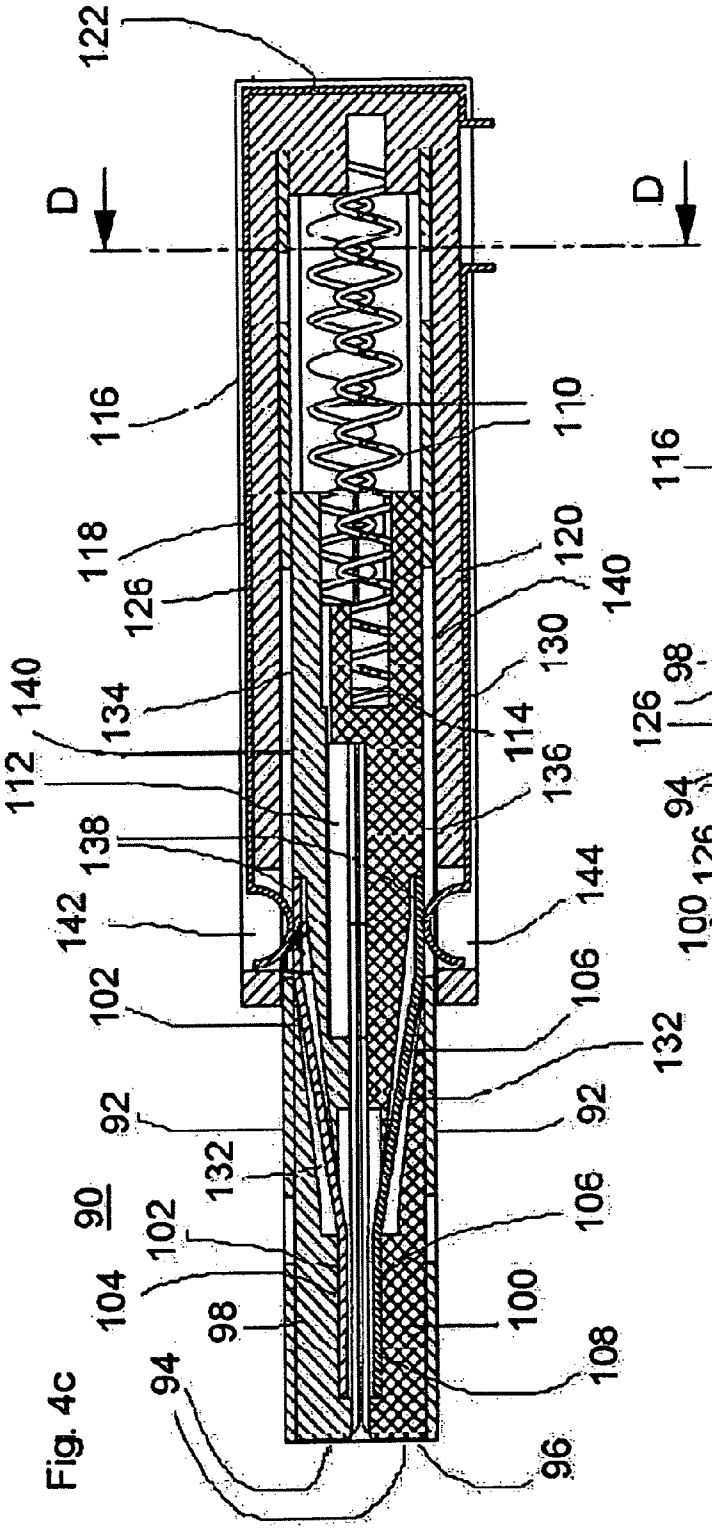
122
D
D
116
118
126
140
134
112
138
142
102
92
90
132
102
104
98
94
110
120
140
130
114
136
144
106
132
92
106
100
108
96

Fig. 4c

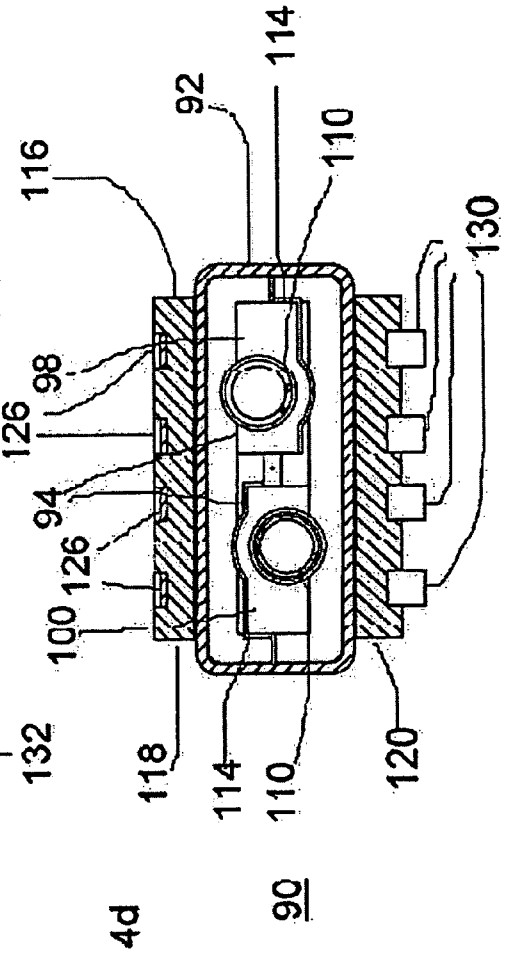
92
114
110
116
130
98
126
94
126
100
118
114
110
120
90

Fig. 4d

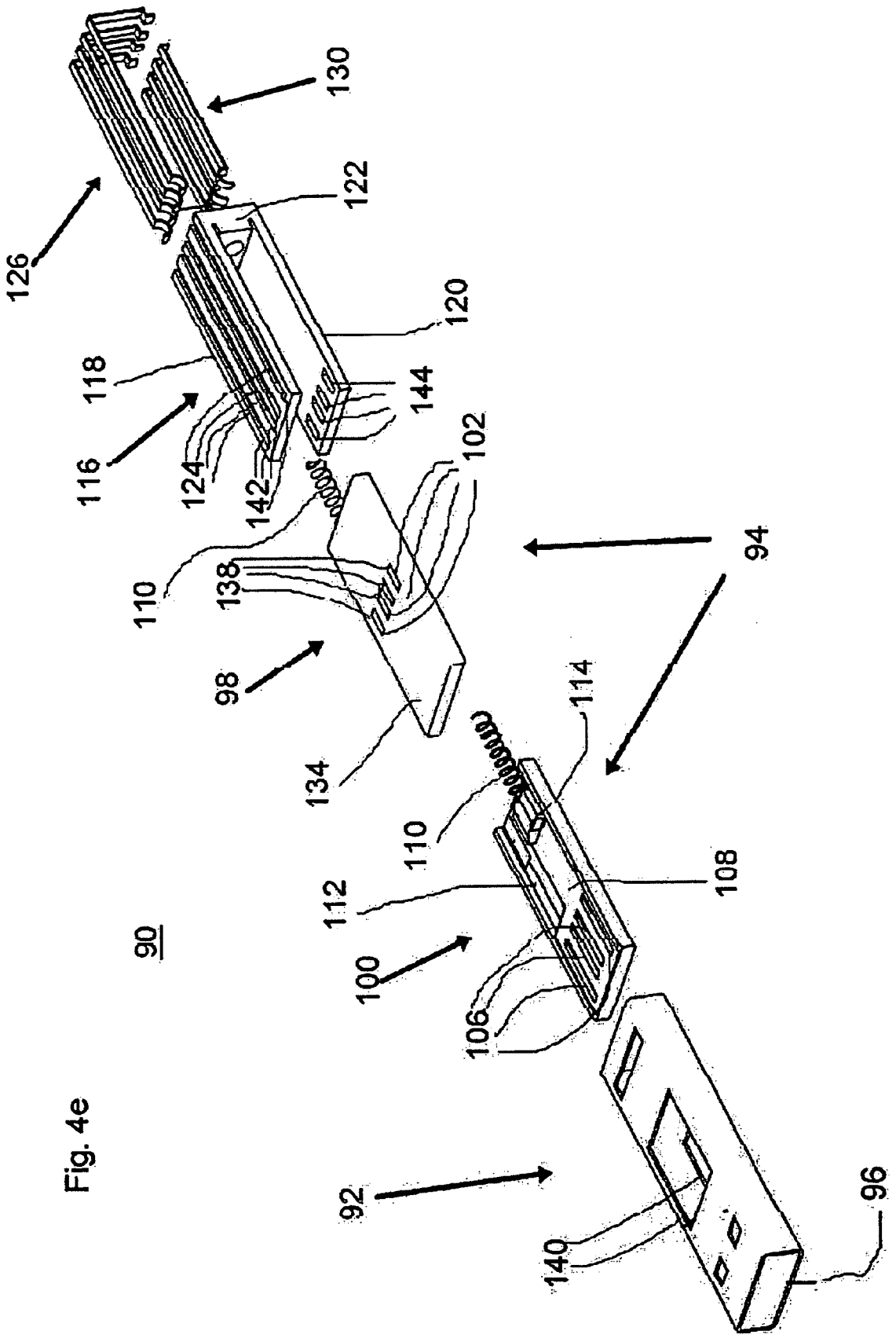
130
122
126
120
118
144
116
124
142
102
110
138
94
98
134
114
110
108
112
90
100
106
92
96
140

Fig. 4e

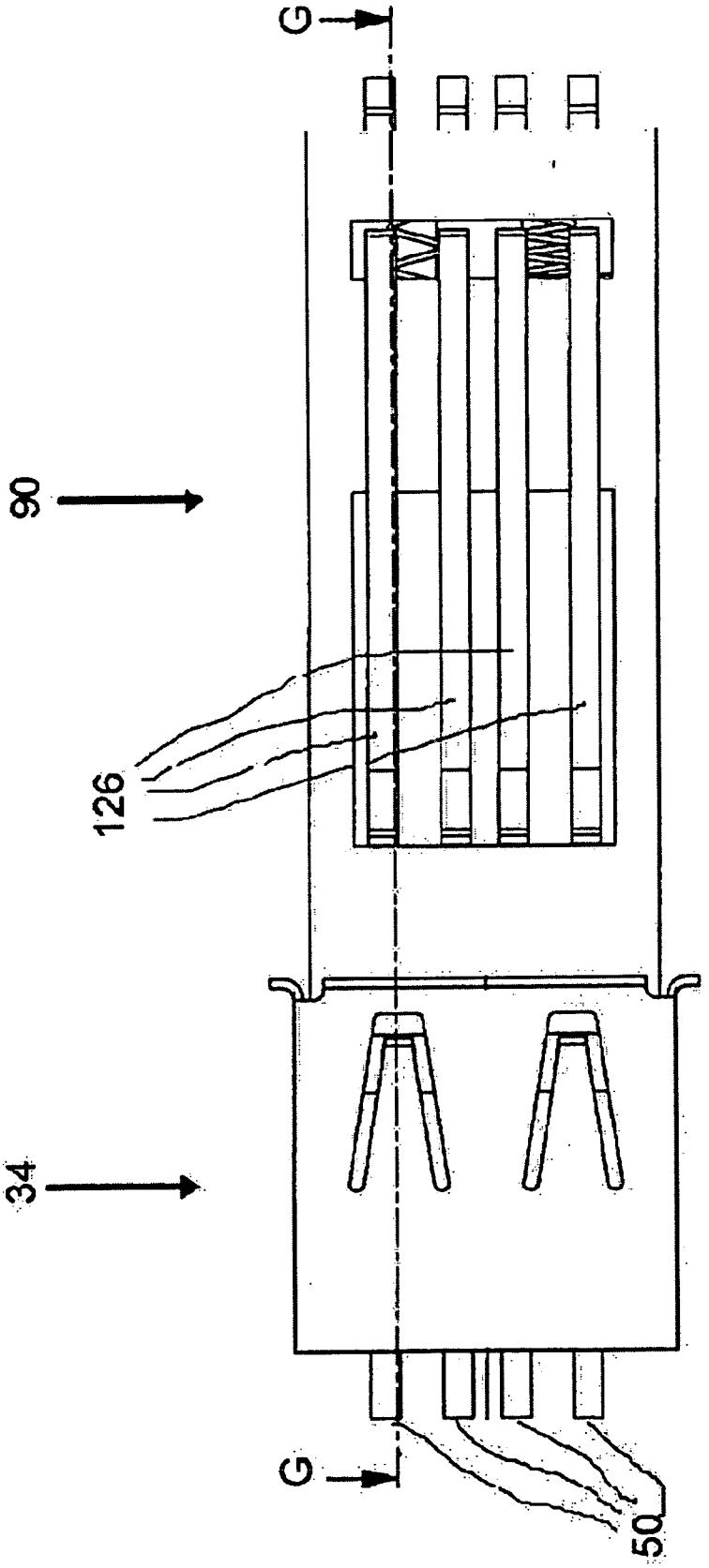

Fig. 4f

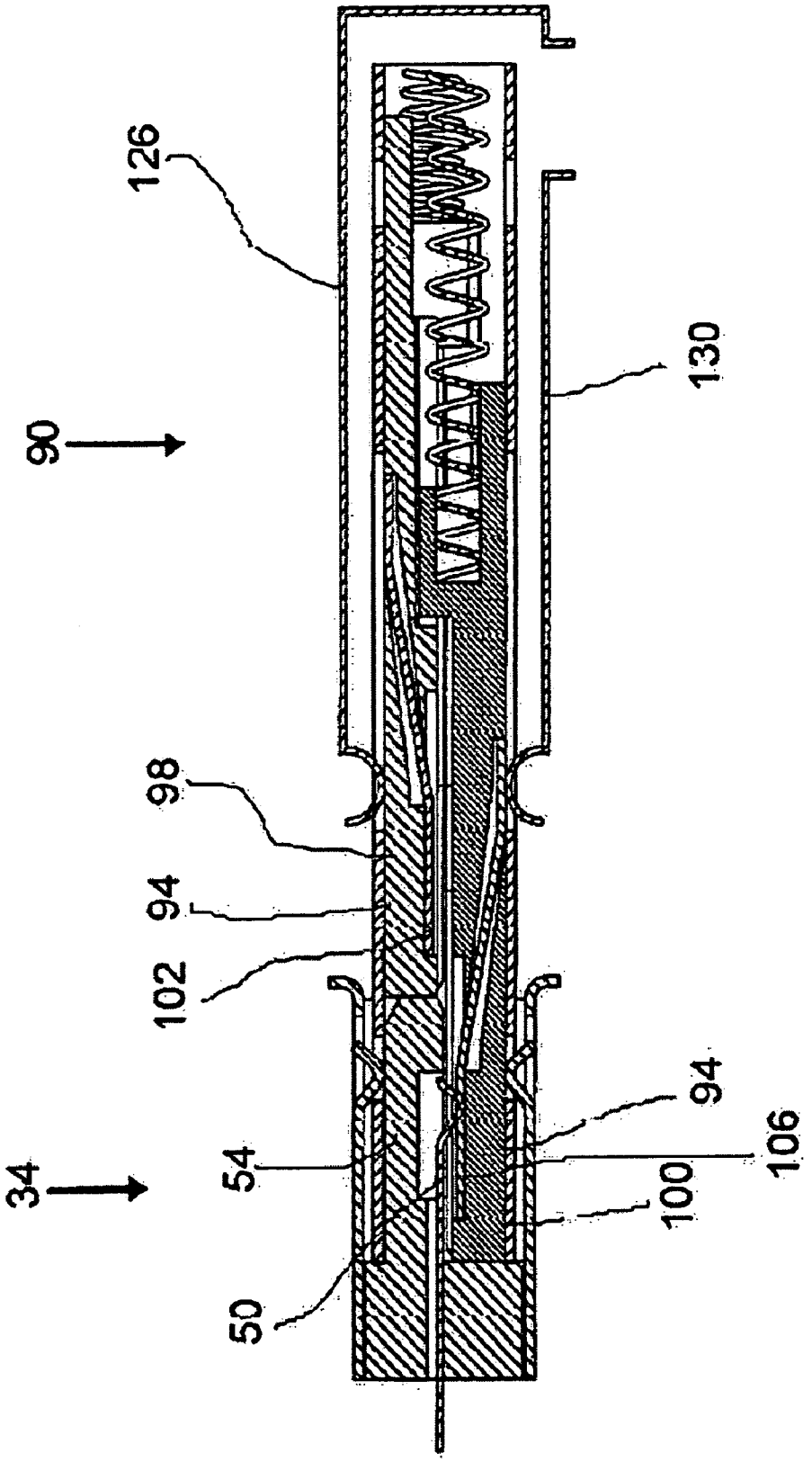

Fig. 4g

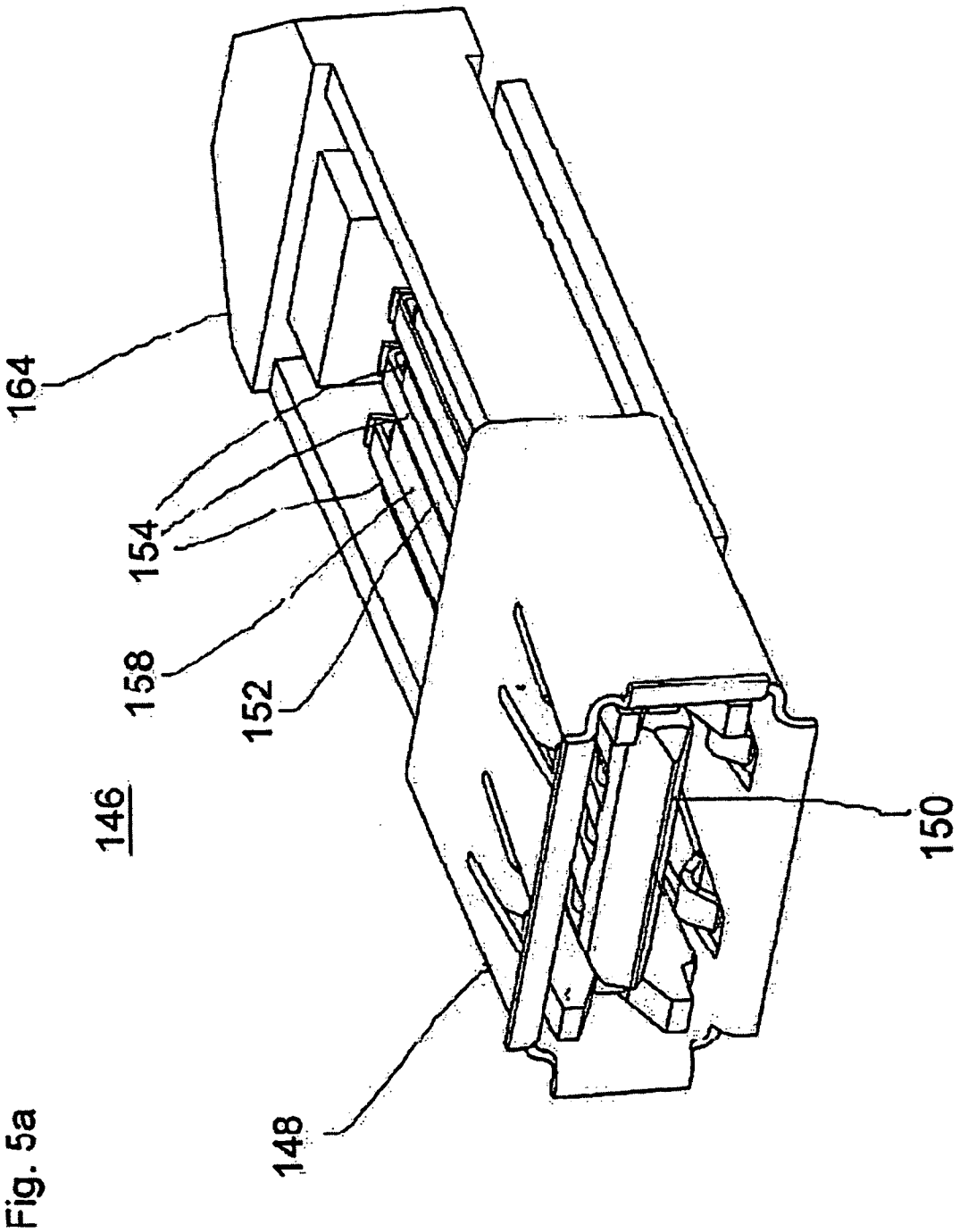

Fig. 5a

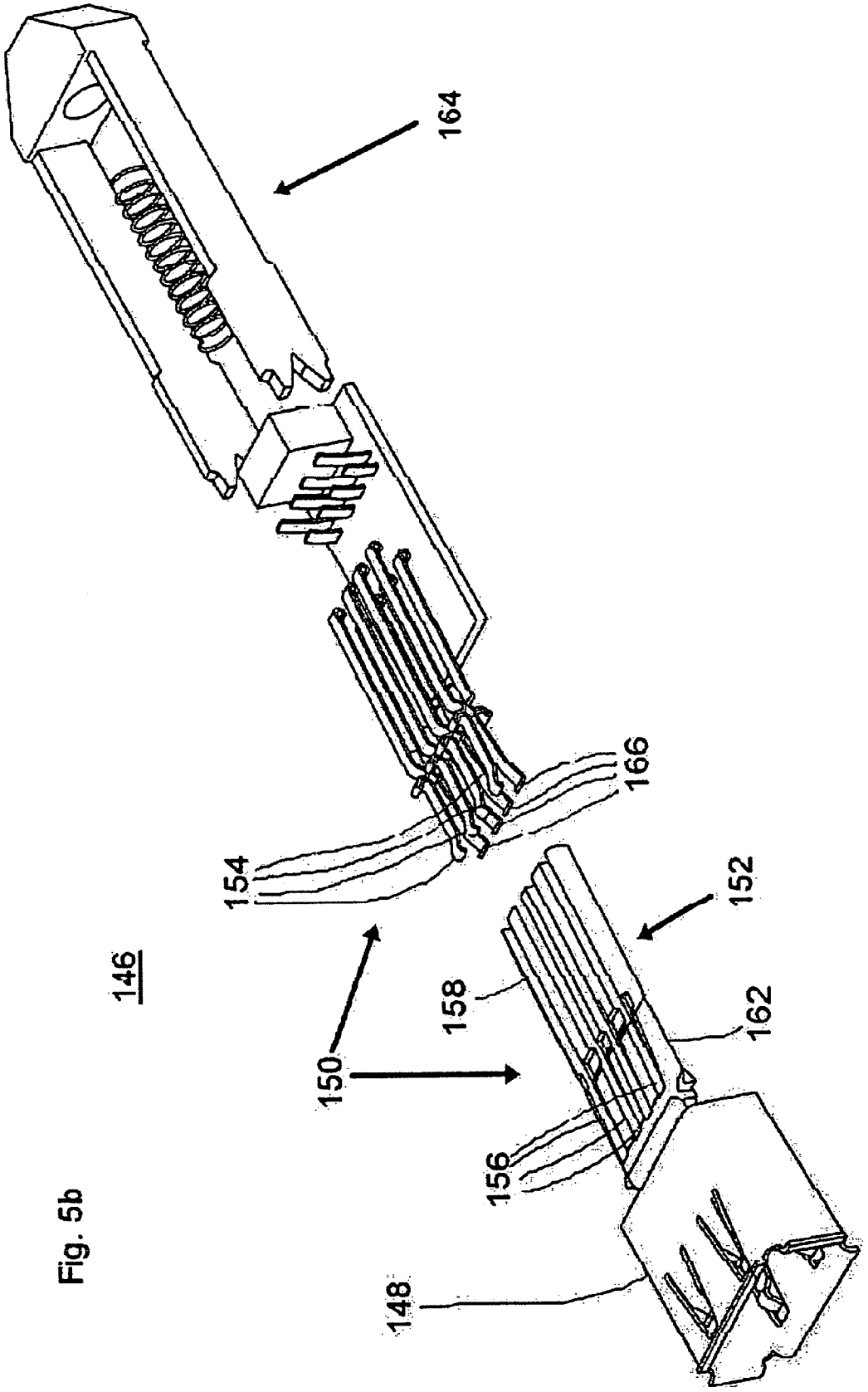

Fig. 5b

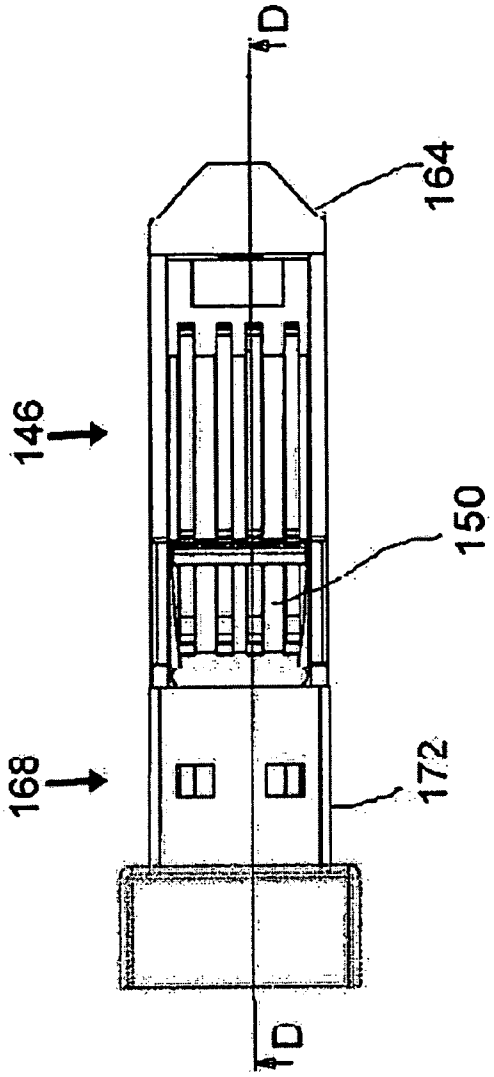

Fig. 5c

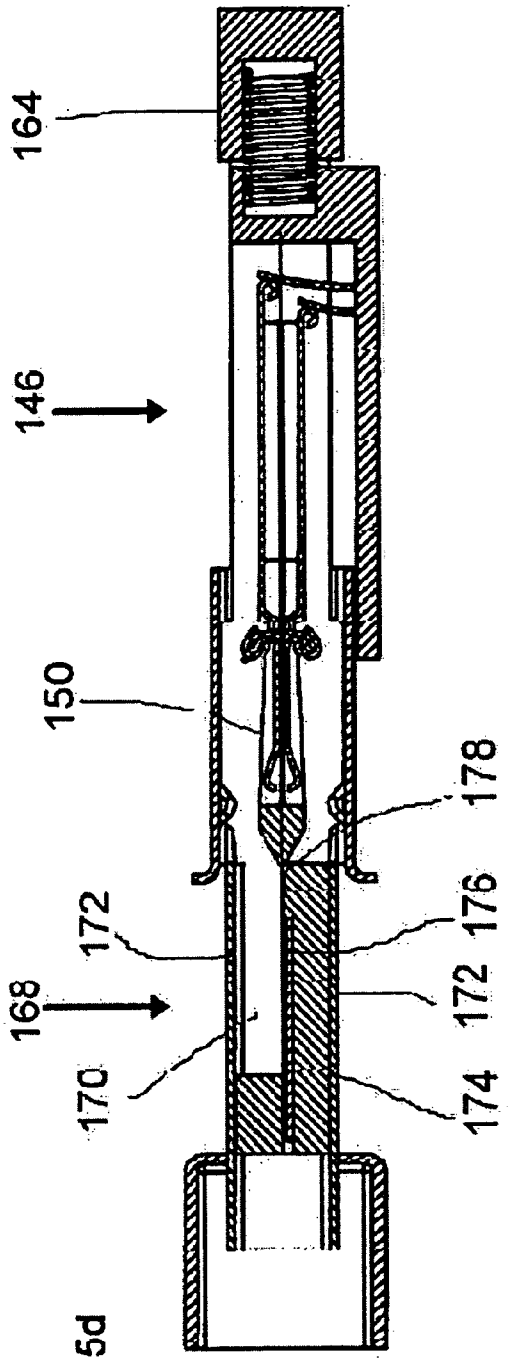

Fig. 5d

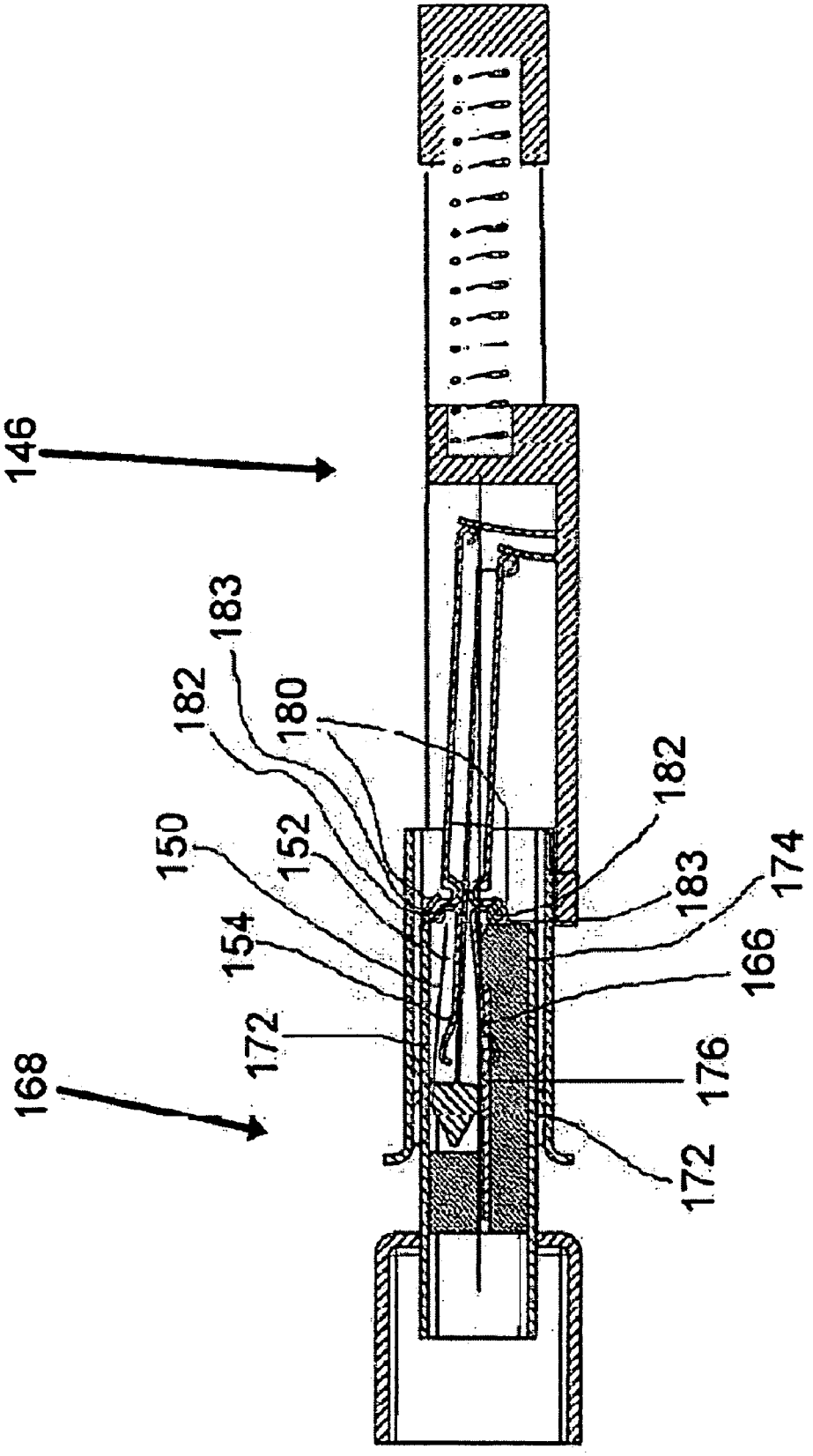

Fig. 5e

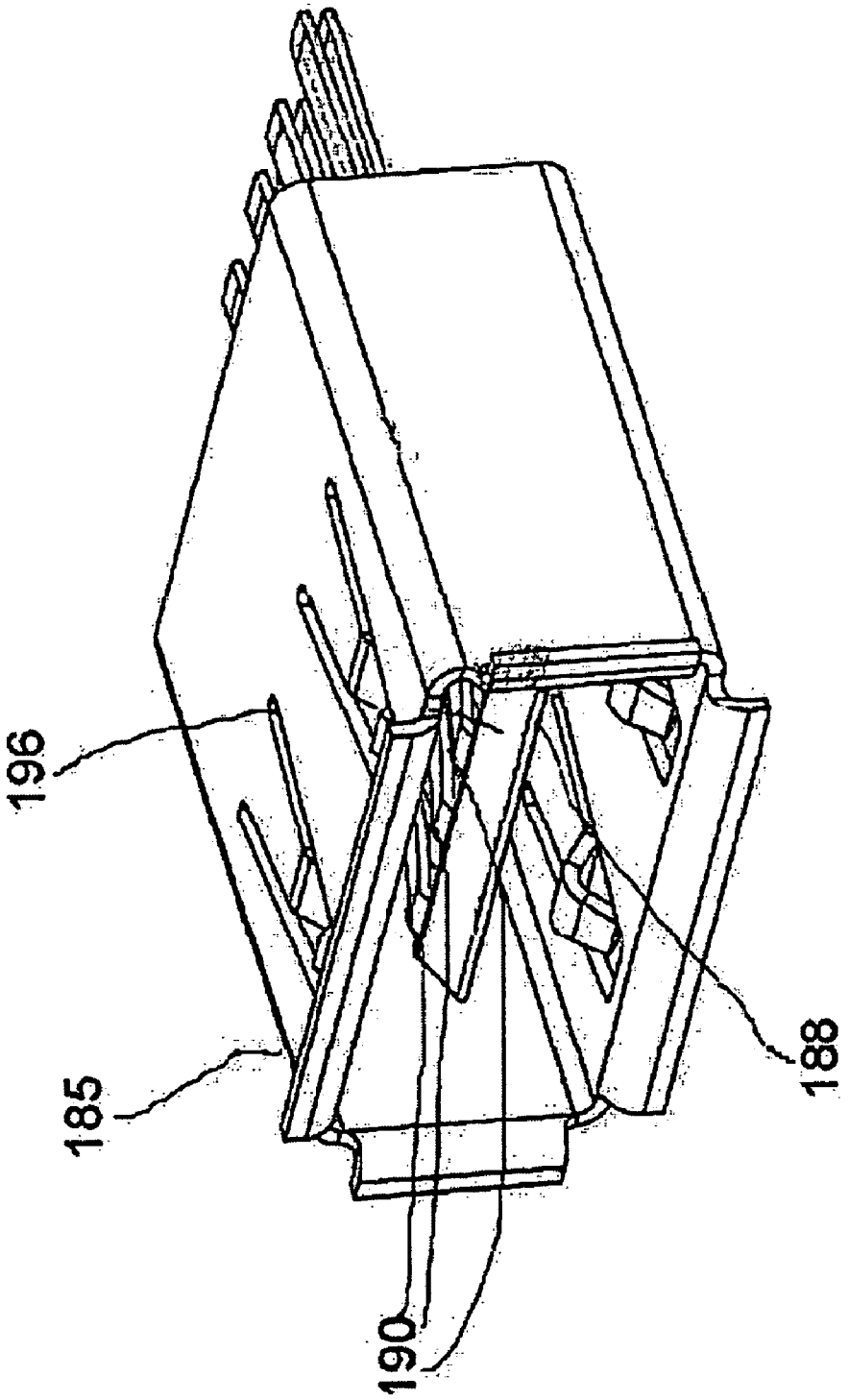

Fig. 6a

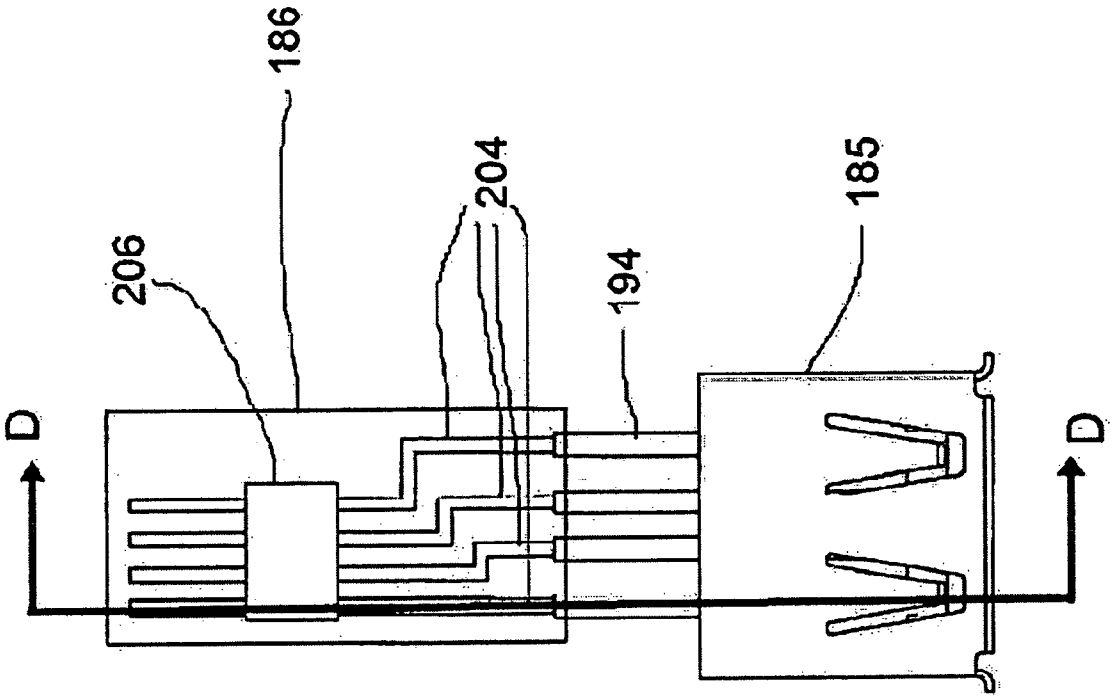

184

Fig. 6b

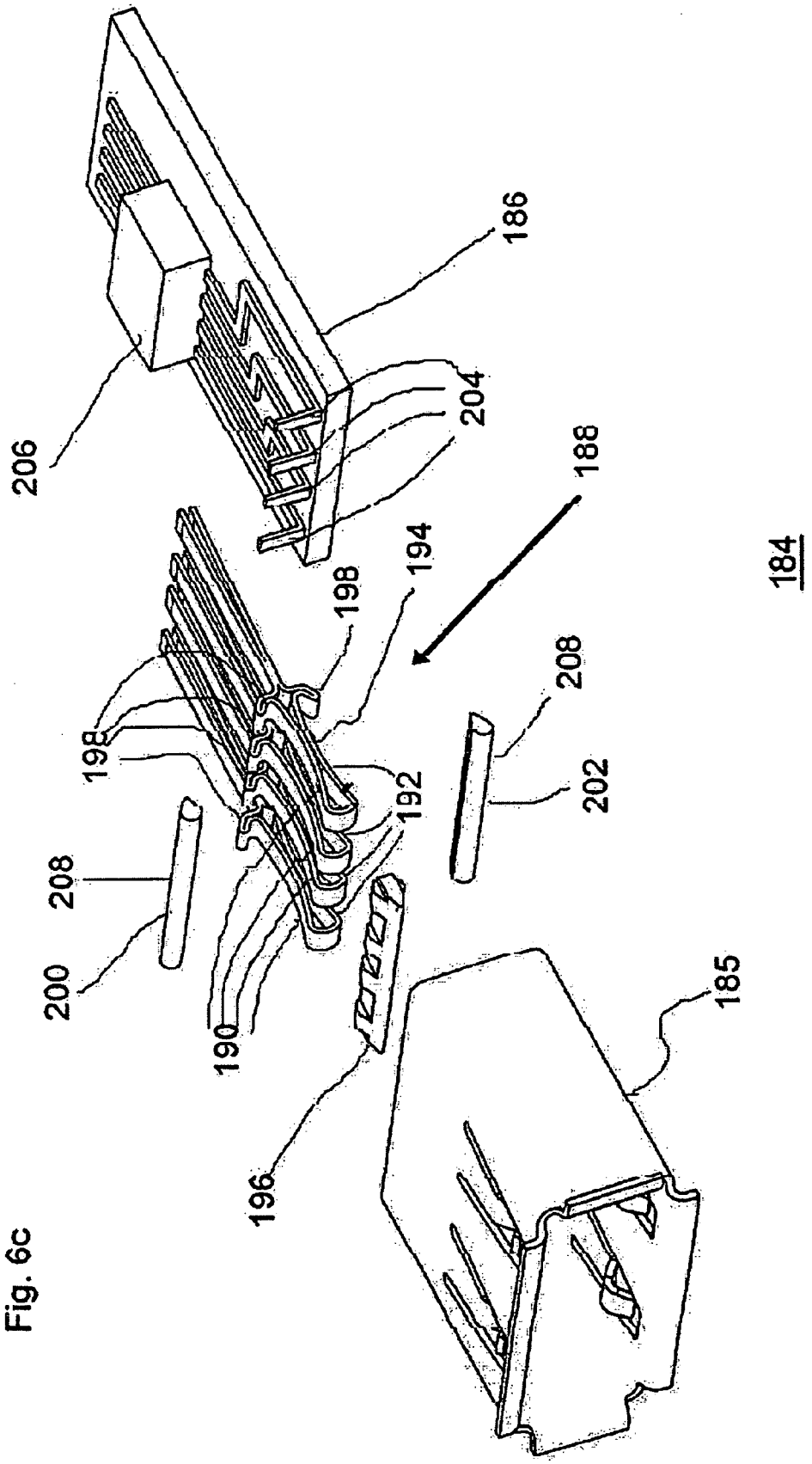

Fig. 6c

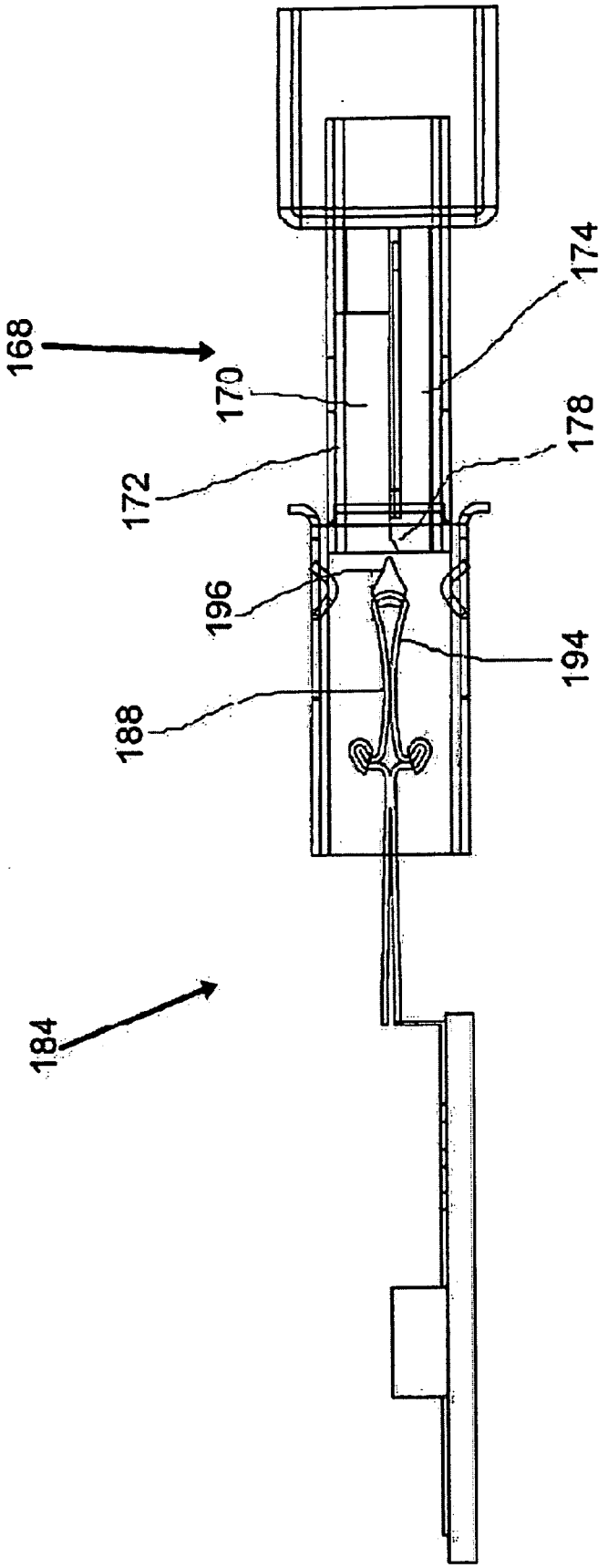

Fig. 6d

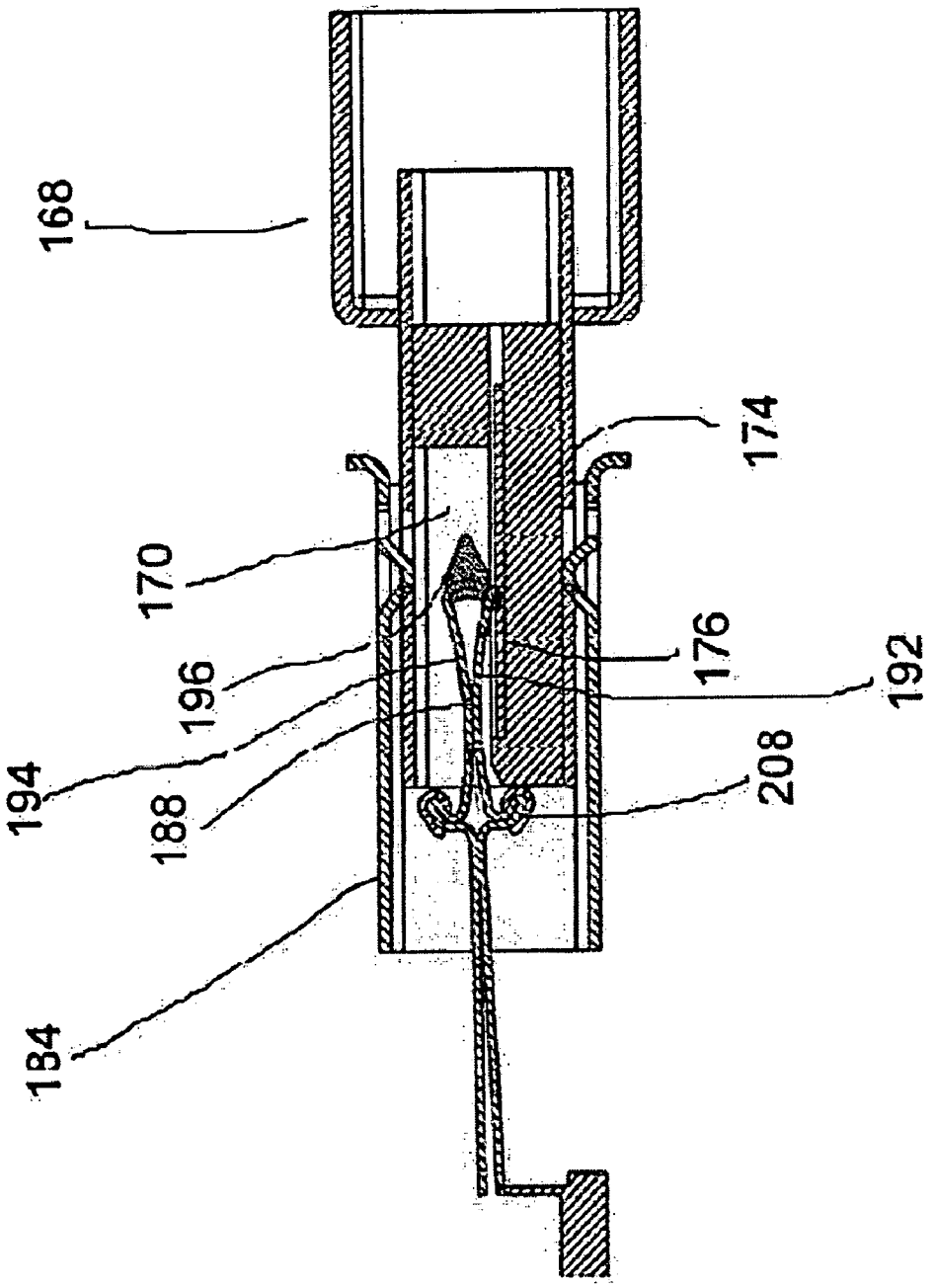

Fig. 6e

Fig. 6f

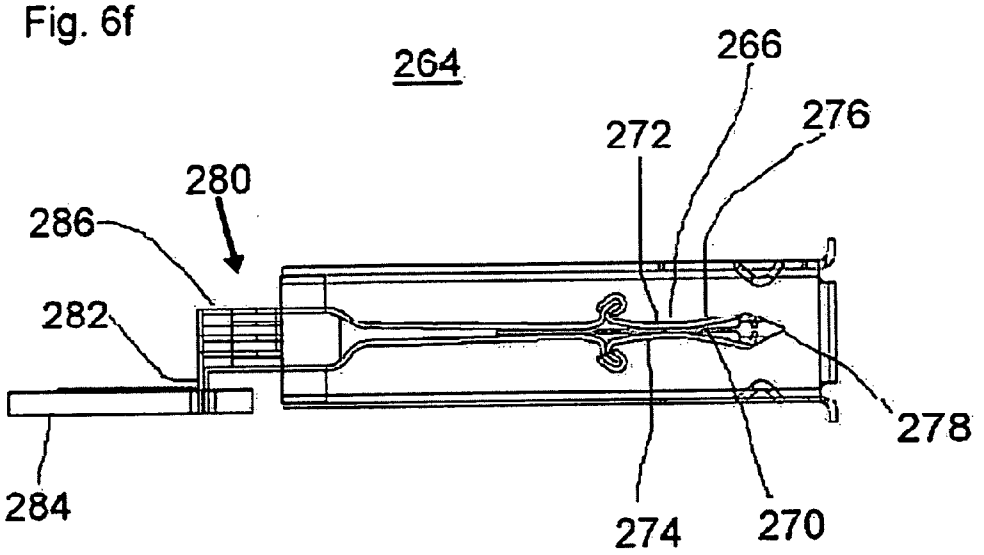
264
266
276
272
280
286
282
278
284
274
270

Fig. 6g

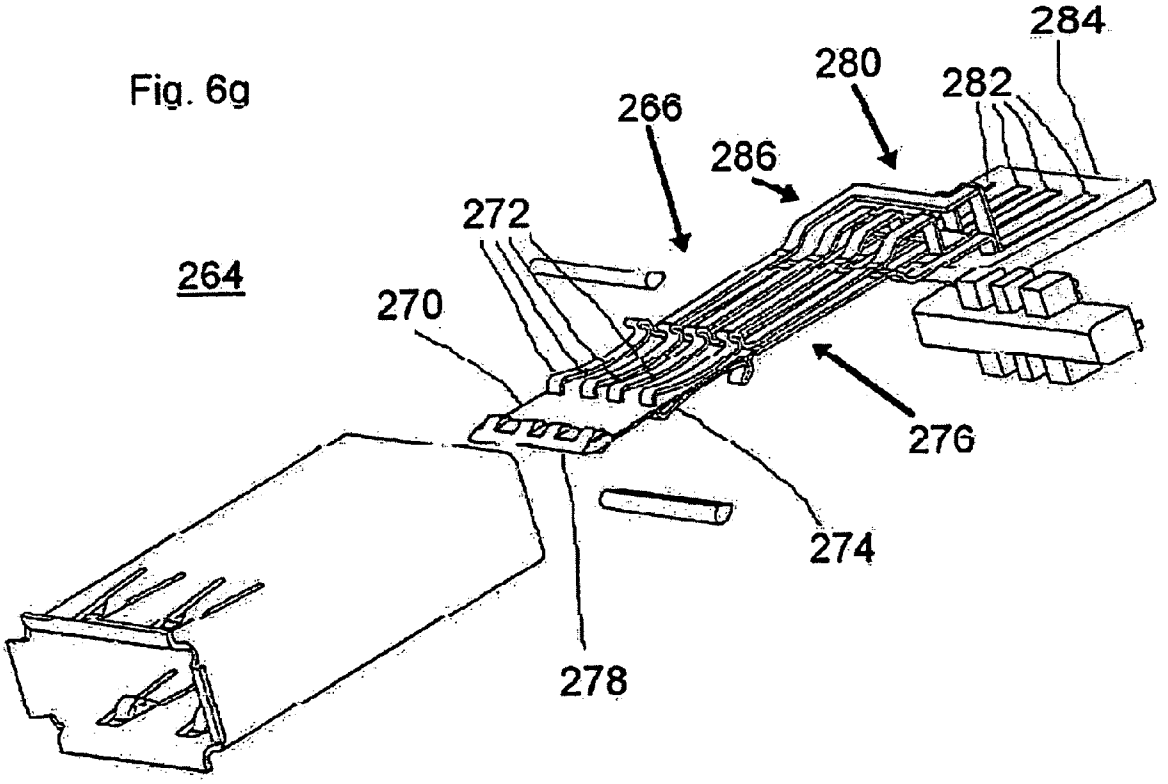
284
280
282
266
286
272
264
270
276
274
278

Fig. 6h

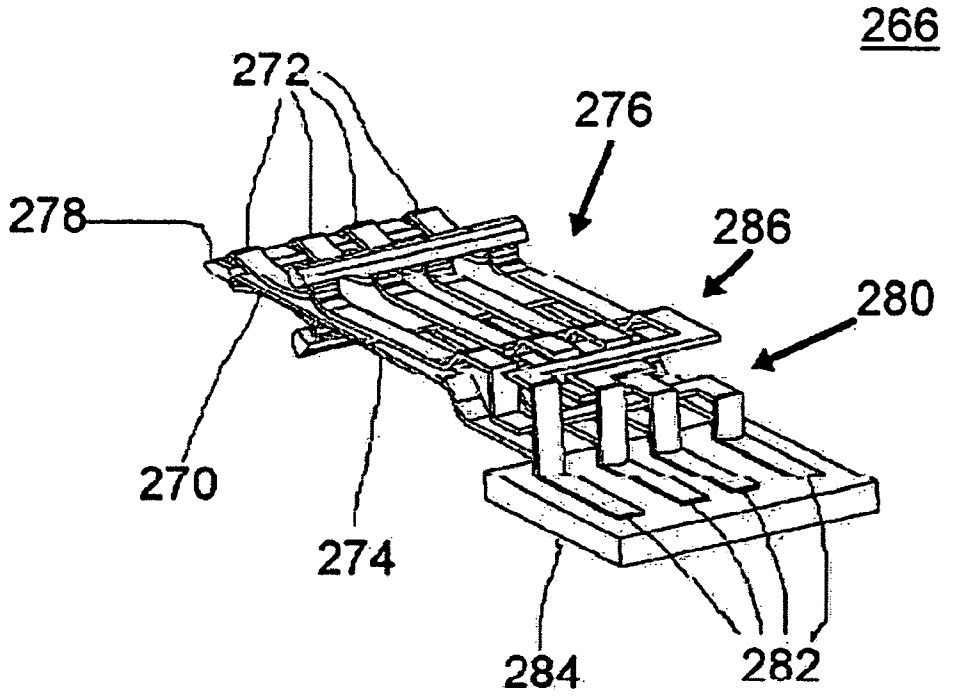
266
272
276
278
286
280
270
274
284
282

Fig. 6i

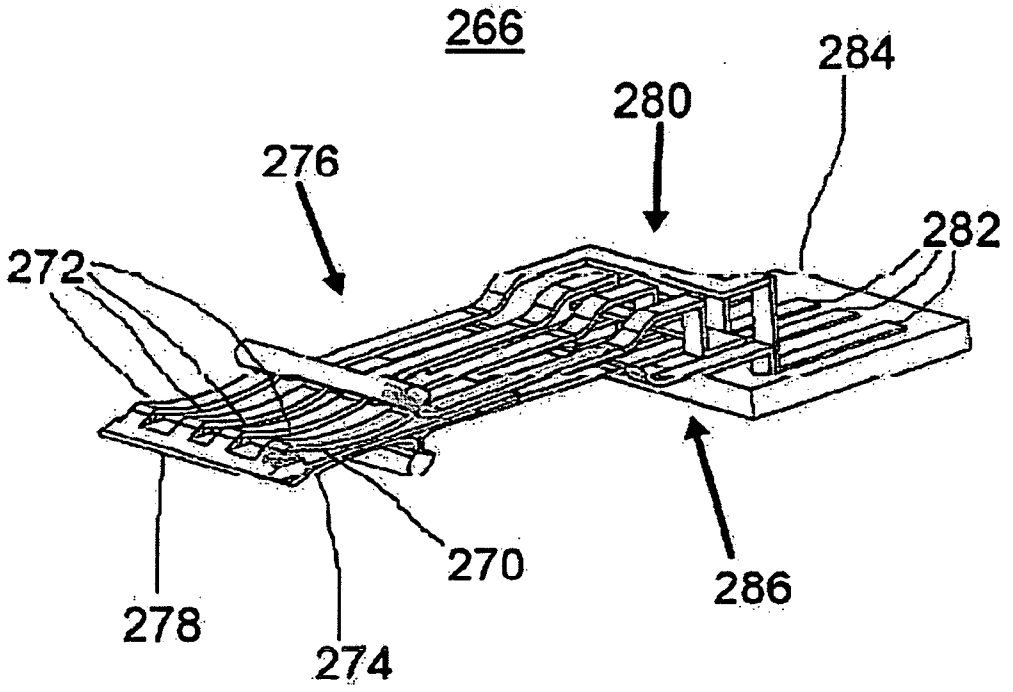
266
284
280
276
282
272
270
286
278
274

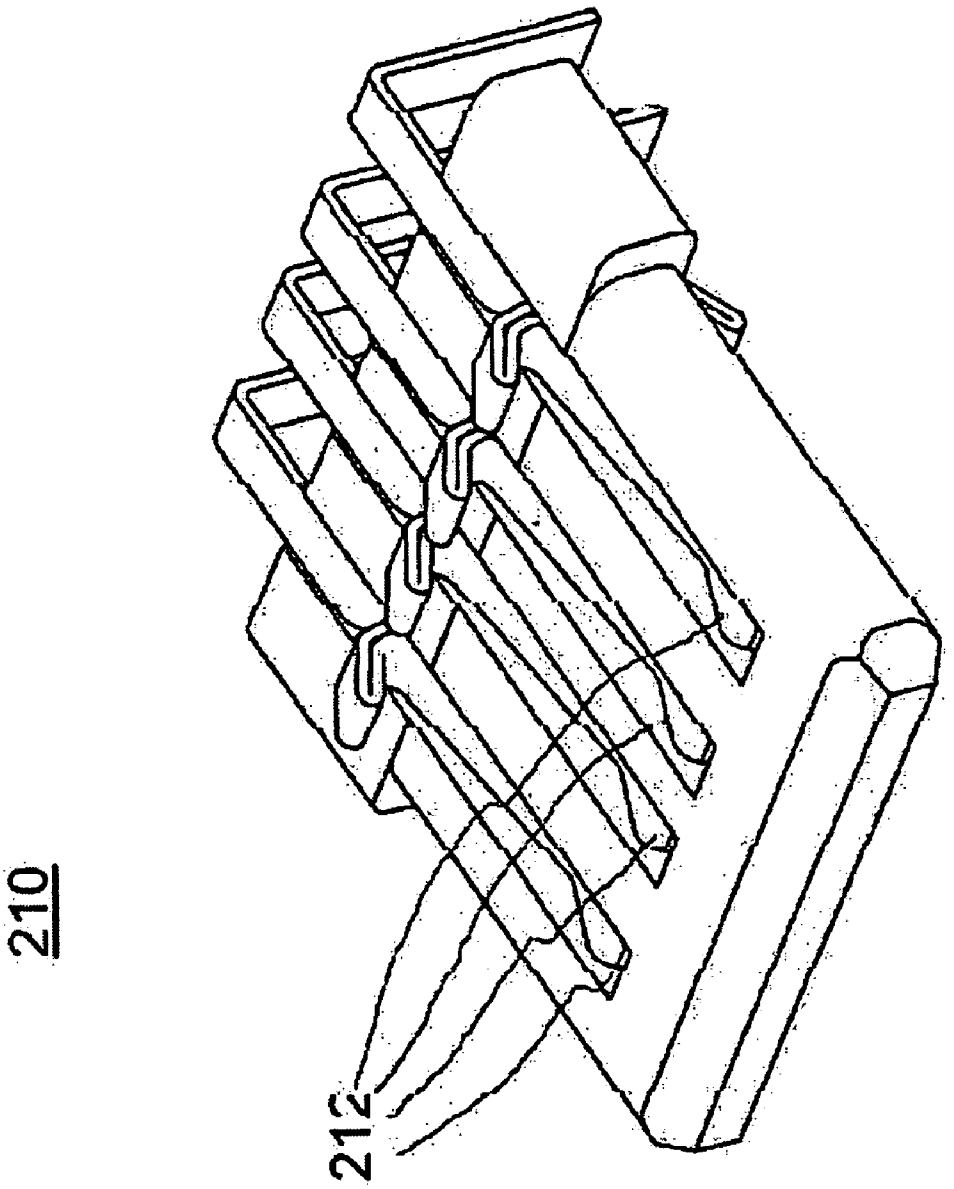

Fig. 7a

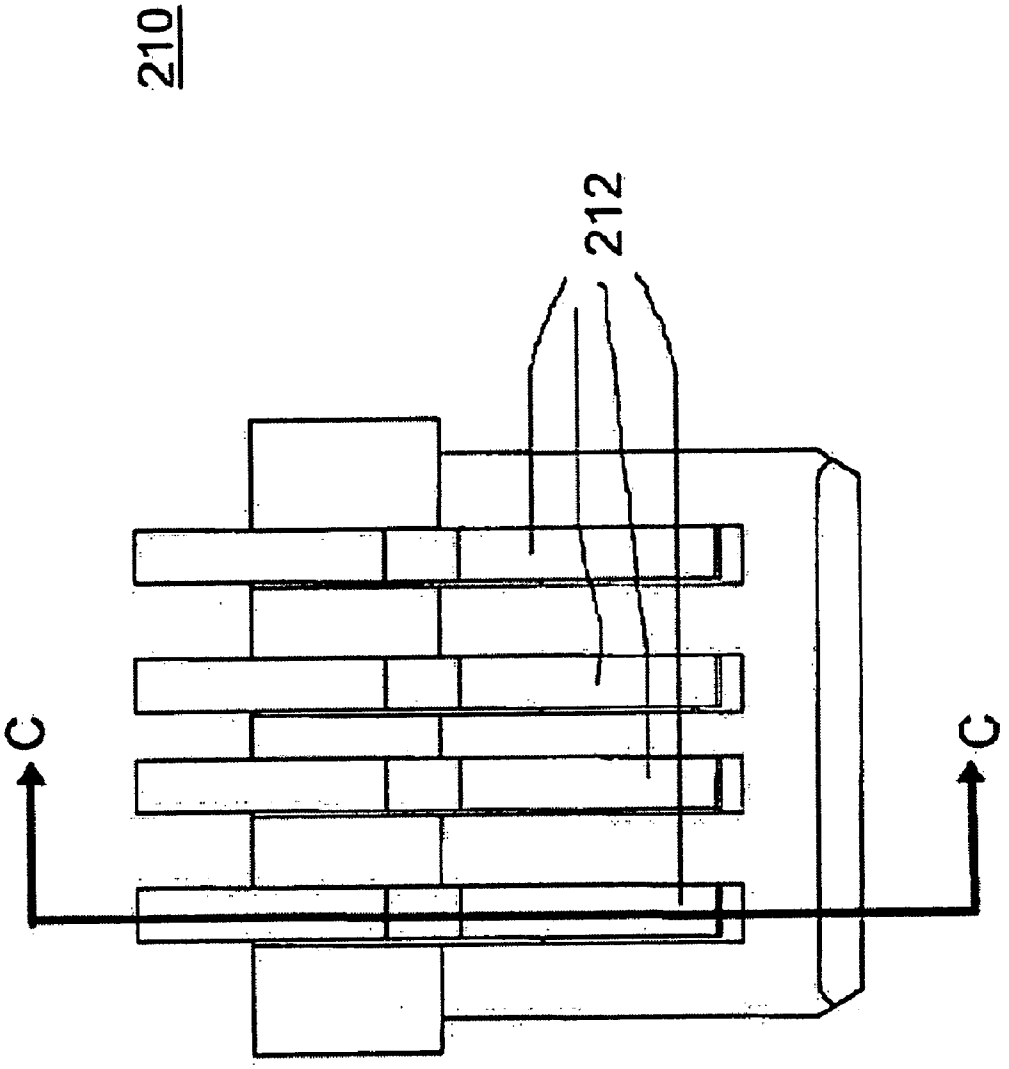

Fig. 7b

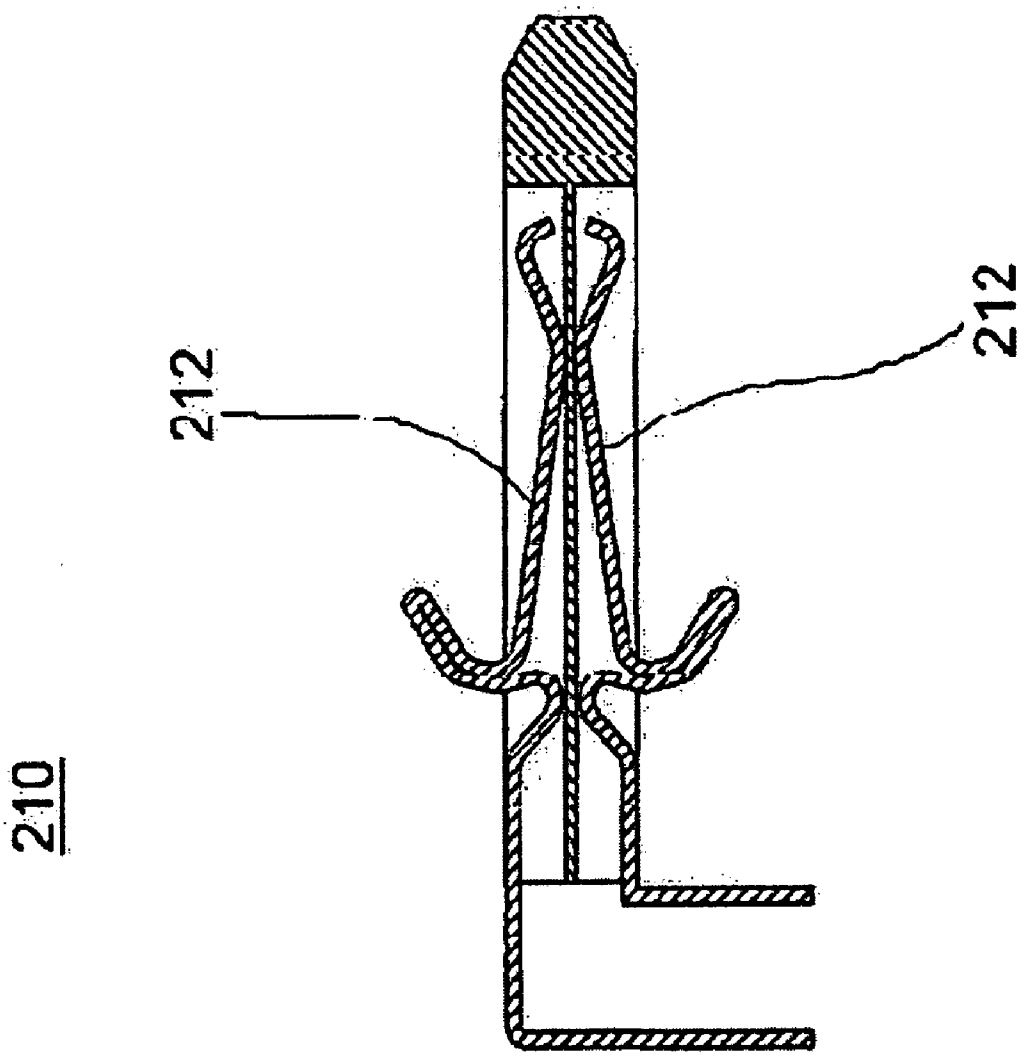

Fig. 7c

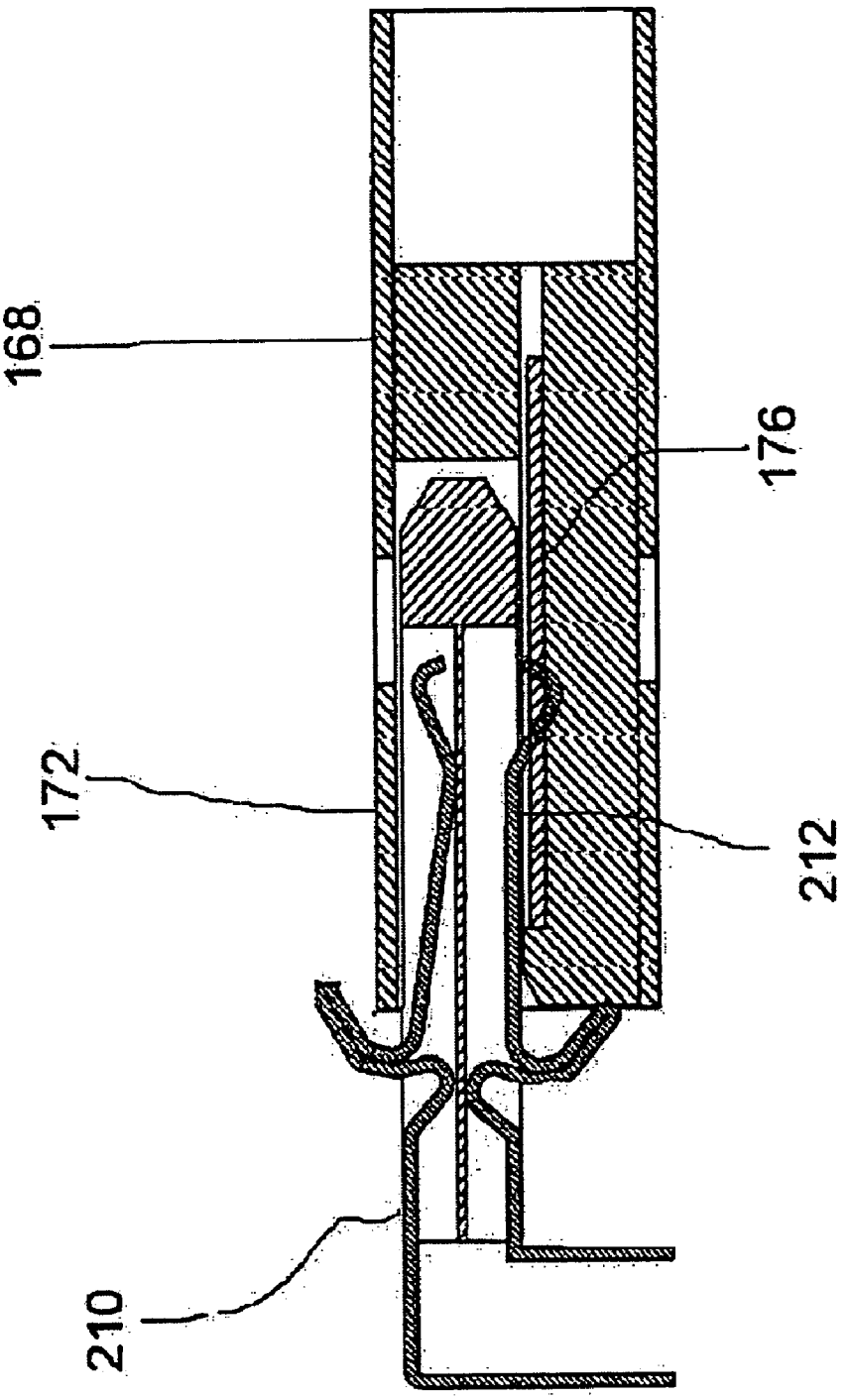

Fig. 7d

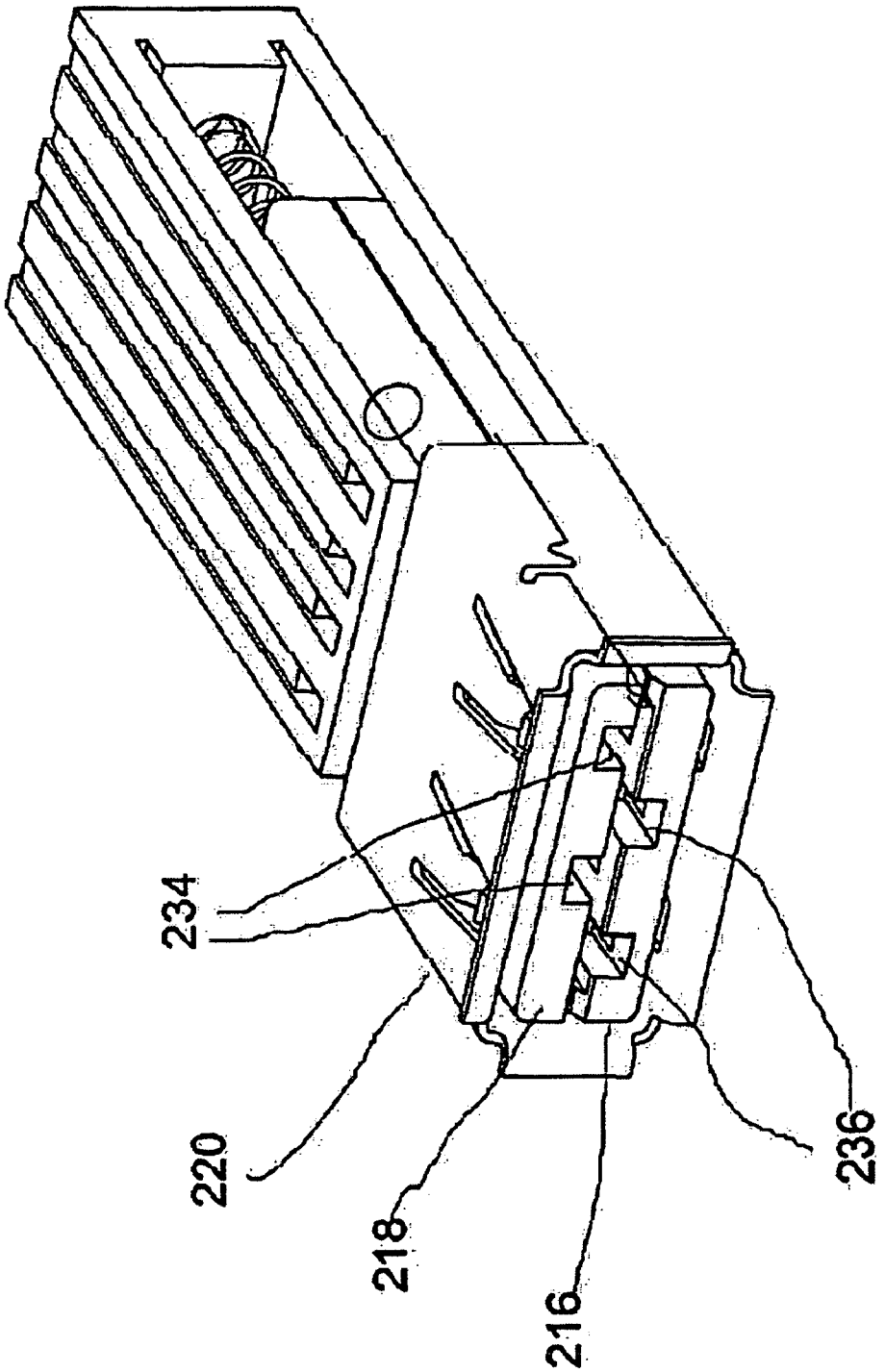

Fig. 8a

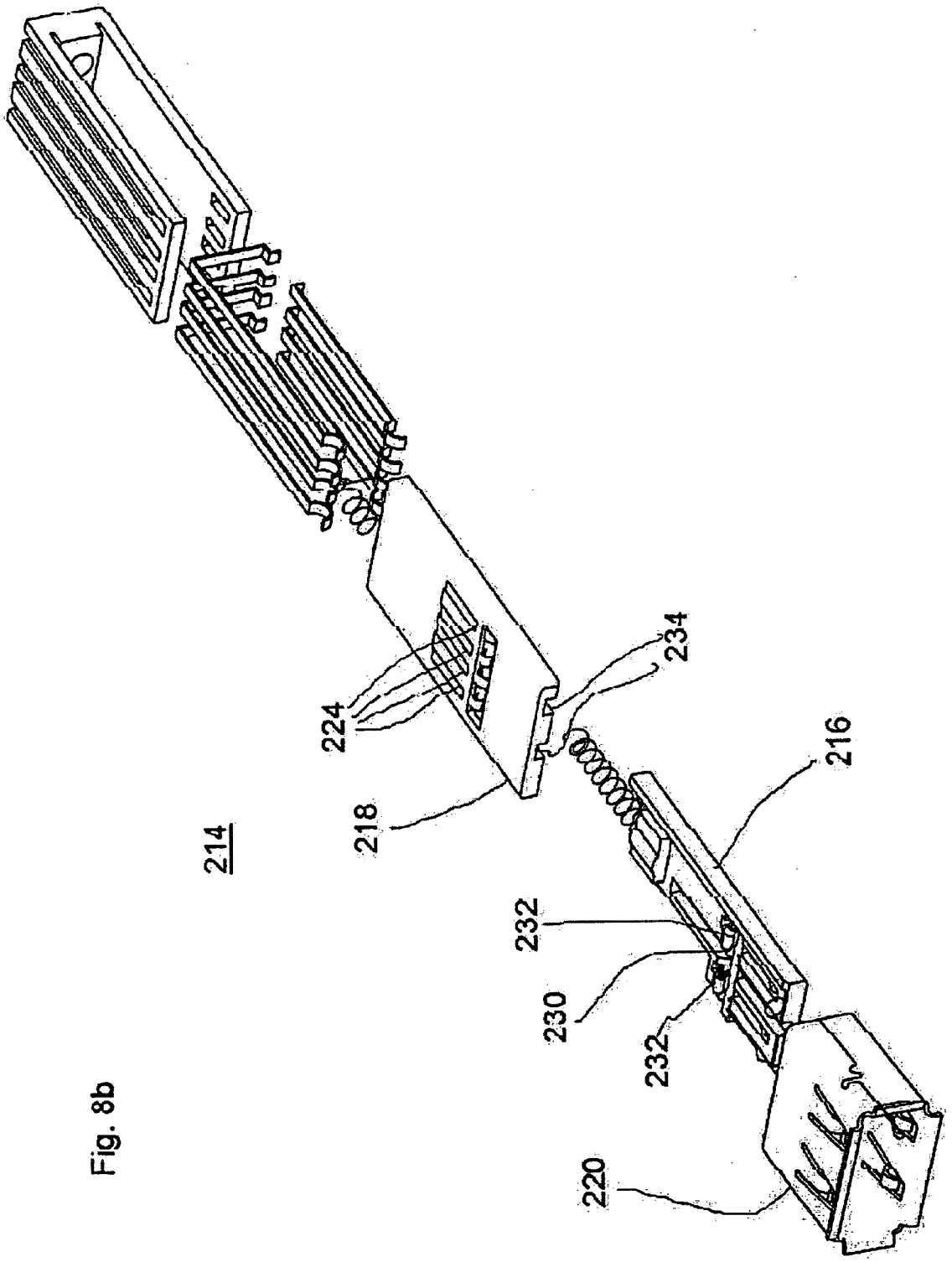

Fig. 8b

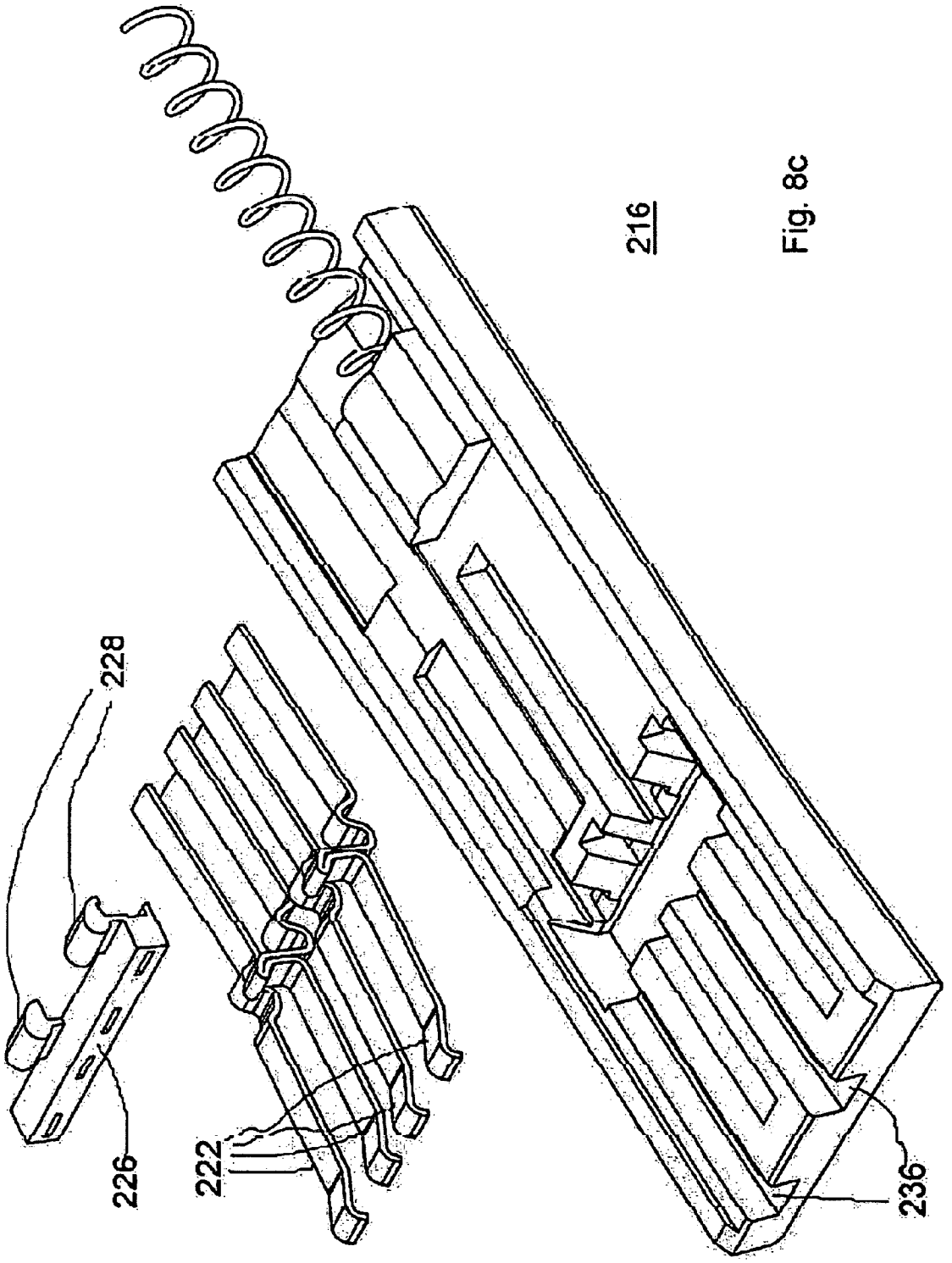

Fig. 8c

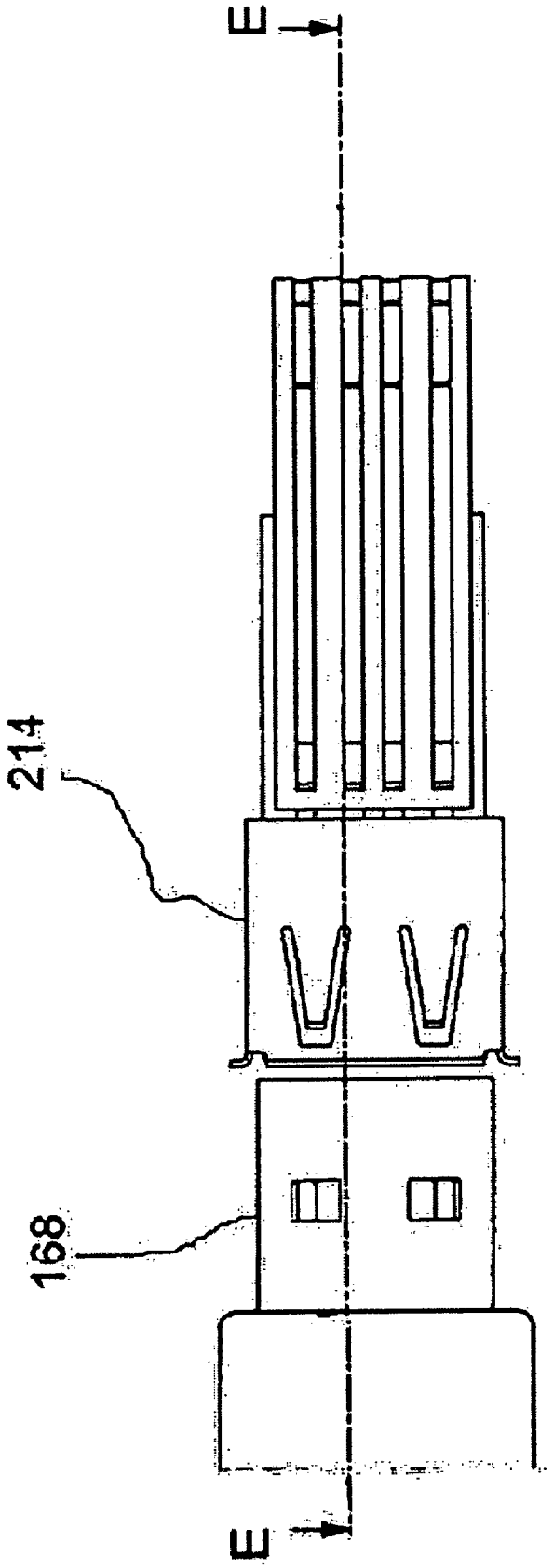

Fig. 8d

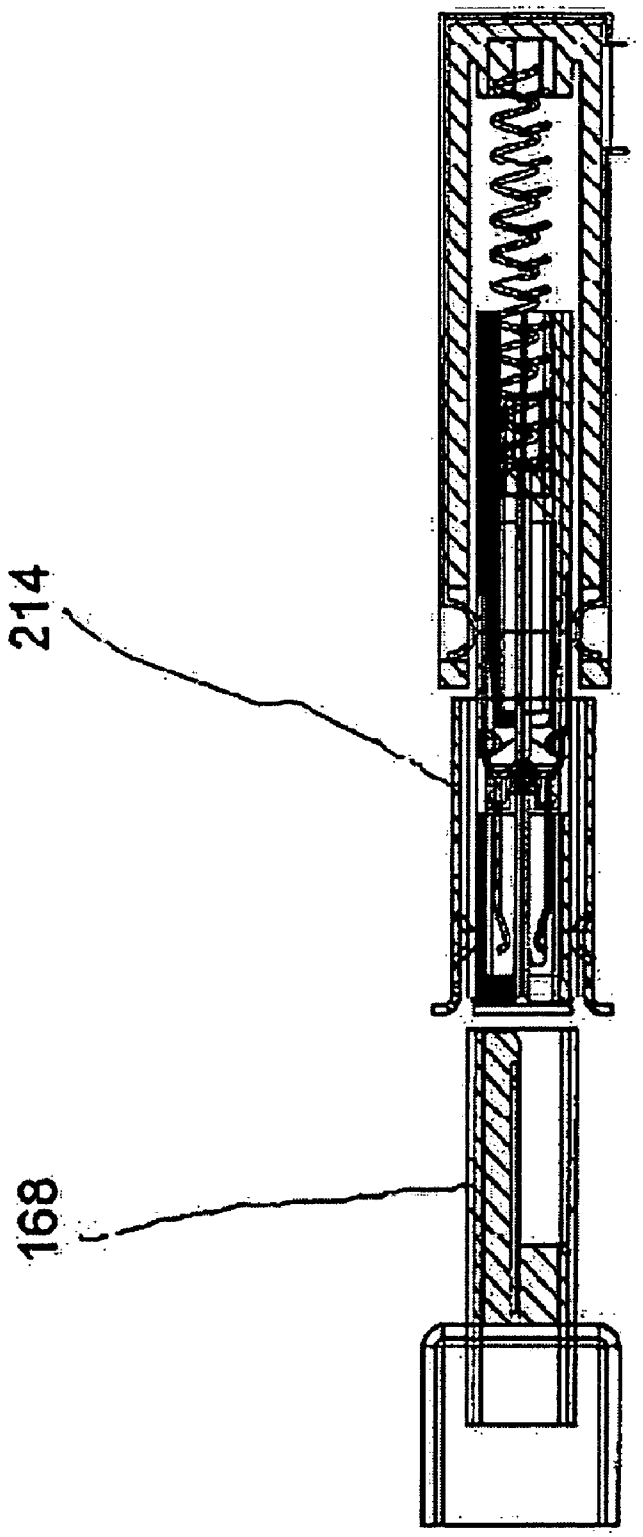

Fig. 8e

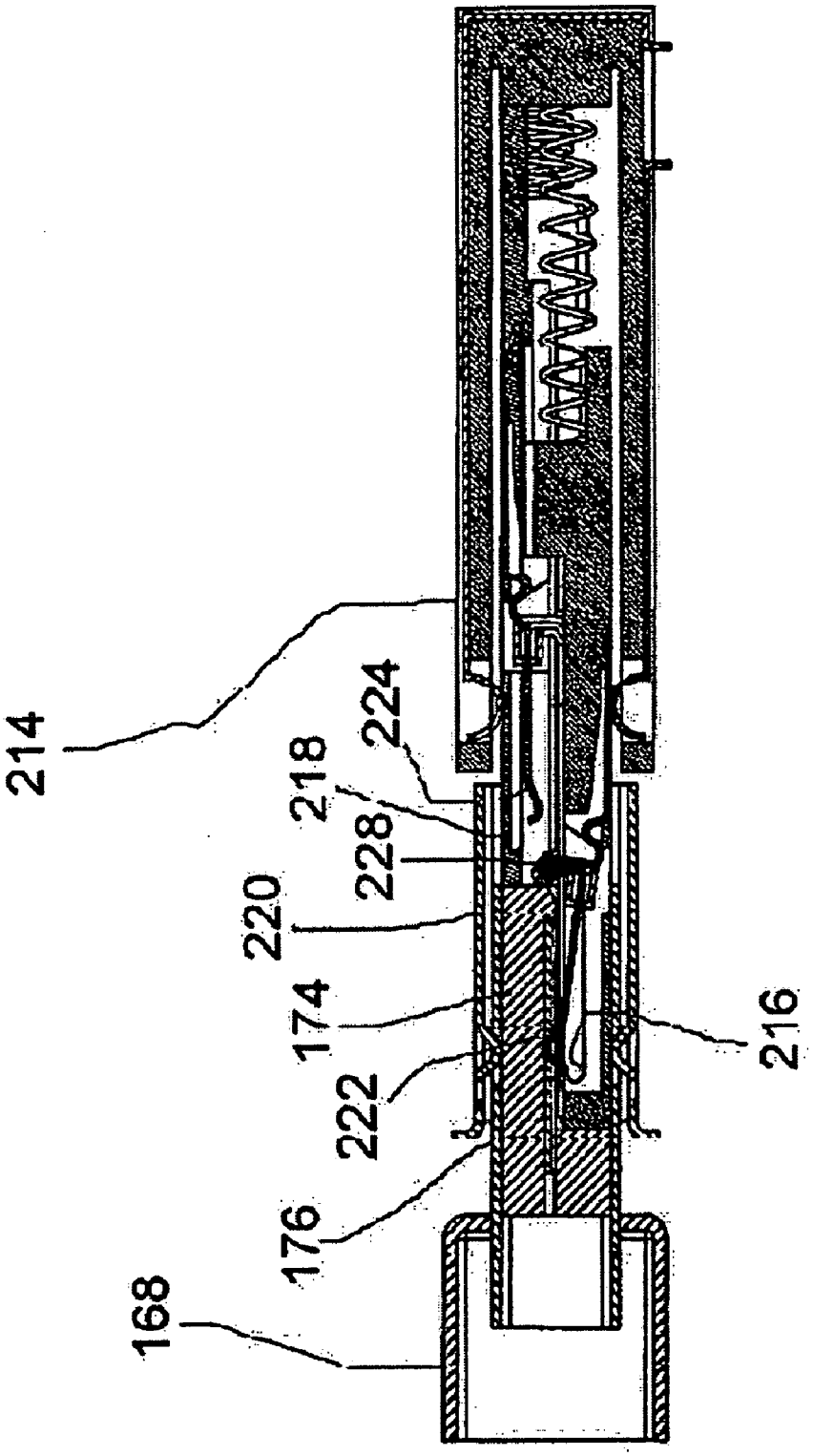

Fig. 8f

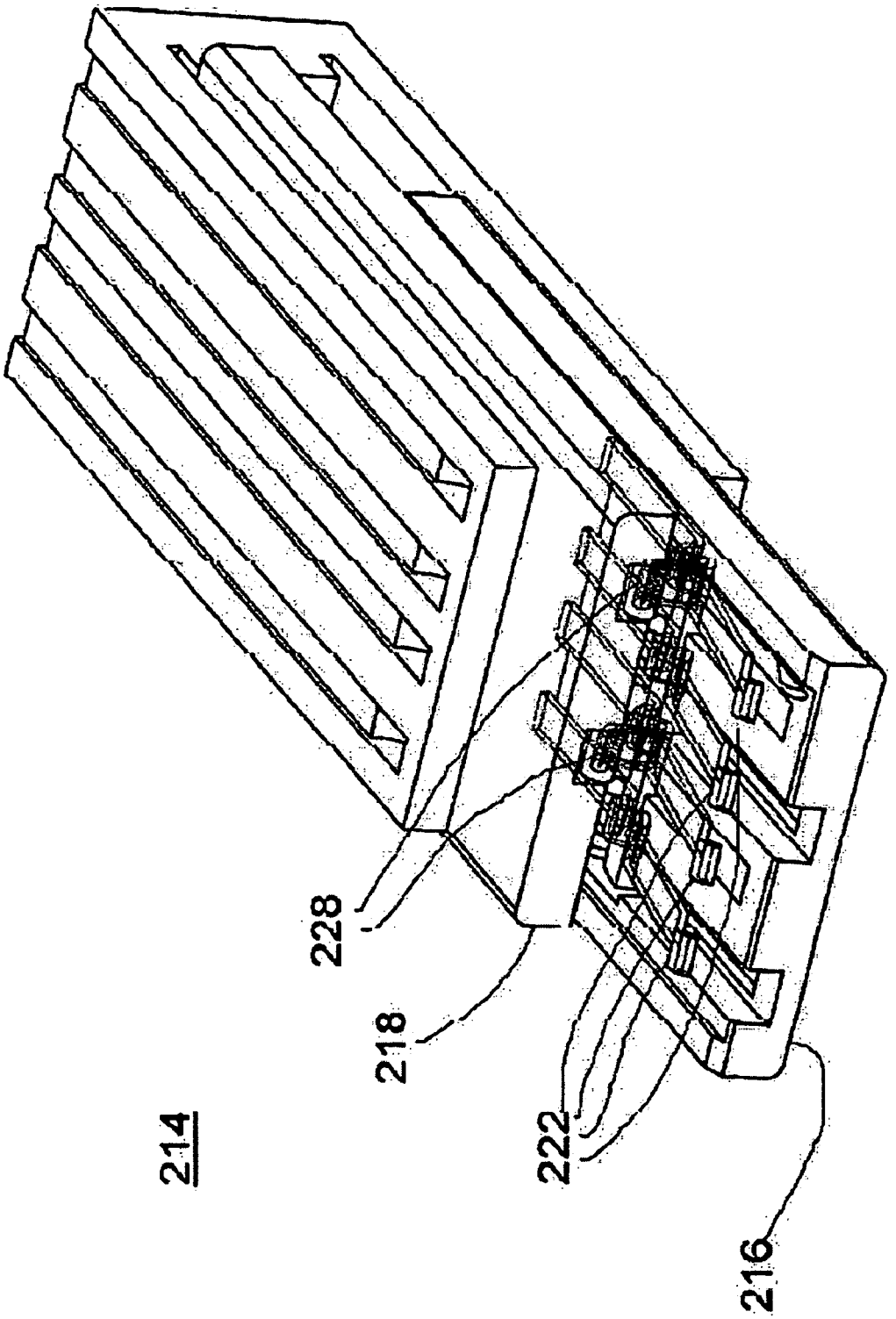

Fig. 8g

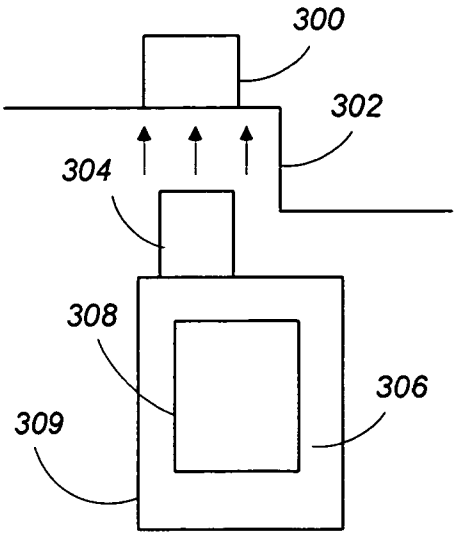

FIG. 9A

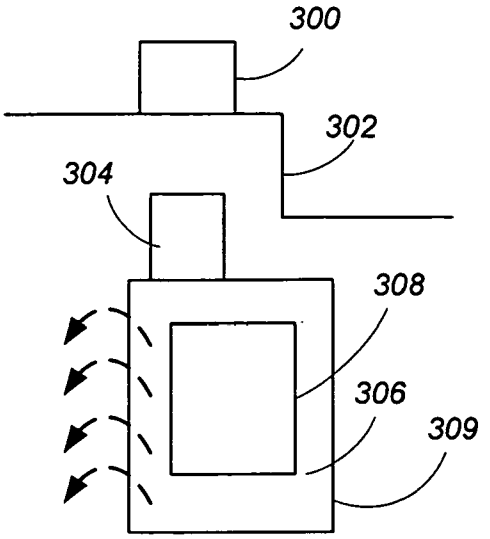

FIG. 9B

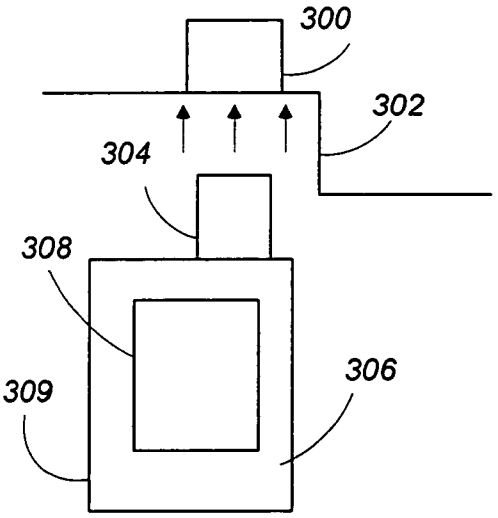

FIG. 9C

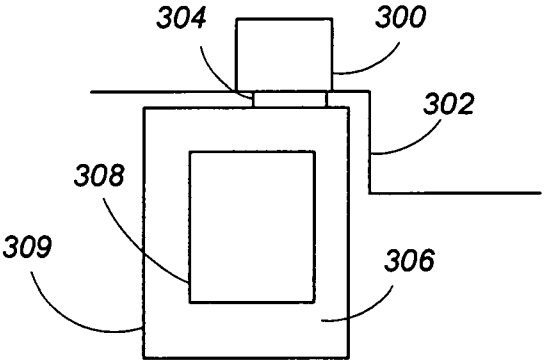

FIG. 9D

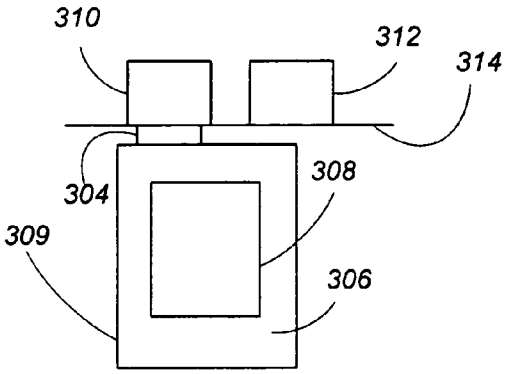

FIG. 9E

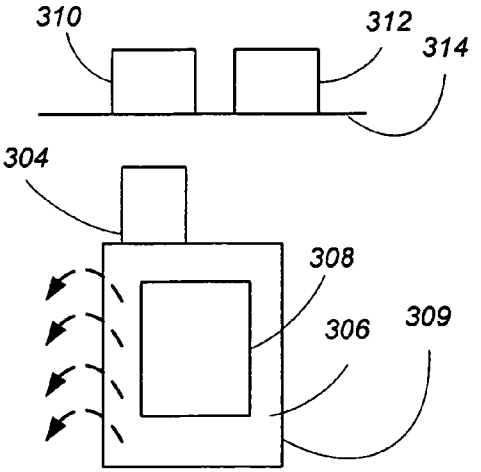

FIG. 9F

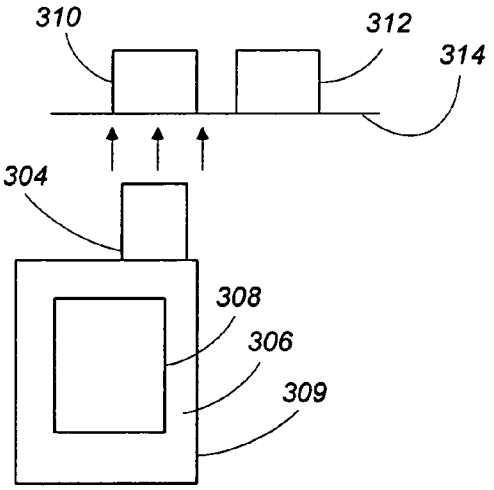

FIG. 9G

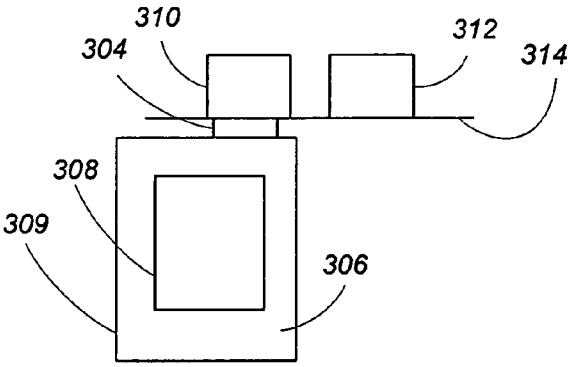

FIG. 9H

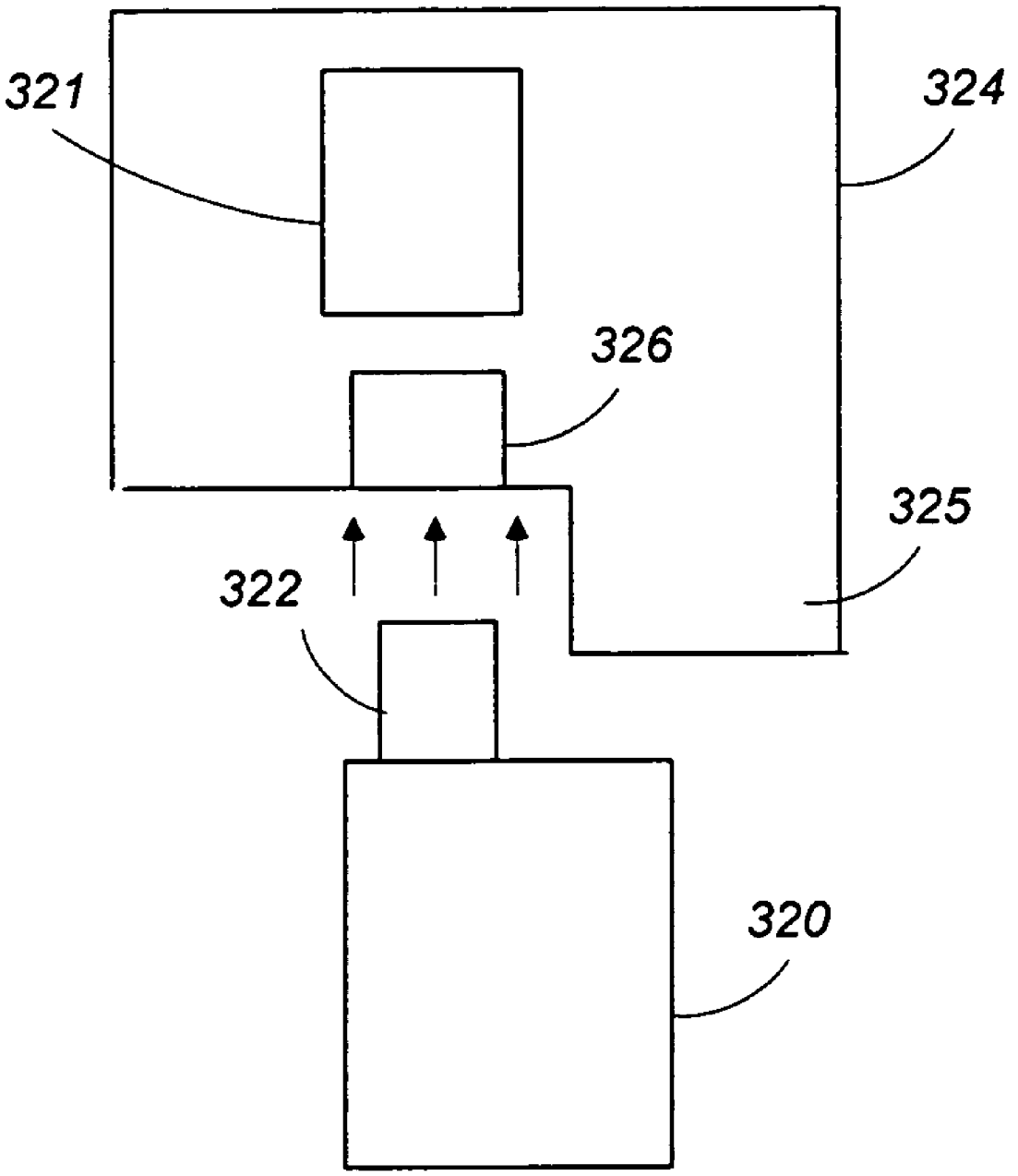

FIG. 10

REVERSIBLE UNIVERSAL SERIAL BUS (USB) DEVICE AND CONNECTOR

This application claims the benefit of U.S. Provisional Patent Application No. 60/592,517 filed Aug. 2, 2004.

FIELD AND BACKGROUND OF THE INVENTION

The present invention relates to Universal Serial Bus (USB) devices, and, in particular, it concerns USB devices for reversible coupling with USB hosts. The invention further relates to reversible USB connectors.

By way of introduction, a standard USB plug can only be inserted into a standard USB receptacle in one of two possible orientations. Therefore, if the USB plug is orientated incorrectly in relation to the USB receptacle, the plug and receptacle cannot be coupled. As there is no standard for the positioning of a USB receptacle on a device, the user will often attempt to insert the plug into a receptacle in an incorrect orientation. In a situation in which a USB plug is frequently inserted and removed from a USB receptacle, such errors may become a significant inconvenience for the user. Also, many USB devices have a USB plug which extends directly from the body of the USB device. When such a USB device is connected to a USB receptacle of a host appliance that has another port, the USB device frequently blocks access to the other port of the host and prevents other USB devices from being connected to the host appliance. Where the body of the USB device is asymmetric, i.e., the USB plug is positioned asymmetrically in relation to the sides of the USB device, insertion in a first orientation may block the neighboring port, whereas if it were possible to insert the device in an inverted orientation the insertion would not block the neighboring port. Also, in the case of a USB device that has an asymmetric body, insertion in a first orientation may not be possible due to the combined structure of the device and the host appliance, whereas if it were possible to insert the device in a different orientation the insertion could become possible.

Of relevance to the present invention is U.S. Pat. No. 6,394,813 to Stout, et al. Stout, et al. teaches a USB connector adapter connected to a peripheral device. The adapter is adjustable so as to allow selective reorientation of the peripheral device with respect to a host device. A shortcoming of the aforementioned system is due the need of ensuring that the adapter is always inserted into the USB connector of the host device in the same orientation.

Also of relevance to the present invention is U.S. Pat. No. 6,733,329 to Yang. Yang teaches a interchangeable USB adapter connected to a peripheral device. The USB adapter is configured for being interchangeable between an A-type USB connector, a B-type USB connector and a mini type USB connector. A shortcoming of the aforementioned system is due the need of ensuring that the adapter is always inserted into the USB connector of the host device in the same orientation. A further shortcoming of the aforementioned system is that the peripheral device has to have the same orientation with respect to the host device when connected therewith.

Also of relevance to the present invention is U.S. Publication No. 2003/0171035 to Yoo. Yoo teaches a USB peripheral device having a printed circuit board having electrical terminals on both sides of the printed circuit board. Yoo also teaches an adapter having a standard USB plug at one end and a slit at the other end having terminals thereon. The USB peripheral device is then connected to the adapter by inserting the printed circuit board into the slit of the adapter. The printed circuit board can be inserting into the slit in two orientations. A shortcoming of the aforementioned system is due the need of ensuring that the adapter is always inserted into the USB connector of the host device in the same orientation. An additional shortcoming of the aforementioned system is that the system is not convenient to use. A further shortcoming of the aforementioned system is that the printed circuit board needs to be specially designed to incorporate the reversibility feature.

There is therefore a need for a reliable, easy-to-use and reversible USB plug that can be connected to a standard USB receptacle in two orientations without having to adjust the plug prior to, during or after connection. Additionally, there is a need for a reliable, easy-to-use and reversible USB receptacle that can be connected to a standard USB plug in two orientations without having to adjust the plug prior to, during or after connection. Furthermore, there is a need for a reversible device for connecting in two orientations to an appliance which includes a standard USB receptacle without having to adjust the device prior to, during or after connection.

SUMMARY OF THE INVENTION

The present invention is a reversible USB device and a corresponding connector construction.

According to the teachings of the present invention there is provided, reversible connector for coupling with a USB A-type standard connector, the standard connector having a hollow section, a fixed set of four electrical contacts disposed on one side of the hollow section and an electrically conducting shield disposed on three sides of the hollow section, the reversible connector comprising a first set of four electrical contact regions and a second set of four electrical contact regions, the first and second sets configured such that: (a) in a first coupling orientation of the reversible connector with the standard connector, the first set of electrical contact regions is mechanically connected with the set of electrical contacts of the standard connector and the second set is mechanically disconnected from the set of electrical contacts of the standard connector; and (b) in a second coupling orientation of the reversible connector with the standard connector, the second set of electrical contact regions is mechanically connected with the set of electrical contacts of the standard connector and the first set is mechanically disconnected from the set of electrical contacts of the standard connector.

According to a further feature of the present invention, there is also provided a printed circuit board interface connector arrangement having four terminals disposed thereon, each of the four terminals being configured for connection to a printed circuit board, the printed circuit board connector arrangement connected to an electronic switching arrangement for electrically connecting electrically corresponding contact regions of the first set of electrical contact regions and the second set of electrical contact regions to the terminals.

According to a further feature of the present invention, there is also provided a printed circuit board interface connector arrangement having four terminals disposed thereon, each of the four terminals being configured for connection to a printed circuit board, the printed circuit board connector arrangement having a crossover arrangement for electrically connecting electrically corresponding

contact regions of the first set of electrical contact regions and the second set of electrical contact regions to the terminals.

According to a further feature of the present invention, the first and second contact regions disposed on a tongue arrangement including: (a) a first major side having the first set of four electrical contact regions; and (b) a second major side having the second set of four electrical contact regions.

According to a further feature of the present invention, the tongue arrangement includes a central insulating layer electrically isolating the first set of electrical contact regions from the second set of electrical contact regions.

According to a further feature of the present invention, the central insulating layer includes a plurality of grooves, the first set of electrical contact regions and the second set of electrical contact regions being recessed in the grooves.

According to a further feature of the present invention, the central insulating layer is substantially rigid.

According to a further feature of the present invention, the tongue arrangement includes a plurality of projections thereon configured for centering the tongue arrangement within the hollow section of the standard connector.

According to a further feature of the present invention, the tongue arrangement includes a plurality of projections thereon configured for reducing lateral movement of the tongue arrangement within the hollow of the standard connector.

According to a further feature of the present invention, the tongue arrangement includes a plurality of projections, one of the projections being disposed on the first major side and another of the projections being disposed on the second major side, the projections being configured for preventing at least one of the first set of electrical contact regions and the second set of electrical contact regions from making electrical contact with the shield of the standard connector.

According to a further feature of the present invention, there is also provided a contact raising arrangement configured for: (a) deflecting the first set of contact regions in the first coupling orientation so that the first set of contact regions makes mechanical contact with the set of electrical contacts of the standard connector; and (b) deflecting the second set of contact regions in the second coupling orientation so that the second set of contact regions makes mechanical contact with the set of electrical contacts of the standard connector.

According to a further feature of the present invention, the tongue arrangement includes a central insulating layer electrically isolating the first set of electrical contact regions from the second set of electrical contact regions.

According to a further feature of the present invention, the central insulating layer includes a plurality of grooves, the first set of electrical contact regions and the second set of electrical contact regions being recessed in the grooves.

According to a further feature of the present invention, the central insulating layer is substantially rigid.

According to a further feature of the present invention, there is also provided a sleeve, the tongue arrangement being centrally disposed in the sleeve, the tongue arrangement including a bendable portion, the tongue arrangement being configured such that, as the tongue arrangement and the standard connector are brought together in: (a) the first coupling orientation, the tongue arrangement is moved in a first direction by the standard connector so that only the first set of electrical contact regions makes mechanical contact with the set of electrical contacts of the standard connector; and (b) the second coupling orientation, the tongue arrangement is moved in a second direction by the standard connector so that only the second set of electrical contact regions is in mechanical contact with the set of electrical contacts of the standard connector.

According to a further feature of the present invention, there is also provided a contact raising arrangement configured for: (a) deflecting the first set of contact regions in the first coupling orientation so that the first set of contact regions makes mechanical contact with the set of electrical contacts of the standard connector; and (b) deflecting the second set of contact regions in the second coupling orientation so that the second set of contact regions makes mechanical contact with the set of electrical contacts of the standard connector.

According to a further feature of the present invention, the tongue arrangement includes a central insulating layer electrically isolating the first set of electrical contact regions from the second set of electrical contact regions.

According to a further feature of the present invention, the central insulating layer includes a plurality of grooves, the first set of electrical contact regions and the second set of electrical contact regions being recessed in the grooves.

According to a further feature of the present invention, there is also provided a centering mechanism configured for maintaining the tongue arrangement centrally within the sleeve prior to the tongue arrangement and the standard connector making contact.

According to a further feature of the present invention, the centering mechanism is further configured such that, initial contact of the centering mechanism with the standard connector releases the centering mechanism thereby allowing movement of the tongue arrangement.

According to a further feature of the present invention, the centering mechanism includes a spring recoiled sliding locking mechanism.

According to a further feature of the present invention, the tongue arrangement includes a set of metallic strips including at least four metallic strips, the first and the second sets of contact regions being provided by regions of the metallic strips, wherein the set of metallic strips form a primary structural element of the tongue arrangement.

According to a further feature of the present invention, the set of metallic strips functions as a leaf spring such that the bendable portion includes a majority of the tongue arrangement.

According to a further feature of the present invention, the set of metallic strips includes at least a first group of four metallic strips providing the first set of electrical contact regions and a second group of four metallic strips providing the set of second electrical contact regions, the first group of metallic strips being electrically insulated from the second group of metallic strips.

According to a further feature of the present invention, there is also provided a printed circuit board interface connector arrangement having four terminals disposed thereon, each of the four terminals being configured for connection to a printed circuit board, the printed circuit board connector arrangement having a crossover arrangement for electrically connecting electrically corresponding contact regions of the first set of electrical contact regions and the second set of electrical contact regions to the terminals.

According to a further feature of the present invention, there is also provided an electronic switching arrangement configured for routing electrical signals from the leaf spring electrical contact arrangement according to the coupling orientation of the tongue arrangement with the standard connector.

According to a further feature of the present invention, the tongue arrangement has a tip the tongue arrangement including an insulated cap disposed at the tip, the insulated cap being configured for preventing electrical contact between the leaf spring electrical contact arrangement and the sleeve.

According to a further feature of the present invention, there is also provided a tongue actuator configured to point the tongue arrangement toward the set of contacts of the standard connector as the tongue arrangement is being coupled with the hollow section of the standard connector.

According to a further feature of the present invention, the tongue arrangement has a tip, the tongue arrangement including an insulated cap disposed at the tip, the tongue arrangement being configured for: (a) preventing electrical contact between the leaf spring electrical contact arrangement and the shield of the standard connector as the tongue arrangement is being coupled with the hollow section; and (b) making electrical contact between the leaf spring electrical contact arrangement and the set of contacts of the standard connector when the tongue arrangement is coupled with the hollow section.

According to a further feature of the present invention, there is also provided: (a) a sleeve; and (b) a pair of blocks slidably mounted adjacent to each other in the sleeve, the blocks configured for independently sliding between an operative position and a retracted position, the blocks also including a first block and a second block, the first block having the first set of four electrical contacts disposed thereon, the second block having the second set of four electrical contacts disposed thereon.

According to a further feature of the present invention, there is also provided a restoring arrangement configured for restoring the blocks to the operative position.

According to a further feature of the present invention, the restoring arrangement includes two helical springs, the blocks having a width and a thickness, each of the helical springs having an outside diameter greater than the thickness.

According to a further feature of the present invention, each of the blocks include a plurality of grooves, the first set of electrical contacts and the second set of electrical contacts being recessed in the grooves.

According to a further feature of the present invention, there is also provided a housing having a set of electrical terminals disposed therein, the set of electrical terminals and the first set of electrical contacts being configured such that: (a) the set of electrical terminals makes electrical contact with the first set of electrical contacts when the first block is in the operative position; and (b) the set of electrical terminals is electrically isolated from the first set of electrical contacts when the first block is in the retracted position.

According to a further feature of the present invention, there is also provided a contact raising arrangement configured for: (a) raising the first set of contact regions away from the first block in the first coupling orientation, so that the first set of contact regions makes mechanical contact with the set of electrical contacts of the standard connector; and (b) raising the second set of contact regions away from the second block in the second coupling orientation, so that the second set of contact regions makes mechanical contact with the set of electrical contacts of the standard connector.

According to a further feature of the present invention, there is also provided a first lever arrangement and a second lever arrangement, the first lever arrangement being mechanically connected to the first set of contacts, the second lever arrangement being mechanically connected to the second set of contacts, the first lever arrangement and the second lever arrangement being configured to raise the first set of contacts and the second set of contacts, respectively, in response to actuation by the standard connector.

According to a further feature of the present invention, the first block has at least one groove therein configured to accommodate at least part of the first lever arrangement during relative movement of the first block and the second block, and wherein the second block has at least one groove therein configured to accommodate at least part of the second lever arrangement during relative movement of the first block and the second block.

There is also provided according to the teachings of the present invention, a reversible USB device, for coupling with a USB appliance in two coupling orientations, the USB device comprising: (a) a functional unit configured to perform a function; (b) a body constructed for gripping; and (c) a reversible USB plug protruding from the body for coupling with the USB A-type standard receptacle of the USB appliance, the standard receptacle having a fixed set of four electrical contacts, the reversible plug comprising a first set of four electrical contact regions and a second set of four electrical contact regions, the first and second sets configured such that: (i) in a first coupling orientation of the reversible plug with the standard receptacle, the first set of electrical contact regions is mechanically connected with the set of electrical contacts of the standard receptacle and the second set is mechanically disconnected from the set of electrical contacts of the standard receptacle; (ii) in a second coupling orientation of the reversible plug with the standard receptacle, the second set of electrical contact regions is mechanically connected with the set of electrical contacts of the standard receptacle and the first set is mechanically disconnected from the set of electrical contacts of the standard receptacle.

BRIEF DESCRIPTION OF THE DRAWINGS

The invention is herein described, by way of example only, with reference to the accompanying drawings, wherein:

FIG. **1***a* is an isometric view of a reversible plug that is constructed and operable in accordance with a preferred embodiment of the present invention;

FIG. **1***b* is a plan view of the plug of FIG. **1***a;*

FIG. **1***c* is a sectional view through the line C—C of FIG. **1***b;*

FIG. **1***d* is an exploded isometric view of the plug of FIG. **1***a;*

FIG. **1***e* is an isometric view of the plug of FIG. **1***a* (having its outer housing removed for clarity) making contact with an A-type USB standard receptacle (also having its outer housing removed for clarity);

FIG. **1***f* is a schematic semi-transparent side view of the plug and receptacle of FIG. **1***e;*

FIG. **2***a* is an isometric view of a reversible plug that is constructed and operable in accordance with a first alternate embodiment of the present invention;

FIG. **2***b* is a front view of the plug of FIG. **2***a;*

FIG. **2***c* is a sectional view through the line C—C of FIG. **2***b;*

FIG. **2***d* is a sectional view of the plug of FIG. **2***a* making contact with an A-type USB standard receptacle;

FIG. **2***e* is a sectional view of the plug and receptacle of FIG. **2***d* fully coupled;

FIG. **2***f* is an isometric view of the plug and receptacle of FIG. **2***e* fully coupled (having their outer housing removed for clarity);

FIG. **2***g* is a schematic view of an electronic switching arrangement for use with the plug of FIG. **2***a;*

FIG. **2***h* is a sectional view of a reversible plug, that is constructed and operable in accordance with a second alternate embodiment of the present invention, making contact with an A-type USB standard receptacle;

FIG. **2***i* is a sectional view of the plug and receptacle of FIG. **2***h* fully coupled;

FIG. **2***j* is an isometric view of the plug and receptacle of FIG. **2***h* fully coupled (having their outer housing removed for clarity);

FIG. **2***k* is a top view of a tongue arrangement of the plug of FIG. **2***h;*

FIG. **2***m* is an isometric view of the tongue arrangement of FIG. **2***k;*

FIG. **3***a* is an isometric view of a reversible plug that is constructed and operable in accordance with a third alternate embodiment of the present invention;

FIG. **3***b* is a plan view of the plug of FIG. **3***a;*

FIG. **3***c* is a sectional view through line C—C of FIG. **3***b;*

FIG. **3***d* is a sectional view through line D—D of FIG. **3***b;*

FIG. **3***e* is a plan view of the plug of FIG. **3***a* inserted into an A-type USB standard receptacle;

FIG. **3***f* is a sectional view through the line F—F of FIG. **3***e;*

FIG. **4***a* is an isometric view of a reversible plug that is constructed and operable in accordance with a fourth alternate embodiment of the present invention;

FIG. **4***b* is a plan view of the plug of FIG. **4***a;*

FIG. **4***c* is a sectional view through line C—C of FIG. **4***b;*

FIG. **4***d* is a sectional view through line D—D of FIG. **4***c;*

FIG. **4***e* is an exploded view of the plug of FIG. **4***a;*

FIG. **4***f* is a plan view of the plug of FIG. **4***a* inserted into an A-type USB standard receptacle;

FIG. **4***g* is a sectional view through line G—G of FIG. **4***f;*

FIG. **5***a* is an isometric view of a reversible receptacle that is constructed and operable in accordance with a preferred embodiment of the present invention;

FIG. **5***b* is an exploded isometric view of the receptacle of FIG. **5***a;*

FIG. **5***c* is a plan view of the receptacle of FIG. **5***a* making contact with an A-type USB standard plug;

FIG. **5***d* is a sectional view through line D—D of FIG. **5***c;*

FIG. **5***e* is a sectional view of the receptacle and plug of FIG. **5***c* fully coupled;

FIG. **6***a* is an isometric view of a reversible receptacle (without its accompanying circuit board) that is constructed and operable in accordance with a first alternate embodiment of the present invention;

FIG. **6***b* is plan view of the receptacle of FIG. **6***a* (with its accompanying circuit board);

FIG. **6***c* is an exploded isometric view of the receptacle of FIG. **6***c;*

FIG. **6***d* is a sectional of the receptacle of FIG. **6***b* through line D—D making contact with an A-type USB standard plug;

FIG. **6***e* is a sectional view of the plug and receptacle of FIG. **6***d*, fully coupled;

FIG. **6***f* is a sectional view of a reversible receptacle that is constructed and operable in accordance with a second alternate embodiment of the present invention;

FIG. **6***g* is an exploded isometric view of the receptacle of FIG. **6***f;*

FIG. **6***h* is a rear isometric view of a tongue arrangement of the receptacle of FIG. **6***f;*

FIG. **6***i* is a front isometric view of the tongue arrangement of FIG. **6***h;*

FIG. **7***a* is an isometric view of a reversible receptacle that is constructed and operable in accordance with a third alternate embodiment of the present invention;

FIG. **7***b* is a plan view of the receptacle of FIG. **7***a;*

FIG. **7***c* is a sectional view through line C—C of FIG. **7***b;*

FIG. **7***d* is a sectional view of the receptacle of FIG. **7***c* coupled with an A-type USB standard plug;

FIG. **8***a* is an isometric view of a reversible receptacle that is constructed and operable in accordance with a fourth alternate embodiment of the present invention;

FIG. **8***b* is an exploded isometric view of the receptacle of FIG. **8***a;*

FIG. **8***c* is an exploded isometric view of the lower block of the receptacle of FIG. **8***b;*

FIG. **8***d* is a plan view of the receptacle of FIG. **8***a* making contact with an A-type USB standard plug;

FIG. **8***e* is a sectional view through line E—E of FIG. **8***d,*

FIG. **8***f* is a sectional view of the receptacle and plug of FIG. **8***d*, fully coupled; and

FIG. **8***g* is an isometric view of the receptacle of FIG. **8***f* (having its shield removed for clarity) when fully coupled with the plug of FIG. **8***f*, the plug being removed for clarity;

FIGS. **9***a*–**9***h* are generic schematic representations of a reversible device that is constructed and operable in accordance with a preferred embodiment of the present invention;

FIG. **10** is a generic schematic representation of an appliance which incorporates a reversible receptacle that is constructed in accordance with a preferred embodiment of the current invention.

DESCRIPTION OF THE PREFERRED EMBODIMENTS

The present invention is a reversible USB connector construction and method of operation thereof.

The principles and operation of a reversible USB connector according to the present invention may be better understood with reference to the drawings and the accompanying description.

By way of introduction, the present invention teaches a reversible USB connector for connection with a standard A-type USB connector. The reversible connector is configured for engagement with the standard connector interchangeably in each of two orientations. Thus the reversible connector can mate with the standard connector in a first orientation, the connectors can be disconnected, one of the connectors can be rotated through 180 degrees and the connectors can then mate again without having to reconfigure or otherwise adjust the reversible connector. The term "connector" is defined herein to include both plugs and receptacles. An A-type USB standard connector is defined herein as a connector which conforms to USB standards without any modification to render it reversible. These standards are well defined in the art, and are standardized by the Universal Serial Bus Implementers Forum (USB-IF). This invention further teaches a reversible USB device. The phrase "USB device" is defined herein to include any device that is programmed or otherwise configured to perform a function and which includes a body attached to or integrally formed with a USB plug. The reversible USB devices of the present invention include a reversible USB plug such that the user can hold the body of the reversible device and engage it with a standard USB receptacle in either of two orientations. Finally, the invention further teaches a reversible USB appliance. The phrase "USB appliance" is defined herein to include any device that is programmed or otherwise configured to perform a function and which includes a

body attached to or integrally formed with a USB receptacle. The reversible USB appliances of the present invention include a reversible USB receptacle (socket) such that the user can hold a standard USB device and engage it with the reversible USB receptacle of the appliance in either of two orientations.

Before turning to the specific implementations of the invention illustrated in the drawings, it will be helpful to present a conceptual description of the invention common to all of the embodiments described below. Thus, in general terms, the present invention provides a reversible connector (plug or receptacle) for coupling with a USB A-type standard connector (receptacle or plug), the standard connector having a hollow section, a fixed set of four electrical contacts disposed on one side of the hollow section and an electrically conducting shield disposed on three sides of the hollow section. The reversible connector of the present invention includes a first set of four electrical contact regions and a second set of four electrical contact regions. The first and second sets of electrical contact regions are configured such that, in a first coupling orientation of the reversible connector with the standard connector, the first set of electrical contact regions is mechanically connected with the set of electrical contacts of the standard connector and the second set is mechanically disconnected from the set of electrical contacts of the standard connector. The sets of contacts are further configured such that, in an alternative second coupling orientation of the reversible connector with the standard connector, the second set of electrical contact regions is mechanically connected with the set of electrical contacts of the standard connector and the first set is mechanically disconnected from the set of electrical contacts of the standard connector.

There are many possible mechanical solutions for implementing the underlying reversible connector concept of the present invention, all of which fall within the general scope of the present invention. By way of non-limiting examples, the invention will be exemplified below with reference to a small number of specific preferred examples. In some of these examples, the two sets of contacts are deployed on opposing sides of a single interface element so that one set of contacts is correctly oriented independent of the orientation of the interface element. The interface element may be a movable or flexible tongue or may be a rigid block. In other exemplary implementations described below, each set of contacts is deployed on a separate block and the blocks are selectively retractable to allow the appropriately oriented block to form the required connections. These options will be described in detail below.

For each implementation, correct connection of each set of contacts with the associated electronics of a USB device or appliance may be achieved in any or a large number of ways which will be clear to one ordinarily skilled in the art. By way of non-limiting examples, reference will be made below to three particular preferred connectivity options as follows: in a first option, an electronic switching arrangement is used to automatically switch between connections between the two sets of contacts; alternatively, a crossover arrangement of electrical contacts is used to connect both sets of contacts to a PCB in parallel; finally, a further option employs a modified PCB with eight separate input contacts, wherein the required connections may be achieved internally with or without switching. These options will be illustrated below. It should be noted, however, that the different options are interchangeable between the various embodiments described.

Ten embodiments of a reversible connector are described below. The first five embodiments, described with reference to FIGS. **1***a* to **4***g*, describe a reversible plug for connection to an A-type USB standard receptacle. The final five embodiments, described with reference to FIGS. **5***a* to **8***g*, describe a reversible receptacle for connection to an A-type USB standard plug. The overall resulting functionality of a reversible USB device, generic to the plug embodiments of FIGS. **1***a*–**4***g*, is described with reference to FIGS. **9***a*–**9***h*. Finally, an appliance containing a USB reversible receptacle, generic to the receptacle embodiments of FIGS. **5***a*–**8***g*, is described with reference to FIG. **10**.

It should be noted that, while the present description and the attached claims refer specifically to a reversible connector for connection to an A-type USB standard connector, this terminology should be interpreted by equivalents to encompass other existing or future connectors, having different standards but similar design considerations, for connecting two devices.

Reference is now made to FIGS. **1***a*–*d*. FIG. **1***a* is an isometric view of a reversible plug **10** that is constructed and operable in accordance with a preferred embodiment of the present invention. FIG. **1***b* is a plan view of reversible plug **10** of FIG. **1***a*. FIG. **1***c* is a sectional view through the line C—C of FIG. **1***b*. FIG. **1***d* is an exploded isometric view of reversible plug **10** of FIG. **1***a*. Reversible plug **10** has a sleeve **14**, a tongue arrangement **16** and a centering mechanism **18**. The phrase "tongue arrangement" as used herein in the description and claims refers to a generally flat arrangement (i.e., having two dimensions, "length" and "width", significantly greater than a third "thickness" dimension) which is movable, at least under certain conditions, in a direction generally parallel to its thickness dimension, i.e., roughly perpendicular to its two larger dimensions. The dimensions referred to are the outer dimensions of the arrangement which may itself be an open structure with internal spaces as illustrated below in FIGS. **2***a*–**2***f*, **2***h*–**2***m* and **6***a*–**6***i*, or a solid structure as illustrated here in FIGS. **1***a*–**1***d* and below in FIGS. **5***a*–**5***e*. The movement of the tongue arrangement or part thereof may be a roughly parallel motion, or may be a flexing motion achieved through the flexibility of the tongue arrangement itself or a pivotal movement about an effective pivot axis.

Sleeve **14** is an electrically conducting shield configured to mate with the standard shielding configuration of a USB receptacle, and thus has four generally rectangular sides. Tongue arrangement **16** is initially centrally disposed in sleeve **14**. Tongue arrangement **16** includes a central insulating layer **20**. Central insulating layer **20** has an upper major side **22** and a lower major side **24**. It should be noted that, as reversible plug **10** is reversible, upper major side **22** may become the lower major side and lower major side **24** may become the upper major side. Nevertheless, the non-limiting terminology of "upper" and "lower" has been adopted for clarity of presentation in order to explain the present invention with reference to the drawings. Upper major side **22** has four grooves **26** therein. Similarly, lower major side **24** has four grooves (not shown) therein. Reversible plug **10** includes an upper set of electrical contact regions **28** recessed in grooves **26** of upper major side **22**. Similarly, reversible plug **10** includes a lower set of electrical contact regions **30** recessed in the grooves of lower major side **24**. Electrical contact regions **28** are electrically isolated from electrical contact regions **30** by central insulating layer **20**. Tongue arrangement **16** includes a bendable portion **32**. Bendable portion **32** enables tongue arrangement **16** to move up or down when coupled with a USB recep-

tacle, as will be described below with reference to FIGS. **1***e* and **1***f*. Bendable portion **32** is typically a flexible element. However, it will be appreciated by those ordinarily skilled in the art that bendable portion **32** can also be a hinge or similar member.

Tongue arrangement **16** is preferably formed so as to center by itself elastically when not coupled with a USB receptacle. Nevertheless in order to ensure that tongue arrangement **16** is always centered within sleeve **14** prior to insertion into a USB receptacle, reversible plug **10** preferably also includes a centering mechanism **18** configured for maintaining tongue arrangement **16** centrally within sleeve **14**. Centering mechanism **18** will be described in more detail with reference to FIGS. **1***e* and **1***f*.

Reference is also made to FIGS. **1***e* and **1***f*. FIG. **1***e* is an isometric view of reversible plug **10** of FIG. **1***a* (having sleeve **14** removed for clarity) making contact with an A-type USB standard receptacle **34** (also having its outer housing removed for clarity). FIG. **1***f* is a schematic semi-transparent side view of reversible plug **10** and A-type USB standard receptacle **34** of FIG. **1***e*. A-type USB standard receptacle **34** has a shield **52** (FIG. **1***f*) which surrounds a hollow section **48** on three sides. A set of four electrical contacts **50** is disposed on an insulating block **54** on one side of hollow section **48**. Electrical contacts **50** have projecting portions **51** which make electrical contact with either electrical contact regions **28** or electrical contact regions **30** of reversible plug **10**, as described below. Shield **52**, which is an electrically conducting shield, is disposed on the other three sides of hollow section **48**. Shield **52** has four sides so that hollow section **48** and insulating block **54** are surrounded by shield **52**. There is a gap between insulating block **54** and shield **52** so that sleeve **14** of reversible plug **10** is inserted between this gap when reversible plug **10** is coupled with A-type USB standard receptacle **34**. Insulating block **54** has a curved upper edge **56** at the entrance to A-type USB standard receptacle **34**.

Centering mechanism **18** includes two elongated side panels **36**. Each panel **36** has, at one end, a V-shaped notch **38** cut therein. The other end of each panel **36** is connected to a connecting member **40**. Panels **36** are connected to connecting member **40**, such that panels **36** are parallel to each other and the space between panels **36** accommodates tongue arrangement **16**. Centering mechanism **18** is typically formed as a unitary molded plastic element. Tongue arrangement **16** has a tip **42**. Tip **42** includes a protrusion **44** disposed on either side of tip **42** for engaging with V-shaped notches **38** of centering mechanism **18**. Centering mechanism **18** is retractable and is normally biased by an extension spring **46** to a forward position as shown in FIG. **1***e* in which engagement of protrusions **44** with V-shaped notches **38** prevents centers and prevents up-down movement of tongue arrangement **16**. Therefore, centering mechanism **18** is a spring recoiled sliding locking mechanism. In this way, when reversible plug **10** is not connected to A-type USB standard receptacle **34**, tongue arrangement **16** is centered by means of centering mechanism **18**.

Initial contact of panels **36** of centering mechanism **18** with insulating block **54** of A-type USB standard receptacle **34** pushes panels **36** backward. This action releases protrusion **44** of tongue arrangement **16** from V-shaped notch **38** of centering mechanism **18** thereby allowing up and down movement of tongue arrangement **16**.

As reversible plug **10** is inserted into A-type USB standard receptacle **34**, tip **42** makes contact with curved upper edge **56** of insulating block **54**. Curved upper-edge **56** pushes tip **42** and therefore tongue arrangement **16** upward. Reversible plug **10** is inserted fully into hollow section **48**. At this point, only electrical contact regions **30** of lower major side **24** of tongue arrangement **16** make mechanical contact with electrical contacts **50** of A-type USB standard receptacle **34**. The term "only electrical contact regions **30**" is defined herein to exclude electrical contact regions **28**. As electrical contact regions **28** of upper major side **22** are recessed in central insulating layer **20**, electrical contact regions **28** are electrically isolated from sleeve **14**. This is important to prevent shorting of electrical contact regions **28** with sleeve **14**. The above paragraph describes one coupling orientation of reversible plug **10** with A-type USB standard receptacle **34**.

A second coupling orientation is described below. In order to describe this coupling orientation, it is more convenient to consider a rotation of A-type USB standard receptacle **34** by 180 degrees so that insulating block **54** is above hollow section **48** rather than rotating reversible plug **10**. As reversible plug **10** is inserted into A-type USB standard receptacle **34**, tongue arrangement **16** is moved down. When reversible plug **10** is fully inserted, only electrical contact regions **28** of upper major side **22** of tongue arrangement **16** make mechanical contact with electrical contacts **50** of A-type USB standard receptacle **34**. The term "only electrical contact regions **28**" is defined herein to exclude electrical contact regions **30**. Similarly, in this second coupling orientation, electrical contact regions **30** of lower major side **24** are electrically isolated from sleeve **14**. This implementation shows eight output connectors which may be connected directly to a suitably adapted printed circuit board, as will be clear to one ordinarily skilled in the art. As mentioned earlier, this connectivity solution is interchangeable with the alternative solutions of electronic switching and cross-over connection which will be described below.

Reference is now made to FIGS. **2***a–c*. FIG. **2***a* is an isometric view of a reversible plug **58** that is constructed and operable in accordance with a first alternate embodiment of the present invention. FIG. **2***b* is a front view of reversible plug **58** of FIG. **2***a*. FIG. **2***c* is a sectional view through the line C—C of FIG. **2***b*. Reversible plug **58** is substantially the same as reversible plug **10** except for the differences described below and shown in FIGS. **2***a* to **2***f*. Reversible plug **58** has a tongue arrangement **66** formed from a first set of four electrical contact regions **60** and a second set of four electrical contact regions **62**. Tongue arrangement **66** is particularly distinguished from that of FIGS. **1***a*–**1***f* in that the metallic strips which provide electrical contact regions **60** and **62** themselves make up a primary structural element of the tongue arrangement. The term "primary structural element" is used herein to refer to an element or set of elements without which the structure described would not be self-supporting. The resulting structure is effectively a leaf spring electrical contact arrangement **64**. In other words, the primary structure of the tongue arrangement is resiliently flexible along most or all of its length such that the required up-down flexing of the tongue occurs by flexing of the entire structure without requiring a localized flexible region like the previous embodiment. Tongue arrangement **66** is initially centrally disposed in an electrically conducting sleeve **72** and preferably returns elastically to that central position. Electrical contact regions **60** and electrical contact regions **62** are typically from four metal strips which are bent to form leaf spring electrical contact arrangement **64**. However, it will be appreciated by those ordinarily skilled in the art that leaf spring electrical contact arrangement **64** can be formed from eight or more metal strips which are then joined together to form leaf spring electrical contact arrangement

64. There is no central insulating layer in this embodiment. The individual leaf spring electrical contacts are connected at their tips via an insulated cap **68**.

Reference is now made to FIG. **2***d*, which is a sectional view of reversible plug **58** of FIG. **2***a* making contact with A-type USB standard receptacle **34**. Insulated cap **68** has a pointed end so that tongue arrangement **66** is pushed up or down (depending on the coupling orientation of reversible plug **58** and A-type USB standard receptacle **34**) when inserted into A-type USB standard receptacle **34** via curved upper edge **56** of insulating block **54** of A-type USB standard receptacle **34**. In the example of FIG. **2***d*, tongue arrangement **66** will be pushed up when inserted into hollow section **48** of A-type USB standard receptacle **34**.

Reference is now made to FIG. **2***e*, which is a sectional view of reversible plug **58** and A-type USB standard receptacle **34**, fully coupled. Insulated cap **68** is configured for preventing electrical contact between leaf spring electrical contact arrangement **64** and sleeve **72** in both coupling orientations of reversible plug **58** with A-type USB standard receptacle **34**. Additionally, insulated cap **68** and leaf spring electrical contact arrangement **64** are configured such that leaf spring electrical contact arrangement **64** makes electrical contact with projecting portions **51** of electrical contacts **50** of A-type USB standard receptacle **34** in both coupling orientations of reversible plug **58**. Therefore, each contact of leaf spring electrical contact arrangement **64** forms a diamond shape at the tip of tongue arrangement **66**. The half of the diamond shape closest to the tip of tongue arrangement **66** is covered by insulated cap **68**. The other half of the diamond shape is not insulated so that this portion of the diamond makes electrical contact with projecting portions **51** of electrical contacts **50**. The diamond shape is configured so that it makes maximum contact with projecting portions **51**.

Reference is now made to FIG. **2***f*, which is an isometric view of reversible plug **58** and A-type USB standard receptacle **34** of FIG. **2***e* fully coupled (having their outer housings removed for clarity). As each of electrical contact regions **60** is electrically connected with a corresponding electrical contact region **62**, electrical signals from leaf spring electrical contact arrangement **64** need to be routed according to the coupling orientation of reversible plug **58** with A-type USB standard receptacle **34**. Therefore, reversible plug **58** includes an electronic switching arrangement **70** configured for routing electrical signals from leaf spring electrical contact arrangement **64** according to the coupling orientation of tongue arrangement **66** with A-type USB standard receptacle **34**. It will be appreciated by those ordinarily skilled in the art how to design and produce a suitable device for performing the function of electronic switching arrangement **70**. A preferred example of electronic switching arrangement **70** is described below.

Reference is now made to FIG. **2***g*, which is a schematic view of electronic switching arrangement **70** for use with plug **58** of FIG. **2***a*. Reversible plug **58** has two power pins and two data pins. Electronic switching arrangement **70** includes a power detection circuit **61**, a power inversion arrangement **63** and a data inversion arrangement **65**. One of the power pin outputs of reversible plug **58** is inputted into power detection circuit **61**. Power detection circuits **61** can be electrically connected to either output pin of reversible plug **58**. The output of power detection circuit **61** is fed into data inversion arrangement **65**. Additionally, the output of the data pins of reversible plug **58** is fed into data inversion arrangement **65**. Data inversion arrangement **65** is configured for routing the output of the data pins in accordance with the output of power detection circuit **61**, thereby inverting the output if necessary. Data inversion arrangement **65** is typically an analog switch, compliant with USB 2.0, for example, but not limited to ADG 3257. Power inversion arrangement **63** inverts the power output if necessary. Power inversion arrangement **63** is typically a Darlington Bridge diode circuit.

Reference is now made to FIGS. **2***h* to **2***k*. FIG. **2***h* is a sectional view of a reversible plug **240**, that is constructed and operable in accordance with a second alternate embodiment of the present invention, making contact with an A-type USB standard receptacle **242**. FIG. **2***i* is a sectional view of reversible plug **240** and A-type USB standard receptacle **242** of FIG. **2***h* fully coupled. FIG. **2***j* is an isometric view of reversible plug **240** and A-type USB standard receptacle **242** of FIG. **2***h* fully coupled (having their outer housing removed for clarity). FIG. **2***k* is a top view of tongue arrangement **252** of reversible plug **240** of FIG. **2***h*. FIG. **2***m* is an isometric view of tongue arrangement **252** of FIG. **2***k*. Reversible plug **240** is substantially the same as reversible plug **58** of FIGS. **2***a* to **2***g* except for the differences described below and shown in FIGS. **2***h* to **2***m*. Reversible plug **240** includes a tongue arrangement **252** having an insulating layer **244** disposed between a set of electrical contact regions **246** and a set of electrical contact regions **248**. Set of electrical contact regions **246** and set of electrical contact regions **248** are formed as a leaf spring electrical contact arrangement **250**. Set of electrical contact regions **246** and set of electrical contact regions **248** are not electrically connected at a tip **254** of tongue arrangement **252**. As with reversible plug **58**, the primary structural element of tongue arrangement **252** of reversible plug **240** is the set of metallic strips which also function as a leaf spring electrical contact arrangement **250**. Insulating layer **244** is primarily for electrically isolating set of electrical contact regions **246** and set of electrical contact regions **248** over the flexible portion of tongue arrangement **252**. Reversible plug **240** also includes a printed circuit board interface connector arrangement **256** having four terminals **258** disposed thereon. Each terminal **258** is configured for connection to a printed circuit board **260**. Printed circuit board interface connector arrangement **256** has a crossover arrangement **262** for electrically connecting electrically corresponding contact regions of set of electrical contact regions **246** and set of electrical contact regions **248** to terminals **258**. The term "electrically corresponding contact region" is defined herein as contact regions of reversible plug **240** which make electrical contact with the same electrical contact of A-type USB standard receptacle **242**. Therefore, in whichever coupling orientation reversible plug **240** is inserted into A-type USB standard receptacle **242**, the same terminals of A-type USB standard receptacle **242** are in electrical contact with the same terminals **258** of printed circuit board interface connector arrangement **256**. Therefore, electronic switching arrangement **70** is not needed in this embodiment. It should be noted that the arrangement of terminals **258** differs from the standard USB pin arrangement for connection to a printed circuit board. The arrangement shown in FIGS. **2***h* to **2***m* has been chosen in order to simplify the figures. However, it will be appreciated by those ordinarily skilled in the art that terminals **258** can be arranged in accordance with a standard USB pin arrangement for connection to a printed circuit board.

Reference is now made to FIGS. **3***a*–*d*. FIG. **3***a* is an isometric view of a reversible plug **74** that is constructed and operable in accordance with a third alternate embodiment of the present invention. FIG. **3***b* is a plan view of reversible

plug **74** of FIG. **3***a*. FIG. **3***c* is a sectional view through line C—C of FIG. **3***b*. FIG. **3***d* is a sectional view through line D—D of FIG. **3***b*. Reversible plug **74** includes an interface element **73** similar to the tongue arrangement of the first three embodiments. Unlike the first three embodiments, reversible plug **74** does not in this case have a shield or sleeve which surrounds interface element **73**. As a result of the absence of an outer sleeve, interface element **73** may be rigidly mounted without freedom of up-down movement relative to a device to which it is attached. Instead, the interface element centers itself within the socket together with the entire device during insertion. Interface element **73** as illustrated here includes a central insulting layer **75** having an upper major surface **76** and a lower major surface **78**. Central insulting layer **75** is substantially rigid. The term "substantially rigid" as used herein implies that the major structural element of the central insulating layer is relatively rigid. It should be noted however that the element may additionally include minor surface features and projections disposed on central insulting layer **75**, some of which may be flexible, as will be described below. Upper major surface **76** includes four grooves in which a set of four electrical contacts **80** is recessed. Lower major surface **78** includes four grooves in which a set of four electrical contacts **82** is recessed.

Reversible plug **74** includes a projection **84** disposed on either side of central insulting layer **75**. Reversible plug **74** also includes two projections **86** disposed on upper major surface **76** and lower major surface **78**. Projections **84**, **86** are configured for centering interface element **73** within hollow section **48** of A-type USB standard receptacle **34** as well as reducing lateral movement of interface element **73** within hollow section **48** of A-type USB standard receptacle **34**. Projections **84**, **86** are typically flexible projections which are formed integrally with central insulting layer **75**. Projections **86** additionally prevent electrical contacts **80** and electrical contacts **82** from making electrical contact with shield **52** of A-type USB standard receptacle **34**, as will be explained below with reference to FIG. **3***f*.

Reference is now FIGS. **3***e* and **3***f*. FIG. **3***e* is a plan view of reversible plug **74** of FIG. **3***a* inserted into A-type USB standard receptacle **34**. FIG. **3***f* is a sectional view through the line F—F of FIG. **3***e*. In the example of FIGS. **3***e* and **3***f*, reversible plug **74** is inserted into A-type USB standard receptacle **34** in a first coupling orientation. In this coupling orientation, electrical contacts **80** of upper major surface **76** are in electrical contact with electrical contacts **50** of A-type USB standard receptacle **34**. Projections **86** prevent electrical contacts **82** of lower major surface **78** coming into electrical contact with shield **52** of A-type USB standard receptacle **34**.

Similarly, if either reversible plug **74** or A-type USB standard receptacle **34** are turned over, electrical contacts **82** of lower major surface **78** make contact with electrical contacts **50** of A-type USB standard receptacle **34** when reversible plug **74** is coupled with A-type USB standard receptacle **34** in a second coupling orientation. Similarly, in this second coupling orientation, projections **86** prevent electrical contacts **80** from making electrical contact with shield **52**.

Reference is now made to FIGS. **4***a*–*e*. FIG. **4***a* is an isometric view of a reversible plug **90** that is constructed and operable in accordance with a fourth alternate embodiment of the present invention. FIG. **4***b* is a plan view of reversible plug **90** of FIG. **4***a*. FIG. **4***c* is a sectional view through line C—C of FIG. **4***b*. FIG. **4***d* is a sectional view through line D—D of FIG. **4***c*. FIG. **4***e* is an exploded view of reversible plug **90** of FIG. **4***a*. Reversible plug **90** includes a sleeve **92** and a pair of blocks **94** slidably mounted adjacent to each other in sleeve **92**. Sleeve **92** is an electrically conducting shield. Blocks **94** are configured for independently sliding between an operative position and a retracted position as will be explained in more detail with reference to FIGS. **4***e* and **4***f*. The term "independently sliding" is defined herein as each block slides between its operative position and its retracted position independently of the position of the other block. Sleeve **92** has two open ends, one at the rear of sleeve **92** and one at the end of sleeve **92** which couples with A-type USB standard receptacle **34**. The open end of sleeve **92** which couples with A-type USB standard receptacle **34** is defined as coupling open end **96**. The operative position is where blocks **94** are level with coupling open end **96** of sleeve **92**. The retracted position is where blocks **94** are pushed into sleeve **92** as far as they will move due to the constraints of reversible plug **90**. Blocks **94** include an upper block **98** and a lower block **100**. A set of four electrical contacts **102** is recessed into four grooves in the lower surface **104** of upper block **98**. Similarly, a set of four electrical contacts **106** is recessed into four grooves in the upper surface **108** of lower block **100**. Therefore, electrical contacts **102** face electrical contacts **106** when both upper block **98** and lower block **100** are in the operative position. Each block **94** includes four channels **132** therein. Electrical contacts **102** and electrical contacts **106** continue from lower surface **104** and upper surface **108**, respectively, through channels **132** to the other side of upper block **98** and lower block **100**, respectively. Therefore, there are external contact regions **138** of electrical contacts **102** and electrical contacts **106** on the upper surface **134** of upper block **98** and the lower surface **136** of lower block **100**, respectively. The function of external contact regions **138** is described in more detail below. Blocks **94** are typically formed from one or more molded plastic sections.

Reversible plug **90** also includes a rear housing **116** disposed around the rear portion of sleeve **92**. Rear housing **116** has a top rectangular plate **118**, a lower rectangular plate **120** and a central rectangular plate **122**. One end of top rectangular plate **118** is connected to central rectangular plate **122**. Similarly one end of lower rectangular plate **120** is connected to central rectangular plate **122**. Rear housing **116** is typically formed as a unitary molded plastic or element. The top surface of top rectangular plate **118** has a plurality of grooves **124** therein for recessing a plurality of electrical terminals **126** therein. Similarly, the bottom of surface of lower rectangular plate **120** has a plurality of grooves **128** therein for recessing a plurality of electrical terminals **130** therein. Each groove **124** terminates, at the end closest to coupling open end **96** of sleeve **92**, with an opening **142** in the surface of top rectangular plate **118**. Electrical terminals **126** continue through openings **142** in order to make electrical contact with external contact regions **138** of electrical contacts **102** when upper block **98** is in the operative position (best seen in FIG. **4***c*). Similarly, each groove **128** terminates, at the end closest to coupling open end **96** of sleeve **92**, with an opening **144** in the surface of lower rectangular plate **120**. Electrical terminals **130** continue through openings **144** in order to make electrical contact with external contact regions **138** of electrical contacts **106** when lower block **100** is in the operative position. The middle region of the upper surface and lower surface of sleeve **92** has a rectangular opening **140** therein so that electrical terminals **126** and electrical terminals **130** make electrical contact with electrical contacts **102** and electrical

contacts **106**, when upper block **98** and lower block **100** are in the operative position, respectively.

Blocks **94** include a restoring arrangement **110** configured for restoring blocks **94** to the operative position. Restoring arrangement **110** typically includes two helical springs, one spring for each block **94**. Each spring is disposed between its respective block **94** and central rectangular plate **122** of rear housing **116**. Each block **94** has a width and a thickness. The thickness is defined as the minimum outside dimension of the surface exposed at coupling open end **96** of sleeve **92**. It is desirable to use helical springs having an outer diameter greater than the thickness of each block **94**. This is because narrower springs are not robust enough and are not readily available. Therefore, blocks **94** have cut out portions **112** and overlapping portions **114** at their rear. Cut out portions **112** of one block **94** are configured to accommodate overlapping portions **114** of the other block **94**, and vice-versa (best seen in FIGS. **4***c*–*e*). In this way, helical springs having an outer diameter greater than the thickness of each block **94** are used without making the overall reversible plug **90** too bulky.

Reference is now made to FIGS. **4***f* and **4***g*. FIG. **4***f* is a plan view of reversible plug **90** of FIG. **4***a* inserted into A-type USB standard receptacle **34**. FIG. **4***g* is a sectional view through line G—G of FIG. **4***f*. Depending upon the coupling orientation of reversible plug **90** with A-type USB standard receptacle **34** one of blocks **94** is pushed back to the retracted position by insulating block **54** of A-type USB standard receptacle **34**. The other block remains in the operative position so that its electrical contacts make contact with electrical contacts **50** of A-type USB standard receptacle **34**. In the example of FIGS. **4***f* and **4***g*, a first coupling orientation of reversible plug **90** with A-type USB standard receptacle **34**, upper block **98** is moved by insulating block **54** of A-type USB standard receptacle **34** to the retracted position. Lower block **100** remains in the operative position with electrical contacts **106** in electrical contact with electrical contacts **50** of A-type USB standard receptacle **34**.

Similarly, if either reversible plug **90** or A-type USB standard receptacle **34** is turned over, reversible plug **90** and A-type USB standard receptacle **34** couple in a second coupling orientation. In this second coupling orientation, lower block **100** is moved by insulating block **54** of A-type USB standard receptacle **34** to the retracted position. Upper block **98** remains in the operative position with electrical contacts **102** in electrical contact with electrical contacts **50** of A-type USB standard receptacle **34**.

When either of blocks **98**, **100** are pushed back from the operative position to the retracted position electrical contacts **102** and electrical contacts **106** are electrically isolated from electrical terminals **126** and electrical terminals **130**, respectively.

Referring now to FIGS. **9***a*–**9***h*, schematic block diagrams depicting a reversible device that is constructed and operable in accordance with a preferred embodiment of the present invention. It should be noted that the term USB device is defined herein as an apparatus containing a USB plug, where as a USB appliance is defined herein as an apparatus containing a USB receptacle. Reversible USB device **306** includes a functional unit **308**. Functional unit **308** is configured to perform at least one function, a non-limiting example of which is the storing of data packages on reversible USB device **306**. Reversible USB device **306** further includes a reversible USB plug **304** which is connected to functional unit **308** and is used for interconnecting functional unit **308** with appliance **302**. Reversible plug **304** conforms with any of the above mentioned embodiments or one of their possible derivatives. Reversible device **306** also consists of a body **309**, serving as a physical encasement and housing for functional unit **308**. Body **309** is constructed so it may be gripped by the user, being the physical element that is held by the user when attempting to engage reversible USB device **306** with appliance **302**. Reversible plug **304** protrudes directly from body **309** in a rigid manner, or at least in a non-rotatable manner, and is situated asymmetrically in relation to the sides of body **309**, the asymmetric positioning being for aesthetic or functional reasons. Appliance **302** contains a standard USB receptacle **300**. FIG. **9***a* shows reversible USB device **306** positioned in a first coupling orientation in relation to appliance **302** and aligned for insertion. Yet, appliance **302** has a physical structure which prevents the insertion of reversible USB device **306** into standard USB receptacle **300** in a first coupling orientation. The coupling orientation of reversible device **306** is changed by the turning over of device **306**, as can be seen in FIG. **9***b*. In the second coupling orientation (FIG. **9***c*) the physical structure of appliance **302** does not prevent the insertion of reversible USB device **306** into standard USB receptacle **300**. Reversible USB plug **304**, which may be inserted into a standard receptacle in both first and second coupling orientation, is coupled with standard receptacle **300** (FIG. **9***d*) thus connecting reversible device **306** and appliance **302** in the prescribed manner. FIGS. **9***e*–**9***h* show another example of the coupling of reversible USB device **306** and an appliance containing a standard USB receptacle. Appliance **314** contains a standard USB receptacle **310** which is to be coupled with reversible USB plug **304** of reversible device **306**. Appliance **314** further contains another standard USB receptacle **312**. As can be seen in FIG. **9***e*, reversible USB device **306** is aligned with standard USB receptacle **310** in a first coupling orientation. In this orientation, the body of reversible USB device **306** obstructs the hollow opening of standard USB receptacle **312** due to the proximity of neighboring standard receptacles **310** and **312**. Thus, another device employing a USB plug (not shown) may not be inserted into and coupled with standard receptacle **312**. It should be noted that receptacle **312** is exemplary and may be any port, display or general feature that is obstructed by the physical structure of reversible USB device **306**. The coupling orientation of reversible USB device **306** is changed by extracting device **306** from the standard receptacle **300** (FIG. **9***f*) and turning it over (FIG. **9***g*) in the same manner as has been described in FIG. **9***b*. FIG. **9***h* shows reversible USB device **306** coupled with standard USB receptacle **310** in a second coupling orientation, receptacle **312** being unobstructed, thus allowing the coupling of another USB device with it (not shown).

The next four embodiments relate to embodiments of a reversible receptacle for coupling with an A-type USB standard plug.

Reference is now made to FIGS. **5***a* and **5***b*. FIG. **5***a* is an isometric view of a reversible receptacle (socket) **146** that is constructed and operable in accordance with a preferred embodiment of the present invention. FIG. **5***b* is an exploded isometric view of reversible receptacle **146** of FIG. **5***a*. Reversible receptacle **146** is substantially the same as reversible plug **10** of FIGS. **1***a*–*f* except for the following differences described below and in FIGS. **5***a* to **5***e*. Reversible receptacle **146** has a sleeve **148**. Sleeve **148** is an electrically conducting shield, similar to shield **52** of A-type USB standard receptacle **34**. Reversible receptacle **146** has a tongue arrangement **150** having a central insulating layer **152** with a set of electrical contacts **154** disposed in grooves **156** on an upper side **158** of central insulating layer **152** and another set of electrical contacts **166** disposed in grooves on

a lower side **162** of central insulating layer **152**. Tongue arrangement **150** is hinged so tongue arrangement **150** is able to move up and down. Reversible receptacle **146** has a centering mechanism **164** which operates substantially the same as centering mechanism **18** of reversible plug **10**.

Reference is now made to FIGS. **5***c* and **5***d*. FIG. **5***c* is a plan view of reversible receptacle **146** of FIG. **5***a* making contact with an A-type USB standard plug **168**. FIG. **5***d* is a sectional view through line D—D of FIG. **5***c*. A-type USB standard plug **168** has a hollow **170** surrounded on three sides by an electrically conducting shield **172**. A block **174** having a set of four electrical contacts **176** thereon is disposed on a fourth side of hollow **170**. Block **174** has a beveled edge **178** toward the center of shield **172**. As reversible receptacle **146** is inserted into A-type USB standard plug **168**, centering mechanism **164** is released and beveled edge **178** of block **174** of A-type USB standard plug **168** pushes tongue arrangement **150** upward.

Reference is now made to FIG. **5***e*, which is a sectional view of reversible receptacle **146** and A-type USB standard plug **168** of FIG. **5***c* fully coupled. By way of introduction, electrical contacts **50** of A-type USB standard receptacle **34** have projecting portions **51** which make electrical contact with the flat contacts of the plug inserted into hollow section **48** of A-type USB standard receptacle **34**. If the contacts of A-type USB standard receptacle **34** did not have projections, contact would not be made between electrical contacts **50** of A-type USB standard receptacle **34** and the flat contacts of a USB plug. Therefore, electrical contacts **154** and electrical contacts **166** of reversible receptacle **146** need to have projecting portions so that electrical contacts **154** and electrical contacts **166** make contact with the flat contacts of an A-type USB standard plug. However, if both electrical contacts **154** and electrical contacts **166** had projecting portions, the projecting portions would interfere with coupling of reversible receptacle **146** and A-type USB standard plug **168** since the metal sleeve surface of the standard plug facing its contacts does not have recesses to accommodate such projections. Additionally, inserting A-type USB standard plug **168** in a first orientation would result in the projecting portions of electrical contacts **154** making contact with shield **172** of A-type USB standard plug **168** and thereby short-circuiting the electrical contacts of reversible receptacle **146**, a similar situation occurs when inserting standard plug **168** in a second orientation. Therefore, electrical contacts **154** and electrical contacts **166** are generally recessed below the surface of central insulating layer **152** and are configured to be selectively deflected away from central insulating layer **152** when required, as will be described below.

Reversible receptacle **146** includes a contact raising arrangement **180**. In the example of FIG. **5***e*, reversible receptacle **146** is in a first coupling orientation with A-type USB standard plug **168**. Contact raising arrangement **180** is configured for deflecting electrical contacts **166** away from tongue arrangement **150**, so that electrical contacts **166** make mechanical contact with the electrical contacts **176** of A-type USB standard plug **168**. The term "deflecting away from tongue arrangement" is defined herein as moving the electrical contacts away from central insulating layer **152**. The phrase "contact raising" is used herein to refer to a localized deflection of one or more metallic strip providing a contact region towards the corresponding surface with which it is to make electrical contact. Electrical contacts **154** remain recessed below central insulating layer **152** and therefore electrical contacts **154** are electrically isolated from shield **172** of A-type USB standard plug **168**.

Similarly, in a second coupling orientation (not shown) of reversible receptacle **146** and A-type USB standard plug **168**, electrical contacts **154** are deflected away from tongue arrangement **150**, so that electrical contacts **154** makes mechanical contact with electrical contacts **176** of A-type USB standard plug **168**. Electrical contacts **166** remain recessed below central insulating layer **152** and therefore electrical contacts **166** are electrically isolated from shield **172** of A-type USB standard plug **168**.

Contact raising arrangement **180** is formed as part of electrical contacts **166** and electrical contacts **154** as follows. Each electrical contact **154**, **166** has a doubled over portion towards its middle to form a loop **182**. Each loop **182** is covered by an insulating cap **183**. Loop **182** is pushed by block **174** just before reversible receptacle **146** is fully coupled with A-type USB standard plug **168**. Pushing loop **182** deflects the associated contact way from tongue arrangement **150**. For example, in the first coupling orientation, loops **182** of electrical contacts **166** are pushed by block **174** thereby deflecting electrical contacts **166** away from tongue arrangement **150**. However, loops **182** of electrical contacts **154** are not moved and therefore electrical contacts **154** remain recessed in tongue arrangement **150**.

Reference is now made to FIGS. **6***a*–**6***c*. FIG. **6***a* is an isometric view of a reversible receptacle **184** (without its accompanying circuit board) that is constructed and operable in accordance with a first alternate embodiment of the present invention. FIG. **6***b* is plan view of reversible receptacle **184** of FIG. **6***a* (with its accompanying circuit board **186**). FIG. **6***c* is an exploded isometric view of reversible receptacle **184** of FIG. **6***c*. Reversible receptacle **184** is substantially the same as reversible plug **58** of FIGS. **2***a*–**2***f* except for the differences described below and shown in FIGS. **6***a* to **6***c*. Reversible receptacle **184** has a sleeve **185** with is substantially the same as sleeve **148** of reversible receptacle **146** of FIG. **5***a*. Reversible receptacle **184** has a tongue arrangement **188** centrally disposed in sleeve **185**. Tongue arrangement **188** has an upper set of contact regions **190** and a lower set of contact regions **192**. Upper set of contact regions **190** and lower set of contact regions **192** form a leaf spring electrical contact arrangement **194**. Tongue arrangement **188** has an insulated cap **196** disposed at the tip of tongue arrangement **188**. Insulated cap **196** is described in more detail with reference to FIGS. **6***d* and **6***e*. Each contact of upper set of contact regions **190** and lower set of contact regions **192** is doubled over towards the middle of each contact to form a plurality of loops **198** projecting from tongue arrangement **188**. Loops **198** of upper set of contact regions **190** are covered with an insulating cover **200**. Similarly, loop **198** of lower set of contact regions **192** are covered with an insulating cover **202**. Insulating covers **200** and **202** provide protection against the loops **198** becoming shorted against the outer shielding of the plug. Loops **198**, insulating cover **200** and insulating cover **202** form a tongue actuator **208** which is described in more detail with reference to FIG. **6***e*.

A set of four electrical terminals **204** is disposed on accompanying circuit board **186**. Electrical terminals **204** are connected to the rear of leaf spring electrical contact arrangement **194** and an electronic switching arrangement **206**. Electronic switching arrangement **206** performs the same function as electronic switching arrangement **70** of reversible plug **58** of FIG. **2***f*.

Reference is now made to FIG. **6***d*, which is a sectional of reversible receptacle **184** of FIG. **6***b* through line D—D making contact with A-type USB standard plug **168**. As A-type USB standard plug **168** is inserted into reversible

receptacle **184**, tongue arrangement **188** is pushed up by beveled edge **178** of block **174** of A-type USB standard plug **168**. Tongue arrangement **188** is pushed up so much that tongue arrangement **188** touches shield **172** of A-type USB standard plug **168**. Therefore, insulated cap **196** is configured for preventing electrical contact between leaf spring electrical contact arrangement **194** and shield **172** of A-type USB standard plug **168** as tongue arrangement **188** couples with hollow **170** of A-type USB standard plug **168**. In other words, insulated cap **196** and leaf spring electrical contact arrangement **194** are configured so that when a central plane of tongue arrangement **188** makes an acute angle with shield **172**, the first part of tongue arrangement **188** to make contact with shield **172** is insulated cap **196**. Therefore, leaf spring electrical contact arrangement **194** is prevented from making contact with shield **172**.

Reference is now made to FIG. **6***e*, which is a sectional view of reversible receptacle **184** and A-type USB standard plug **168** of FIG. **6***d*, fully coupled. As A-type USB standard plug **168** is pushed further into hollow **170** of reversible receptacle **184**, block **174** of A-type USB standard plug **168** pushes on tongue actuator **208**. Tongue actuator **208**, in turn, points tongue arrangement **188** back down towards the electrical contacts **176** of A-type USB standard plug **168** so that the central plane of tongue arrangement **188** is approximately horizontal. Insulated cap **196** and leaf spring electrical contact arrangement **194** are configured such that, as tongue arrangement **188** is pointed back down with the central plane of tongue arrangement **188** approximately horizontal, the first part of tongue arrangement **188** to make contact with electrical contacts **176** is leaf spring electrical contact arrangement **194**. Therefore, insulated cap **196** does not prevent leaf spring electrical contact arrangement **194** from making contact with electrical contacts **176**. Therefore, insulated cap **196** and leaf spring electrical contact arrangement **194** need to be configured to: (a) prevent contact between leaf spring electrical contact arrangement **194** when tongue arrangement **188** is pointing up toward shield **172**; and (b) allow contact between leaf spring electrical contact arrangement **194** and electrical contacts **176** when tongue arrangement **188** is pointed back down. Leaf spring electrical contact arrangement **194** and insulated cap **196** are symmetrical about the central plane of tongue arrangement **188** so that in a second coupling orientation leaf spring electrical contact arrangement **194** makes contact with electrical contacts **176**, but leaf spring electrical contact arrangement **194** does not make contact with shield **172**.

Reference is now made to FIGS. **6***f* to **6***i*. FIG. **6***f* is a sectional view of a reversible receptacle **264** that is constructed and operable in accordance with a second alternate embodiment of the present invention. FIG. **6***g* is an exploded isometric view of reversible receptacle **264** of FIG. **6***f*. FIG. **6***h* is a rear isometric view of a tongue arrangement **266** of reversible receptacle **264** of FIG. **6***f*. FIG. **6***i* is a front isometric view of tongue arrangement **266** of FIG. **6***h*. Reversible receptacle **264** is substantially the same as reversible receptacle **184** of FIGS. **6***a* to **6***e* except for the differences described below and shown in FIGS. **6***f* to **6***i*. Tongue arrangement **266** has an insulating layer **270** disposed between a set of electrical contact regions **272** and a set of electrical contact regions **274**. Set of electrical contact regions **272** and set of electrical contact regions **274** are formed as a leaf spring electrical contact arrangement **276**. Set of electrical contact regions **272** and set of electrical contact regions **274** are not electrically connected at a tip **278** of tongue arrangement **266**. As with reversible receptacle **184**, the primary mechanical element of tongue arrangement **266** of reversible receptacle **184** is the set of metallic strips which also serves as a leaf spring electrical contact arrangement **276**. Insulating layer **270** is primarily for electrically isolating set of electrical contact regions **272** and set of electrical contact regions **274** over the flexible portion of tongue arrangement **266**. Reversible receptacle **264** also includes a printed circuit board interface connector arrangement **280** having four terminals **282** disposed thereon. Each terminal **282** is configured for connection to a printed circuit board **284**. Printed circuit board interface connector arrangement **280** has a crossover arrangement **286** for electrically connecting electrically corresponding contact regions of set of electrical contact regions **272** and set of electrical contact regions **274** to terminals **282**. Therefore, in whichever coupling orientation reversible receptacle **264** is inserted into an A-type USB standard plug, the same terminals of the A-type USB standard plug are in electrical contact with the same terminals **282** of printed circuit board interface connector arrangement **280**.

Reference is now made to FIGS. **7***a*–*c*. FIG. **7***a* is an isometric view of a reversible receptacle **210** that is constructed and operable in accordance with a third alternate embodiment of the present invention. FIG. **7***b* is a plan view of reversible receptacle **210** of FIG. **7***a*. FIG. **7***c* is a sectional view through line C—C of FIG. **7***b*. Reversible receptacle **210** is substantially the same as reversible plug **74** except that reversible receptacle **210** has selectively raisable contacts **212** on both sides of reversible receptacle **210** using a mechanism similar to the contact raising mechanism described above. Additionally, reversible receptacle **210** does not have flexible surface projections included with reversible plug **74**.

Reference is now made to FIG. **7***d*, which is a sectional view of reversible receptacle **210** of FIG. **7***c* coupled with A-type USB standard plug **168**. FIG. **7***d* shows a first coupling orientation of reversible receptacle **210** with A-type USB standard plug **168**. The lower raisable contacts **212** are deflected away from the interface element of reversible receptacle **210** in order to make contact with electrical contacts **176** of A-type USB standard plug **168**. The upper raisable contacts **212** remain recessed in the interface element of reversible receptacle **210** to prevent shorting with shield **172** of A-type USB standard plug **168**.

Reference is now made to FIGS. **8***a*–**8***c*. FIG. **8***a* is an isometric view of a reversible receptacle **214** that is constructed and operable in accordance with a fourth alternate embodiment of the present invention. FIG. **8***b* is an exploded isometric view of reversible receptacle **214** of FIG. **8***a*. FIG. **8***c* is an exploded isometric view of a lower block **216** of reversible receptacle **214** of FIG. **8***b*. Reversible receptacle **214** is substantially the same as reversible plug **90** of FIGS. **4***a*–**4***g* except for the following differences described below and shown in FIGS. **8***a* to **8***g*. Reversible receptacle **214** has a sleeve **220** which is the same as sleeve **148** of FIG. **5***a*. As sleeve **220** is shorter than sleeve **92** of reversible plug **90**, rectangular openings **140** disposed in reversible plug **90** are not needed in sleeve **220**. Additionally, as reversible receptacle **214** couples with the flat electrical contacts **176** of A-type USB standard plug **168**, the contacts of reversible receptacle **214** need to be raisable. Reversible receptacle **214** includes lower block **216** and an upper block **218**. Lower block **216** has a set of four recessed electrical contacts **222** with loops. Upper block **218** has a set of four recessed electrical contacts **224** with loops. The loops of electrical contacts **222** are mechanically connected via an insulating element **226** having two actuating levers **228** thereon. Actuating levers **228** are configured to be pushed by A-type USB

standard plug **168** when reversible receptacle **214** and A-type USB standard plug **168** are coupled in order to raise electrical contacts **222**. Similarly, electrical contacts **224** are connected via an insulting element **230** having two actuating levers **232** thereon. Upper block **218** includes two grooves **234** disposed between the grooves of electrical contacts **224** to accommodate actuating levers **228** of electrical contacts **222** of lower block **216** during relative movement of lower block **216** and upper block **218**. Similarly, lower block **216** includes two grooves **236** disposed between the grooves of electrical contacts **222** to accommodate actuating levers **232** of electrical contacts **224** of upper block **218** during relative movement of lower block **216** and upper block **218**.

Reference is now made to FIGS. **8***d–e*. FIG. **8***d* is a plan view of reversible receptacle **214** of FIG. **8***a* making contact with A-type USB standard plug **168**. FIG. **8***e* is a sectional view through line E—E of FIG. **8***d*.

Reference is now made to FIGS. **8***f* and **8***g*. FIG. **8***f* is a sectional view of reversible receptacle **214** and A-type USB standard plug **168** of FIG. **8***d*, fully coupled. FIG. **8***g* is an isometric view of reversible receptacle **214** of FIG. **8***f* (having sleeve **220** removed for clarity) when fully coupled with A-type USB standard plug **168** of FIG. **8***f*, A-type USB standard plug **168** being removed for clarity. FIGS. **8***f* and **8***g* show a first coupling orientation of reversible receptacle **214** and A-type USB standard plug **168**. Upper block **218** has been pushed back to the retracted position by block **174** of A-type USB standard plug **168**. Additionally, block **174** pushes actuating levers **228** which raises electrical contacts **222** away from lower block **216** so that electrical contacts **222** makes mechanical and electrical contact with electrical contacts **176** of A-type USB standard plug **168**.

Similarly, in a second coupling orientation electrical contacts **224** are raised away from upper block **218** so that electrical contacts **224** make contact with electrical contacts **176** of A-type USB standard plug **168**.

Referring now to FIG. **10**, a schematic block diagram depicting an appliance incorporating a reversible USB receptacle with relation to a device containing a standard USB plug. Reversible USB appliance **324** includes functional unit **321**. Functional unit **321** is configured to perform at least one function, a non-limiting example of which is performing mathematical operations. Appliance **324** further contains a reversible USB receptacle **326** which is connected to functional unit **321** and is used for interconnecting functional unit **321** with USB device **320**. Reversible receptacle **326** conforms with any of the above mentioned embodiments or one of their possible derivatives. Reversible USB appliance **324** also consists of a body **325**, serving as a physical encasement and housing for functional unit **321**. Reversible receptacle **326** is typically rigidly joined to body **325** of reversible USB appliance **324**. USB device **320** contains a standard USB plug **322**, which is to be coupled with reversible USB receptacle **326**. Appliance **324** allows the coupling of USB device **320** in two coupling orientation, thus creating the same advantageous effect of alternate coupling as has been described in reference to FIGS. **9***a–***9***h*.

It will be appreciated by persons skilled in the art that the present invention is not limited to what has been particularly shown and described hereinabove. Rather, the scope of the present invention includes both combinations and sub-combinations of the various features described hereinabove, as well as variations and modifications thereof that are not in the prior art which would occur to persons skilled in the art upon reading the foregoing description.

What is claimed is:

1. A reversible connector for coupling with a USB A-type standard connector, the standard connector having a hollow section, a fixed set of four electrical contacts disposed on one side of the hollow section and an electrically conducting shield disposed on three sides of the hollow section, the reversible connector comprising:

a sleeve configured for cooperating with the electrically conducting shield; and

a flexible tongue arrangement centrally disposed in said sleeve, said tongue arrangement including a set of at least four metallic strips, said metallic strips providing a first set of four electrical contact regions on a first side of said tongue arrangement and a second set of four electrical contact regions on a second side of said tongue arrangement, said metallic strips forming a primary structural element of said tongue arrangement, said tongue arrangement being configured such that:

(a) in a first coupling orientation of the reversible connector with the standard connector, said tongue arrangement is moved in a first direction by the standard connector and said first set of electrical contact regions is mechanically connected with the set of electrical contacts of the standard connector; and

(b) in a second coupling orientation of the reversible connector with the standard connector, said tongue arrangement is moved in a second direction by the standard connector and said second set of electrical contact regions is mechanically connected with the set of electrical contacts of the standard connector.

2. The reversible connector of claim **1**, wherein the reversible connector is a plug and the standard connector is a USB A-type receptacle.

3. The reversible connector of claim **1**, wherein the reversible connector is a receptacle and the standard connector is a USB A-type plug.

4. The connector of claim **1**, further comprising a printed circuit board interface connector arrangement having four terminals disposed thereon, each of said four terminals being configured for connection to a printed circuit board, said printed circuit board connector arrangement connected to an electronic switching arrangement for electrically connecting electrically corresponding contact regions of said first set of electrical contact regions and said second set of electrical contact regions to said terminals.

5. The connector of claim **1**, further comprising a printed circuit board interface connector arrangement having four terminals disposed thereon, each of said four terminals being configured for connection to a printed circuit board, said printed circuit board connector arrangement having a cross-over arrangement for electrically connecting electrically corresponding contact regions of said first set of electrical contact regions and said second set of electrical contact regions to said terminals.

6. The connector of claim **1**, further comprising a contact raising arrangement configured for:

(a) deflecting said first set of contact regions in said first coupling orientation so that said first set of contact regions makes mechanical contact with the set of electrical contacts of the standard connector; and

(b) deflecting said second set of contact regions in said second coupling orientation so that said second set of contact regions makes mechanical contact with the set of electrical contacts of the standard connector.

7. The connector of claim **1**, further comprising a centering mechanism configured for maintaining said tongue

arrangement centrally within said sleeve prior to said tongue arrangement and the standard connector making contact.

8. The connector of claim **1**, wherein said set of metallic strips functions as a leaf spring to provide flexibility along a majority of said tongue arrangement.

9. The connector of claim **1**, wherein said set of metallic strips includes at least a first group of four metallic strips providing said first set of electrical contact regions and a second group of four metallic strips providing said set of second electrical contact regions, said first group of metallic strips being electrically insulated from said second group of metallic strips.

10. The connector of claim **1**, wherein said tongue arrangement has a tip, said tongue arrangement including an insulated cap disposed at said tip, said insulated cap being configured for preventing electrical contact between said leaf spring electrical contact arrangement and said sleeve.

11. The connector of claim **1**, further comprising a tongue actuator configured to point said tongue arrangement toward the set of contacts of the standard connector as said tongue arrangement is being coupled with the hollow section of the standard connector.

12. The connector of claim **1**, wherein each of said metallic strips forms part of a double-sided conductor providing one of said first set of electrical contact regions and one of said second set of electrical contact regions.

13. The connector of claim **7**, wherein said centering mechanism is further configured such that, initial contact of said centering mechanism with the standard connector releases said centering mechanism thereby allowing movement of said tongue arrangement.

14. The connector of claim **13**, wherein said centering mechanism includes a spring recoiled sliding locking mechanism.

15. The connector of claim **9**, further comprising a printed circuit board interface connector arrangement having four terminals disposed thereon, each of said four terminals being configured for connection to a printed circuit board, said printed circuit board connector arrangement having a cross-over arrangement for electrically connecting electrically corresponding contact regions of said first set of electrical contact regions and said second set of electrical contact regions to said terminals.

16. The connector of claim **11**, wherein said tongue arrangement has a tip, said tongue arrangement including an insulated cap disposed at said tip, said tongue arrangement being configured for:

(a) preventing electrical contact between said leaf spring electrical contact arrangement and the shield of the standard connector as said tongue arrangement is being coupled with the hollow section; and

(b) making electrical contact between said leaf spring electrical contact arrangement and the set of contacts of the standard connector when said tongue arrangement is coupled with the hollow section.

17. The connector of claim **10**, wherein said insulated cap is configured for preventing electrical contact between said leaf spring electrical contact arrangement and said sleeve when a central plane of said tongue arrangement forms an acute angle with the surface of the sleeve and to allow electrical contact between said leaf spring contact arrangement and a contact parallel to said central plane.

18. The connector of claim **12**, wherein said double-sided conductor is formed from a single one of said metallic strips.

19. The connector of claim **12**, wherein at least one of said double-sided conductors forms an electrical connection with a first of said electrical contacts of the standard connector when in said first coupling orientation and with a second of said electrical contacts of the standard connector when in said second coupling orientation, the connector further comprising an electronic switching arrangement for reversing a connection of two of said double-sided conductors to a printed circuit board.

20. The connector of claim **19**, wherein said electronic switching arrangement is responsive to a polarity of a power supply associated with two of said electrical contacts of the standard connector to reverse said connection.

21. A reversible connector for coupling with a USB A-type standard connector, the standard connector having a hollow section, a fixed set of four electrical contacts disposed on one side of the hollow section and an electrically conducting shield disposed on three sides of the hollow section, the reversible connector comprising:

(a) a sleeve configured for cooperating with the electrically conducting shield;

(b) a flexible tongue arrangement centrally disposed in said sleeve, said tongue arrangement including a set of four metallic strips, each of said metallic strips forming part of a double-sided conductor providing one of a first set of four electrical contact regions on a first side of said tongue arrangement and one of a second set of four electrical contact regions on a second side of said tongue arrangement, said tongue arrangement being configured such that:

(i) in a first coupling orientation of the reversible connector with the standard connector, said tongue arrangement is moved in a first direction by the standard connector and said first set of electrical contact regions is mechanically connected with the set of electrical contacts of the standard connector; and

(ii) in a second coupling orientation of the reversible connector with the standard connector, said tongue arrangement is moved in a second direction by the standard connector and said second set of electrical contact regions is mechanically connected with the set of electrical contacts of the standard connector,

wherein at least one of said double-sided conductors forms an electrical connection with a first of said electrical contacts of the standard connector when in said first coupling orientation and with a second of said electrical contacts of the standard connector when in said second coupling orientation; and

(c) an electronic switching arrangement for reversing a connection of two of said double-sided conductors to a printed circuit board.

22. The connector of claim **21**, wherein said electronic switching arrangement is responsive to a polarity of a power supply associated with two of said electrical contacts of the standard connector to reverse said connection.

* * * * *