UNITED STATES DISTRICT COURT
FOR THE WESTERN DISTRICT OF TEXAS
WACO DIVISION

REED SEMICONDUCTOR CORP.

Plaintiff,

v.

MONOLITHIC POWER SYSTEMS, INC.

Defendant.

Civil Action No. 6:25-cv-00449

JURY TRIAL DEMANDED

COMPLAINT FOR PATENT INFRINGEMENT

Plaintiff Reed Semiconductor Corp. ("Reed" or "Plaintiff") files this Complaint for patent infringement against Defendant Monolithic Power Systems, Inc. ("MPS" or "Defendant"). Reed alleges infringement of U.S. Patent No. 7,960,955 (the "'955 Patent") and, in support thereof, alleges as follows:

THE NATURE OF THE ACTION

1. This is a civil action for patent infringement.

2. Founded in Rhode Island in 2019, Reed is a world leader in the design, development, manufacture, and sale of semiconductor products, including power management solutions such as power converters, that are needed to power many everyday electronic devices like smartphones and laptop computers. Reed's founders hold Ph.D. degrees in electrical engineering and spent long careers working in the same field while employed at market leader, Texas Instruments. Since its founding, Reed has achieved significant growth year over year and great financial success due to its unmatched technical innovation and ability to offer high-performance products that are used in consumer electronics, automotive, communications, and storage products. Reed's mission is to streamline power delivery, conserving energy, and reducing

MPS
Exhibit 1012
MPS v. Reed
IPR2026-00165

both the size and cost of solutions.

3. MPS has infringed and continues to infringe Reed's U.S. Patent No. 7,960,955, directed to power conversion, a true and correct copy of which is attached hereto as Exhibit 1. MPS has infringed and continues to infringe the '955 Patent by making, using, selling, offering for sale, and/or importing into the United States infringing components in violation of 35 U.S.C. § 271.

4. MPS competes directly against Reed for customers of power conversion products, including products that are designed for the same applications as Reed's products.

5. Upon information and belief, one of MPS's "key product families" is power management integrated circuits. Exhibit 2, Monolithic Power Sys., Inc., Annual Report for the Year Ended December 31, 2024 (Form 10-K) (March 3, 2025), p. 3. MPS's revenue largely originates from the Asia market, and its revenue in 2022, 2023, and 2024 was 94%, 87%, and 86%, respectively, from that market. *Id.* Further, MPS's product sales are largely made through distribution agreements with third-party distributors and resellers, including 83%, 80%, and 90% in 2022, 2023, and 2024, respectively. *Id.* at 55. MPS maintains an inventory of its products, and this totaled 11.6% of MPS's assets on December 31, 2024. *Id.* at 42.

THE PARTIES

6. Reed is a corporation organized and existing under the laws of Delaware with its principal place of business at 875 Centerville Road, Warwick, Rhode Island 02886.

7. Upon information and belief, MPS is a corporation organized and existing under the laws of Delaware, having its principal place of business at 5808 Lake Washington Boulevard NE, Kirkland, Washington 98033.

JURISDICTION AND VENUE

8. This is an action for patent infringement arising under the patent laws of the United

States, 35 U.S.C. §§ 1 et seq., including 35 U.S.C. § 271. This Court has subject matter jurisdiction under 28 U.S.C. §§ 1331 and 1338(a).

9. This Court has supplemental jurisdiction over all claims other than the patent infringement claims in this case under 28 U.S.C. § 1367(a).

10. General personal jurisdiction over MPS is proper in this District because, upon information and belief, MPS has engaged in systematic and continuous business activities in Texas.

11. Upon information and belief, and subject to a reasonable opportunity for discovery, MPS has committed, aided, abetted, contributed to, and induced infringement of the ’955 Patent across the United States and specifically within this District.

12. Upon information and belief, MPS derives substantial revenue from its sale of semiconductor integrated circuit products that infringe one or more claims of the ’955 Patent sold in Texas through its network of distributors in Texas and this District. The accused products include but are not limited to: NB680, NB680A, NB670, MP2225, MP2229, MP2317, MP2329, MP2384, MP2497, MP2905, MP2918, MP4420, MP4420A, MP4420H, MP4423, MP4473, MP8606, MP8756, MP8758, MP8758H, MP8770, MP8770C, MP8774, MP8795, MP8795H, MP9447, MP9473, MP9942, MP9942A, MP29296, MP38891, MPQ4420A, MPQ4470, MPQ4470A, MPQ4473, MPQ8623, MPQ8626, MPQ8632, MPQ8633A, MPQ8633B, MPQ8634A, MPQ8634B, MPQ8636, MPQ8645P, MPQ8655, MPM3690, MPM3810, MPM3814, MPM3860, MPM3864, and all other MPS power management products that include a linear regulator to stabilize an input voltage (collectively, the “MPS Accused Products”).

13. Upon information and belief, MPS has sold, is selling, and offers to sell MPS Accused Products across the entirety of Texas and specifically in this District through one or more

authorized resellers including but not limited to: Future Electronics, located in Austin, Texas and El Paso, Texas; and Avnet, Inc. located in Austin, Texas, as shown in Exhibit 3 (highlighting added).

14. Upon information and belief, MPS's systematic and continuous business activities in Texas and this District include employing at least six individuals in this District: Jason Bone, located in Hutto, Texas; Roberto "G.," located in Austin, Texas; Sam Robinson, located in Austin, Texas; Victor Gallagher, located in Austin, Texas; and David Fratzke, located in Austin, Texas. MPS also employs two individuals elsewhere in Texas: Artur Lewinski, located in Dallas, Texas; and Nadeem Zaki, located in Dallas, Texas. Exhibit 4 depicts social media searches and profiles of each employee.

15. Upon information and belief, many of these employees reside in Texas, including this District, primarily to design, serve end users, or sell and offer to sell MPS Accused Products to customers in this District, and MPS specifically intends to hire employees located in Texas generally and this District specifically to carry out the business of MPS including the aforementioned infringing activities.

16. Additionally, this Court has specific jurisdiction over MPS because the company purposefully directed its infringing activities at Texans in this District via its aforementioned distributors and employees in this state; this suit's claim arises out of the direct, induced, and contributory infringement of the '955 Patent as a result of MPS's infringing activity in Texas, including the sale and offer for sale of the MPS Accused Products in Texas; and asserting personal jurisdiction against an infringer with such strong ties to the jurisdiction is manifestly reasonable and fair.

17. MPS directly infringes at least one or more of the claims of the '955 Patent through

its sale, offer for sale, and/or use of the MPS Accused Products throughout the United States and also in this District. For example, MPS commits acts of direct infringement when it sells and offers for sale the MPS Accused Products through MPS's website, including, but not limited to the NB680, as depicted in Exhibit 5. By accessing this website, residents and entities throughout the United States and this District can learn about and download information on MPS's Accused Products. MPS's website also allows consumers in this District to buy the Accused Products directly from MPS and includes detailed pricing information. The website includes a shopping cart feature that, upon information and belief, allows residents and entities in this District to customize their order and then purchase Accused Products directly from MPS and have the Accused Products shipped to locations within this District. And even if a resident or entity within this District does not use the ordering process described above, MPS's website includes links that allow users in this District to discuss the MPS Accused Products with an MPS engineer or get a quote to make a direct purchase in this District after further direct contact with MPS sales personnel.

18. MPS also committed—and continues to commit—acts of indirect infringement in this District by offering to sell, selling and distributing MPS Accused Products for use in practicing at least one or more of the claims of each of the '955 Patent. As set out in the documents, videos, informational and instructional materials offered on MPS's website, the MPS Accused Products are used to practice the claimed inventions in the '955 Patent, the MPS Accused Products are a material part of those claimed inventions, MPS knows that the MPS Accused Products are especially made or especially adapted for use in infringement of the '955 Patent, and the MPS Accused Products are not a staple article or commodity of commerce suitable for substantial non-infringing use.

19. MPS purposefully availed itself of the rights and protections of the laws of the State of Texas through its current use of the courts in Texas, including in this District. For example, MPS filed two actions in this District on September 25, 2020 (C.A. Nos. 6:20-cv-00876, against Meraki Integrated Circuit (Shenzhen) Technology, Ltd., Baseus Accessories LLC, Promate Electronic Co., Ltd., QingMi (Beijing) Technology Co., Ltd., and Shenzhen Times Innovation Technology Co., Ltd.; and 6:22-cv-00320, against Meraki Integrated Circuit (Shenzhen) Technology, Ltd.), including at least one action alleging patent infringement. Upon information and belief, MPS availed itself of the courts in this jurisdiction and this District purposefully over other Districts where it could have initiated its lawsuit against foreign corporation defendants, such as Meraki Integrated Circuit (Shenzhen) Technology, Ltd.

20. It cannot be burdensome or against the traditional notions of fair play and substantial justice for MPS to litigate a patent infringement case in this District when it previously litigated one here. MPS intentionally chose to subject itself to this District on its own accord and previously opposed requests that the actions listed in paragraph 19 be transferred out of this District. MPS has proven able to navigate the courts in this District and defend its interests here. Ultimately, Texas and this District have a substantial interest in adjudicating a dispute regarding acts of infringement committed in this District, including acts committed by employees and distributors located in this District. These interests are substantial and strongly outweigh any conceivable litigation burden to MPS, making the exercise of jurisdiction reasonable and fair.

21. In sum, this Court has personal jurisdiction over MPS due to its continuous and systematic contacts in the State of Texas and this District, including, but not limited to, its employees and distributors located in this District and its commission of acts of patent infringement specifically directed at residents and entities of Texas and this District. These facts,

coupled with the contemporaneous litigation brought by MPS in this exact District supports a finding that personal jurisdiction exists over MPS in this District, consistent with all Constitutional limits.

22. Venue is also proper in this District under 28 U.S.C. § 1391(b)(2) and 28 U.S.C. § 1400(b) because MPS has a regular and established place of business within this District and commits acts of infringement in this District.

23. MPS has at least one physical place of business in this District. It employs at least five individuals in this District: Jason Bone, located in Hutto, Texas; Roberto "G.," located in Austin, Texas; Sam Robinson, located in Austin, Texas; Victor Gallagher, located in Austin, Texas; and David Fratzke, located in Austin, Texas—who, subject to a reasonable opportunity for discovery, either work together at a physical office within this District or work from remote offices of MPS in their homes or other locations in this District, at the request, direction, and benefit of MPS. Exhibit 4. Even if these employees work from their homes, these constitute a physical place of business for MPS within this District because, on information and belief, these employees have MPS-owned or provided computer systems that contain information about the MPS Accused Products, MPS literature about the MPS Accused Products, and MPS documents about the MPS Accused Products, all of which substantiate that MPS business is conducted from these locations in this District, including infringement of the '955 Patent. Subject to a reasonable opportunity for discovery, some employees are believed to have received knowledge, information, training, direction, and proprietary tools from MPS that enable them to operate onsite with customers in this District, have MPS-owned promotional materials that enable them to engage in sales activities in this District, and have inventory including but not limited to samples or other operational MPS Accused Products. Further, on information and belief, the employees of MPS in this District have

specialized knowledge of the infringement of the ’955 Patent including but not limited to unique knowledge about how MPS, through these employees, sells MPS Accused Products and induces and contributes to the infringement of the ’955 Patent. More specifically, on information and belief, MPS’s employees in this District have specific knowledge and information regarding MPS’s intent to sell its MPS Accused Products. This includes MPS’s activities in testing, instructing, and supporting its customers in this District to utilize the MPS Accused Products in a manner that infringes the ’955 Patent.

24. Additionally, upon information and belief, MPS stores MPS Accused Products at one or more authorized resellers within this District: Future Electronics, located in Austin, Texas; Future Electronics, located in El Paso, Texas; and Avnet, Inc., located in Austin, Texas. Subject to a reasonable opportunity for discovery, MPS’s Accused Products occupy physical storage and retail space with these distributors before being sold to their final customer, an additional form of a physical place of business in this District.

25. Second, MPS’s operation in this District is regular, steady, and uniform—not sporadic. Upon information and belief, employees hired by MPS have worked for MPS for years in this District, including one employee in this District who has worked for MPS for over ten years. MPS attempts to hire new employees specifically for this District, and the business relationships with its distributors suggest that MPS has an established business presence in this District. Exhibit 6 depicts an online job posting for a position posted by MPS in this District.

26. Third, this District is the “place” of MPS. The company’s at least five employees, upon information and belief and subject to a reasonable opportunity for discovery, are purposely kept in this District by MPS in order to serve and sell to customers of MPS in this District including engaging in infringing activity in relation to the ’955 Patent. As mentioned previously, MPS’s

attempt to hire a Senior Engineer in Austin to help with onsite troubleshooting for key customers in this District underscores the point that this District is the place of MPS as an employer. The representatives of MPS in this District also have specific and unique knowledge about sale of MPS Accused Products including but not limited to the unique knowledge about how MPS power converters such as point of load regulators are incorporated into power control systems that directly infringe certain claims of the ’955 Patent. This District is not merely the place where MPS’s employees live, but the place where MPS intends them to have substantive, continuous, on-the-ground operations for its customers, including but not limited to operations that constitute infringement of the ’955 Patent. The operations include but are not limited to effectively having MPS offices in the homes of the employees residing in this District.

27. MPS also commits acts of infringement in this District. MPS directly and indirectly infringes at least one or more of the claims of each of the ’955 Patent through its sale, offer for sale, distribution, and/or use of MPS Accused Products including but not limited to certain of its power solutions such as power modules in this District.

28. As set forth above, MPS committed—and continues to commit—acts of direct and indirect infringement in this District through its sale and offering for sale of the MPS Accused Products through its website, including providing informational and instructional materials to its customers in this District.

THE ’955 PATENT

29. On June 14, 2011, the U.S. Patent and Trademark Office duly and legally issued U.S. Patent 7,960,955 (“the ’955 Patent”), entitled “Power Supply Device, Electronic Device Using the Same, and Semiconductor Device” listing Tomoyuki Ito, Yoichi Tamegai, Koki Tamakawa, and Iso Yamamoto as the inventors, from a Patent Cooperation Treaty patent application PCT/JP2006/324029 filed November 30, 2006, which entered the national stage on

June 9, 2008. The ’955 Patent claims priority from a Japanese Application, No. 2005-356077, filed on December 09, 2005. A true and correct copy of the ’955 Patent is attached hereto as Exhibit 1 and incorporated herein by reference.

30. The ’955 Patent claims patent-eligible subject matter and is valid and enforceable. Further, the claims of the ’955 Patent are entitled to a presumption of validity.

31. Reed is the assignee of the ’955 Patent by a written assignment effective as of August 8, 2025, and duly submitted for recordation with the U.S. Patent and Trademark Office on August 15, 2025, and is the exclusive owner of all rights, title, and interest in and to the inventions claimed in the ’955 Patent and its underlying patent applications, including the right to sue for injunctive relief and the right to sue and recover for all past, present, and future damages for infringement of the ’955 Patent. As of the date of filing this Complaint, the assignment is processing with the U.S. Patent and Trademark Office. Exhibit 7 includes the patent assignment cover sheet as filed with the U.S. Patent and Trademark Office.

32. MPS is currently not licensed to practice the ’955 Patent.

FACTUAL BACKGROUND

33. Reed was founded in 2019 by a team of veteran Texas Instrument (TI) engineers, who excelled and brought their expertise in semiconductor design and packaging to Reed. These engineers are Dr. Wenkai Wu, Dr. Jiwei Fan, and Mr. Hal Chen, who built Reed from the ground up in Rhode Island.

34. Reed is at the forefront of developing innovative solutions for the most challenging power management issues. Since its founding, Reed has become a powerhouse and an industry leader in the fabless semiconductor space, working closely with Tier 1 wafer foundries and assembly partners worldwide. Reed designs, develops, markets, and sells semiconductor products, including power conversion products.

35. As AI and High-Performance Computing (HPC) continue to raise power demands, data centers face the challenge of managing dynamic loads while minimizing energy loss. Reed's innovative solutions address these challenges, assisting automotive, communications, and industrial customers with their high performing products for their ability to handle wide voltage ranges, meet stringent EMI requirements, and reduce both size and cost.

36. Reed specializes in delivering Multiphase Controllers, Smart Power Stages, Power Modules, Intermediate Bus Converters (IBC), eFuses, Power Mux, and Point-of-Load (POL) DC-DC Controllers, ensuring top-tier performance and quality across Reed's entire product range.

37. Reed is developing its patent portfolio, having already obtained several issued patents from the USPTO, with multiple patent applications pending. The patents protect the electronic components, techniques and systems Reed has developed, memorializing and protecting Reed's groundbreaking research and innovation.

MPS'S PRODUCTS INFRINGE THE '955 PATENT

38. MPS has and continues to directly and/or indirectly infringe (by inducing infringement) one or more claims including at least claim 1 of the '955 Patent through making, using, offering for sale, selling and/or importing power management products that include a linear regulator to stabilize an input voltage in the United States and/or importing into the United States, products and systems that infringe upon the '955 Patent (i.e., the MPS Accused Products), and inducing others to do the same, including MPS's downstream customers.

39. The MPS Accused Products are power management products that include a linear regulator to stabilize an input voltage are accused of meeting the claim limitations of the '955 Patent. MPS designs and manufactures these semiconductor integrated circuits that infringe the '955 Patent in the United States. The accused power supply products have applications in many types of devices designed and manufactured by Reed's customers, including various electronic

devices. The MPS Accused Products also include evaluation boards that have MPS power supply products implemented by MPS on a systems-level board in combination with other necessary electronic components, that MPS makes, uses, offers for sale, sells, and/or imports to its customers in the United States, for their evaluation of MPS's step-down converter products, as part of the design-in process.

40. Based on information and belief, the MPS Accused Products include, but are not limited to NB680, NB680A, NB670, MP2225, MP2229, MP2317, MP2329, MP2384, MP2497, MP2905, MP2918, MP4420, MP4420A, MP4420H, MP4423, MP4473, MP8606, MP8756, MP8758, MP8758H, MP8770, MP8770C, MP8774, MP8795, MP8795H, MP9447, MP9473, MP9942, MP9942A, MP29296, MP38891, MPQ4420A, MPQ4470, MPQ4470A, MPQ4473, MPQ8623, MPQ8626, MPQ8632, MPQ8633A, MPQ8633B, MPQ8634A, MPQ8634B, MPQ8636, MPQ8645P, MPQ8655, MPM3690, MPM3810, MPM3814, MPM3860, MPM3864, and all other MPS power management products that include a linear regulator to stabilize an input voltage (collectively, the "MPS Accused Products"). (*See generally* Exhibit 8, datasheets for respective products). The MPS Accused Products provide a power supply which can generate a stabilized voltage without being affected by switching noise.

41. MPS sells the MPS Accused Products both directly through its own sales force and website and indirectly through distributors, such as depicted in Exhibit 9.

42. The MPS Accused Products are available for direct purchase from the MPS website, as depicted in Exhibit 9. MPS directly assists its customers with purchasing the MPS Accused Products, once interested customers contact MPS through its website by the inquiry form.

43. Further, in concert with its distributors and customers, MPS causes or induces the Accused Products to be made, used, offered to be sold, sold within the United States, or imported

into the United States.

44. On information and belief, MPS has entered into indemnity agreements with certain customers and suppliers in the event of patent infringement litigation initiated against them. Exhibit 2, p. 4.

45. On information and belief, MPS directs and controls the MPS Accused Products to operate in an infringing manner by providing the power management products that include a linear regulator to stabilize the input voltage hardware and providing datasheets and schematics that describe how the MPS products infringe the ’955 Patent. Furthermore, MPS services and troubleshoots the MPS Accused Products that it provides to its customers.

46. Upon information and belief, MPS has had knowledge of the ’955 Patent since its issuance at least because MPS’s actions in its own patent filings reveal that MPS investigates the patent portfolios of active competitors, including Japanese competitors in the power management product market. In fact, MPS has cited to dozens of competitor patents to the U.S. Patent Office when applying for its own patents. As such, MPS would have investigated competitor patent portfolios and therefore had knowledge of the ’955 Patent and MPS’s likely infringement of it long before Reed acquired the patent.

47. MPS’s infringement has been and continues to be willful.

48. Based on information and belief, MPS Accused Products infringe at least claim 1 of the ’955 Patent, which appears below:

> 1. A power supply apparatus for use with an input voltage provided from outside, the power supply apparatus comprising:
>
> a switching power supply which stabilizes the input voltage;
>
> a reference voltage source which generates a predetermined reference voltage; and
>
> a linear regulator which stabilizes the input voltage, based on the reference voltage generated by the reference voltage source; wherein

an output voltage of the linear regulator is supplied as a power supply voltage of a controller of the switching power supply and the reference voltage source, and the input voltage is not directly supplied to the controller as a power supply voltage.

49. On information and belief, NB680 is provided as representative of all the Accused Products. On information and belief, the NB680 is representative of the other Accused Products based on structural similarities in the hardware of the power management products that include a linear regulator to stabilize an input voltage, and similarities in the disclosure of the corresponding product datasheets, as relates to claim 1 of the '955 patent. On information and belief, MPS produces a power supply apparatus for use with an input voltage provided from outside the power supply apparatus. This is evidenced by the Typical Application block diagram published in the NB680 Datasheet from MPS's website depicting a power supply apparatus (NB680) and the external input voltage. Exhibit 5. On information and belief, VIN is also connected to the positive pole of the external power supply. This satisfies "a power supply apparatus for use with an input voltage provided from the outside."

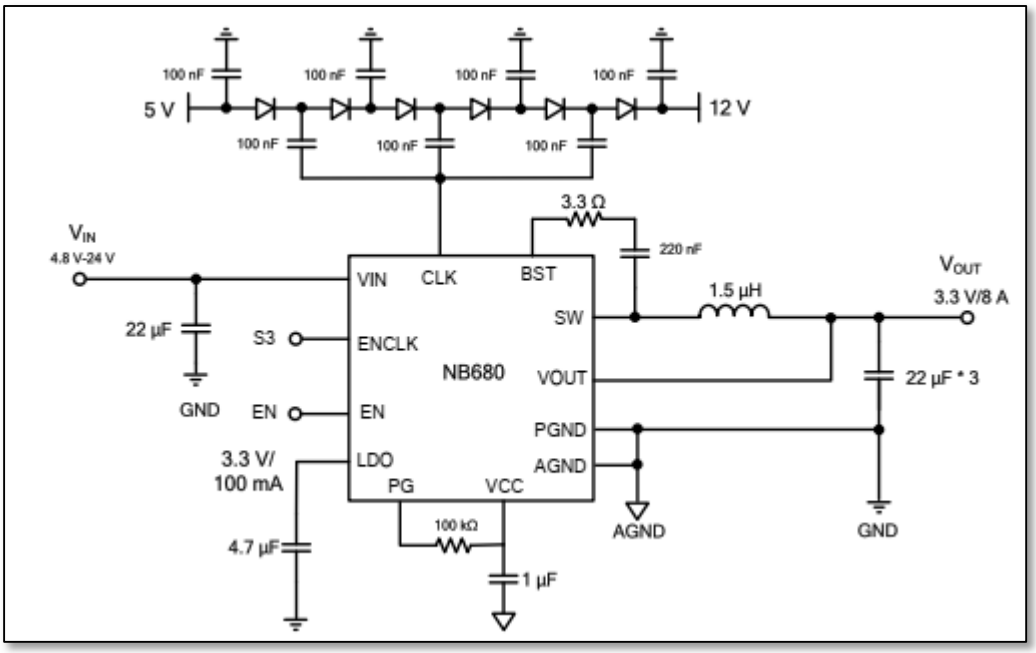

https://www.monolithicpower.com/en/documentview/productdocument/index/version/2/docume

nt_type/Datasheet/lang/en/sku/NB680/document_id/4031/ (as of August 25, 2025); Exhibit 5.

Features & Benefits

- ✓ Wide 4.8 V to 26 V Operating Input Range
- ✓ Fixed 3.3 V Vout
- ✓ Ultrasonic Mode with Fs over 25 kHz
- ✓ 100 µA Low Quiescent Current
- ✓ 8 A Continous Output Current
- ✓ 10 A Peak Output Current
- ✓ Adaptive COT for Fast Transient
- ✓ DC Auto-Tune Loop
- ✓ Stable with POSCAP and Ceramic Output Capacitors
- ✓ 250 kHz CLK for External Charge Pump
- ✓ Built-In 3.3 V, 100 mA LDO with Switch Over
- ✓ 1% Reference Voltage
- ✓ Internal Soft Start
- ✓ Output Discharge
- ✓ 700 kHZ Switching Frequency
- ✓ OCL, OVP, UVP, and Thermal Shutdown.
- ✓ Latch-Off Reset via EN or Power Cycle.
- ✓ QFN 2mm x 3mm Package

Show less ^

https://www.monolithicpower.com/en/nb680.html (As of August 25, 2025); Exhibit 5.

50. As evidenced on MPS's website for the webpage directed to the NB680, it states that the NB680 is a "*high frequency*, synchronous rectified, *switch-mode* converter having a wide input supply range with excellent load and line regulation." This satisfies the limitation, "a switching power supply which stabilizes the input voltage," as required by Claim 1.

> The NB680 is a fully integrated, high-frequency, synchronous, rectified, step-down, switch-mode converter with a fixed 3.3 V Vout. It offers a very compact solution to achieve an 8 A continuous output current and a 10 A peak output current over a wide input supply range with excellent load and line regulation.
> The NB680 operates at high efficiency over a wide output current load range based on MPS proprietary switching loss reduction technology and internal low Ron power MOSFETs.

https://www.monolithicpower.com/en/nb680.html (as of August 25, 2025), Exhibit 5.

51. Further, the datasheet for NB680 depicts a chart with electrical characteristics that indicates that there is a reference voltage source which generates a predetermined reference

Reference and soft start						
Vout REF voltage	$V_{OUT\ REF}$		3.27	3.3	3.33	V

voltage. Exhibit 5. This satisfies the limitation, "a reference voltage source which generates a predetermined reference voltage," as required by Claim 1.

https://www.monolithicpower.com/en/documentview/productdocument/index/version/2/document_type/Datasheet/lang/en/sku/NB680/document_id/4031/ at 4 (as of August 25, 2025); Exhibit 5.

This is further depicted in the description of PWM operation within the Datasheet:

OPERATION

PWM Operation

The NB680 is a fully integrated, synchronous, rectified, step-down, switch-mode converter with a fixed 3.3 V output. Constant-on-time (COT) control provides fast transient response and eases loop stabilization. At the beginning of each cycle, the high-side MOSFET (HS-FET) is turned on when the feedback voltage (V_{FB}) is below the reference voltage (V_{REF}), which indicates insufficient output voltage. The on period is determined by the output voltage and the input voltage to make the switching frequency fairly constant over the input voltage range.

https://www.monolithicpower.com/en/documentview/productdocument/index/version/2/document_type/Datasheet/lang/en/sku/NB680/document_id/4031/ at 12 (as of August 25, 2025); Exhibit 5.

Ultrasonic Mode (USM)

Ultrasonic mode (USM) keeps the switching frequency above an audible frequency area during light-load or no-load conditions. Once the part detects that both the HS-FET and the LS-FET are off (for about 32 µs), it shrinks the Ton to keep Vout under regulation with optimal efficiency. If the load continues to decrease, the part discharges Vout to make sure FB is less than 102 percent of the internal reference. The HS-FET turns on again once the internal FB reaches VREF and then stops switching.

USM is selected by the EN voltage level. When EN is in the range of 1.38 V to 1.8 V, it enters USM. If EN is in the range of 2.6 V to 3.6 V, it enters normal mode.

Id. at 12 (as of August 25, 2025); Exhibit 5.

Soft Start (SS)

The NB680 employs a soft-start (SS) mechanism to ensure smooth output during power-up. When EN goes high, the internal reference voltage ramps up gradually; hence, the output voltage ramps up smoothly as well. Once the reference voltage reaches the target value, the soft start finishes, and the part enters steady-state operation.

If the output is pre-biased to a certain voltage during start-up, the IC disables the switching of both the high-side and the low-side switches until the voltage on the internal reference exceeds the sensed output voltage at the internal FB node.

3.3 V Linear Regulator

There is a built-in 100 mA standby linear regulator with a fixed output at 3.3 V, controlled by VIN UVLO. Once Vin passes its UVLO, it is on. The 3.3 V LDO is not controlled by EN or ENCLK. This LDO is intended mainly for an auxiliary 3.3 V supply for the notebook system in standby mode.

Add a ceramic capacitor with a value between 4.7 µF and 22 uF placed close to the LDO pins to stabilize the LDOs.

52. *Id.* at 12 (as of August 25, 2025); Exhibit 5. Further, a linear regulator, which stabilizes the input voltage based on the reference voltage generated by the reference voltage source is described and depicted in the datasheet for NB680. This satisfies the limitation, "a linear regulator which stabilizes the input voltage, based on the reference voltage generated by the reference voltage source," as required by Claim 1.

9	VCC	**Internal VCC LDO output.** The driver and control circuits are powered from this voltage. Decouple with a minimum 1 µF ceramic capacitor as close to VCC as possible. X7R or X5R grade dielectric ceramic capacitors are recommended for their stable temperature characteristics.

https://www.monolithicpower.com/en/documentview/productdocument/index/version/2/document_type/Datasheet/lang/en/sku/NB680/document_id/4031/ at 6 (as of August 25, 2025); Exhibit 5.

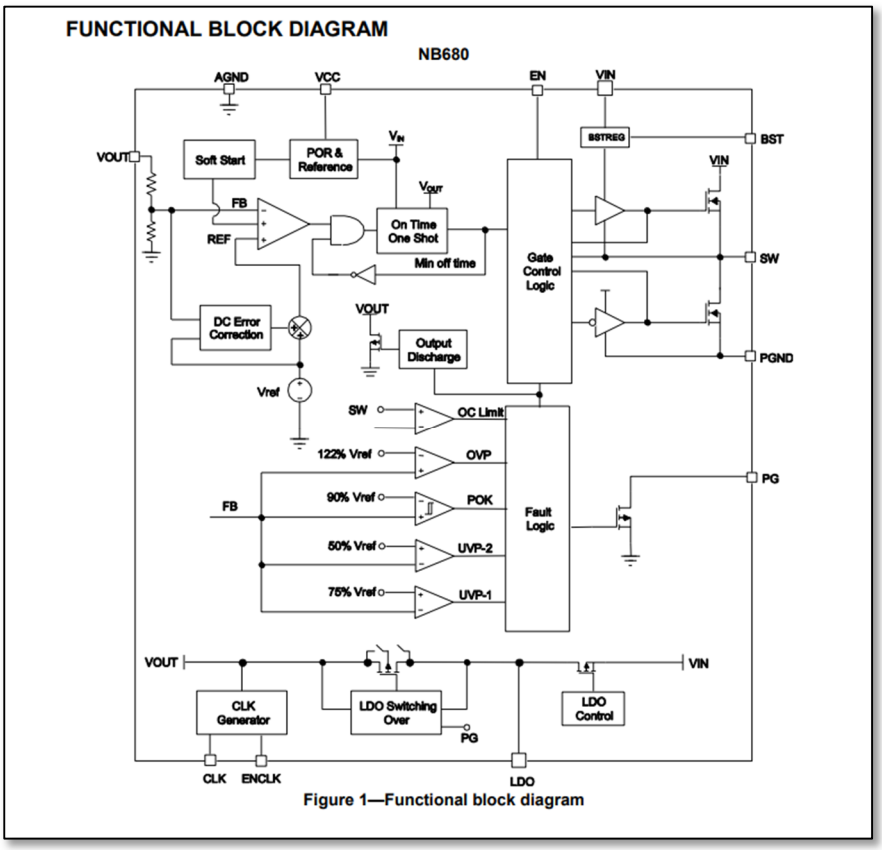

Figure 1—Functional block diagram

53. https://www.monolithicpower.com/en/documentview/productdocument/index/version/2/document_type/Datasheet/lang/en/sku/NB680/document_id/4031/ at 10 (as of August 25, 2025); Exhibit 5. The datasheet further depicts that the VCC is connected to the 'POR & Reference' block of the functional block diagram. Therefore, the output voltage of the linear regulator (VCC) is supplied as a power supply voltage of a controller (the circuit of Fig. 1) of the switching power supply and the reference voltage source ('POR & Reference' Block), and the input voltage is not directly supplied to the controller (the circuit of Fig. 1) as a power supply voltage. This satisfies the limitation, "an output voltage of the linear regulator is supplied as a power supply voltage of a controller of the switching power supply and the reference voltage source, and the input voltage is not directly supplied to the controller as a power supply voltage," as required by Claim 1.

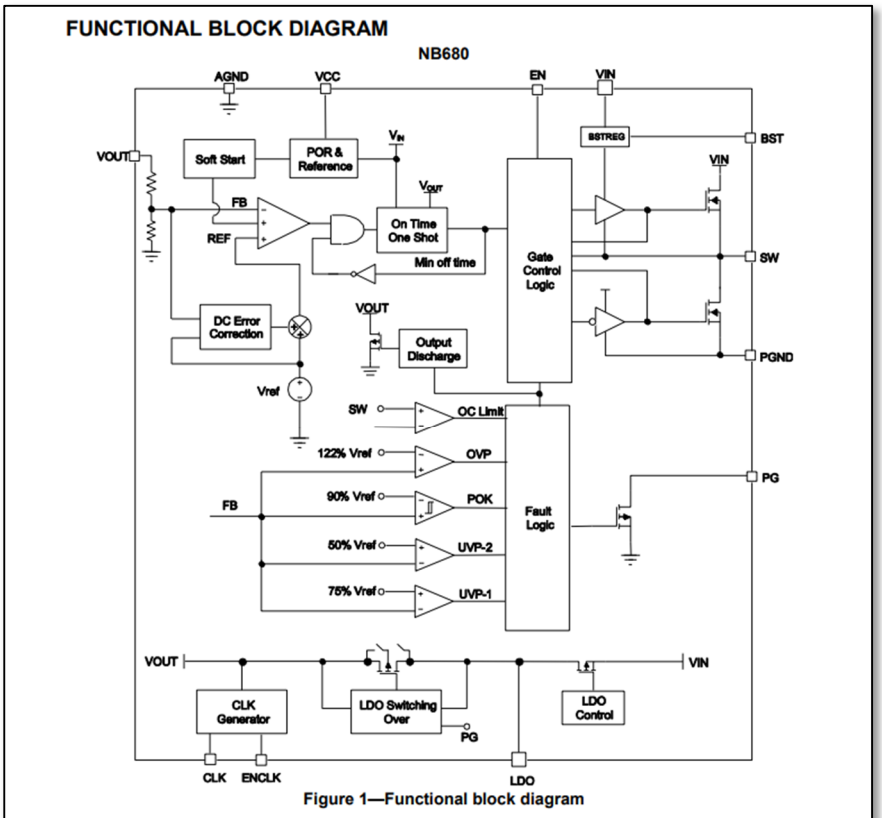

Figure 1—Functional block diagram

https://www.monolithicpower.com/en/documentview/productdocument/index/version/2/document_type/Datasheet/lang/en/sku/NB680/document_id/4031/ at 10 (as of August 25, 2025); Exhibit 5.

54. Upon information and belief, MPS designs and manufactures many different power management products that include a linear regulator to stabilize an input voltage using similar designs, many or all of which utilize the '955 Patent.

MPS'S TORTIOUS INTERFERENCE WITH REED'S BUSINESS RELATIONSHIPS

55. Reed, a leading provider of innovative products in the power management industry, has built a strong reputation for quality and reliability. Over the years, Reed has established a loyal customer and vendor base, which has been integral to its continued success and growth in the market. For example, Reed has established a significant business relationship with the company (hereinafter known as "Company A")—an outsourced semiconductor assembly and test partner ("OSAT")—to assemble, package, and test Reed's integrated circuit products. Reed has contracted with Company A for OSAT services for Reed's products for at least four-and-a-half years.

56. Recently, Reed has become aware of a series of communications initiated by MPS, a direct competitor to Reed, targeting Reed's customers and/or vendors, including Company A. These communications have been made through various channels, including emails and telephone calls. In these communications, MPS has alleged that products purchased by Reed's customers and/or products that Reed's vendors provide services for infringe patents owned by MPS. Although these patents are currently the subject of ongoing litigation in other jurisdictions, where MPS is asserting its claims against Reed, the products purchased by and/or the products that are serviced by Reed's customers and/or vendors ***are not accused of infringement in any lawsuit***.

57. On information and belief, MPS sales representatives targeted Company A and

falsely claimed to Company A's CEO that certain Reed products that Company A provides OSAT services for infringe U. S. patents owned by MPS. Although MPS is asserting patents against Reed in the United States, the Reed products that Company A provides OSAT services for are ***not*** accused of infringement. Thus, MPS's claims of patent infringement are objectively baseless because MPS has not accused these Reed products of infringing any patents. MPS also urged Company A not to do business with Reed on the basis of its false claims.

58. As a result of MPS's false claims in these communications, Company A expressed its "concerns" about the Reed products it provides OSAT services for being found to infringe U.S. patents.

59. MPS's statements were made to Company A in bad faith, and it is evident that MPS has orchestrated a campaign to interfere with Reed's business by attempting to convince Reed's customers not to sell or provide OSAT services for Reed's products.

60. MPS's false claims have caused Company A to reconsider its contractual business relationship with Reed, resulting in significant economic harm to Reed.

61. On information and belief, MPS made similar unjustified, unsupported, and objectively baseless claims to other Reed customers and/or vendors.

62. Customers and/or vendors, concerned about potential legal implications and the products they have purchased, have expressed hesitation in continuing their business relationships with Reed. By disseminating unsubstantiated claims of patent infringement, MPS has intentionally and unjustifiably interfered with Reed's contractual and prospective business relations.

MPS'S UNLAWFUL EXPORT OF PRODUCTS TO CHINA

63. MPS derives significant revenue from direct and indirect sales to customers in Asia, particularly in China. Exhibit 10, Monolithic Power Sys., Inc., Annual Report for the Year Ended December 31, 2021 (Form 10-K) (February 25, 2022), p. 13.

64. On information and belief, MPS has unlawfully exported products that infringe Reed's United States-developed intellectual property to companies in China in violation of U.S. export controls. On information and belief, MPS through other channels in China, including through re-branded entities Lattice Art Semiconductor Co., Ltd. and Gulf Semiconductor Limited, has been selling MPS products with MPS product numbers into China.

65. For the second quarter of 2025, according to the Form 10-Q Quarterly Report for MPS, MPS had quarterly revenue in China of $397,951,000 out of a total of $664,574,000, which is greater than 50% of its total revenue for the quarter. Additionally, MPS made 89% and 83% of its sales in the first six months of 2024 and 2025 through distribution agreements with third-party distributors and value-added resellers.

66. On the earnings call of August 1, 2024, Bernie Blegen, MPS EVP and Chief Financial Officer, stated when asked about revenue from China companies that could be in violation of U.S. export controls due to the U.S. government cancelling export licenses to China, Mr. Blegen noted that the revenue was on a "purchase order" basis and was not directly sold by MPS in violation of U.S. export controls. Mr. Blegen stated: "We don't have any licensing or contractual arrangements ….. So they can't be canceled. Any business we have with them has always just done on a PO basis, and we have no indication of a change in their relationship." Exhibit 11, *Earnings call: MPS surpasses Q2 expectations with record revenue* (Aug. 4, 2024), INVESTING.COM, https://www.investing.com/news/stock-market-news/earnings-call-mps-surpasses-q2-expectations-with-record-revenue-93CH-3553694 (last accessed August 27, 2025). This is not true.

67. MPS maintains significant R&D operations in China, with the following registered subsidiaries: MPS International (Shanghai) Ltd.; Chengdu Monolithic Power Systems Co., Ltd.;

MPS International Gk. Hangzhou; MPS Semiconductor Technology LTD. Exhibit 12, Monolithic Power Sys., Inc., Quarterly Report For the Quarter Ended June 30, 2025 (Form 10-Q) (Aug. 4, 2025), p. 17.

68. With long lived assets as noted in the 10-Q of $288,191,000 out of a total of $563,885,000, MPS maintains more than 50% of the value of these assets in China. This is a significant concentration of resources and R&D assets in China which is indicative of its efforts to export US technology into the China market.

69. Furthermore, earlier analyst reports from 2020 noted that MPS had obtained export licenses to sell directly to several Chinese companies. A report from Jaguar Analytics, dated December 16, 2020 by Jay Kunstman, noted that MPS was granted export licenses: "We believe MPS was granted this license because it supplies ….power components that effectively serve as building blocks for all sorts of applications, including networking, 4G and 5G infrastructure equipment, fiber optic communications equipment and consumer/wearable devices." Exhibit 13, Kunstman, J., *Monolithic Power Systems (MPWR) – Ramping to the Upside* (Dec. 16, 2020), JAGUARANALYTICS, https://www.jaguaranalytics.com/home-post/monolithic-power-systems-mpwr-ramping-to-the-upside/ (last accessed Aug. 27, 2025).

70. These facts directly contradict Bernie Blegen's statement on August 1, 2024, that MPS was not required to have any licenses to export into China during the earnings call. These prior analyst reports regarding export licenses being granted to MPS to sell into China in 2020 undermine Mr. Blegen's statement that no export licenses are required for MPS sales in China.

COUNT I: INFRINGEMENT OF THE U.S. PATENT NO. 7,960,955

71. Reed incorporates by reference and re-alleges all of the foregoing paragraphs of this Complaint and exhibits attached hereto as if fully set forth herein.

72. Reed is the owner of all right, title, and interest in and to the '955 Patent.

73. The ’955 Patent is presumed valid pursuant to 35 U.S.C. § 282.

74. The following allegations are based on publicly available information and a reasonable investigation of the structure and operation of the MPS Accused Products. Reed reserves the right to modify this description, including, for example, on the basis of information about the MPS Accused Products that it obtains during discovery.

75. MPS has directly infringed the ’955 Patent under 35 U.S.C. § 271(a). As alleged above, the MPS Accused Products meet each and every one of the claim limitations of at least one claim of the ’955 Patent.

76. As alleged above, MPS has infringed and continues to infringe at least one claim of the ’955 Patent by making, using, offering to sell, selling within the United States, and importing into the United States, MPS Accused Products. MPS’s infringement is and continues to be willful.

77. As alleged above, MPS has actively induced infringement under 35 U.S.C. § 271(b) of at least one claim of the ’955 Patent. Specifically, MPS understands, intends, and encourages its products to be incorporated into infringing downstream electronic products developed by MPS’s customers. MPS sells the MPS Accused Products to customers, either directly or indirectly, knowing and intending that the MPS Accused Products will be implemented in an infringing manner as described in MPS’s datasheets. In fact, MPS actively encourages such infringement by using its datasheets and other technical and marketing materials to inform downstream customers how to incorporate the MPS Accused Products in an infringing manner. MPS works directly with its customers to help them develop products that infringe with full knowledge of such infringement. MPS’s customers’ products are manufactured by contract manufacturers and then imported into the U.S. and/or sold throughout the U.S. by MPS’s downstream customers and their retailers.

78. As alleged above, MPS has actively contributed to infringement under 35 U.S.C. § 271(c) of at least one claim of the ’955 Patent, because the MPS Accused Products constitute a material part of the infringing functionality of the ’955 Patent and are knowingly made by MPS for use in an infringing downstream product. The MPS Accused Products are not a staple article or commodity of commerce suitable for substantial noninfringing use because the datasheets and other technical and marketing materials created by MPS for those products confirm that they must be implemented in a downstream device in an infringing manner. MPS’s customers’ products are manufactured by contract manufacturers and then imported into the U.S. and/or sold throughout the U.S. by MPS’s downstream customers and their retailers.

79. MPS’s infringement has damaged and continues to damage Reed in an amount yet to be determined, but constituting at least a reasonable royalty.

80. As a consequence of MPS’s infringement of the ’955 Patent, Reed has suffered and will continue to suffer irreparable harm and injury, for example, in the form of lost sales, lost profits, and loss of market share. Unless enjoined, MPS and/or others acting on behalf of MPS will continue their infringing acts, thereby causing additional irreparable injury to Reed for which there is no adequate remedy at law. Specifically, MPS’s actions will irreparably harm Reed’s position in the marketplace for power management products that include a linear regulator to stabilize the input voltage market by causing Reed to lose customers.

COUNT II: TORTIOUS INTERFERENCE WITH EXISTING BUSINESS RELATIONSHIPS

81. Reed incorporates by reference and re-alleges all of the foregoing paragraphs of this Complaint and exhibits attached hereto as if fully set forth herein.

82. Reed has valid contractual business relationships with many vendors to provide services for Reed and its products, including Company A.

83. Reed has valid contractual business relationships with many customers to purchase Reed's products.

84. MPS has knowledge of these contractual business relationships, including Reed's contractual relationship with Company A.

85. As set forth above, MPS intentionally and unjustifiably interfered with Reed's contractual business relationships by making false claims of patent infringement, including against Company A. Specifically, MPS has initiated multiple communications with several of Reed's customers and/or vendors, including Company A, by sending emails and placing telephone calls, alleging that these customers are purchasing products from Reed that infringe MPS's patents. These customers and/or vendors, including Company A, purchase products and/or provide services for products that are not accused of infringement by MPS in any lawsuit.

86. Upon information and belief, MPS's representatives urged Company A to not do business with Reed based on the false patent infringement claims alleged by MPS against Company A.

87. Company A representatives contacted Reed with "concerns" surrounding providing OSAT services for Reed's products, leading Company A to reconsider its contractual business relationship with Reed.

88. Reed has suffered significant economic harm as a result of MPS's targeted campaign against Reed's products that have never been alleged to infringe MPS's patents.

89. Other customers and/or vendors who have contracted with Reed have expressed concerns regarding the products they have purchased from Reed as a result of MPS's unlawful contact and interference.

90. MPS's unlawful actions were undertaken without any legal right or justifiable

excuse.

91. By performing these actions, MPS intended to harm Reed and interfere in its business relationships.

92. MPS's actions were motivated by malice.

93. MPS's actions were taken with the full knowledge and conscious disregard of the fact that the Reed products at issue do not infringe MPS's patents.

94. Upon information and belief, MPS acted in bad faith and with a conscious desire to prevent Reed's customers and/or vendors, including Company A, from purchasing and/or providing services for Reed's products and/or with the knowledge that Reed's customers and/or vendors were certain or substantially certain to refuse to purchase Reed's products as a result of MPS's conduct.

95. As a direct and proximate result of MPS's interference, Reed has suffered damages, including but not limited to lost profits, lost business opportunities, and harm to its goodwill and business reputation.

COUNT III: TORTIOUS INTERFERENCE WITH EXISTING CONTRACTS

96. Reed incorporates by reference and re-alleges all of the foregoing paragraphs of this Complaint and exhibits attached hereto as if fully set forth herein.

97. Reed has valid contractual business relationships with many vendors to provide services for Reed and its products, including Company A.

98. Reed has valid contractual business relationships with many customers to purchase Reed's products.

99. MPS has knowledge of these contractual business relationships, including Reed's contractual relationship with Company A.

100. As set forth above, MPS intentionally and unjustifiably interfered with Reed's

contractual business relationships by making false claims of patent infringement, including against Company A. Specifically, MPS has initiated multiple communications with several of Reed's customers and/or vendors, including Company A, by sending emails and placing telephone calls, alleging that these customers are purchasing products from Reed that infringe MPS's patents. These customers and/or vendors, including Company A, purchase products that are not accused of infringement by MPS in any lawsuit.

101. Upon information and belief, MPS's representatives urged Company A to not do business with Reed based on the false patent infringement claims alleged by MPS against Company A.

102. Company A representatives contacted Reed with "concerns" surrounding providing OSAT services for Reed's products, leading Company A to reconsider its contractual business relationship with Reed.

103. Reed has suffered significant economic harm as a result of MPS's targeted campaign against Reed's products that have never been alleged to infringe MPS's patents.

104. Other customers and/or vendors contracted with Reed have expressed concerns regarding the products they have purchased and/or provide services for from Reed as a result of MPS's unlawful contact and interference.

105. MPS's unlawful actions were undertaken without any legal right or justifiable excuse.

106. By performing these actions, MPS intended to harm Reed and interfere in its business relationships.

107. MPS's actions were motivated by malice.

108. MPS's actions were taken with the full knowledge and conscious disregard of the

fact that the Reed products at issue do not infringe MPS's patents.

109. Upon information and belief, MPS acted in bad faith and with a conscious desire to prevent Reed's customers and/or vendors, including Company A, from purchasing products and/or providing services for Reed's products with the knowledge that Reed's customers and/or vendors were certain or substantially certain to refuse to purchase Reed's products as a result of MPS's conduct.

110. As a direct and proximate result of MPS's interference, Reed has suffered damages, including but not limited to lost profits, lost business opportunities, and harm to its goodwill and business reputation.

DAMAGES

111. As a result of MPS's acts of infringement and other actions explained above, Reed has suffered and continues to suffer actual and consequential damages. However, Reed does not yet know the full extent of the infringement, and the amount of damages cannot be ascertained except through discovery and special accounting, including for all causes of actions explained above. To the fullest extent permitted by law, Reed seeks recovery of damages at least for reasonable royalties, lost profits, unjust enrichment, and benefits received by MPS as a result of using the patented technology and actual damages (but no less than a reasonable royalty), to Reed to compensate Reed for MPS's tortious interference with its business relationships and existing contracts. Reed further seeks any other damages to which Reed is entitled under law or in equity, including enhanced damages for MPS's willful infringement.

DEMAND FOR JURY TRIAL

112. Pursuant to Rule 38 of the Federal Rules of Civil Procedure, Reed hereby demands a jury trial for all issues so triable.

PRAYER FOR RELIEF

WHEREFORE, Reed respectfully requests that this Court enter judgment in its favor as follows:

A. That Judgment be entered that MPS has infringed and is infringing one or more claims of the ’955 Patent;

B. Declare that the infringing acts by MPS has caused irreparable harm to Reed and that continued infringing acts by MPS is likely to cause further irreparable harm to Reed;

C. Declare that the ’955 Patent is valid and enforceable;

D. That, in accordance with 35 U.S.C § 283, MPS and all its affiliates, employees, agents, officers, directors, attorneys, successors, and assigns and all those acting on behalf of or in active concert or participation with any of them, be preliminarily and permanently enjoined from (1) infringing the ’955 Patent and (2) making, using, selling, and offering for sale, or importing into the United States, and (3) exporting from the United States one or more components of, the MPS Accused Products, or to the extent not so enjoined, ordering Defendant to pay compulsory ongoing royalties for any continuing infringement of the ’955 Patent;

E. That MPS must account for, and pay actual damages (but no less than a reasonable royalty), to Reed to compensate Reed for Defendant’s infringement of the ’955 Patent;

F. That MPS is willfully infringing the ’955 Patent and ordering that MPS pay up to treble damages to Reed under 35 U.S.C. § 284 including an accounting of lost sales not presented at trial and an award of additional damages for any such lost sales;

G. That MPS must account for, and pay actual damages (but no less than a reasonable royalty), to Reed to compensate Reed for MPS’s tortious interference with its business relationships and existing contracts;

H. That the case be found exceptional under 35 U.S.C. § 285 and that Reed be awarded its reasonable attorneys' fees;

I. That Reed be awarded its costs, expenses, and interest, including prejudgment and post-judgment interest in this action, as provided by 35 U.S.C. § 284;

J. Such other and further relief as the Court may deem just and proper, or that Reed may be entitled to as a matter of law or equity.

Dated: September 30, 2025

Respectfully submitted,

/s/ *Rick L. Rambo*

Rick L. Rambo
Texas Bar No. 00791479
Avery Joseph Welker
Texas Bar No. 24137706
1000 Louisiana Street, Suite 4000
Houston, TX 77002-5005
Tel.: (713) 890-5000
Fax.: (713) 890-5001
Email: rick.rambo@morganlewis.com
Email: avery.welker@morganlewis.com

Andrew J. Gray IV (to be admitted *pro hac vice*)
California Bar No. 202137
1400 Page Mill Road
Palo Alto, CA 94304-1124
Tel.: (650) 843-4000
Email: andrew.gray@morganlewis.com

Jason C. White (to be admitted *pro hac vice*)
Illinois Bar No. 6238352
110 North Wacker Drive, Suite 2800
Chicago, IL 60606-1511
Tel.: (312) 324-1000
Fax.: (312) 324-1001
Email: jason.white@morganlewis.com

Tawni L. Henderson (to be admitted *pro hac vice*)
California Bar No. 352051
One Market, Spear Street Tower
San Francisco, CA 94105-1596
Tel.: (415) 442-1000
Fax.: (415) 442-1001
Email: tawni.henderson@morganlewis.com

MORGAN, LEWIS & BOCKIUS LLP
Attorneys for Plaintiff Reed Semiconductor Corp.