UNITED STATES PATENT AND TRADEMARK OFFICE

BEFORE THE PATENT TRIAL AND APPEAL BOARD

IMPERATIVE CARE, INC.,
Petitioner,

v.

INARI MEDICAL, INC.,
Patent Owner.

Case No. IPR2025-00728
U.S. Patent No. 11,844,921

SUPPLEMENTAL DECLARATION OF PAUL J. ZALESKY

TABLE OF CONTENTS

I. INTRODUCTION 1

II. BACKGROUND AND QUALIFICATIONS 3

III. BASES OF MY OPINION 8

A. Materials Considered 8

B. Relevant Legal Principles 9

IV. SUMMARY OF OPINIONS 12

V. THE ’921 PATENT 12

A. Overview 12

B. Prosecution History of the ’921 Patent 25

C. Cited References 27

1. Schaffer 27

2. Hartley 32

3. Eller 33

D. Person of Ordinary Skill in the Art 34

E. Claim Construction 35

1. Claim Language 37

2. Specification 38

3. Prosecution History 44

a. Schaffer 45

b. Wong 46

c. Kees 50

d. Williams 54

4. Extrinsic Evidence 57

5. Degrees of Flexibility 59

VI. GROUND 1—SCHAFFER DOES NOT ANTICIPATE CLAIMS 1-7, 9-10, 15-18, OR 20-24.....59

A. Schaffer Does Not Anticipate Dependent Claim 3 for the Additional Reason that Schaffer Does Not Disclose the "Filament Extend[ing] in a Loop."....69

B. Schaffer Does Not Anticipate Dependent Claim 10 for the Additional Reason that Schaffer Does Not Disclose the "Second Filament." 70

VII. GROUND 2—SCHAFFER DOES NOT RENDER OBVIOUS CLAIMS 1-7, 9-10, 15-18, OR 20-24 72

VIII. GROUNDS 3 AND 4—THE COMBINATION OF SCHAFFER AND HARTLEY OR ELLER DOES NOT RENDER OBVIOUS ANY OF CLAIMS 1-7, 9-10, 15-18, OR 20-24 74

A. Petitioner's Stated Motivations to Modify Schaffer in View of Hartley or Eller Are Based on an Incorrect Understanding of the Sealing Mechanism of Schaffer Which Is Designed to Eliminate Gaps With or Without Instruments Inserted Through the Valve.....76

B. Petitioner and Its Expert Assert that Schaffer's Valve Forms a Complete Seal and Prevents Leaks, Even When Instruments are Inserted Therethrough. 91

C. Petitioner's Proposed Substitution of Hartley's String or Eller's Wire Member for Schaffer's U-Shaped Actuating Members is Not a Simple Substitution of One Known Element for Another. 91

D. Modifying or Substituting Hartley's String or Eller's Wire Member for Schaffer's U-Shaped Actuating Members Would Render Schaffer's Valve Inoperable for Its Intended Purposes of Durability and Easy Manufacturing.....105

E. Modifying or Substituting Hartley's String or Eller's Wire Member for Schaffer's U-Shaped Actuating Members Would

Change the Principle of Operation of Schaffer's Valve in Which the U-Shaped Actuating Members Forcibly Disengage the Seal Module and Likely Render Schaffer's Valve Inoperable. 112

F. Even Assuming Petitioner's Stated Motivations to Form a Better Seal and Avoid the Formation of Gaps, Petitioner Does Not Explain Why a POSITA Would Have been Motivated to Substitute Hartley's String or Eller's Wire Member for Schaffer's U-Shaped Members as Opposed to Any of the Alternatives It Provides 115

G. Altogether a POSITA Would Not Have Been Motivated to Substitute Hartley's String or Eller's Wire Member for Schaffer's U-Shaped Members 119

H. The Combination of Schaffer and Hartley or Eller Does not Render Obvious Dependent Claim 10 121

IX. GROUND 5: THE COMBINATION OF HARTLEY AND ELLER DOES NOT RENDER CLAIMS 1-3, 5-6, 9-10, 15-18, and 21-24 OBVIOUS 126

A. Modifying Hartley to Include Eller's Torsion Spring Would Render Hartley's Valve Inoperable for Its Intended Purpose 128

B. Petitioner's Stated Motivations to Modify Hartley to Include Eller's Torsion Spring Would Not Have Been Compelling to a POSITA Considering the Countervailing Advantages of Hartley's Device 133

X. SECONDARY CONSIDERATIONS 137

XI. CONCLUSION 137

I, **Paul J. Zalesky,** declare as follows:

I. INTRODUCTION

1. I have been retained by counsel for Patent Owner Inari Medical, Inc. ("Patent Owner" or "Inari") as an independent expert consultant in this proceeding in connection with *inter partes* review (IPR) proceeding IPR 2025-00728 concerning U.S. Patent 11,844,921 ("the '921 Patent"; EX1001), pending before the U.S. Patent and Trademark Office, Patent Trial and Appeal Board ("Board").

2. I understand that Imperative Care, Inc. ("Petitioner" or "Imperative") has filed a petition of *inter partes* review before the Board asserting:

   Ground 1: Claims 1-7, 9-10, 15-18, and 20-24 of the '921 Patent are unpatentable under 35 U.S.C. § 102 as anticipated by U.S. Patent Application Publication No. 2003/0225379 to Schaffer et al. ("Schaffer");

   Ground 2: Claims 1-7, 9-10, 15-18, and 20-24 of the '921 Patent are unpatentable under 35 U.S.C. § 103 as obvious over Schaffer;

   Ground 3: Claims 1-7, 9-10, 15-18, and 20-24 of the '921 Patent are unpatentable under 35 U.S.C. § 103 as obvious over Schaffer in combination with U.S. Patent Publication No. 2003/0116731 to Hartley ("Hartley");

Ground 4: Claims 1-7, 9-10, 15-18, and 20-24 of the '921 Patent are unpatentable under 35 U.S.C. § 103 as obvious over Schaffer in combination U.S. Patent No. 9,980,813 to Eller ("Eller"); and

Ground 5: Claims 1-3, 5-6, 9-10, 15-18, and 21-24 of the '921 Patent are unpatentable under 35 U.S.C. § 103 as obvious over Hartley in combination with Eller.

I have been asked by counsel for Inari Medical, Inc. ("Inari" or "Patent Owner") to opine on the patentability of the Claims of the '921 patent and, in particular, the patentability of the Claims with respect to grounds 1-5.

3. Along with my years of education, research, and experience, my opinions are based on investigation and study of relevant materials. The materials that I evaluated in support of this Declaration include all exhibits cited in this Declaration and in the Petition.

4. I may rely upon these materials, my knowledge and experience, and/or additional materials to rebut arguments raised by Petitioner. Further, I may also consider additional documents and information in forming any necessary opinions, including documents that may not yet have been provided to me.

5. My analysis of the materials produced in this matter is ongoing, and I will continue to review any new material as it is provided. This Declaration represents only those opinions I have formed to date. I reserve the right to revise,

supplement, and/or amend my opinions stated herein based on new information and on my continuing analysis of the materials already provided.

6. My work in this case is being billed at my normal hourly consulting rate, with reimbursement for actual expenses. My compensation is not related to the outcome of this proceeding. I have no personal interest in the outcome of the case.

II. BACKGROUND AND QUALIFICATIONS

7. My qualifications for forming the opinions set forth in this Declaration are summarized here and explained in more detail in my attached curriculum vitae.

8. I received my Ph.D. in Biomedical Engineering from the University of Michigan. My doctoral research focused on the prediction of optimal surgical timing for the repair of congenital heart defects. I received an undergraduate degree in Aerospace Engineering from the University of Notre Dame. I also received a Master of Science in Aerospace Engineering from the University of Michigan.

9. My industrial career has been focused on the development and commercialization of specialty medical devices for the diagnosis and treatment of heart disease, encompassing more than 30 years of management/engineering positions in both large and small companies. As outlined below, I have been

directly involved with the development and clinical use of various interventional catheters and devices, all requiring the insertion and use of a hemostatic valve to minimize or prevent back bleeding.

10. Following the initiation of "interventional" cardiology by Dr. Andreas Gruntzig in the late 1970s, when he pioneered coronary balloon angioplasty, the 1980s saw the evolution of less invasive treatments of cardiovascular disease. Today, those treatments are generally referred to as interventional cardiology or radiology. Early on, I became directly involved in the development of devices associated with interventional cardiology and related cardiovascular disciplines. Such devices range from simple, diagnostic catheters to complex electromechanical systems used for cardiovascular disease and associated issues, including thrombosis. In 1986, I led Boston Scientific's entry into the coronary angioplasty (PTCA) market as the Director of R&D, presenting device efficacy data to the FDA Panel towards a soon-approved Pre-Market Application (PMA). In that role I also supervised the development of guide catheters and guidewires needed as accessories to the diagnosis and treatment of cardiovascular disorders.

11. In 1986, I co-founded InterTherapy with cardiologist Dr. Walt Henry. InterTherapy was focused on the development of intravascular ultrasound for assessment of coronary and peripheral vascular disease that directed subsequent

therapy. The disposable component of the product was a 5 French catheter with design and materials that enabled its passage through standard guide catheters into the branches of the coronary artery or peripheral arteries. From 1986 through 1990 I managed all company operations, with emphasis on device use in the cardiac catheterization and special procedure labs of center-of-excellence hospitals.

12. I recruited, and worked closely with, Dr. Martin Leon, then a Fellow at the National Institutes of Health, and collaborated with Dr. Leon on the creation of a new, interventional cardiology symposium, Transcatheter Cardiovascular Therapeutics, which subsequently evolved into the largest and most comprehensive symposium in the field of interventional cardiology. I also collaborated closely with cardiologists, vascular and cardiac surgeons, and interventional radiologists from multiple U.S. and European Centers of Excellence, including the Mayo Clinic, Mass General Hospital, UCLA, Rhode Island Hospital, Emory University, Stanford University, Clinico Cardiologica in Milan, Italy, and many others. In this, and subsequent professional positions, I participated in hundreds of patient cases in the cardiac catheterization lab and operating room, donning protective lead aprons and masks while assisting or observing patient cases. The InterTherapy technology effectively enabled the development and evolution of coronary and peripheral vascular stents, as the

real time, intravascular imaging enabled review and optimization of treatment with specialized catheters or stents.

13. In the early 1990s I served as a VP R&D for a division of Baxter International, where I led the development of and presented the corporation's interventional cardiology and cardiopulmonary bypass product portfolio to cardiologists and surgeons and associated symposia, including the development of critical devices for treatment of cardiovascular disease.

14. In 1995 I co-founded, with cardiologist Dr. J. Richard Spears, TherOx. TherOx was focused on the development of oxygen supersaturated solutions to the coronary artery, following acute myocardial infarction (heart attack). The primary product included a sub-selective catheter that could access distal segments of the coronary branches, for fluid delivery. By sub-selective, I mean a catheter that can be placed into and advanced through a larger catheter, sometimes referred to as a "mother-and-child" catheter configuration.

15. In the 1995-2005 time period, myriad guide catheter configurations were developed and tested by many different companies, including multi-hardness bodies, multi-flexibility properties, various tip geometries and materials, and various lumen geometries. Simultaneously, variations on angioplasty, thrombectomy, atherectomy, and other devices were developed and tested, including catheters with active energy capability for lesion (disease) ablation or

removal, miniature balloons on wires, and selective pharmacologic infusions. I was directly involved with physician use and assessment of these and related devices while directing and participating in formal clinical studies in the U.S., Europe, Canada, and Israel.

16. During my time with Volcano Corporation (now Philips) I supervised coronary and peripheral artery catheter development, manufacture, and clinical use.

17. Since 2013, I have focused on consulting and have provided expert advice or opinion on numerous projects, including such areas as algorithms for cardiac arrhythmia diagnosis, implantable cardiac defibrillators, blood oxygen diagnostic devices, and cardiovascular devices and processes associated with vascular disease or obstruction treatment. For 1½ years, I served as interim CEO for Keystone Medical, an Israel-based start-up for the development of cerebral protection devices for use with transcatheter heart valve replacement. Our product development activities included cardiac delivery catheters, guidewires, and associated catheterization lab procedures for device insertion, deployment, use, and removal.

18. In many of my management positions, I was responsible for development and maintenance of intellectual property, including both direct management of in-house patent counsel and collaboration with outside patent counsel. I am a

named co-inventor on more than 20 issued U.S. patents, almost all focused on cardiovascular, coronary artery devices.

19. I have devoted most of my 35-plus years in product development to diagnosis and treatment of cardiovascular disease. Multiple experiences provided me with keen insights into the various aspects of heart disease, the optimized use of least invasive therapies, and the underlying pathophysiology of cardiovascular disease. I observed or participated in several hundred patient cases in the special procedure labs across the U.S. and Europe. I co-pioneered Intravascular Ultrasound, utilized to characterize vascular disease, guide treatment, and confirm therapeutic efficacy via complete stent deployment or other treatment at the lesion site. I co-pioneered the use of Aqueous Oxygen in patients with acute myocardial infarctions (heart attacks), providing resuscitation of ischemic, stunned or damaged cardiac muscle. Both of these technologies are currently part of the interventional cardiologist armamentarium for heart disease diagnosis and treatment.

III. BASES OF MY OPINION

A. Materials Considered

20. The opinions included in this Declaration are based on the documents I reviewed, my professional judgment, and my education and experience.

21. In forming my opinion expressed in this Declaration, I reviewed all the materials listed in the attachment hereto, and any other material I refer to in this Declaration in support of my opinion.

B. Relevant Legal Principles

22. I am not an attorney, but in preparing and forming my opinions, I have been informed of certain legal principles. I have applied my understanding of those principles and taken them into account when forming the opinions I describe. My understanding of the relevant legal principles is summarized below.

23. I understand that claim terms are generally given their ordinary and customary meaning as understood by a person of ordinary skill in the art at the time of the invention when read in the context of the specification and prosecution history unless a patentee sets out a different definition or clearly disavows claim scope.

24. I further understand that extrinsic evidence such as expert and inventor testimony, dictionaries, and learned treatises can help determine the meaning of claim terms, although that evidence is less significant than the claims, specification, and prosecution history.

25. I have been informed that Imperative bears the burden of proving unpatentability by a preponderance of evidence. I have been told that this means that Imperative must prove that it is more likely than not that the Claims of the

’921 patent are anticipated by Schaffer, obvious over Schaffer, obvious over the combination of Schaffer and Hartley, obvious over the combination of Schaffer and Eller, or obvious over the combination of Hartley and Eller.

26. I understand that my opinions regarding patentability are from the viewpoint of a person having ordinary skill in the field of the technology of the patent as of the time of the invention. For the purposes of this Declaration, I have assumed that date is the earliest priority date of the ’921 Patent which is September 6, 2017. Petitioner also applies September 6, 2017, as the priority date for the ’921 Patent. Petition, p. 16.

27. I understand that for a patent claim to be anticipated, each claim limitation must be present in a single piece of prior art. It is my understanding from counsel that a prior art reference anticipates a claimed invention if the prior art reference disclosed each of the claimed limitations of the invention either expressly or inherently.

28. I understand that if the differences between the claimed invention and the prior art are such that the claimed invention as a whole would have been obvious before the effective filing date of the claimed invention to a person having ordinary skill in the art to which the claimed invention pertains, the claimed invention is obvious.

29. I understand there are four fact-based inquiries involved in determining patent obviousness. These include: (1) the scope and content of the prior art; (2) the differences between the claimed invention and the prior art; (3) the level of ordinary skill in the art; and (4) objective indicia of non-obviousness. I have been informed that examples of objective indicia include unexpected results, commercial success of the invention, whether the invention satisfied a long felt need in the industry, failure of others to find a solution to the problem at hand, commercial acquiescence via licensing, professional approval, unexpected results, and copying and praise by infringers.

30. I understand that even if all limitations of a claimed invention are disclosed by the prior art combination, the patent challenger must demonstrate an apparent reason to combine the known elements in the fashion of the patent claim at issue and that a person of ordinary skill in the art would have reasonable expectation of success in pursuing that combination.

31. I understand that a prior art reference teaches away from a modification of a prior art reference when a person of ordinary skill in the art would be discouraged from following the path set out in the reference, or would be led in a direction divergent from the path followed by and claimed in the patent.

IV. SUMMARY OF OPINIONS

32. For the reasons I discuss below, I believe that the challenged Claims 1-7, 9-10, 15-19, and 20-24 of the ’921 Patent are not anticipated by Schaffer or rendered obvious by any combination of the prior art asserted in the Petition.

V. THE ’921 PATENT

A. Overview

33. The ’921 Patent explains that while “traditional hemostasis valves are greatly beneficial for intravascular access, they have some drawbacks. For example, some valves may not seal adequately for all interventional applications or tools, and/or the operation of some valves may be complicated for operator use.” EX1001, 1:45-49. The ’921 Patent addresses those drawbacks by providing a hemostasis valve (i.e., a valve that inhibits or prevents blood from flowing through valve) that provides for easy one-handed operation and strong sealing around a variety of different sized instruments, both of which are particularly important for hemostasis valves for use with thrombectomy systems, an embodiment of the ’921 patent. *Id.* at 16:1-25 (incorporating by reference, e.g., U.S. Patent Application 15/498,320, which published as US2018/0193043 (EX2027) and issued as U.S. Patent No. 10,098,651). These features are important to treating physicians and critical to patient health. For example, without a strong and complete seal, patients will quickly

lose blood through the valve endangering the patient, especially during thrombectomy procedures using large-bore catheters and vacuum aspiration.

34. Specifically, the ’921 Patent discloses that “[t]he present disclosure relates to a valve that can be used [as] a hemostasis valve.” EX1001, 5:49-50. This valve, also referred to in the ’921 Patent as a garrote valve, can seal with or without a tool extending through the valve. *Id*. at 5:50-52. I understand that the ’921 Patent used the term “garrote valve” to evoke the mechanism and action of the valve in which one or more filaments are pulled tightly around a flexible tubular member to seal the flexible tubular member.

35. The design and functionality of this hemostasis valve enables medical professionals to operate the valve with one hand while maintaining a robust seal to prevent blood loss during procedures. *Id*. at 5:52-63. Specifically, the design enables such ease of use while maintaining an effective and strong seal under the high-pressure differential caused by vacuum aspiration during aspiration thrombectomy procedures. *Id*. at 1:58-2:7, 5:11-16, 5:61-67, & 16:1-25. This type of valve, because of its strong seal and ability to minimize patient blood loss, is particularly well-suited for medical procedures involving the use of large-bore catheters in large veins and pulmonary arteries, such as for treating deep vein thrombosis or pulmonary embolism, where the risk of blood loss is generally greater and the need for a tight valve is critical.

36. When utilizing the garrote valve in a thrombectomy procedure, for example, the garrote valve can be coupled to a proximal end of a catheter and used to seal a lumen of the catheter and maintain hemostasis (i.e., inhibit or prevent blood flow from the catheter through the valve) when an instrument (e.g., catheter, wire, embolectomy system) extends through the garrote valve and the lumen of the catheter, and when no instruments extend through the garrote valve. *Id*. at 5:50-61 & 6:19-28. The garrote valve provides for convenient single-handed operation to open and close the garrote valve while also providing robust sealing with or without an instrument inserted therethrough during various catheter operations, such as vacuum aspiration of the catheter. *Id*. at 5:52-67.

37. In an embodiment, the ’921 Patent discloses a garrote valve that includes a housing 128 defining an interior channel 130 and an elongate/tubular member 132 extending through the interior channel 130. *Id*. at 7:4-8. The elongate member 132 defines a lumen 138, and can comprise a compliant tubular structure that facilitates collapse and sealing of the elongate member 132:

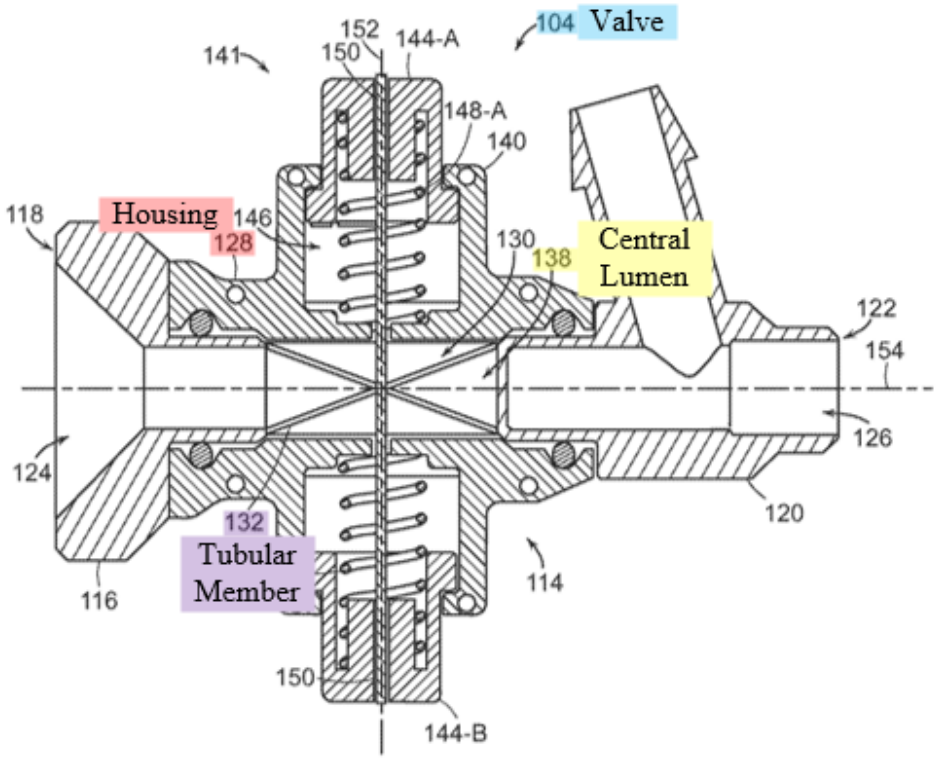

FIG. 2

Id. at 7:8-16.

38. The garrote valve further includes a constricting mechanism 141 or garrote that can collapse and seal the elongate member 132 via constriction with at least one filament 150 that can extend at least partially around the tubular member 132. *Id*. at 7:65-8:5. Specifically, the constricting mechanism 141 can comprise an actuator 142 "which can be a manual actuator such as one or several buttons 144" (a first button 144-A and second button 144-B), and the at least one filament 150 can be coupled to the actuator 142 such that the filament 150 selectively constricts, collapses, and/or seals the elongate member

132 (the lumen 138 of the elongate member 132) based on the movement and/or position of the actuator 142:

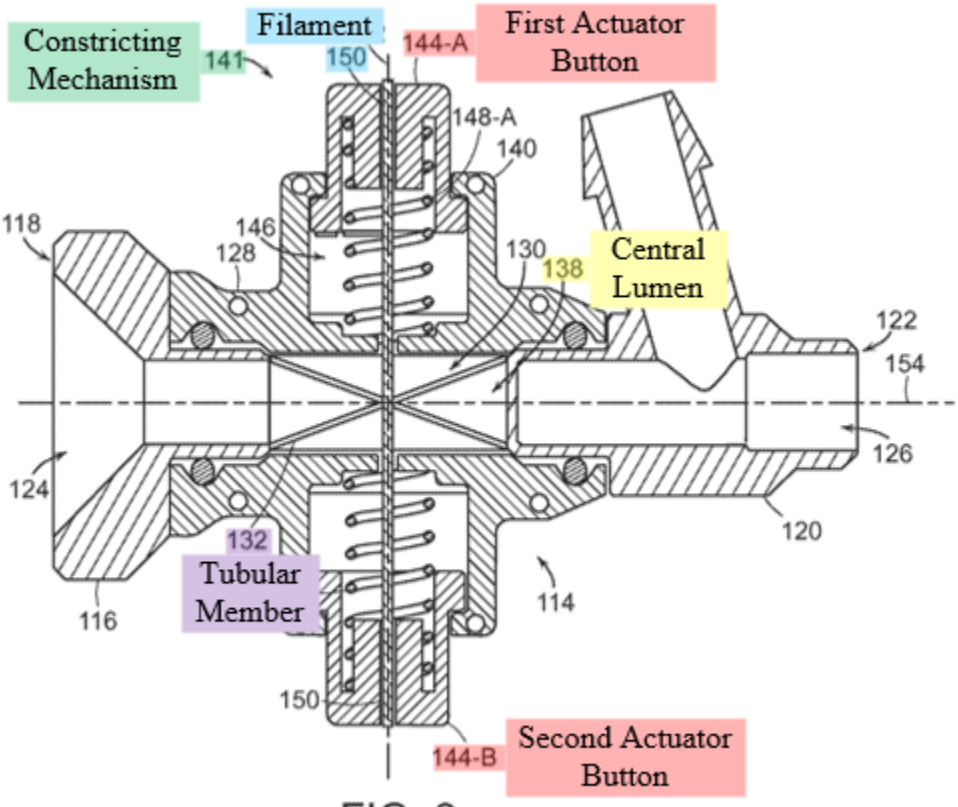

FIG. 2

Id. at 8:1-9 & 9:18-22.

39. The garrote valve also includes a bias feature 146 configured to bias the actuator 142 toward a first (closed) configuration of the garrote valve shown in Figure 2 wherein the elongate member 132 is "collapsed and/or sealed," such as a first spring 148-A configured to bias the first button 144-A and a second spring 148-B configured to bias the second button:

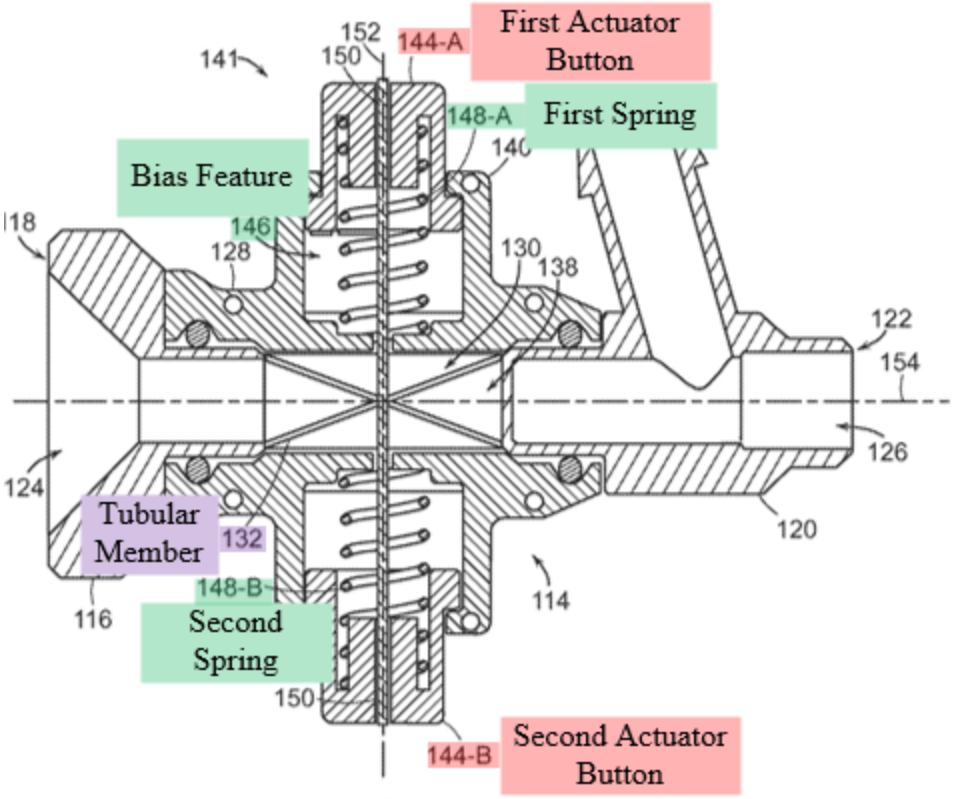

FIG. 2

Id. at 8:32-50. The actuator 142 can be actuated to move the garrote valve to a second (open) configuration shown in Figure 3 wherein the elongate member 132 is expanded and the lumen 138 of the elongate member 132 is unsealed:

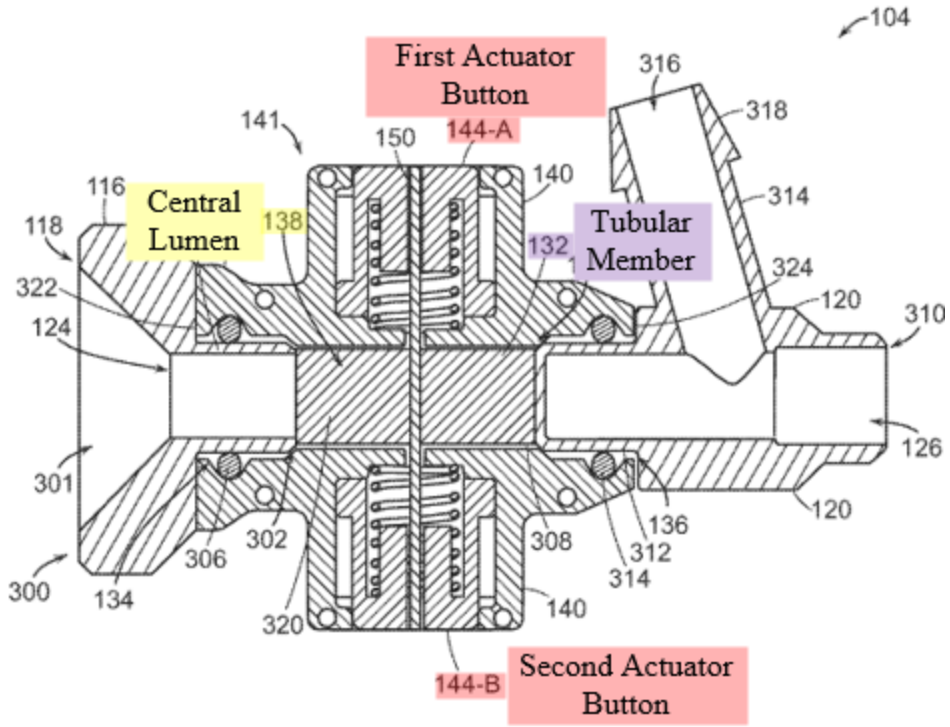

FIG. 3

Id. at 9:48-56. For example, the first and second buttons 144-A, 144-B can be depressed against the first and second biasing members 148-A, 148-B, respectively, in the second configuration. *Id*. In this position, the filament 150 is loosened, thereby allowing the expansion of the elongate member 132 and the unsealing of the lumen 138 thereof. *Id*. This arrangement of the constricting mechanism 141 can facilitate sealing of the garrote valve around tools or instruments of a wide range of sizes and/or diameters that fit through the elongate member 132. *Id*. at 8:5-9.

40. The filament 150 can be made from various materials, including a polymer, a synthetic, a metal, nylon, stainless steel, nitinol, silicone, or the like. *Id*. at

9:7-10. The filament 150 can comprise a single strand or a plurality of strands, and therefore can comprise one or several threads, lines, cords, rope, ribbon, flat wire, sheet, or tape. *Id*. at 9:10-17.

41. The filament 150 can have different configurations as shown in Figures 6-9 of the '921 Patent, including loop or bight embodiments. For example, as shown in Figure 6 (a loop embodiment), the filament 150 can be configured to form a single loop 604 that extends around the elongate member 132:

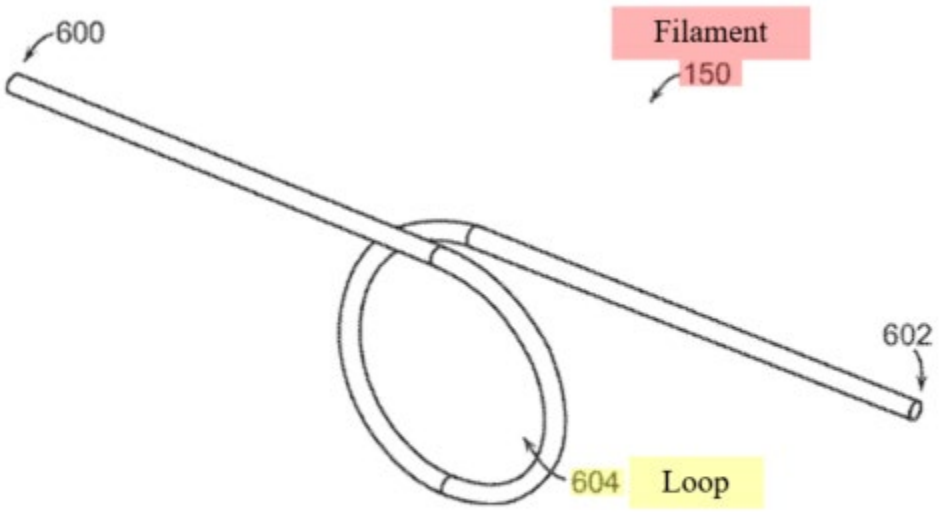

FIG. 6

Id. at 13:10-14. For example, as shown in Figure 7 (also a loop embodiment), the filament 150 can comprise a first filament 150-A and a second filament 150-B that each form an individual loop—a first loop 704 and a second loop 706, respectively—around the elongate member 132:

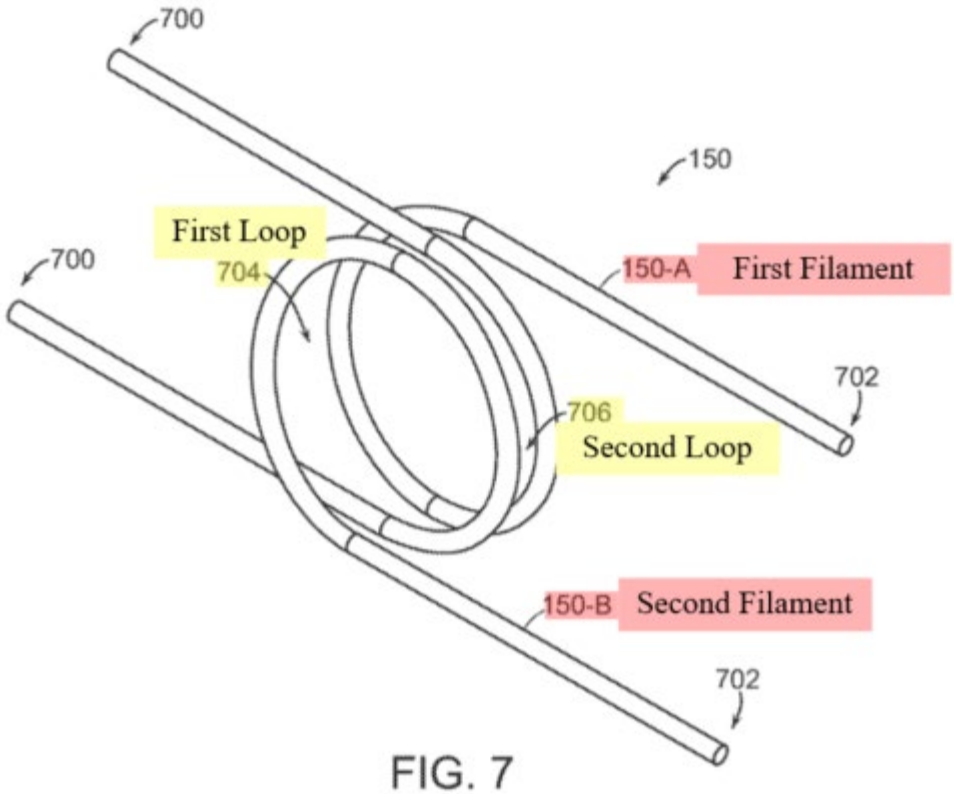

FIG. 7

Id. at 13:10-19.

42. For the filament loop embodiments shown in Figures 6 and 7, the constricting mechanism 141 acts to decrease a diameter or size of the loop 604 (Figure 6) or the first and second loops (Figure 7) when the constricting mechanism 141 is moved from the second (open) configuration to the first (closed configuration) as shown in Figures 2 and 3. *Id*. at 13:19-22. To do this, a POSITA would understand that the filament must have sufficient flexibility such that the loop can change size to conform to various shapes and sizes when transitioning between the first and second configurations.

43. As shown in Figures 8 and 9, in bight embodiments of the '921 Patent the filament 150 can be formed into a single bight or multiple bights. *Id*. at 13:23-25. The '921 Patent specifies that in contrast to a loop, the term "'bight' refers to a U-shaped section between the two ends of the filament 150." *Id*. At 13:25-26. Figures 8 and 9 show the first and second filaments 150-A and 150-B each forming an individual U-shaped bight—a first bight 800-A and a second bight 800-B, respectively:

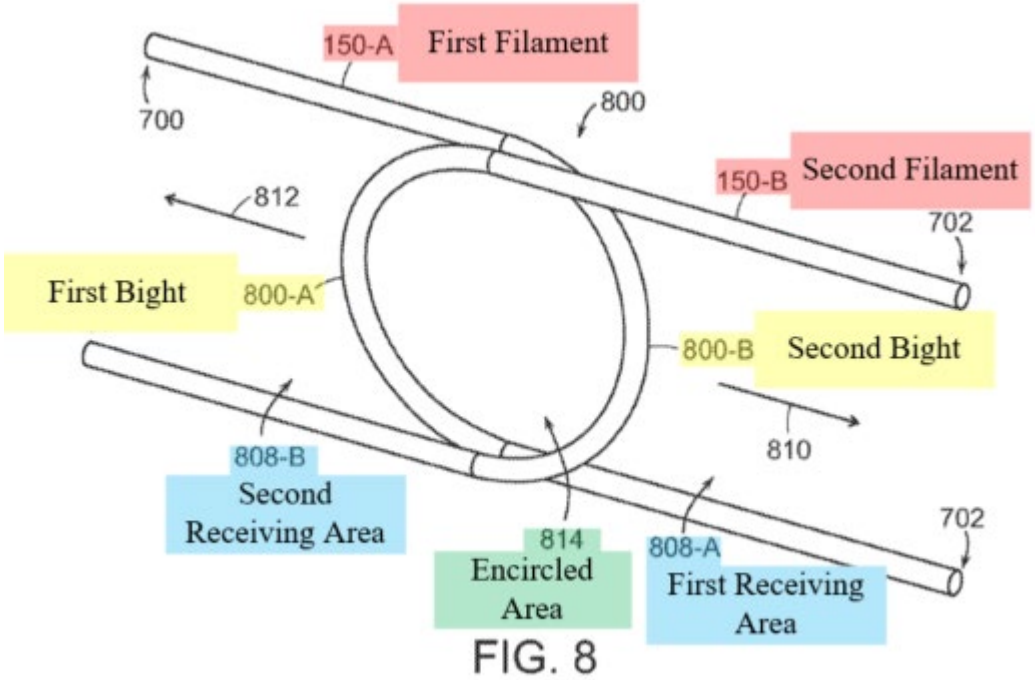

FIG. 8

Id. at 13:27-29.

44. As shown above, for the filament bight embodiments shown in Figures 8 and 9, the first and second bights 800-A and 800-B each define a partially enclosed receiving area 808—a first receiving area 800-A and a second receiving area

800-B, respectively, for receiving the elongate member 132. *Id*. at 13:40-44. As further shown above, the first and second receiving areas 808-A and 808-B overlap to define a constricting area 814. *Id*. at 13:50-54. The movement of the constricting mechanism 141 to the first (closed) configuration moves the bights 800-A, 800-B to decrease the size of the encircled area 814 and constrict, collapse, and/or seal the elongate member 132 extending through the encircled area 814, as shown in Figure 9:

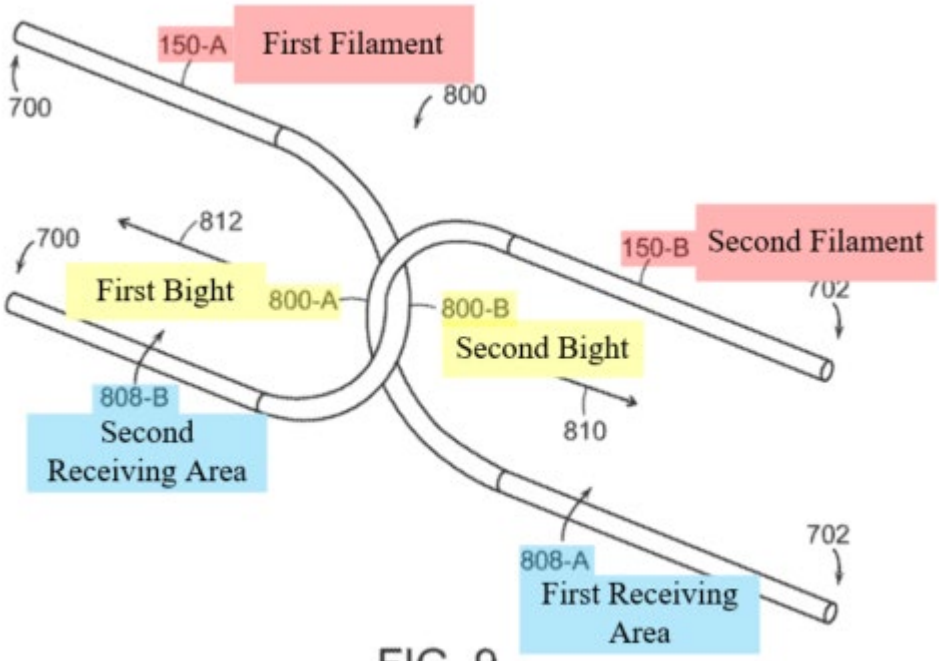

FIG. 9

Id. At 13:57-65. Movement of the constricting mechanism 141 from the first (closed) configuration to the second (open) configuration loosens (e.g., reduces a tension) in the first and second filaments 150-A, 150-B such that the first and second bights 800-A, 800-B slacken to allow the elongate member

132 to expand and unseal the lumen 138 of the elongate member 132. *Id*. at 14:54-60.

45. As I note above, the easy one-handed operation and strong seal of the garrote valve is particularly useful in thrombectomy procedures. Figure 11 of the '921 Patent discloses one example of a thrombectomy system 1100 including a thrombus extraction device 1102 inserted through the garrote valve 104 and a coupled aspiration catheter 102 and that is used to treat and/or extract a thrombus 1106 from the blood vessel 1104:

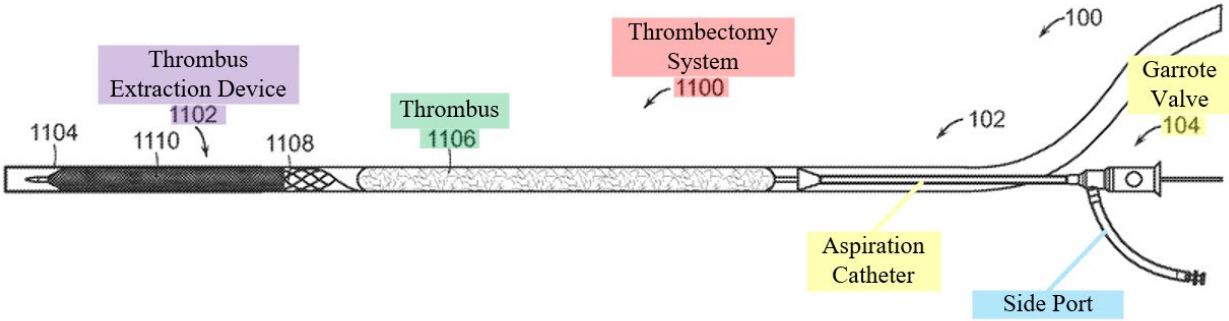

FIG. 11

Id. at 16:1-25. The aspiration catheter 102 is fluidly coupled to a side port that is used to apply a vacuum to the aspiration catheter 102 to aspirate clot material therethrough. *Id*. at 10:39-49. The garrote valve 104 is particularly useful in such thrombectomy procedures to provide for convenient single-handed access to the lumen of the aspiration catheter 102 while also providing robust sealing with or without the thrombus extraction device 1102 inserted

therethrough during vacuum aspiration of the aspiration catheter 102 via the side port. *Id*. at 5:52-67. More particularly, the garrote valve 104 provides robust sealing and easy access to the aspiration catheter 102 when the aspiration catheter 102 is a large-bore catheter such that blood loss is a significant concern during a thrombectomy procedure.

46. For example, the aspiration catheter 102 can have an outer diameter of at "at least 18 French, at least 20 French, at least 22 French." *Id*. at 6:34-40. Sealing a large-bore catheter is particularly challenging because of the large lumen size and the additional polymer material inherent to the larger catheter, requiring additional and focused material collapse/compression. A garrote valve that essentially "cinches" at a particular point is necessarily more effective in this setting than alternative valve configurations imposing diffuse sealing force. Thus, a POSITA would understand, for example, the garrote valve to be particularly useful in thrombectomy procedures using large-bore catheters to apply significant vacuum pressure, such as thrombectomy procedures used to treat pulmonary embolism or deep vein thrombosis.

47. Overall, the garrote valve's design prioritizes user control, allowing for single-handed operation while maintaining the integrity of the catheter system, including in the face of significant pressure differentials applied during aspiration thrombectomy procedures. In particular, the design allows for quicker

and more effective sealing of large-bore catheters used for aspiration thrombectomy in large veins and pulmonary arteries, such as for treating deep vein thrombosis or pulmonary embolism. These features are important to treating physicians and critical to patient health. A robust seal and quick, self-closing valve are critical to reduce patient blood loss which can be significant through a large catheter. Traditional rotating hemostasis valves take many turns to seal the larger bore catheters used in such procedures. The incorporation of bias features and springs ensures that the actuator can quickly and easily function effectively, providing a reliable and efficient means of achieving hemostasis.

B. Prosecution History of the ’921 Patent

48. I have reviewed the prosecution history of the ’921 Patent, including the Notice of Allowance dated October 18, 2023 (EX1002, pp. 19-27) and the List of References Cited by the Examiner also dated October 18, 2023 (*id*. at pp. 29-30). The Notice of Allowance included an Examiner’s Amendment canceling claim 68, amending claim 56 to address a minor issue of form, and amending claim 67 (which matured into independent Claim 21 of the ’921 Patent) to add a “biasing member configured to bias the actuator to the first position” that was previously recited in dependent claim 68. EX1002, p. 24.

With that Amendment, the Examiner allowed each of the pending claims 52-67 and 69-78. *Id*. at p. 23.

49. The Examiner listed 16 patent references in the List of References Cited that I understand the Examiner to have considered before allowing the claims. *Id*. at pp. 29-30. Those references include Petitioner's asserted references Hartley (EX1006) and Eller (EX1007), as well as Wong (EX2019), Kees (EX2018), and Williams (EX1010) that I describe in further detail below regarding claim construction in §V.E.

50. In the Notice of Allowance, the Examiner found that the "closet prior art of record is Hartley (US 2003/0116731), Williams et al. (US 3,438,607) however these references do not disclose the device as claimed or described below." EX1002, p. 25. The Examiner concluded that Hartley "fails to disclose a biasing member configured to bias the actuator to the first position" and that Williams "fails to discloses [sic] a filament extending around the elongate member." *Id*. at pp. 25-26. I agree with the Examiner's conclusions in the Notice of Allowance.

51. The '921 Patent ultimately issued on December 19, 2023, with original claims 52-67 and 69-78 issued as renumbered claims 1-26. *Id.* at p. 3.

C. Cited References

52. Petitioner has cited three different references—Schaffer, Hartley, and Eller—in its Petition challenging the patentability of the claims of the ’921 Patent. I describe those references in this section below.

1. Schaffer

53. The sealing mechanism present in the hemostasis valve of the ’921 Patent is different from the sealing mechanism employed by Schaffer. As seen in Figure 12 below, Schaffer's mechanism involves several sealing components within a seal module 100, specifically identified as seal members 165, 170, and 180.

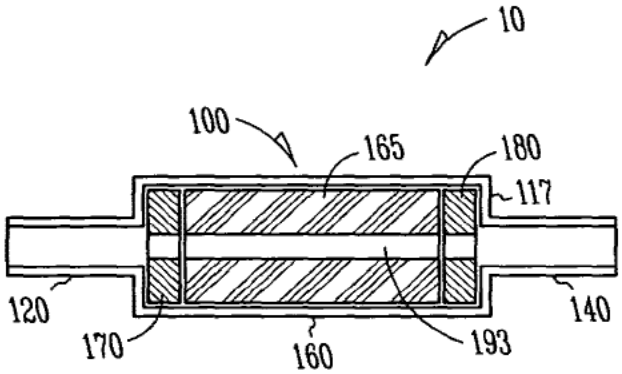

Fig. 12

EX1005, ¶ [0051].

54. These components are integral to Schaffer’s sealing process, with seal member 165 being a consistent element in all of Schaffer’s various embodiments. According to Schaffer, “[t]he third central seal member 165 is sized and configured to maintain an open lumen 193 when no compressive force 67 is

applied." *Id*. at ¶ [0054]. To achieve sealing, actuating members 55 are "forcibly pushed against the central portion of the seal module 100, [and] the compressive force 67 of the actuating member 55 against the outer wall 27 of the containment structure 160 inwardly depresses or collapses the third central seal member 165 of the containment structure 160 as the actuator 50 progresses toward the first side wall 23 of the housing 20." *Id.* at ¶ [0055]. The internal seal member 165 is made from a material 166 that is "highly elastic, deformable, compliant and yet virtually non-compressible." *Id.* at ¶ [0054]. This "highly compliant third central seal member 165 seals around a variety of profile shapes 192 and diameters 194 of the lumen 193 when at least one side of compressive force 67 is exerted upon the central region 195 with respect to the central portion 110 of the containment structure 160." *Id.* at ¶ [0060].

55. In essence, Schaffer employs actuating members 55 to apply an external compressive force 67 to a seal module 100, without those actuating members 55 conforming to the outer surface of the seal module during compression. The internal seal member 165 adapts to various shapes and sizes to seal a lumen, as illustrated in Figures 16-19 below.

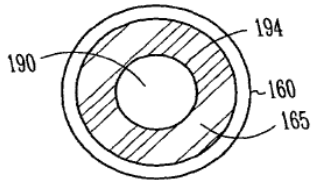

Fig. 16

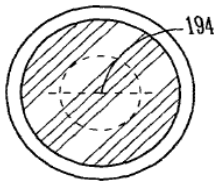

Fig. 17

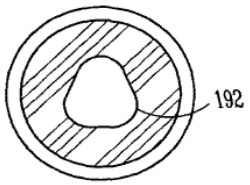

Fig. 18

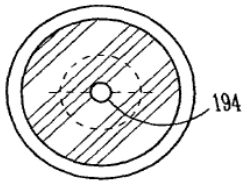

Fig. 19

Schaffer's internal seal member 165 provides a seal with precise control of compression force for easy manipulation of, and to prevent damage to, delicate tools inserted therethrough:

> Thus, the problems are complex and involve a balance between closing force, opening force, friction, compression and durability. If a valve is inordinately tight, having a closed lumen, it may not allow the insertion of soft, flexible instrumentation such as a "floppy-tip" guidewire, a delicate laser fiber or a soft-tipped catheter. Some catheters, optical fibers and fluid transmission tubes are very delicate and can be damaged by excessive compression or insertion force.

EX1005, ¶[0006].

56. Schaffer additionally explains that a "compressive load" necessary for sealing can be provided by a "movable, sliding or hinged, actuator 50," which results in a compressive force on the third central seal member 165, ensuring the seal is effectively formed and maintained. *Id.* at ¶ [0060]. However, the embodiments shown in Figures 12-15 disclose configurations that do not include actuating members, as they require "no compressive load for use in sealing the statis valve 10 closed." *Id.* at ¶ [0063]. In these embodiments, the sealing member 165 is relied upon to form a seal instead of the compressive load. As illustrated in Schaffer's Figures 13 and 14, "retrograde flow 270 forces the first seal member 170 toward the third central seal member 165 in the containment structure 160. As the first seal member 170 moves distally, or toward the second seal member 180 under the influence of the pressure from the gas or fluid, the third central seal member 165 is compressed." *Id.* at ¶ [0065].

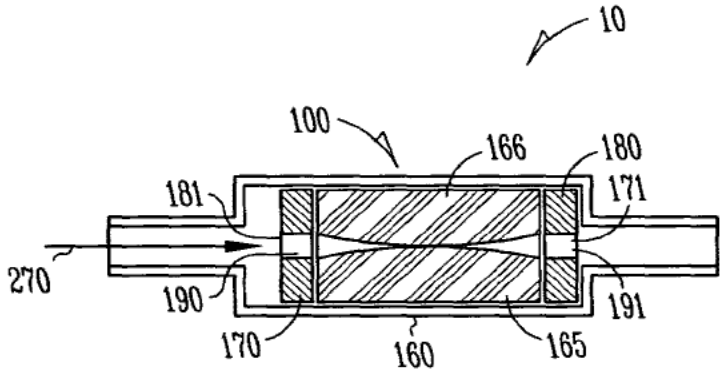

Fig. 13

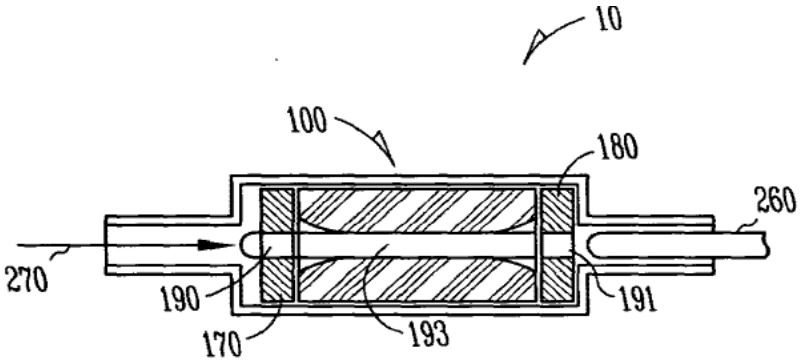

Fig. 14

57. Schaffer discloses that improved durability and control and ease of manufacture are among the several advantages of using a non-conforming actuating members 55 with an internal conforming seal member 165. In fact, each embodiment in Schaffer functions in this way, as illustrated in Figures 4, 6-8, 9-10, 12-15, and 23-29, and includes the seal member 165. Additionally, in relation to Figures 30-34 relied upon by Petitioner, Schaffer discloses that the "seal module 100 is formed of one or more seal members, as discussed above" with reference to Figures 1-29 and that (i) in the first sealed position of the

valve 10 the "lumen 193 of the third seal member 165 is at least partially collapsed by the compressive force 67" and (ii) in the second unsealed position of the valve 10 the "lumen 193 of the third seal member 165 is able to retract in an unsealed configuration." EX1005, ¶¶ [0075], [0077]. Thus, the embodiment of Figures 30-34 includes the seal member 165.

2. Hartley

58. As shown below, Hartley describes an access valve featuring a string 14 that extends around a cylindrical elastomeric diaphragm 8 and is secured by knots 16 and 18 to a single rotary actuator 12. EX1006, ¶ [0031]. This rotary actuator 12 is a single, integral piece, such that that both knots 16 and 18 are attached to the same actuator. Consequently, the single rotary actuator 12 controls the movement of both ends of the string 14 and moves both ends at precisely the same rate at the same time.

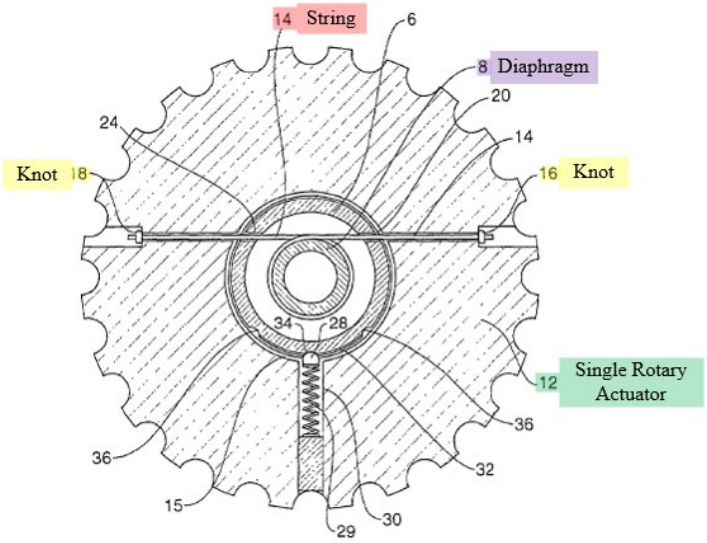

Fig 3

3. Eller

59. As displayed below, Eller describes a selective fluid barrier device 810 that comprises a housing 816, an actuator 818, a sleeve 820, and a wire member 822 with a first end 924 attached to the housing 816 and a second end 926 attached to the actuator 818. EX1007, 23:50-62, 24:50-52. Additionally, Eller describes other embodiments featuring multiple wire members, each with a first end connected to a housing and a second end connected to a single actuator. In all these embodiments, the wire members have one end fixed to the housing and the other end attached to the actuator. The actuator's movement (e.g., rotation or translation) pulls only the second end of the wire member, while the first end remains stationary. Thus, the movement of the single actuator governs the movement of the wire member.

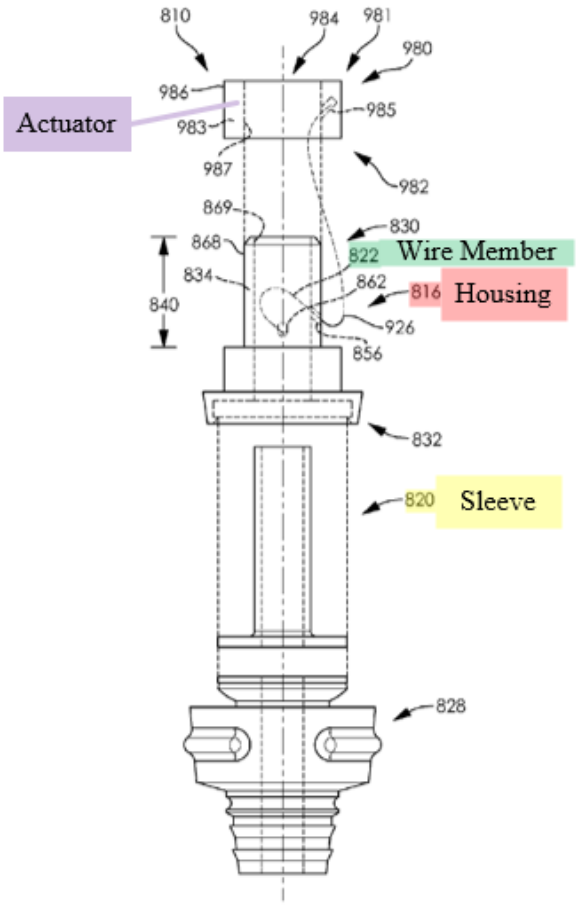

FIG. 20

D. Person of Ordinary Skill in the Art

60. A POSITA in September 2017 would have had an undergraduate degree in mechanical engineering or a related engineering discipline and 2 to 4 years of product design or engineering experience designing medical devices in the field of the ’921 Patent. A person with less education but more relevant practical experience, or more relevant education but less practical experience, may also meet this standard.

61. Petitioner asserts that a "POSITA in September 2017 would have had an undergraduate degree in mechanical engineering or a related engineering discipline and 2-4 years of product design or engineering experience." Petition, p. 16. I disagree—Petitioner's suggested definition is insufficient to qualify as a POSITA because, although Petitioner's suggested definition of a POSITA includes a comparable level of education to mine, it does not include any experience in designing medical devices, particularly in the context of the '921 Patent. Having experience in the relevant field is important for designing hemostasis valves.

62. Nevertheless, I apply Petitioner's definition throughout my declaration as, even under this too-low definition of ordinary skill, a POSITA would have understood the Claims of '921 Patent to be patentable over the prior art references cited in grounds 1–5. I was also at least a person of ordinary skill in the art as of the priority date of the '921 Patent according to this standard.

E. Claim Construction

63. I understand that to properly construe a claim the words of the claim must be considered. I also understand terms are generally given their ordinary and customary meaning as understood by a person of ordinary skill in the art at the time of the invention when read in the context of the specification and prosecution history unless the patentee "deviate[s] from the plain and ordinary

meaning of a claim term by disavowing claim scope or acting as his own lexicographer." *Augme Techs., Inc. v. Yahoo! Inc.*, 755 F.3d 1326, 1333 (Fed. Cir. 2014). I understand that in order for a patentee to act as its own lexicographer, it "must 'clearly set forth a definition of the disputed claim term' other than its plain and ordinary meaning." *Cont'l Cirs. LLC v. Intel Corp.*, 915 F.3d 788, 796 (Fed. Cir. 2019).

64. Independent Claims 1, 15, 21, and 25 each recite a "filament." Here, the '921 Patent uses the plain and ordinary meaning for the term "filament"—a "thin, flexible length of material formed by one or more strands of material"—as would be understood by a person of ordinary skill in the art as of September 6, 2017. The claim language itself, the specification, the prosecution history (including the Examiner's understanding of meaning of the term filament demonstrated by their description of the various prior art references), and the extrinsic evidence (including dictionaries), support that this is the plain and ordinary meaning of "filament." References in the patent to example materials that can be used to make the filament do not change that meaning.

65. Petitioner contends that the proper construction for "filament" is "at least 'one or more threads, lines, cords, ropes, ribbons, flat wires, sheets, or tapes.'" Petition, p. 17. In other words, Petitioner argues that a filament is any structure that includes "at least one or more" of the recited list of non-limiting structures

provided in a list at column 9, lines 15-17 of the specification of the '921 Patent. I disagree.

1. Claim Language

66. The language of the Claims themselves confirms that a filament must be flexible. For example, Independent Claim 1 requires an "active tensioning mechanism including an actuator coupled to the elongate member via a filament extending at least partially around the elongate member, wherein the actuator is moveable between (a) a first position wherein the lumen is constricted and sealed and (b) a second position wherein the lumen is at least partially open." Likewise, Independent Claim 25 requires an "active tensioning mechanism including a first actuator coupled to the elongate member via a first filament and a second actuator coupled to the elongate member via a second filament … wherein the first actuator and/or the second actuator is moveable between (a) a first position in which the constricting region has a decreased size such that the lumen is constricted and sealed and (b) a second position in which the constricting region has an increased size such that the lumen is at least partially open."

67. With this design, a POSITA would understand the actuator actively changes the tension in the filament when the actuator is moved between the first and second positions. *See*, e.g., Merriam Webster's Collegiate Dictionary,

EX2025, p. 1288 (defining the verb "tension" as to "tighten to a desired or appropriate degree" and p. 13 (defining "active" as "producing or involving action or movement"). Thus, a POSITA would understand the claimed "active tensioning mechanism" to require movement/change of the tension in the filament—e.g., loosening of the filament when the actuator is moved to the second position and tightening of the filament when the actuator is moved to the first position as repeatedly disclosed throughout the specification of the '921 Patent, as I explain in the next section (§V.E.2). If the filament were rigid or inflexible, the tension in the rigid or inflexible filament would remain the same when the actuator is moved between the different positions. That is, with a rigid or inflexible filament, there would be no changes in the tension in the filament and therefore no "active tensioning."

2. Specification

68. The specification of the '921 Patent further confirms that a filament must be flexible. For example, the specification discloses that when the buttons 144 are depressed in the second position, "the filament 150 is **loosened**, thereby allowing the expansion of the elongate member 132 and the unsealing of the central lumen 138 of the elongate member 132." EX1001, 9:53-56 (emphasis added). Likewise, when the buttons are released to the first position, "the filament 150 is **tightened**." *Id*. at 9:36-37. A POSITA would understand that

this general disclosure of the filament 150 applies to all embodiments—including the loop embodiments in Figures 6 and 7 and the bight embodiments in Figures 8 and 9 of the '921 Patent. That is, the general description of the filament 150 applies to each of the more specific "different embodiments and/or configurations of the filament 150" shown in Figures 6-9. *Id*. at 12:37-39.

69. A POSITA would understand that when the filament is "loosened," the filament slackens and relaxes as tension is decreased in the filament and the elongate member expands against the filament as it loosens. *See*, e.g., Merriam Webster's Collegiate Dictionary, EX2025, p. 735 (defining "loose" as "not tightly drawn or stretched: **slack**" and "being **flexible** or relaxed") (emphasis added). Conversely, when the filament is "tightened," that slack is picked up as tension is increased in the filament and the filament constricts the elongate member. A POSITA would further understand that this is precisely the type of "active tensioning" recited in the Claims—the filament loosens/slackens when the actuator buttons are pressed and tightens when they are not. Thus, the ability of the filament to flex or slack is a necessary property of the claimed filament that allows the filament to "loosen" to thereby allow the elongate member to expand and unseal the valve and "tighten" to thereby constrict the

elongate member. Accordingly, the specification confirms that the filament must be flexible to "loosen" and "tighten."

70. In a petition for IPR for related U.S. Patent 11,865,291, Petitioner asserted that "[m]any inflexible items can be loosened, such as screws and bolts." *Imperative Care, Inc. v. Inari Medical, Inc.*, IPR2025-00728, Paper 25, p. 25. While it is correct that a rigid screw or bolt can be loosened or tightened relative to something else, such as a substrate (e.g., a piece of wood), that rigid screw or bolt must be able to move (e.g., rotate) relative to the substrate to do so. In contrast, in each of the embodiments of the '921 Patent, the filament(s) are fixedly coupled to the actuator 142 such that they could not move relative to the actuator 142 if they were rigid. Instead, they longitudinally slacken/tighten when the buttons are depressed/released. That is, taking Petitioner's analogy, if the screw or bolt could not be screwed or driven into or out of the substrate it could not be tightened or loosened, just like the filaments of the '921 Patent could not be tightened or loosened if they were rigid because they cannot otherwise move relative to the actuator 142.

71. That principle is demonstrated in Figure 6 of the '921 Patent, which shows a single filament 150 configured to form a single loop 604 that extends around the elongate member 132:

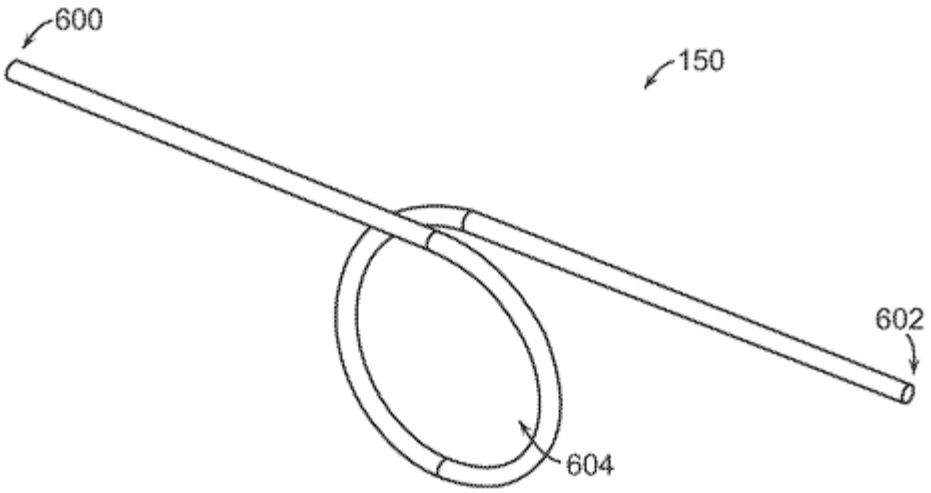

FIG. 6

EX1001, 13:10-14. "[E]ach of the first end 600 and the second end 602 can be coupled to different buttons 144" of the actuator. *Id*. 12:47-49. When these buttons are actuated, they exert opposing forces on the respective filament ends, causing the loop's diameter to decrease and constrict the elongated member. If the filament of Figure 6 were completely inflexible, it could not work as intended. That is, applying a force that seeks to pull the respective ends 600 and 602 of the filament in opposing directions would not cause the lumen to be "constricted" as recited in the Claims. Instead, the portion of the filament around the lumen would stay the same size and an elongate member extending through that loop would not be constricted and sealed. Thus, in the above embodiment the filament must be sufficiently flexible that it can decrease the size/diameter of the loop to constrict and seal the valve, consistent

with the plain and ordinary meaning of filament. Likewise, Figure 7 of the ’921 Patent illustrates two filaments each formed into a loop that must also be sufficiently flexible to reduce in diameter. *Id* at 13:14-22.

72. Regarding the bight embodiments shown in Figures 8 and 9 of the ’921 Patent, a POSITA would understand that when the filaments loosen slack is induced in each of the bights. Specifically, this is in accordance with the meaning of “bight”: a “**slack** part or loop in a rope.” EX2025, p. 120 (emphasis added).

73. While the specification describes the filament as comprising various potential materials, such as “a polymer, a synthetic, and/or a metal” (EX1001, at 9:7-9), that the filament can be formed from materials within broad categories like polymers and metals that can, but certainly do not have to, be formed into rigid components (depending on the structure) does not mean that the term “filament” is broadened from its plain meaning to include a rigid component. Flexibility is a function of both material and form. For instance, metals, such as steel can be used to create a steel girder for a building which is rigid, but steel can also be formed into long, narrow strands to produce a flexible wire or cable. Similarly, polymers—while potentially rigid in certain configurations—can be formed into flexible strands or lines that could serve as a filament. Thus, the material chosen to form the filament does not alter the plain

and ordinary meaning of the term "filament" as understood by a POSITA, which is flexible and thin.

74. Petitioner's misplaced reliance on the composition of the filament ignores the essential principle that the structural characteristics of a component, not merely the materials from which it is made, define its function and properties. Likewise, while Petitioner contends that the proper construction for "filament" is "at least 'one or more threads, lines, cords, ropes, ribbons, flat wires, sheets, or tapes'" regardless of whether or not those configurations are flexible (Petition, pp. 18, 30-31; EX1003, ¶ 90), a POSITA would understand those forms are commonly considered flexible. Though some of those forms can also be configured to be rigid does not redefine the term filament to include rigid members. Each recited structure is consistent with the plain meaning of a filament, which is flexible.

75. Petitioner and its expert assert that Patent Owner's proposed construction is incorrect because it would "improperly exclude specific 'filaments' identified in the '921 application, such as a 'sheet' of metal." Petition, p. 18; EX1003, ¶ 52. Namely, Petitioner's expert asserts that a "sheet of metal or polymer, or a tape made of metal or polymer, for example, would not include 'one or more strands of material'." EX1003, ¶ 52. I disagree. A sheet or tape of metal/polymer could comprise one strand of material—for example, a "monofilament"

as disclosed in the ’921 Patent. EX1001, 9:10-12. Moreover, multiple flexible sheets or tapes of metal/polymer could also be “twisted, woven, grouped or fused to form [a] filament” as disclosed in the ’921 Patent. *Id*. at 9: 12-15.

3. Prosecution History

76. The prosecution history further supports that “filament” means a “thin, flexible length of material formed by one or more strands of material.” Petitioner’s proposed construction of filament includes any one or more threads, lines, cords, rope, ribbon, flat wire, sheet, or tape that can be rigid or flexible. It is my opinion that Petitioner’s proposed construction is overly broad for the additional reason that it is contrary to the Patent Office’s repeated interpretation of this term. The Patent Office understood a filament to be thin and flexible in the same way a POSITA would have in 2017. For example, in the Notice of Allowance dated October 18, 2023, the Examiner found that Hartley was the “closest prior art of record” (along with Williams) and discloses a “filament.” EX1002, p. 25. Indeed, in accordance with the plain and ordinary meaning of the term, Hartley discloses a thin “flexible member” or “string” 14.

77. Moreover, while I do not see that Schaffer was expressly considered during prosecution of the ’921 Patent, as I explain below, the Patent Office considered similar prior art having rigid actuating members that are biased to

compress and seal a resilient/expandable tubular member including, for example, Wong (EX2019), Kees (EX2018), and Williams (EX1010). And, in accordance with the plain and ordinary meaning of the term, the Patent Office did not find those references to disclose a "filament."

a. Schaffer

78. The primary embodiment relied upon by Petitioner shown in Figures 30-34 of Schaffer discloses a stasis valve 10 having a seal module 100 and two actuators 50 each attached to a rigid actuating member 55 that is disposed about the seal module 100:

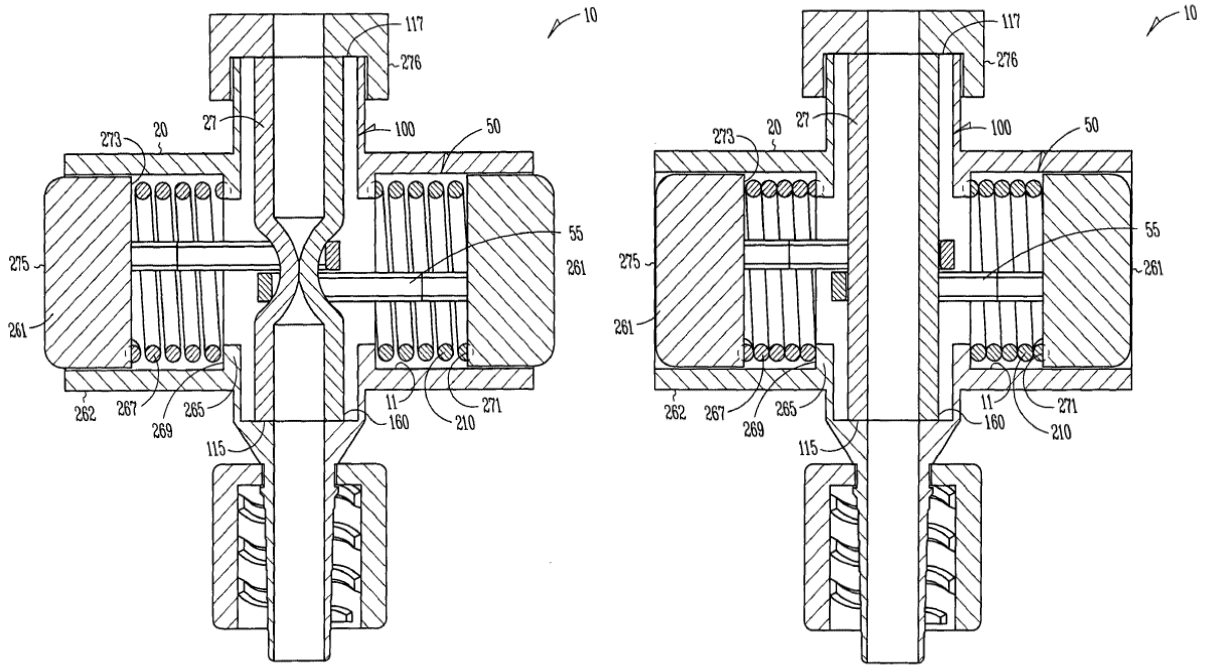

Fig. 32 Fig. 34

EX1005, ¶¶ [0075]-[0077]. Two resilient members 267 (e.g., springs 210) bias the actuators 50 such that the actuating members 55 compress and

collapse the seal module 100 in a sealed first position shown in Figure 32. *Id.* at ¶¶ [0076]-[0077]. Actuating the actuators 50 moves the actuating members 55 against the biasing force of the resilient members 267 to permit the seal module 100 to move to an unsealed second position such that gases and fluids can pass therethrough as shown in Figure 34. *Id.* at ¶ [0077].

b. Wong

79. I understand that Wong was considered by the Examiner because it was cited by the Examiner in the Notice of References Cited and appears on the face of the ’921 Patent with a * next to its patent publication number. EX1002, p. 29; EX1001, p. 5. Like Schaffer, Wong discloses a hemostatic valve 13 having an elastic valve member 19, a pair of rigid actuating first sliders 15, and a pair of second sliders 17 each including a V-shaped groove 17a that is disposed about the elastic valve member 19:

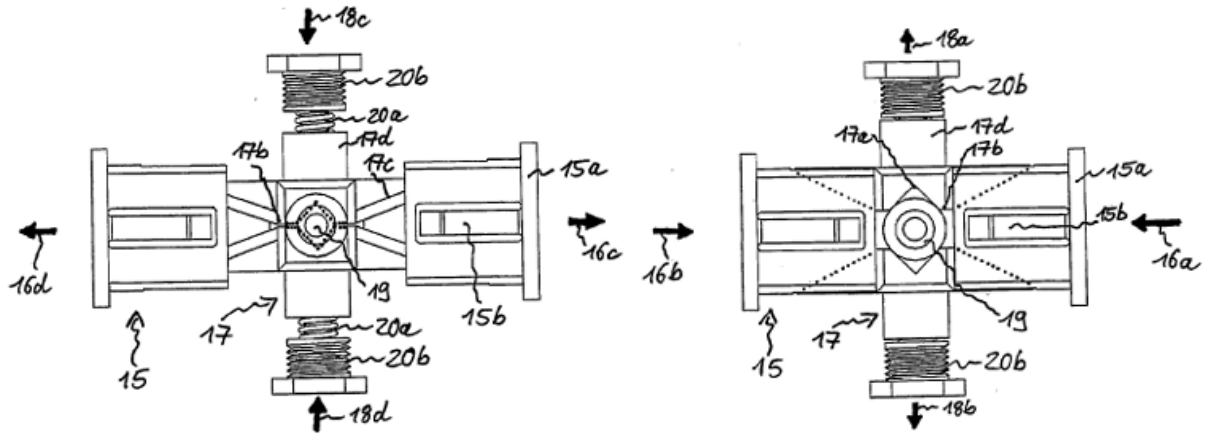

Fig. 11 Fig. 10

EX2019, ¶¶ [0042], [0052]. Two resilient members 20a (e.g., coil springs) bias the actuating first sliders 15 such that the second sliders 17 compress and seal the elastic valve element 19 in a sealed first position shown in Figure 11. *Id.* at ¶ [0061]. Actuating the second sliders 15 moves the V-shaped second sliders 17 against the biasing force of the resilient members 20a to permit the elastic valve element 19 to move to an unsealed second position such that gases and fluids can pass therethrough as shown in Figure 10. *Id.* at ¶ [0060]. Accordingly, Wong discloses a valve that is similar to Schaffer:

Disclosure of Schaffer	**Substantially the Same Disclosure of Wong**
Stasis valve 10	Haemostatic valve 13
Seal module 100	Elastic valve element 19
Actuators 50	First sliders 15
Actuating members 55	V-shaped second sliders 17
Resilient members 267	Resilient members 20a
Biased, sealed first position of the stasis valve 10 shown in Figure 32	Biased, sealed first position of the haemostatic valve 13 shown in Figure 11
Unsealed second position of the stasis valve 10 shown in Figure 34	Unsealed second position of the haemostatic valve 13 shown in Figure 10

80. But the Patent Office allowed the claims of the ’921 Patent over Wong and did not find that the V-shaped second sliders 17 or any other rigid actuating structure of Wong constituted a “filament.” I agree with the Patent Office.

Petitioner's overly-broad construction of "filament" to include rigid members is contrary to the Patent Office's finding that Wong does not disclose a "filament." For example, under Petitioner's proposed construction, the V-shaped second sliders 17 of Wong are a filament because they are at least a "line," "sheet," "ribbon," or the like as best seen in Figure 4 of Wong:

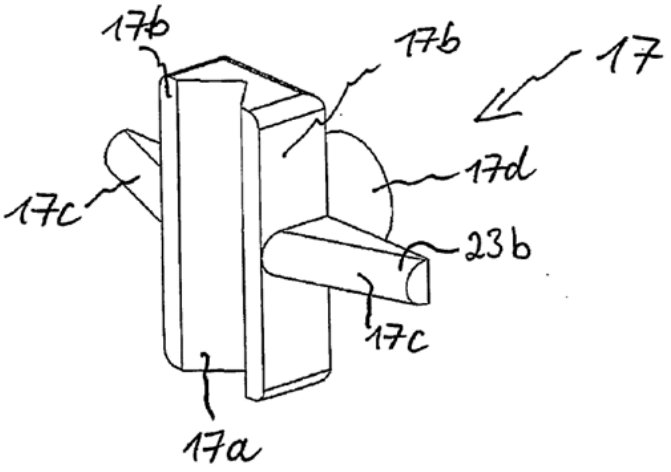

Fig. 4

However, in accordance with its plain and ordinary meaning as "flexible," the Patent Office allowed the claims of the '921 Patent over Wong without finding that the V-shaped second sliders 17 or any other structure of Wong comprised a filament.

81. What's more, the Patent Office found that Wong does not disclose a "filament" during prosecution of the parent application to the '921 Patent, U.S. Patent Application No. 16/117,519 ("the Parent '519 Application"). The

claims allowed in the Parent ’519 Application are similar to the challenged claims here:

Claim 1 of the Parent ’519 Application	Claim 1 of the ’921 Patent
1. A hemostatic valve for sealing a medical device, the hemostatic valve comprising:	1. A valve, comprising:
an elongate member having a first end, a second end, and a central lumen extending therebetween, wherein the elongate member is pliable;	an elongate member defining a lumen;
a reinforcement structure extending along at least a portion of the elongate member, wherein the reinforcement structure is coupled to the elongate member;	
an active tensioning mechanism including an actuator coupled to the elongate member, wherein the actuator is moveable between (a) a first position wherein the central lumen is constricted and sealed and (b) a second position wherein the central lumen is open, and wherein the tensioning mechanism comprises at least one filament extending at least partially around the elongate member; and	an active tensioning mechanism including an actuator coupled to the elongate member via a filament extending at least partially around the elongate member, wherein the actuator is moveable between (a) a first position wherein the lumen is constricted and sealed and (b) a second position wherein the lumen is at least partially open; and
a biasing member configured to bias the actuator to the first position.	a biasing member configured to bias the actuator to the first position.

82. In a Notice of Allowance in the Parent ’519 Application, the same Examiner that considered and allowed the ’921 Patent identified Wong as one of three prior art references (including Hartley and Kees) that were the “closest prior art of record” but that “these references do not disclose the device as claimed.” EX2020, p. 4. In particular, the Examiner concluded that “the prior art[]

Wong … [is] missing the filament." *Id.* at p. 5. Again, the Examiner concluded that the rigid actuating members of Wong (like those of Schaffer) are not a "filament" in accordance with the plain and ordinary meaning of the term as flexible.

c. Kees

83. I understand that Kees was considered by the Examiner because it cited by the Examiner in the Notice of References Cited and appears on the face of the '921 Patent with a * next to its patent publication number. EX1002, p. 29; EX1001, p. 5. Similar to Schaffer, Kees discloses a pinch valve 1 having a hose-like valve member 25 with a flexible peripheral wall 24, an actuating ring 37, and a pair of rigid pinch elements 28a and 28b disposed about the valve member 25:

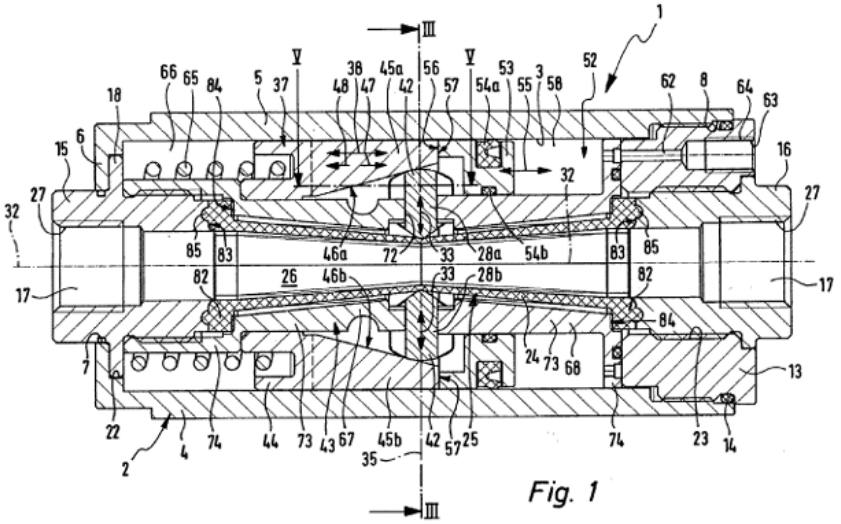

Fig. 1

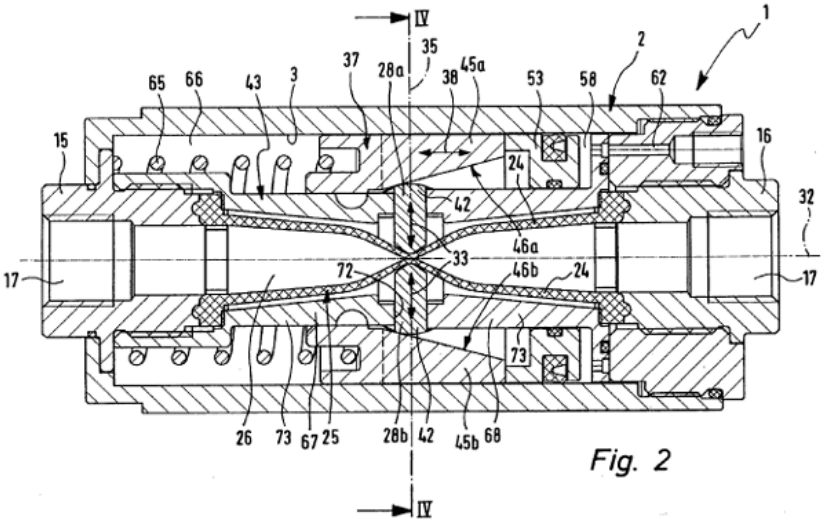

Fig. 2

EX2018, ¶¶ [0046], [0048], [0055]. Spring means 65 bias the actuating ring 37 such that the pinch elements 28a and 28b compress and seal the valve member 25 in a sealed first position shown in Figure 2. *Id.* at ¶¶ [0053], [0071]. Unlike Schaffer, the pinch elements 28a and 28b are positioned in-line with one another to pinch the valve member 25 rather than the side-by-side arrangement of Schaffer's U-shaped actuating members that compress and crush rather than pinch the seal module. Actuating the actuating ring 37 moves the actuating ring 37 against the biasing force of the spring means 65 to permit the valve member 25 to move to an unsealed second position such that gases and fluids can pass therethrough as shown in Figure 1. *Id.* at ¶¶ [0054], [0072]. Accordingly, Kees discloses a valve that is substantially the same as Schaffer:

Disclosure of Schaffer	**Substantially the Same Disclosure of Kees**
Stasis valve 10	Pinch valve 1
Seal module 100	Hose-like valve member 25
Actuators 50	Actuating ring 37
Actuating members 55	Pinch elements 28a and 28b
Resilient members 267	Spring means 54
Biased, sealed first position of the stasis valve 10 shown in Figure 32	Biased, sealed first position of the pinch valve 1 shown in Figure 2
Unsealed second position of the stasis valve 10 shown in Figure 34	Unsealed second position of the pinch valve 1 shown in Figure 1

84. But the Patent Office allowed the claims of the ’921 Patent over Kees, like Wong, and did not find that the pinch elements 28a and 28b or any other rigid actuating structure of Kees constituted a “filament.” Petitioner’s overly-broad construction of “filament” to include rigid members is contrary to the Patent Office’s finding that Kees does not disclose a “filament.” This asserted construction ignores/contradicts the “garrote” operating basis of the ’921 Patent that I describe above. A rigid member cannot physically produce tensioning changes, described previously. For example, under Petitioner’s proposed construction, the pinch elements 28a and 28b of Wong are a filament because they are at least a “line,” “sheet,” “ribbon,” or the like as best seen in Figure 3 of Kees:

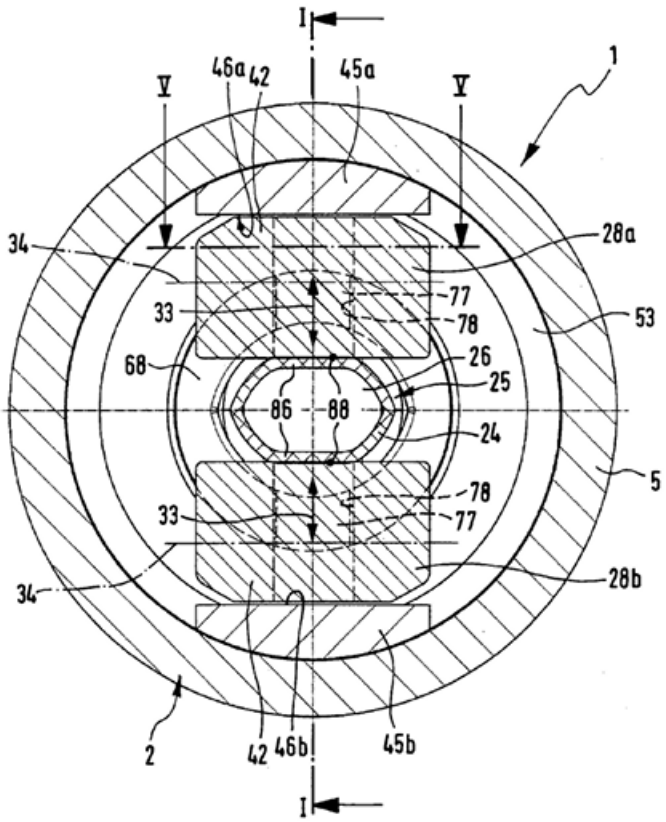

Fig. 3

However, in accordance with its plain and ordinary meaning as "flexible," the Patent Office allowed the claims of the '921 Patent over Kees without finding that the pinch elements 28a and 28b or any other structure of Kees comprised a filament.

85. What's more, the Patent Office found that Kees does not disclose a "filament" during prosecution of the Parent '519 Application having similar claims as I describe above in §V.E.3.b. In the Notice of Allowance in the Parent '519 Application, the same Examiner that considered and allowed the '921 Patent identified U.S. Patent No. 7,775,501 (the issued patent corresponding to the

publication of Kees (EX2018)) as one of three prior art references (including Hartley and Wong) that were the "closest prior art of record," but that "these references do not disclose the device as claimed." EX2020, p. 4. In particular, the Examiner concluded that "the prior art … Kees [is] missing the filament." *Id.* at p. 5. Again, the Examiner concluded that the rigid actuating members of Kees (like those of Schaffer) are not a "filament" in accordance with the plain and ordinary meaning of the term as flexible.

d. Williams

86. I understand that Williams was considered by the Examiner because it was cited by the Examiner in the Notice of References Cited and appears on the face of the '921 Patent with a * next to its patent number. EX1002, p. 29; EX1001, p. 2. In the Notice of Allowance, the Examiner identified that the "closest prior art of record is Hartley (US2003/0116731) … [and] Williams et al. (US 3,438,607)" finding that Williams discloses a valve, an active tensioning mechanism including an actuator, and a biasing spring, but that "Williams fails to discloses [sic] a filament extending around the elongate member." EX1002, p. 26. Like Schaffer, Williams discloses a valve having an elongated hollow element 12 of elastomeric material and a rigid actuating clamp 16 having a transversely extending rib 24 disposed about the elongated hollow element 12:

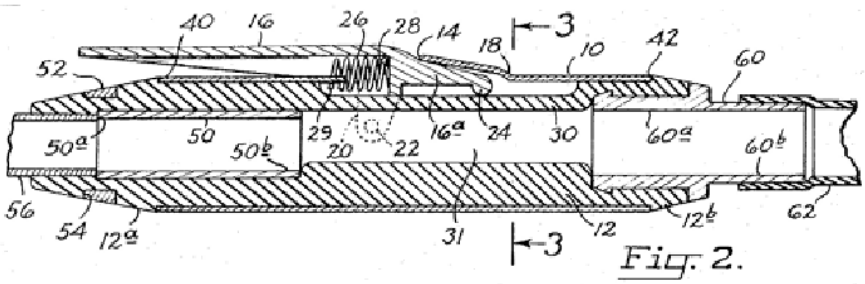

Fig. 2.

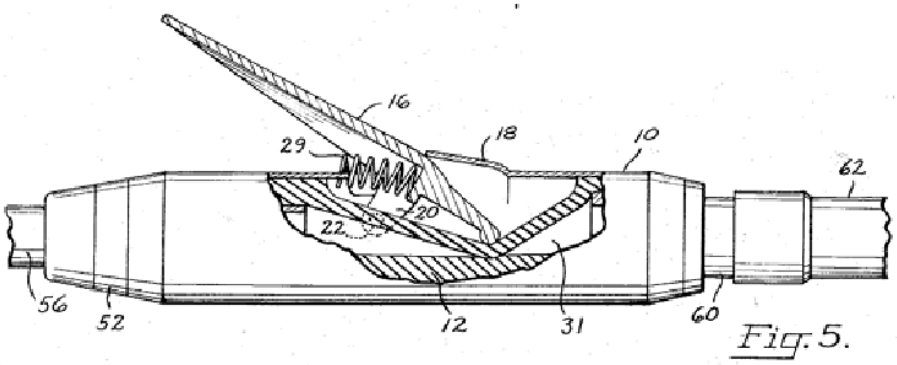

Fig. 5.

EX1010, 2:39-44, 2:63-65. A coil compression spring 26 biases the actuating clamp 26 in a clockwise direction such that the transversely extending rib 24 compresses and seals the elongated hollow element 12 in a sealed first position shown in Figure 5. *Id.* at 2:66-3:2, 4:17-29. Unlike Schaffer, the transversely extending rib 24 is positioned to pinch the elongated hollow element 12 rather than the side-by-side arrangement of Schaffer's U-shaped actuating members that compress and crush rather than pinch the seal module. Actuating the clamp 16 (e.g., when the "clamp is gripped and swung in a counterclockwise direction from the position shown in FIG. 5") moves the clamp 16 against the biasing force of the coil compression spring 26 to permit the elongated hollow element 12 to move to an unsealed second position such that

gases and fluids can pass therethrough as shown in Figure 5. *Id.* at 4:29-39. Accordingly, Williams discloses a valve that is substantially the same as Schaffer:

Disclosure of Schaffer	**Substantially the Same Disclosure of Williams**
Stasis valve 10	Valve
Seal module 100	Elongated hollow element 12
Actuators 50	Clamp 16
Actuating members 55	Transversely extending rib 24
Resilient members 267	Coil compression spring 26
Biased, sealed first position of the stasis valve 10 shown in Figure 32	Biased, sealed first position of the valve shown in Figure 5
Unsealed second position of the stasis valve 10 shown in Figure 34	Unsealed second position of the pinch valve 1 shown in Figure 2

87. But the Patent Office expressly found that Williams does not disclose a "filament." EX1002, p. 26. Petitioner's overly-broad construction of "filament" to include rigid members is contrary to the Patent Office's finding that Williams does not disclose a "filament." For example, under Petitioner's proposed construction, the rigid transversely extending rib 24 of Williams is a filament because it is at least a "line," "cord," "ribbon," or the like as best seen in Figure 3:

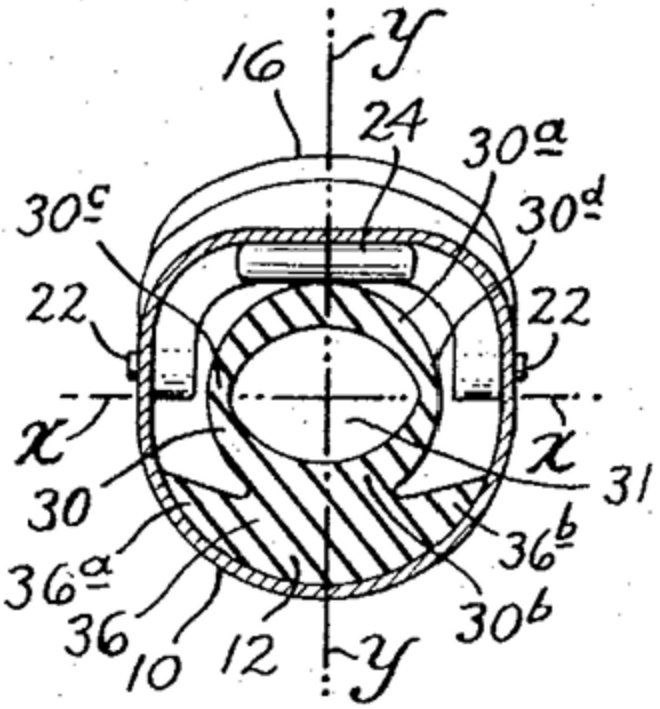

Fig. 3.

But, in accordance with its plain and ordinary meaning as "flexible," the Patent Office expressly found that Williams does not disclose the claimed "filament."

4. Extrinsic Evidence

88. Contemporaneous extrinsic evidence in the form of dictionaries also demonstrate that a "filament" is flexible. For example, the Merriam-Webster's Collegiate Dictionary defines a filament as "a single thread or a thin **flexible** threadlike object, process, or appendage." EX2025, p. 467 (emphasis added).

Likewise, the New Oxford American Dictionary defines a filament as "a slender threadlike object or fiber." EX2026, p. 644.

89. Petitioner asserts that claim 1 of related U.S. Patent 12,109,384 ("the '384 Patent"; EX1016) supports its claim construction because claim 1 recites a filament that "is flexible". I have reviewed those claims, and they do not change my opinion herein. Specifically, the '384 Patent and claims recite the term "filament" in accordance with the plain and ordinary meaning set forth here, namely, a "thin, flexible length of material formed by one or more strands of material." Independent claims 1, 15, and 23 of the '384 Patent each require that the filament must meet that construction such that any recitation regarding that the "filament is flexible" in the claims does not change that construction particularly in view of the clear use of the term in the '921 Patent. Claims 1 and 15 of the '384 Patent require the filament "[extending/configured] in a [first/second] loop" and then require "decreasing a dimension of the [first/second] loop" or similar, and claim 23 requires "circumferentially restrict." As such, those claims support that filament is used in accordance with its plain and ordinary meaning and do not contradict the clear meaning of the term in the specification.

5. Degrees of Flexibility

90. Taking into account the claim language itself, the specification, the prosecution history, and other evidence, a POSITA would readily understand the degrees of flexibility required for the claimed filament—the filament must be sufficiently flexible so that it can loosen and reduce in diameter when formed in a loop as shown in Figures 6 and 7 of the '921 Patent, and similarly slacken when formed in a bight as shown in Figures 8 and 9 of the '921 Patent. That is, a POSITA would understand that the filament must be flexible to the degree necessary to slacken/loosen when the actuator is depressed.

VI. GROUND 1—SCHAFFER DOES NOT ANTICIPATE CLAIMS 1-7, 9-10, 15-18, OR 20-24

91. Petitioner and its expert, Mr. Thornton, allege that Schaffer discloses each and every feature of Claims 1-7, 9-10, 15-18, and 20-24 of the '921 Patent and therefore anticipates these claims. I disagree for the reasons I discuss in further detail in this section. A POSITA would understand that Schaffer does not disclose each limitation of independent Claims 1, 15, and 21 and therefore does not anticipate those claims. And, because Claims 2-7, 9-10, 16-18, 20, and 22-24 depend from one of independent Claims 1, 15, or 21 and thus include all the limitations from those base claims, those claims are also not anticipated by Schaffer. Schaffer further does not anticipate dependent Claim 3 or dependent Claim 10 for the reasons I explain below.

92. As I explained above, I understand that for a patent claim to be anticipated, each claim limitation must be present in a single piece of prior art. It is my understanding from counsel that a prior art reference can anticipate a claimed invention if the prior art reference disclosed each of the claimed limitations of the invention either expressly or inherently.

93. According to Petitioner, "Schaffer's actuating members [55] are 'filaments.'" Petition, p. 30. I disagree—Schaffer's two actuating members 55 are rigid metal or plastic U-shaped members and not thin and flexible and thus neither of the actuating members 55 are the claimed "filament."

94. As I explain in §V.E. above, the term "filament" means "a thin, flexible length of material formed by one or more strands of material." A POSITA would understand that Schaffer's actuating members 55 are rigid and therefore do not disclose "a filament," as recited in Claims 1, 15, and 21.

95. For example, Schaffer illustrates its stasis valve 10 in a first (sealed) position and a second (open) position in Figures 32 and 34[1], respectively:

[1] I refer to the versions of Schaffer's drawings relied on by Petitioner that were submitted during prosecution on June 18, 2003 (EX1008) showing features that are not seen or difficult to see in the published application's figures.

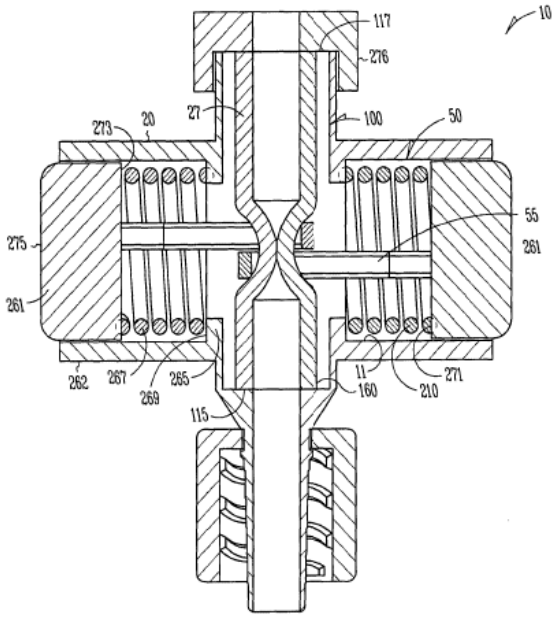

Fig. 32

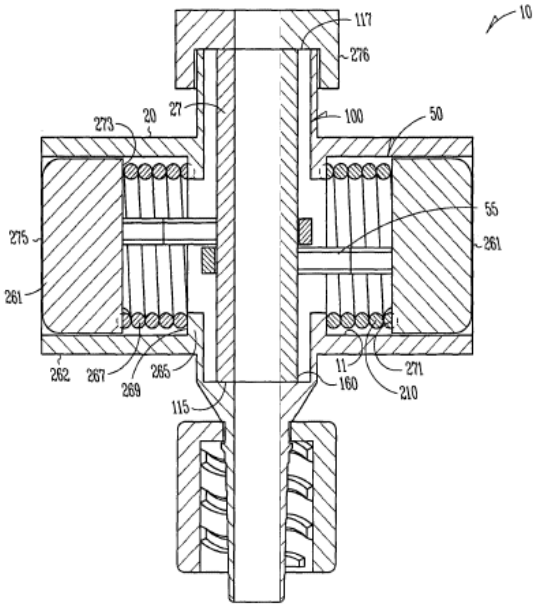

Fig. 34

Schaffer describes that "[i]n the first position the actuating members 55 of the actuators 50 are, in one option, disposed and at least partially circumferentially disposed about the portion 108 of the seal module 100 depressing and at least partially collapsing a portion 108 of the containment structure 160 by a compressive force 67 (e.g. by a spring 210)." EX1005, ¶ [0077]. "In the second position … each actuator button 261 is depressed" and "[s]uch movement allows each engaged actuating member 55 to **forcibly disengage** opposing outer walls 27 of the seal module 100 allowing the portion 108 of the containment structure 160 to retract to an uncollapsed configuration where gases and fluids can pass therethrough." *Id*. (emphasis added). That is, when the actuator buttons 261 are depressed, the actuating members 55 are forced to disengage from the seal module 100 with one of the actuating members 55

moving away from and out of contact with one of the outer walls 27 of the seal module 100 and the other one of the actuating members 55 moving away from and out of contact with the other opposing one of the outer walls 27 of the seal module 100.

96. A POSITA would understand that for each of the actuating members 55 to "forcibly disengage" opposing outer walls 27 of the seal module 100, the actuating members 55 must be rigid. For example, if the actuating members 55 were flexible, depressing the actuator buttons 261 to move the actuating members 55 would simply reduce a tension in the actuating members 55 such that they would deform/loosen without forcibly disengaging the seal module 100. That is, the flexible actuating members 55 would remain in contact with and never disengage the seal module 100, contrary to Schaffer's teachings.

97. Second, Schaffer teaches and Petitioner highlights that "Schaffer discloses the actuating members may be formed from aluminum or plastic." Petition, p. 30; EX1005, ¶¶ [0081]-[0082]. Further, Schaffer provides that the actuating members 55 are "machined from aluminum" or "machined from plastic." EX1005, ¶ [0082]. A POSITA would understand that these materials are rigid and that machining is a manufacturing process in which the desired part (e.g., the U-shaped actuating members 55) is created using the controlled removal of a bulk material (e.g., plastic or metal), typically a rigid material. A POSITA

would further understand that flexible parts, such as a thin and flexible filament, are difficult to machine conventionally, as flexible materials will deform when force is applied during the machining process—inhibiting or even preventing accurate manufacturing of the part.

98. Third, Schaffer discloses how its stasis valve is assembled, which necessitates rigid members that provide a space through which the seal module can be inserted:

> [T]he stasis valve 10 is assembled by inserting the actuator button 261 and resilient member 267 (e.g., spring 210) into one side of the housing 20. The actuator button 261 and resilient member 267 (e.g., spring 210) are inserted into an opposing side of the housing 20. Each actuator button 261 is completely compressed and held while the seal module 100 is inserted through the housing 20 and between each actuator 50. Each actuator button is released and the cap 276 secured to the housing 20, for example, with an adhesive. Further, the connecting member 35 is snapped onto the housing.

EX1005, ¶ [0083]. That is, a POSITA would understand that each of the actuator buttons 261 and the springs 210 are inserted into the cylindrical opening defined by a corresponding one of the cylindrical interior walls 11 of the housing 20 until the springs 210 abut the inner flange wall 265, then the actuator buttons 261 are depressed to form an opening through the U-shaped actuating members 55, and finally the seal module 100 is inserted through the opening:

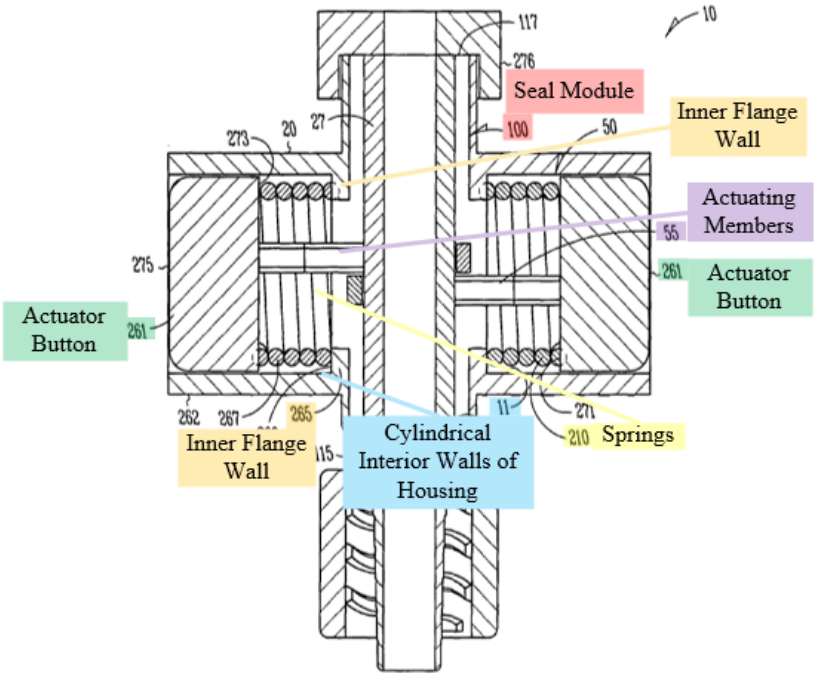

Fig. 34

99. A POSITA would understand that if the actuating members 55 were flexible rather than rigid, it would be much more difficult to assemble Schaffer's valve in the simple manner taught by Schaffer because the flexible actuating members would not provide a space through which the seal module 100 can be inserted. In particular, such flexible actuating members would be not tensioned (e.g., loose) when the actuator buttons 261 are compressed before the seal module 100 is inserted into Schaffer's valve such that they would not provide a uniform opening like the rigid actuating members 55 to permit positioning of the seal module 100 therethrough. Accordingly, a POSITA would understand that Schaffer's actuating members 55 are rigid because, if they were not, it would render the actuating members 55 unsuitable for their

intended purpose of simple manufacturability via insertion of the seal module 100 when the actuator buttons 261 are depressed. Further, the relaxed geometry of the proposed flexible actuating members 55 would be unpredictable and uncontrolled because of their flexibility—they would not hold their shape and could, for example, move or deflect along the seal module 100 in the relaxed open configuration. For example, if the actuating members 55 were flexible, and Schaffer's stasis valve 10 was tilted when the actuator buttons 261 were actuated (e.g., without the actuator buttons 261 positioned to be depressed perpendicular to gravity), a POSITA would understand that the actuating members 55 could slide along the seal module 100 and be positioned at a non-orthogonal angle to the actuator buttons 55. In contrast, for example, Figures 31-34 of Schaffer show that the actuating members 55 retain their shape and orientation in the first and second positions.

100. In sum, a POSITA would understand based on Schaffer's description and illustration of the operation of the actuating members 55, its description of the materials and methods of forming the actuating members 55, as well as its description of how its stasis valve is assembled, that the actuating members 55 are rigid rather than flexible. As such, neither of Schaffer's actuating members 55 are a "filament" as claimed in the '921 Patent because they are not

flexible. Therefore, Schaffer does not disclose this feature of Claim 1, 15, and 21 and thus does not anticipate these claims.

101. Despite the substantial disclosure of Schaffer that its actuating members 55 are rigid, Petitioner simply asserts that it "is inaccurate" that Schaffer's actuating members are rigid because "Schaffer does not describe the actuating members as 'rigid,' nor does it contain disclosure suggesting rigidity. (Ex. 1003, ¶79)." Petition, pp. 30-31. Indeed, the operating principle of Schaffer requires controlled, externally applied force by a rigid element to compress the compliant seal member. I disagree based on all the disclosure of Schaffer that suggests rigidity I describe above. And, there is no suggestion in Schaffer that the U-shaped actuating members are rigid.

102. Petitioner's expert, Mr. Thornton, similarly asserts that Schaffer "does not provide any other information that would suggest to a person of ordinary skill in the art that the actuating members are rigid, such as requirements for minimum or maximum dimensions." EX1003, ¶ 79. To the contrary, Schaffer provides the ample disclosure I discuss above that would lead to a POSITA to understand the actuating members 55 are rigid. That Schaffer does not provide minimum or maximum dimensions would not lead a POSITA to think otherwise as, instead for example, a POSITA would understand the

dimensions to be a variable based on the size the valve (e.g., larger dimensions for a larger valve and smaller dimensions for a smaller valve).

103. Mr. Thornton goes even further, stating that "a person of ordinary skill in the art would have understood that Schaffer's U-shaped actuating members would have preferably been formed from a thin, flexible material" to "permit[] the actuating members to conform, as much as possible, to the outer surface of the seal module and tool inserted through the valve." EX1003, ¶ 79. But, a POSITA would not have understood that. Instead, as I explain in further detail below in § VIII.A., in every embodiment Schaffer relies on compression of the highly-compliant seal member 165 that conforms to the shape of a tool inserted through the valve to effect sealing rather than on any actuating members that conform to the shape of the tool. Indeed, Petitioner implicitly admits the point when it relies on the fact that Schaffer's U-shaped actuating members 55 are rigid (and thus would purportedly form gaps and a poor seal) as the supposed motivation to modify Schaffer by replacing the rigid members with the string of Hartley or wire of Eller. Petition, pp. 35, 43. For example, Mr. Thornton's simple graphic reproduced by Petitioner to support its motivation to modify Schaffer in view of Hartley and Eller based on purported "gaps" does not show any such conformance of the actuating members (orange) to the seal module (green)—they are shown as rigid:

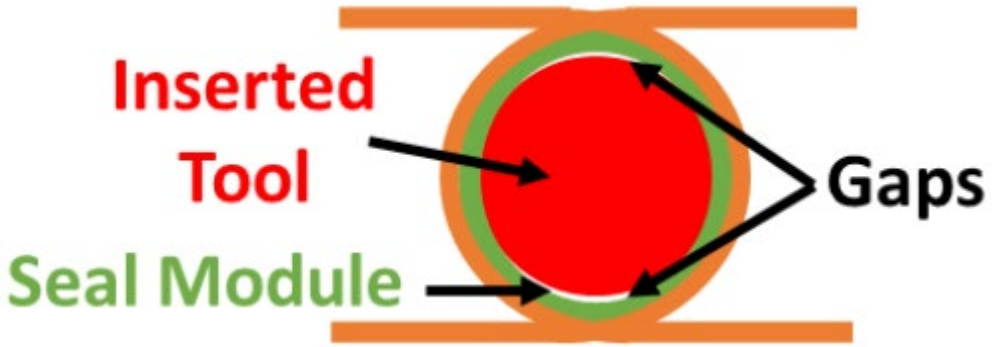

104. Petitioner's expert further asserts that the "description that a device is 'made from machining' is not dispositive of whether the finished product is rigid or flexible" and that "'machining' the part is just 'one option.'" EX1003, p. 41. Schaffer does disclose that the stasis valve 10 is "in one option … made from machining pre-existing amounts of metals and/or plastics." EX1005, ¶ [0082]. But, Schaffer affirmatively discloses that "the actuating member 55 and the actuating button 261" are "machined from aluminum" or "machined from plastic" while other components of the stasis valve 10 like the housing 20, the connecting member 35, and the cap 276 can be "injection molded." *Id*. Even if other manufacturing methods are possible for the actuating members 55, a POSITA would understand based on the totality of Schaffer's disclosure that the actuating members 55 are rigid for the reasons I describe above. Likewise, where Schaffer discloses flexible components, such as the seal module 100, it specifies that those components are flexible. For example, Schaffer makes clear that the seal module 100 includes a "flexible, elongate

tubular structure 101 having an outer wall 27 which includes a material 166 that is highly elastic, deformable, compliant and yet virtually non-compressible." *Id*. at ¶ [0054]. That there is no disclosure in Schaffer of the actuating members 55 being flexible would lead a POSITA to understand that they are rigid.

A. Schaffer Does Not Anticipate Dependent Claim 3 for the Additional Reason that Schaffer Does Not Disclose the "Filament Extend[ing] in a Loop."

105. As I explain above in §V.E. above, the term "filament" requires flexibility. In the Institution Decision (Paper 13), the Board preliminarily concluded "that the evidence supports Patent Owner's position and a POSA would have understood the plain and ordinary meaning of filament as a flexible length of material." Institution Decision, p. 18. Nevertheless, the Board noted that the "flexibility of the filament in the patent's 'bight' embodiments (e.g., as shown in Figures 8 and 9) is not manifestly clear" in contrast to "the '921 patent's loop embodiments (where the filament forms one or more loops like depicted and described in Figures 6–7) [which] require a flexible structure." *Id*. at p. 15.

106. Dependent Claim 3 requires that the "filament extends in a loop" and thus requires flexibility. Because, Schaffer's actuating members 55 are rigid as I

explain above, neither of the actuating members 55 are the claimed "filament."

107. Moreover, neither of those actuating members 55 extend in a loop because they are U-shaped. Petitioner relies upon the bight embodiments in Figures 8 and 9 of the '921 Patent to allege that Schaffer's two U-shaped actuating members "collectively form a loop." Petition, pp. 47-49. But a POSITA would understand that the "loop" embodiments and "bight" embodiments of the '921 Patent are distinct as I explain in §V.A. above. Therefore, any alleged similarities between Schaffer's U-shaped actuating members and the bight embodiments do not support that Schaffer's U-shaped actuating members are loops as Petitioner contends. Moreover, as opposed to the embodiment of Figure 8 and 9 of the '921 having interlocking bights, Schaffer's U-shaped members are side-by-side and thus, even if taken together, do not form a "loop."

B. Schaffer Does Not Anticipate Dependent Claim 10 for the Additional Reason that Schaffer Does Not Disclose the "Second Filament."

108. As I explain above, Schaffer does not disclose the "filament" of independent Claim 1. Dependent Claim 10 further requires:

> [W]herein the actuator is a first actuator, wherein the filament is a first filament, wherein the biasing member is a first

> biasing member, and wherein the active tensioning mechanism further comprises:
>
> a second actuator coupled to the elongate member via a second filament extending at least partially around the elongate member, wherein the second actuator is moveable between (a) a first position wherein the lumen is constricted and sealed and (b) a second position wherein the lumen is at least partially open; and
>
> a second biasing member configured to bias the second actuator to the first position.

Accordingly, Claim 10 requires a second filament and a second actuator like the first filament and the first actuator of Claim 1. For all the same reasons I explain above, Schaffer fails to disclose the "second filament" because Schaffer's U-shaped actuating members are not flexible.

109. Moreover, Petitioner asserts that Schaffer's two actuating members 55 individually constitute the "first filament" and the "second filament" recited in Claim 10. Petition, pp. 65-66. But that interpretation of Schaffer is directly contrary to Petitioner's interpretation of Schaffer for dependent Claim 3 where they allege that Schaffer's two actuating members "collectively form" a single filament loop. *Id*. at pp. 47-49. Even if the "filament" were construed to include rigid structures (which it should not be as I explain above), a

POSITA would not have understood Schaffer's two actuating members to be both a single filament as in Claim 3 ***and*** two filaments as in Claim 10. Indeed, Schaffer effects contained structure closure by "pinching" material between 2 opposing/staggered rigid elements that are physically incapable of forming a "loop." Schaffer is a physically different closure mechanism that simply cannot garrote like a flexible filament(s).

VII. GROUND 2—SCHAFFER DOES NOT RENDER OBVIOUS CLAIMS 1-7, 9-10, 15-18, OR 20-24

110. Petitioner and its expert, Mr. Thornton, allege that Schaffer, if it does not anticipate, renders obvious Claims 1-7, 9-10, 15-18, and 20-24 of the '921 Patent. I disagree for the reasons I discuss in further detail in this section. A POSITA would understand that it would not have been obvious to modify Schaffer to arrive at the features of independent Claims 1, 15, or 21. Therefore, Schaffer does not render obvious those claims. And, because Claims 2-7, 9-10, 16-18, 20, and 22-24 depend from one of independent Claims 1, 15, or 21 and thus include all the limitations from those base claims, those claims are also not rendered obvious by Schaffer.

111. I understand that for a patent claim to be rendered obvious, the differences between the claimed invention and the prior art must be such that the claimed invention as a whole would have been obvious before the effective filing date of the claimed invention to a person having ordinary skill in the art to which

the claimed invention pertains, the claimed invention is obvious. Even if all limitations of a claimed invention are disclosed by the prior art combination, Petitioner must demonstrate an apparent reason to combine the known elements in the fashion of the patent claim at issue and that a person of ordinary skill in the art would have reasonable expectation of success in pursuing that combination. A prior art reference teaches away from a modification of a prior art reference when a person of ordinary skill in the art would be discouraged from following the path set out in the reference, or would be led in a direction divergent from the path followed by and claimed in the patent.

112. Petitioner alleges that "even if Schaffer's lumen were not 'constricted and sealed' by the actuating members in the first position, as claimed in the '921 patent, a POSITA would have found it obvious to modify the actuating members to closely conform to the seal module to constrict and seal the lumen" by, for example, "select[ing] a thin, flexible sheet or flat ribbon of aluminum or plastic to form the actuating members." Petition, pp. 25-26. I disagree.

113. As I explain in §§VI.A. above, Schaffer does not disclose the "filament" recited in Claims 1, 15, and 21. It would not have been obvious to a POSITA to have modified Schaffer to make the U-shaped actuating members thin and flexible because, as I explain in detail in §VIII. below, a POSITA would understand that Schaffer's valve seals completely with or without instruments

inserted therethrough such that there is no motivation to modify Schaffer to make the U-shaped members thin and flexible. Moreover, such a modification would change Schaffer's principles of operation and render Schaffer inoperable for its intended purposes of easy manufacturability, durability, and assembly. Likewise, a POSITA would understand that there are comparably simpler modifications/substitutions to Schaffer's valve that would work (and Petitioner and its expert agree that such modifications would work) to fix any sealing issues in Schaffer (there are none), and that would not depart from Schaffer's principles of operation.

VIII. GROUNDS 3 AND 4—THE COMBINATION OF SCHAFFER AND HARTLEY OR ELLER DOES NOT RENDER OBVIOUS ANY OF CLAIMS 1-7, 9-10, 15-18, OR 20-24

114. Petitioner and its expert, Mr. Thornton, allege that Schaffer in combination with Hartley or Eller renders obvious Claims 1-7, 9-10, 15-18, and 20-24 of the '921 Patent. I disagree for the reasons I discuss in further detail in this section. A POSITA would not have been motivated to or found it obvious to modify Schaffer in view of Hartley or Eller to arrive at the features of independent Claims 1, 15, and 21. Therefore, the combination of Schaffer and Hartley or Eller does not render obvious those claims. And, because Claims 2-7, 9-10, 16-18, 20, and 22-24 depend from one of independent Claims 1, 15, or 21 and thus include all the limitations from those base claims, those claims

are also not rendered obvious by the combination of Schaffer and Hartley or Eller. Schaffer further does not anticipate dependent Claim 10 for the reasons I explain below.

115. As I explained above, I understand that for a patent claim to be rendered obvious, the differences between the claimed invention and the prior art must be such that the claimed invention as a whole would have been obvious before the effective filing date of the claimed invention to a person having ordinary skill in the art to which the claimed invention pertains, the claimed invention is obvious. Even if all limitations of a claimed invention are disclosed by the prior art combination, Petitioner must demonstrate an apparent reason to combine the known elements in the fashion of the patent claim at issue and that a person of ordinary skill in the art would have reasonable expectation of success in pursuing that combination. A prior art reference teaches away from a modification of a prior art reference when a person of ordinary skill in the art would be discouraged from following the path set out in the reference, or would be led in a direction divergent from the path followed by and claimed in the patent.

116. Petitioner argues that a "POSITA would have found it obvious to substitute Hartley's string for Schaffer's two U-shaped actuating members by, for example, attaching the string to one button, wrapping the string around the seal

module, and attaching the string to the second button." Petition, p. 35. Likewise, Petitioner alleges that a "POSITA would have found it obvious to substitute Eller's wire member for Schaffer's two actuating members by attaching one end of the wire to Schaffer's first button, looping the wire around the seal module, and attaching the second end of the wire to Schaffer's second button." *Id*. at pp. 42-43.

117. I disagree that it would have been obvious to have, or that a POSITA would have, substituted Hartley's string or Eller's wire member for Schaffer's U-shaped actuating members 55 for at least the reasons set forth below.

A. Petitioner's Stated Motivations to Modify Schaffer in View of Hartley or Eller Are Based on an Incorrect Understanding of the Sealing Mechanism of Schaffer Which Is Designed to Eliminate Gaps With or Without Instruments Inserted Through the Valve.

118. A POSITA would not have been motivated to modify Schaffer to substitute Hartley's string or Eller's Wire for Schaffer's U-shaped actuating members as in Petitioner's proposed combination because Schaffer expressly discloses and illustrates the ability of its valve to seal completely across a wide range of instruments. Specifically, I disagree with Petitioner's stated motivation to modify Schaffer in view of Hartley ("POSITAs would have recognized that Hartley's string may seal more effectively across a wider range of tool diameters and shapes than Schaffer's U-shaped actuating members") or Eller ("POSITAs would have recognized that Eller's wire may seal more

effectively across more device diameters and shapes than Schaffer's actuating members"). Petition, pp. 36, 43.

119. I also disagree with Petitioners assertion that "Schaffer's actuating members may form small gaps between the valve's seal module and the tool's outer surface" as purportedly shown by Mr. Thornton's simple graphic. *Id.* at p. 36. Petitioner's assertions that substituting Hartley's string or Eller's wire member "could improve upon this potential issue because the string more precisely conforms to the tool diameters and shapes" is based on an incorrect understanding of Schaffer, and more specifically, Schaffer's sealing member 165. *Id.*; EX1003, ¶ 86. A POSITA would understand that small gaps would not form in Schaffer's valve.

120. In short, Schaffer contradicts Petitioner's purported motivations to have substituted Hartley's string or Eller's wire member for Schaffer's U-shaped actuating members. Schaffer recites that "existing devices do not perform a **complete seal** against leakage **in the presence of a wide range of instruments** or in the presence of multiple instruments." EX1005, ¶ [0006] (emphasis added). Schaffer continues that its valve addresses this issue of prior valves, specifically via "a durable stasis valve that **blocks the flow of gas or fluid completely** and immediately **with or without an instrument in place within the gas/fluid path**." *Id.* at ¶ [0008] (emphasis added). Based at least on this

disclosure of Schaffer, a POSITA would understand that Schaffer's valve is explicitly designed to—and does—seal effectively and completely (i.e., without gaps) in the presence of a wide range of different instruments, or without any instruments inserted therethrough.

121. Schaffer expressly discloses and illustrates the ability of its valve to seal completely across a wide range of instruments using a third central seal member 165 that is included in ***every embodiment*** of Schaffer—including the embodiment of Figures 30-34—as I explain above in § V.C.1. For example, Schaffer discloses with respect to Figures 30-34 that the "seal module 100 is formed of one or more seal members, as discussed above" with reference to Figures 1-29 and that (i) in the first sealed position of the valve 10 the "lumen 193 of the third seal member 165 is at least partially collapsed by the compressive force 67" and (ii) in the second unsealed position of the valve 10 the "lumen 193 of the third seal member 165 is able to retract in an unsealed configuration." EX1005, ¶¶ [0075], [0077]. Therefore, Schaffer is clear that the embodiment of Figures 30-34 includes the seal member 165.

122. Schaffer discloses how the third central seal member 165 completely seals, without gaps, around a variety of instruments with reference to Figures 16-19: "the highly compliant third central seal member 165 seals **around a variety of profile shapes 192 and diameters 194 of the lumen 193** when at least one

side of compressive force 67 is exerted upon the central region 195 with respect to the central portion 110 of the containment structure 160":

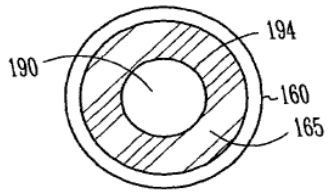

Fig. 16

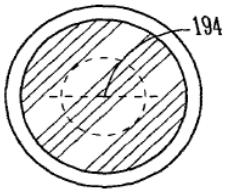

Fig. 17

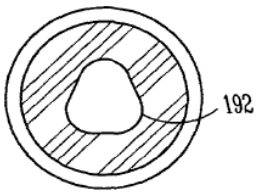

Fig. 18

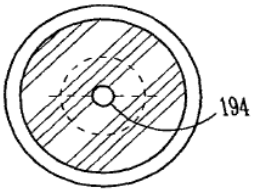

Fig. 19

Id. at ¶ [0060] (emphasis added). The "material 166 of the third central seal member 165 is so compliant that it forms a seal around [multiple instruments 260 [inserted therethrough] even if the instruments 260 are irregularly shaped." *Id*. at ¶ [0068].

123. A POSITA would understand based on the foregoing disclosure of Schaffer that the third central seal member 165—included in the embodiment of Figures 30-34 along with every other embodiment of Schaffer—completely seals without gaps "around a variety of profile shapes 192 and diameters 194 of the

lumen 193" of the third seal member 165 due to, for example, the highly compliant nature of the seal member 165. *Id*. at ¶ [0060]. For example, a POSITA would understand Figure 16 of Schaffer to show the seal member 165 sealing without gaps around a large circular lumen 193, Figure 17 to show the seal member 165 in a sealed state with the lumen 193 completely closed (e.g., without an instrument inserted through the lumen 194), Figure 18 to show the seal member 165 sealing around an irregularly shaped lumen 193, and Figure 19 to show the seal member 165 sealing around a small circular lumen 193.

124. I see that during deposition in an IPR for related U.S. Patent No. 11,697,011, Petitioner's expert Mr. Thornton stated that there would be no need to modify Schaffer's U-shaped actuating members if Schaffer forms a complete seal around various instruments. EX2030, 116:18-117:2. ("If it worked perfectly for all the range of tools, then there probably wouldn't be a need to make adjustments and move to a string-type member.") I agree. And, as I explained above, Schaffer's valve does just that—seal around all the range of tools.

125. Accordingly, a POSITA would not have been motivated to modify Schaffer or to have substituted Hartley's string or Eller's wire member for Schaffer's U-shaped actuating members to form a better seal and avoid the potential formation of gaps because Schaffer expressly discloses and illustrates that its valve performs both of these functions. Mr. Thornton's figure showing

purported gaps is based on an incorrect understanding of Schaffer, and more specifically, the function of the seal member 165.

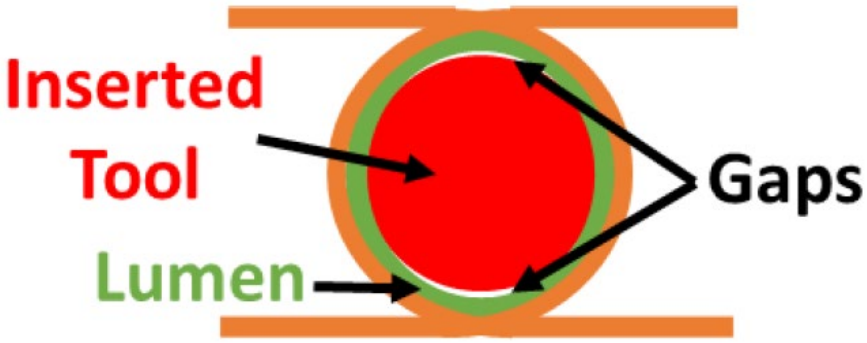

Petition, p. 36. As described above, Schaffer expressly discloses that the seal module 100 including the seal member 165 completely seals around a variety of profile shapes and diameters of the lumen, around small instruments, around large instruments, in the absence of instruments, and even around irregularly shaped instruments:

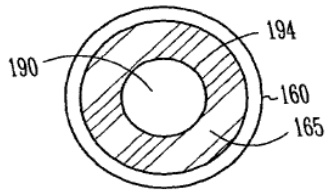

Fig. 16

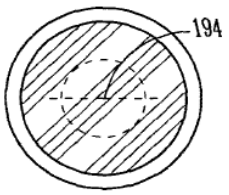

Fig. 17

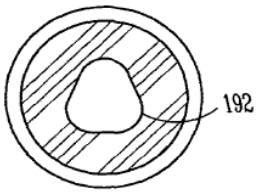

Fig. 18

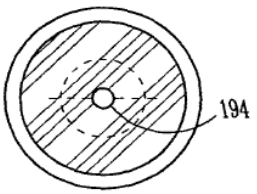

Fig. 19

It does so via compression of the highly-compliant seal member 165 with the rigid actuating members 55.

126. The Petition largely ignores Schaffer's disclosure that its valve would completely seal, specifically how its rigid actuating members 55 operate in conjunction with the seal member 165 to form a complete seal around instruments of different shapes. Petitioner does argue with respect to Patent Owner's similar arguments in the related IPR for related U.S. Patent No. 11,697,011 that "Schaffer's valve would not create gaps … relied on a single embodiment in Schaffer while ignoring other disclosures undermining the argument." Petition, p. 36-37. However, as I explain above and in §V.C.1, Schaffer discloses

that the seal member 165 is included in **every embodiment**, including the embodiment of Figures 30-34. *See*, e.g., EX1005, ¶¶ [0075], [0077] (Schaffer provides with respect to Figures 30-34 that the "seal module 100 is formed of one or more seal members, as discussed above" and that (i) in the first sealed position of the valve 10 the "lumen 193 of the third seal member 165 is at least partially collapsed by the compressive force 67" and (ii) in the second unsealed position of the valve 10 the "lumen 193 of the third seal member 165 is at least partially collapsed by the compressive force 67."). Likewise, Schaffer discloses that in **every embodiment** the seal member 165 is highly compliant to effect a seal around tools of different shapes. *See*, e.g., *id*. at ¶ [0057] ("[t]low friction nature of the first and second seal members 170, 180 is in contrast to the highly deformable and compliant nature of the third central seal member 165"), ¶ [0160] ("the highly compliant third central seal member 165 seals around a variety of profile shapes 192 and diameters 194 of the lumen 193 when at least one side of compressive force 67 is exerted upon the central region 195"), ¶ [0068] ("[t]he material 166 of the third central seal member 165 is so compliant that it forms a seal around the instruments 260 even if the instruments 260 are irregularly shaped").

127. Moreover, I see that in an Institution Decision in an IPR for related U.S. Patent No. 11,697,012 considering similar arguments, the Board found that

Schaffer's disclosure of the "use of certain materials for portions of a seal module that provide 'a nearly fluid/gas tight seal' and 'exhibit[] a 'selfclosing' nature,' … concern only some embodiments, using optional features" and that the "valve of Schaffer's Figures 30–34 does not require a seal module that includes the above-described optional third seal member with an extremely compliant, soft, gelatinous, self-closing material." EX2032, p. 41. Petitioner's expert, Mr. Thornton, similarly contends that "[n]othing in Schaffer suggests that the third valve portion must be made with a 'sticky' or 'gelatinous' substance" because paragraph [0059] of Schaffer discloses "many other materials that would not be 'sticky' or 'gelatinous' that could make up that same portion of the valve." EX1003, ¶ 86. Regardless of whether the sticky, gelatinous, and self-closing material is optional, and as I explain above, Schaffer's Figures 30-34 **do require** the third seal member 165 that is highly compliant to effect sealing under compression (i.e., a POSITA would understand that the seal member 165 that seals is not optional). That is, even if Schaffer discloses embodiments of the third seal member 165 that are not "sticky" or "self-closing," the seal member 165 nevertheless effects a complete seal without gaps due to its highly-compliant nature. In other words, every embodiment disclosed by Schaffer can effect a complete seal by virtue of the third

seal member 165, regardless of whether the third seal member 165 is "sticky" or "gelatinous."

128. In order for Schaffer's valve to form the gaps as alleged by Petitioner and its expert, a POSITA would have to first modify Schaffer's valve to remove the third seal member 165, because as I explained above the presence of the third seal member 165 effects a complete seal. But a POSITA would not have any reason to remove the third seal member 165 because its presence achieves Schaffer's goals of creating a "stasis valve that blocks the flow of gas or fluid completely and immediately with or without an instrument in place" and forming a "complete seal against leakage in the presence of a wide range of instruments or in the presence of multiple instruments." EX1005, ¶¶ [0006], [0008].

129. Further, even assuming that (a) Schaffer discloses using materials that are not sticky or self-closing and (b) the absence of a such a sticky or self-closing material would create gaps (which I disagree agree with for the reasons explained above), neither Petitioner nor its expert Mr. Thornton explain why a POSITA would have substituted Hartley's string or Eller's wire member for Schaffer's U-shaped members rather than simply use the specific sticky and self-closing material taught by Schaffer. As I explain below in §VIII.C., unlike using the specific material taught by Schaffer or adjusting other simple

properties of Schaffer's valve (e.g., spring strength), using Hartley's string or Eller's wire member with Schaffer's valve such a modification would not be a simple substitution. Further, as I explain below in §§VIII.D-E., such a modification would greatly hinder the durability and ease of manufacturing of Schaffer's valve and likely render Schaffer's valve inoperable. Therefore, in this scenario, a POSITA would have been motivated to use the sticky and self-closing material taught by Schaffer—which Schaffer expressly discloses can provide a complete seal around a wide variety of instruments—rather than completely redesign Schaffer's valve in view of Hartley or Eller.

130. Moreover, Petitioner's proposed combination could actually seal less effectively (and would not seal any more effectively than Petitioner's allegedly defective Schaffer valve without the seal member 165) around multiple instruments inserted through Schaffer's valve and/or when an instrument is irregularly shaped—scenarios for which Schaffer's valve is specifically designed to form a seal as I explain above. For example, if two circular instruments were inserted side-by-side through Schaffer's seal module, Hartley's string or Eller's wire member in Petitioner's combination (which removes the sealing properties of Schaffer's seal member 165 in order to manufacture a motivation to substitute Hartley or Eller) would be unable to seal the space

(e.g., gaps/divots) between the instruments in Petitioner's combination as I demonstrate below:

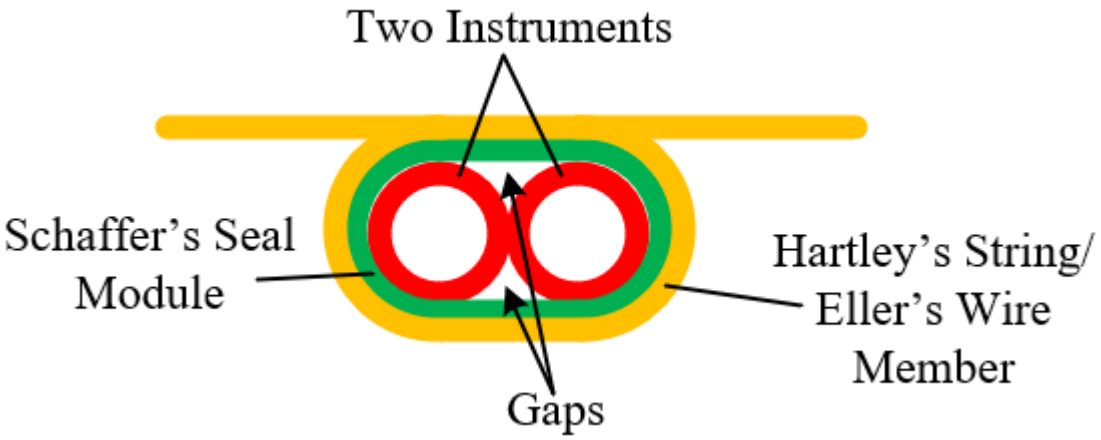

Thus, a POSITA would not have had a reasonable expectation of success at achieving Schaffer's goal—"a durable stasis valve that blocks the flow of gas or fluid completely and immediately with or without an instrument in place," including "**in the presence of a wide range of instruments or in the presence of multiple instruments**"—by modifying Schaffer's valve to include Hartley's string or Eller's wire member. EX1005, ¶¶ [0006] and [0008] (emphasis added). In contrast, Schaffer's sealing member 165 is designed to seal when multiple instruments are inserted through the valve, and thus a POSITA would have reasonably expected Schaffer's disclosed designs to achieve this goal. *Id*. at ¶ [0068]. A POSA would have simply utilized Schaffer's design including the seal member 165 to prevent gaps.

131. For the foregoing reasons, Petitioner's assertion that a POSITA would have been motivated to substitute Hartley's string or Eller's wire member for Schaffer's U-shaped actuating members to seal more effectively and avoid the formation of small gaps is contradicted by Schaffer. Schaffer discloses a valve that addresses the then-existing need for complete sealing around a variety of instruments and specifically describes how the valve is configured to achieve such complete sealing by compression of the highly-compliant seal member 165 included in every embodiment of Schaffer. There was no need to change the sealing mechanism in Schaffer based on Schaffer's disclosure. Schaffer's structure is not deficient and would not leave gaps in the seal.

132. Mr. Thornton provides additional reasons why it would have been obvious to a POSITA to have substituted Harley's string or Eller's wire member for Schaffer's U-shaped actuating members in paragraph 86 of his declaration. EX1003, ¶ 86. I disagree with those reasons.

133. First, Mr. Thornton alleges that "Hartley's flexible string may better conform to varying diameters or shapes of tools inserted into the valve than Schaffer's U-shaped actuating members." *Id*. But, again, Schaffer's highly-compliant seal member 165 is specifically designed to conform to varying diameters and shapes of tools as shown in Figures 16-19. A POSITA would understand that there is simply not a need for the actuating members 55 to conform to a tool—

and would not have so modified the actuating members—because the seal member 165 effectively conforms to the shapes of various tools to seal.

134. Second, Mr. Thornton attempts to support his argument that it would have been obvious to substitute Hartley's string or Eller's wire member for Schaffer's U-shaped actuating members to "seal more effectively" by stating that "even Schaffer recognizes it may not form a complete seal with the 'gelatinous' and 'sticky' valves identified by Patent Owner, stating the valves form a '***nearly*** fluid/gas tight seal'" in paragraph [0059] of Schaffer. *Id*. However, Mr. Thornton's analysis of Schaffer's disclosure omits the remainder of the citation which concludes that the "material 166 exhibits a 'selfclosing' nature in that it sticks occlusively to itself forming a nearly fluid/gas tight seal under very light compression." EX1005, ¶ [0059] (emphasis added). A POSITA would understand that the material 166 of the seal module 100 can form a nearly fluid/gas tight under very light compression, but would also understand that the compressive force 67 provided by the rigid actuating members 55 and springs 210 of Schaffer's valve 10 shown in Figures 31-34 would provide sufficient compression to the seal module 100, effecting a complete fluid/gas tight seal. *Id*. at ¶ [0077]. Indeed, as I explained in detail above, Schaffer expressly discloses that the purpose of the valve 10 is to "block[] the flow of

gas or fluid **completely** and immediately with or without an instrument in place within the gas/fluid path." *Id*. at ¶ [0008].

135. Third, Mr. Thornton alleges that "Schaffer makes clear that the valves in Figures 31-34 do not require the third portion stating: 'The seal module 100 is formed of one or more seal members, as discussed above'" in paragraph [0075] of Schaffer. EX1003, ¶ 86. But, as I explain above in §V.C.1., every embodiment of Schaffer does require the third seal member 165. Indeed, Mr. Thornton's conclusion ignores that Schaffer expressly discusses the third central seal member 165 in combination with Figures 31-34 at, for example, paragraph [0081]. EX1005, ¶ [0081]. Accordingly, a POSITA would understand that seal module 100 in Figures 31-34 of Schaffer includes the third seal member 165. Finally, Mr. Thornton alleges that "a person of ordinary skill in the art would have recognized that the 'sticky' or 'gelatinous' materials would not work well with the seal modules disclosed in Figures 31-34 because those seal modules must 'retract to an uncollapsed configuration' when the tension on the module is released by the actuating members … [a] seal module made of the 'sticky' or 'gelatinous' materials would not easily return to its uncollapsed configuration." EX1003, ¶ 86. To the contrary, a POSITA would understand Schaffer's U-shaped actuating members 55 to be rigid such that they "**forcibly disengage** opposing outer walls 27 of the seal module 100 allowing

the portion 108 of the containment structure 160 to retract to an uncollapsed configuration where gases and fluids can pass therethrough." EX1005, ¶ [0077] (emphasis added). That is, the seal module 100 can open with any of the disclosed materials because the actuating member 55 disengage the seal module 100 to remove all compressive force.

B. Petitioner and Its Expert Assert that Schaffer's Valve Forms a Complete Seal and Prevents Leaks, Even When Instruments are Inserted Therethrough.

136. As I explain in detail above in §VIII.A., Schaffer discloses that its valve seals completely with or without instruments inserted therethrough such that no gaps would form, and details the specific mechanisms and properties of its seal module that enable such complete sealing. Petitioner and its expert, Mr. Thornton, nevertheless assert that a POSITA would have been motivated to modify Schaffer or substitute Schaffer's U-shaped actuating members with Hartley's string or Eller's wire member to "seal more effectively" and avoid the formation of "small gaps." Petition, pp. 36, 43. Not only is this incorrect as I explain above, Petitioner and its expert concede at other times that Schaffer's valve forms a complete seal—even when instruments are inserted therethrough—contradicting Petitioner's stated reason to modify Schaffer.

137. For example, in the IPR in related U.S. Patent No. 11,697,011 Petitioner's expert stated at deposition that there would be no need to modify Schaffer's

U-shaped actuating members if Schaffer forms a complete seal around various instruments. EX2030, 116:18-117:2. ("If it worked perfectly for all the range of tools, then there probably wouldn't be a need to make adjustments and move to a string-type member.")

138. Also, Petitioner and its expert acknowledge that "Schaffer discloses a hemostasis valve for use with catheters 'that blocks the flow of gas or fluid completely and immediately with or without an instrument in place within the gas/fluid path.' (Ex. 1005, [0002], [0008].)" Petition, p. 21; EX1003, ¶61. Moreover, when describing why Schaffer anticipates dependent Claim 5, Petitioner states:

> All hemostasis valves, including Schaffer's valve, are designed to remain closed against the pressure differential between the blood pressure and the air pressure. (Ex. 1003, ¶124.) **If Schaffer's valve did not remain closed, blood would leak out of the catheter and the valve would not be a "hemostasis" valve (i.e., a valve that stops blood loss)**. (*Id*., ¶¶124-127.) Yet, Schaffer's valve blocks "the flow of gas or fluid" during such medical procedures and, therefore, remains closed when a pressure differential exists between the two ends of the valve. (*Id*.; Ex. 1005, Abstract, [0008], [0077].)

Petition, pp. 54-55 (emphasis added); *see also* EX1003, ¶¶ 124-125.

139. Accordingly, Petitioner and Mr. Thornton acknowledge, at least when it suits them, that Schaffer discloses that its valve completely seals with or without an instrument in place, and then go on to state that if Schaffer's valve did not remain sealed it would not be a "hemostasis valve." This is completely contrary to Mr. Thornton's and Petitioner's stated motivations for substituting Schaffer's U-shaped actuating members with Hartley's string or Eller's wire member to "seal more effectively" and avoid the formation of "small gaps." If a POSITA would have expected that Schaffer's valve would prevent leaks during operation, a POSITA would **not** have understood that Schaffer's valve seals ineffectively or that small gaps (i.e., leak paths) would form (Petitioner's stated motivation to combine Hartley or Eller with Schaffer). That is, Petitioner's stated motivations including the formation of "gaps" and ineffective sealing are contradicted by their statements and their expert's statements that Schaffer's valve does not leak and seals completely.

140. Likewise, Petitioner states the "purpose of Schaffer's valve is to prevent leaks when a catheter is inserted into a patient, including aspiration catheters" and that Schaffer "discloses that its valve prevents leakage across 'a range of instruments,' such as 'a catheter, guidewire, needle, or fiber.'" Petition, pp. 59, 62. Again, a POSITA would have understood Schaffer's valve to prevent leaks around an instrument inserted through the valve, so a POSITA would

not have understood that small gaps (i.e., leak paths) would form (Petitioner's stated motivation to combine Hartley or Eller with Schaffer).

141. Accordingly, Petitioner and its expert acknowledge that Schaffer discloses that its valve completely seals with or without an instrument in place to prevent blood loss. This is contrary to Petitioner's stated motivations for substituting Schaffer's U-shaped actuating members with Hartley's string or Eller's wire member to "seal more effectively" and avoid the formation of small gaps." That is, Petitioner's stated motivations are contradicted by its own and Mr. Thornton's statements that Schaffer's valve blocks the flow of gas or fluid completely and forms a seal about a instrument inserted through the valve.

C. Petitioner's Proposed Substitution of Hartley's String or Eller's Wire Member for Schaffer's U-Shaped Actuating Members is Not a Simple Substitution of One Known Element for Another.

142. A POSITA would not have found it obvious to have substituted Hartley's string or Eller's wire member for Schaffer's U-shaped actuating members because neither Schaffer, Hartley, nor Eller disclose a "filament" connected at opposite ends to two actuators as proposed in Petitioner's combination. That is, Petitioner's proposed combinations do not involve the substitution of a known element for another but, instead, a new construction that differs from the arrangements taught by Schaffer, Hartley, and Eller.

143. Petitioner contends that in its proposed combination the first end of Hartley's string would be secured to Schaffer's first actuator button, Hartley's string would wrap around Schaffer's seal module, and the second end of Hartley's string would be secured to Schaffer's second actuator button. Petition, pp. 35-39. Petitioner provides the following demonstrative illustration to illustrate the proposed substitution:

Demonstrative Illustration
Schaffer + Hartley's String

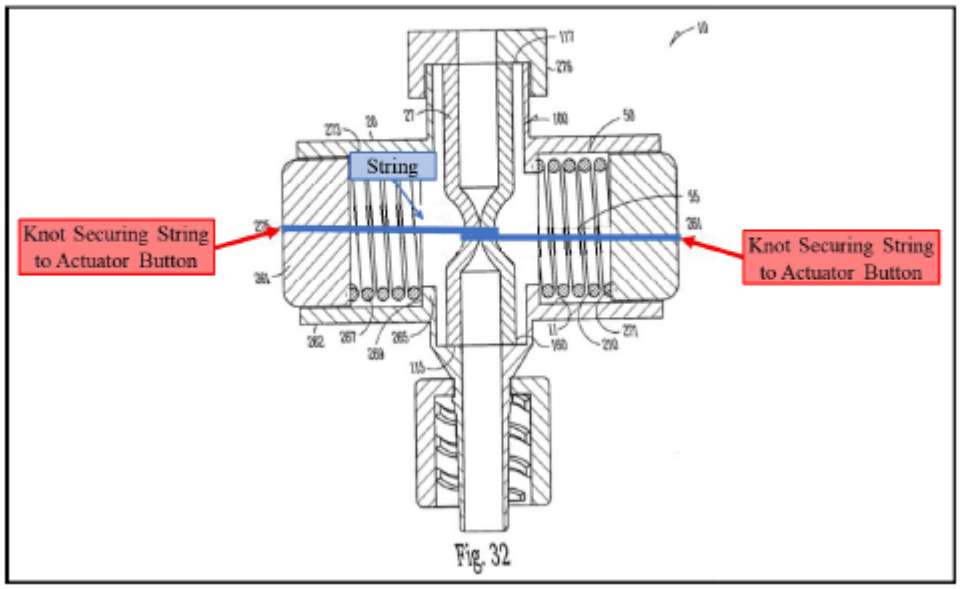

Id. at p. 38. Petitioner's proposed combination of Schaffer and Eller identically positions Eller's wire member to be attached at opposite ends to both actuator buttons of Schaffer and to loop around Schaffer's seal module:

Demonstrative Illustration
Schaffer + Eller's Wire Member

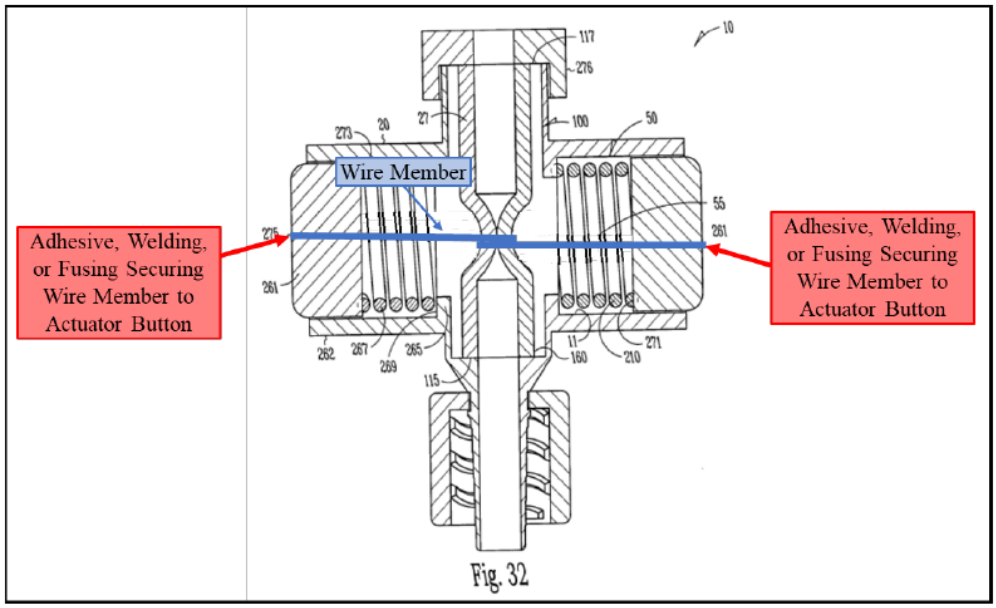

Id. at pp. 43-44.

144. Accordingly, Petitioner's proposed substitution requires eliminating the two U-shaped actuating members of Schaffer and replacing them with a single actuating member (Hartley's string or Eller's wire member) and attaching opposite ends of Hartley's string or Eller's wire member to the two different actuator buttons 261 of Schaffer that can independently manipulate each end of the same string or wire. But Schaffer, Hartley, nor Eller disclose such an arrangement. Each controls a single or multiple members with a single actuator.

145. For example, in Schaffer each of the actuating members 55 is attached to only one of the actuator buttons 261 such that movement of a single one of the

actuator buttons 261 controls movement of a single one of the actuating members 55. Such a configuration is required because Schaffer's members are rigid, and could not function if a single member was attached to two separate in independently operable buttons.

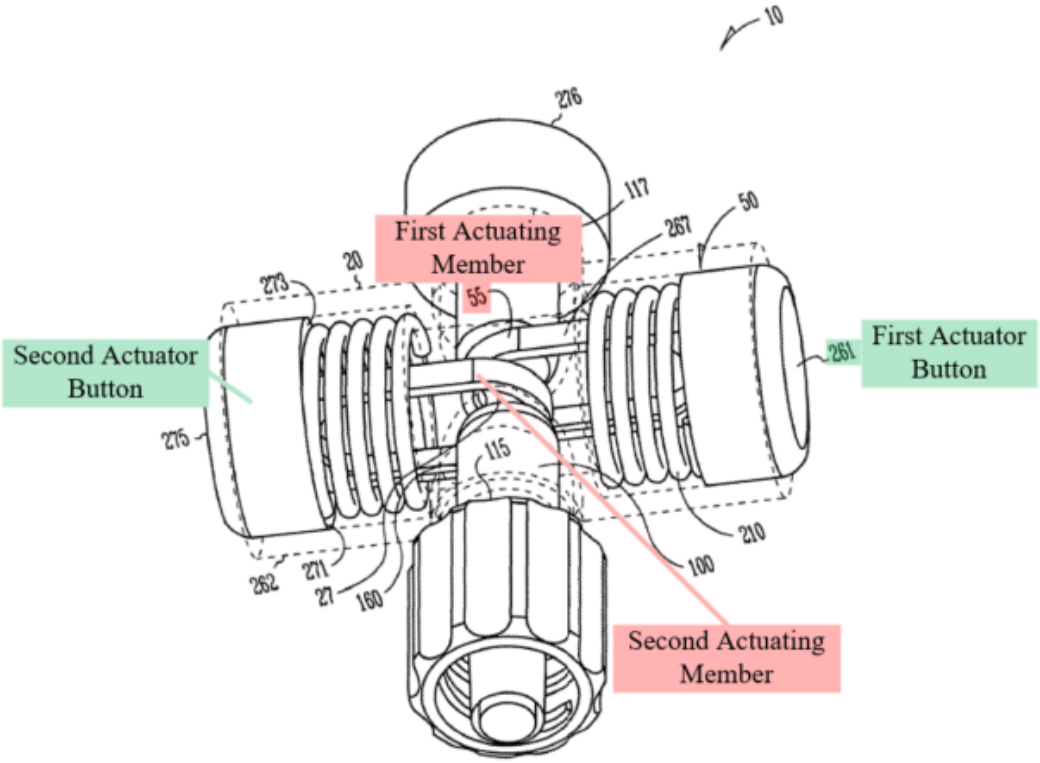

Fig. 31

146. Hartley discloses an access valve having a string 14 extending around a cylindrical elastomeric diaphragm 8 and attached by knots 16 and 18 at each end to a **single** rotary actuator 12 that controls movement of both ends of the string 14:

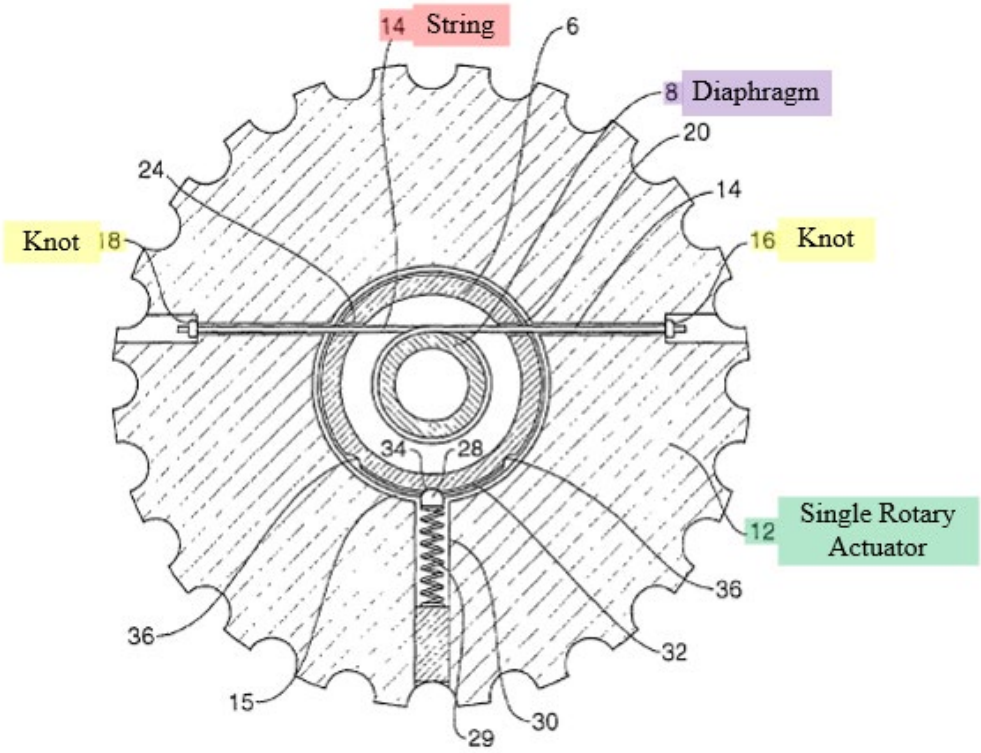

Fig 3

EX1006, ¶ [0031]. Rotation of the rotary actuator 12 pulls each end of the string 14 precisely the same amount. That is, movement of the string 14 is precisely controlled by the rotary actuator 12 such that the string 14 moves a predictable amount with movement of the actuator 12—neither end of the string 14 can move without the exact same and equal movement of the other end of the string 14.

147. Figures 1-10C of Eller illustrate a "selective fluid barrier valve device 10 that has … a housing 16, an actuator 18, a sleeve 20, a first wire member 22, a second wire member 24, [and] a third wire member 26:"

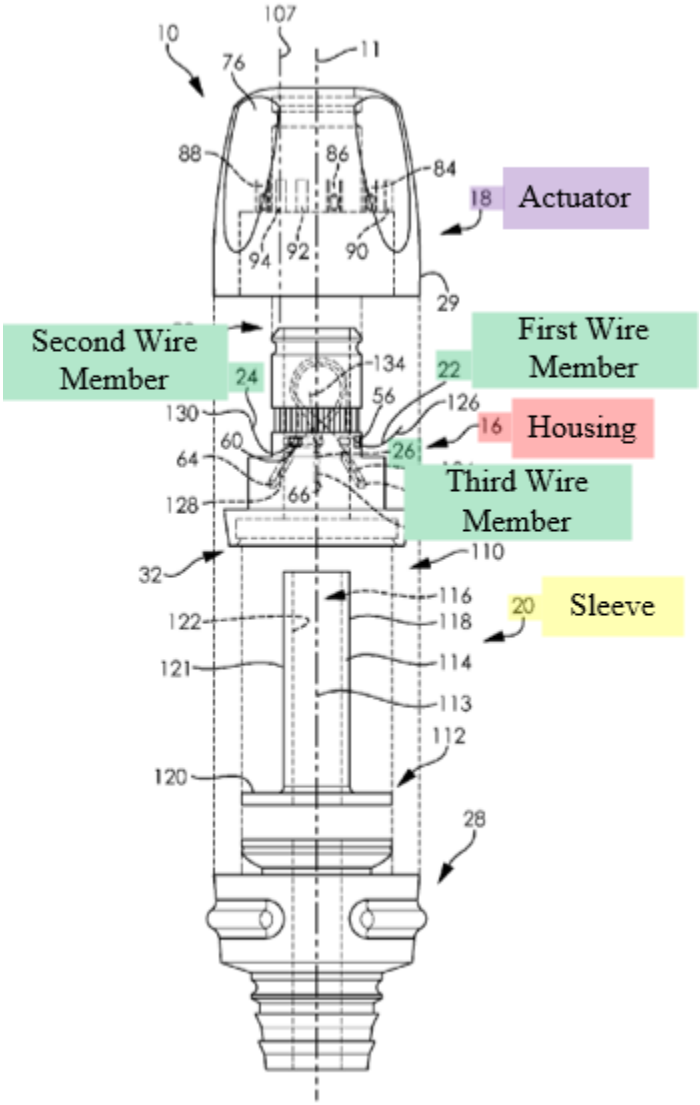

FIG. 2

EX1007, 5:2-6. As conceded by Petitioner, the "wire member has a first end 124 attached to the housing 16 and a second end 126 attached to the actuator 18." Petition, pp. 41-42; EX1007:12:52-58. The second wire member 24 and the third wire member 26 likewise have a first end attaching to the housing 16 and a second end attached to the actuator 18. EX1007, 12:21-14:27. Rotation of the actuator 18 acts to pull the second end of each the first, second, and

third wire members 22, 24, and 26 to tension the wire members to compress the sleeve 20. *Id*. at 15:21-40 & 17:38-18:8.

148. Similarly, Figures 20-22 of Eller illustrate a selective fluid barrier device 810 including a housing 816, an actuator 818, a sleeve 820, and a single first wire member 822 having "a first end 924 attached to the housing 816 … and a second end 926 attached to the actuator 818":

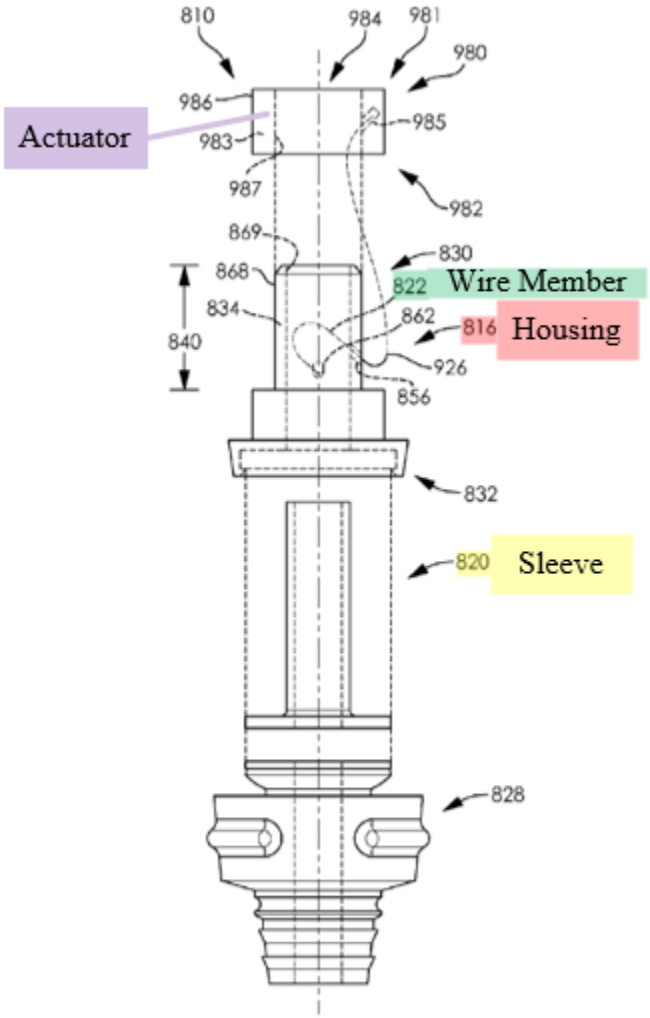

FIG. 20

Id. at 23:50-62 & 24:50-52. Movement of the actuator 818 pulls the second end 926 of the wire member 822 to tension the wire member 822 and compress the sleeve 820. *Id*. at 24:58-25:2.

149. Figures 15-17 illustrate a selective fluid barrier device 410 including a housing 416, an actuator 418, a sleeve 420, and a single first wire member 422 having "a first end 524 attached to the actuator 418 within the first cavity 490 and a second end 526 attached to the first wire member 422":

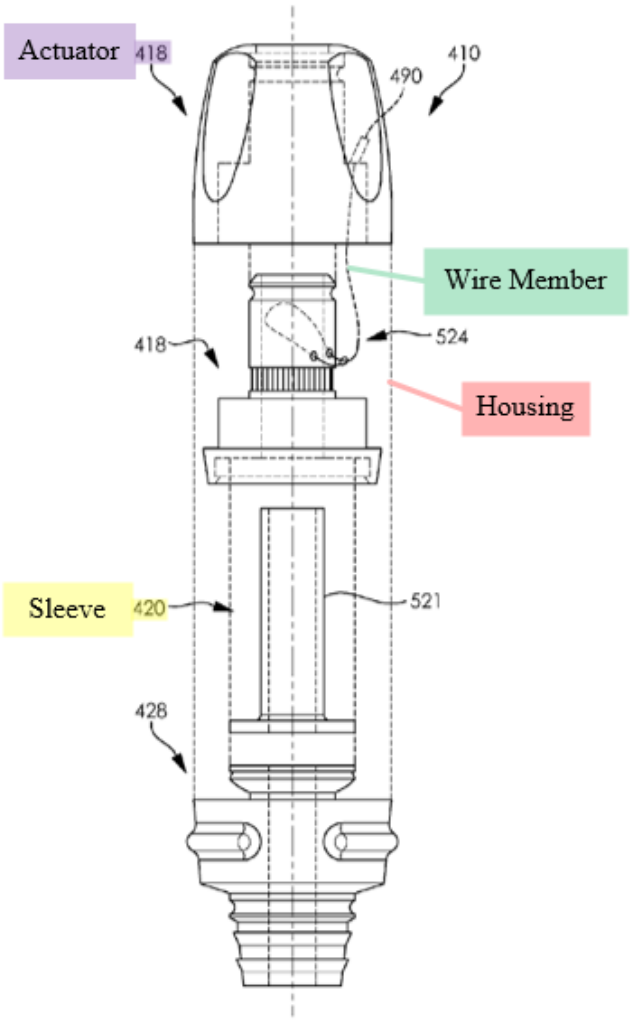

FIG. 15

Id. at 21:37-67. Rotation of the actuator 418 pulls the second end 526 of the wire member 422 to tension the wire member 422 and compress the sleeve 420. *Id*. at 22:25-31.

150. Thus, in each of Eller's various selective fluid barrier devices, the various wire members have a first end coupled to either a housing of the selective fluid barrier device or to the wire member and a second end coupled to an actuator of the selective fluid barrier device. Movement (e.g., rotation) of the actuator pulls only the second end of the wire member while the first end remains stationary to tension the wire member. That is, movement of the single actuator controls movement of the wire member such that the string moves predictably and a precise amount upon movement of the actuator.

151. While Petitioner proposes a purported simple substitution of Hartley's string or Eller's wire member for Schaffer's U-shaped actuating members, Petitioner's proposed combination not only substitutes a flexible string or wire member for Schaffer's rigid U-shaped members, but also redesigns Schaffer to eliminate one rigid U-shaped member completely and instead attach a single flexible string/wire member to two actuator buttons, an arrangement not found in Schaffer, Hartley, or Eller. Moreover, in Petitioner's proposed combinations of Schaffer and Hartley or Eller, Hartley's string 14 and Eller's wire

member would be controlled by Schaffer's two actuator buttons 261—rather than by a single actuator as taught by Hartley or Eller.

152. Accordingly, it is incorrect that the "combination of Hartley's string and Schaffer's valve would merely entail substituting of one known element (Hartley's string) for another (Schaffer's actuating members) to yield the predictable results of sealing Schaffer's valve" or that the "combination of Eller's wire member and Schaffer's valve would merely entail substitution of one known element (Eller's wire member) for another (Schaffer's two actuating members) to yield the predictable results of constricting Schaffer's valve." Petition pp. 35-36, 43. Instead, Petitioner's proposed combination requires significant additional modification and departs from the intended purpose and express disclosure of each of Schaffer, Hartley, and Eller in which a **single** U-shaped actuating member 55, string 14, or wire member, respectively, are controlled by a **single** actuator.

153. A POSITA would understand that controlling a string, wire member, or actuating member with two independently movable actuators would increase the complexity and variability of the valve and make the valve more difficult to manufacture. For example, Hartley and Eller—the only references that disclose a flexible member—disclose methods that include precise control over a flexible member by controlling the movement of that flexible member with

a single movable actuator such that the movement of the flexible string/wire member is precisely controlled and moves an equal amount upon actuation of that actuator. In Petitioner's combination, the movement of the string/wire member would not be precisely controlled by one actuator as either of Schaffer's buttons could be depressed independently—meaning the amount of movement of the string is unpredictable based on the movement of one button. Accordingly, neither Schaffer, Hartley, nor Eller disclose any element (U-shaped actuator, string, or wire member) coupled to separate, individually controlled actuator buttons as in Petitioner's proposed combination. If anything, Petitioner's proposed combinations appear to be based on hindsight in view of the '921 Patent.

154. I understand that the Board stated in an Institution Decision regarding related U.S. Patent No. 11,697,012 that "Schaffer's two actuating members apply a constricting force to the valve's seal module when pulled by opposing spring-actuated buttons," and that "replacing those members with a single string (or wire) would provide substantially the same function." EX2032, p.39. However, even if it were true that Petitioner's proposed combination would provide "substantially the same function" as Schaffer's valve seal module, this alone does not mean that it would have been simple to redesign Schaffer's valve to accommodate Hartley's string or Eller's wire member. This is

because there are many design considerations that a POSITA would need to contemplate if they had been motivated to redesign Schaffer's valve seal module. As I explain below in § VIII.D.-E, several of these design considerations—including the durability of the valve and the ease of manufacturing the valve—mean that it would not have been simple to have redesigned Schaffer's valve to accommodate Hartley's string or Eller's wire member. This is not to say that no modification could be made to Schaffer. For example, as I explain below in § VIII.F., there are simple modifications that a POSITA could make to Schaffer that could resolve Petitioner's alleged shortcomings of Schaffer—but these simple modifications do not include incorporating Hartley's string or Eller's wire member into Schaffer's valve seal module.

D. Modifying or Substituting Hartley's String or Eller's Wire Member for Schaffer's U-Shaped Actuating Members Would Render Schaffer's Valve Inoperable for Its Intended Purposes of Durability and Easy Manufacturing.

155. It also would not have been obvious to a POSITA to substitute Hartley's string or Eller's wire member for Schaffer's U-shaped actuating members because doing so would make Schaffer's valve less durable and more difficult to manufacture. In particular, Schaffer's U-shaped actuating members 55 are purposefully designed to be rigid and attached to only a single actuator to simplify manufacturing and make the valve durable.

156. Regarding manufacturability, Petitioner contends that in its proposed combination the first end of the Hartley's string or Eller's wire member would be secured to Schaffer's first actuator button, the string would wrap at least once around Schaffer's seal module, and the second end of the string or wire member would be secured to the second actuator button. Petition, pp. 38, 44 (Petitioner's Demonstrative Illustrations showing the proposed combination of Schaffer and Hartley and Schaffer and Eller, respectively). As Petitioner explains with respect to Hartley, "end of Hartley's string could be threaded through small holes drilled or otherwise created in Schaffer's buttons and knotted on the other side." *Id*. at 37. This purported arrangement is speculative and would remove the advantages Schaffer identifies its structure as providing.

157. Schaffer specifically describes how its stasis valve is assembled:

> [T]he stasis valve 10 is assembled by inserting the actuator button 261 and resilient member 267 (e.g., spring 210) into one side of the housing 20. The actuator button 261 and resilient member 267 (e.g., spring 210) are inserted into an opposing side of the housing 20. Each actuator button 261 is completely compressed and held while the seal module 100 is inserted through the housing 20 and between each actuator 50. Each actuator button is released and the cap 276 secured to the housing 20, for example, with an adhesive. Further, the connecting member 35 is snapped onto the housing.

EX1005, ¶ [0083]. That is, a POSITA would understand that each of the actuator buttons 261 and the springs 210 are inserted into the cylindrical opening

defined by a corresponding one of the cylindrical interior walls 11 of the housing 20 until the springs 210 abut the inner flange wall 265, then the actuator buttons 261 are depressed to form an opening through the U-shaped actuating members 55 (similar to forcible disengagement), and finally the seal module 100 is inserted through the opening:

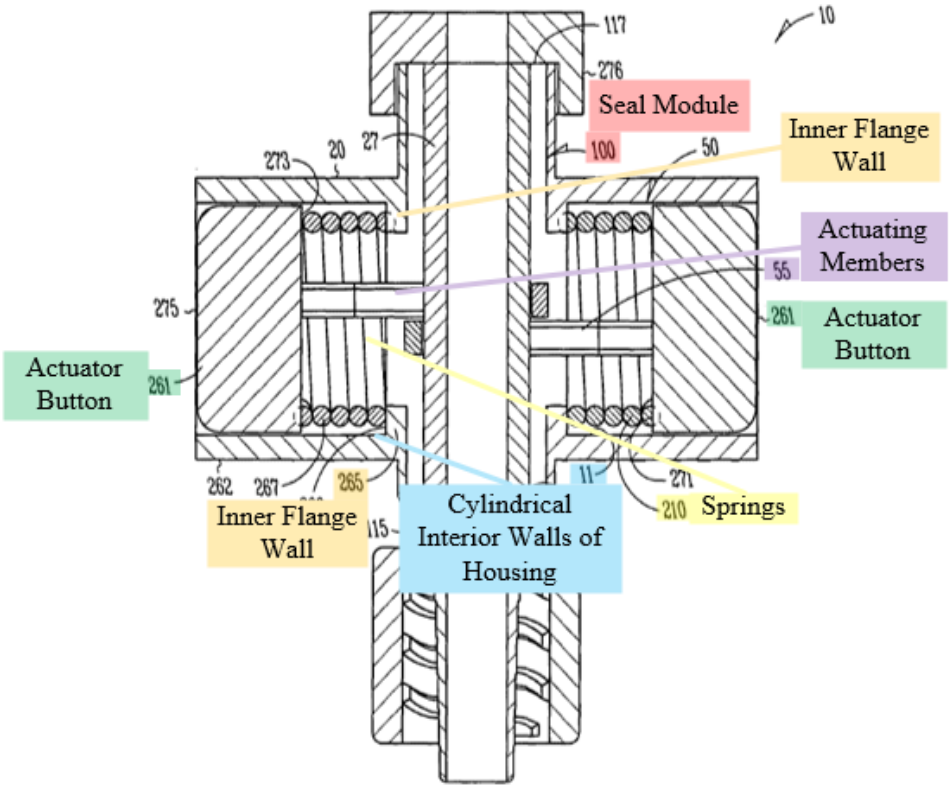

Fig. 34

Thereafter, the actuator buttons 261 and the actuating members 55 are retained within the cylindrical openings—even when the actuator buttons 261 are not depressed—by the resistive force of the seal module 100 against the U-shaped actuating members 55.

158. A POSITA would understand that Petitioner's proposed substitution of Hartley's string or Eller's wire member for Schaffer's actuating members 55 would make it more difficult to assemble Schaffer's valve in the simple manner taught by Schaffer using rigid actuating members 55. In particular, in Petitioner's proposed combination of Schaffer and Hartley, the first end of Hartley's string is secured via a knot to one of Schaffer's actuator buttons 261 and the second end of Hartley's string is secured via a knot to the other one of Schaffer's actuator buttons 261. Petition, pp. 35-38. Similarly, in Petitioner's proposed combination of Schaffer and Eller, the first end of Eller's wire member is secured via "simple methods" such as adhesive, welding, or fusing to one of Schaffer's actuator buttons, and the second end of Eller's wire member is secured via a similar method to the other one of Schaffer's actuator buttons 261. Petition, pp. 43-44. A POSITA would understand that to achieve this arrangement Hartley's string or Eller's wire member would either need to be (1) secured to the actuator buttons 261 before the actuator buttons 261 are inserted into the cylindrical openings in the housing 20 or (2) secured to the actuator buttons 261 after the actuator buttons 261 are inserted into the cylindrical openings.

159. However, the first method of assembly in which Hartley's string or Eller's wire member is secured to the actuator buttons 261 before their assembly into

the valve would not be possible because the tethered actuator buttons 261 could not be inserted through the respective cylindrical openings on either side of the housing 20 while also positioning Hartley's string or Eller's wire member as alleged by Petitioner. Put differently, the inner flange wall 265 would prevent either of Schaffer's actuator buttons 261 from passing entirely through the housing 20 as would be required to position Hartley's string or Eller's wire member around Schaffer's seal module 100 in Petitioner's combination.

160. Likewise, a POSITA would understand the second method of assembly in which Hartley's string or Eller's wire member is secured to the actuator buttons 261 after their assembly into the valve to be unduly difficult, because the housing 20 and the actuator buttons 261 would block access to the interior of the housing 20 and inhibit or even prevent the positioning of Hartley's string or Eller's wire member in Petitioner's combinations. That is, with the actuator buttons 261 inserted into the cylindrical openings in the housing 20, the interior of the housing 20 would be inaccessible for manipulating Hartley's string or Eller's wire member into position around the seal module 100.

161. Even if the first or second method of assembly was somehow workable, Schaffer teaches that the "[e]ach actuator button 261 is completely compressed and held while the seal module 100 is inserted through the housing 20

and between each actuator 50." EX1005, ¶ [0083]. Hartley's flexible string and Eller's flexible wire member would not be tensioned (e.g., loose) when the actuator buttons 261 are compressed in Petitioner's proposed combinations such that it would not provide a uniform opening like Schaffer's rigid actuating members 55 to permit positioning of the seal module 100 therethrough.

162. Petitioner's expert asserts that "a tapered fixture could be used to introduce a folded/collapsed seal module through the looped strings that are already attached to the buttons" or "[a]lternatively, the seal module could be positioned in the valve before the strings were looped around the module and connected to the buttons." EX1003, ¶ 87. The inherent floppiness/flexibility of the string would render its relaxed geometry uncontrollable, resulting in non-orthogonal positioning around the seal module. And, even if these methods were possible, Schaffer does not disclose such methods further confirming that the U-shaped members are rigid. Moreover, if a looped string were attached to the actuator buttons before the seal module was inserted, nothing would retain the loop in the string. Instead, because the string is flexible, the string would simply slacken in an uncontrolled manner and there would be no "loop" to target with the tapered fixture. And even if there was some way to ensure the loop was maintained, the loop would not have a predefined position

that could be targeted by the tapered fixture. Rather, the looped string would move in an uncontrolled manner that would make it difficult to reliability insert a tapered fixture therethrough.

163. In sum, a POSITA would recognize the advantage of Schaffer's design when it comes to ease of assembly. Namely, each of the actuator buttons 261 is attached to a single one of the actuating members 55 to allow these individual components to be inserted into the cylindrical openings on either side of the housing 20. Tethering the actuator buttons 261 together with Hartley's string or Eller's wire member would unduly complicate this simple assembly process.

164. Accordingly, for the foregoing reasons, a POSITA would understand that Petitioner's proposed substitution of Hartley's string or Eller's wire member for Schaffer's actuating members 55 would make it much more difficult or even impossible to assemble Schaffer's valve in the simple manner taught by Schaffer.

165. Moreover, as I explain in §VI.A. above, a POSITA would understand that flexible parts—such as Hartley's string or Eller's wire member—would be difficult or impossible to machine conventionally, as flexible materials will deform when force is applied during the machining process. This would inhibit or even prevent accurate manufacturing of Hartley's string or Eller's

wire member using machining as taught by Schaffer. Accordingly, a POSITA would understand that replacing Schaffer's actuating members with Hartley's string or Eller's wire member would make Schaffer unsuitable for its intended purpose of simple manufacturability via machining.

166. Regarding durability, Schaffer explains that its invention addresses the then-existing need for "a **durable stasis valve** that blocks the flow of gas or fluid completely and immediately with or without an instrument in place within the gas/fluid path." EX1005, ¶ [0008] (emphasis added). Accordingly, a POSITA would understand durability, such as the ability to resist damage during operation, is a key feature of Schaffer's device. As I explain in §VI.B. above, Schaffer's actuating members 55 are rigid and "machined from aluminum" or "machined from plastic." *Id*. at ¶ [0082]. A POSITA would understand that replacing Schaffer's actuating members 55 with Hartley's string 14 or Eller's wire member would make Schaffer's valve less durable—in direct contrast to Schaffer's intended purpose of having a durable valve. In particular, a POSITA would understand Hartley's thin and flexible string and Eller's thin and flexible wire member to be much more susceptible to damage, positioning errors, and the like during valve operation.

E. Modifying or Substituting Hartley's String or Eller's Wire Member for Schaffer's U-Shaped Actuating Members Would Change the Principle of Operation of Schaffer's Valve in Which the U-

Shaped Actuating Members Forcibly Disengage the Seal Module and Likely Render Schaffer's Valve Inoperable.

167. It also would not have been obvious to a POSITA to substitute Hartley's string or Eller's wire member for Schaffer's U-shaped actuating members because doing so would change the stated principle of operation of Schaffer's valve in which the U-shaped actuating members 55 forcibly disengage the seal module 100.

168. In the second (open) position of Schaffer's valve, "each actuator button 261 is depressed" and "[s]uch movement allows each engaged actuating member 55 to **forcibly disengage** opposing outer walls 27 of the seal module 100 allowing the portion 108 of the containment structure 160 to retract to an uncollapsed configuration where gases and fluids can pass therethrough":

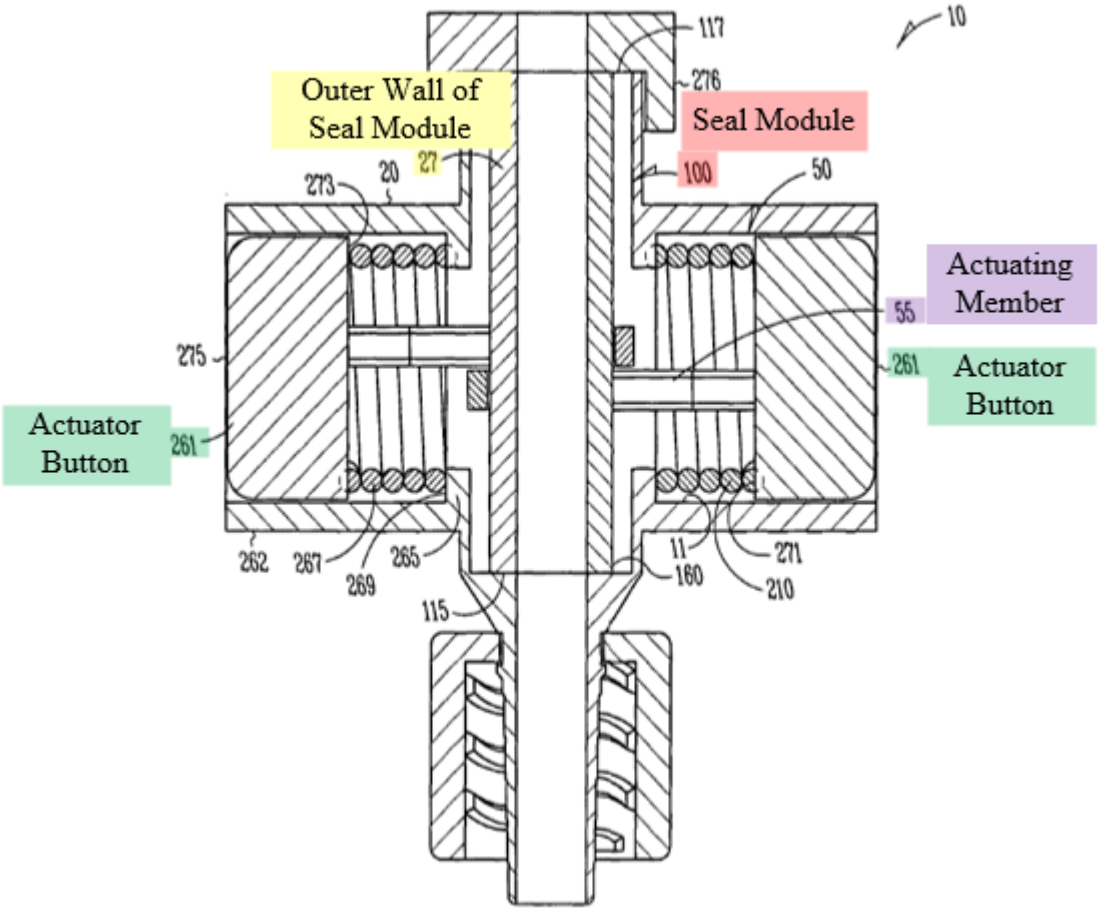

Fig. 34

EX1005, ¶ [0077] (emphasis added). Petitioner explains that in their proffered combination Hartley's string or Eller's wire member would wrap around Schaffer's seal module. Petition, pp. 35-39, 43-44. As explained by Petitioner with regard to Hartley, the seal module 100 would expand against Hartley's string to open when tension is released on the string: "pressing Schaffer's buttons inwardly (i.e., second position) would release the tension on the string, causing the string to loosen around the central lumen and allowing the lumen to open." *Id*. at p. 39. Petitioner provides a similar explanation for Eller:

"[w]hen Schaffer's actuator buttons are pressed inwardly, the tension on the wire member would be relaxed, causing the wire member to loosen" permitting Schaffer's seal module "to return to its open configuration." *Id.* at pp. 45-46. Thus, Hartley's string or Eller's wire member would never disengage—let alone forcibly disengage—Schaffer's seal module 100. That is, Hartley's string or Eller's wire member would remain in contact with and never disengage the seal module 100.

169. Accordingly, a POSITA would understand that substituting Hartley's string or Eller's wire member for Schaffer's U-shaped actuating members 55 would cause the actuating member (i.e., Hartley's string or Eller's wire member) not to disengage or forcibly disengage Schaffer's seal module, changing the principle of operation of Schaffer's device. Further, a POSITA would recognize that the ability for Schaffer's U-shaped actuating members to forcibly (i.e., actively) disengage from the seal module is a key aspect of Schaffer's design because it is part of Schaffer's solution for "balanc[ing] between closing force, opening force, friction, compression and durability." EX1005, ¶[0007]. Specifically, Schaffer's design with forcible disengagement promotes strong closing forces while maintaining the ability to easily open the valve and insert "flexible instrumentation" through the valve. *Id.*

F. Even Assuming Petitioner's Stated Motivations to Form a Better Seal and Avoid the Formation of Gaps, Petitioner Does Not Explain

Why a POSITA Would Have been Motivated to Substitute Hartley's String or Eller's Wire Member for Schaffer's U-Shaped Members as Opposed to Any of the Alternatives It Provides

170. Even assuming that a POSITA would understand Schaffer's valve to form gaps (they would not), a POSITA would not have been motivated to substitute Hartley's string or Eller's wire member for Schaffer's U-shaped actuating members to have both its ends attached to different actuator buttons (which neither Schaffer, Hartley, nor Eller disclose as I explain in §VIII.C. above) as suggested by Petitioner. Rather, a POSITA would make the relatively simple modifications to Schaffer's valve that Petitioner suggests. For example, when describing how Schaffer allegedly discloses the features of dependent Claim 5, Petitioner recites that a POSITA would have been motivated to adjust Schaffer's valve in several simple manners to improve/maintain its seal with a reasonable expectation of success. For example, Petitioner states:

> [I]f Schaffer's valve did not remain sealed when a pressure differential exists, POSITAs would have been motivated to make adjustments to the valve to maintain the seal, **including adjusting Schaffer's spring strength to apply additional force, adjusting the resilience and compressibility of the seal module that forms the valve's lumen** and/or adjusting the shape, flexibility, and/or dimensions of the actuating members to more closely conform to the shape of the seal module and any tool(s) inserted therethrough . . . POSITAs would have been motivated to adjust Schaffer's hemostasis valve to prevent blood leaks because that is the valve's purpose. (Ex. 1003, ¶¶128-129.)

Petition, p. 55 (emphasis added).

171. I agree that a POSITA would understand that some simple adjustments to Schaffer that would not change its principles of operation and could rectify any alleged deficiencies could be made, but that is another reason why a POSITA would not make the wholesale substitutions and modifications proposed by Petitioner that would contradict Schaffer's principle of operation. For example, the spring strength could be adjusted while maintaining the same manufacturing method disclosed by Schaffer, forcible disengagement of the U-shaped members from the seal module, and durability of the valve. Likewise, even if the "sticky," "self-closing," and "gelatinous" properties of the seal member 165 described in paragraph [0059] of Schaffer were considered optional, a POSITA would understand exactly how to make the seal member 165 have those properties to address any sealing issues by, for example, forming the seal member 165 of "commonly available [materials such] as 'C-Flex' or 'Kraton' in the range of 5 to 15 (shore A)," thereby maintain Schaffer's principles of operation. EX1005, ¶ [0059]. Accordingly, even assuming that Schaffer's valve would not form a complete seal around an instrument—it would—Petitioner asserts that a POSITA would have understood that the seal could have been improved by simply adjusting Schaffer's spring strength or adjusting the properties of the seal module. A POSITA would understand those modifications to be simpler and more likely to work than completely

omitting Schaffer's U-shaped members and substituting in Hartley's string or Eller's wire member as proposed by Petitioner (including attaching the string or wire member to two separate actuators which neither Schaffer, Hartley, nor Eller disclose). Petitioner provides no explanation for why a POSITA would have substituted Hartley's string or Eller's wire member for Schaffer's U-shaped members rather than make any of the simple modifications they assert would work to complete the seal and prevent blood leaks through the valve.

172. And, a POSITA would not have modified Schaffer in view of Hartley or Eller instead of, if somehow needed (they are not), making the simple changes identified above. As I explain in §§VIII.D-E. above, substituting Hartley's string or Eller's wire member for Schaffer's U-shaped members would likely render Schaffer's valve inoperable for its intended purpose of durability, easy manufacturing, and forcible disengagement. The simple modifications that Petitioner asserts a POSITA would understand would work to complete Schaffer's seal would not require a complete redesign of Schaffer's valve in a manner that significantly reduces durability and ease of manufacturing and eliminates forcible disengagement of the actuating members from the seal module.

G. Altogether a POSITA Would Not Have Been Motivated to Substitute Hartley's String or Eller's Wire Member for Schaffer's U-Shaped Members

173. Referring to my explanations in §§VIII.A-F. above, in sum a POSITA would not have been motivated to substitute Hartley's string or Eller's wire member for Schaffer's U-shaped actuating members. For example, under a proper reading of Schaffer, Hartley, and Eller:

(1) Schaffer's seal module 100 "blocks the flow of gas or fluid completely" with or without instruments placed therein (§§VIII.A-B.);

(2) Schaffer discloses a highly-compliant seal member 165 in every embodiment that forms a complete seal around a variety of profile shapes and diameters of the lumen, around small instruments, around large instruments, in the absence of instruments, and even around irregularly shaped instruments (§VIII.A.);

(3) Petitioner and its expert assert that a POSITA could simply adjust Schaffer's spring strength and/or adjust the properties of the seal module to address any sealing issues, if any, in Schaffer (§VIII.F.);

(4) Petitioner's proposed substitution are not a simple substitution of a known element because neither Schaffer, Hartley, nor Eller disclose a "filament" connected at opposite ends to and controlled by two actuators as proposed in Petitioner's combination (§§VIII.C.);

(5) Substituting Hartley's string or Eller's wire member for Schaffer's U-shaped actuating members would fundamentally change Schaffer's principles of operation (§VIII.D-E.); and

(6) Hartley's string and Eller's wire member would not provide a better seal than Schaffer's rigid U-shaped actuating members and seal module (§§VIII.A-B.).

174. A POSITA would thus not have modified or substituted Hartley's string or Eller's wire member and further modified the structure to connect the string or wire member to two separate actuators, as Petitioner contends. Petitioner's combination is a valve that operates in complete contrast to Schaffer's stated purposes—one in which (1) the actuating members (i.e., Hartley's string or Eller's wire member) are controlled by multiple rather than one of the actuator buttons 261, (2) the seal module 100 does not form a complete seal despite evry embodiment of Schaffer disclosing a seal member 165 that is highly-

compliant to form a seal around different tools, and (3) the string or wire member does not forcibly disengage the seal module 100. The proposed combination is such a stark departure from the principles of operation of Schaffer's valve that a POSITA would not have been motivated to arrive at Petitioner's purported combination.

H. The Combination of Schaffer and Hartley or Eller Does not Render Obvious Dependent Claim 10

175. Dependent Claim 10 further requires:

> [W]herein the actuator is a first actuator, wherein the filament is a first filament, wherein the biasing member is a first biasing member, and wherein the active tensioning mechanism further comprises:
>
> a second actuator coupled to the elongate member via a second filament extending at least partially around the elongate member, wherein the second actuator is moveable between (a) a first position wherein the lumen is constricted and sealed and (b) a second position wherein the lumen is at least partially open; and
>
> a second biasing member configured to bias the second actuator to the first position.

Accordingly, Claim 10 requires a second filament and a second actuator like the first filament and the first actuator of Claim 1. But, in Petitioner's

proposed combinations of Schaffer and Hartley or Eller, Hartley's single string or Eller's single wire member extends between Schaffer's two actuator buttons 261. Petition, pp. 35-38 & 43-44. That is, in those combinations Schaffer's valve includes only one single string or wire member and not a "first filament" and a "second filament" as required by Claim 10.

176. Recognizing that deficiency, Petitioner first asserts that in its combination of Schaffer and Hartley, Hartley's string 14 is a "first filament" and a "second filament" because "POSITAs would have recognized that Hartley's string 14 encompasses strings having two or more threads, lines, or cords twisted together and therefore includes at least a first and second filament." *Id*. at p. 66. Petitioner likewise asserts for the combination of Schaffer and Eller that "POSITAs would have found it obvious to use a wire member made from multiple filaments twisted together (i.e., strands or fibers)" such that the single wire member comprises the "first filament" and the "second filament." *Id*. at p. 70.

177. But even assuming that a POSITA would have been motivated to substitute Hartley's string or Eller's wire member into Schaffer's valve in the manner proposed by Petitioner (which I disagree with for all the reasons set forth above), Hartley's string or Eller's wire member does not comprise a "first filament" and a "second filament" as required by dependent Claim 10. First,

as I explain in §V.A. above, the '921 Patent discloses in Figure 6 an embodiment including a ***single*** filament 150 and in Figure 7 an embodiment including ***two*** filaments: a first filament 150-A and a second filament 150-B:

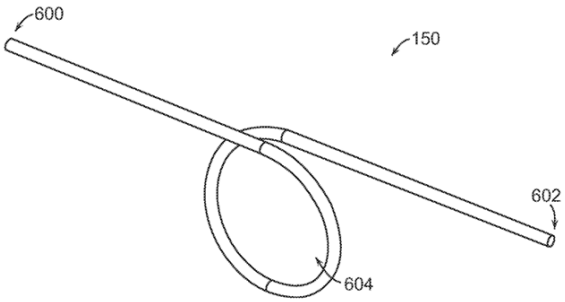

FIG. 6

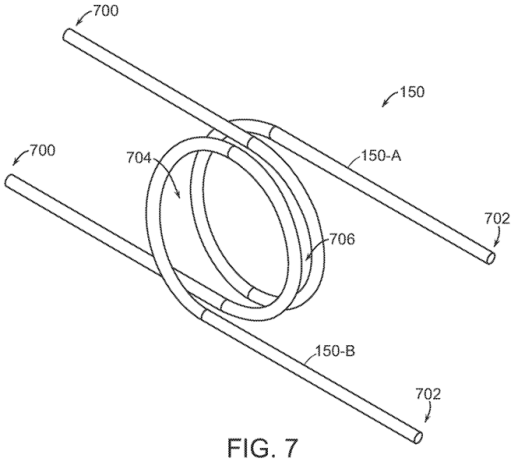

FIG. 7

EX1001, 13:10-17. Likewise, for the bight embodiments in Figures 8 and 9, the '921 Patent explains that the "filament 150 can be configured to form … a single bight or multiple bights," such as the illustrated first bight 800-A and second bight 800-B. *Id* at. 13:23-29. A POSITA would understand based on that disclosure that the "first filament" and the "second filament" require separate first and second filaments as shown in Figures 7-9 rather than a single filament composed of different threads like Figure 6 as Petitioner alleges.

178. Second, the '921 Patent distinguishes different embodiments in which each filament "can comprise a single strand such as, for example, a monofilament" or "a plurality of strands that can be, for example, twisted, woven, grouped, and/or fused to form the filament." *Id*. at 9:10-15. That is, the '921 Patent is

explicit that a single filament can be a monofilament or it can include a "plurality of strands," but a single filament does not become both a first and second filament simply because of multiple strands twisted together. A POSITA would further understand based on that disclosure that the "first filament" and the "second filament" require separate first and second filaments (whether formed of multiple strands or a single monofilament) rather than a single filament composed of different threads as Petitioner alleges.

179. For those reasons Hartley's string or Eller's wire member does not comprise a "first filament" and a "second filament" as required by dependent Claim 10.

180. Petitioner then provides another alternative theory of obviousness for Claim 10 alleging that a "rather than replace Schaffer's U-shaped actuating members with a single string extending from the first actuator to the second actuator, POSITAs would have also found it obvious to replace each U-shaped actuating member with a string" or "would have found it obvious to replace each of Schaffer's U-shaped actuating members with a wire member." Petition, pp. 68 & 70. I disagree.

181. First, just like a POSITA would not have "selected a thin, flexible sheet or flat ribbon of aluminum or plastic to form the actuating members" for the reasons I explain above in §VII for ground 2, a POSITA would not have substituted strings or wire members for the U-shaped actuating members. *Id*. at p. 33.

Namely, there is no motivation to modify Schaffer to make the U-shaped members flexible (e.g., like Hartley's string or Eller's wire member), and such a modification would change Schaffer's principles of operation and render Schaffer inoperable for its intended purposes of easy manufacturability, durability, and assembly.

182. Second, a POSITA would understand that in Petitioner's proposed combinations, the flexible strings or wire members would be able to move laterally along Schaffer's seal modules when Schaffer's actuator buttons 261 are depressed. Accordingly, unlike Schaffer's rigid actuating members 55, the two strings/wire members would not maintain a U-shape or their positions relative to one another when the actuator buttons 261 are depressed. Thus, contrary to Petitioner, the proposed substitutions would not "yield the predictable result of sealing Schaffer's valve" as the strings/wire members may move in such a way that they do not repeatedly seal. Petition, pp. 69-70. For example, the two strings or wire members might interfere with one another, especially after Schaffer's actuator buttons are depressed one or more times and if the valve were tilted relative to gravity such that one string/wire members moves toward the other along the seal module. Specifically, when Schaffer's actuator buttons are depressed one of Hartley's strings or Eller's wire members might move underneath the other, potentially reducing the sealing effectiveness of

the valve. Indeed, Petitioner's proposed arrangement would increase the cost and complexity of the proposed valve without any of Petitioner's proposed advantages.

183. Third, the mechanism of action in Petitioner's proposed substitutions is directly contrary to that of both Hartley and Eller such that the substitutions are not a mere simple substitution. Petition, pp. 68-70. As I explain above in §§V.C.2. & VIII.C., in Hartley the single string 14 has both ends attached to the same rotary actuator 12 such that the two ends of the string are moved away from one another to constrict when the actuator is actuated. EX1006, ¶ [0031]. Likewise, as I explain above in §§V.C.3. & VIII.C., in Eller each of the wire members has one end attached to itself or to the housing and the other end attached to the actuator such that one end of the string is moved away from the other when the actuator is actuated. *See*, e.g., EX1007, 15:21-40 & 17:38-18:8. In contrast, in petitioner's proposed combinations, the ends of each of Hartley's strings or Eller's wire members are attached to the same linear actuator such that ends cannot be moved away from one another in the manner taught by Hartley and Eller.

IX. GROUND 5: THE COMBINATION OF HARTLEY AND ELLER DOES NOT RENDER CLAIMS 1-3, 5-6, 9-10, 15-18, and 21-24

OBVIOUS

184. Petitioner and its expert, Mr. Thornton, allege that Hartley in combination with Eller renders obvious claims 1-3, 5-6, 9-10, 15-18, and 21-24 of the '921 Patent. I disagree for the reasons I discuss in further detail in this section. A POSITA would understand that it would not have been obvious to modify Hartley in view of Eller to arrive at the features of independent Claims 1, 15, and 21. Therefore, the combination of Schaffer and Eller does not render obvious those claims. And, because Claims 2-3, 5-6, 9-10, 16-18, and 22-24 depend from one of independent Claims 1, 15, or 21 and thus include all the limitations from those base claims, those claims are also not rendered obvious by the combination of Schaffer and Hartley or Eller.

185. As I explained above, for a patent claim to be rendered obvious, the differences between the claimed invention and the prior art must be such that the claimed invention as a whole would have been obvious before the effective filing date of the claimed invention to a person having ordinary skill in the art to which the claimed invention pertains, the claimed invention is obvious. Even if all limitations of a claimed invention are disclosed by the prior art combination, Petitioner must demonstrate an apparent reason to combine the known elements in the fashion of the patent claim at issue and that a person of ordinary skill in the art would have reasonable expectation of success in

pursuing that combination. A prior art reference teaches away from a modification of a prior art reference when a person of ordinary skill in the art would be discouraged from following the path set out in the reference, or would be led in a direction divergent from the path followed by and claimed in the patent.

A. Modifying Hartley to Include Eller's Torsion Spring Would Render Hartley's Valve Inoperable for Its Intended Purpose

186. Independent Claims 1, 15, and 21 each require a "biasing member configured to bias the actuator to the first position" wherein the "lumen is constricted and sealed." Petitioner concedes that Hartley does not teach a "biasing member" and asserts that it would have been obvious to a POSITA to have included Eller's torsion spring in Hartley's device to bias Hartley's device to a sealed position. Petition, pp. 81-85. I disagree because doing so would destroy the functionality and advantages of Hartley's ball and detent arrangement.

187. Hartley's valve includes a "detent arrangement having a ball 28 loaded by a spring 29 in an aperture 30 in the rotary actuator runs in a groove 32 in the cylindrical housing 6 … [t]he groove 32 has a central recess 34 and end recesses 36":

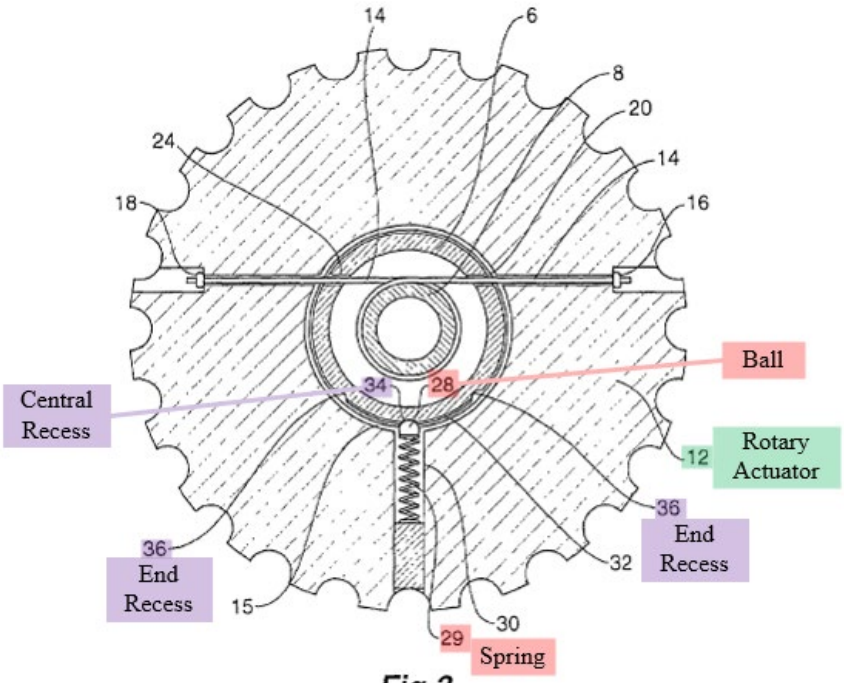

Fig 3

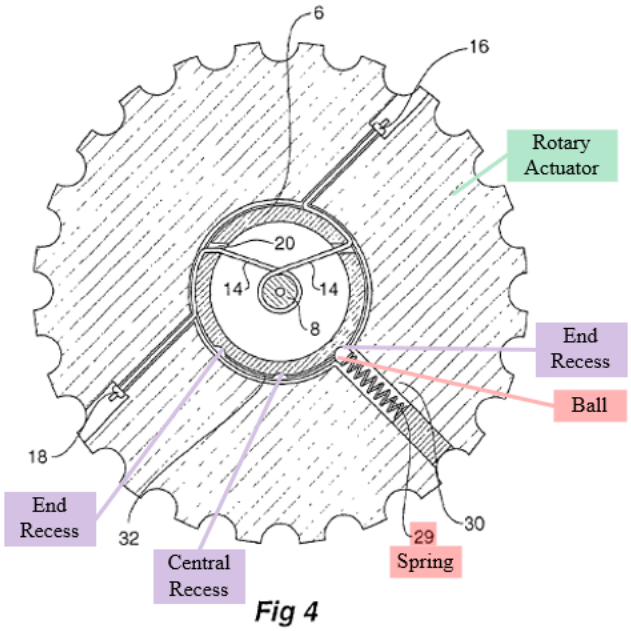

Fig 4

EX1006, ¶ [0033]. The ball and detent arrangement "provide[s] tactile feel [of] the action of the valve" and "assist[s] with retaining the rotary actuator on the cylindrical housing." *Id*. at ¶¶ [0018] & [0033]. "There may also be

further recesses or detents between the central recess and the end recesses. *Id*. at [0033]. In the open position shown in Figure 3 of Hartley, the ball 28 is in the central recess 34 of the groove 32 and, in the sealed position shown in Figure 4 of Hartley, the ball 28 is in one of the end recesses 36 of the groove 32. The "rotary actuator may be rotated in either direction [to either of the end recesses 36] to cause constriction of the constriction valve, and the detents provide tactile feel the action of the valve." *Id*. at ¶ [0033]. "Rotation of the rotary actuator back to the central position where the detent ball 28 is received in depression 34 will cause the sutures to loosen again so that the resilient cylindrical diaphragm will retain its original shape as shown in FIGS. 1 and 3." *Id*. at ¶ [0034].

188. Accordingly, a POSITA would understand that Hartley's ball and detent arrangement provides a tactile feel of the valve state (open, closed) during use and also acts to selectively lock the position of the rotary actuator relative to the cylindrical housing 6 to maintain the valve state—i.e., the amount of constriction of the cylindrical diaphragm 8. That is, Hartley's ball and detent arrangement allows its valve to be retained at different open and/or closed states with the detent ball 28 in one of the different recesses—the central recess 34, the first one of the end recesses 36, the second one of the end recesses 36, or "further recesses" contemplated by Hartley.

189. Including Eller's torsion spring in Hartley's valve as proposed by Petitioner would cause Hartley's valve to automatically move to the sealed position shown in Figure 4 absent user actuation of the rotary actuator. Accordingly, Hartley's valve would be unable to be retained in the open position shown in Figure 3 in which "the detent ball 28 is received in depression 34" (or a partially open position with the detent ball 28 positioned in one of the end recesses 36) without the user maintaining their fingers on Hartley's rotary actuator to provide a force that counteracts the force of Eller's torsion spring. *Id*. at ¶ [0034]. That is, in Petitioner's combination, Hartley's ball and detent arrangement would be unable to "assist with retaining the rotary actuator on the cylindrical housing" because the spring force of Eller's torsion spring would simply override the retaining force provided by the spring 29 of the ball and detent arrangement. *Id*. at [0018]. Therefore, a POSITA would not have been motivated to incorporate Eller's torsion spring into Hartley's valve because it would render Hartley's ball and detent arrangement completely inoperable for its intended purpose of retaining the rotary actuator in position and thereby maintaining the valve in a selected valve state (open, closed, partially open). Moreover, as I explain in §IX.B. below, Hartley's functionality of maintaining the valve in an open state provides several advantages over Eller's system in which the valve is biased closed by a torsion spring.

190. Petitioner's expert argues that "Hartley makes clear that the ball and detent are optional features." EX1003, ¶ 193. I disagree—based on Hartley's entire disclosure, Hartley's ball and detent option appears to be a required feature of Hartley's valve. For example, while the summary of the invention states that the "rotary actuator **may** have a tactile indication of its action by means of a ball or other device acting into detents between the actuator and the cylindrical housing," I note that the only illustrated embodiments of Hartley's valve include the ball and detent arrangement shown in Figures 3 and 4. EX1006, ¶ [0018] (emphasis added). Likewise, the description of Figures 3 and 4 does not state that the detent arrangement is optional: "[a]s particularly shown in FIGS. 3 and 4 a detent arrangement having a ball 28 loaded by a spring 29 in an aperture 30 in the rotary actuator runs in a groove 32 in the cylindrical housing 6." *Id*. at ¶ [0033]. In contrast, that same description in Hartley clearly states when a feature is optional: "[t]here may also be further recesses or detents between the central recess and the end recesses." *Id*.

191. Petitioner and its expert also argue that "Hartley's detent mechanism (*see e.g.*, Fig. 3-4) would offer benefits even with a torsion spring because it would provide 'tactical feedback' as the user opens the valve." Petition, p. 85; EX1003, ¶ 193. But, even if so, that ignores that Petitioner's modification would render Hartley's ball and detent arrangement completely inoperable for

its intended purpose of retaining the rotary actuator in position and thereby maintaining the valve in a selected valve state (open, partially open) as I explain above.

B. Petitioner's Stated Motivations to Modify Hartley to Include Eller's Torsion Spring Would Not Have Been Compelling to a POSITA Considering the Countervailing Advantages of Hartley's Device

192. Petitioner provides several reasons why a POSITA would have allegedly been motivated to include Eller's biasing system (torsion spring) in Hartley's valve: (1) "the biasing member ensures that Hartley's valve seals quickly when a device is removed through the valve, which minimizes blood loss," (2) "the biasing system ensures that the physician cannot inadvertently leave the valve open after removing a device, which could lead to unwanted blood loss," and (3) "the biasing member simplifies Hartley's valve by reducing the steps required to seal the valve" by, for example, "eliminat[ing] the need for the operator to manually seal the valve prior to or during the procedure." Petition, pp. 83-84.

193. However, Petitioner fails to consider the advantages of Hartley's valve that would be destroyed by Petitioner's proposed combination. For example, as I describe in §IX.A. above, incorporating Eller's torsion spring into Hartley's valve would render Hartley's ball and detent arrangement inoperable for its intended purpose of retaining the rotary actuator in position and thereby

maintaining the valve in a selected valve state (open, closed). A POSITA would understand that this functionality of the ball and detent arrangement to maintain the valve in an open state (without a user holding the valve open by rotating the rotary actuator 14) would be advantageous during insertion of instruments through Hartley's valve.

194. Specifically, a POSITA would understand that in Petitioner's proposed combination, Eller's torsion spring would exert a significant compression force against an instrument inserted through Hartley's valve—especially for large instruments that greatly compress the torsion spring—as the torsion spring would always act to provide a biasing force to completely constrict and seal Hartley's cylindrical diaphragm 8. This force of the torsion spring would significantly inhibit movement (advancement, retraction) of the instrument through Hartley's valve. In contrast, Hartley's ball and detent arrangement allows Hartley's valve to be selectively maintained in an open or partially open state in which there is no or minimal compressive force on the cylindrical diaphragm 8 such that instruments could be easily manipulated through Hartley's valve.

195. A POSITA would understand that this ability to have a loosened valve that exerts little or no compression force against an inserted instrument is desirable in some situations. As one example, Schaffer recognizes that "[i]f a valve is

inordinately tight, having a closed lumen, it may not allow the insertion of soft, flexible instrumentation such as a 'floppy-tip' guidewire, a delicate laser fiber or a soft-tipped catheter" and that "[s]ome catheters, optical fibers and fluid transmission tubes are very delicate and can be damaged by excessive compression or insertion force." EX1005, ¶ [0007]. Therefore, a POSITA would recognize that Hartley's ball and detent arrangement allows Hartley's valve to be selectively maintained in a position that does not exert excessive compressive force against an inserted instrument that could damage the instrument and that would act to inhibit manipulation of the instrument.

196. Moreover, a POSITA would recognize that Hartley's valve is designed to and/or could be easily designed to provide the advantage of maintaining the valve in a position that exerts no or little compressive force against instrument while also minimizing blood loss during a medical procedure. For example, while Hartley illustrates three recesses (detents) 32 and 34, Hartley provides that "[t]here may also be further recesses or detents between the central recess and the end recesses." EX1006, [0033]. A POSITA would understand that with three or more than three detents, Hartley's valve could be selectively locked in a position in which a diameter of the valve lumen closely matches the diameter of an instrument inserted therethrough. In this arrangement, the valve would provide no or relatively little resistance to the manipulation of

instruments through the valve while also minimizing blood loss because the valve lumen generally matches the diameter of the instrument.

197. To relieve the compressive force against an instrument in Petitioner's proposed combination, a user would need to move Hartley's rotary actuator against the force of Eller's torsion spring and maintain the rotary actuator in this position to counteract the force of Eller's torsion spring. This would require the user to constantly engage (e.g., with one or both of the user's hands) the rotary actuator during manipulation of instruments through the valve. Accordingly, Petitioner's proposed combination would significantly complicate Hartley's valve and the steps required to insert instruments therethrough.

198. Accordingly, it would not have been obvious to a POSITA to have modified Hartley to include Eller's torsion spring. As set forth above, doing so would destroy the functionality of Hartley's ball and detent system, provide a constant compressive force against an instrument inserted through Hartley's valve that would act to greatly hinder manipulation of the instrument through the valve and potentially damage the instrument, and significantly complicate Hartley's valve and the steps required to insert instruments therethrough. Put differently, the advantages set forth by Petitioner of its proposed combination of Hartley and Eller would not have motivated a POSITA to have made the combination in view of the countervailing disadvantages that the combination

would introduce and that are counter to the express structure and operation of Hartley's valve.

X. SECONDARY CONSIDERATIONS

199. I have not rendered any opinions on secondary considerations of non-obviousness at this time, but reserve the right to analyze evidence of secondary considerations at a later stage, if asked to do so.

XI. CONCLUSION

200. For all the above reasons, it is my opinion that the Claims of the '921 Patent are not invalid based on the prior art grounds asserted by Petitioner and Mr. Thornton.

I, Paul J. Zalesky, declare that all statements made herein of my knowledge are true, and that all statements made on information and belief are believed to be true, and that these statements were made with the knowledge that willful false statements and the like so made are punishable by fine or imprisonment, or both, under Section 1001 of Title 18 of the United States Code.

Respectfully submitted,

Dated: JAN 15, 2026 By: Paul J. Zalesky

Paul J. Zalesky

Paul J Zalesky, PhD
124 Gilbert Stuart Dr
East Greenwich, RI 02818
mobile: 714-585-2423
e-mail : pauljzalesky@gmail.com

Summary of Experience: All aspects of medical specialty Product Development and commercialization, emphasizing technological bases and IP management

June 2012 to Present: *Consultant to multiple medical technology companies and legal practices*; Contract CEO for Envisage Medical to develop the Product Development program and raise capital with Research Triangle Institute for a real-time image guidance of structural and rhythm heart procedures; acting VP Bus Dev for Israeli percutaneous mitral valve, management of development with clinical/regulatory strategy; Board member and Key Consultant for China-based BioVention, a drug-eluting stent company; acting CEO for Device Sanitation start-up emphasizing design, development, and commercialization; *Expert Consultant or Witness* to attorney clients and private companies, emphasizing underlying medical technology (cardiovascular emphasis), clinical/regulatory strategies & plans, associated patent validity or infringement, patient injury and associated company liability; medical device product development and commercialization – all aspects.

Mar 2011 to June 2012: Interim *CEO, Keystone Heart, Inc.*: Product Design & Development, pre-clinical, and clinical study, regulatory submission planning and execution for cerebral protection during heart valve repair, in collaboration with international CV Surgeons and Cardiologists. Direct management of Clinical Research Org and Regulatory personnel towards CE Mark and FDA submissions as part of managing all operations.

Feb 2009 to Mar 2011: *Consultant, SVMI, Inc., Accumed, Inc, other start-ups and Investment Institutions:* Product Development plans, Business Development, Financing, FDA and other regulatory body strategy planning, and Intellectual Property Planning and protection. Perform technical due diligence on novel medical technologies towards financial institution investing.

June 2007 to Feb 2009: *Vice President, R&D, Volcano Corporation (now Philips)* Manage all aspects of Product Development, New Technology, and Intellectual Property for this public company with revenues exceeding $ 200 MM in Interventional Cardiology; produce numerous pre-market document packages for FDA review and dialog

Sept 2004 to Present: Consultant, Board Member, Consulting Expert:
Round Table Group Scholar program; *Consulting Expert Witness; Medical Specialty Consultant*: advise legal counsel, representing BSC, on multiple patent-related and technical and practical aspects.

The Battelle Institute: advise on key organization changes and recommended practices.

IVIT, Inc.: acting CEO for a Vascular Access company developing technology for chronic hemodialysis patients, emphasizing design for least invasive vascular procedures and fast regulatory approval path

CryoCath, Inc.: mentor VP R&D and technical staff for an electrophysiology / cardiology company seeking fast time-to-market for devices for least invasive treatment of cardiac arrhythmias, with emphasis on atrial fibrillation (subsequently acquired by Medtronic).

Biovention, Inc.: direct, via Board position, strategy, product development and clinical/regulatory path for this novel, heparin-additive, drug-eluting coronary stent company; negotiate M&A with multi-national companies.

Multiple Companies, Investors and Legal Counsel: analyze and advise, in consulting capacity, on multiple Product Development programs for wireless cardiovascular implants, in vitro diagnostics, aorta implants for aneurysm treatment, non-vascular applications of intravascular imaging, and gastroenterological least invasive therapies; enable specialized contract developers / manufacturers to drive selected aspects of product development for expediency; collaborate with key consultants and employees on clinical & regulatory strategies and plans; provide expert consulting for broad-based health care institutions and retained legal counsel. Provide to legal counsel expert opinions / reports on medical device patent cases involving validity and/or infringement; appear for court testimony and depositions associated with numerous patent cases.

Sept 2003 to April 2005: *President & CEO, LumeRx, Inc*.: managed all aspects of this development stage company focused on light-based therapy in Gastroenterology, with emphasis on design and development of therapeutic product; raised $ 7 MM private equity financing; recruited and managed key technical staff , consultants and contract organizations for Clinical/Regulatory/Quality and Marketing.

August 2003 to December 2006: *Consultant CTO, TherOx, Inc.:* consulting continuity with emphasis on new product development, business development, new financing support, and clinical/regulatory strategies for this multiple opportunity company; continued Board of Directors activities; manage focused development programs for interventional cardiology, cardiovascular surgery, cancer therapy, wound and skin care, and GI therapies.

May 2001 to August 2003: *Chief Technical Officer, TherOx, Inc.:* identified and managed multiple cardiovascular business opportunities, as well as core product development and manufacturing, with associated novel designs and development paths, emphasizing CV Surgery and intra-PTCA alternatives for hyperbaric Oxygenation solution technology, specialty wound care therapy, and selected oncology therapies using vascular administration; managed all aspects of Intellectual Property.

June 1994 to May 2001: *President and Co-founder, TherOx, Inc.:* managed all Product Development and operating aspects of this start-up, integrating a hardware/software bedside system with disposable catheters, focusing on 1)Acute MI, 2) skin & wound care, 3) cancer therapy; raised more than $ 52 MM in private capital with KPCB as lead investor; recruited initial 45 employees in all operating functions, achieved multiple FDA and CE Mark approvals, established clean room manufacturing of disposables and electromechanical control + delivery systems, directed extensive, multi-phase clinical studies in US and Europe, established and maintained opinion-leading SAB, and recruited key international technology consultants for breakthrough developments; directed development and management of all intellectual property (primarily patents).

May 1991 to June 1994: *VP R&D, Baxter Bentley*: managed all product development, advanced manufacturing, clinical, and related technical support aspects for this cardiopulmonary bypass company with $ 150 MM annual revenue; served as group R&D and strategic planning representative for all Cardiovascular Group divisions with $ 900 MM annual revenue base to enable key growth and diversification strategies, with emphasis on interventional cardiology; coordinated use of selected Baxter corporate capabilities to achieve operating efficiencies; interacted with FDA on critical programs.

May 1986 to March 1990: *President & Co-founder, InterTherapy, Inc.:* managed all aspects of this start-up focused on the design and development of intracoronary ultrasound for interventional cardiology; raised more than $ 11 MM venture capital; organized SAB and Clinical Investigator array with opinion-leading Interventional Cardiologists in the US and Europe; accomplished rapid FDA approval for marketing, ISO certification, and aggressive early marketing with pilot in-house manufacturing capability; managed Intellectual Property development.
(was merged with CVIS, then acquired by BSC).

Previous experience included Executive R&D management positions with Johnson & Johnson, Edwards Labs, and Meadox Medicals, and a Special Expert position for the National Institutes of Health. Additionally, served 3 years of active duty as a Captain in the USAF, performing cardiopulmonary research with human subjects for development of life support systems for high performance aircraft.

Education

PhD, Univ. of Michigan, Biomedical Engineering - NIH pre-doctoral fellow
M.S., Univ. of Michigan, Aerospace Engineering – NSF fellow
B.S., Univ. of Notre Dame, Aerospace Engineering – USAF Scholarship

Publications and Patents

Lead or co-author of approximately 20 articles in medical and research journals, encompassing cardiovascular technology and devices, bench and animal model tests on new technologies for heart-related diagnosis and therapy, and clinical (patient) studies on new devices and procedures.

Representative Publications:

"Intravascular Ultrasonic imaging", Texas Heart Institute Journal, 1990

"Intravascular Ultrasound imaging of Human Coronary Arteries In Vivo: Analysis of Tissue Characterization with Comparison to In Vitro Histological Specimens", Circulation, 1991

"A New Bioabsorbable Intravascular Stent: In Vitro Assessment of Hemodynamic and Morphometric Characteristics:, J of Interv Cardiol, 1992

"Topical Oxygen Emulsion – A Novel Wound Therapy", Arch Dermatol, 2007

"The effect of a topical Oxygen emulsion on granulation tissue formation in second degree burn wound healing", Ostomy Wound Management, 2004

Co-inventor on more than 16 US and International patents, encompassing intravascular ultrasound, coronary and cerebrovascular catheters and guidewires, electromechanical imaging and control systems, next generation cardiopulmonary bypass systems, Oxygen supersaturated solutions' preparation and vascular delivery, and photodynamic therapy devices and systems.

Representative Patents:

US 4,841,977 - 1989 – "Ultra-thin acoustic transducer and balloon catheter using same in imaging array subassembly:

US 5,115,814 – 1992 – "Intravascular ultrasonic imaging probe and method of using same"

US 5,976,119 – 1999 – "High pressure perfusion device"

US 6,123,698 – 2000 – "Angioscopy apparatus and methods"

US 6,235,007 – 2001 – "Atraumatic fluid delivery device"

US 6,248,087 – 2001 – "Apparatus for generalized extracorporeal support"

US 6,454,997 – 2002 – "Apparatus for the preparation and delivery of gas-enriched fluids"

US 6,558,501 B2 – 2003 – "Method for forming atraumatic fluid delivery device"

US 6,596,235 B2 – 2003 – "Method for blood oxygenator"

US 6,613,280 – 2005 – "Disposable cartridge for producing gas-enriched fluids"

US 6,974,435 – 2005 – “Method for enriching a bodily fluid with gas”

US 6,676,800 B1 – 2004 – “Method of for preparation and delivery of gas-enriched fluids”

US 6,607,698 B1 – 2003 – “Method for generalized extracorporeal support”

US 7,468,191 B2 – 2008 – “Method of preparing gas delivering perfluorocarbon emulsions with non-fluorinated surfactants”

US 7,357,937 B2 – 2008 – “Perfluorocarbon emulsion with non-fluorinated surfactants”

US 7,820,102 – 2010 – “Disposable cartridge for producing gas-enriched fluids”

US 4,899,756 – 1990 – “Ultrasonic imaging probe with zero dead space”

US 7,135,034 – 2006 – “Flexible array”

US 7,261,730 – 2007 – “Phototherapy device and system”

US 7,449,026 – 2008 – Intra-cavity catheters and methods of use”

Personal

Married with four children

Other

During the past 10 years (2015 – 2025), testified in depositions and court settings regarding specialized medical technologies and various aspects of their commercialization. Examples:

- Multiple appearances in front of arbitration judges regarding a tissue harvesting product, its development and commercialization
- Deposition regarding an algorithm for detecting heart rhythm disturbances
- Deposition regarding a cardiac pacemaker and reported patient injuries and deaths
- Court testimony to FTC officials regarding product attributes and performance claims

In addition, I have produced and delivered several formal reports to legal counsel and affected 3rd parties (insurance arbiters, for example) regarding serious patient injury resulting from the professional use of medical devices.

MATERIALS CONSIDERED

EXHIBIT/PAPER NO.	DESCRIPTION
EX1001	U.S. Patent No. 11,844,921 ("the '921 patent")
EX1002	'921 Patent Prosecution History Excerpt
EX1003	Expert Declaration of Troy Thornton
EX1004	Resume of Troy Thornton
EX1005	U.S. Patent Publication US 2003/0225379 A1 to Schaffer et al. ("Schaffer")
EX1006	U.S. Patent Publication US 2003/0116731 A1 to Hartley ("Hartley")
EX1007	U.S. Patent No. 9,980,813 B1 to Eller ("Eller")
EX1008	Certified File History of U.S. Patent Application 10/371,190 (Schaffer File History)
EX1009	U.S. Patent No. 5,429,616 to Schaffer ("Schaffer '616")
EX1010	U.S. Patent No. 3,438,607 to Williams et al.
EX1011	U.S. Patent Publication US 2015/0173782 A1 to Garrison et al. ("Garrison")
EX1012	U.S. Patent No. 11,697,011 ("the '011 patent")
EX1013	Inari's Supplemental Infringement Contentions (without claim charts) from *Inari Medical, Inc. v. Imperative Care, Inc.,* No. 24-cv-3117 (N.D. Cal.) (served February 7, 2025).
EX1014	Google Dictionary Definition of "String"
EX1015	Cambridge Dictionary Definition of "String"
EX1016	U.S. Patent No. 12,109,384 B2 to Merritt et al.
EX1017	Decision Granting Institution of *Inter Partes* Review for U.S. Patent No. 11,697,011 (Paper 7) in *Imperative Care, Inc. v. Inari Medical, Inc.,* IPR2024-01157 (P.T.A.B. Jan. 23, 2025)
EX1018	PCT Patent Publication WO 2018/019829 A1 to Brady et al.

EXHIBIT/PAPER NO.	DESCRIPTION
EX1019	Inari's Notice of Motion and Motion for Leave to File Third Amended Complaint (Dkt. #88) in *Inari Medical, Inc. v. Imperative Care, Inc.,* 24-cv-03117-EKL (N.D. Cal.) (filed March 5, 2025)
EX1020	U.S. Patent No. 6,776,770 B2 to Treretola
EX1021	Case Management & Scheduling Order (Dkt. #54) in *Inari Medical, Inc. v. Imperative Care, Inc.,* 24-cv-03117-EKL (N.D. Cal.) (issued December 19, 2024)
Paper 1	Petition for *Inter Partes* Review
EX2018	U.S. Patent Publication US 2008/0087853 A1 to Kees ("Kees")
EX2019	U.S. Patent Publication US 2011/0144592 A1 to Wong et al. ("Wong")
EX2020	Notice of Allowance Issued in U.S. Patent Application No. 16/117,519 (January 27, 2021)
EX2025	Merriam-Webster's Collegiate Dictionary (11th ed. 2014)
EX2026	New Oxford American Dictionary (3rd ed. 2010)
EX2027	U.S. Patent Application Publication No. 2018/0193043
EX2028	Deposition Transcript of Troy Thornton (September 30, 2024)
EX2029	U.S. Patent No. 7,682,380 to Thornton ("Thornton")
EX2030	Deposition Transcript of Troy Thornton (March 19, 2025)
EX2031	Deposition Transcript of Troy Thornton (June 25, 2025)
EX2032	Decision Granting Institution of *Inter Partes* Review for U.S. Patent No. 11,697,012 (Paper 6) in *Imperative Care, Inc. v. Inari Medical, Inc.,* IPR2025-00156 (P.T.A.B. Apr. 22, 2025)
EX2034	Deposition Transcript of Troy L. Thornton (Nov. 20, 2025)
EX2035	Deposition Transcript of Troy L. Thornton (Jan. 7, 2026)