Trials@uspto.gov
Tel: 571-272-7822

Paper 14
Date: November 10, 2025

UNITED STATES PATENT AND TRADEMARK OFFICE

BEFORE THE PATENT TRIAL AND APPEAL BOARD

GOOGLE LLC,
Petitioner,

v.

SANDPIPER CDN, LLC,
Patent Owner.

IPR2025-00806
Patent 8,645,517 B2

Before MITCHELL G. WEATHERLY, SHEILA F. McSHANE, and MICHAEL T. CYGAN, *Administrative Patent Judges*.

Opinion for the Board filed by *Administrative Patent Judge* McSHANE.

Opinion Concurring by *Administrative Patent Judge* CYGAN.

McSHANE, *Administrative Patent Judge*.

DECISION
Granting Institution of *Inter Partes* Review
35 U.S.C. § 314

I. INTRODUCTION

Google LLC ("Petitioner") filed a Petition (Paper 1, "Pet.") requesting *inter partes* review of claims 1–20 (the "challenged claims") of U.S. Patent No. 8,645,517 B2 (Ex. 1001, "the '517 patent"), along with the Declaration of Bill Lin, Ph.D. (Ex. 1003). Sandpiper CDN, LLC ("Patent Owner") filed a Preliminary Response, along with the Declaration of Dr. Prashant Shenoy (Ex. 2015).[1] Paper 8 ("Prelim. Resp.").

The Board has authority to determine whether to institute an *inter partes* review. *See* 35 U.S.C. § 314; 37 C.F.R. § 42.4(a). Under 35 U.S.C. § 314(a), we may not authorize an *inter partes* review unless the information in the petition and the preliminary response "shows that there is a reasonable likelihood that the petitioner would prevail with respect to at least 1 of the claims challenged in the petition."

For the reasons stated below, we determine that Petitioner has established a reasonable likelihood that it would prevail with respect to at least one claim. We therefore institute *inter partes* review as to all of the challenged claims of the '517 patent and all of the asserted grounds of unpatentability in the Petition.

---

[1] The parties also filed briefs directed to discretionary denial issues. *See* Papers 6, 9, 12. The Acting Chief Administrative Patent Judge, as delegated by the Acting Director, denied Patent Owner's request for discretionary denial and referred the Petition to the Board. *See* Paper 13. We do not address discretionary denial issues here. *See* https://www.uspto.gov/patents/ptab/interim-director-discretionary-processes, Section I.C, Briefing ("The petitioner and patent owner should not present discretionary considerations in the petition or the Patent Owner Preliminary Response (POPR), respectively.").

II. BACKGROUND

A. Related Matters

The parties identify *Sandpiper CDN, LLC v. Google LLC*, No. 2:24-cv-03951 (C.D. Cal., May 10, 2024) as a related matter. Pet. 78; Paper 4, 1.

B. Real Parties in Interest

Petitioner identifies itself, Google LLC, as the sole real party in interest. Pet. 78. Petitioner states that Google LLC is a subsidiary of XXVI Holdings Inc., which is a subsidiary of Alphabet Inc. XXVI Holdings Inc. and Alphabet Inc. *Id*., at 78 n.1. Patent Owner identifies itself, Sandpiper CDN, LLC, as the sole real party in interest. Paper 4, 1.

C. The '517 Patent (Ex. 1001)

The '517 patent, titled "Policy-Based Content Delivery Network Selection," issued February 4, 2014. Ex. 1001, codes (45), (54).

The '517 patent relates to "a framework wherein resources of a content provider may be delivered to clients from different domains, a method distributes the requests based on content-provider policies." Ex. 1001, code (57). The adaptive global traffic control and management framework is depicted in Figure 1, reproduced below. *Id*. at 2:31–32.

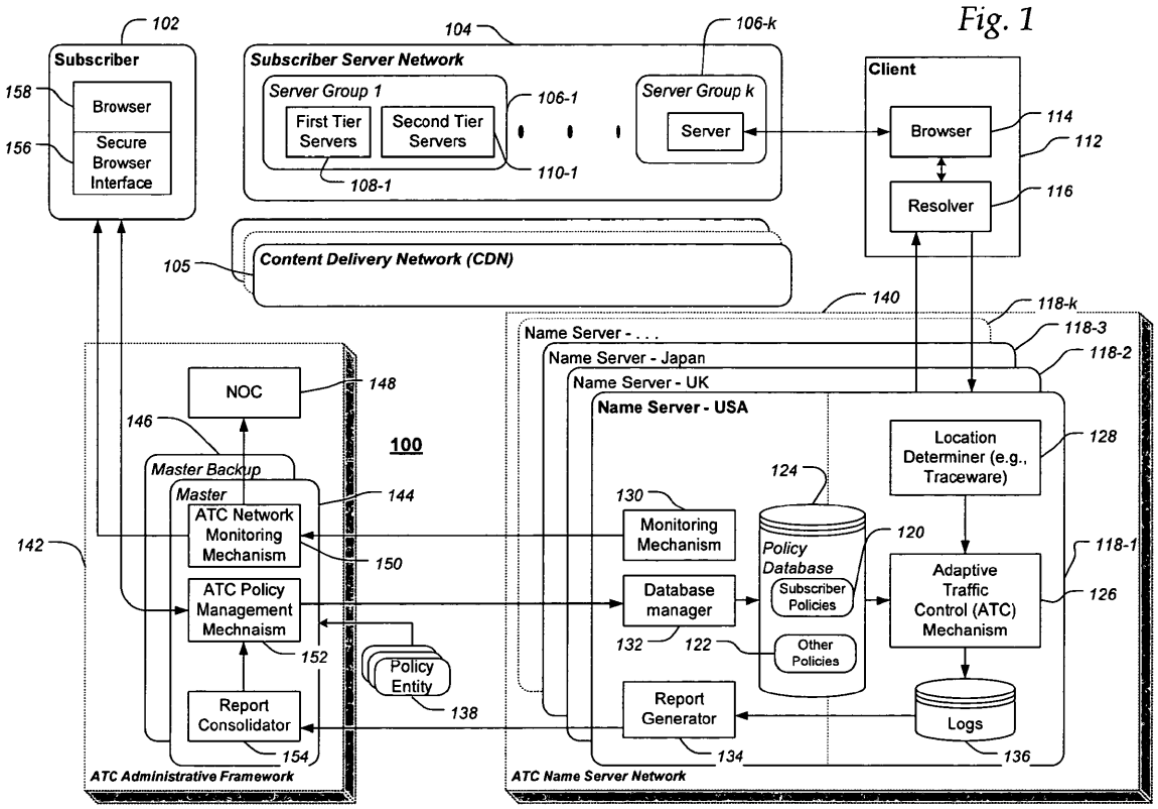

Figure 1, above, depicts the framework of the system, which includes Client 112, Subscriber Server Network 104, and ATC [Adaptive Traffic Control] Name Server Network 140. Ex. 1001, 2:31–32, 3:57–58, 6:45–57. In the system operation, a client may request access to content stored on the subscriber servers (*id*., 3:57–4:21), and a DNS [Domain Name Server] returns an address of a selected server (*id*., 4:35–51), so the client can access content by the use of a browser. Servers are selected based upon policies stored in policy database 124 (*id*., 4:44–49). A decision tree is generated as follows:

> [P]olicy may be created by generating a decision tree representing the ATC rules that the user (content provider/subscriber) wants to apply. At the leaves of this tree (referred to as resource nodes) a user specifies the answers (IP addresses or CNAMEs) that the user wants ATC to provide in response to a DNS request. At the branches of this tree (referred

> to as branch nodes) the user specifies the various decision criteria that the user wants to apply.

Ex. 1001, 9:1–8.

D. The Challenged Claims

Petitioner challenges claims 1–20 of the ’517 patent. Pet. 2. Claims 1, 9, and 17 are independent claims, claiming, respectively, a method, apparatus, and system. Claim 1 is illustrative of the claimed subject matter and is reproduced below, with bracketed designations added for reference purposes.

> [1.pre.i] 1. A method, operable in a framework in which an adaptive traffic control name server network implements policy-based traffic direction,
>
> [1.pre.ii] the name server network comprising at least one domain name server comprising hardware in combination with software and constructed and adapted to provide adaptive policy-based domain name service, the method comprising:
>
> > [1.a] (A) providing a graphical user interface (GUI);
> >
> > [1.b] (B) using said GUI to obtain at least one policy for direction of network traffic, wherein the GUI supports the setting of said at least one policy using a decision tree representing rules; and
> >
> > [1.c] (C) providing said at least one policy to the name server network,
> >
> > [1.d] wherein the decision tree comprises one or more resource nodes, and one or more branch nodes, wherein the one or more resource nodes specify one or more answers to be provided in response to a Domain Name Service (DNS) request, and wherein the one or more branch nodes specify one or more decision criteria to be applied, and
> >
> > [1.e.i] wherein the GUI supports the specification of:
> >
> > > (i) one or more answers for the one or more resource nodes, and

> [1.e.ii] (ii) one or more decision criteria for the one or more branch nodes, wherein the one or more criteria are selected from criteria related to: world zones, countries, states, time zones, and blocks of Internet Protocol (IP) addresses, and
>
> [1.f] wherein the one or more resource nodes are selected from: IP addresses, canonical name (CNAME) records, mail exchange (MX) records, name server (NS) records, and load sharing server sets; and
>
> [1.g] wherein the answers are selected from: IP addresses and CNAMEs.

Ex. 1001, 31:24–56.

E. Asserted Grounds of Unpatentability

Petitioner asserts the following challenges to patentability :

Claims Challenged	35 U.S.C. §[2]	Reference(s)/Basis
1, 4–6, 12–20	103(a)	Beaumont[3], Hasan[4]
2, 3, 10, 11	103(a)	Beaumont, Hasan, Biliris[5]
1–20	103(a)	Ben-Shaul[6]
1–20	103(a)	Ben-Shaul, Hasan

Pet. 2.

Petitioner contends that all the references asserted are prior art under 35 U.S.C. § 102(b) and § 102(e) under the proper priority date of October

[2] The Leahy-Smith America Invents Act ("AIA"), Pub. L. No. 112-29, 125 Stat. 284, 287–88 (2011), amended 35 U.S.C. §§ 102, 103, effective March 16, 2013. As discussed further below, there is a dispute related to the priority date of the '517 patent, but under any alleged priority date, the pre-AIA version of § 103 applies. *See* Pet. 6; Prelim. Resp. 12–14.

[3] US 2002/0169890 Al, published November 14, 2002 (Ex. 1007).

[4] US 7,082,464 B2, filed July 6, 2001 (Ex. 1006).

[5] US 2002/0078233 A1, published June 20, 2002 (Ex. 1008).

[6] US 2002/0010798 A1, published January 24, 2002 (Ex. 1005).

26, 2007, of the ’517 patent. *Id*. at 2. The priority date of the ’517 patent is discussed in more detail below.

III. ANALYSIS

A. Level of Ordinary Skill in the Art

Petitioner asserts that a person of ordinary skill in the art:

> would have had at least a bachelor’s degree in computer science, electrical engineering, or a related field, and at least two years of work or research experience in the field of content delivery management or networks. Work experience can substitute for formal education and additional formal education can substitute for work experience.

Pet. 8 (citing Ex. 1003 ¶¶ 50–52). Patent Owner “submits that the Board does not need to resolve the appropriate level of skill for a POSA [person of ordinary skill in the art] for purposes of deciding institution because the Petition fails under any articulation of a POSA.” Prelim Resp. 2.

For the purposes of this Decision, we adopt the assessment offered by Petitioner as it is consistent with the ’517 patent and the prior art before us. *See Okajima v. Bourdeau*, 261 F.3d 1350, 1355 (Fed. Cir. 2001).

B. Claim Construction

In this *inter partes* review, claims are construed using the same claim construction standard that would be used to construe the claims in a civil action under 35 U.S.C. § 282(b). 37 C.F.R. § 42.100(b) (2022). Under the principles set forth by our reviewing court, the “words of a claim ‘are generally given their ordinary and customary meaning,’” as would be understood by a person of ordinary skill in the art in question at the time of the invention. *Phillips v. AWH Corp*., 415 F.3d 1303, 1312 (Fed. Cir. 2005) (en banc) (quoting *Vitronics Corp. v. Conceptronic, Inc*., 90 F.3d 1576, 1582 (Fed. Cir. 1996)). “In determining the meaning of the disputed claim

limitation, we look principally to the intrinsic evidence of record, examining the claim language itself, the written description, and the prosecution history, if in evidence." *DePuy Spine, Inc. v. Medtronic Sofamor Danek, Inc.*, 469 F.3d 1005, 1014 (Fed. Cir. 2006) (citing *Phillips*, 415 F.3d at 1312–17).

Petitioner asserts that no claim terms need to be construed by the Board and all terms should be given their ordinary meaning. Pet. 9. Patent Owner agrees that the *Phillips* standard applies. Prelim. Resp. 2.

We determine that we need not expressly construe any claim terms at this juncture. *See Realtime Data, LLC v. Iancu*, 912 F.3d 1368, 1375 (Fed. Cir. 2019) ("The Board is required to construe 'only those terms . . . that are in controversy, and only to the extent necessary to resolve the controversy.'" (quoting *Vivid Techs., Inc. v. Am. Sci. & Eng'g, Inc.*, 200 F.3d 795, 803 (Fed. Cir. 1999))).

C. Principles of Law

A patent claim is unpatentable under 35 U.S.C. § 103(a) if the differences between the claimed subject matter and the prior art are such that the subject matter, as a whole, would have been obvious at the time the invention was made to a person having ordinary skill in the art to which said subject matter pertains. *KSR Int'l Co. v. Teleflex Inc.*, 550 U.S. 398, 406 (2007). The question of obviousness is resolved on the basis of underlying factual determinations including: (1) the scope and content of the prior art; (2) any differences between the claimed subject matter and the prior art; (3) the level of ordinary skill in the art; and (4) when in evidence, objective

indicia of nonobviousness. *Graham v. John Deere Co.*, 383 U.S. 1, 17–18 (1966).[7]

D. Priority Date of the '517 Patent

The '517 patent claims priority to a September 28, 2001, provisional Application No. 60/325,177 ("Provisional Application") through two branches of family. Ex. 1001, codes (60), (63). The '517 patent states that Application No. 12/978,537, now the '517 patent, has the following priority claims:

> Continuation of application No. 11/976,648 ["2007 CIP"], filed on Oct. 26, 2007, now Pat. No. 7,860,964, which is a continuation-in-part of application No. 10/259,497 ["2002 Application"], filed on Sep. 30, 2002, now Pat. No. 7,822,871, said application No. 12/978,537 is a continuation-in-part of application No. 11/932,162 ["2007 Continuation"], filed on Oct. 31, 2007, which is a continuation of application No. 10/259,497.

Ex. 1001, code (63).

Petitioner depicts the related applications in the diagram reproduced below:

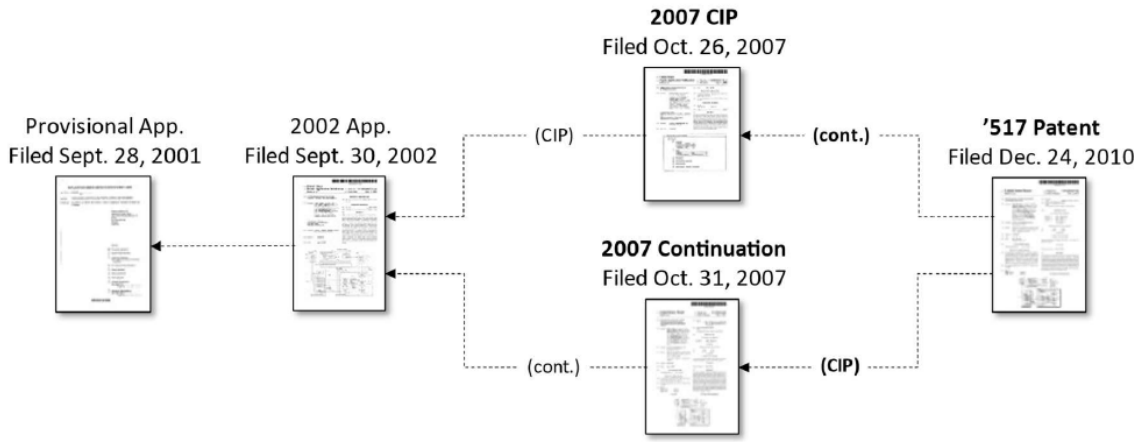

[7] No evidence of objective indicia of nonobviousness is presented by Patent Owner. *See generally* Prelim. Resp.

Referring to the figure above, Petitioner asserts that the ’517 patent is a “continuation-in-part twice over.” Pet. 6. Petitioner contends that the ’517 patent is entitled only to the priority date, at best, of October 26, 2007. *Id*. (citing Ex. 1003 ¶ 47). Petitioner asserts that the test for written description sufficiency is whether the prior application’s disclosure “reasonably conveys to those skilled in the art that the inventor had possession of the claimed subject matter as of the filing date.” *Id*. at 6–7 (citing *Ariad Pharms., Inc. v. Eli Lilly & Co*., 598 F.3d 1336, 1351 (Fed. Cir. 2010) (en banc); *Augustine Medical, Inc. v. Gaymar Indus*., Inc., 181 F.3d 1291, 1302–03 (Fed. Cir. 1999). Petitioner argues that no claim of the ’517 patent is entitled to a priority date before October 26, 2007, because neither the 2002 Application nor the Provisional Application contain a description of “one or more resource nodes [being] . . . mail exchange (MX) records,” which is recited in the independent claims. *Id*. at 7 (citing Ex. 1003 ¶ 48). Petitioner asserts that “[t]he concept of resource nodes as MX records never appears in the Provisional Application or the 2002 Application,” “and was first introduced” in the 2007 CIP. *Id*. (citing Ex. 1011; Ex. 1012; Ex. 1013; Ex. 1003 ¶ 48). Petitioner contends that all of the asserted prior art, Ben-Shaul, Biliris, Beaumont, and Hasan, were each published prior to the 2007 CIP filing date of October 26, 2007. *Id*. at 7–8.

Patent Owner disputes Petitioner’s assertion that no claim of the ’517 patent is entitled to a priority date before October 26, 2007. Prelim. Resp. 13–14. We do not find persuasive Patent Owner’s arguments that the claims of the ’517 patent are entitled to the provisional filing date.

“[T]o gain the benefit of the filing date of an earlier application under 35 U.S.C. § 120, each application in the chain leading back to the earlier

application must comply with the written description requirement of 35 U.S.C. § 112." *Zenon Envtl., Inc. v. U.S. Filter Corp.*, 506 F.3d 1370, 1378 (Fed. Cir. 2007) (quoting *Lockwood v. Am. Airlines, Inc.*, 107 F.3d 1565, 1571 (Fed. Cir. 1997)); *see also In re Hogan*, 559 F.2d 595, 609 (CCPA 1977). To comply with the "written description" requirement of 35 U.S.C. § 112, first paragraph, an applicant must "convey with reasonable clarity to those skilled in the art that, as of the filing date sought, he or she was in possession of the invention. The invention is, for purposes of the 'written description' inquiry, whatever is now claimed." *Vas-Cath, Inc. v. Mahurkar*, 935 F.2d 1555, 1563–64 (Fed. Cir. 1991) (emphasis omitted). The invention claimed does not have to be described in *ipsis verbis* to satisfy the written description requirement. *Union Oil Co. v. Atlantic Richfield* Co., 208 F.3d 989, 1000 (Fed. Cir. 2000). The question of written description support should not be confused, however, with the question of what would have been obvious to the artisan. Whether one skilled in the art would find the claimed invention obvious in view of the disclosure is not an issue in the "written description" inquiry. *In re Barker*, 559 F.2d 588, 593 (CCPA 1977). "A description which renders obvious the invention for which an earlier filing date is sought is not sufficient." *Lockwood*, 107 F.3d at 1572.

Patent Owner refers to the '517 patent and its disclosure that "[r]esources are used to specify the ATC answers to DNS queries," listing "at least five types of resource nodes—IP addresses, CNAME records, MX records, NS records, and Load sharing server sets." Prelim. Resp. 13–14 (citing Ex. 1001, 9:30–43). Dr. Shenoy testifies that a person of ordinary skill in the art "would have understood that similar to other types of the resource nodes, the MX record functions as an address for the email domain,

telling other servers where to deliver emails to that specific domain." Ex. 2015 ¶ 54 (referencing the '517 patent). Dr. Shenoy further refers to the '517 patent disclosure that "[t]hose skilled in the art will understand, upon reading this description, that different and/or other resource nodes may be used." *Id*. (citing Ex. 1001, 9:44–46). Patent Owner cites to disclosures from the '517 patent, but these disclosures do not appear in the Provisional Application. *See* Ex. 1011. Accordingly, this evidence, based on the later '517 patent, does not support that at the time of the Provisional Application there was possession of the feature that a resource node refers to a mail exchange (MX) record as expressly recited in the claims of the '517 patent.

Patent Owner also asserts that the Provisional Application provides written description on IP addresses, CNAME records, and/or NS records. Prelim. Resp. 14 (citing See Ex. 1011 ¶¶ 67–69). Patent Owner contends that a person of ordinary skill "would have understood, upon reading the Provisional Application, that the inventors were in possession of a system in which MX records and/or resource nodes are used to 'activate . . . the ATC system,'" (*id*., citing Ex. 1011 ¶¶ 67–69; Ex. 2015 ¶¶ 56–57), with Dr. Shenoy testifying that:

> Specifically, the Provisional Application provides:
>
> A subscriber may activate (turn up) the ATC system (DNS servers) in one of two ways: using a DNS CNAME or using NS delegation. Instead of using ATC to direct traffic for a single DNS hostname, the subscriber may have many different subdomains that it would like to direct to ATC. For example, the subscriber might want all downloads from di.customer.com handled by ATC, together with all of its subdomains, but have all other domains that it controls, such as www.customer.com, resolved by its own name server:
>
> dl.customer.com. => ATC

> any.thing.dl.custorner.com. => ATC
> www.customer.com. => not ATC
> customer.com.=> not ATC
>
> *Id*. at [0067]. It goes on to provide, "[i]n this case, instead of adding the CNAME record in the subscriber's DNS zone file, it simply delegates the di.customer.com. name to ATC via NS records in its zone file." *Id*. at [0068]. It further explains:
>
>> The delegation (NS-records) method is preferred as it is more flexible and offers all of the reliability, scalability and flexibility of ATC. After the initial contact for delegation, a properly operating resolver making occasional queries will not contact the subscriber's own name server or name servers again. The result is much better name resolution performance since the unnecessary overhead of routing each fresh DNS request through the subscriber's name server is eliminated. The CNAME method keeps the subscriber's own name server in the loop. That is, whenever the CNAME TTL expires, client resolvers will return to the subscriber's name servers to refresh the record. *Id*. at [0069].
>
> 56. A POSA would have understood, upon reading the Provisional Application, that MX records and/or resource nodes may be used to "activate the ATC system." *Id*. A POSA would also have understood that the inventors were in possession of a system that uses MX records or resource nodes to activate the ATC system.

Ex. 2015 ¶¶ 55–56.

Dr. Shenoy refers to portions of the Provisional Application that relate to alternate methods of directing traffic in the system. Ex. 1011 ¶¶ 67, 69. We do not discern that these disclosures refer to mail exchange (MX) records used as nodes. We also do not discern, and Dr. Shenoy does not explain, how he arrives at his conclusion that a person of skill would

understand that the cited portions of the disclosures in the Provisional Application lead to the understanding that they relate to mail exchange (MX) records used as nodes. *See* Ex. 2015 ¶ 56. Further, to the extent that these disclosures could perhaps lead an artisan to this conclusion, this alleged conclusion, if anything, appears to be based on an obviousness assessment rather than the required demonstration of possession of an invention by written description. Thus, based on this preliminary record, we do not find that Patent Owner has provided sufficient evidence that there is disclosure in the Provisional Application demonstrating written description support for MX records used as a resource node.

Instead, as Petitioner asserts, we do not discern any written description support of MX records used as a resource node in the Provisional Application or the 2002 Application. Thus, based upon this record, we also agree that October 26, 2007, is the priority date for the claims of the ’517 patent because the 2007 CIP is the earliest application in the priority chain that provides written description support for mail exchange (MX) records as resource nodes. Accordingly, on this preliminary record and for the purposes of this Decision, Ben-Shaul, Biliris, Beaumont, and Hasan are prior art to the claims of the ’517 patent under §§ 102(b) and 102(e).

E. Obviousness of Claims 1, 4–9, and 12–20 Over Beaumont and Hasan

Petitioner contends that claims 1, 4–9, and 12–20 would have been obvious over Beaumont and Hasan. Pet. 9–34. To support its contentions, Petitioner provides explanations as to how the combination of the prior art discloses each claim limitation. *Id*. Petitioner also relies upon the Declaration of Dr. Lin (Ex. 1003) to support its positions.

We begin our discussion with a brief summary of Beaumont and Hasan, and then address the evidence and arguments presented.

1. Beaumont (Ex. 1007)

Beaumont discloses a content delivery system in which a client requests access to content stored on content delivery servers. Ex. 1007, code (57), ¶ 18. In response to the request, a content provider DNS selects a content delivery server to provide the content. *Id.* ¶¶ 18, 19, 22. Figure 1 of Beaumont is reproduced below.

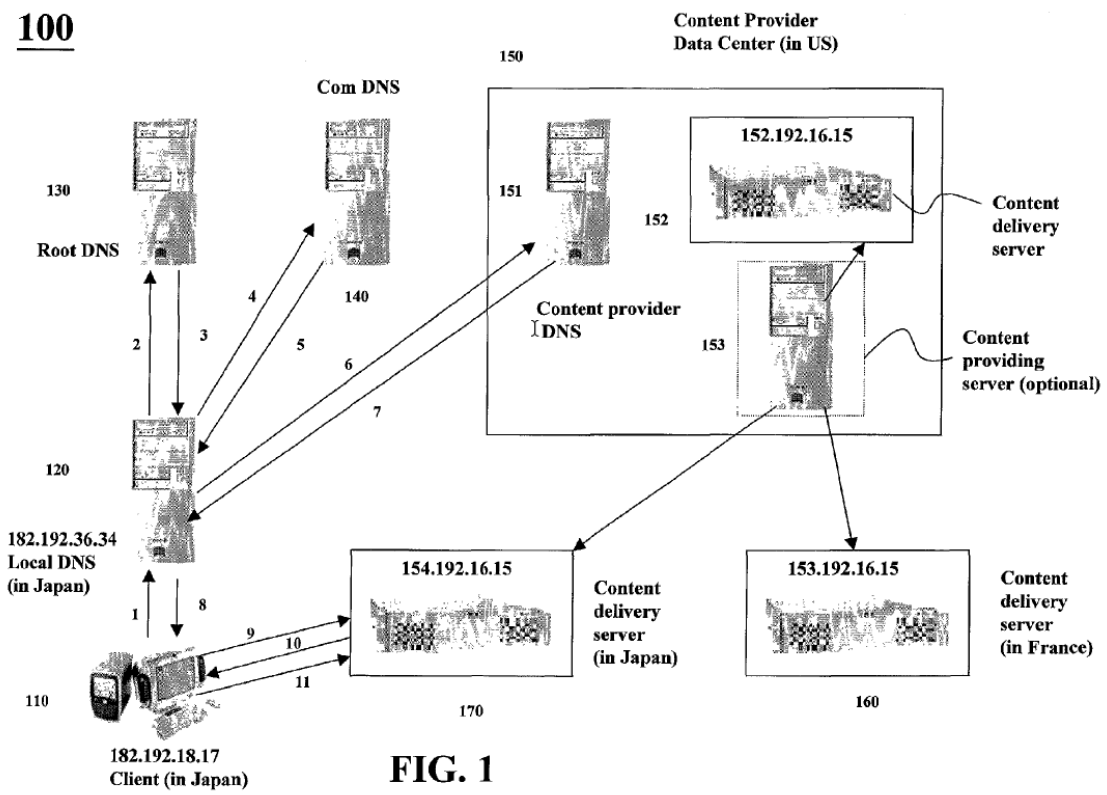

FIG. 1

Figure 1 of Beaumont, above, depicts client 110; content delivery servers 170, 180; and content provider DNS 151. Ex. 1007 ¶¶ 18, 19. Content provider DNS 151 selects the content server by identifying servers mapped to the client domain, for instance, (*id.* ¶¶ 22–24) and the selection of a particular server includes the use of a preference database (*id.* ¶ 23).

2. Hasan (Ex. 1006)

Hasan discloses a "virtual management system" providing an administrative interface with "devices, facilities, subscribers, log servers, and services" presented as objects. Ex. 1006, code (57). Hasan's system has multi-function service devices that are connected to a network management server to provide a graphical user interface to an administrative interface device for configuring the devices. *Id*. at 5:63–6:14, 6:37–58, 7:7–26, Fig. 4. The GUI provides a hierarchical layout of the system in a tree structure, with the root being the data center, and the branches being the facilities, subscribers, devices and log servers. *Id*. at 8:19–26. An administrator can configure device and service configuration data and policy information using the GUI. *Id*. at 7:7–26.

3. Discussion

a. Claims 1, 9, and 17

Independent claims 1, 9, and 17 have similar claim limitations, and Petitioner relies upon similar arguments and evidence in support of the challenges. *Compare* Pet. 15–22, *with id*. at 26–34. Patent Owner relies on common arguments for claims 1, 9, and 17. Prelim. Resp. 14–24. The arguments and evidence presented for claim 1, as well as the evaluation below, are therefore representative of all the independent claims.

Petitioner asserts that one of ordinary skill in the art would have been motivated to combine Beaumont and Hasan. Pet. 13–14. Petitioner argues that "Beaumont does not describe a specific interface for manually entering [policy and rules] preferences, Hasan discloses a GUI for exactly this type of policy specification." *Id*. at 14 (citing Ex. 1003 ¶ 70). Petitioner asserts that Hasan discloses that its Java-based, "platform independent" GUI takes the

form of a "familiar tree structure" and allows administrators to "configure device and service configuration data and policy information." *Id*. (citing Ex. 1006, code (57), 7:7–26, 8:19–29, 18:9–20). Petitioner asserts that the combination of Beaumont and Hasan would have been straightforward, and a person of skill "would have been motivated to incorporate Hasan's GUI so that administrators could conveniently configure preferences for Beaumont's DNS servers through an intuitive interface." *Id*. (citing, *inter alia*, Ex. 1003 ¶¶ 70–71; Ex. 1007 ¶ 23). Patent Owner does not present any arguments on the rationale to combine. *See generally* Prelim. Resp. We find that at this juncture Petitioner has presented sufficient rationale to combine Beaumont and Hasan.

Petitioner asserts that Beaumont's DNS server uses a preference table to resolve DNS requests, where the table includes custom preferences entered manually by users. Pet. 16 (citing Ex. 1007, code (57), ¶¶ 6, 23, 31, 32, 34, 35). Petitioner contends that Hasan discloses a GUI to define "configuration data and policy information" for servers within a network, and a person of ordinary skill "would have been motivated to incorporate Hasan's GUI into Beaumont's network to enable similar user preference configuration." *Id*. at 15 (citing Ex. 1006, 7:12–21, 6:59–63; Ex. 1007 ¶ 31; Ex. 1003 ¶ 75).

For element [1.pre.i], Petitioner contends that Beaumont discloses a method for using DNS servers, that is, adaptive traffic control name servers, to respond to DNS requests. Pet. 15 (citing Ex. 1007 ¶¶ 4, 5, 17, 23). Petitioner addresses "policy-based traffic direction" (limitation [1.pre.1]) and "policy for the direction of network traffic" (limitation [1.b]) by identifying that "a content provider DNS server that directs requests (traffic)

according to a configurable preference table (policies)" and that a "Beaumont-Hasan GUI would enable an administrator to set policies for a selected content delivery server," where "the combined GUI 'would support[] the setting of said at least one policy using a decision tree representing rules.'" *Id*. at 15–18 (citing, *inter alia*, Ex. 1007 ¶¶ 6, 17, 23, 29–31, Figs. 1–3; Ex. 1003 ¶¶ 72, 76, 77). Dr. Lin testifies that "[f]or example, given the description in Hasan, selecting a server would bring up a menu enabling an administrator to assign the preferences shown in Fig. 3 of Beaumont." Ex. 1003 ¶ 77 (citing Ex. 1006, 10:25–34; Ex. 1007, Figs. 2, 3, ¶¶ 29–31). Petitioner argues that DNS servers are adaptive because the preferences for directing traffic are updated dynamically and account for current network conditions. Pet. 16 (citing Ex. 1007 ¶¶ 19, 30, 31).

Patent Owner contends that the Petition fails to teach the "policy" limitations of the claim. Prelim. Resp. 15–20. Patent Owner refers to the claims and asserts that a policy is a "course, rule, or principle of action to direct traffic of the underlying servers." *Id*. at 15–16 (citing Ex. 1001, 1:43–2:7; Ex. 2015 ¶ 59). Patent Owner contends that "the 'policy' or 'policy-based' features are structurally and functionally different from the 'geographical locations and the capacities of the underlying servers,'" so "the geographical locations and the capacities of the underlying servers are the inputs that the policy uses to determine traffic direction." *Id*. at 17 (citing Ex. 1001, 6:33–44, 15:28–35; Ex. 2015 ¶ 61). Patent Owner asserts that Beaumont does not disclose the claimed policy-based features because Petitioner points to preference tables, but "[a] preference table is not a policy." *Id*. at 18. Patent Owner argues that the preference tables include "locations, capabilities, or statuses of a server, such as delivery serve

address, destination domain, estimated distance, number of times being selected per hour, health, and time-to-live," which is a listing of information, but that does not provide "the claimed course, rule, or principle of action." *Id*. at 18–19. Patent Owner alleges that "[t]he information in Beaumont's preference table could be used by a policy to determine which group of servers to direct the request, but Beaumont's preference table itself does not expressly or inherently disclose any policy." *Id*. at 19.

We agree with Patent Owner that its understanding of a policy as a rule is consistent with the disclosure in the '517 patent that "a policy may be created by generating a decision tree representing the ATC rules." *See* Ex. 1001, 9:1–3. We do not agree with Patent Owner, however, that Beaumont in combination with Hasan does not disclose the claimed policy features as claimed.

As discussed above, Petitioner relies upon Beaumont in combination with Hasan with its teachings on the use of Java-based GUIs in the form of a tree structure that allows administrators to configure device and service configuration data, as well as policy information. *See* Ex. 1006, code (57), 7:7–26, 8:19–29. For the policy teachings, Petitioner relies upon Beaumont's "content provider DNS server that directs requests (traffic) according to a preference table (policy)." Pet. 15–16 (citing Fig. 1, ¶¶ 6, 17, 23). Petitioner also asserts that the Beaumont-Hasan GUI would enable an administrator to set policies for a selected content delivery server to allow setting server preferences and rules. *Id*. at 17–18 (citing, *inter alia*, Ex. 1007 ¶¶ 76–77). In support, Dr. Lin testifies that:

> The Beaumont-Hasan GUI would enable an administrator to select a content delivery server (e.g., in Japan) and set policies for that server. Hasan, 8:30–36, 10:25–34, 10:53–67; Beaumont,

> [0031]. For example, given the description in Hasan, selecting a server would bring up a menu *enabling an administrator to assign the preferences shown in Fig. 3 of Beaumont*. Hasan, 10:25–34; Beaumont, Figs. 2, 3, [0029]–[0031]. A POSITA would thus have recognized the combined GUI to "support[] the setting of said at least one policy using a decision tree representing rules" because it is presented in a "familiar tree structure" and would allow users to set server preferences and rules.

Ex. 1003 ¶ 77 (emphasis added). Beaumont provides support for Dr. Lin's testimony. Beaumont discloses that "rules such as selecting one [a server] based on user preferences can be used . . . [f]or example, a preference number can be assigned to each content delivery server and a destination domain." Ex. 1007 ¶ 31. Beaumont further states that "FIG. 3 shows an illustrative example of incorporating preference numbers in a column." *Id*. Thus, contrary to Patent Owner's arguments, Beaumont discloses that rules or policies, represented by the preference number, are represented in the table shown in Figure 3 of Beaumont. Dr. Lin also testifies that in the Beaumont-Hasan combination "the GUI supports the setting of" policy is taught. Ex. 1003 ¶ 77. Hasan provides support that service policies can be modified by the use of a GUI. *See* Ex. 1006, 8:30–36, 10:25–34, 10:53–67. Accordingly, in the combination of Beaumont and Hasan, wherein the preference database is replaced by the GUI decision tree, Petitioner has provided sufficient evidence at this juncture that the combination of Beaumont and Hasan teaches that the GUI obtains a policy, the preference number, for the direction of network traffic, where the GUI supports the setting of the policy using a decision tree representing rules.

This disclosure provides support for Petitioner's assertion that Beaumont, in combination with Hasan, teaches the use of policies as claimed for direction of network traffic. Accordingly, at this juncture, Petitioner has presented sufficient evidence that the combination of Beaumont and Hasan teaches element [1.pre.i] and the policy feature of other limitations.

Petitioner provides evidence and argument in support of the teaching of element [1.pre.ii] and limitations [1.a], [1.b], and [1.c]. *See* Pet. 16–18. Patent Owner does not currently contest Petitioner's showing. *See generally* Prelim. Resp. We have reviewed the argument and evidence and, at this juncture, Petitioner has presented sufficient evidence that the combination of Beaumont and Hasan teaches element [1.pre.ii] and limitations [1.a], [1.b], and [1.c].[8]

For limitation 1[d], Petitioner asserts that the combined Beaumont-Hasan system incorporates Hasan's GUI, which provides "a hierarchical layout," where in Beaumont's network, network, "higher-level branches ('branch nodes') in the GUI" are represented by "decision criteria (e.g., server health (e.g., working or down), destination domains (e.g., 182.192))" and where "subbranches ('resource nodes')" are represented by "individual delivery (content) servers that fulfill the decision criteria and are thus 'answers' provided in response to a DNS request." Pet. 19 (citing Ex. 1007, Fig. 2; Ex. 1003 ¶ 79). Petitioner explains that Beaumont teaches that its content provider DNS server selects a content delivery server closest to a

[8] Because Petitioner has sufficiently demonstrated at this juncture that the combination of Beaumont and Hasan teaches the subject matter recited in the preamble, we need not decide whether the preamble is limiting for purposes of this Decision.

client (Ex. 1007 ¶ 19) using an "estimated distance from each mapped content delivery server to that destination domain" so "Beaumont's system first identifies working servers sharing the destination domain of the client (182.192) and then selects a server from within that set to handle the request based on a distance or other preferences." *Id*. (citing Ex. 1007 ¶¶ 23, 24, 31; Ex. 1003 ¶ 180). Petitioner contends that, as an example, "*Beaumont's* DNS server selects from content delivery servers represented in rows R2, R3, and R4 in FIG. 2 because they 'are mapped to the same destination domain, 182.192,'" so "these content delivery servers would be grouped under the same destination domain and the destination domain would thus act as a decision criterion." *Id*. at 19–20 (citing Ex. 1007 ¶ 28; Ex. 1003 ¶ 82). Petitioner further asserts that the content delivery servers represent "'one or more answers to be provided in response to a Domain Name Service (DNS) request' because these servers are selected for handling the request." *Id*. at 20 (citing Ex. 1003 ¶ 83; Ex. 1007 ¶¶ 23, 24, 26).

Patent Owner argues that the combination of Beaumont and Hasan does not teach the "the one or more branch nodes specify one or more decision criteria to be applied" portion of limitation [1.d]. Prelim. Resp. 20–24. Patent Owner asserts that "Petitioner points to a table as satisfying the decision criteria, but the table does not have any criteria." *Id*. at 20. Patent Owner contends that the claim limitation "basically has two elements: (1) the decision criteria to be applied, and (2) the one or more branch nodes needed to specify the criteria." *Id*. (citing Ex. 2015 ¶ 70). Patent Owner argues that in the '517 patent "'decision criteria to be applied' are criteria for selecting or grouping different servers." *Id*. (citing Ex. 1001, 7:37–39, 9:6–8, Figs. 10(a) –(o)). Patent Owner further refers to Figure

10(b) of the ’517 patent, which refers to the “Splits” in routing, and asserts that “in this example, these ‘decision criteria’ need to be specified in the branch node of the decision tree in Figure 10(b).” *Id*. at 21 (citing Ex. 2015 ¶ 71). Patent Owner contends that in Beaumont, Petitioner “suggests that sharing the destination domain satisfies the ‘decision criteria’ limitation because it provides ‘answers’ in response to a DNS request” in accordance with Beaumont’s Figure 2. *Id*. (citing Ex. 2015 ¶ 72). Patent Owner further contends that Beaumont’s teaches that content delivery servers in rows R2, R3, and R4 can be grouped under the same destination domain, but this does not disclose the claimed decision criteria. *Id*. at 22. Patent Owner argues that this is so because “the elements of rows R2, R3, and R4 of Beaumont’s preference table are—at most—listings of the locations, capabilities, or statuses of a server” and “[t]hat one can map them to their destination domains does not indicate why they are mapped and what criteria were used to make that decision.” *Id*. (citing Pet. 19–20; Ex. 1007, Fig. 2; Ex. 2015 ¶ 74). Patent Owner further asserts that “even if Beaumont’s selection for rows R2, R3, and R4 was based on grouping different content delivery servers based on the shortest estimated distance to the client, then that selection instruction would need to be explicitly specified in the ‘one or more branch nodes’ associated with the preference table.” *Id*. at 23.

At this juncture we are not persuaded by Patent Owner’s arguments. The ’517 patent lends guidance on the claimed “branch nodes,” stating “[a]t the branches of this tree (*referred to as branch nodes*) *the user specifies the various decision criteria that the user wants to apply*.” Ex. 1001, 9:6–8 (emphasis added). Claim 1 itself recites that the specification of decision criteria for the branch nodes has criteria that is selected from “world zones,

countries, states, time zones, and blocks of Internet Protocol (IP) addresses" (limitation [1.e.ii]). Consistent with this, Petitioner identifies Beaumont's destination domains in tables as the criteria that are used or applied in decision making.

Patent Owner asserts that Beaumont fails because the mapping to the destination domains "does not indicate why they are mapped and what criteria were used to make that decision." Prelim. Resp. 22. Patent Owner points to Figure 10(b) of the '517 patent, which includes "Splits" selection instructions or rules, and asserts that "in this example, these 'decision criteria' need to be specified in the branch node of the decision tree in Figure 10(b)." *Id*. at 21. Patent Owner asks too much. As Patent Owner notes, however, Figure 10(b) is an example only. In light of the disclosure for a "branch node" in the '517 patent cited above (Ex. 1001, 9:6–8), we decline to add a requirement that the branch node has to include instructions (rules or policy) that are used to make decisions, such as where "Splits" are required actions. *See id*. at 9:1–3.

Accordingly, at this juncture, Petitioner has presented sufficient evidence that the combination of Beaumont and Hasan teaches limitation [1.d].

Petitioner provides evidence and argument in support of the teaching of limitations [1.e.i], [1.e.ii], 1[f], and [1.g]. *See* Pet. 20–22. Patent Owner does not present any arguments on these limitations. *See generally* Prelim. Resp. We have reviewed the argument and evidence and, at this juncture, Petitioner has presented sufficient evidence that the combination of Beaumont and Hasan teaches limitations [1.e.i], [1.e.ii], 1[f], and [1.g].

Accordingly, after consideration of the contentions and evidence of record at this preliminary phase, we conclude that Petitioner has demonstrated a reasonable likelihood that it would prevail in showing that claims 1, 9, and 17 are unpatentable under 35 U.S.C. § 103(a) as obvious over Beaumont and Hasan.

b. Dependent Claims 4–8, 12–16, and 18–20

Petitioner provides evidence and argument in support of teaching of dependent claims 4–8, 12–16, and 18–20 by Beaumont-Hasan. *See* Pet. 23–34. Patent Owner does not present any arguments on these claims. *See generally* Prelim. Resp. We have reviewed the argument and evidence and, at this juncture, Petitioner has presented sufficient evidence that the combination of Beaumont and Hasan teaches dependent claims 4–8, 12–16, and 18–20. Accordingly, after consideration of the contentions and evidence of record at this preliminary phase, we conclude that Petitioner has demonstrated a reasonable likelihood that it would prevail in showing that claims 4–8, 12–16, and 18–20 are unpatentable under 35 U.S.C. § 103(a) as obvious over Beaumont and Hasan.

F. Obviousness of Claims 2, 3, 10, and 11 Over Beaumont, Hasan, and Biliris

Petitioner also asserts that dependent claims 2, 3, 10, and 11 would have been obvious over the combination of Beaumont, Hasan, and Biliris. Pet. 35–39. Biliris is directed to content delivery networks having an architecture where content requests are shared among multiple content distribution networks to better balance loads. Ex. 1008, code (57), ¶¶ 6, 7. In Biliris, subdomains may be served by a DNS server of a specified subdomain. *Id*. ¶¶ 25, 26. Petitioner asserts that a person of ordinary skill in the art would have been motivated to combine Bilirus with Beaumont and

Hasan in order to improve load distribution. Pet. 35–37 (citing Ex. 1003 ¶ 135).

Patent Owner does not present any arguments on these claims. *See generally* Prelim. Resp. We have reviewed the argument and evidence and, at this juncture, Petitioner has presented sufficient evidence that the Beaumont, Hasan, and Bilirus renders obvious dependent claims 2, 3, 10, and 11. Accordingly, after consideration of the contentions and evidence of record at this preliminary phase, we conclude that Petitioner has demonstrated a reasonable likelihood that it would prevail in showing that claims 2, 3, 10, and 11 are unpatentable under 35 U.S.C. § 103(a) as obvious over Beaumont, Hasan, and Biliris.

G. Obviousness of Claims 1–20 Over Ben-Shaul, With or Without Hasan

Petitioner contends that claims 1–20 would have been obvious over Ben-Shaul, with or without Hasan. Pet. 39–74. To support its contentions, Petitioner provides explanations as to how the combination of the prior art discloses each claim limitation. *Id*. Petitioner also relies upon the Declaration of Dr. Lin (Ex. 1003) to support its positions.

We begin our discussion with a brief summary of Ben-Shaul, and then address the evidence and arguments presented.

1. Ben-Shaul (Ex. 1005)

Ben-Shaul discloses a "centralized and differentiated content and application delivery system" allowing delivery of content "based on regional and temporal preferences, client identity and content priority." Ex. 1005, code (57). Ben-Shaul's network includes edge servers and EdgeDNS

servers, as shown in Figure 5 of Ben-Shaul, reproduced below, which depicts a content delivery system of an embodiment. *Id.* ¶ 155.

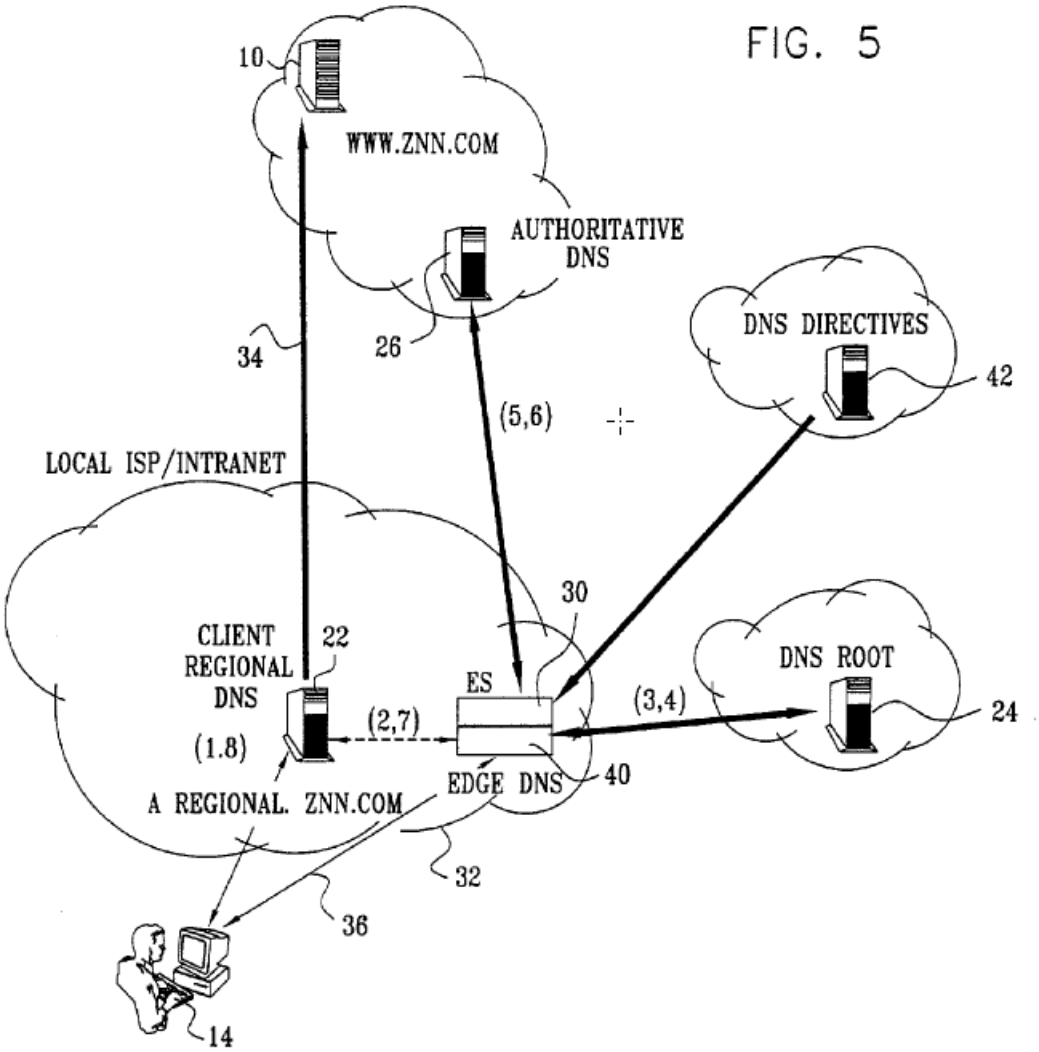

Figure 5, above, depict an embodiment of Ben-Shaul's system, which includes client 14, Edge DNS server 40, and edge server (ES) 30. Ex. 1005 ¶ 177. The EdgeDNS server resolves DNS requests, returning the IP address of a selected edge server. *Id.* ¶ 41. DNS requests are resolved based on policies (*id.* ¶¶ 40, 48, 177) defined through DNS directives stored on a policy control server (*id.* ¶¶ 72, 176, 177).

2. Discussion

Similar to the Beaumont grounds, the only currently disputed issues are whether Ben-Shaul teaches the policy features and branch nodes recited in independent claims 1, 9, and 17. *See* Prelim. Resp. 24–34.

For the policy features recited, Petitioner contends that DNS requests in Ben-Shaul are resolved based on policies. Pet. 43 (citing Ex. 1005 ¶¶ 39, 119, 148, 171, 177). Petitioner alleges that "*Ben-Shaul*'s front edge tool GUI is for direction of network traffic and supports the setting of policies using a decision tree representing rules." *Id*. at 47. Petitioner relies upon Ben-Shaul's front edge tool, which Petitioner asserts to "enable[] 'predefin[ing] meaningful groups of edge servers' (content servers) 'to simplify the application of policies applicable to a set of related edge servers.'" *Id*. (citing Ex. 1005 ¶ 309). Petitioner alleges that "[t]he front edge tool is a GUI supporting grouping content servers in a hierarchical tree (supporting the setting of at least one policy)." *Id*. at 47–48 (citing Ex. 1005 ¶¶ 309–313, 352). Petitioner contends that "[b]ecause the front edge tool is for 'simplify[ing] the application of policies,' including policies related to network traffic, it is for direction of network traffic." *Id*. at 48 (citing Ex. 1005 ¶¶ 309, 39; Ex. 1003 ¶162). Petitioner also asserts that the front edge tool's hierarchical map is a "decision tree," and a person of skill "would have understood that the hierarchical map is a 'decision' tree representing rules because directives apply based on inclusion of edge servers within the groups." *Id*. (citing Ex. 1005, Fig. 10; Ex. 1003 ¶ 163).

Petitioner additionally asserts that "Ben-Shaul explains that the EdgeDNS servers redirect end-user requests to particular content servers based on 'DNS and HTTP redirections policies' implemented in CDML."

Pet. 48–49 (citing Ex. 1005 ¶¶ 38, 39). Petitioner argues that "[t]hese policies are thus for "direction of network traffic" (*id*.), and are set through a graphical CDML editor (GUI). *Id*. at 49 (citing Ex. 1005 ¶¶ 182, 189; Ex. 1003 ¶ 164). Petitioner asserts that the Ben-Shaul discloses that policies set through CDML editor 50 may "nest[]" in a hierarchy." *Id*. at 48–49 (citing Ex. 1005 ¶ 196).

Petitioner asserts that a person of skill would have been motivated to combine the GUIs in Ben-Shaul. Pet. 48 (citing Ex. 1003 ¶ 164). More specifically, Petitioner asserts that "[t]o the extent they are separate, it would have been obvious to implement *Ben-Shaul's* front edge tool and CDML editor as a single GUI." *Id*. at 49 (citing Ex. 1005 ¶ 165). Petitioner argues that "[b]oth tools are used to edit CDML code (Ben-Shaul, [0350], [0431]), both are implemented at the same origin server (*id*., [0211], [0182]), and both are used to shape policy for direction of network traffic (*id*., [0038]-[0039], [0182], [0189], [0196]-[0197], [0309]-[0312])." *Id*. Petitioner asserts that "[c]ombining the tools into a single GUI ('the Ben-Shaul single GUI') would streamline policy setting, and a POSITA would have understood the benefits of providing policy setters with a single easy-to-use interface such as the front edge tool's tree structure." *Id*. (citing 1005, Fig. 10; Ex. 1003 ¶ 165). Petitioner further asserts that "[i]n the Ben-Shaul single GUI, policy setters could both define groups of servers as described in relation to the front edge tool (Ben-Shaul, [0309]-[0313]) and set the policy for network traffic direction applicable to each group of servers as described in relation to the CDML editor (*id*., [0038]-[0039], [0182], [0189], [0196]-[0197])." *Id*. at 49–50 (citing Ex. 1003 ¶ 165).

Patent Owner contends that Petitioner's allegations are directed to Ben-Shaul's EdgeDNS providing the appropriate content server based on edge server policy and that Ben-Shaul's front edge tool GUI is for direction of network traffic and supports the setting of policies using a decision tree representing rules. Prelim. Resp. 25 (citing Pet. 45, 47, 48; Ex. 2015 ¶ 80). Petitioner asserts that the Patent Office previously considered Ben-Shaul's teachings in the prosecution of two predecessor patents to the '517 patent and ultimately allowed the claims. *Id*. at 25–26. Patent Owner alleges that the arguments that Petitioner makes here are "very similar" to the arguments that the Examiner previously made in the prosecution of the predecessor patents. *Id*. at 26 (citing Ex. 2002, 232–241, 290–291; Ex. 2003, 1237–1303, 1315–1319). Patent Owner asserts "That the Office did not apply this same rejection—which Patent Owner twice overcame—to the '517 patent indicates that the Office did not find it compelling." *Id*. at 28 (citing Ex. 2015 ¶ 85).

Patent Owner also asserts that, on the merits, Ben-Shaul does not teach or suggest the policy feature of the patent claims, and, particularly, that claimed policy is implemented for "direction of network traffic." Prelim. Resp. 28. Patent Owner argues that the "edge server policy" in Ben-Shaul is different network functionality than the claimed policy, where the "edge server policy" may control which resource zones are directed to the edge servers, "but that does not produce any decision for direction of network traffic." *Id*. (citing Ex. 1005 ¶¶ 41, 176–177; Ex. 2015 ¶ 86). Patent Owner contends that "Ben-Shaul's 'edge server policy' that redirects requests to the regional site is only the first step of the request redirection process" and this "first step request direction (redirected by the edge server) takes place ***prior***

to interactions between origin servers and edge servers, and then merely forwards these requests to certain resource zones." *Id*. at 28–29 (citing Ex. 1005 ¶ 181).

As discussed above, Petitioner makes arguments based on Ben-Shaul's front edge tool GUI which is used predefine groups of edge servers. *See* Pet. 47–48. Petitioner, however, also makes assertions using the teachings of the policy features based on the implementation of Ben-Shaul's front edge tool and CDML, where it is alleged that policies for the direction of network traffic are set through a graphical CDML editor (GUI). *Id*. at 48–50. Petitioner asserts that combining these tools "would streamline policy setting" and "provid[e] policy setters with a single easy-to-use interface." *Id*. at 49.

Patent Owner's arguments appear to be solely directed to Ben-Shaul's teachings relating to the redirection of requests to regional sites and do not address Petitioner's contentions relating to the implementation of the front edge tool with CDML, which would define groups of servers in relation to the front edge tool and set policy for network traffic direction for each group of users. *See* Prelim. Resp. 24–30; Pet. 48–50. For instance, Patent Owner argues that the redirection of redirects requests to the regional sites is only the first step and takes place prior to interactions between origin servers and edge servers, but Patent Owner does not address the combination of Ben-Shaul's redirection to regional site in combination with its CDML network traffic direction tools, which Petitioner also relies upon. With the combination of the Ben-Shaul's front edge tool and CDML editor as a single GUI, and with the front end tool defining groups of edge servers (content servers) and the CDML editor used for specifying content delivery policies,

we find that the evidence in this preliminary record supports that Ben-Shaul teaches a "policy for direction of network traffic" in the combination. Ex. 1005 ¶¶ 182, 309. Further, both the CDML editor and the front end tool are graphical tools, so the evidence provides support that they are combinable. *Id*. ¶¶ 182, 311–313.

Additionally, as to Patent Owner's arguments regarding the prosecution histories of the predecessor patents, we do not find these arguments persuasive at this juncture. Specifically, we are not persuaded that the Examiner's statements on Ben-Shaul would apply to the circumstances here in view of the differences of the claims at issue and Petitioner's specific assertions concerning Ben-Shaul. Instead, we find that Petitioner has provided sufficient evidence that Ben-Shaul teaches the policy features of the claims at this juncture.

Turning to "branch nodes," Petitioner relies on Ben-Shaul's teaching that the front end tool and GUI "allow administrators to construct hierarchies of edge servers (a 'decision tree') for effecting directives." Pet. 52–53 (citing Ex. 1005 ¶ 309). Petitioner refers to annotated Figure 10 of Ben-Shaul, reproduced below. *Id*.

FIG. 10

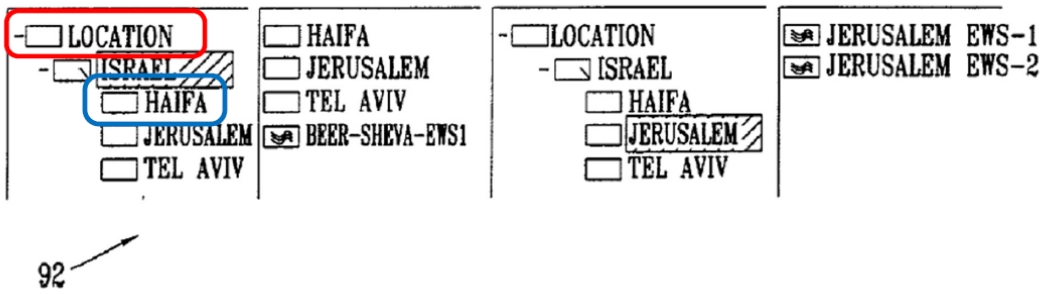

Annotated Figure 10, above, depicts "a hierarchical view of a list of edge servers according to the embodiment." Ex. 1005 ¶ 160. Petitioner asserts

that the internal nodes, shown in red, are the claimed "branch nodes" that represent logical aggregation of nodes. Pet. 53. Petitioner contends that administrators may construct a group based on region, as shown in Figure 10, "such that policies are applied to any edge server within the group." *Id*. (citing Ex. 1005 ¶¶ 39, 309, 285, 289, 308, 309). Petitioner argues that "[t]he groups defined by the internal nodes 'specify one or more decision criteria to be applied,' because they 'represent logical aggregations of nodes' based on a particular decision criteria, e.g., location," where a "DNS request is thus directed to an edge server based on that server's association with the group." *Id*. (citing Ex. 1005 ¶¶ 44, 310, 311; Ex. 1003 ¶ 174). We find that has provided sufficient evidence that Ben-Shaul teaches limitation [1.d] at this juncture.

Patent Owner contends that Ben-Shaul does not teach "the one or more branch nodes specify one or more decision criteria to be applied." Prelim. Resp. 30–33. Patent Owner's arguments are similar to those presented for Beaumont's "branch node" assertions. We do not find Patent Owner's arguments persuasive for similar reasons discussed above for Beaumont. Again, the '517 patent lends guidance on the claimed "branch nodes," stating "[a]t the branches of this tree (referred to as branch nodes) the user specifies the various decision criteria that the user wants to apply." Ex. 1001, 9:6–8 (emphasis added). Claim 1 itself recites that the specification of decision criteria for the branch nodes has criteria that is selected from "world zones, countries, states, time zones, and blocks of Internet Protocol (IP) addresses" (limitation [1.e.ii]). Consistent with this, Petitioner identifies the location of servers as the criteria that are used or applied in decision making. Again, we decline to add a requirement that the

branch node has to include instructions (rules or policy) that are used to make decisions, such as where "Splits" are required actions. *See* Ex. 1001, 9:1–3.

Petitioner provides evidence and argument in support of the teaching of the other limitations of the independent claims and the dependent claims. Patent Owner does not present any arguments on these limitations. *See generally* Prelim. Resp. At this juncture, Petitioner has presented sufficient evidence that the Ben-Shaul, with or without Hasan renders obvious claims 1–20.

After consideration of the contentions and evidence of record at this preliminary phase, we conclude that Petitioner has demonstrated a reasonable likelihood that it would prevail in showing that claims 1–20 are unpatentable under 35 U.S.C. § 103(a) as obvious over Ben-Shaul, with or without Hasan.

III. CONCLUSION

For the foregoing reasons, we have determined that there is a reasonable likelihood that the Petitioner would prevail with respect to at least one of the claims challenged in the Petition. We therefore institute trial as to all challenged claims on all grounds stated in the Petition.

IV. ORDER

Upon consideration of the record before us, it is:

ORDERED that *inter partes* review of claims 1–20 of the '517 patent is instituted on all grounds in the Petition; and

FURTHER ORDERED that pursuant to 35 U.S.C. § 314(c) and 37 C.F.R. § 42.4, notice is hereby given of the institution of a trial; the trial will commence on the entry date of this decision.

UNITED STATES PATENT AND TRADEMARK OFFICE

BEFORE THE PATENT TRIAL AND APPEAL BOARD

GOOGLE LLC,
Petitioner,

v.

SANDPIPER CDN, LLC,
Patent Owner.

IPR2025-00806
Patent 8,645,517 B2

CYGAN, *Administrative Patent Judge*, concurring.

I agree with the Majority's determination that at least one claim would have been obvious over the combination of Ben-Shaul and Hasan. However, I respectfully disagree with the Majority's determination that claim 1 would have been obvious over the combined teachings of Beaumont and Hasan. Thus, I concur in the decision to institute trial.

With respect to the limitation, "a decision tree representing rules," the Majority determines that Beaumont's "preference number" represents rules. As an initial matter, this position is unsupported by the Petition, which does not assert that Beaumont teaches that its preference numbers teach the claimed rules. Pet. 16–18. Further, Beaumont's "preference number" is a number, not a rule. Beaumont, Fig. 3. Beaumont's preference numbers are

manually entered, with no description as to how they are determined, or whether rule or whim guides the user's preference. *Id.* ¶ 31. The Majority does not point to any rule that the number represents, and cannot, because Beaumont states that its traffic-directing rules may be based on user preferences, not that its preferences are based on rules. *Id.* Beaumont's DNS server applies "rules such as selecting [a server] based on user preferences," including selecting the server as a function of a retrieved preference number and/or other factors set forth in its preference table. *Id.* Although Beaumont teaches rules for directing traffic to servers, Beaumont's rules are located in its DNS server, not in its preference table that Petitioner solely relies upon for the contents of the decision tree.

Nor does Petitioner rely on Hasan for any teaching of rules in its decision tree. Petitioner relies on Hasan only for a "'platform independent' GUI [that] takes the form of a 'familiar tree structure'" so as to "organize information." Pet. 14. The reason given by Petitioner for the combination is "to incorporate Hasan's GUI so that administrators could conveniently configure preferences for Beaumont's DNS servers through an intuitive interface." *Id.* Consequently, Petitioner has not explained how the combination of Beaumont and Hasan would teach or suggest a decision tree representing rules.

PETITIONER:

Erika Arner
Kara Specht
Cara Regan
Sydney Kestle
Daniel Tucker
Christopher Anderson
FINNEGAN, HENDERSON, FARABOW,
GARRETT, & DUNNER LLP
erika.arner@finnegan.com
kara.specht@finnegan.com
cara.regan@finnegan.com
sydney.kestle@finnegan.com
daniel.tucker@finnegan.com
christopher.anderson@finnegan.com

PATENT OWNER:

Jason Eisenberg
Dan Block
STERNE, KESSLER, GOLDSTEIN
& FOX PLLC
jasone-ptab@sternekessler.com
dblock-ptab@sternekessler.com