US 20060095532A1

(19) United States

(12) Patent Application Publication

(10) Pub. No.: US 2006/0095532 A1

(43) Pub. Date: May 4, 2006

O'Rourke et al.

(54) METHOD AND APPARATUS FOR SELECTING CACHE AND PROXY POLICY

(75) Inventors: **Bret P. O'Rourke**, Kirkland, WA (US); **Dawson F. Dean**, Redmond, WA (US); **Chih-Kan Wang**, Taipei (TW); **Mark D. Van Antwerp**, Redmond, WA (US); **David J. Roth**, Seattle, WA (US); **Chadd B. Knowlton**, Bellevue, WA (US)

Correspondence Address:
LEE & HAYES PLLC
421 W RIVERSIDE AVENUE SUITE 500
SPOKANE, WA 99201

(73) Assignee: **Microsoft Corporation**, Redmond, WA

(21) Appl. No.: **11/285,048**

(22) Filed: **Nov. 22, 2005**

Related U.S. Application Data

(63) Continuation of application No. 09/893,373, filed on Jun. 26, 2001, now Pat. No. 6,986,018.

Publication Classification

(51) **Int. Cl.**
G06F 15/167 (2006.01)

(52) **U.S. Cl.** **709/213**

(57) **ABSTRACT**

A cache server includes a media serving engine that is capable of distributing media content. A cache engine is coupled to the media serving engine and capable of caching media content. A set of cache policies is accessible by the cache engine to define the operation of the cache engine. The cache server can be configured to operate as either a cache server or an origin server. The cache server also includes a data communication interface coupled to the cache engine and the media serving engine to allow the cache engine to receive media content across a network and to allow the media serving engine to distribute media content across the network. The cache policies include policies for distributing media content from the media server, policies for handling cache misses, and policies for prefetching media content.

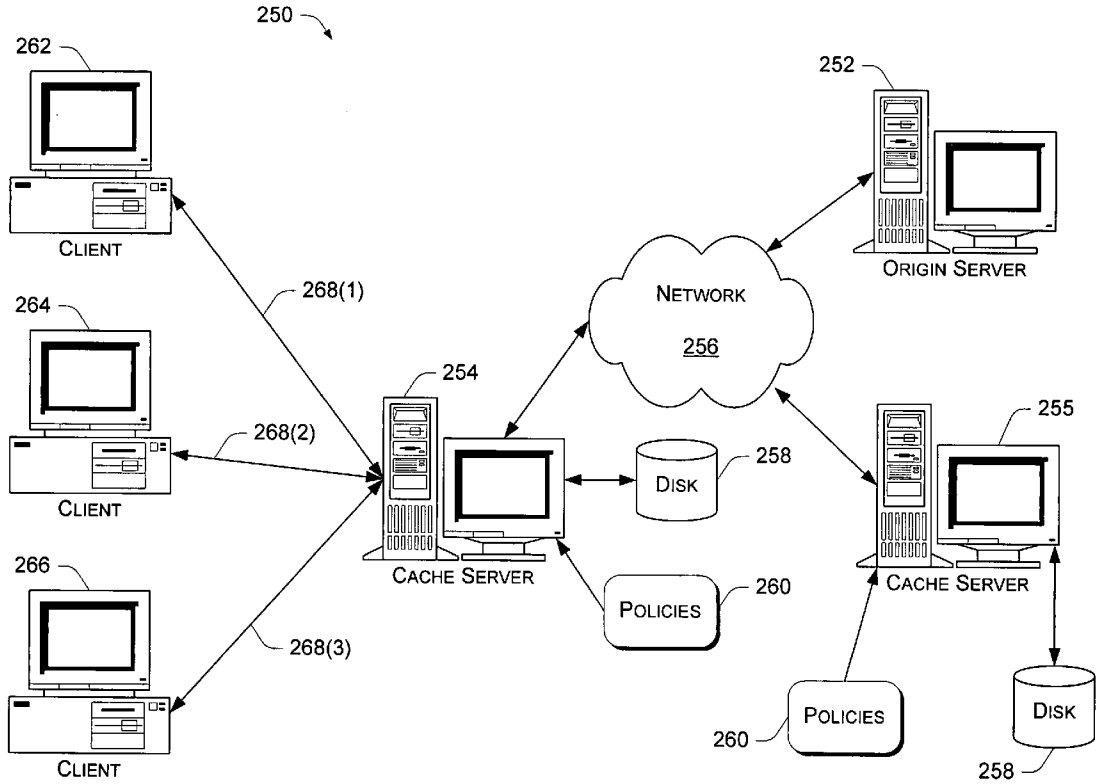

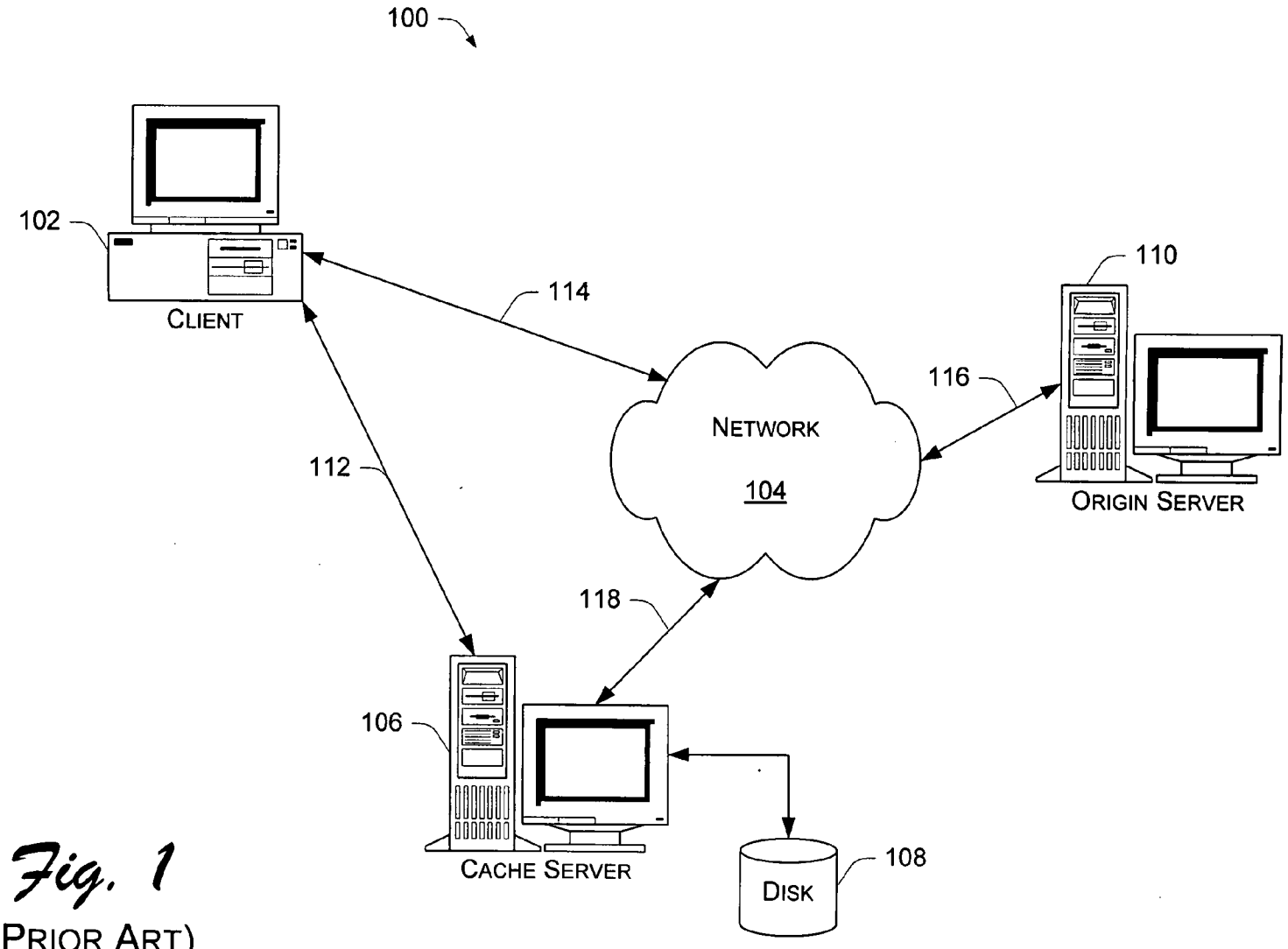

Fig. 1
(PRIOR ART)

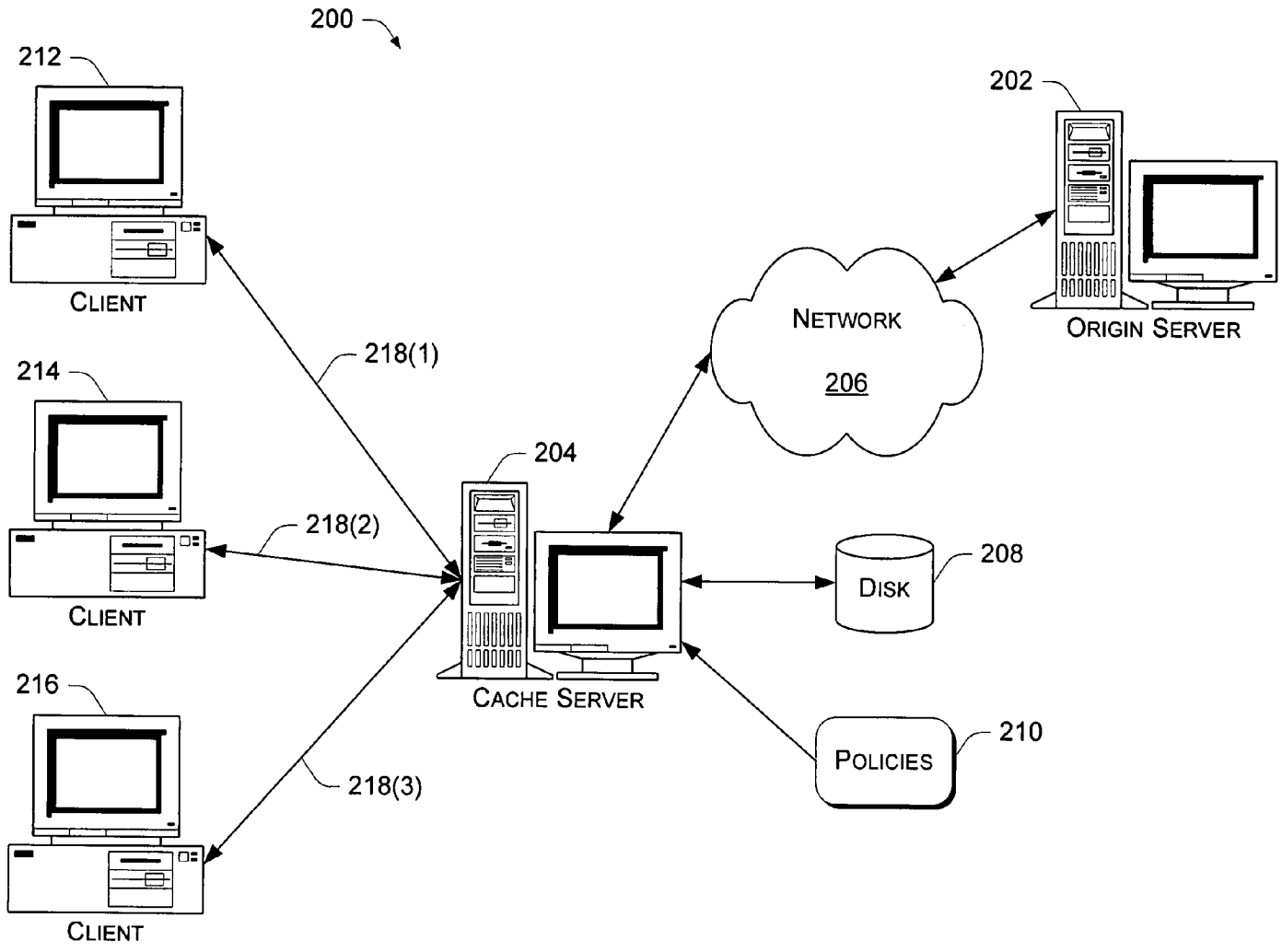
200
212
CLIENT
214
CLIENT
216
CLIENT
218(1)
218(2)
218(3)
204
CACHE SERVER
NETWORK
206
202
ORIGIN SERVER
DISK
208
POLICIES
210

Fig. 2

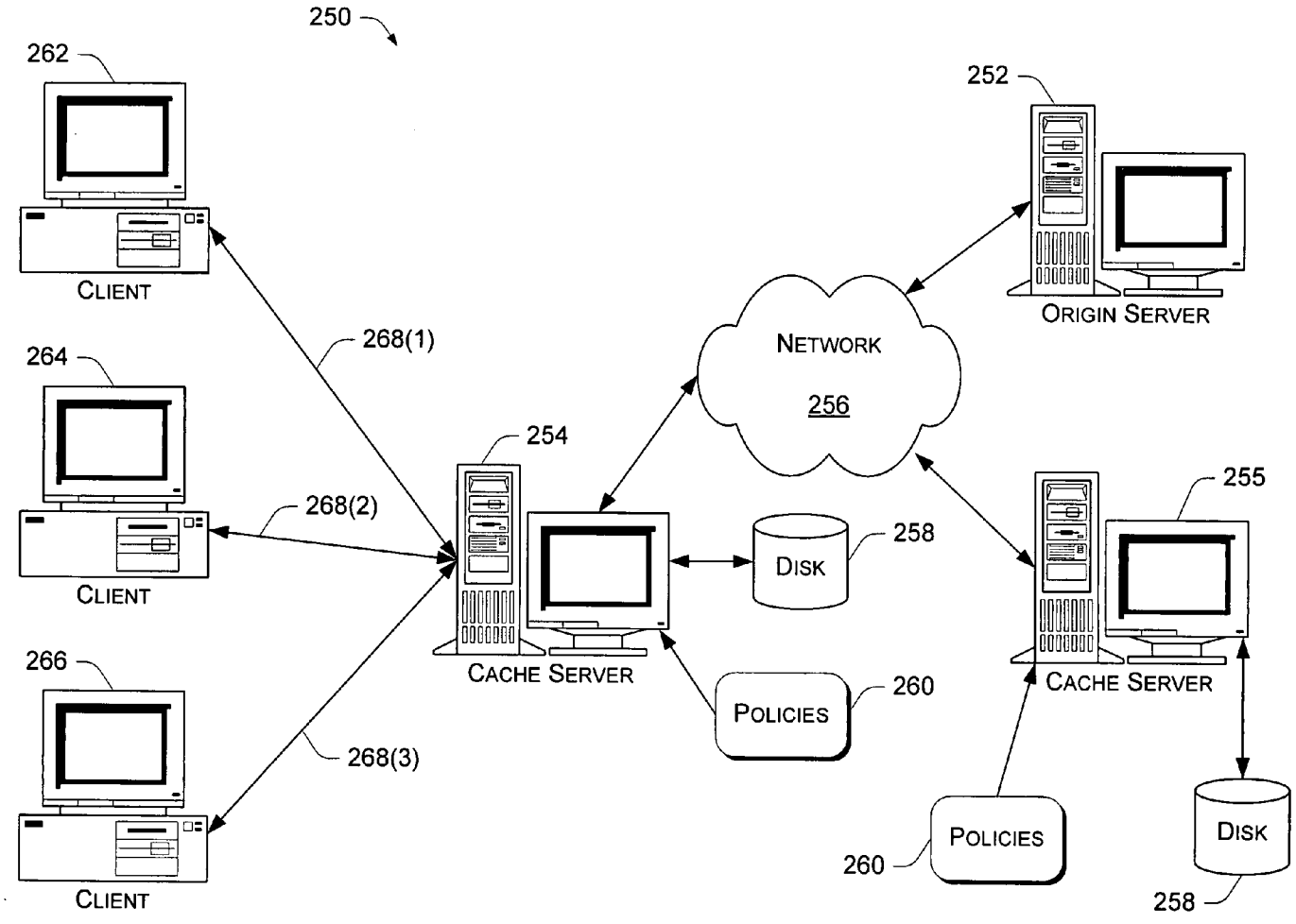
250
262
CLIENT
264
CLIENT
266
CLIENT
268(1)
268(2)
268(3)
254
CACHE SERVER
NETWORK
256
DISK
258
POLICIES
260
252
ORIGIN SERVER
255
CACHE SERVER
POLICIES
260
DISK
258

Fig. 3

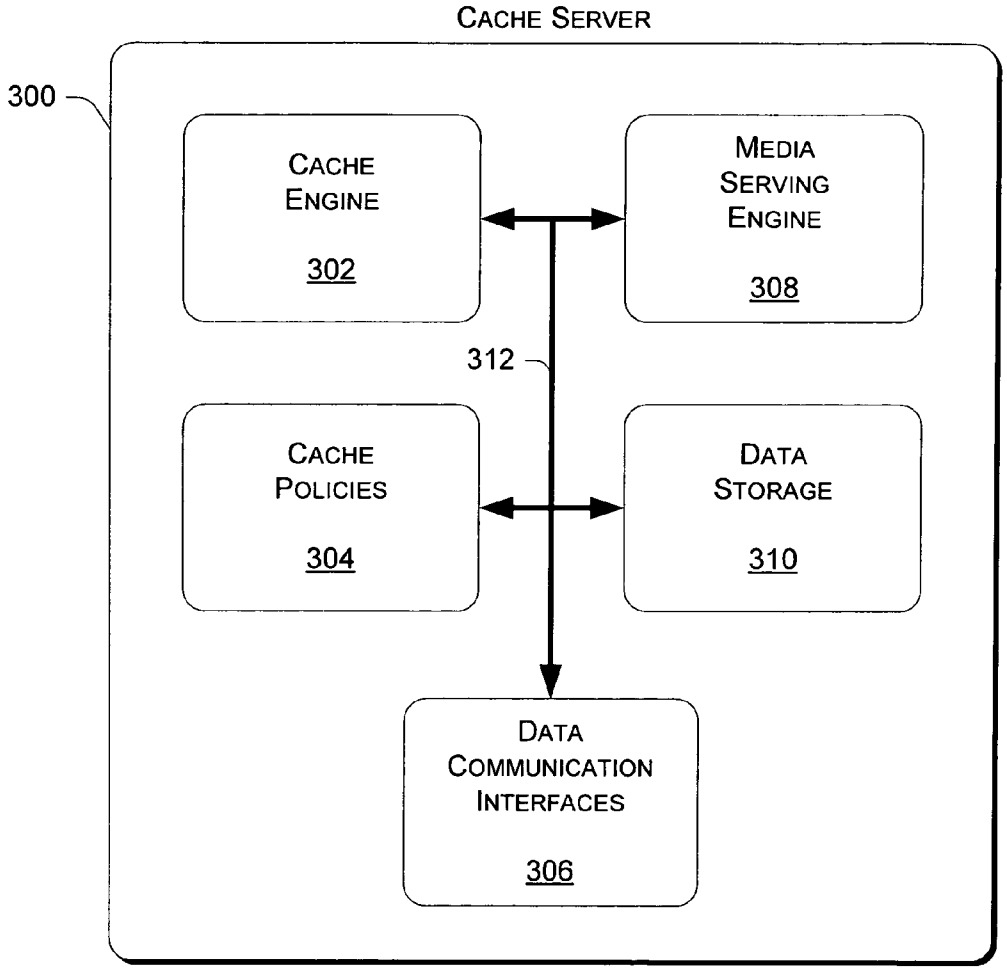
CACHE SERVER
300
CACHE ENGINE
302
MEDIA SERVING ENGINE
308
312
CACHE POLICIES
304
DATA STORAGE
310
DATA COMMUNICATION INTERFACES
306

Fig. 4

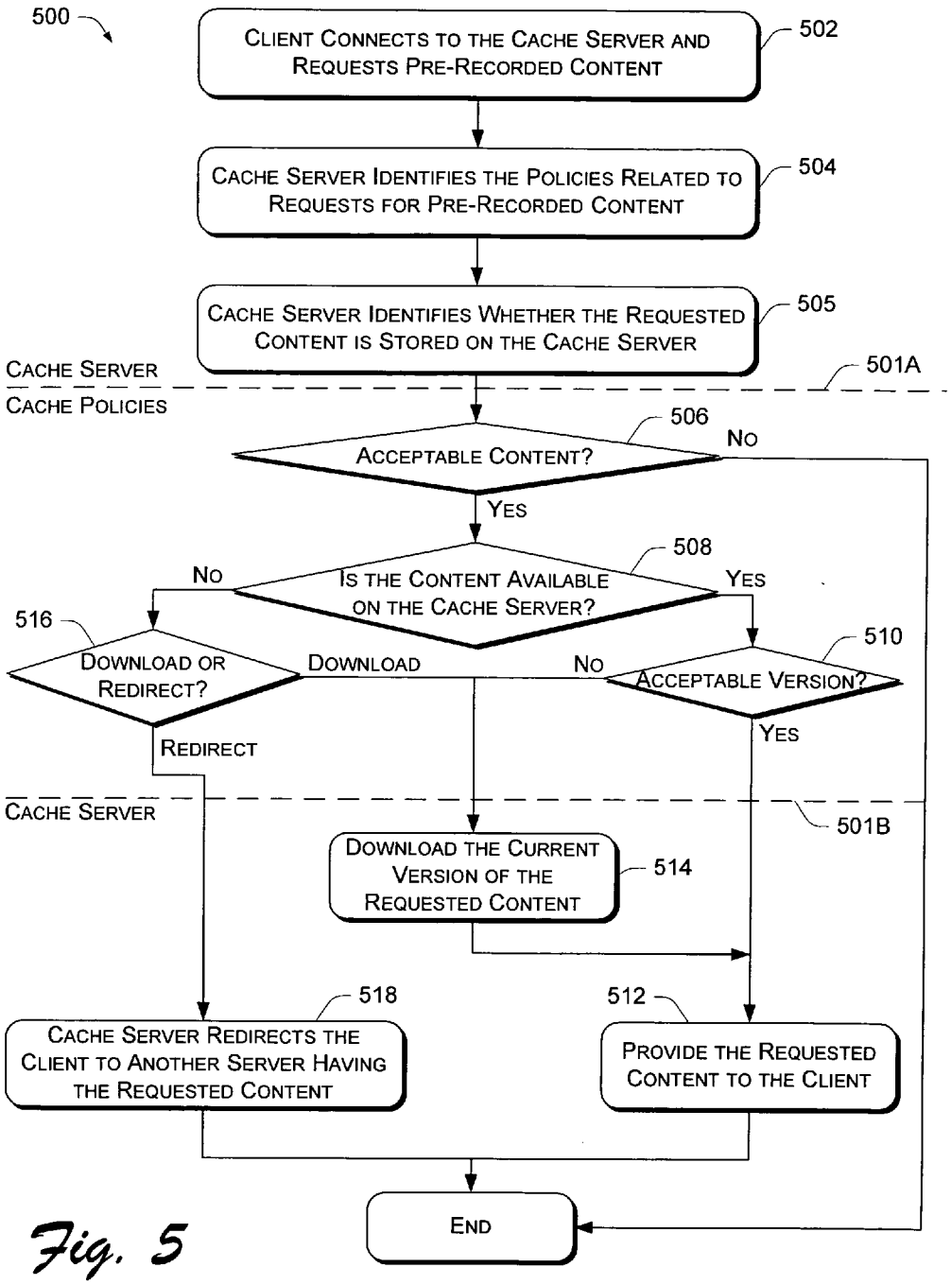
500
Client Connects to the Cache Server and Requests Pre-Recorded Content
502
Cache Server Identifies the Policies Related to Requests for Pre-Recorded Content
504
Cache Server Identifies Whether the Requested Content is Stored on the Cache Server
505
Cache Server
Cache Policies
501A
Acceptable Content?
506
No
Yes
Is the Content Available on the Cache Server?
508
No
Yes
Download or Redirect?
516
Download
No
Acceptable Version?
510
Yes
Redirect
Cache Server
501B
Download the Current Version of the Requested Content
514
Cache Server Redirects the Client to Another Server Having the Requested Content
518
Provide the Requested Content to the Client
512
End

Fig. 5

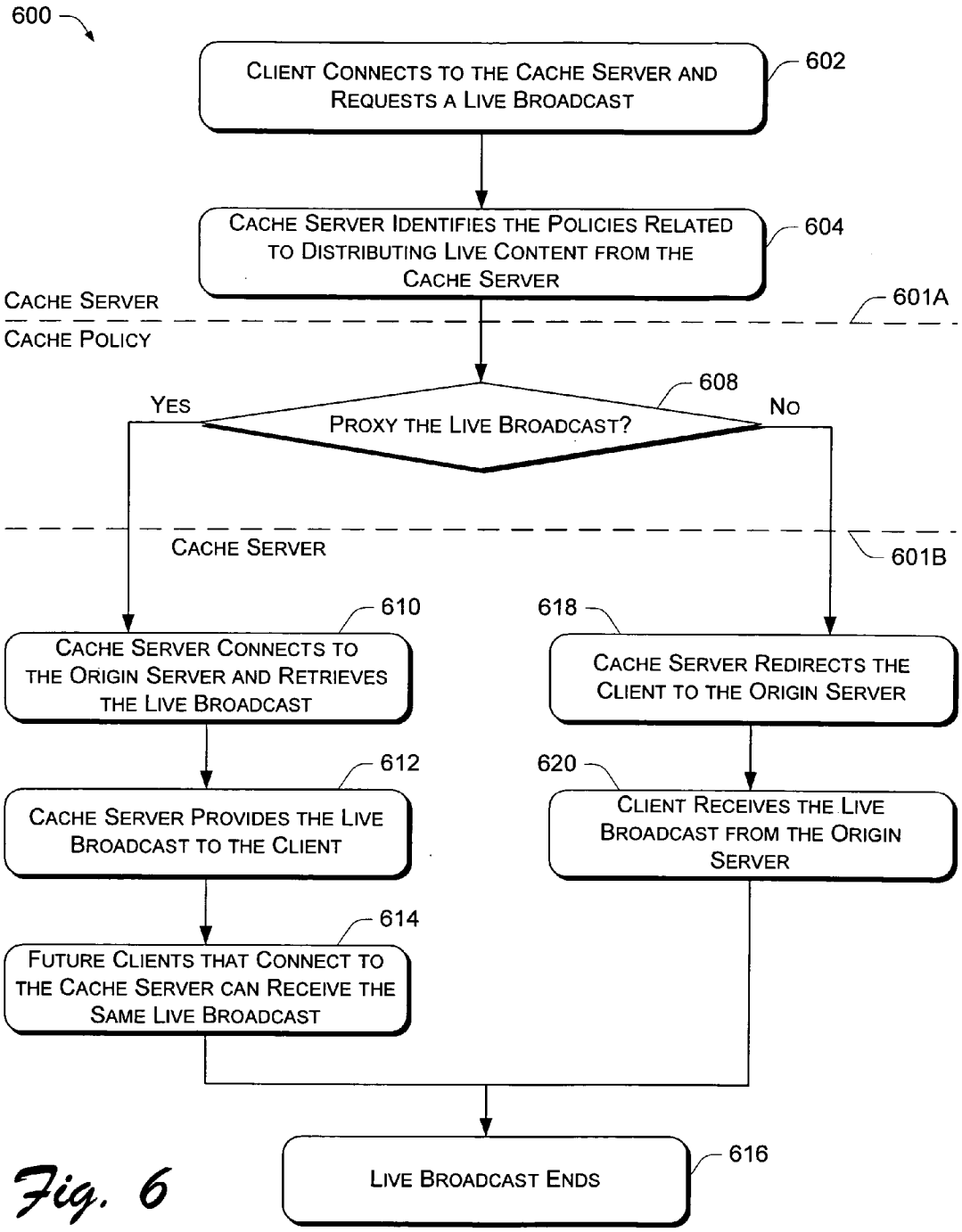
600
Client Connects to the Cache Server and Requests a Live Broadcast
602
Cache Server Identifies the Policies Related to Distributing Live Content from the Cache Server
604
Cache Server
Cache Policy
601A
Yes
Proxy the Live Broadcast?
608
No
Cache Server
601B
610
Cache Server Connects to the Origin Server and Retrieves the Live Broadcast
618
Cache Server Redirects the Client to the Origin Server
612
Cache Server Provides the Live Broadcast to the Client
620
Client Receives the Live Broadcast from the Origin Server
614
Future Clients that Connect to the Cache Server can Receive the Same Live Broadcast
Live Broadcast Ends
616

Fig. 6

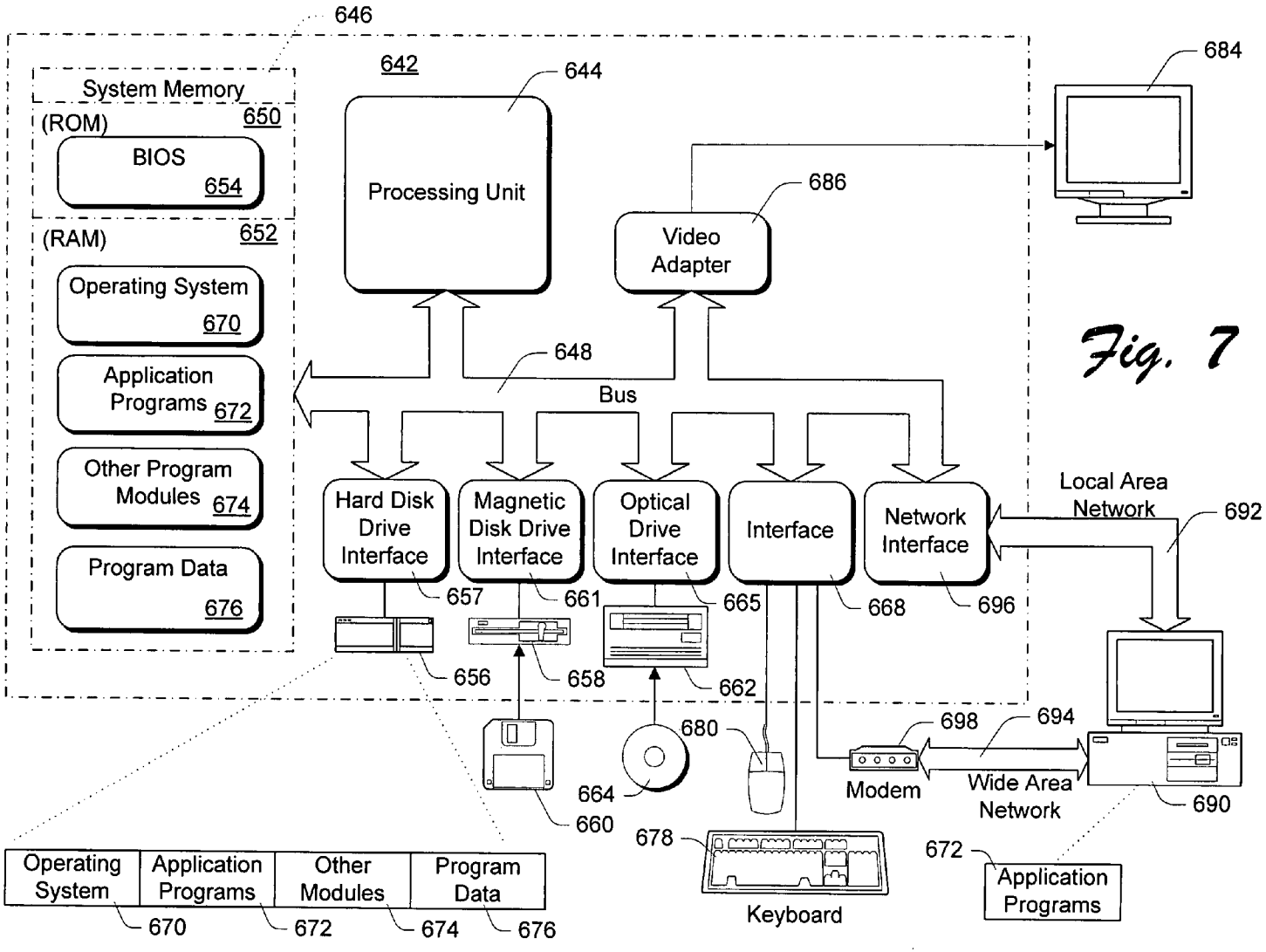
646
System Memory
(ROM)
650
BIOS
654
(RAM)
652
Operating System
670
Application Programs
672
Other Program Modules
674
Program Data
676
642
644
Processing Unit
686
Video Adapter
684
648
Bus
Hard Disk Drive Interface
Magnetic Disk Drive Interface
Optical Drive Interface
Interface
Network Interface
657
661
665
668
696
656
658
662
660
664
680
678
Keyboard
698
694
Modem
Wide Area Network
Local Area Network
692
690
672
Application Programs
Operating System
Application Programs
Other Modules
Program Data
670
672
674
676

Fig. 7

METHOD AND APPARATUS FOR SELECTING CACHE AND PROXY POLICY

RELATED APPLICATIONS

[0001] This application is a Continuation of co-pending application Ser. No. 09/893,373, filed Jun. 26, 2001, entitled "Method and Apparatus for Selecting Cache and Proxy Policy", and incorporated herein by reference.

TECHNICAL FIELD

[0002] The present invention relates to media systems and, more particularly, to the handling of cache and proxy policies in a cache server.

BACKGROUND

[0003] Media distribution systems distribute media content, such as audio data or video data, from an origin server to one or more clients via a data communication network. The data communication network may include, for example, a local area network (LAN) or a wide area network (WAN). The origin server is the source of the media content, including both live media content and pre-recorded media content. A particular type of media distribution system, referred to as a streaming media system, distributes real-time data from an origin server to one or more clients requesting the real-time data. Increased bandwidth through the data communication network improves the audio or video quality of the distributed media in the case of real-time data. If one or more low bandwidth communication links exist in the network connecting the origin server to the client, then the quality of the real-time media presentation is reduced. In this situation, the client may attempt to retrieve the media from a different server, referred to as a cache server or a proxy server, which is connected to the client using higher bandwidth communication links. The cache or proxy server retrieves the content from the origin server and distributes the content to one or more clients via a faster communication link.

[0004] **FIG. 1** illustrates an environment **100** in which a client can request and receive content (such as streaming video content) from a cache server and/or an origin server. A client **102** is coupled to a network **104**, such as the Internet, via a communication link **114**. A cache server **106** is coupled to client **102** via a communication link **112** and coupled to network **104** via a communication link **118**. Cache server **106** includes a storage disk **108** for storing data, such as cached media content for distribution to client **102**. An origin server **110** is coupled to network **104** via a communication link **116**.

[0005] Typically, the communication links to network **104** (i.e., communication links **114**, **116**, and **118**) are relatively slow connections (e.g., 64 k bits per second) and provide low quality real-time video images. In contrast, communication link **112** between client **102** and cache server **106** is generally a faster connection (e.g., 100M bits per second) provided by a LAN or other high-speed network.

[0006] When client **102** wants to receive media content, a request is issued to cache server **106**. If the cache server **106** has cached a copy of the requested media content, then the cache server transmits the content across communication link **112** to client **102**.

[0007] Cache server **106** receives its stored media content from one or more origin servers **110**. Typically, cache server **106** downloads content from origin server **110** at a relatively low speed. However, once the content is downloaded, the cache server **106** can distribute the content to many local clients via a high-speed network connection, such as communication link **112**. The cache server **106** may save the downloaded content to serve future client requests for the content without having to download the content from the origin server **110**. If cache server **106** does not contain the content requested by the client **102**, then the client must retrieve the desired content from the origin server **110**.

[0008] Existing cache servers are manufactured with a substantially fixed architecture that is difficult to customize. A particular manufacturer may provide several different cache server models with different features, but the architecture of each model provides minimal opportunity for customization. A cache server customer is forced to select a cache server model that is "closest" to their cache requirements. Since different cache users are likely to have different cache requirements, no single cache server can satisfy the needs of all users. Depending on the cache server features and the customer's requirements, the cache server may not be capable of meeting all of the customer's cache requirements. These existing cache servers perform various cache-related functions that are controlled by a set of cache policies that are determined by the manufacturer. These existing cache servers that define both the cache-related functions and the policies for implementing those functions minimize the opportunities for a customer to modify the cache server to meet their specific needs.

[0009] The system described herein addresses these limitations by providing a single cache server that can operate as either an origin server or a cache server. The system includes a flexible architecture that separates the various cache functions from the policies that determine which functions are to be performed in a particular situation. This flexible architecture allows a common cache server to be configured in a variety of different ways depending on the set of policies applied to the cache server. Thus, different manufacturers or end users can create different cache server functionality based on the set of policies selected.

SUMMARY

[0010] The system and methods described herein provide a cache server that is capable of performing various cache-related functions under the direction of a set of user-configurable cache policies. This cache server architecture allows the same cache server to operate in different ways depending on the specific set of cache policies.

[0011] In one embodiment, a media serving engine is provided to distribute media content. A cache engine, which is coupled to the media serving engine, caches media content. A set of cache policies is accessible by the cache engine to define the operation of the cache engine.

[0012] In a described embodiment, the apparatus can be configured to operate as a cache server.

[0013] A particular embodiment also includes a data communication interface coupled to the cache engine and the media serving engine. The data communication interface allows the cache engine to retrieve media content across a network and allows the media serving engine to distribute media content across a network.

[0014] In another embodiment, the cache policies include policies for distributing media content, handling cache misses, and prefetching media content.

[0015] In one embodiment, a request for media content is received by a media server from a client. A determination is made as to whether the cache server is functioning as a cache server or an origin server. The request for media content is processed according to a set of cache policies if operating as a cache server. The requested media content is provided to the client if the cache server is operating as an origin server and contains the requested media content.

BRIEF DESCRIPTION OF THE DRAWINGS

[0016] **FIG. 1** illustrates an environment in which a client can request and receive content from a cache server and/or an origin server.

[0017] **FIG. 2** illustrates an example environment in which multiple clients can request and receive content from a cache server and/or an origin server.

[0018] **FIG. 3** illustrates another example environment in which data is cached in multiple cache servers.

[0019] **FIG. 4** is a block diagram showing exemplary components in a cache server.

[0020] **FIG. 5** is a flow diagram illustrating a procedure for handling a client request to receive pre-recorded content.

[0021] **FIG. 6** is a flow diagram illustrating a procedure for handling a client request to receive a live broadcast.

[0022] **FIG. 7** illustrates an example of a suitable operating environment in which the invention may be implemented.

DETAILED DESCRIPTION

[0023] The system and methods described herein provide a cache server that performs a variety of cache-related functions. The operation of the cache server is determined by a set of cache policies that are determined by the user of the cache server. Thus, the same cache server is capable of meeting the cache requirements of a variety of users because each user or manufacturer can configure the cache policies to meet their specific needs.

[0024] **FIG. 2** illustrates an example environment **200** in which multiple clients **212**, **214**, and **216** can request and receive content from a cache server **204** In this example, each client **212-216** is coupled to cache server **204** via a high-speed LAN connection **218**. Cache server **204** is coupled to an origin server **202** via a network **206**, such as the Internet. Cache server **204** is also coupled to a disk storage device **208**, which stores various data, including cached media content (such as media content received from origin server **202**). Cache server **204** receives a set of cache policies **210** (also referred to as "policy plug-ins"), which define what functions the cache server performs in certain situations.

[0025] Origin server **202** stores various pre-recorded media content, such as movies, television programs, concerts, sporting events, and the like. This pre-recorded media content may be distributed to one or more cache servers (such as cache server **204**) for redistribution to one or more clients **212-216**. Although the distribution of the media content to cache server **204** is via a slow communication link, the cache server **204** is able to redistribute the media content to multiple local clients at a significantly faster rate, thereby providing a higher quality real-time video image to the local clients.

[0026] Origin server **202** may also receive live broadcast streams, such as news events, press conferences, live sporting events, and the like. These live broadcast streams can be distributed to cache server **204** via network **206**. Cache server **204** may then redistribute the broadcast streams to one or more clients that have requested the broadcast stream. Thus, a single transmission of the broadcast stream to cache server **204** can satisfy the requests of multiple clients coupled to the cache server, thereby reducing the burden on the origin server **202** and reducing the traffic across network **206**.

[0027] In the example of **FIG. 2**, origin server **202** may be a dedicated origin server or may be a cache server (similar to cache server **204**) that is capable of functioning as either an origin server or as a cache server. If origin server **202** is a cache server, then it is configured in **FIG. 2** as an origin server.

[0028] **FIG. 2** illustrates a single origin server **202**, a single cache server **204**, and three clients **212-216**. However, it will be appreciated that alternate embodiments may include any number of origin servers, any number of cache servers, and any number of clients, all coupled to one another via one or more data communication networks.

[0029] **FIG. 3** illustrates another example environment **250** in which data is cached in multiple cache servers **254** and **255**. Each cache server **254** and **255** is accessible to different groups of clients. For example, cache server **254** is accessible to clients **262**, **264**, and **266** via a communication link **268**. Although no clients are shown coupled to cache server **255**, the cache server may be accessible to any number of clients. Each cache server **254** and **255** is coupled to network **256**. An origin server **252** is also coupled to network **256**, which allows content to be downloaded from the origin server across the network to the cache servers **254** and **255**. Each cache server **254** and **255** is coupled to a disk storage device **258** and a set of cache policies **260**.

[0030] In this example, the two sets of cache policies **260** are identical such that the operation of the two cache servers **254** and **255** are the same. Each cache server **254** and **255** stores the same cached content from origin server **252** such that a client could be coupled to either cache server and have access to the same cached content. This configuration assists with the sharing of the content distribution burden on both cache servers **254** and **255**. If one cache server is reaching its capacity to distribute content, one or more clients may be redirected to the other cache server to balance the content distribution workload between the two cache servers.

[0031] In an alternate embodiment, the cache servers **254** and **255** do not cache the same content. For example, cache server **254** may cache movie content while cache server **255** caches sports and special event content. Although the two cache servers **254** and **255** may provide the same functions, the cache servers may operate in different manners (e.g., caching different types of content) based on differences in the cache policies applied to the cache servers.

[0032] **FIG. 4** is a block diagram showing exemplary components in a cache server **300**. Cache server **300**

includes a cache engine **302** which performs the various functions necessary to cache media content. Example caching functions include downloading media content from an origin server, distributing media content to one or more clients, redirecting clients to a different server for particular media content, and deleting cached media content to release storage space for caching different media content. A set of cache policies **304** are accessed and utilized by the cache engine **302** in performing its various caching functions. For example, cache policies **304** may define when the cache engine should delete cached media content and when the cache engine should download and cache particular media content for expected future access by one or more clients.

[**0033**] In one embodiment, the cache server is a Windows Media Server and the set of cache policies are contained in one or more cache plug-in modules that are loaded in the Windows Media Server and called by the Windows Media Server. Any number of cache plug-in modules can be loaded into the Windows Media Server. The combination of all loaded cache plug-in modules defines the set of cache policies. In one embodiment, the cache plug-in modules are COM objects, which allows the cache plug-in modules to run in the same space as the Windows Media Server. Alternatively, the cache plug-in modules can run as part of another process on the same computer system or on a different computer system that supports the Windows Media Server. Additional cache plug-in modules can be installed by the system administrator at any time and existing cache plug-in modules can be removed by the system administrator at any time, thereby providing flexible management of the cache policies. Thus, the operation of a cache server can be modified simply by changing the cache plug-in modules in the cache server. Additional details regarding the cache policies are provided below.

[**0034**] Cache server **300** includes various data communication interfaces **306**, which allow the cache server to interact with other devices, such as clients, origin servers, and other cache servers. Cache server **300** may use any type of data communication interfaces necessary to communicate with other devices. A media serving engine **308** distributes media content to one or more clients or other servers.

[**0035**] Cache server **300** also includes a data storage device **310** for storing data and other information used by the various components of the cache server. Data storage device **310** works in combination with the disk storage device **208** shown in **FIG. 2**. The various components shown in cache server **300** may be coupled to one another via one or more data communication busses or other communication links, such as bus **312**.

[**0036**] By providing a single cache server **300** that can be configured to operate differently using different cache plug-in modules, system administrators or operators only need to understand how to define cache policies in the cache plug-in modules. Administrators need not understand the internal functioning of the cache server. Cache server **300** combines the necessary components to perform a wide variety of functions that are controlled by the cache policies. Thus, different users or manufacturers can build different cache products using the same cache server **300** platform. The cache engine **302** is a general purpose cache engine capable of performing many different cache functions. The system administrator or operator controls those functions with various cache policies **304**, which control the operation of the cache engine **302**. Thus, the cache server **300** can be "customized" by each system administrator by defining their own set of cache policies **304**.

[**0037**] As discussed above, the cache server described herein is capable of performing a set of functions. When and how particular functions are performed is determined by the cache policies. The various functions that a cache server is capable if performing include, for example, downloading content, distributing content, caching content and deleting cached content. The cache policies may determine, for example, how to handle a cache miss, how often to check the "freshness" of cached content, what types of content to cache and when to prefetch content. This flexible cache server architecture allows an administrator to configure a particular cache server to operate in a variety of manners depending on the cache policies associated with the cache server.

[**0038**] As mentioned above, the cache server **300** can operate as an origin server and/or a cache server (i.e., caching content on behalf of other servers). If cache server **300** receives a request for content stored in the cache server, the cache server operates as an origin server by providing the requested content. In this situation, the cache server **300** ignores cache policies because the cache server is operating as an origin server. If cache server **300** receives a request for content stored on a different server, the cache server operates as a cache server by caching content from one or more different servers. In this situation, the cache server **300** applies the various cache policies to process the cached data in the appropriate manner (i.e., the manner defined by the cache policies).

[**0039**] **FIG. 5** is a flow diagram illustrating a procedure **500** for handling a client request to receive pre-recorded content. The procedure **500** illustrates the functions performed by the cache server as well as the decisions made by the cache policies. A pair of broken lines **501**A and **501**B identify the sections of procedure **500** that represent functions performed by the cache server (the sections above line **501**A and below line **501**B) and the sections of procedure **500** that represent decisions made by the cache policies (the section between lines **501**A and **501**B). A client establishes a connection to the cache server and requests pre-recorded content from the cache server (block **502**). The cache server identifies the policies related to requests for pre-recorded content (block **504**). The cache server then identifies whether the requested content is stored on the cache server (block **505**). For example, the cache server may examine a URL associated with the requested content to determine whether the content is available on the cache server or whether the requested content is stored on a different server.

[**0040**] At block **506**, the cache policies determine whether the requested content is acceptable (i.e., not blocked due to adult content or other restricted content). If the requested content requires a verification, the procedure requests a name and password from the user for authentication. If the content is blocked or the client does not provide the proper name and password, the policy terminates the procedure without providing any content to the client.

[**0041**] If the content is acceptable at block **506** (or the proper name and password are provided by the client), then the cache policies determine whether the requested content

is available on the cache server (block **508**). If the requested content is available, then the cache policies determine whether the cached version of the requested content is an acceptable version (block **510**). An acceptable version is determined based on the cache policies (e.g., whether the cached version is the same as the origin server's version or is within thirty minutes of the origin server's version). If the cached version is acceptable, the procedure continues to block **512**, where the cache server provides the cached version of the requested content to the client. If the cached version of the requested content is not acceptable, then the procedure branches from block **510** to block **514**, where the cache server downloads the current version of the requested content from the origin server. In this situation, the client may experience a slight delay in receiving the requested content as the current version is downloaded. However, the client does not necessarily need to wait until the entire current version is downloaded. Instead, the cache server may begin sending the current version of the content as it is received by the cache server (although the image quality may be reduced due to the typically slow communication links between the cache server and the origin server). As the current version is downloaded (or after it has finished downloading), the cache server provides the current version to the client (block **512**).

[**0042**] If block **508** determines that the requested content is not available on the cache server, then the cache policies determine whether to download the requested content or redirect the client to a different server (block **516**). If the cache policies dictate that the requested content be downloaded, then the procedure branches to block **514**, where the cache server downloads the current version of the requested content from the origin server. If the cache policies dictate that the client be redirected to a different server, then the procedure branches to block **518**, where the cache server redirects the client to another server having the requested content. The server to which the client is redirected may be another cache server or an origin server. After redirecting the client to another server to retrieve the requested content, the cache server may (depending on the cache server's cache policies) download the previously requested content so that the cache server has a cached version of the content for future client requests.

[**0043**] **FIG. 6** is a flow diagram illustrating a procedure **600** for handling a client request to receive a live broadcast. The procedure **600** illustrates the functions performed by the cache server as well as the decisions made by the cache policies. A pair of broken lines **601** A and **601** B identify the sections of procedure **600** that are represent functions performed by the cache server (the sections above line **601**A and below line **601**B) and the sections of procedure **600** that represent decisions made by the cache policies (the section between lines **601**A and **601**B).

[**0044**] A client establishes a connection to the cache server and requests a live broadcast from the cache server (block **602**). The cache server identifies the policies related to requests for live content (block **604**).

[**0045**] The cache policies then determine whether the cache server should proxy the requested live broadcast (block **608**). The cache policy may determine not to proxy the requested live broadcast because the bandwidth quotas for the required communication link have been reached.

[**0046**] If the cache policies determine that the cache server will proxy the live broadcast, then the procedure continues to block **610**, where the cache server connects to the origin server and establishes a connection to receive the live broadcast. Next, the cache server provides the live broadcast to the client (block **612**). Any future clients that connect to the cache server can receive the same live broadcast (block **614**) until the live broadcast ends (block **616**). In a particular embodiment, the cache server stores (i.e., caches) a copy of the live broadcast for viewing by one or more clients after the live broadcast has ended.

[**0047**] If the cache server will not proxy the live broadcast, then the procedure branches from block **608** to block **618**, where the cache server redirects the client to the origin server. The client then receives the live broadcast from the origin server (block **620**) until the live broadcast ends (block **616**).

[**0048**] The cache policies are typically defined based on an administrator's knowledge of the origin servers, cache servers, clients, networks and other components in the environment in which the cache server is located. Alternatively, the cache policies may have been set by a manufacturer that customizes the cache server and sells the cache server to an end user.

[**0049**] The cache policies may also be based on the administrator's knowledge and/or expectations with respect to, for example, the type of content requests received by the cache server, the volume of requests and the timing of the requests.

[**0050**] Other decisions the cache policies may make include the types of content that should be cached on the cache server. For example, the cache policy may dictate that the cache server can only cache content from specific origin servers (e.g., origin servers owned by a particular company or organization). Additionally, the cache policy may state that the cache server can only cache small pieces of content (that are inexpensive to copy) or only large pieces of content. The cache policy may also limit the total amount of cached content that the cache server can store at any particular time.

[**0051**] Other cache policies determine the frequency with which the cache server checks the freshness of the content stored on the cache server. These policies may also determine whether the cache server is required to have the latest version of the content or whether a "stale" version of the content is sufficient in particular situations.

[**0052**] Another group of cache policies handle cache misses (i.e., the cache server does not contain the requested content). When a cache miss occurs, the cache policy determines how to deliver the requested content to the client. The policy may cause the client to wait while the cache server downloads a copy of the requested content, the client may be redirected to a different cache server, or the client may be redirected to the origin server to retrieve the requested content. When a cache miss occurs, the cache policies will determine whether a copy of the requested content should be cached by the cache server to satisfy future requests for the same content by other clients. If the cache policy determines that the content should be cached by the cache server, then another cache policy may determine whether any of the existing cached content should be deleted to release storage space for the new content. If

existing cached content is to be deleted, the cache policy will determine which content should be deleted (e.g., the oldest cached content or the least frequently requested content).

[0053] Another set of cache policies determine when to prefetch content. Prefetching content refers to the process of downloading content from an origin server even though a request for the content has not yet been received from a client. For example, a cache server may download a new movie release or the latest news programs from 3:00 a.m. to 6:00 a.m. in anticipation of client requests for the content later in the day. The prefetching policies determine, for example, the content to download from the origin server and the time period during which the content should be downloaded. If necessary, the cache policies determine which content to delete to make room for the prefetched content.

[0054] **FIG. 7** illustrates an example of a suitable operating environment in which the invention may be implemented. The illustrated operating environment is only one example of a suitable operating environment and is not intended to suggest any limitation as to the scope of use or functionality of the invention. Other well known computing systems, environments, and/or configurations that may be suitable for use with the invention include, but are not limited to, personal computers, server computers, hand-held or laptop devices, multiprocessor systems, microprocessor-based systems, programmable consumer electronics, gaming consoles, cellular telephones, network PCs, minicomputers, mainframe computers, distributed computing environments that include any of the above systems or devices, and the like.

[0055] **FIG. 7** shows a general example of a computer **642** that can be used in accordance with the invention. Computer **642** is shown as an example of a computer that can perform the functions of client computer **212-216**, cache server **204**, or origin server **202** of **FIG. 2**. Computer **642** includes one or more processors or processing units **644**, a system memory **646**, and a bus **648** that couples various system components including the system memory **646** to processors **644**.

[0056] The bus **648** represents one or more of any of several types of bus structures, including a memory bus or memory controller, a peripheral bus, an accelerated graphics port, and a processor or local bus using any of a variety of bus architectures. The system memory **646** includes read only memory (ROM) **650** and random access memory (RAM) **652**. A basic input/output system (BIOS) **654**, containing the basic routines that help to transfer information between elements within computer **642**, such as during start-up, is stored in ROM **650**. Computer **642** further includes a hard disk drive **656** for reading from and writing to a hard disk, not shown, connected to bus **648** via a hard disk drive interface **657** (e.g., a SCSI, ATA, or other type of interface); a magnetic disk drive **658** for reading from and writing to a removable magnetic disk **660**, connected to bus **648** via a magnetic disk drive interface **661**; and an optical disk drive **662** for reading from and/or writing to a removable optical disk **664** such as a CD ROM, DVD, or other optical media, connected to bus **648** via an optical drive interface **665**. The drives and their associated computer-readable media provide nonvolatile storage of computer readable instructions, data structures, program modules and other data for computer **642**. Although the exemplary environment described herein employs a hard disk, a removable magnetic disk **660** and a removable optical disk **664**, it will be appreciated by those skilled in the art that other types of computer readable media which can store data that is accessible by a computer, such as magnetic cassettes, flash memory cards, random access memories (RAMs), read only memories (ROM), and the like, may also be used in the exemplary operating environment.

[0057] A number of program modules may be stored on the hard disk, magnetic disk **660**, optical disk **664**, ROM **650**, or RAM **652**, including an operating system **670**, one or more application programs **672**, other program modules **674**, and program data **676**. A user may enter commands and information into computer **642** through input devices such as keyboard **678** and pointing device **680**. Other input devices (not shown) may include a microphone, joystick, game pad, satellite dish, scanner, or the like. These and other input devices are connected to the processing unit **644** through an interface **668** that is coupled to the system bus (e.g., a serial port interface, a parallel port interface, a universal serial bus (USB) interface, etc.). A monitor **684** or other type of display device is also connected to the system bus **648** via an interface, such as a video adapter **686**. In addition to the monitor, personal computers typically include other peripheral output devices (not shown) such as speakers and printers.

[0058] Computer **642** operates in a networked environment using logical connections to one or more remote computers, such as a remote computer **688**. The remote computer **688** may be another personal computer, a server, a router, a network PC, a peer device or other common network node, and typically includes many or all of the elements described above relative to computer **642**, although only a memory storage device **690** has been illustrated in **FIG. 7**. The logical connections depicted in **FIG. 7** include a local area network (LAN) **692** and a wide area network (WAN) **694**. Such networking environments are commonplace in offices, enterprise-wide computer networks, intranets, and the Internet. In certain embodiments of the invention, computer **642** executes an Internet Web browser program (which may optionally be integrated into the operating system **670**) such as the "Internet Explorer" Web browser manufactured and distributed by Microsoft Corporation of Redmond, Wash.

[0059] When used in a LAN networking environment, computer **642** is connected to the local network **692** through a network interface or adapter **696**. When used in a WAN networking environment, computer **642** typically includes a modem **698** or other means for establishing communications over the wide area network **694**, such as the Internet. The modem **698**, which may be internal or external, is connected to the system bus **648** via a serial port interface **668**. In a networked environment, program modules depicted relative to the personal computer **642**, or portions thereof, may be stored in the remote memory storage device. It will be appreciated that the network connections shown are exemplary and other means of establishing a communications link between the computers may be used.

[0060] Computer **642** typically includes at least some form of computer readable media. Computer readable media can be any available media that can be accessed by computer **642**. By way of example, and not limitation, computer

readable media may comprise computer storage media and communication media. Computer storage media includes volatile and nonvolatile, removable and non-removable media implemented in any method or technology for storage of information such as computer readable instructions, data structures, program modules or other data. Computer storage media includes, but is not limited to, RAM, ROM, EEPROM, flash memory or other memory technology, CD-ROM, digital versatile disks (DVD) or other optical storage, magnetic cassettes, magnetic tape, magnetic disk storage or other magnetic storage devices, or any other media which can be used to store the desired information and which can be accessed by computer **642**. Communication media typically embodies computer readable instructions, data structures, program modules or other data in a modulated data signal such as a carrier wave or other transport mechanism and includes any information delivery media. The term "modulated data signal" means a signal that has one or more of its characteristics set or changed in such a manner as to encode information in the signal. By way of example, and not limitation, communication media includes wired media such as wired network or direct-wired connection, and wireless media such as acoustic, RF, infrared and other wireless media. Combinations of any of the above should also be included within the scope of computer readable media.

[0061] The invention has been described in part in the general context of computer-executable instructions, such as program modules, executed by one or more computers or other devices. Generally, program modules include routines, programs, objects, components, data structures, etc. that perform particular tasks or implement particular abstract data types. Typically the functionality of the program modules may be combined or distributed as desired in various embodiments.

[0062] For purposes of illustration, programs and other executable program components such as the operating system are illustrated herein as discrete blocks, although it is recognized that such programs and components reside at various times in different storage components of the computer, and are executed by the data processor(s) of the computer.

[0063] Thus, a system and method has been described that provide a flexible cache server architecture that is capable of functioning in different manners depending on the set of cache policies that are applied to the cache server.

[0064] Although the description above uses language that is specific to structural features and/or methodological acts, it is to be understood that the invention defined in the appended claims is not limited to the specific features or acts described. Rather, the specific features and acts are disclosed as exemplary forms of implementing the invention.

1. A server comprising:

a storage device to store a plurality of server policies, wherein each server policy defines operating characteristics of the server, and wherein one of the plurality of server policies is a currently active server policy; and

a processor coupled to the storage device, wherein the processor controls operation of the server based on the currently active server policy.

2. A server as recited in claim 1 wherein one of the plurality of server policies causes the server to operate as a cache server and another of the plurality of server policies causes the server to operate as an origin server.

3. A server as recited in claim 1 further comprising a data communication interface coupled to the storage device and the processor, wherein instructions to change the currently active server policy are received via the data communication interface.

4. A server as recited in claim 1 wherein each of the plurality of server policies defines a manner in which the server handles media content received from at least one media content source.

5. A server as recited in claim 1 wherein each of the plurality of server policies defines a manner in which the server distributes media content to a plurality of clients.

6. A server as recited in claim 1 further comprising a media serving engine coupled to the storage device and the processor, wherein the media serving engine provides media content to at least one client device coupled to the server.

7. A server as recited in claim 1 wherein the server policies include policies for caching media content.

8. An apparatus comprising:

a storage device to store a first cache policy and a second cache policy, wherein the first cache policy causes the apparatus to operate as a cache server and the second cache policy causes the apparatus to operate as an origin server, and wherein the first cache policy or the second cache policy is a currently active cache policy;

a media serving engine to distribute media content; and

a cache engine coupled to the media serving engine and the storage device, the cache engine to process media based on the currently active cache policy.

9. An apparatus as recited in claim 8 wherein the cache engine is configured to cache media content from a plurality of media content sources based on the currently active cache policy.

10. An apparatus as recited in claim 8 further comprising a data communication interface coupled to the cache engine and the media serving engine, wherein instructions to change the currently active cache policy are received via the data communication interface.

11. An apparatus as recited in claim 8 further comprising a data communication interface coupled to allow the cache engine to retrieve media content via a network.

12. An apparatus as recited in claim 8 further including a data communication interface coupled to allow the media serving engine to distribute media content across a network.

13. An apparatus as recited in claim 8 wherein each of the cache policies defines a manner in which media content is distributed to a plurality of clients.

14. An apparatus as recited in claim 8 wherein the first and second cache policies include policies for handling cache misses.

15. An apparatus as recited in claim 8 wherein the first and second cache policies include policies for prefetching media content.

16. A method comprising:

configuring a server based on a currently active server policy, wherein the currently active server policy defines operating characteristics of the server;

operating the server according to the operating characteristics of the currently active server policy;

receiving a new server policy, wherein the new server policy defines new operating characteristics for the server; and

establishing the new server policy as the currently active server policy such that the server functions according to the operating characteristics of the new server policy.

17. A method as recited in claim 16 wherein the new server policy causes the server to operate as a cache server.

18. A method as recited in claim 16 wherein the new server policy causes the server to operate as an origin server.

19. A method as recited in claim 16 further comprising:

receiving a third server policy, wherein the third server policy defines a set of operating characteristics for the server; and

establishing the third server policy as the currently active server policy such that the server functions according to the operating characteristics of the third server policy.

20. A method as recited in claim 16 wherein the new server policy further defines a manner in which the server handles media content received from a plurality of media content sources.

* * * * *