US005881272A

# United States Patent [19]

**Balmer**

[11] **Patent Number: 5,881,272**

[45] **Date of Patent: Mar. 9, 1999**

[54] **SYNCHRONIZED MIMD MULTI-PROCESSING SYSTEM AND METHOD INHIBITING INSTRUCTION FETCH AT OTHER PROCESSORS ON WRITE TO PROGRAM COUNTER OF ONE PROCESSOR**

[75] Inventor: **Keith Balmer**, Bedford, England

[73] Assignee: **Texas Instruments Incorporated**, Dallas, Tex.

[21] Appl. No.: **922,152**

[22] Filed: **Sep. 2, 1997**

**Related U.S. Application Data**

[62] Division of Ser. No. 485,305, Jun. 7, 1995, Pat. No. 5,809,288, which is a continuation of Ser. No. 32,530, Mar. 15, 1993, which is a continuation of Ser. No. 437,853, Nov. 17, 1989, abandoned.

[51] **Int. Cl.**[6] ..... **G06F 15/16**

[52] **U.S. Cl.** ..... **395/553**; 395/381; 395/800.21

[58] **Field of Search** ..... 395/553, 200.78, 395/381, 800.21

[56] **References Cited**

U.S. PATENT DOCUMENTS

| | | | |
|---|---|---|---|
| 4,733,353 | 3/1988 | Jaswa | 395/553 |
| 5,107,420 | 4/1992 | Kametani | 395/676 |

*Primary Examiner*—Thomas M. Heckler
*Attorney, Agent, or Firm*—Robert D. Marshall, Jr.; Gerald E. Laws; Richard L. Donaldson

[57] **ABSTRACT**

A multi-processor system arranged, in one embodiment, as an image and graphics processor. The processor is structured with several individual processors all having communication links to several memories. The individual processors can, on a cycle by cycle basis, be grouped in any configuration to run in synchronism (but from different instruction streams) with the other processors in that group. More than one such synchronized group can be formed concurrently. A crossbar switch serves to establish the processor memory links and the entire image processor, including the individual processors, the crossbar switch and the memories are contained on a single silicon chip.

**27 Claims, 35 Drawing Sheets**

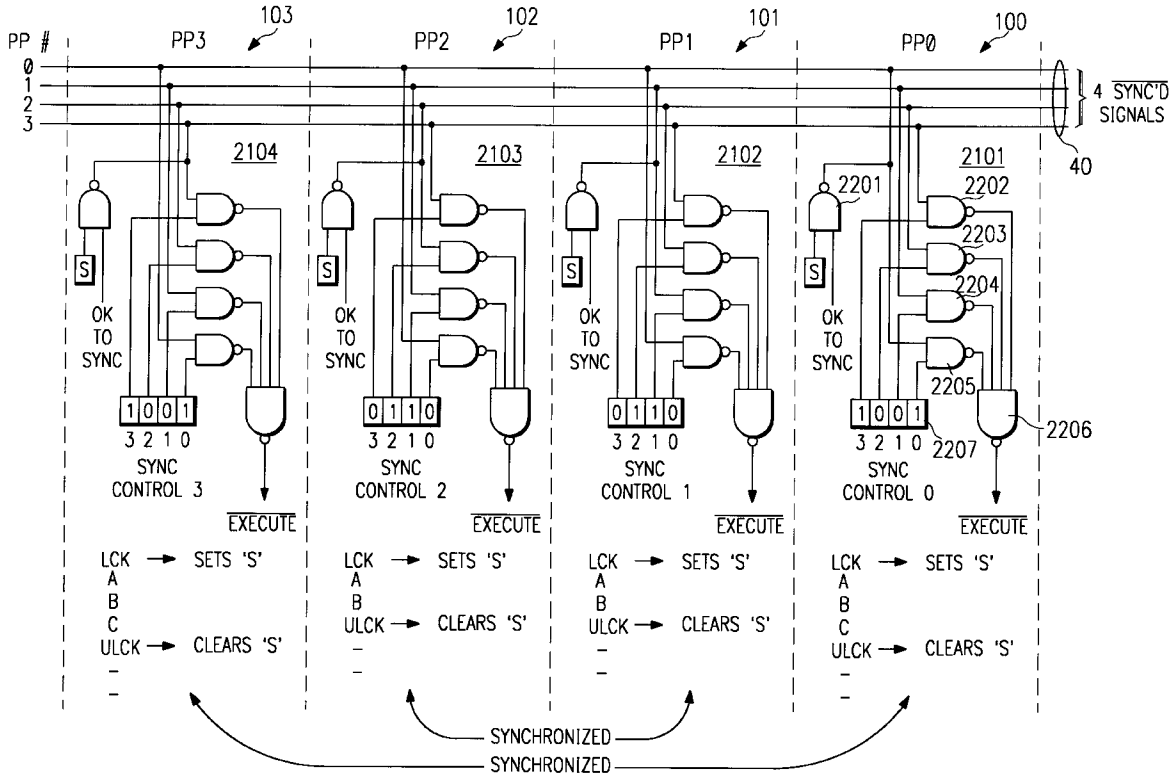


GOOGLE-1010

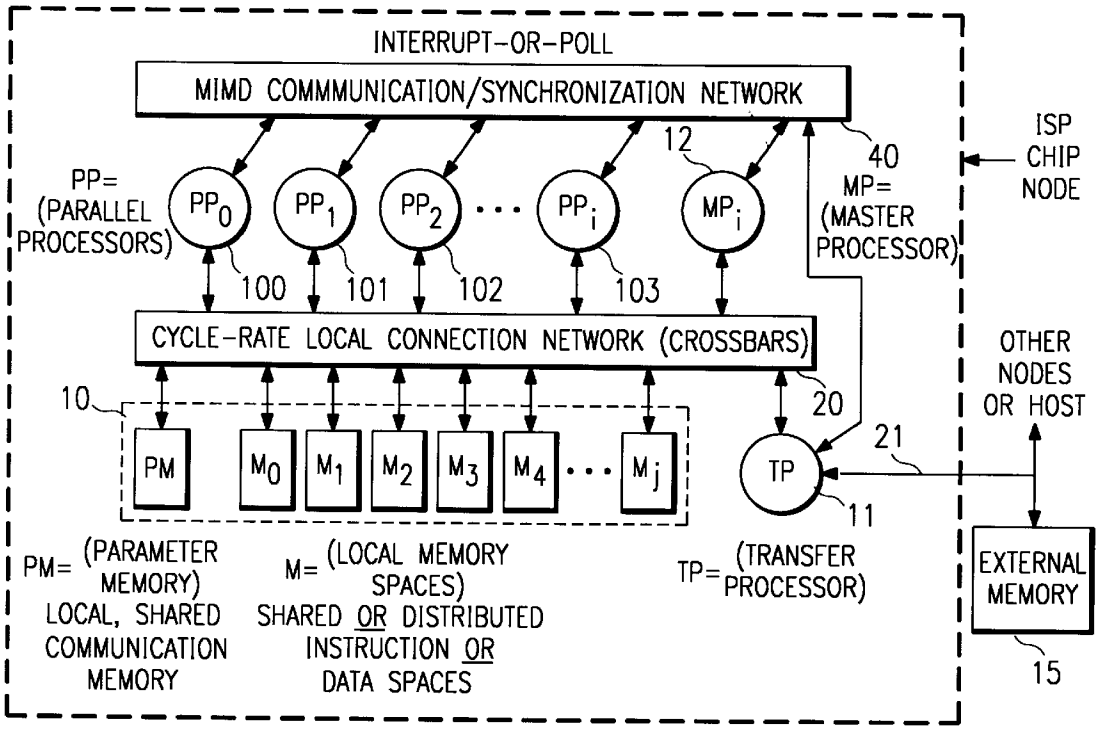
INTERRUPT-OR-POLL
MIMD COMMMUNICATION/SYNCHRONIZATION NETWORK
12
40
ISP CHIP NODE
PP= (PARALLEL PROCESSORS)
PP0
PP1
PP2
PPi
MPi
MP= (MASTER PROCESSOR)
100
101
102
103
CYCLE-RATE LOCAL CONNECTION NETWORK (CROSSBARS)
OTHER NODES OR HOST
10
20
21
PM
M0
M1
M2
M3
M4
Mj
TP
11
PM= (PARAMETER MEMORY) LOCAL, SHARED COMMUNICATION MEMORY
M= (LOCAL MEMORY SPACES) SHARED OR DISTRIBUTED INSTRUCTION OR DATA SPACES
TP= (TRANSFER PROCESSOR)
EXTERNAL MEMORY
15

*FIG. 1*

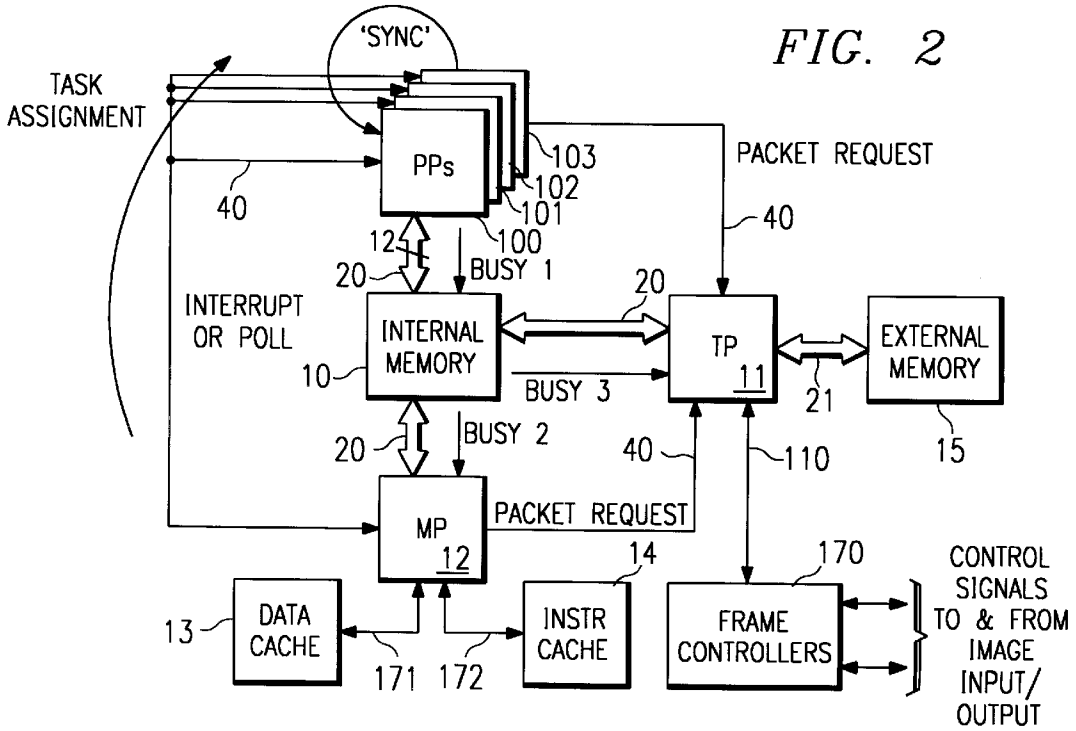
'SYNC'
TASK ASSIGNMENT
PPs
103
102
101
100
40
PACKET REQUEST
40
12
20
BUSY 1
20
INTERRUPT OR POLL
INTERNAL MEMORY
10
TP
11
EXTERNAL MEMORY
BUSY 3
21
20
BUSY 2
40
110
15
MP
12
PACKET REQUEST
14
170
CONTROL SIGNALS TO & FROM IMAGE INPUT/ OUTPUT
13
DATA CACHE
171
172
INSTR CACHE
FRAME CONTROLLERS

*FIG. 2*

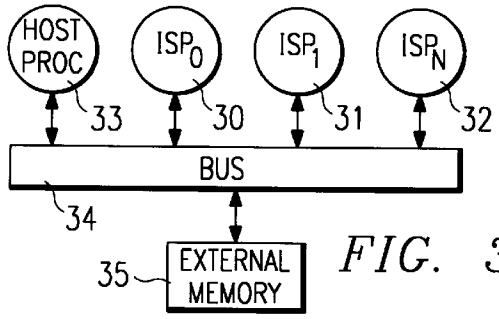


FIG. 3

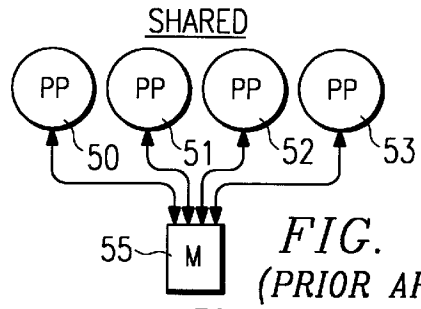


FIG. 5
(PRIOR ART)

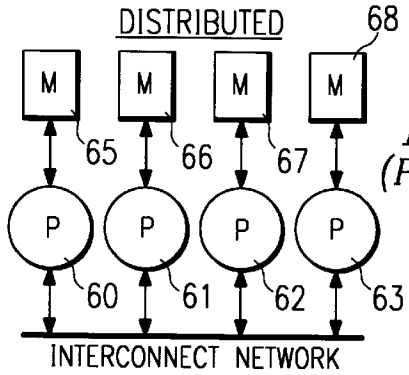


FIG. 6
(PRIOR ART)

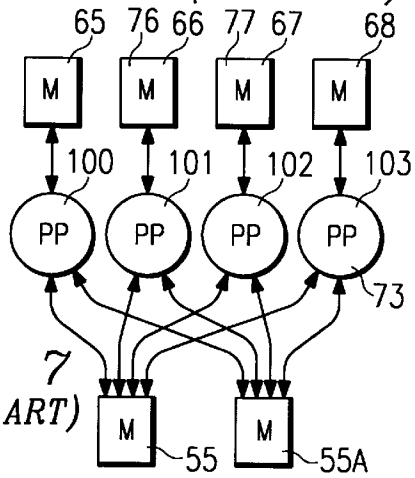


FIG. 7
(PRIOR ART)

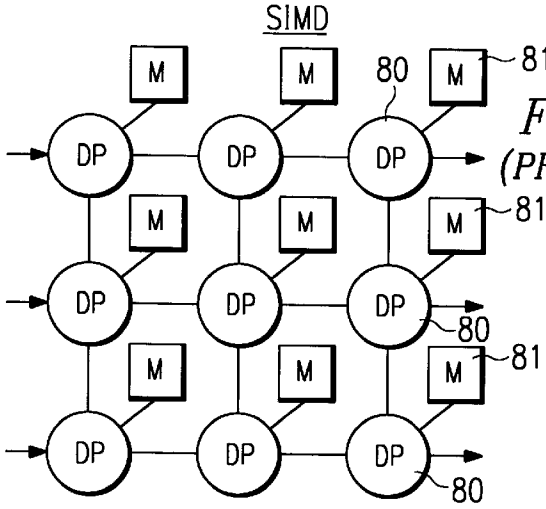


FIG. 8
(PRIOR ART)

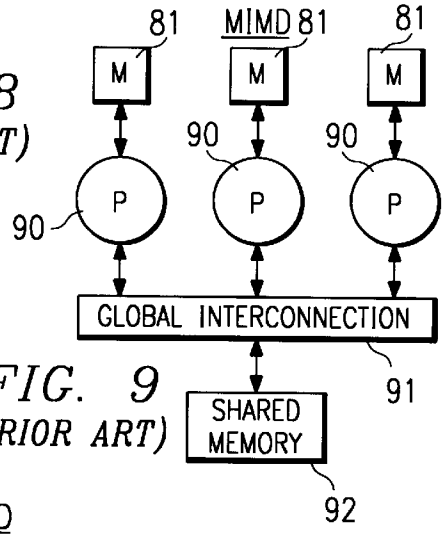


FIG. 9
(PRIOR ART)

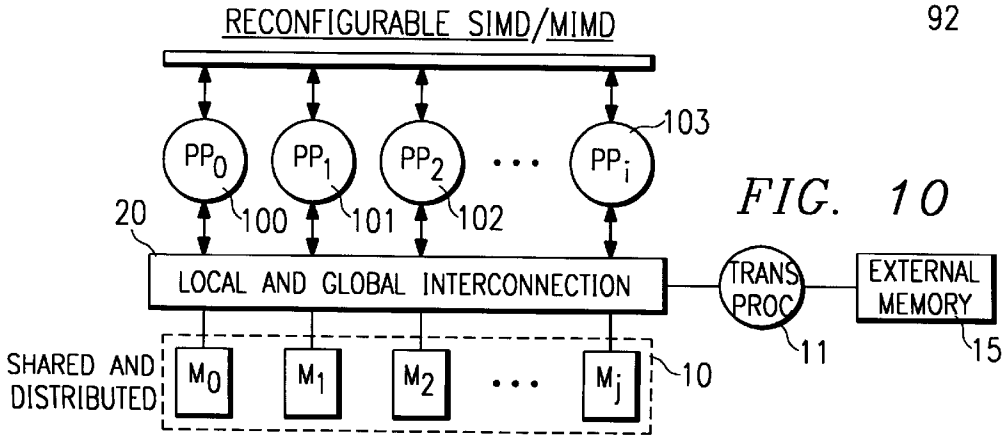


FIG. 10

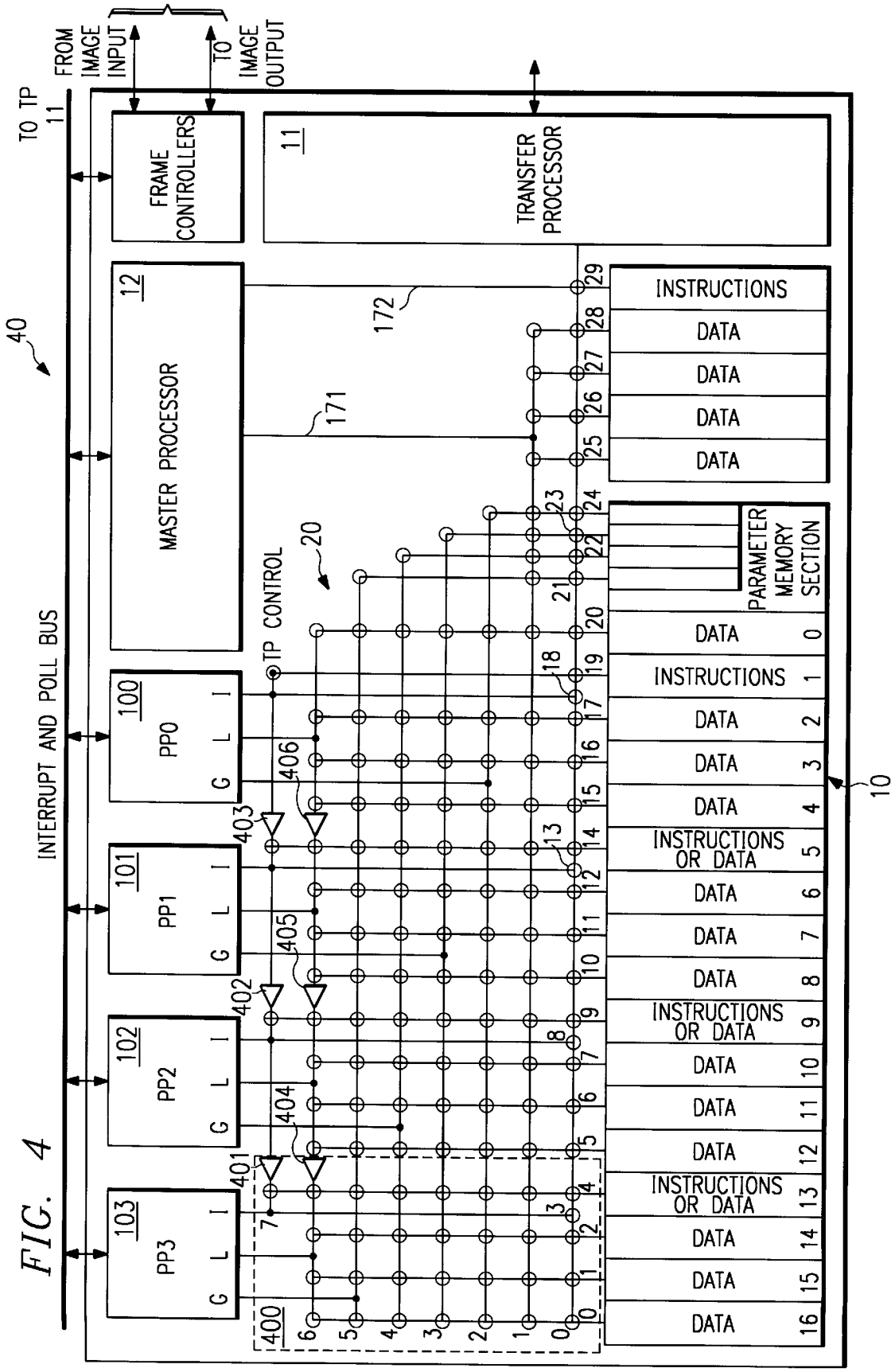
FROM IMAGE INPUT
TO IMAGE OUTPUT
TO TP 11
FRAME CONTROLLERS
11
TRANSFER PROCESSOR
12
MASTER PROCESSOR
40
INTERRUPT AND POLL BUS
100
PP0
101
PP1
102
PP2
103
PP3
G L I
TP CONTROL
20
172
171
400
401
402
403
404
405
406
INSTRUCTIONS
DATA
PARAMETER MEMORY SECTION
INSTRUCTIONS OR DATA
10

FIG. 4

FIG. 11

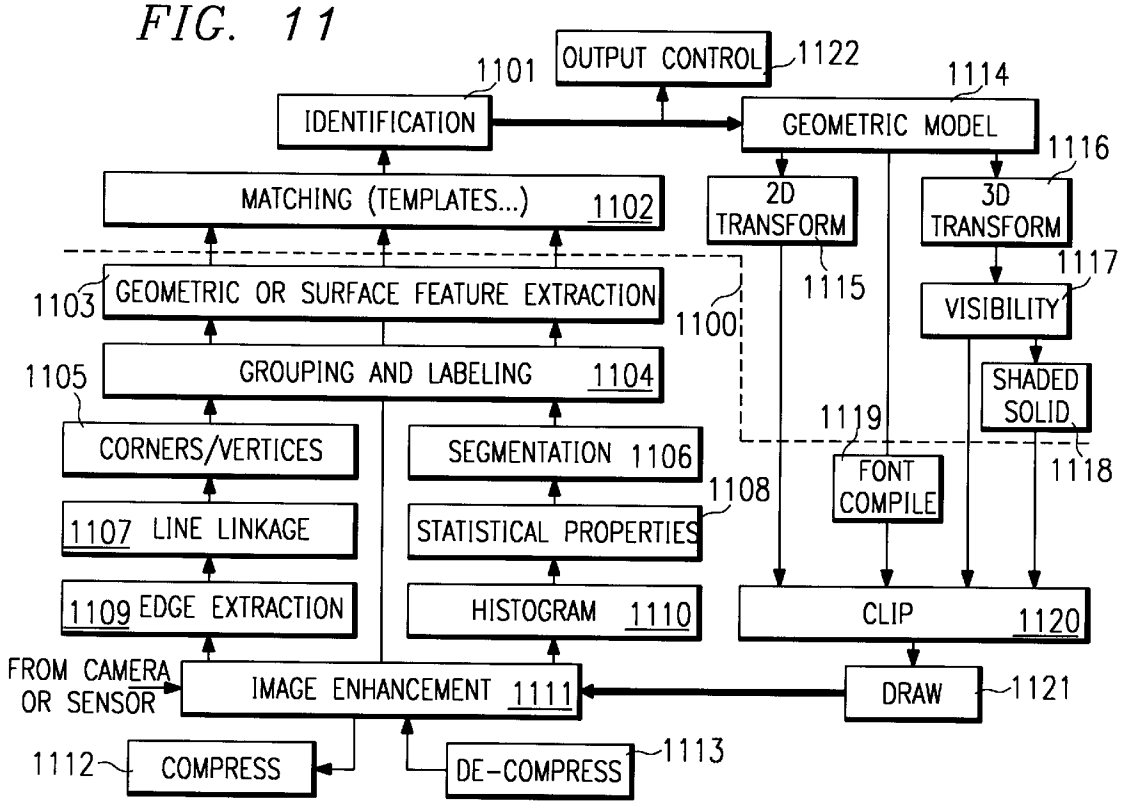
OUTPUT CONTROL
1122
1101
IDENTIFICATION
1114
GEOMETRIC MODEL
1116
MATCHING (TEMPLATES...) 1102
2D TRANSFORM
3D TRANSFORM
1117
1103
GEOMETRIC OR SURFACE FEATURE EXTRACTION
1100
1115
VISIBILITY
1105
GROUPING AND LABELING 1104
SHADED SOLID
1119
CORNERS/VERTICES
SEGMENTATION 1106
FONT COMPILE
1118
1108
1107 LINE LINKAGE
STATISTICAL PROPERTIES
1109 EDGE EXTRACTION
HISTOGRAM 1110
CLIP 1120
FROM CAMERA OR SENSOR
IMAGE ENHANCEMENT 1111
DRAW
1121
1112
COMPRESS
DE-COMPRESS
1113

FIG. 12

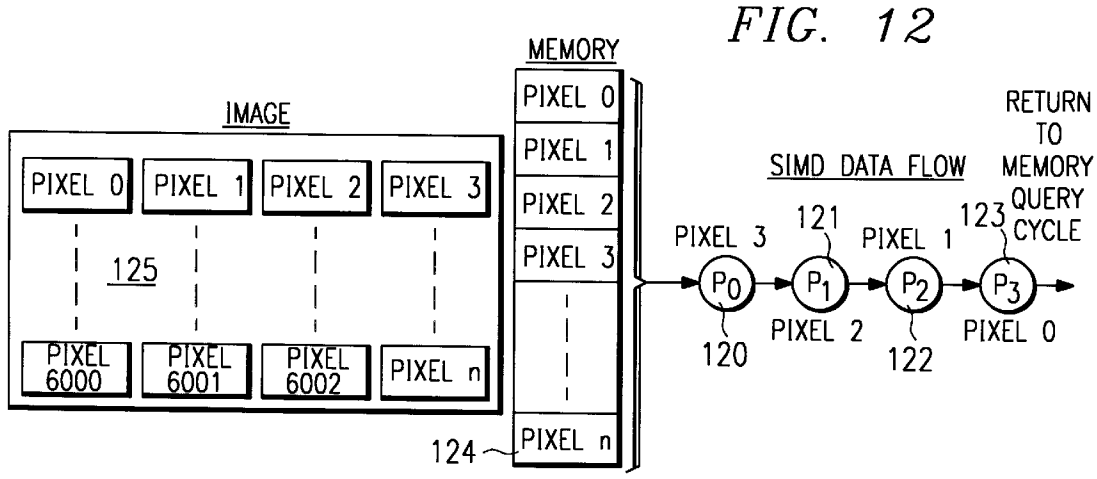
MEMORY
IMAGE
PIXEL 0
PIXEL 1
PIXEL 2
PIXEL 3
125
PIXEL 6000
PIXEL 6001
PIXEL 6002
PIXEL n
PIXEL 0
PIXEL 1
PIXEL 2
PIXEL 3
PIXEL n
124
SIMD DATA FLOW
RETURN TO MEMORY QUERY CYCLE
PIXEL 3
121
PIXEL 1
123
P0
P1
P2
P3
120
PIXEL 2
122
PIXEL 0

FIG. 13

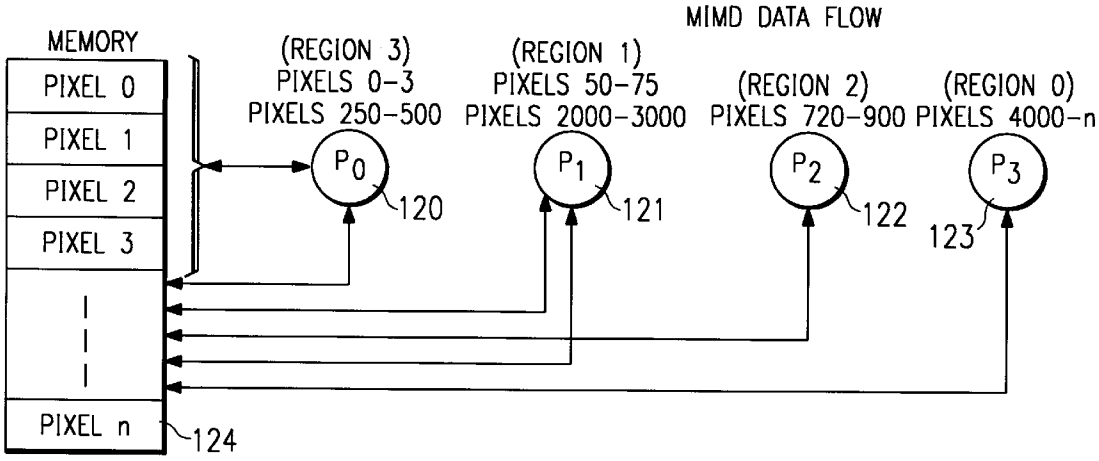


FIG. 14

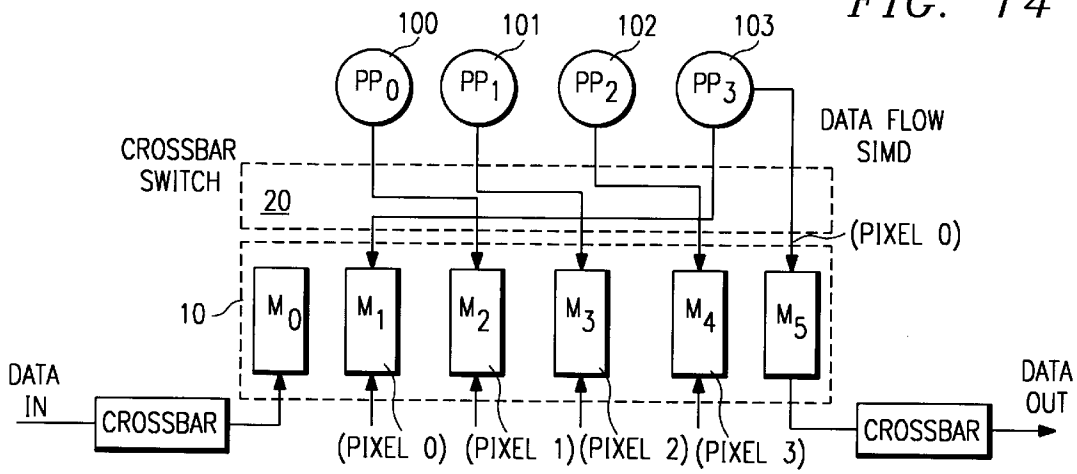


FIG. 15

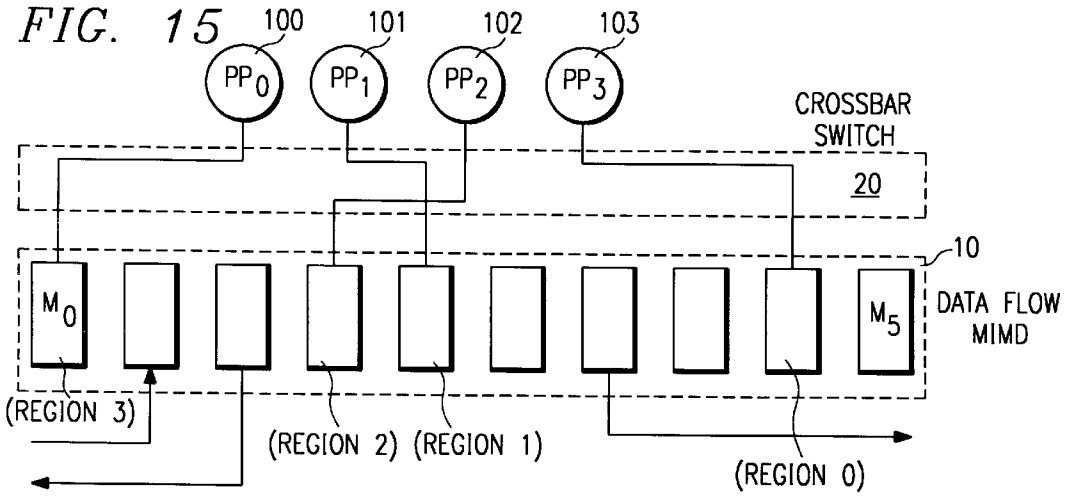

FIG. 16

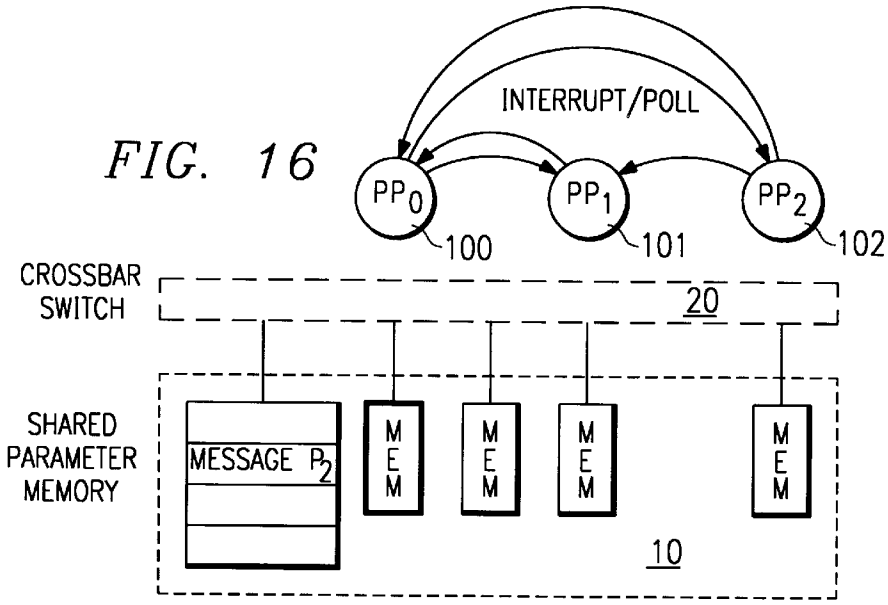
INTERRUPT/POLL
PP0
PP1
PP2
100
101
102
CROSSBAR SWITCH
20
SHARED PARAMETER MEMORY
MESSAGE P2
MEM
MEM
MEM
MEM
10

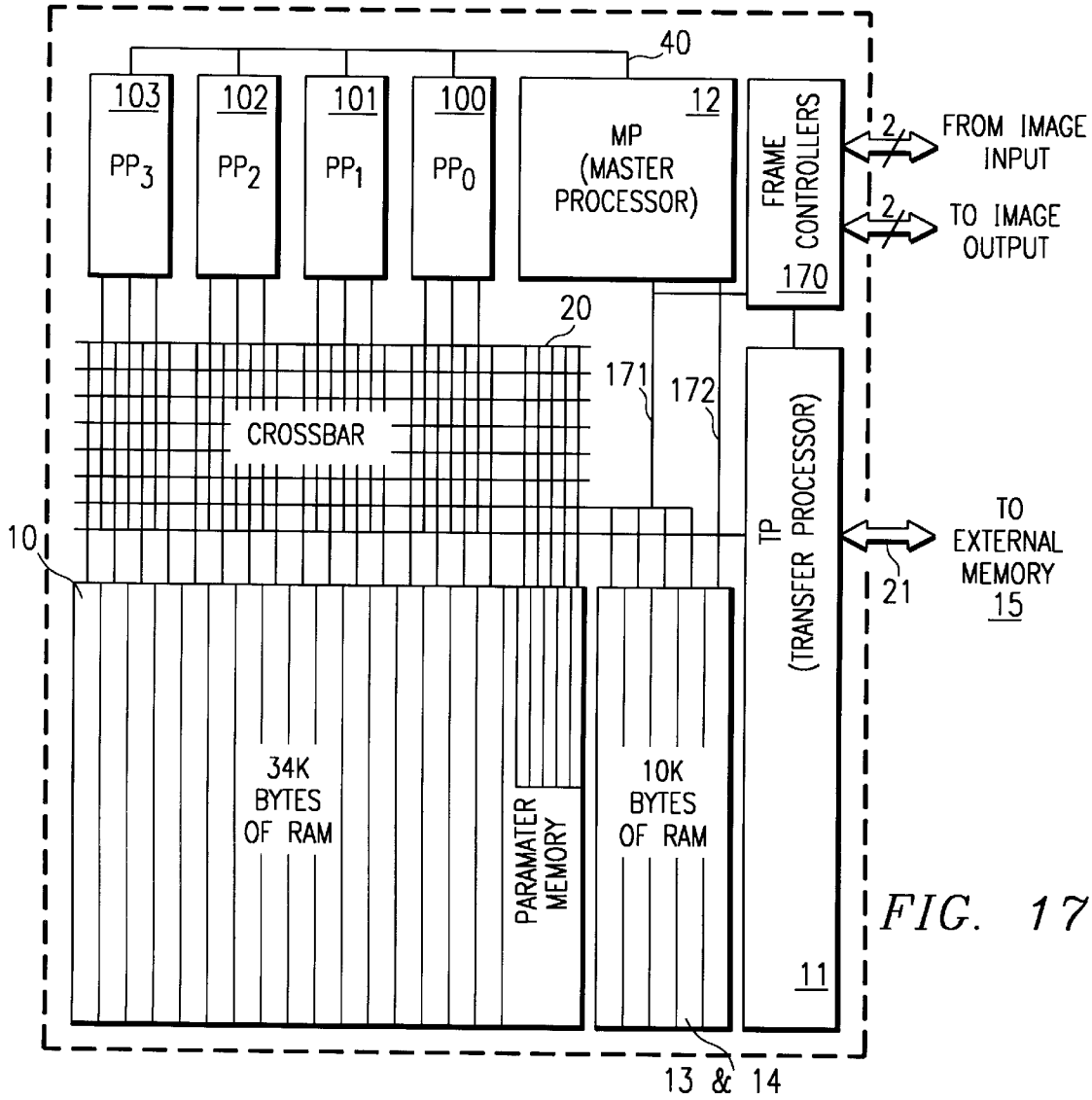
40
103
PP3
102
PP2
101
PP1
100
PP0
12
MP (MASTER PROCESSOR)
FRAME CONTROLLERS
170
2
FROM IMAGE INPUT
2
TO IMAGE OUTPUT
20
171
172
CROSSBAR
10
TP (TRANSFER PROCESSOR)
TO EXTERNAL MEMORY
15
21
34K BYTES OF RAM
PARAMATER MEMORY
10K BYTES OF RAM
11
13 & 14

FIG. 17

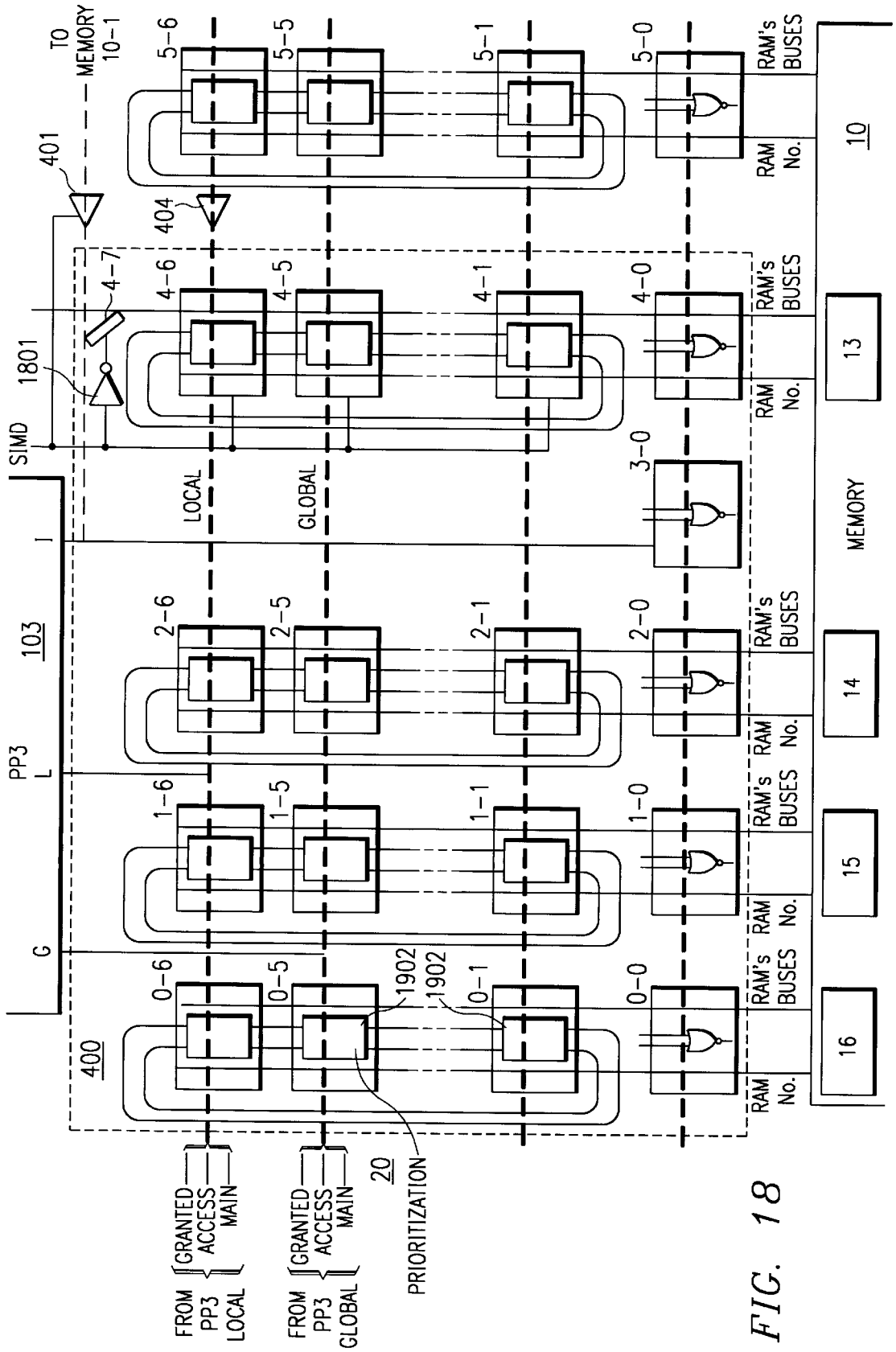
TO MEMORY 10-1
401
404
1801
4-7
SIMD
PP3
L
G
I
103
400
LOCAL
GLOBAL
5-6
5-5
5-1
5-0
4-6
4-5
4-1
4-0
3-0
2-6
2-5
2-1
2-0
1-6
1-5
1-1
1-0
0-6
0-5
0-1
0-0
1902
1902
RAM's BUSES
RAM No.
10
13
14
15
16
MEMORY
FROM PP3 LOCAL
GRANTED ACCESS MAIN
FROM PP3 GLOBAL
GRANTED ACCESS MAIN
20
PRIORITIZATION

FIG. 18

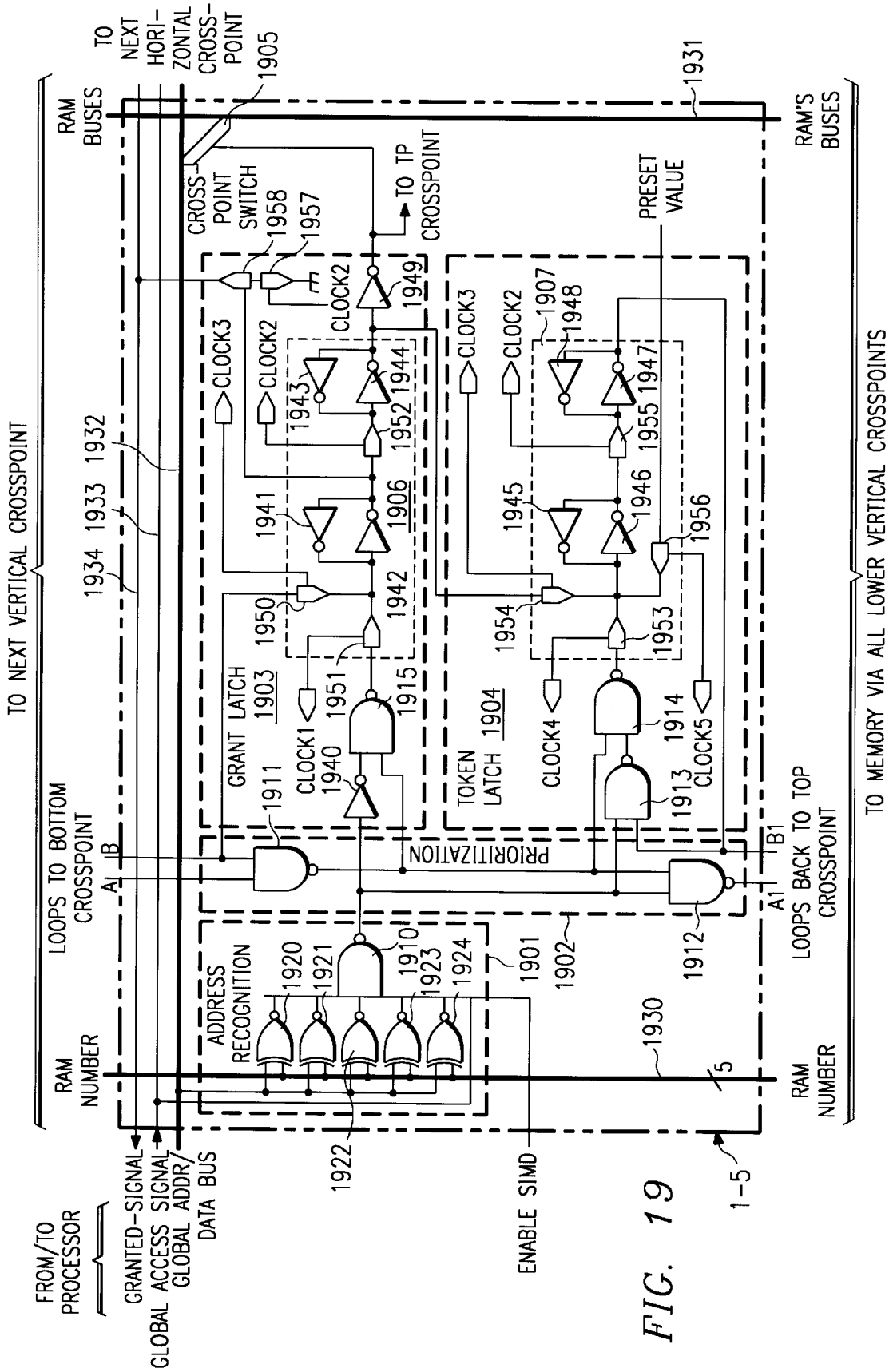
TO NEXT HORI-ZONTAL CROSS-POINT
1905
RAM BUSES
1931
RAM'S BUSES
CROSS-POINT SWITCH
1958
1957
TO TP CROSSPOINT
PRESET VALUE
CLOCK2
1949
CLOCK3
1907
1948
1943
1944
1952
1947
1955
1932
1933
1934
1941
1906
1945
1946
1956
1942
1950
1954
1953
1951
1915
GRANT LATCH 1903
TOKEN LATCH 1904
CLOCK1
1940
CLOCK4
1914
CLOCK5
1911
1913
TO NEXT VERTICAL CROSSPOINT
LOOPS TO BOTTOM CROSSPOINT
A1
B
PRIORITIZATION
B1
A1
LOOPS BACK TO TOP CROSSPOINT
TO MEMORY VIA ALL LOWER VERTICAL CROSSPOINTS
ADDRESS RECOGNITION
1920
1921
1910
1923
1924
1901
1902
1912
1930
RAM NUMBER
5
RAM NUMBER
FROM/TO PROCESSOR
GRANTED-SIGNAL
GLOBAL ACCESS SIGNAL
GLOBAL ADDR/DATA BUS
1922
ENABLE SIMD
1-5

FIG. 19

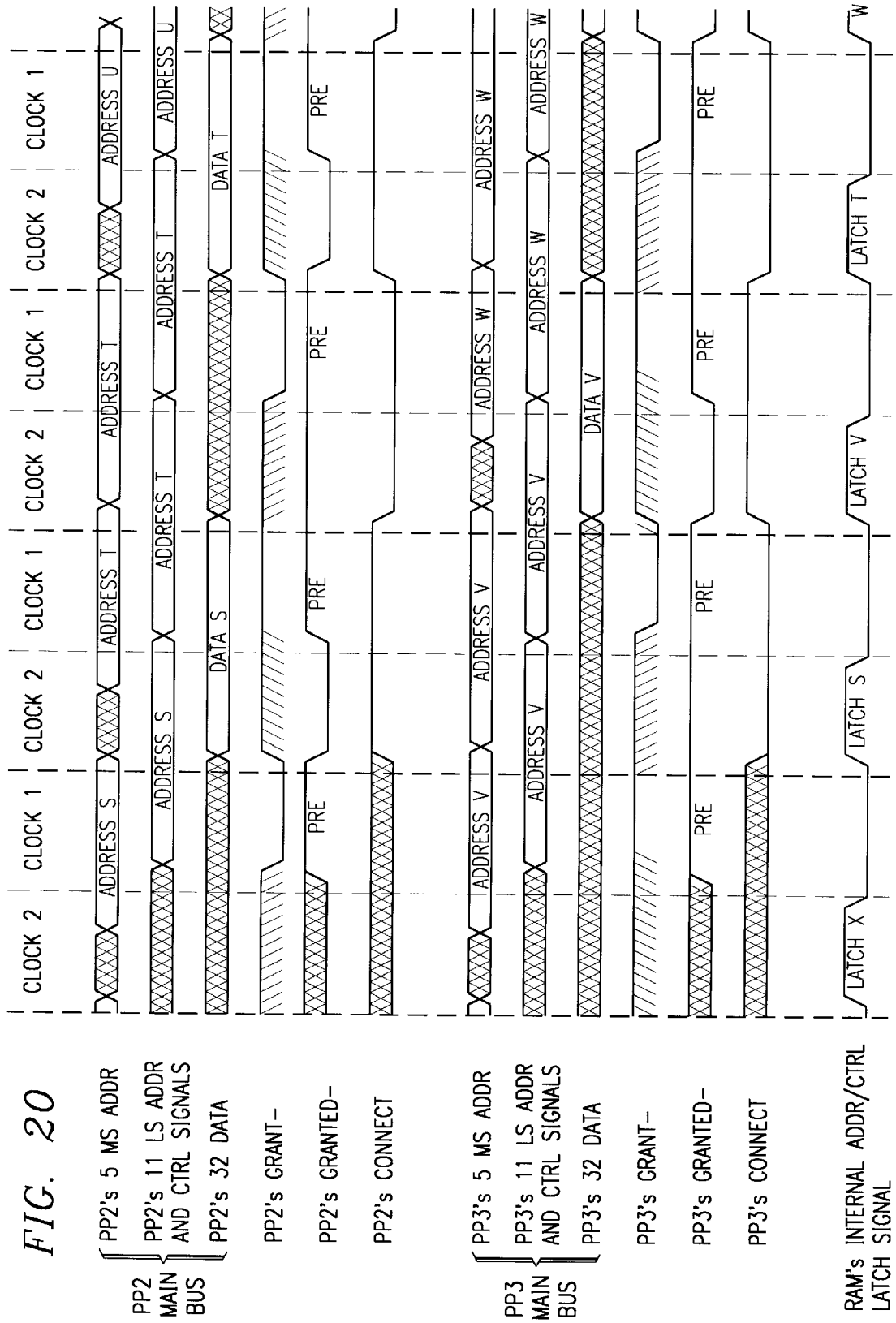
CLOCK 2
CLOCK 1
CLOCK 2
CLOCK 1
CLOCK 2
CLOCK 1
CLOCK 2
CLOCK 1
PP2 MAIN BUS
PP2's 5 MS ADDR
PP2's 11 LS ADDR AND CTRL SIGNALS
PP2's 32 DATA
PP2's GRANT-
PP2's GRANTED-
PP2's CONNECT
PP3 MAIN BUS
PP3's 5 MS ADDR
PP3's 11 LS ADDR AND CTRL SIGNALS
PP3's 32 DATA
PP3's GRANT-
PP3's GRANTED-
PP3's CONNECT
RAM's INTERNAL ADDR/CTRL LATCH SIGNAL
ADDRESS S
ADDRESS T
ADDRESS U
ADDRESS V
ADDRESS W
DATA S
DATA T
DATA V
PRE
LATCH X
LATCH S
LATCH V
LATCH T
W

FIG. 20

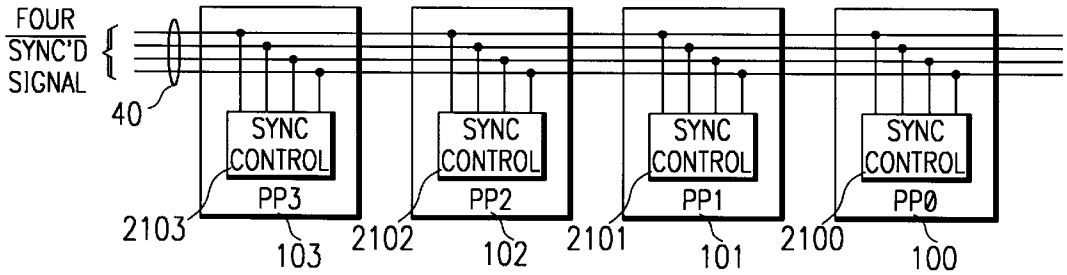


*FIG. 21*

| >0000 | >0800 | >1000 | >1800 | >2000 | >2800 | >3000 | >3800 |
|---|---|---|---|---|---|---|---|
| 64 PIXELS | 64 PIXELS | 64 PIXELS | >1900 >193F | >2100 >213F | 64 PIXELS | 64 PIXELS | 64 PIXELS |
| >07FF | >0FFF | >17FF | >1940 >1FFF | >27FF | >2FFF | >37FF | >3FFF |
| 0 | 1 | 2 | 3 | 4 | 5 | 6 | 7 |

NORMAL ARITHMETIC

| | | |
|---|---|---|
| >193F | - | 0 0 0 1 1 0 0 1 0 0 1 1 1 1 1 1 |
| + | | |
| >0001 | - | 0 0 0 0 0 0 0 0 0 0 0 0 0 0 0 1 |
| = | | |
| >1940 | - | 0 0 0 1 1 0 0 1 0 1 0 0 0 0 0 0 |

SLICED ARITHMETIC

SLICE NUMBER

| | | |
|---|---|---|
| >193F | - | 0 0 0 1 1 0 0 1 0 0 1 1 1 1 1 1 |
| (SLICE MASK) | | 0 0 0 0 0 1 1 1 1 1 0 0 0 0 0 0 |

CARRY

| | | |
|---|---|---|
| + | | |
| >0001 | - | 0 0 0 0 0 0 0 0 0 0 0 0 0 0 0 1 |
| = | | |
| >2100 | - | 0 0 1 0 0 0 0 1 0 0 0 0 0 0 0 0 |

*FIG. 27*

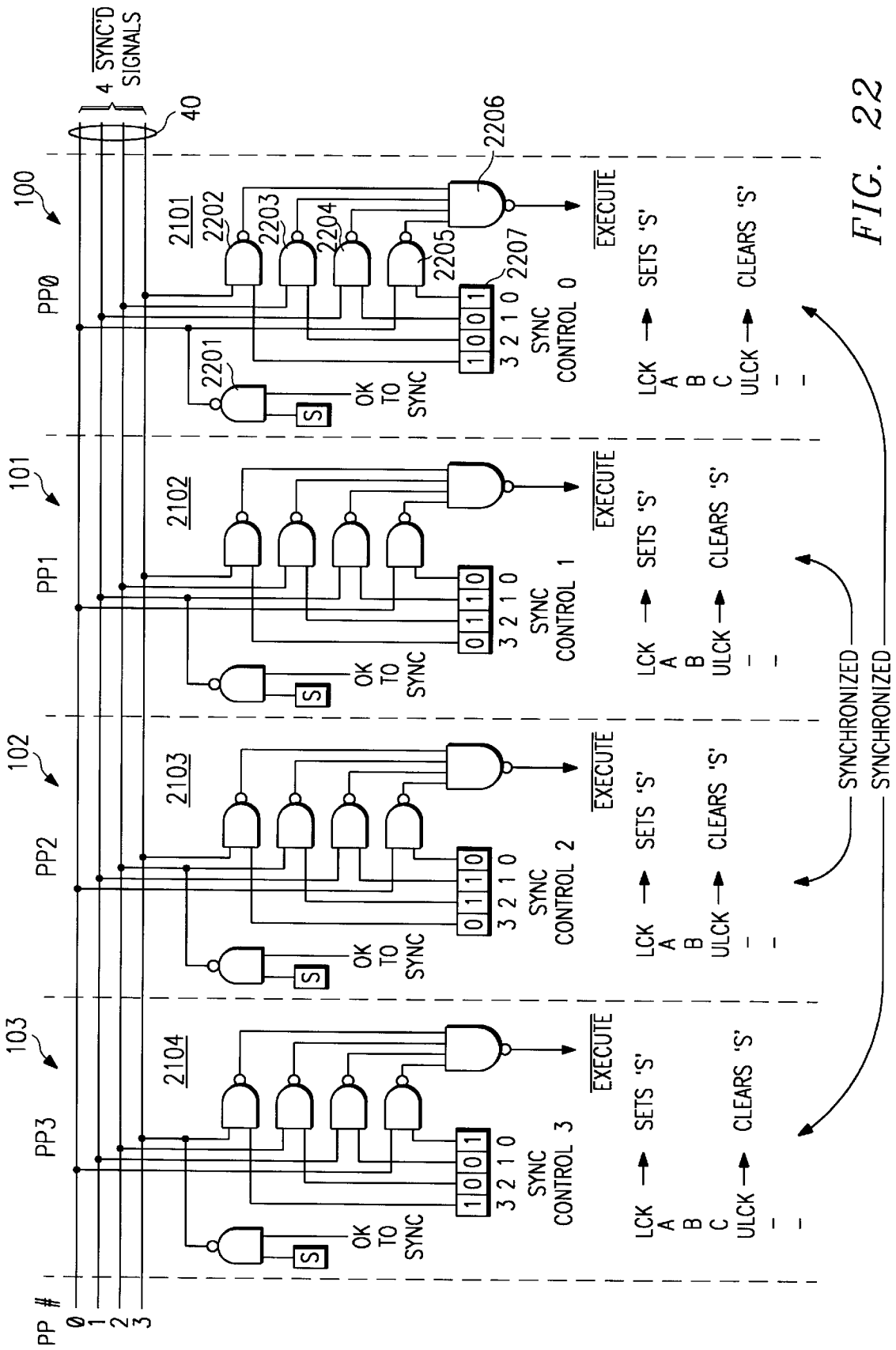
4 SYNC'D SIGNALS
40
100
101
102
103
PP0
PP1
PP2
PP3
PP #
0
1
2
3
2101
2102
2103
2104
2201
2202
2203
2204
2205
2206
2207
OK TO SYNC
S
SYNC CONTROL 0
SYNC CONTROL 1
SYNC CONTROL 2
SYNC CONTROL 3
3 2 1 0
EXECUTE
LCK → SETS 'S'
A
B
C
ULCK → CLEARS 'S'
SYNCHRONIZED
SYNCHRONIZED

FIG. 22

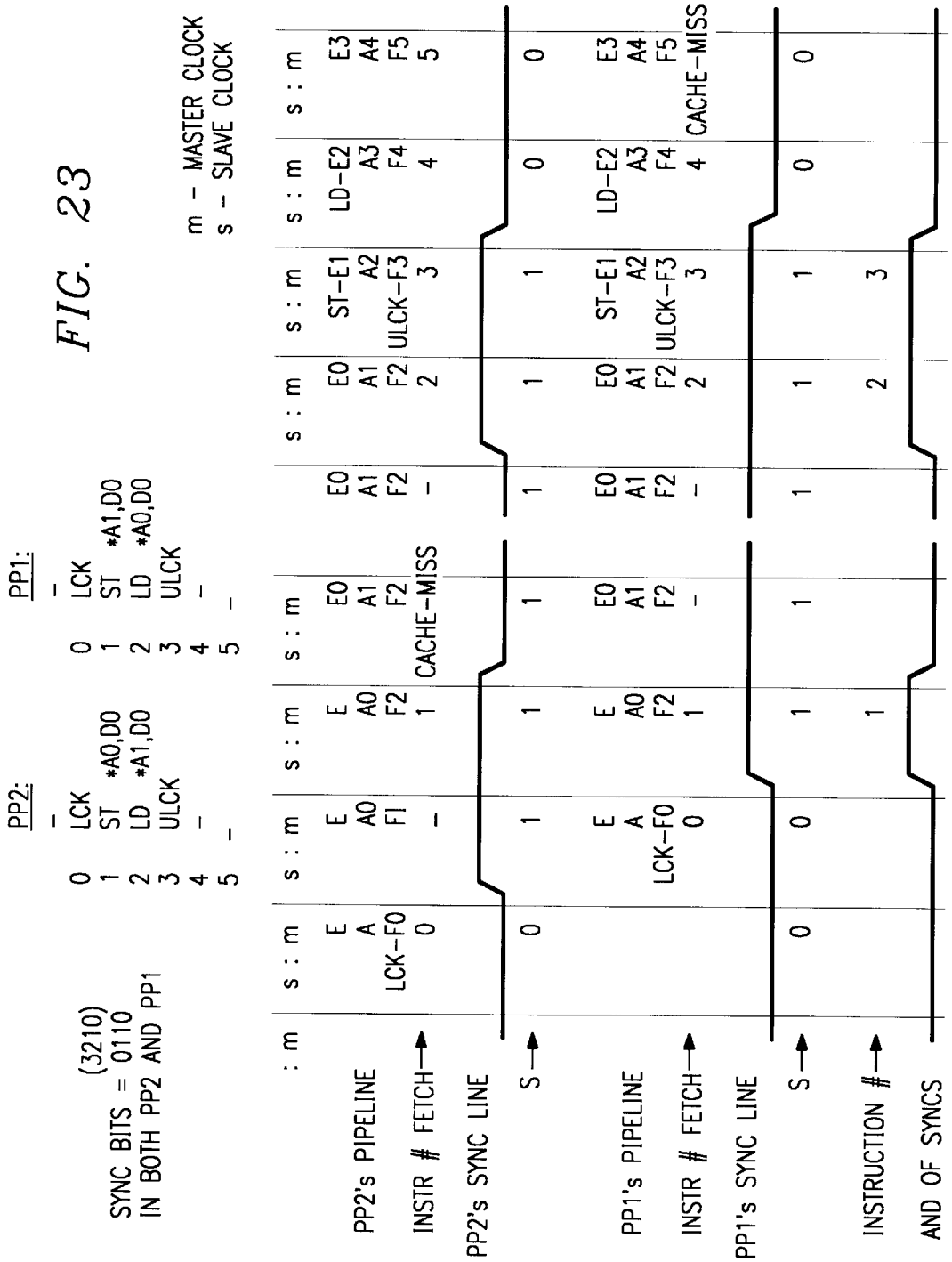
PP2:
0 LCK
1 ST *A0,D0
2 LD *A1,D0
3 ULCK
4 –
5 –
PP1:
0 LCK
1 ST *A1,D0
2 LD *A0,D0
3 ULCK
4 –
5 –
SYNC BITS = 0110 (3210)
IN BOTH PP2 AND PP1
m – MASTER CLOCK
s – SLAVE CLOCK
PP2's PIPELINE
INSTR # FETCH→
PP2's SYNC LINE
S→
PP1's PIPELINE
INSTR # FETCH→
PP1's SYNC LINE
S→
INSTRUCTION #→
AND OF SYNCS
CACHE-MISS
CACHE-MISS

FIG. 23

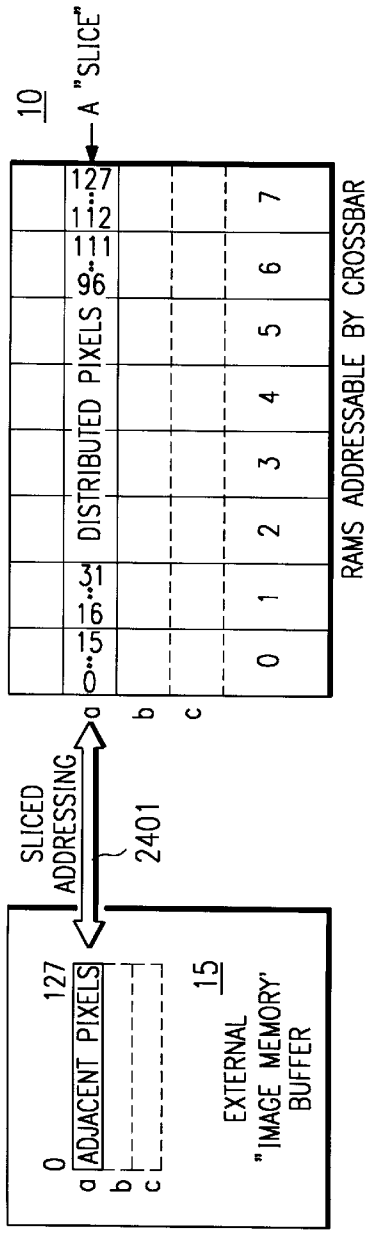


FIG. 24

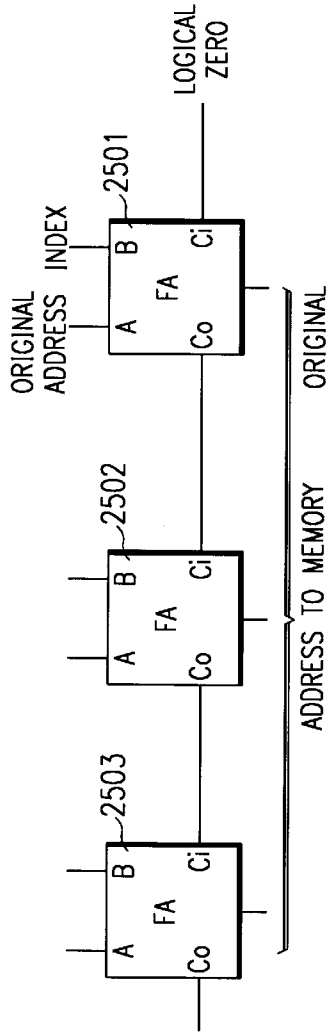


FIG. 25
(PRIOR ART)

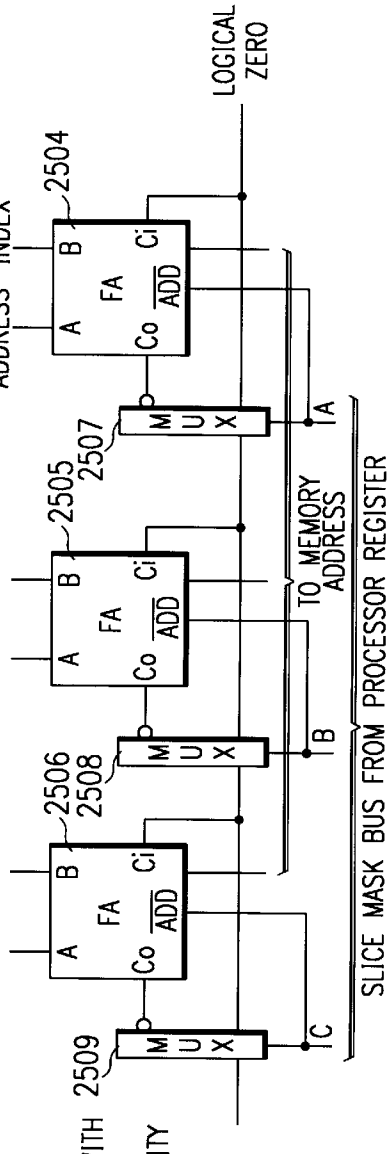


FIG. 26

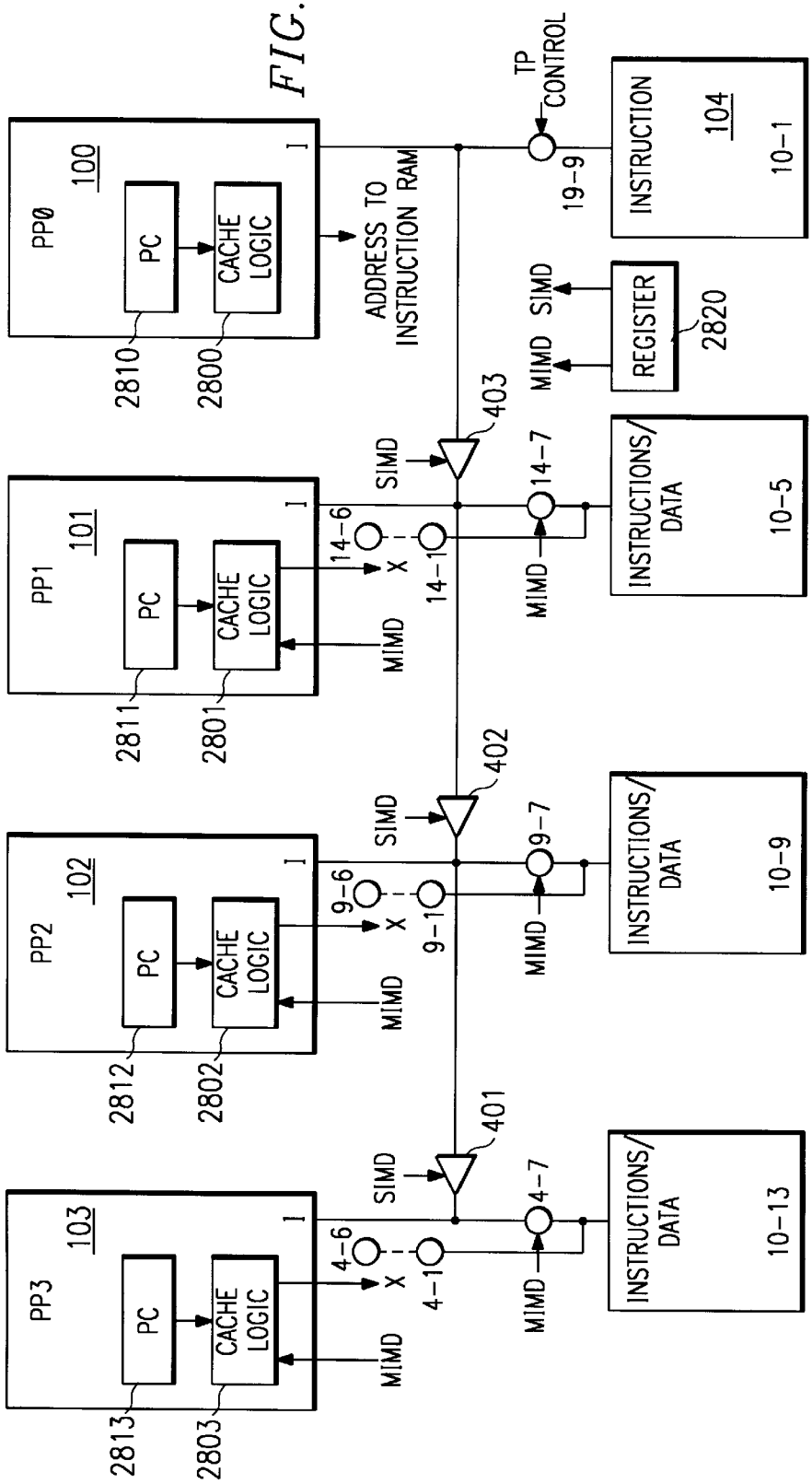
PP0
100
PC
CACHE LOGIC
2810
2800
ADDRESS TO INSTRUCTION RAM
TP CONTROL
19-9
INSTRUCTION
104
10-1
PP1
101
PC
CACHE LOGIC
2811
2801
14-6
X
14-1
MIMD
SIMD
403
14-7
MIMD
INSTRUCTIONS/ DATA
10-5
MIMD SIMD
REGISTER
2820
PP2
102
PC
CACHE LOGIC
2812
2802
9-6
X
9-1
MIMD
SIMD
402
9-7
MIMD
INSTRUCTIONS/ DATA
10-9
PP3
103
PC
CACHE LOGIC
2813
2803
4-6
X
4-1
MIMD
SIMD
401
4-7
MIMD
INSTRUCTIONS/ DATA
10-13

FIG. 28

FIG. 29

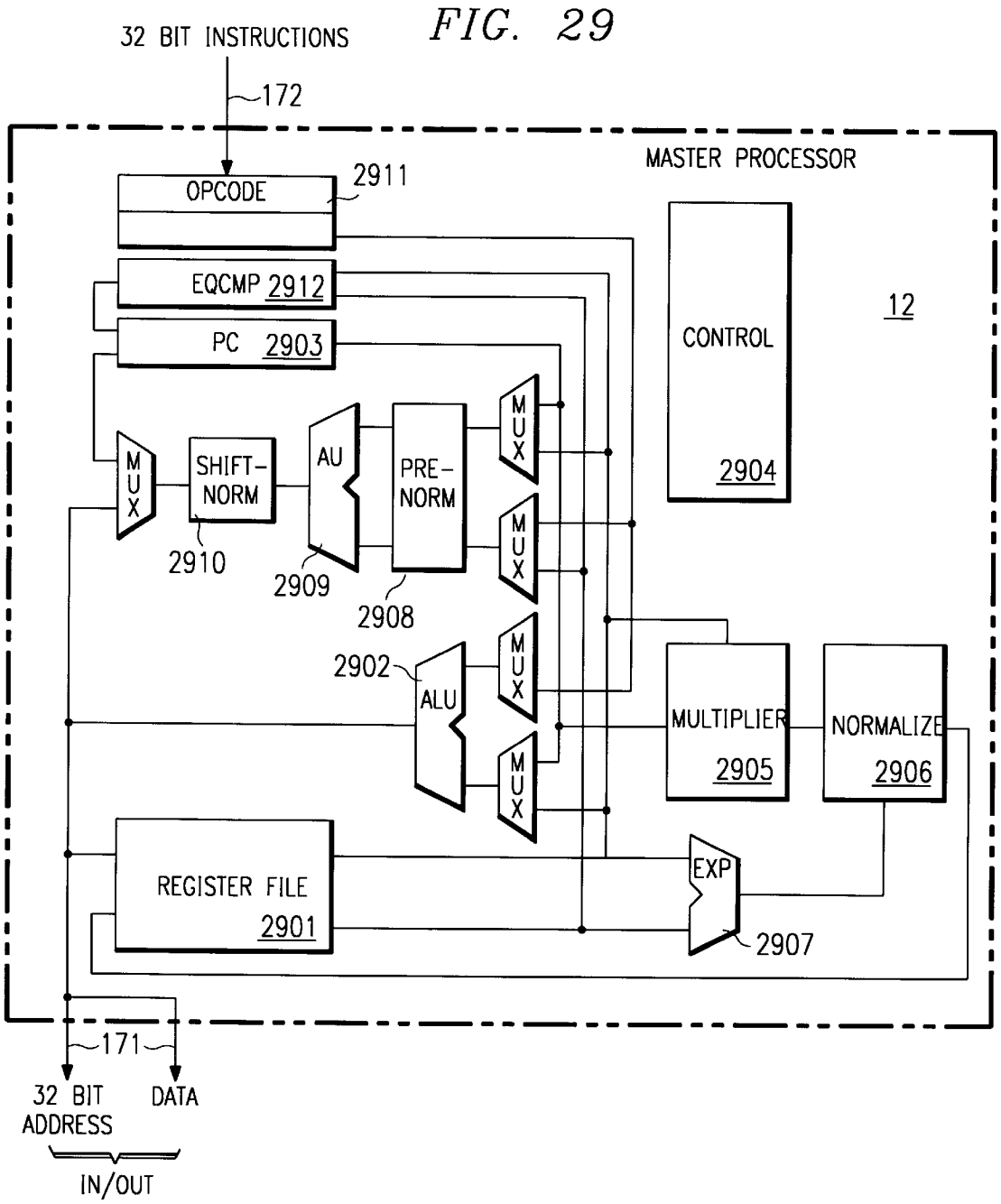
32 BIT INSTRUCTIONS
172
MASTER PROCESSOR
OPCODE
2911
EQCMP 2912
PC 2903
CONTROL
2904
12
MUX
SHIFT-NORM
2910
AU
2909
PRE-NORM
2908
MUX
MUX
2902
ALU
MUX
MUX
MULTIPLIER
2905
NORMALIZE
2906
REGISTER FILE
2901
EXP
2907
171
32 BIT ADDRESS
DATA
IN/OUT

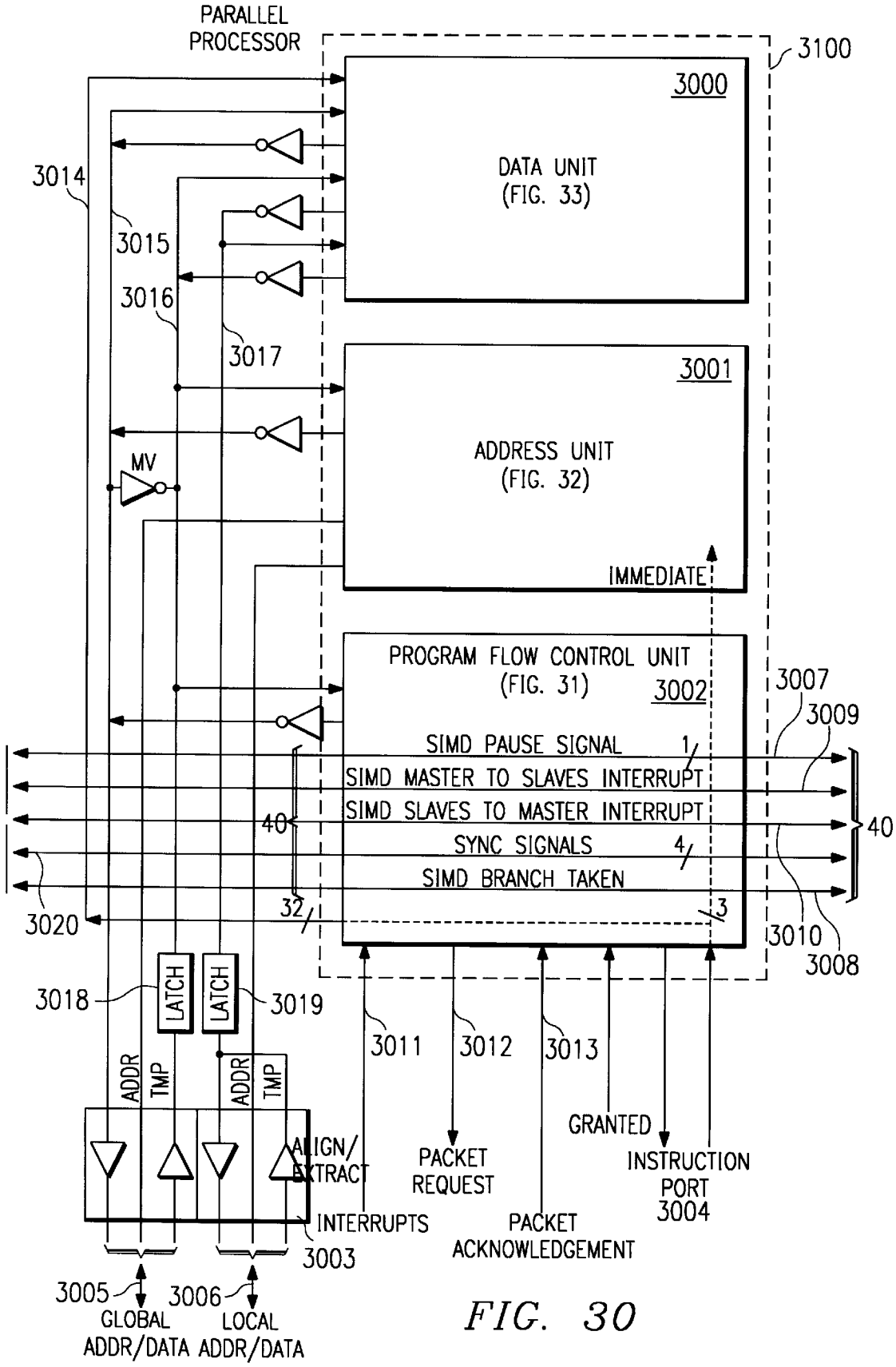
PARALLEL PROCESSOR
3100
3000
DATA UNIT (FIG. 33)
3014
3015
3016
3017
3001
ADDRESS UNIT (FIG. 32)
MV
IMMEDIATE
PROGRAM FLOW CONTROL UNIT (FIG. 31)
3002
3007
3009
SIMD PAUSE SIGNAL
SIMD MASTER TO SLAVES INTERRUPT
SIMD SLAVES TO MASTER INTERRUPT
SYNC SIGNALS
SIMD BRANCH TAKEN
40
1
4
32
3
3020
3010
3008
LATCH
LATCH
3018
3019
ADDR
TMP
ADDR
TMP
3011
3012
3013
ALIGN/ EXTRACT
PACKET REQUEST
GRANTED
INSTRUCTION PORT 3004
INTERRUPTS
PACKET ACKNOWLEDGEMENT
3003
3005
3006
GLOBAL ADDR/DATA
LOCAL ADDR/DATA

FIG. 30

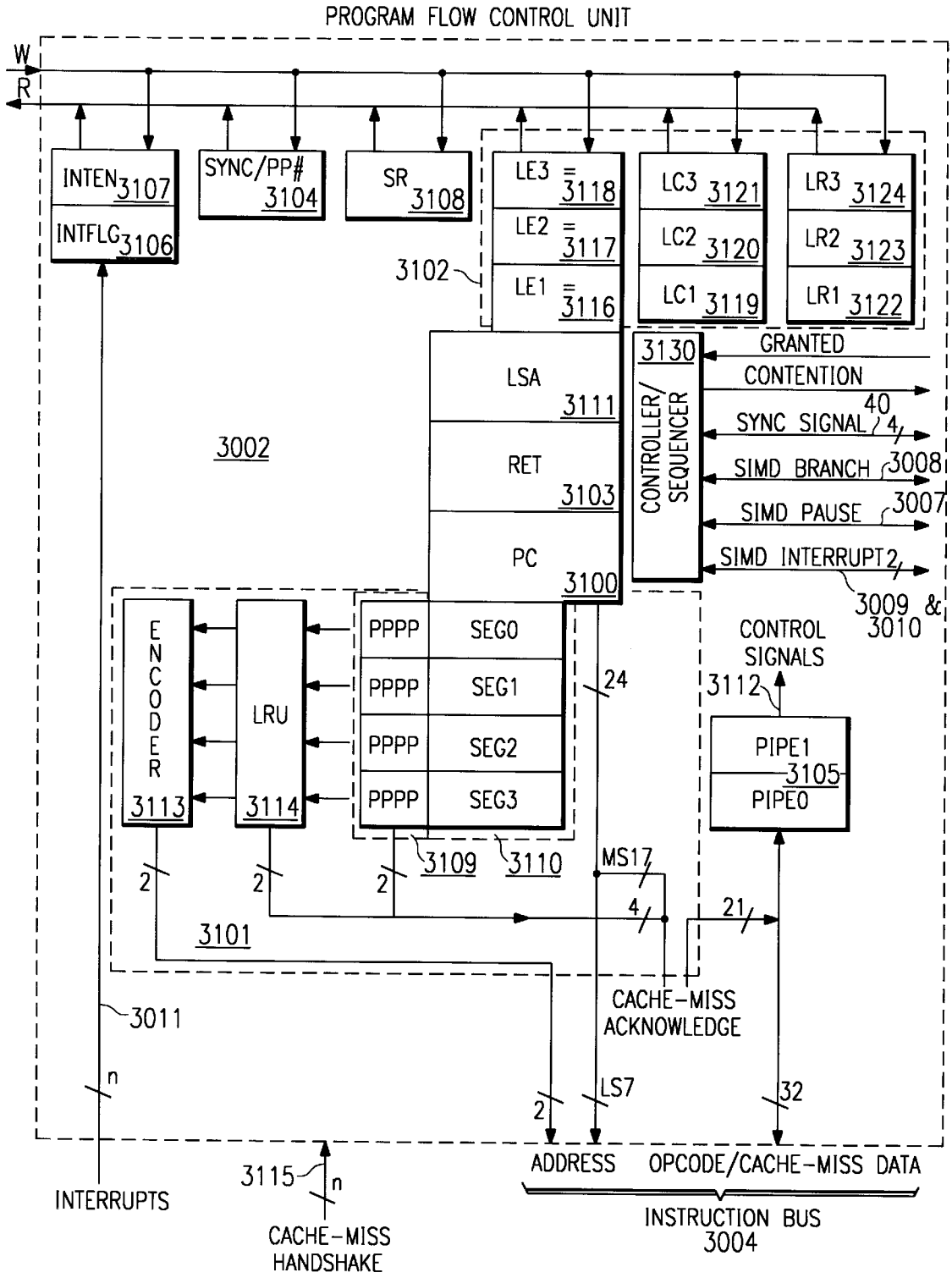
PROGRAM FLOW CONTROL UNIT
W
R
INTEN 3107
INTFLG 3106
SYNC/PP# 3104
SR 3108
LE3 = 3118
LE2 = 3117
LE1 = 3116
LC3 3121
LC2 3120
LC1 3119
LR3 3124
LR2 3123
LR1 3122
3102
3002
LSA 3111
RET 3103
PC 3100
3130
CONTROLLER/ SEQUENCER
GRANTED
CONTENTION
40
SYNC SIGNAL 4
SIMD BRANCH 3008
SIMD PAUSE 3007
SIMD INTERRUPT 2
3009 & 3010
CONTROL SIGNALS
3112
ENCODER 3113
LRU 3114
PPPP SEG0
PPPP SEG1
PPPP SEG2
PPPP SEG3
24
PIPE1 3105
PIPE0
3109
3110
MS17
2
2
2
4
21
3101
CACHE-MISS ACKNOWLEDGE
3011
n
2
LS7
32
3115
n
INTERRUPTS
CACHE-MISS HANDSHAKE
ADDRESS
OPCODE/CACHE-MISS DATA
INSTRUCTION BUS 3004

*FIG. 31*

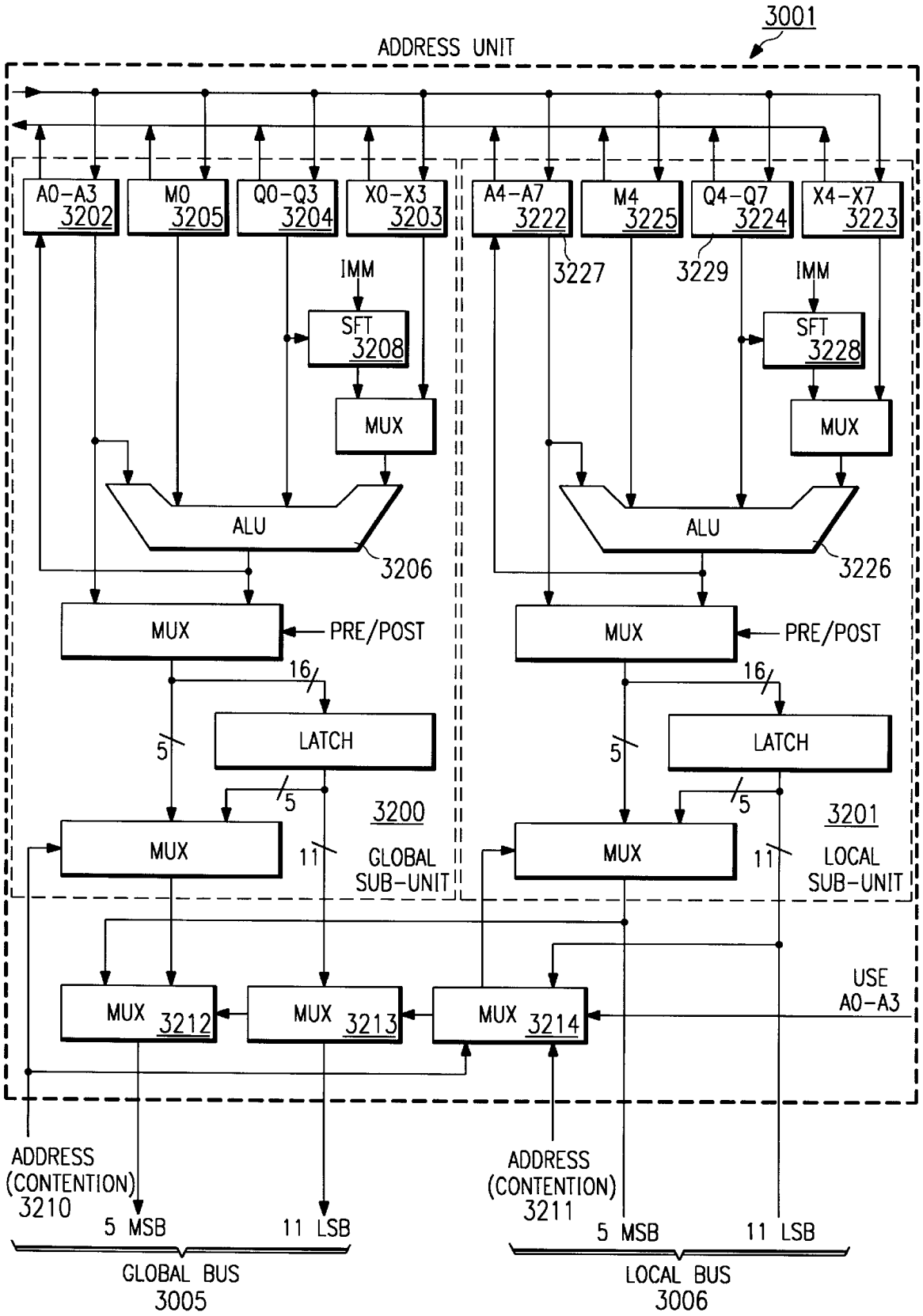
3001
ADDRESS UNIT
A0-A3 3202
M0 3205
Q0-Q3 3204
X0-X3 3203
A4-A7 3222
M4 3225
Q4-Q7 3224
X4-X7 3223
3227
3229
IMM
SFT 3208
SFT 3228
MUX
ALU
3206
3226
PRE/POST
16
5
LATCH
3200
GLOBAL SUB-UNIT
3201
LOCAL SUB-UNIT
11
MUX 3212
MUX 3213
MUX 3214
USE A0-A3
ADDRESS (CONTENTION) 3210
ADDRESS (CONTENTION) 3211
5 MSB
11 LSB
GLOBAL BUS 3005
LOCAL BUS 3006

FIG. 32

FIG. 33

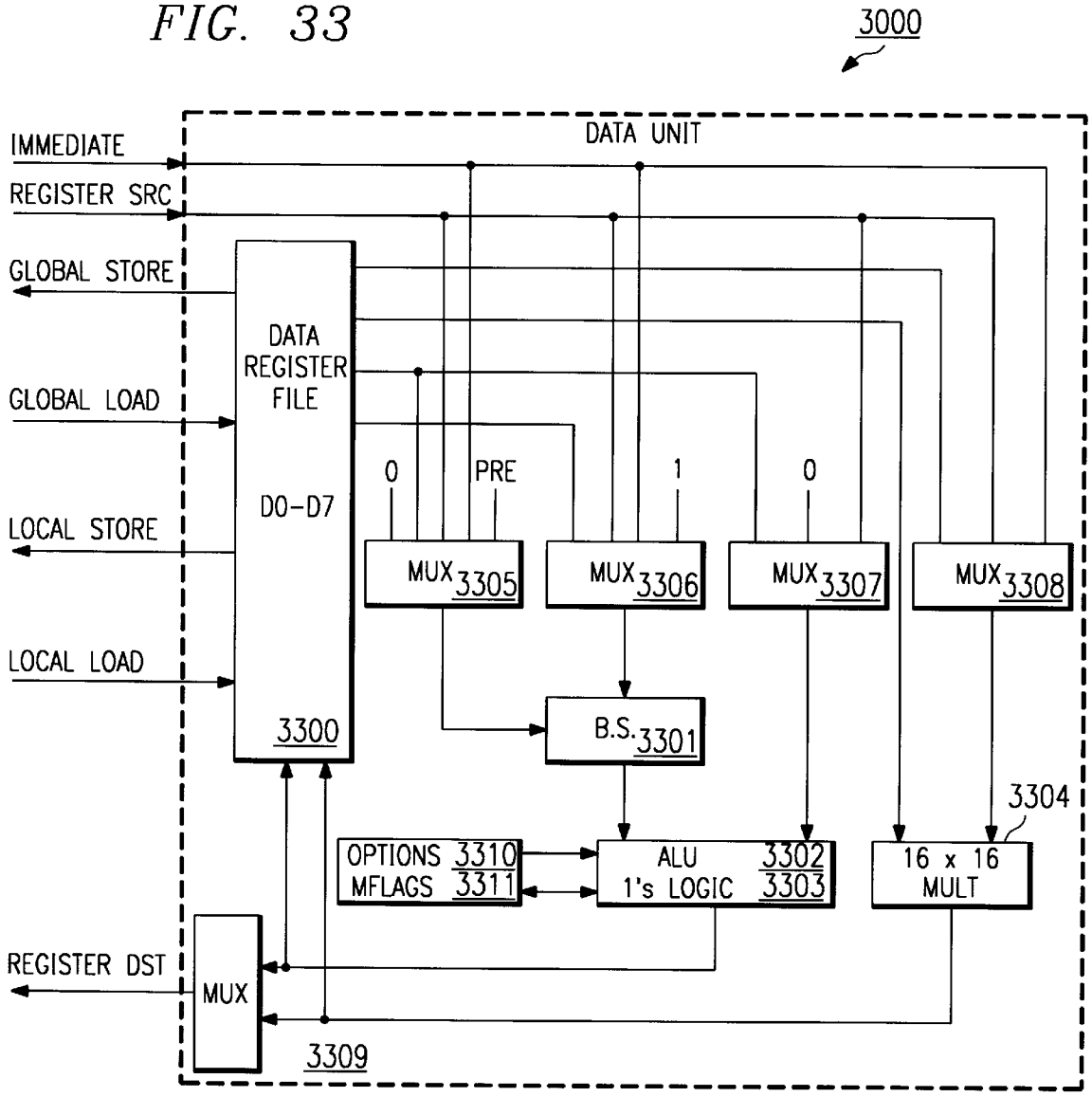
3000
DATA UNIT
IMMEDIATE
REGISTER SRC
GLOBAL STORE
GLOBAL LOAD
LOCAL STORE
LOCAL LOAD
REGISTER DST
DATA REGISTER FILE
D0-D7
3300
0
PRE
1
0
MUX 3305
MUX 3306
MUX 3307
MUX 3308
B.S. 3301
3304
OPTIONS 3310
MFLAGS 3311
ALU 3302
1's LOGIC 3303
16 x 16 MULT
MUX
3309

FIG. 34

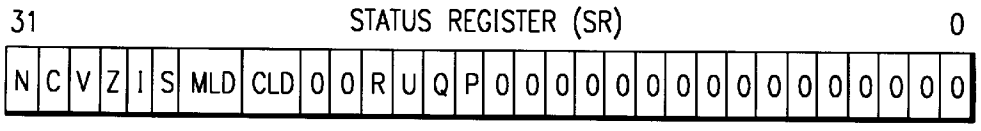
31
STATUS REGISTER (SR)
0
N C V Z I S MLD CLD 0 0 R U Q P 0 0 0 0 0 0 0 0 0 0 0 0 0 0 0 0

FIG. 35

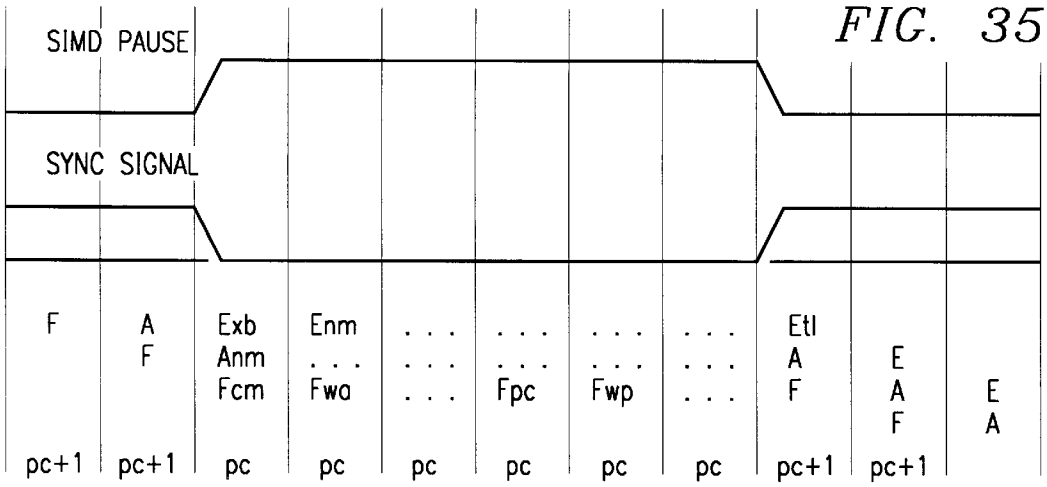


Fcm – CACHE-MISS
Anm – NO MASTER PHASE OF THE ADDRESS UNIT, THUS NO REGISTER MODIFY.
Exb – CROSSBAR ACCESS(ES) OCCUR. STORES COMPLETE TO MEMORY. LOADS COMPLETE INTO TEMPORARY LATCHES, MASTER PHASE OF DATA UNIT OPERATIONS KILLED.
Enm – NO MASTER PHASE OF DATA UNIT.
Fwa – WAIT FOR CACHE-MISS ACKNOWLEDGE FROM TP.
Fpc – TRANSFER PC AND SEGMENT NUMBER TO TP
Fwp – WAIT FOR SUBSEGMENT PRESENT FLAG TO BECOME SET.
EtL – TEMPORARY LATCH DATA (LOADS) COMPLETE INTO DESIGNATION REGISTER(S). DATA UNIT PERFORMS ITS ALU/MPY OPERATIONS.

FIG. 36

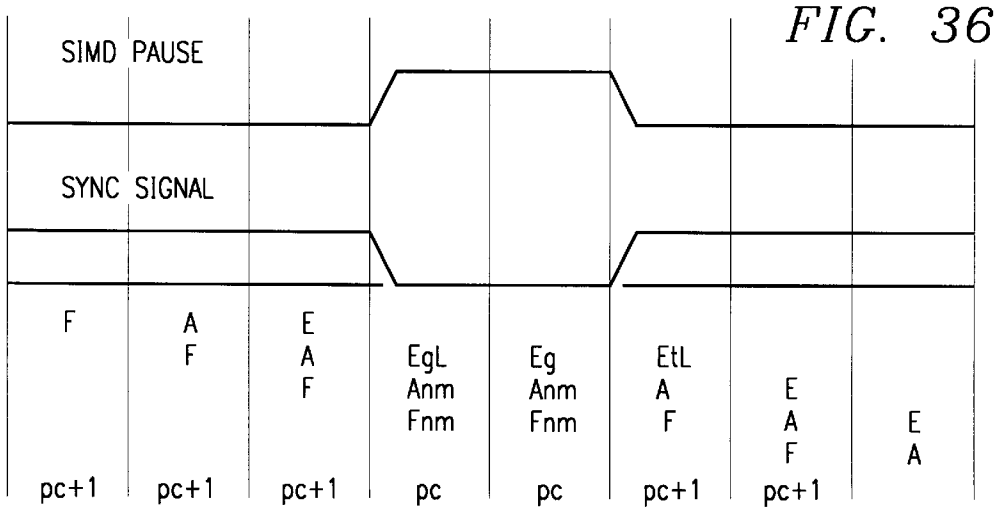


EgL – CONTENTION DETECTED ON BOTH GLOBAL AND LOCAL BUSES. NO MASTER PHASE IN DATA UNIT.
Fnm – NO MASTER PHASE ON FETCH. PIPE NOT LOADED.
Eg – CONTENTION DETECTED ON GLOBAL BUS. LOCAL BUS TRANSFER OCCURS. STORE TO MEMORY, OR LOAD TO TEMP REGISTER. NO MASTER PHASE IN DATA UNIT.
EtL – TEMPORARY LATCH DATA (LOADS) COMPLETE INTO DESTINATION REGISTER(S). DATA UNIT PERFORMS ITS ALU/MPY OPERATIONS.
Anm – NO MASTER PHASE IN ADDRESS UNIT. ADDRESS REGISTER NOT MODIFIED.

| | | | | | | | | |
|---|---|---|---|---|---|---|---|---|
| F | A<br>F | E<br>A<br>Fsa | E<br>A<br>Fer | E<br>A<br>Fsa | E<br>A<br>Fen | E<br>A<br>F | E<br>A | E |
| pc+1 | lc=2<br>pc+1<br>cld=1<br>mld=1 | pc+1 | pc=ea<br>lc<>1<br>pc:=sa<br>lc:=lc−1<br>cld:=mld | pc+1 | pc=ea<br>lc=1<br>pc+1<br>lc:=lr<br>cld:=cld−1 | pc+1 | | |

Fsa – START ADDRESS OF LOOP. PC INCREMENTS NORMALLY.
Fer – END ADDRESS, REPEAT LOOP. LOOP COUNTER NOT ONE. LOAD PC WITH START ADD.
Fen – END ADDRESS, NO-REPETITION. LOOP COUNTER IS ONE. PC INCREMENTS NORMALLY.

*FIG. 37*

*FIG. 38*

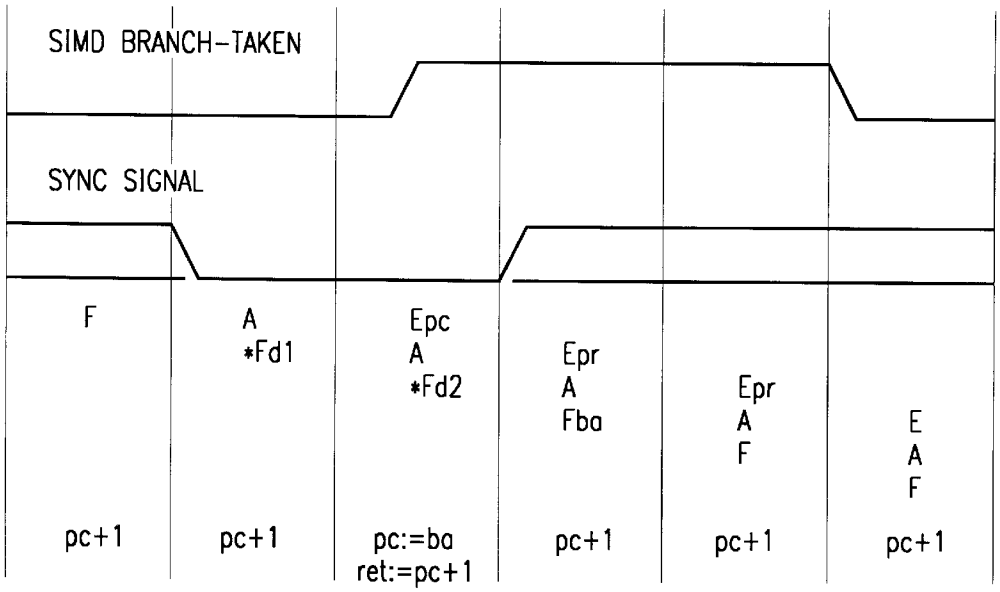


Epc – COPY PC+1 INTO RET. LOAD PC WITH BRANCH ADDRESS.
Epr – PUSH RET IF A CALL. (EITHER Epr CAN PUSH THE RETURN ADDRESS).
Fd1 – DELAY SLOT 1 INSTRUCTION FETCH.
Fd2 – DELAY SLOT 2 INSTRUCTION FETCH.
Fba – FETCH INSTRUCTION FROM BRANCH ADDRESS.
* – INTERRUPTS LOCKED OUT.

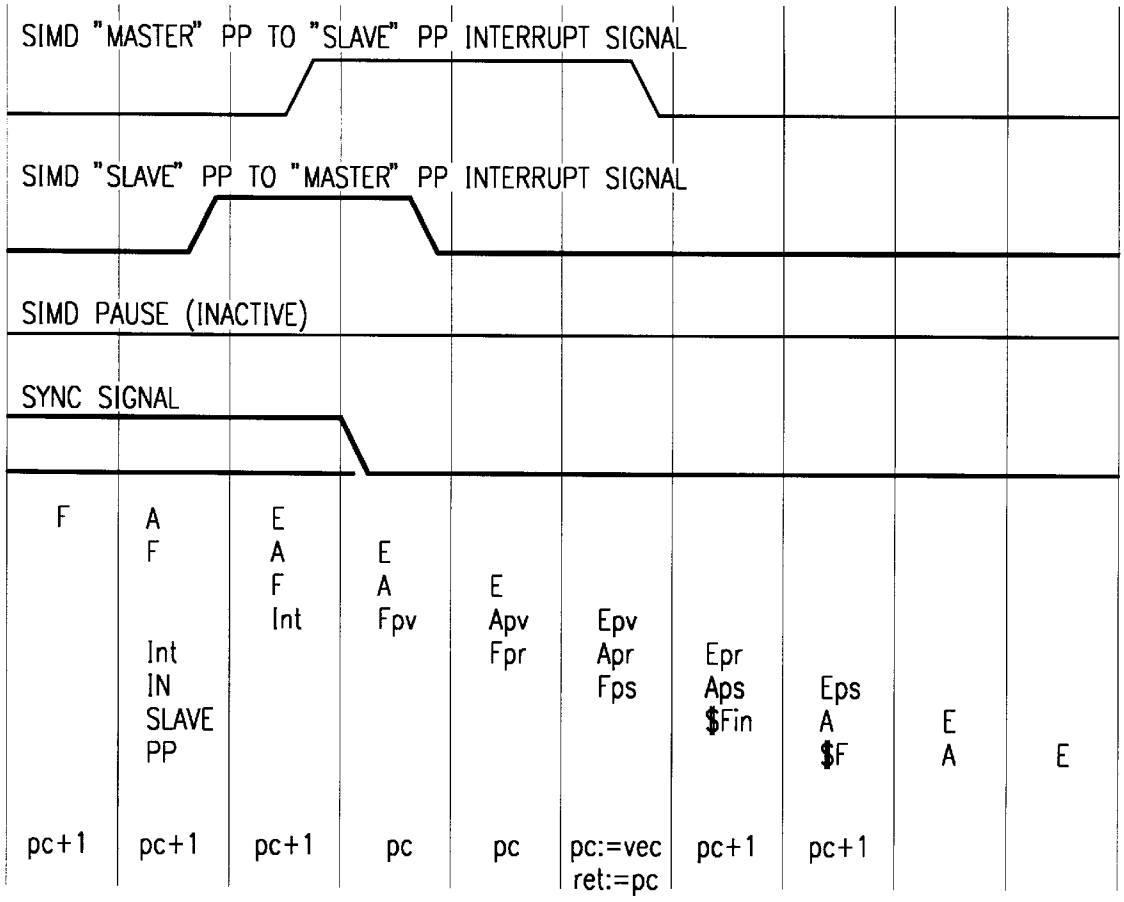


Int - INTERRUPT OCCURS.
Fpv - PSEUDO INSTRUCTION. (PC TO RET. VECTOR FETCH INTO PC).
Apv - CALCULATE INTERRUPT VECTOR ADDRESS.
Epv - COPY PC TO RET. FETCH INTERRUPT VECTOR INTO PC.
Fpr - PSEUDO INSTRUCTION. (PUSH RET).
Apr - CALCULATE STACK PUSH ADDRESS.
Epr - PUSH RET ONTO STACK.
Fps - PSEUDO INSTRUCTION. (PUSH SR).
Aps - CALCULATE STACK PUSH ADDRESS.
Eps - PUSH SR ONTO STACK. CLEAR S, I AND CLD BITS IN SR.
Fin - FIRST INSTRUCTION OF INTERRUPT ROUTINE.
$ - SYNC, INTERRUPTS AND LOOPING DISABLED UNTIL AFTER SR HAS BEEN PUSHED. NEITHER OF FIRST TWO INSTRUCTIONS OF INTERRUPT ROUTINE MAY BE A LCK.

*FIG. 39*

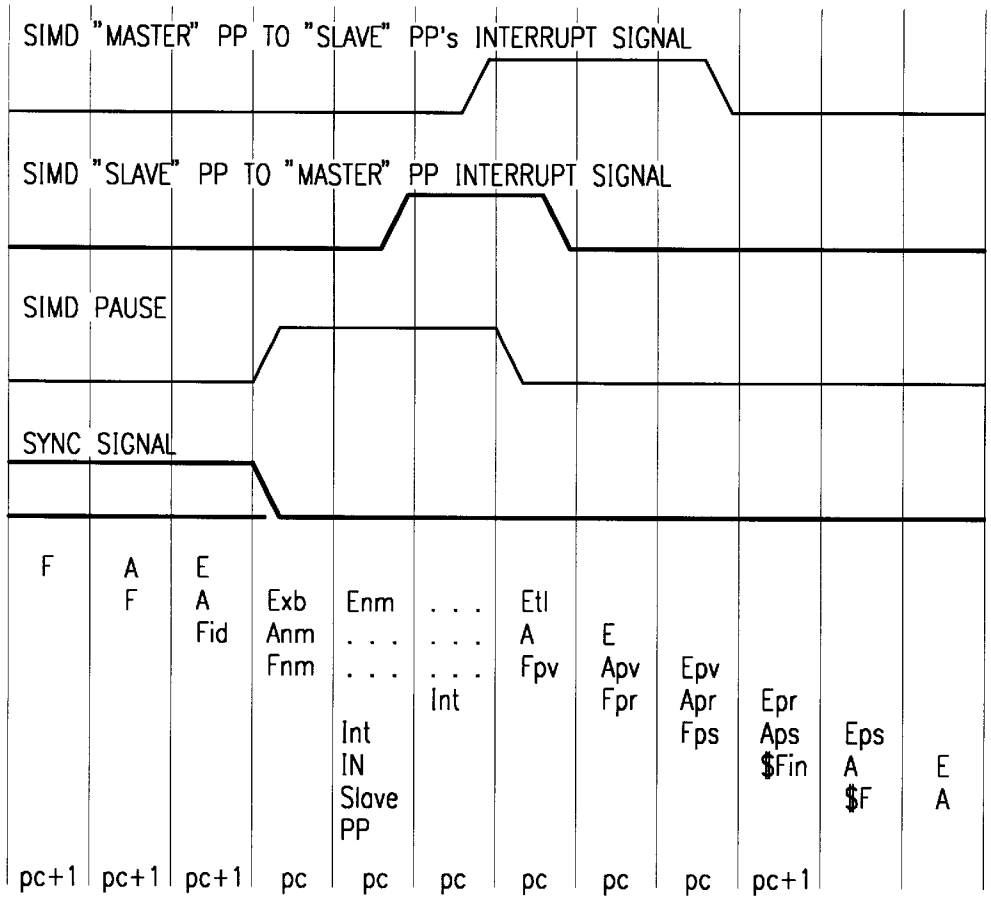


Fid – IDLE INSTRUCTION FETCHED.
Fnm – NO MASTER PHASE ON INSTRUCTION FETCH. PIPELINE NOT LOADED.
Anm – NO MASTER PHASE ON INSTRUCTION FETCH. ADDRESS REGISTERS NOT MODIFIED.
Exb – CROSSBAR ACCESS(ES) OCCUR. STORES COMPLETE TO MEMORY. LOADS COMPLETE INTO TEMPORARY LATCHES. MASTER PHASE OF DATA UNIT OPERATIONS KILLED.
Enm – NO MASTER PHASE IN DATA UNIT.
Int – INTERRUPT OCCURS.
EtL – TEMPORARY LATCH DATA (LOADS) COMPLETE INTO DESTINATION REGISTER(S). DATA UNIT PERFORMS ITS ALU/MPY OPERATIONS.
Fpv – PSEUDO INSTRUCTION. (PC TO RET. VECTOR FETCH INTO PC).
Apv – CALCULATE INTERRUPT VECTOR ADDRESS.
Epv – COPY PC TO RET. FETCH INTERRUPT VECTOR INTO PC.
Fpr – PSEUDO INSTRUCTION. (PUSH RET).
Apr – CALCULATE STACK PUSH ADDRESS.
Epr – PUSH RET ONTO STACK.
Fps – PSEUDO INSTRUCTION. (PUSH SR).
Aps – CALCULATE STACK PUSH ADDRESS.
Eps – PUSH SR ONTO STACK. CLEAR S, I AND CLD BITS IN SR.
Fin – FIRST INSTRUCTION OF INTERRUPT ROUTINE.
$ – SYNC, INTERRUPTS AND LOOPING DISABLED UNTIL AFTER SR HAS BEEN PUSHED. NEITHER OF FIRST TWO INSTRUCTIONS OF INTERRUPT ROUTINE MAY BE A LCK.

*FIG. 40*

*FIG. 41*

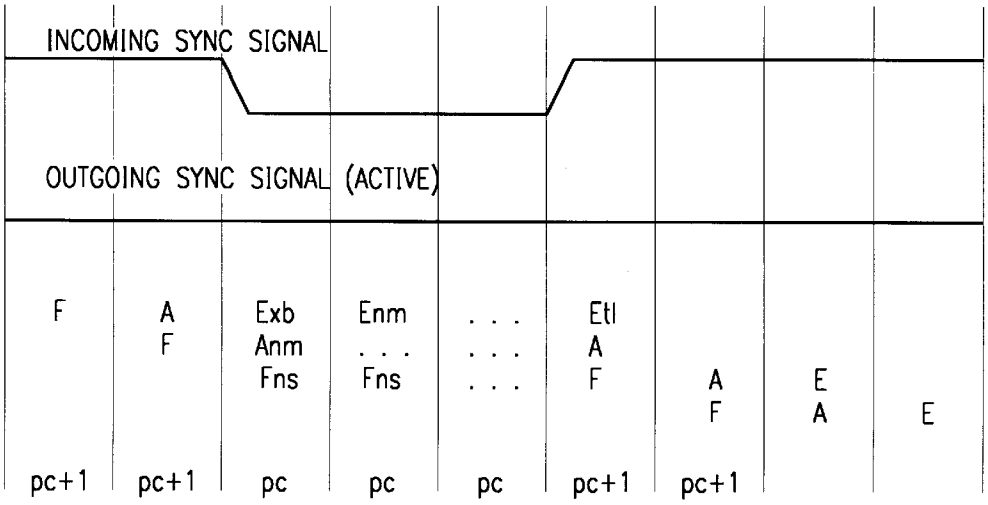


Fns – NO SYNC CONDITION. PIPE NOT LOADED. PC UNALTERED.
Anm – NO MASTER PHASE IN ADDRESS UNIT. ADDRESS REGISTERS NOT MODIFIED.
Exb – CROSSBAR ACCESS(ES) OCCUR. STORES COMPLETE TO MEMORY. LOADS COMPLETE INTO TEMPORARY LATCHES. MASTER PHASE OF DATA UNIT OPERATIONS KILLED.
Enm – NO MASTER PHASE IN DATA UNIT.
EtL – TEMPORARY LATCH DATA (LOADS) COMPLETE INTO DESIGNATION REGISTER(S). DATA UNIT PERFORMS ITS ALU/MPY OPERATIONS.

LOADS: (ASSUMING NO SIGN-EXTENSION)

*FIG. 42*

| SOURCE DATA: | | BYTE NO. 3 2 1 0 | |
|---|---|---|---|
| | | – – – – | |
| 0000h | = | D C B A | (MEMORY) |
| 0004h | = | H G F E | |
| DESTINATION | = | ? ? ? ? | (REGISTER) |

| OP. | ADD. | 16-BIT LOADS... | REG VALUE | OP. | ADD. | 32-BIT LOADS... | REG VALUE |
|---|---|---|---|---|---|---|---|
| LD | 0000h | 0 0 B A | 0 0 B A | LD | 0000h | D C B A | D C B A |
| LDU | 0002h | – – – – | 0 0 B A | LDU | 0004h | – – – – | D C B A |
| LD | 0001h | – – – B | ? ? ? B | LD | 0001h | – D C B | ? D C B |
| LDU | 0003h | 0 0 C – | 0 0 C B | LDU | 0005h | E – – – | E D C B |
| LD | 0002h | 0 0 D C | 0 0 D C | LD | 0002h | – – D C | ? ? D C |
| LDU | 0004h | – – – – | 0 0 D C | LDU | 0006h | F E – – | F E D C |
| LD | 0003h | – – – D | ? ? ? D | LD | 0003h | – – – D | ? ? ? D |
| LDU | 0005h | 0 0 E – | 0 0 E D | LDU | 0007h | G F E – | G F E D |

STORES:

SOURCE DATA: = D C B A (REGISTER)

BYTE NO.
DESTINATION DATA: = 3 2 1 0
- - - -
0000h = ? ? ? ? (MEMORY)
0004h = ? ? ? ?

| OP. | ADD. | 16-BIT STORES... | 0000h<br>0004h | OP. | ADD. | 32-BIT STORES... | REG VALUE |
|---|---|---|---|---|---|---|---|
| ST | 0000h | 0 0 B A | ? ? B A<br>? ? ? ? | ST | 0000h | D C B A | D C B A<br>? ? ? ? |
| STU | 0002h | - - - - | ? ? B A<br>? ? ? ? | STU | 0004h | - - - - | D C B A<br>? ? ? ? |
| ST | 0001h | - - A - | ? ? A ?<br>? ? ? ? | ST | 0001h | C B A - | C B A ?<br>? ? ? ? |
| STU | 0003h | - B - - | ? B A ?<br>? ? ? ? | STU | 0005h | - - - D | C B A ?<br>? ? ? D |
| ST | 0002h | - A - - | ? A ? ?<br>? ? ? ? | ST | 0002h | B A - - | B A ? ?<br>? ? ? ? |
| STU | 0004h | B - - - | B A ? ?<br>? ? ? ? | STU | 0006h | - - D C | B A ? ?<br>? ? D C |
| ST | 0003h | A - - - | A ? ? ?<br>? ? ? ? | ST | 0003h | A - - - | A ? ? ?<br>? ? ? ? |
| STU | 0005h | - - - B | A ? ? ?<br>? ? ? B | STU | 0007h | - D C B | A ? ? ?<br>? D C B |

*FIG. 43*

**ADD WITH SATURATE**

```
ADDM    D0, D1, D2
MRGM    D2, D3, D2

  D0 = 89 23 CD 67
 +D1 = 01 AB 45 EF
 ------------------
 D2: = 8A CE 12 56
MFLAGS: = ?? ?? ?? ?3

  D2 = 8A CE 12 56
  D3 = FF FF FF FF
 ------------------
 D2: = 8A CE FF FF
```

**MAXIMUM**

```
SUBM    D0, D1, D2
MRGM    D0, D1, D2

  D0 = 89 23 CD 67
 -D1 = 01 AB 45 EF
 ------------------
 D2: = 88 67 88 67
MFLAGS: = ?? ?? ?? ?5

  D0 = 89 23 CD 67
  D1 = 01 AB 45 EF
 ------------------
 D2: = 89 AB CD EF
```

**TRANSPARENCY**

```
CMPM    D0, D1
MRGM    D0, D2, D3

  D0 = 89 23 CD 67
(-)D1 = 23 23 23 23
 ------------------
 (= 66 00 8A 44)
MFLAGS: = ?? ?? ?? ?4

  D0 = 89 23 CD 67
  D2 = 87 65 43 21
 ------------------
 D3: = 89 65 CD 67
```

**COLOUR EXPANSION**

```
   LD   *A0, MFLAGS
MRGM    D0, D1, D2

MFLAGS = XX XX XX X6

  D0 = 11 11 11 11
  D1 = 88 88 88 88
 ------------------
 D2: = 11 88 88 11
```

**COLOUR COMPRESSION**

```
CMPM    D0, D1, D2

  D0 = 89 23 CD 67
(-)D1 = 89 89 89 89
 ------------------
 (= 00 89 44 CD)
MFLAGS = ?? ?? ?? ?8
```

**GUIDED COPY**

```
   LD   *A0, MFLAGS
MRGM    D0, D1, D1

MFLAGS = XX XX XX XC

  D0 = 89 23 CD 67
  D1 = 87 65 43 21
 ------------------
 D1: = 87 65 CD 67
```

*FIG. 44*

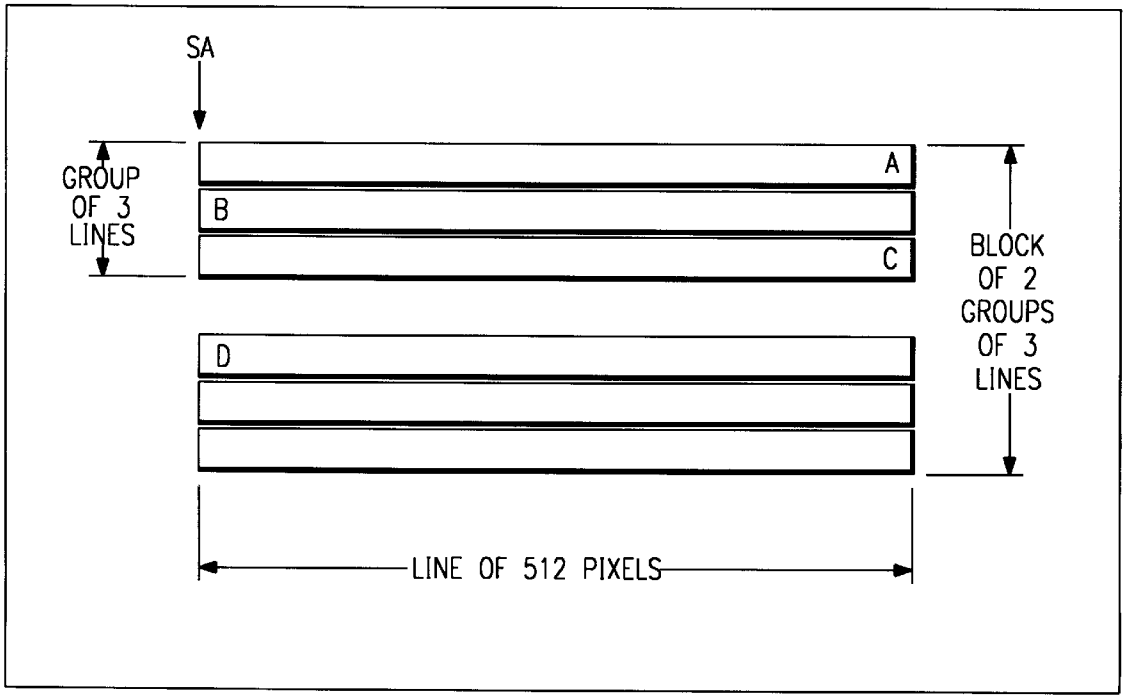


*FIG. 45*

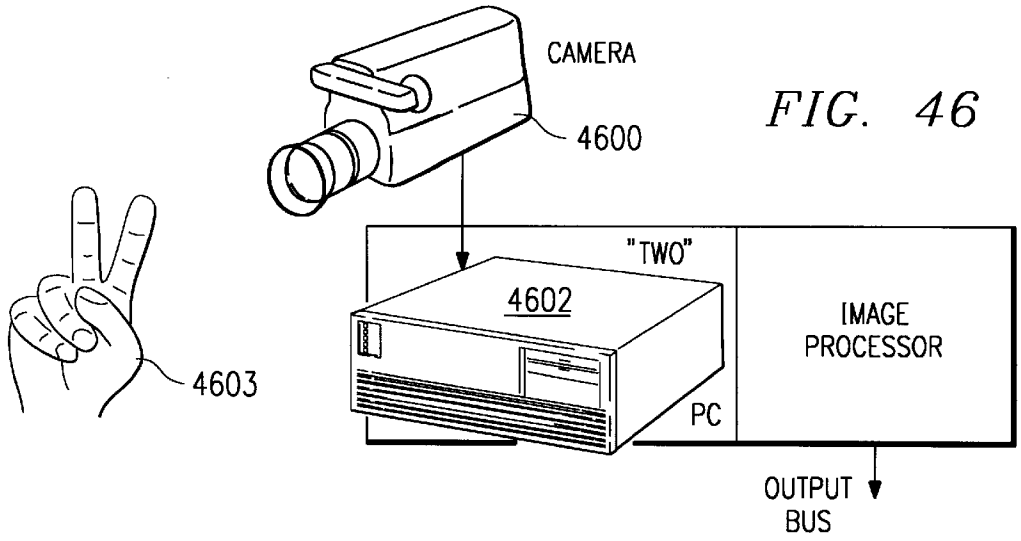


FIG. 46

FIG. 47

| | | | CONTROL CODE | |
|---|---|---|---|---|
| 0 | 0 | 0 | 1 | 0 |

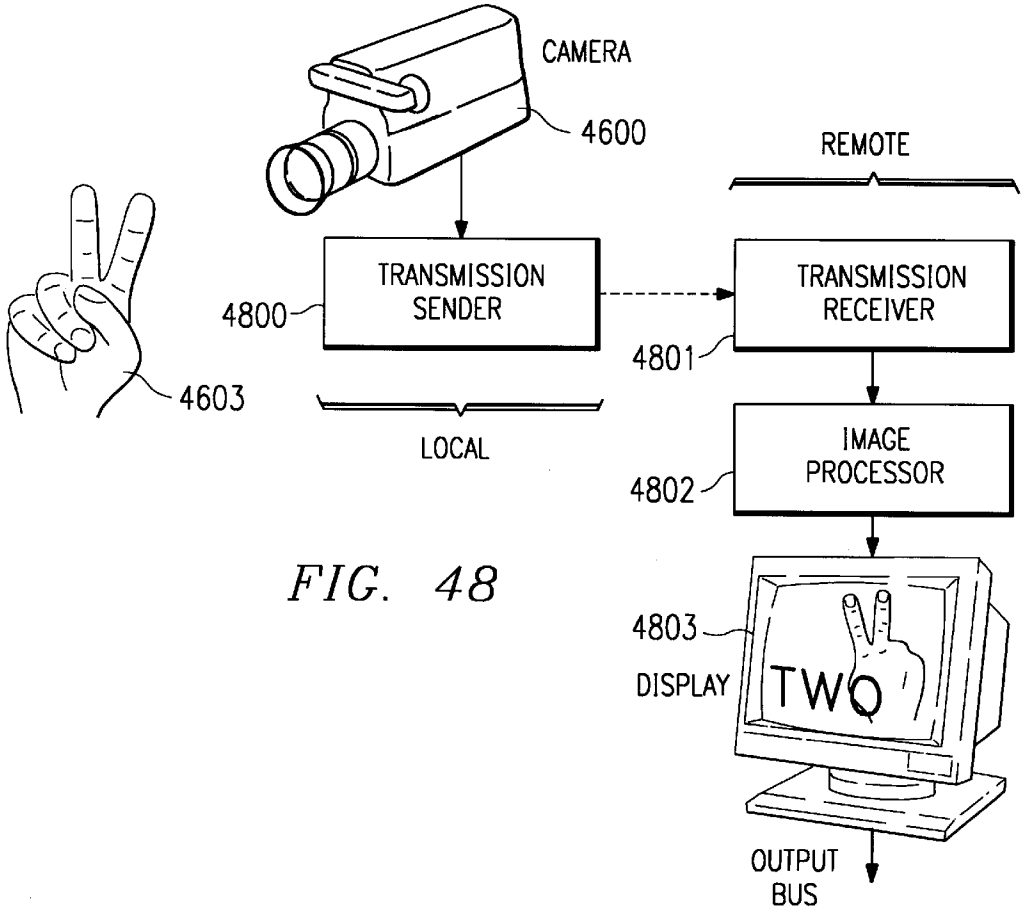


FIG. 48

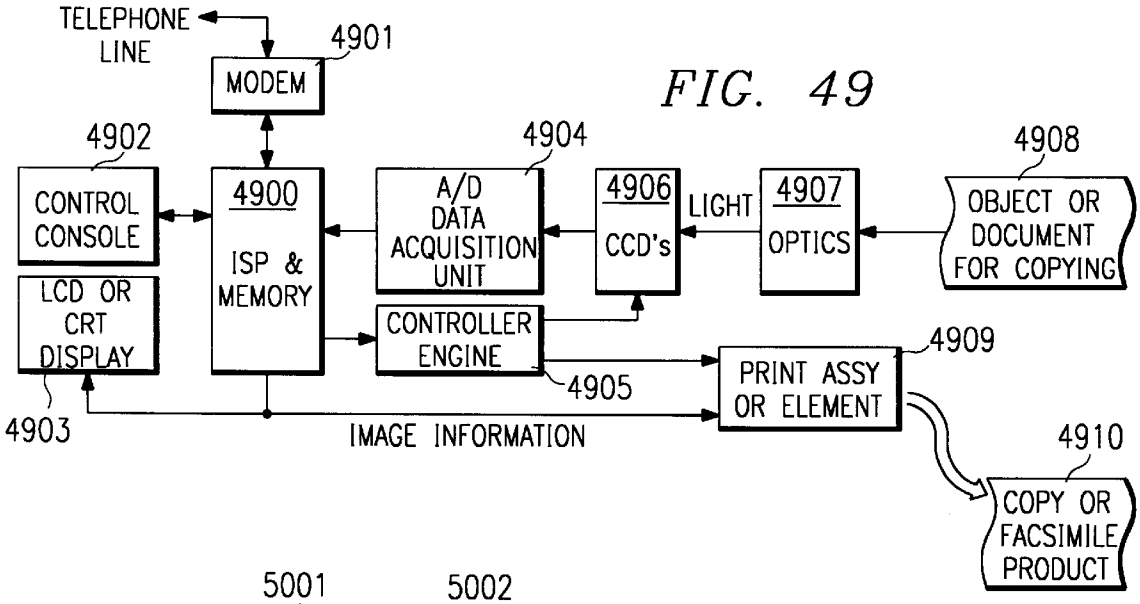


FIG. 49

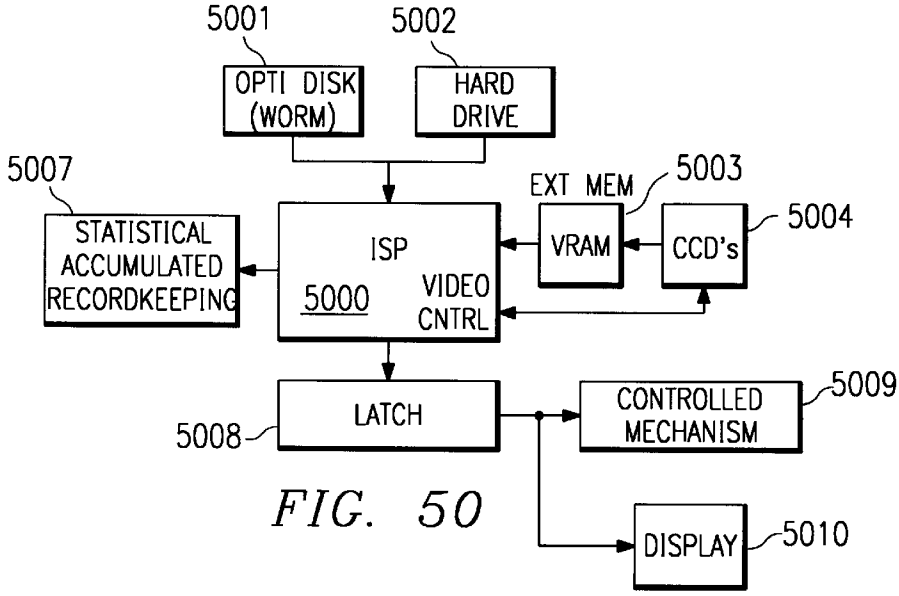


FIG. 50

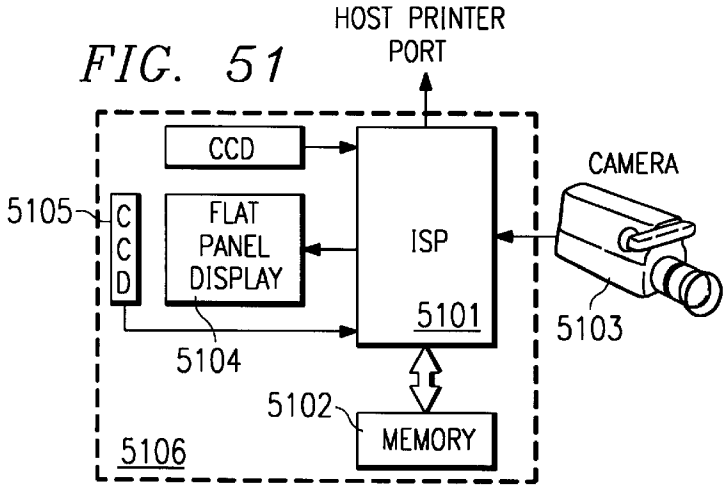


FIG. 51

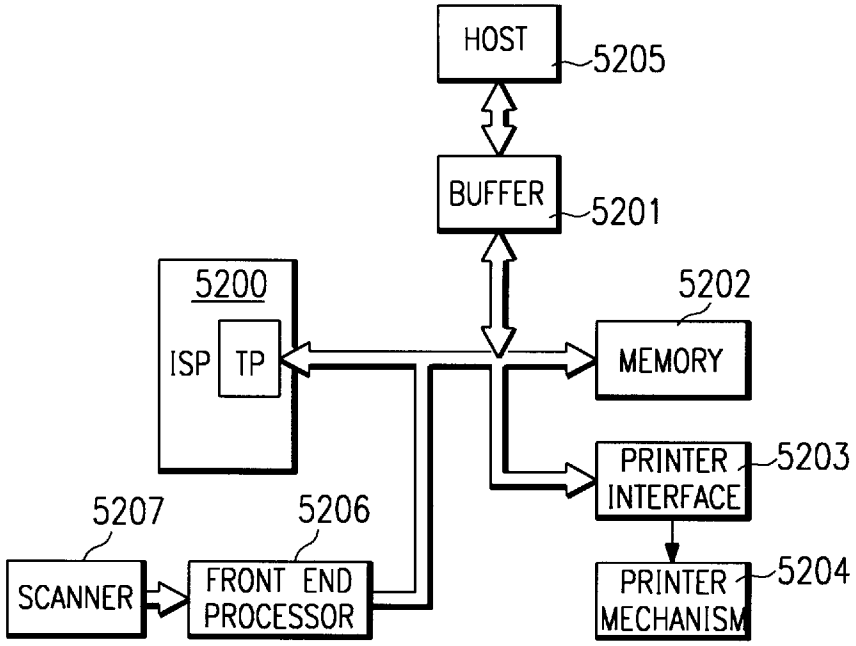
HOST
5205
BUFFER
5201
5200
ISP
TP
5202
MEMORY
PRINTER INTERFACE
5203
5207
5206
SCANNER
FRONT END PROCESSOR
PRINTER MECHANISM
5204

FIG. 52

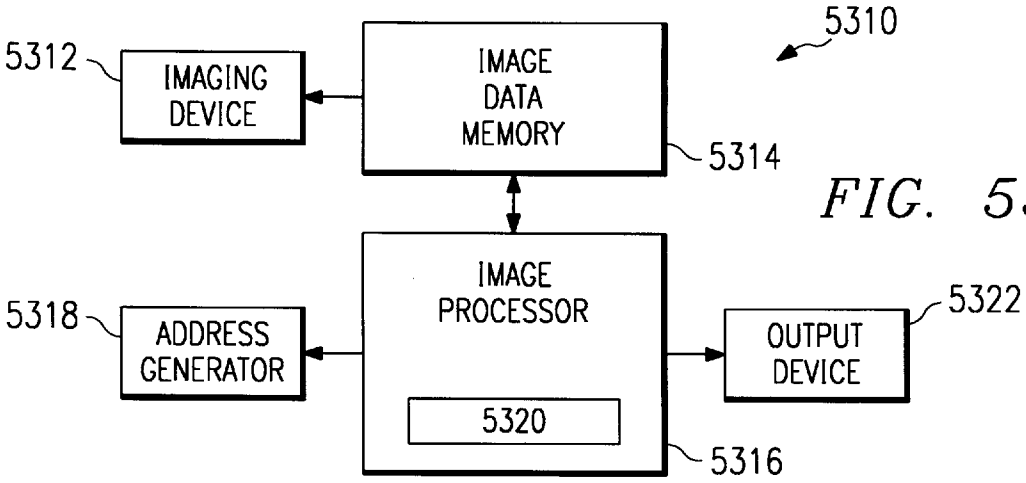
5310
5312
IMAGING DEVICE
IMAGE DATA MEMORY
5314
IMAGE PROCESSOR
5318
ADDRESS GENERATOR
5320
OUTPUT DEVICE
5322
5316

FIG. 53

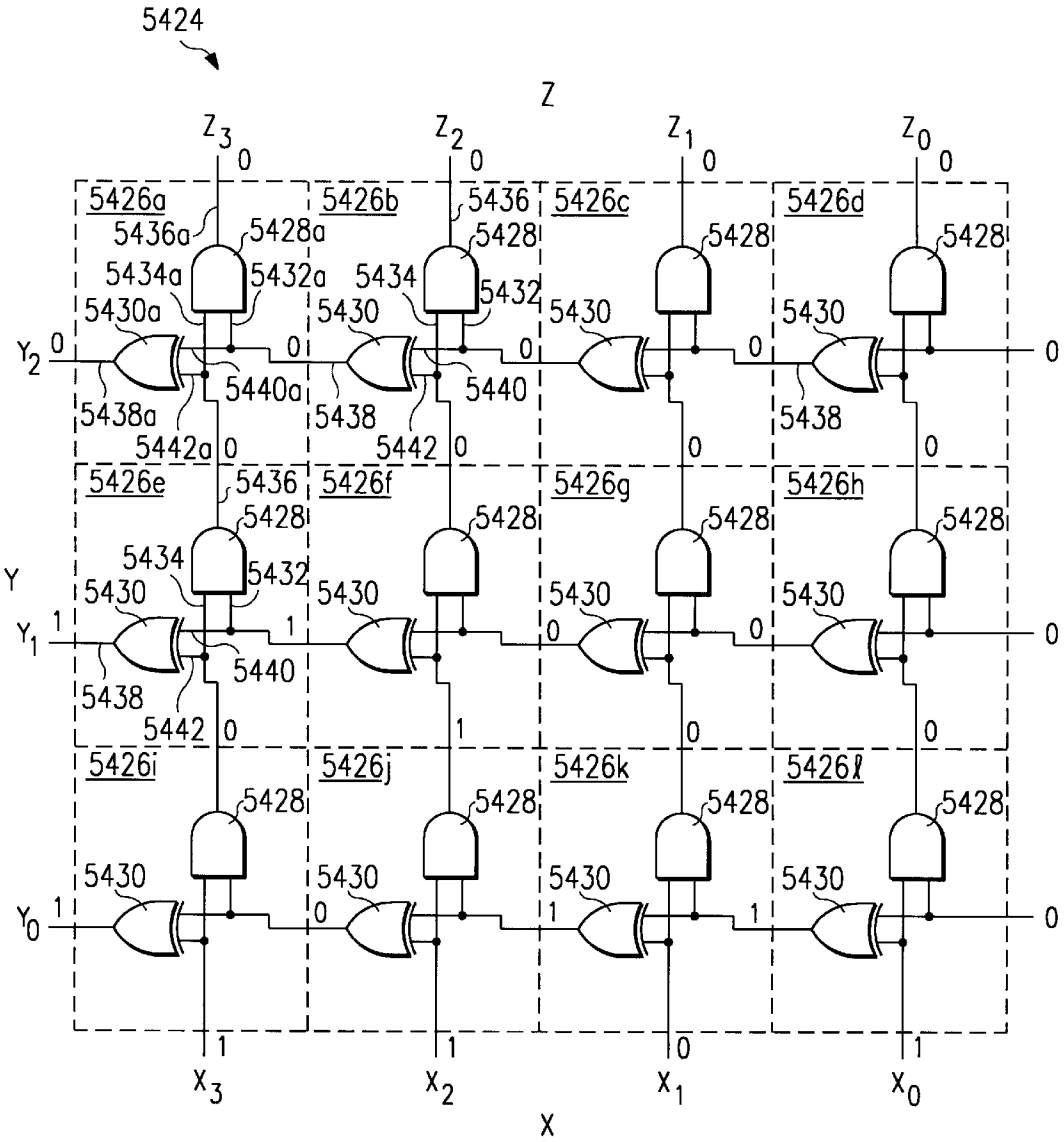
5424
Z
Z3
Z2
Z1
Z0
5426a
5426b
5426c
5426d
5426e
5426f
5426g
5426h
5426i
5426j
5426k
5426l
5436a
5428a
5434a
5432a
5430a
5438a
5440a
5442a
5436
5428
5434
5432
5430
5438
5440
5442
Y
Y2
Y1
Y0
X3
X2
X1
X0
X

FIG. 54

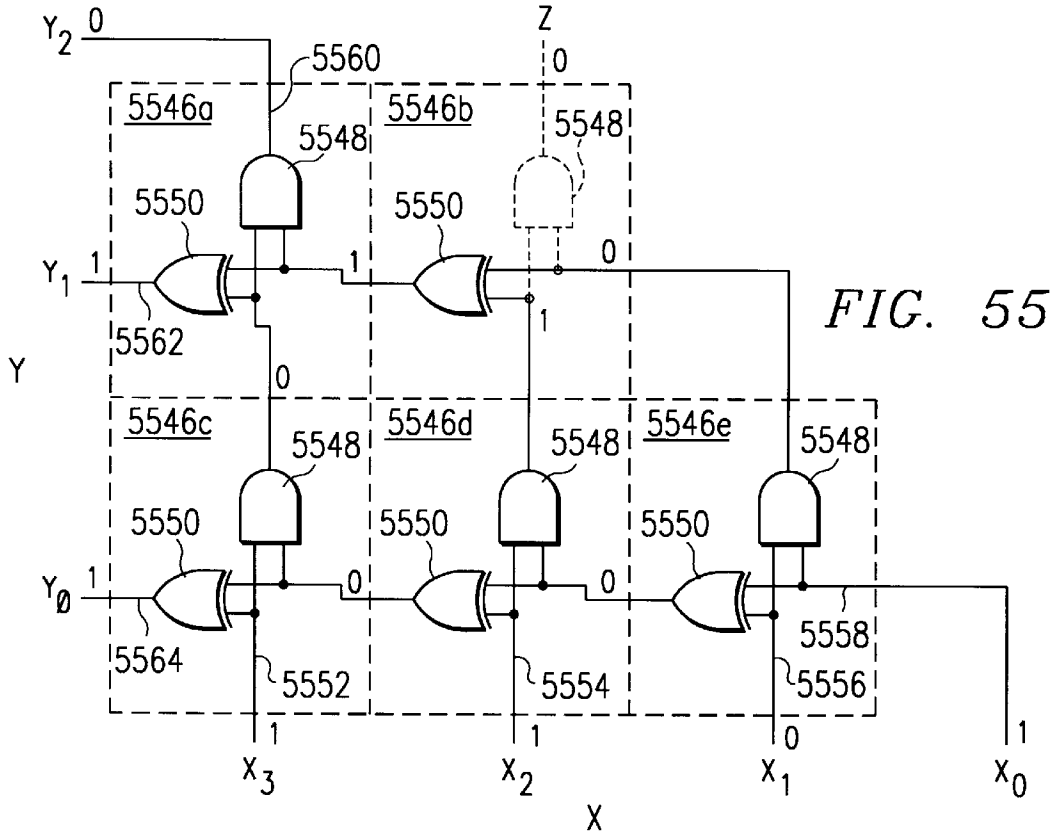
Y2
0
Z
0
5560
5546a
5546b
5548
5548
5550
5550
Y1
1
1
0
1
5562
Y
0
5546c
5546d
5546e
5548
5548
5548
5550
5550
5550
Y0
1
0
0
5564
5552
5554
5558
5556
1
1
0
1
X3
X2
X1
X0
X

FIG. 55

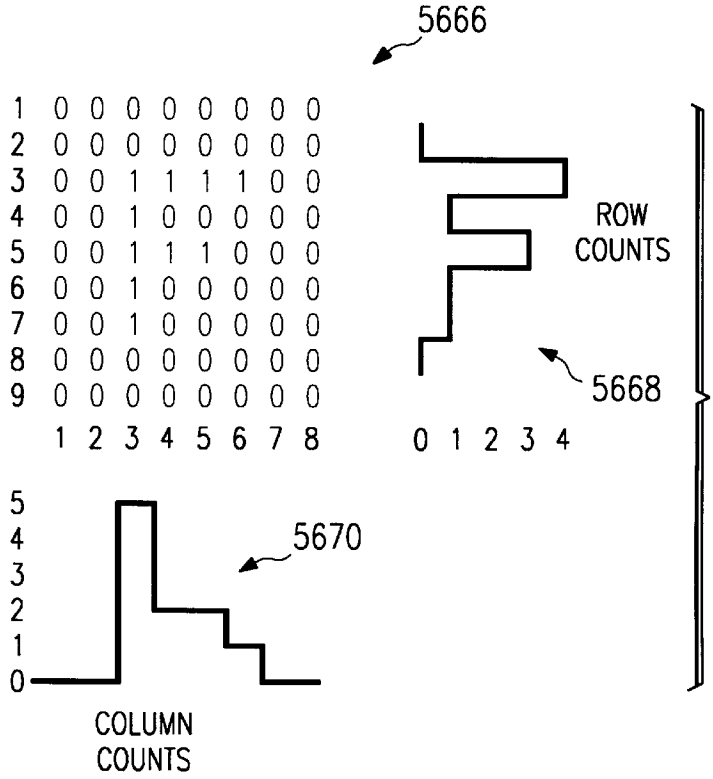
5666
1 0 0 0 0 0 0 0 0
2 0 0 0 0 0 0 0 0
3 0 0 1 1 1 1 0 0
4 0 0 1 0 0 0 0 0
5 0 0 1 1 1 0 0 0
6 0 0 1 0 0 0 0 0
7 0 0 1 0 0 0 0 0
8 0 0 0 0 0 0 0 0
9 0 0 0 0 0 0 0 0
1 2 3 4 5 6 7 8
ROW COUNTS
5668
0 1 2 3 4
5
4
3
2
1
0
5670
COLUMN COUNTS

FIG. 56

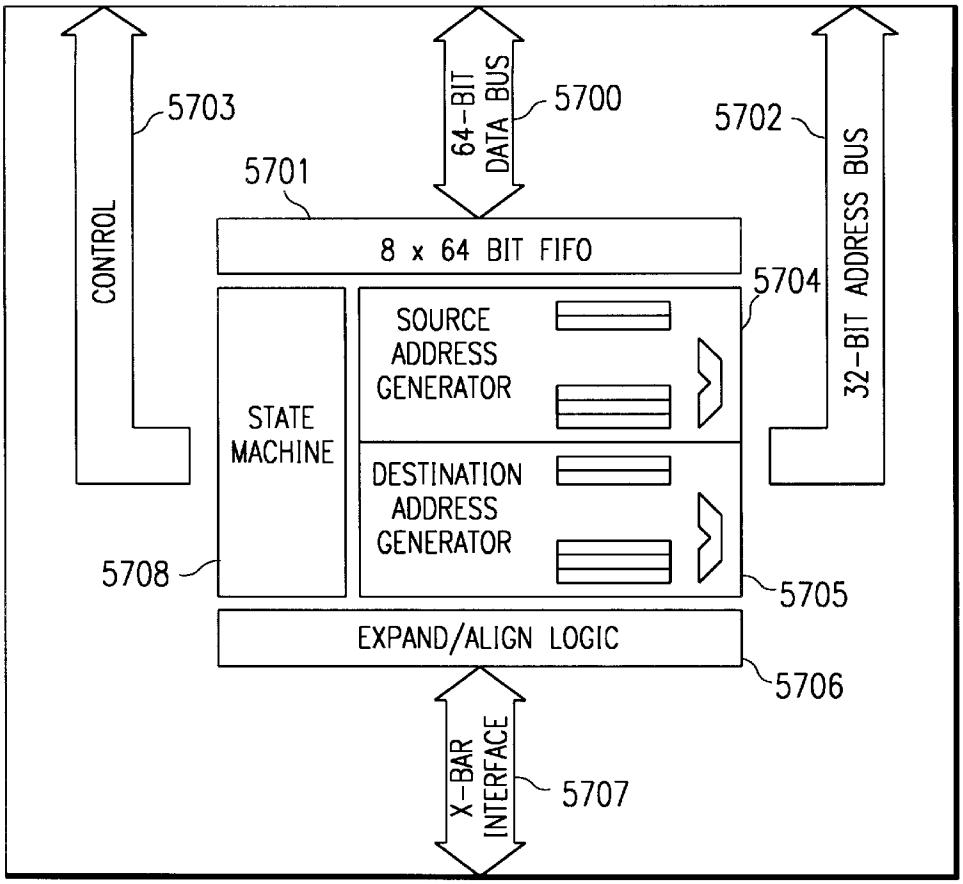
CONTROL
5703
64-BIT DATA BUS
5700
5702
32-BIT ADDRESS BUS
5701
8 x 64 BIT FIFO
5704
STATE MACHINE
SOURCE ADDRESS GENERATOR
DESTINATION ADDRESS GENERATOR
5708
5705
EXPAND/ALIGN LOGIC
5706
X-BAR INTERFACE
5707

FIG. 57

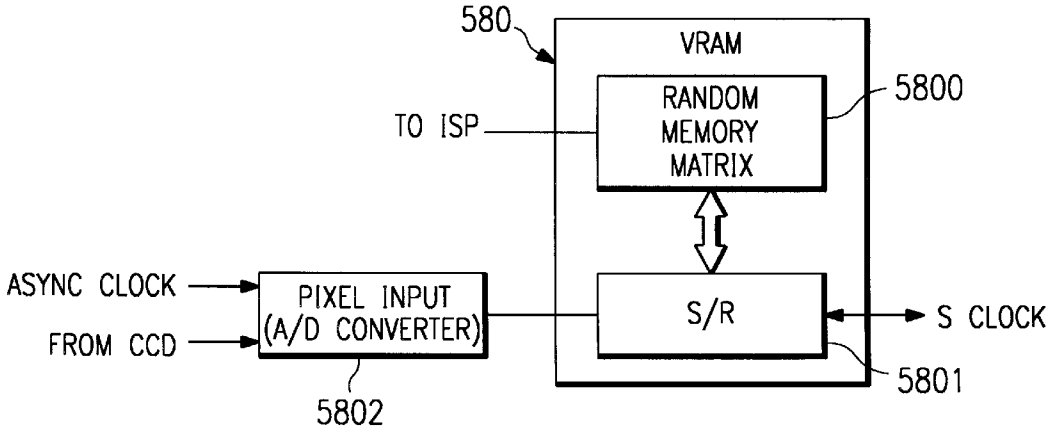
580
VRAM
5800
TO ISP
RANDOM MEMORY MATRIX
ASYNC CLOCK
FROM CCD
PIXEL INPUT (A/D CONVERTER)
S/R
S CLOCK
5801
5802

FIG. 58

FIG. 59
(PRIOR ART)

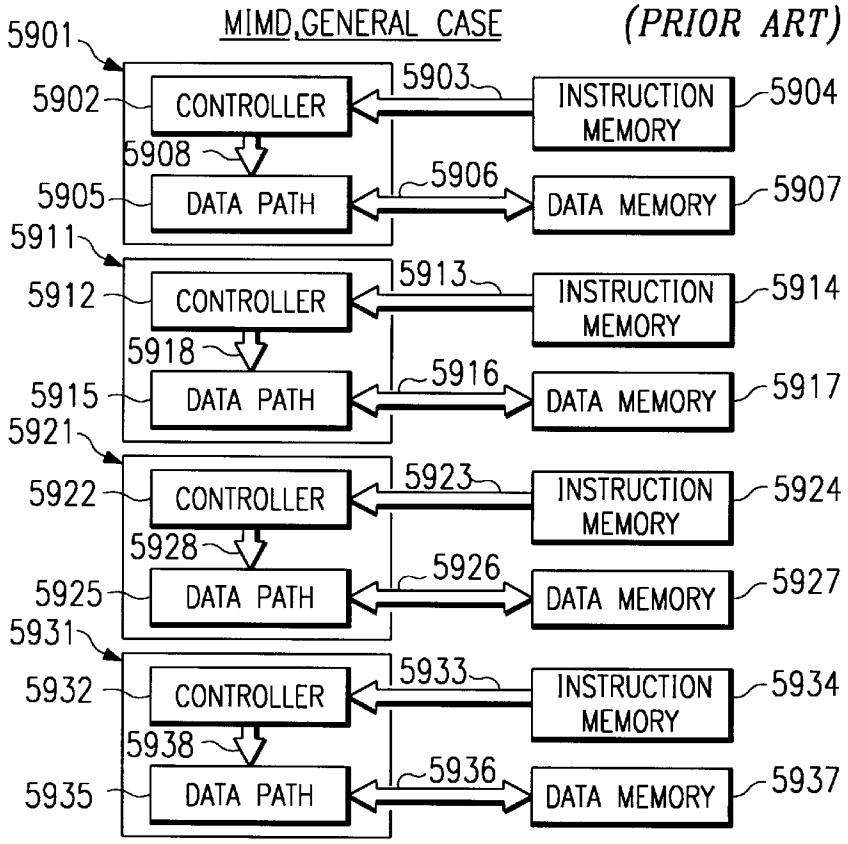


FIG. 60
(PRIOR ART)

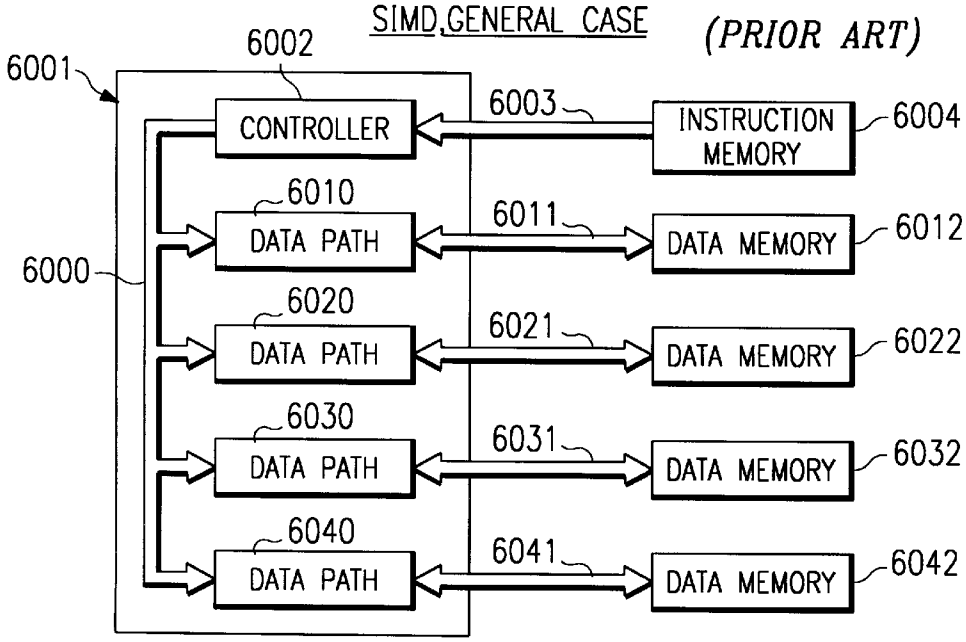

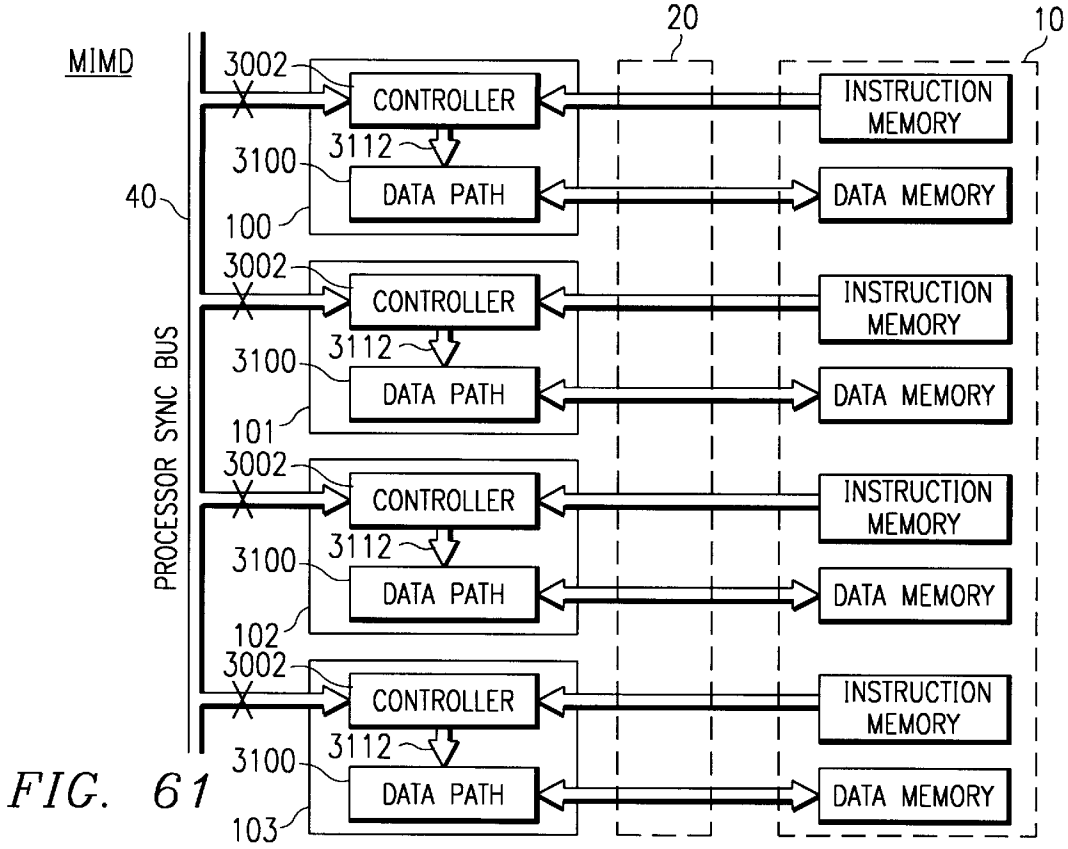
MIMD
20
10
3002
CONTROLLER
INSTRUCTION MEMORY
3112
3100
DATA PATH
DATA MEMORY
40
100
101
102
103
PROCESSOR SYNC BUS

FIG. 61

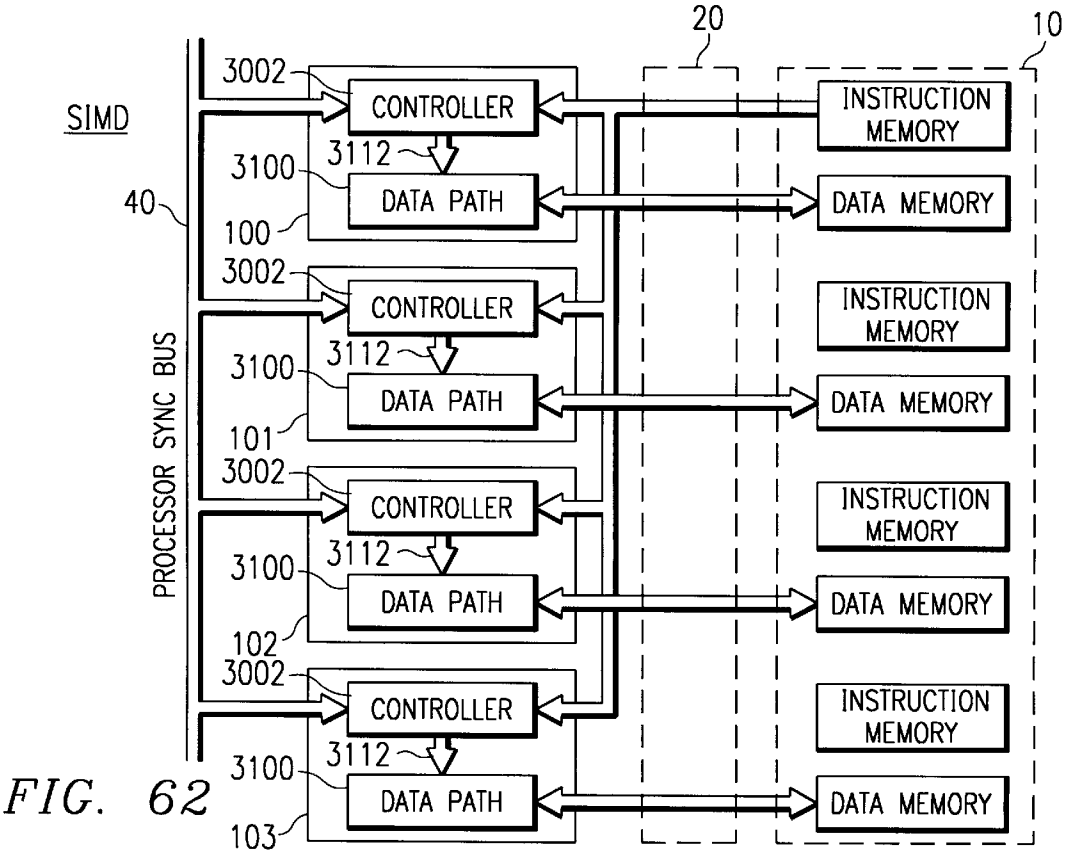
SIMD
20
10
3002
CONTROLLER
INSTRUCTION MEMORY
3112
3100
DATA PATH
DATA MEMORY
40
100
101
102
103
PROCESSOR SYNC BUS

FIG. 62

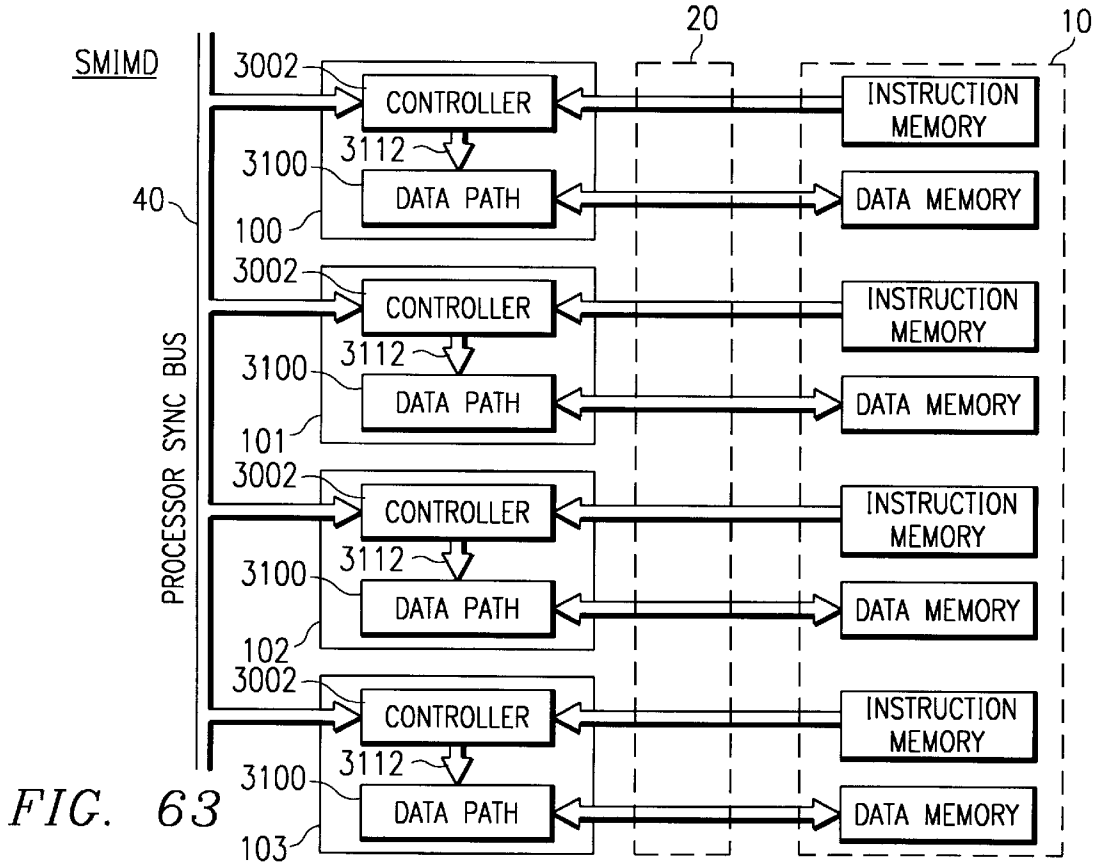
SMIMD
20
10
3002
CONTROLLER
INSTRUCTION MEMORY
3112
3100
DATA PATH
DATA MEMORY
40
100
101
102
103
PROCESSOR SYNC BUS

FIG. 63

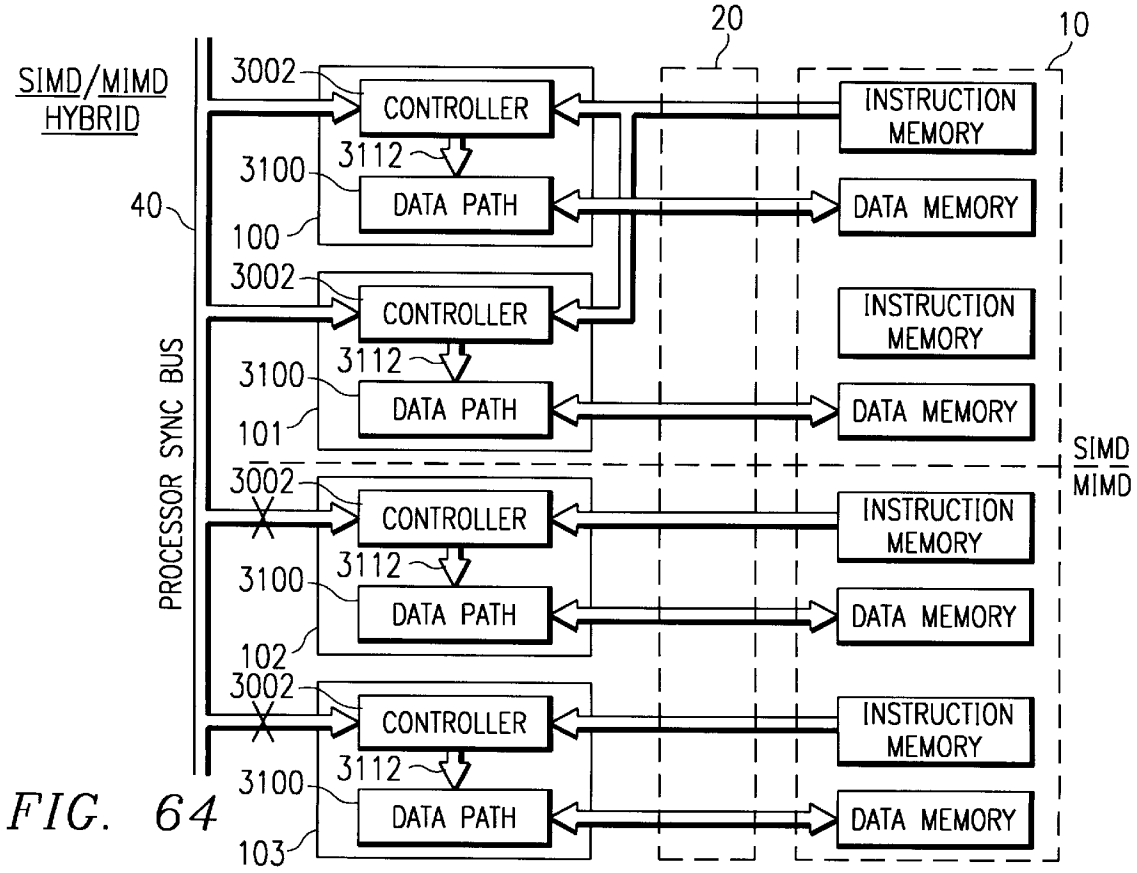
SIMD/MIMD HYBRID
20
10
3002
CONTROLLER
INSTRUCTION MEMORY
3112
3100
DATA PATH
DATA MEMORY
40
100
101
102
103
PROCESSOR SYNC BUS
SIMD
MIMD

FIG. 64

# SYNCHRONIZED MIMD MULTI-PROCESSING SYSTEM AND METHOD INHIBITING INSTRUCTION FETCH AT OTHER PROCESSORS ON WRITE TO PROGRAM COUNTER OF ONE PROCESSOR

This application is: a divisional of U.S. patent application Ser. No. 08/485,305 filed Jun. 7, 1995, now U.S. Pat. No. 5,809,288; which is a continuation of U.S. patent application Ser. No. 08/032,530 filed Mar. 15, 1993; which is a continuation of U.S. patent application Ser. No. 07/437,853 filed Nov. 17, 1989, now abandoned.

## TECHNICAL FIELD OF THE INVENTION

This invention relates generally to multi-processor systems and more particularly to such systems where the several processors are synchronized on a cycle-by-cycle basis.

## CROSS REFERENCE TO RELATED APPLICATIONS

All of the following patent applications are cross-referenced to one another, and all have been assigned to Texas Instruments Incorporated. These applications have been concurrently filed and are hereby incorporated in this patent application by reference.

U.S. patent application Ser. No. 08/263,504 filed Jun. 21, 1994, now U.S. Pat. No. 5,471,592 issued Nov. 28, 1995 and entitled MULTI-PROCESSOR WITH CROSSBAR LINK OF PROCESSORS AND MEMORIES AND METHOD OF OPERATION; which is a continuation of U.S. patent application Ser. No. 08/135,754 filed Oct. 12, 1993, now abandoned; which is a continuation of U.S. patent application Ser. No. 07/933,865 filed Aug. 21, 1992, now abandoned; which is a continuation of U.S. patent application Ser. No. 07/435,591 filed Nov. 17, 1989, now abandoned.

U.S. patent application Ser. No. 07/437,858 filed Nov. 17, 1989, now U.S. Pat. No. 5,212,777 issued May 18, 1993 and entitled MULTI-PROCESSOR RECONFIGURABLE IN SINGLE INSTRUCTION MULTIPLE DATA (SIMD) AND MULTIPLE INSTRUCTION MULTIPLE DATA (MIMD) MODES AND METHOD OF OPERATION.

U.S. patent application Ser. No. 08/264,111 filed Jun. 22, 1994, now U.S. Pat. No. 5,522,083 issued May 28, 1996 and entitled RECONFIGURABLE MULTI-PROCESSOR OPERATING IN SIMD MODE WITH ONE PROCESSOR FETCHING INSTRUCTIONS FOR USE BY REMAINING PROCESSORS; which is a continuation of U.S. patent application Ser. No. 07/895,565 filed Jun. 5, 1992, now abandoned; which is a continuation of U.S. patent application Ser. No. 07/437,856 filed Nov. 17, 1989, now abandoned.

U.S. patent application Ser. No. 08/264,582 filed Jun. 22, 1994 now pending and entitled REDUCED AREA OF CROSSBAR AND METHOD OF OPERATION; which is a continuation of U.S. patent application Ser. No. 07/437,852 filed Nov. 17, 1989, now abandoned.

U.S. patent application Ser. No. 08/032,530 filed Mar. 15, 1993 now pending and entitled SYNCHRONIZED MIND MULTI-PROCESSING SYSTEM AND METHOD; which is a continuation of U.S. patent application Ser. No. 07/437,853 filed Nov. 17, 1989, now abandoned.

U.S. patent application Ser. No. 07/437,946 filed Nov. 17, 1989, now U.S. Pat. No. 5,197,140 issued Mar. 23, 1993 and entitled SLICED ADDRESSING MULTI-PROCESSOR AND METHOD OF OPERATION.



U.S. patent application Ser. No. 07/437,857 filed Nov. 17, 1989, now U.S. Pat. No. 5,339,447 issued Aug. 16, 1994 and entitled ONES COUNTING CIRCUIT, UTILIZING A MATRIX OF INTERCONNECTED HALF-ADDERS, FOR COUNTING THE NUMBER OF ONES IN A BINARY STRING OF IMAGE DATA.

U.S. patent application Ser. No. 07/437,851 filed Nov. 17, 1989, now U.S. Pat. No. 5,239,654 issued Aug. 24, 1993 and entitled DUAL MODE SIMD/MIMD PROCESSOR PROVIDING REUSE OF MIMD INSTRUCTION MEMORIES AS DATA MEMORIES WHEN OPERATING IN SIMD MODE.

U.S. patent application Ser. No. 07/911,562 filed Jun. 29, 1992, now U.S. Pat. No. 5,410,649 issued Apr. 25, 1995 and entitled IMAGING COMPUTER AND METHOD OF OPERATION; which is a continuation of U.S. patent application Ser. No. 07/437,854 filed Nov. 17, 1989, now abandoned.

U.S. patent application Ser. No. 07/437,875 filed Nov. 17, 1989, now U.S. Pat. No. 5,226,125 issued Jul. 6, 1993 and entitled SWITCH MATRIX HAVING INTEGRATED CROSSPOINT LOGIC AND METHOD OF OPERATION.

## BACKGROUND OF THE INVENTION

In the world of computers and processors there is an unrelenting drive for additional computing power and faster calculation times. In this context, then, systems in which several processors can be combined to work in parallel with one another are necessary.

Imaging systems which obtain visual images and perform various manipulations with respect to the data and then control the display of the imaged and stored data inherently require large amounts of computations and memory. Such imaging systems are prime candidates for multi-processing where different processors perform different tasks concurrently in parallel. These processors can be working together in the single instruction, multiple data mode (SIMD) where all of the processors are operating from the same instruction stream but obtaining data from various sources. Or the processors can be working together in the multiple instruction, multiple data mode (MIMD) where each processor is working from a different set of instructions and working on data from different sources. For different operations, different configurations are necessary.

When several of the parallel processors are working on a common task there is usually the need to communicate between processors. In some situations the processors can achieve this communication by passing messages one to another. In other situations semaphore signals must be passed for control purposes. However, there are situations where cycle by cycle synchronization is necessary and in these situations it is time consuming to pass messages and to rely on semaphore signaling.

To compound the problem even further, the various individual processors may be working in conjunction with a first set of processors at one period of time and with a different set of processors at a different time. Any system then that establishes synchronized control must do so in a flexible quickly changing manner.

In situations where several processors are synchronized the implication is that they will all execute their instructions, which can be different for each processor, in lock step with each other. However, since the instructions for each processor may require more or less time to execute, or may be subject to unanticipated interrupts (such as, for example, a faulty memory transfer) some mechanism must be in place

to pace the processors if synchronism is to be maintained under all conditions.

There is thus a need in the art for a system which handles multi-processors such that any of the processors can be synchronized with any one or more other processors for a variable amount of time all without interchanging messages or semaphore signals and regardless of the execution time of any one or more instructions.

One method of solving the huge interconnection problem in complex systems, such as the image processing system shown in one embodiment of the invention, is to construct the entire processor as a single device. Conceptually this might appear easy to achieve, but in realty the problems are complicated.

First of all, an architecture must be created which allows for the efficient movement of information while at the same time conserving precious silicon chip space. The architecture must allow a very high degree of flexibility since once fabricated, it can not easily be modified for different applications. Also, since the processing capability of the system will be high there is a need for high bandwidth in the movement of information on and off the chip. This is so since the physical number of leads which can attach to any one chip is limited.

It is also desirable to design an entire parallel processor system, such as an image processor, on a single silicon chip while maintaining the system flexible enough to satisfy wide ranging and constantly changing operational criteria.

It is further desirable to construct such a single chip parallel processor system whether the processor memory interface is easily adaptable to operation in various modes, such as SIMD and MIMD, as well as adaptable to efficient on-off chip data communications.

## SUMMARY OF THE INVENTION

These problems have been solved by designing a multi-processing system to handle image processing and graphics in a manner which allows any number of processors to run synchronously with each other. At any one time any number of processors can be grouped together for synchronization purposes, each processor running its own instruction stream.

Each processor has associated with it a register for indicating if synchronized operation is required. Also included is a register for holding the address (identity) of the other processors synchronized with that processor.

The instruction stream contains instructions which indicate the beginning and end of a series of instructions that must be executed in synchronization with the other processors.

Once the code for starting a synchronized instruction stream arrives at a processor, that processor, and all the processors in the synchronized set, can only execute instructions in lock step with each other until such time as the "end of synchronization" code arrives.

Using this approach, no messages need be transferred between processors, and the processors will remain in step for one cycle, or a number or cycles, depending upon the instruction stream being executed. No external control, other than the instruction stream, is required to establish the synchronization relationships between processors.

The problems inherent with constructing a single chip image processor having a high degree of versatility have been solved by the architecture of establishing a multi-link, multi-bus crossbar switch between the individual processors and the individual memories. This architecture, coupled with the design of the high density switch allows the system to perform in both the SIMD and MIMD modes and allows for full access of all processors to all memories. The crossbar switch is constructed with different length links serving different functions so as to conserve space while still providing a high degree of operational flexibility.

In one embodiment a transfer processor operates to control on-chip/off-chip communications while a master processor serves to control communications to a common memory. In operation, any processor can access any of a number of memories, while certain memories are dedicated to handling instructions for the individual processors.

## BRIEF DESCRIPTION OF THE DRAWINGS

For a more complete understanding of the present invention and for further advantages thereof, reference is now made to the following detailed description taken in conjunction with accompanying drawings in which

FIG. **1** shows an overall view of the elements of the image processing system;

FIG. **2** shows an alternative view of the elements of the image processing system;

FIG. **3** shows a series of image processing systems interconnected together into an expanded system;

FIG. **4** shows details of the crossbar switch matrix interconnecting the parallel processors and the memories;

FIG. **5** shows a prior art parallel processor configuration using shared memories;

FIG. **6** shows a prior art parallel processor configuration using distributed memories;

FIG. **7** shows an improved configuration;

FIG. **8** shows a prior art SIMD processor configuration;

FIG. **9** shows a prior art MIMD processor configuration;

FIG. **10** shows some reconfigurable modes of operations of an improved multi-processor;

FIG. **11** is a graph showing some algorithms and control for the image processing system;

FIG. **12** shows an example of the pixel data flow in the SIMD mode;

FIG. **13** shows an example of the pixel data flow in the MIND mode using sliced addressing;

FIG. **14** shows an example of data access in the SIMD in accordance with this invention;

FIG. **15** shows an example of data access in the MIMD mode in accordance with this invention;

FIG. **16** shows the interrupt polling communication between the processors;

FIG. **17** shows a schematic representation of the layout of the processors and memory interconnected by the crossbar switch;

FIGS. **18** and **19** show details of the crosspoints of the crossbar switch;

FIG. **20** is a graph of wave forms of the contention logic for memory access;

FIG. **21** shows the relationship between the synchronization register of each processor and the synchronization bus;

FIG. **22** shows further details of the synchronization register and synchronization logic within each processor;

FIG. **23** is a graph showing the processes and waveforms for processor synchronization;

FIG. **24** shows an example of pixel data distribution using sliced addressing;

FIG. **25** shows an example of a prior art address adder;

FIG. **26** shows the address adder of this invention using sliced addressing;

FIG. **27** shows an example of the arithmetic employed in sliced addressing;

FIG. **28** shows details of the rearrangement of the instruction data memory for the SIMD/MIMD operational modes;

FIG. **29** shows details of a master processor;

FIG. **30** shows the general structure of the parallel processors;

FIG. **31** shows further detail of the structure of the program flow control unit of each parallel processor;

FIG. **32** shows further detail of the structure of the address unit of each parallel processor;

FIG. **33** shows further detail of the structure of the data unit of each parallel processor;

FIG. **34** shows the status register of each parallel processor;

FIG. **35** is a graph of waveforms of the pipeline sequence for a cache miss;

FIG. **36** is a graph of waveforms of the pipeline sequence for contention resolution;

FIG. **37** is a graph of waveforms of the pipeline sequence for loop control;

FIG. **38** is a graph of waveforms of the pipeline sequence for a branch or call instruction;

FIG. **39** is a graph of waveforms of the pipeline sequence for an interrupt;

FIG. **40** is a graph of waveforms of the pipeline sequence for an IDLE instruction;

FIG. **41** is a graph of waveforms of the pipeline sequence for a synchronized processor waiting for a synchronization signal;

FIG. **42** is an example of an nonaligned data load operation;

FIG. **43** is an example of a nonaligned data store operation;

FIG. **44** is an example of the operations that can be performed with a splittable arithmetic logic unit;

FIG. **45** is an example of a complex pixel data block that can be specified in a single packet request;

FIG. **46** shows an example of an imaging personal computer;

FIG. **47** shows the data on the output bus of the imaging personal computer of FIG. **46**;

FIG. **48** shows a further example of an imaging personal computer employing image transmission and reception;

FIG. **49** is a block diagram of an example imaging personal desk top computer;

FIG. **50** is a block diagram of an imaging computer imbedded in a application product;

FIG. **51** is a block diagram of a handheld imaging personal computer;

FIG. **52** is a block diagram of node of a network of imaging computer;

FIG. **53** is a functional block diagram of an imaging system;

FIG. **54** is a logic schematic of the ones counting circuit matrix;

FIG. **55** is a logic schematic of a minimized matrix of the ones counting circuit;

FIG. **56** is an example of an application of a ones counting circuit;

FIG. **57** shows a block diagram of the transfer processor;

FIG. **58** shows a block diagram of the parallel processor system used with a VRAM (video random access memory); and

FIG. **59** shows the organization of processors, instruction memories and data memories for the MIMD mode in the prior art;

FIG. **60** shows the organization of processors, an instruction memory and data memories for the SIMD mode in the prior art;

FIG. **61** shows the organization of processors, instruction memories and data memories for the MIMD mode of this invention;

FIG. **62** shows the organization of processors, instruction memories and data memories for the SIMD mode of this invention;

FIG. **63** shows the organization of processors, instruction memories and data memories for the synchronized MIMD mode of this invention;

FIG. **64** shows the organization of processors, instruction memories and data memories for one example of a mixed SIMD/MIMD mode of this invention.

## DETAILED DESCRIPTION OF THE INVENTION

Prior to beginning a discussion of the operation of the system, it may be helpful to understand how parallel processing systems have operated in the prior art.

FIG. **5** shows a system having parallel processors **50–53** accessing a single memory **55**. The system shown in FIG. **5** is typically called a shared memory system where all of the parallel processors **50–53** share data in and out of the same memory **55**.

FIG. **6** shows another prior art system where memory **65–68** is distributed with respect to processors **60–63** on a one-for-one basis. In this type of system, the various processors access their respective memory in parallel and thus operate without memory contention between the processors. The system operating structures shown in FIGS. **5** and **6**, as will be discussed hereinafter, are suitable for a particular type of problem, and each is optimized for that type of problem. In the past, systems tended to be either shared or distributed.

As processing requirements become more complex and the speed of operation becomes critical, it is important for systems to be able to handle a wide range of operations, some of which are best performed in the shared memory mode, and some of which are best performed in a distributed memory mode. The structure shown in FIGS. **1** and **2** accomplishes this result by allowing a system to have parallel processing working both in the shared and in the distributed mode. While in these modes, various operational arrangements such as SIMD and MIMD can be achieved.

Multi-Processors and Memory Interconnection

As shown in FIG. **1**, there is a set of parallel processors **100–103** and a master processor **12** connected to a series of memories **10** via a cycle-rate local connection network switch matrix **20** called a crossbar switch. The crossbar switch, as will be shown, is operative on a cycle by cycle basis to interconnect the various processors with the various memories so that different combinations of distributed and shared memory arrangements can be achieved from time to time as necessary for the particular operation. Also, as will

be shown, certain groups of processors can be operating in a distributed mode with respect to certain memories, while other processors concurrently can be operating in the shared mode with respect to each other and with respect to a particular memory.

Another view of the system is shown in FIG. **2** in which the four parallel processors **100**, **101**, **102**, **103** are shown connected to memory **10** via switch matrix **20** which is shown in FIG. **2** as a distributed bus. Also connected to memory **10** via crossbar switch **20** is transfer processor **11** and master processor **12**. Master processor **12** is also connected to data cache **13** via bus **171** and instruction cache **14** via bus **172**. The parallel processors **100** through **103** are interconnected via communication bus **40** so that the processors, as will be discussed hereinafter, can communicate with each other and with master processor **12** and with transfer processor **11**. Transfer processor **11** communicates with external memory **15** via bus **21**.

Also in FIG. **2**, frame controllers **170** are shown communicating with transfer processor **11** via bus **110**. Frame controllers **170** serve to control image inputs and outputs as will be discussed hereinafter. These inputs can be, for example, a video camera, and the output can be, for example, a data display. Any other type of image input or image output could also be utilized in the manner to be more fully discussed hereinafter.

Crossbar switch **20** is shown distributed, and in this form tends to mitigate communication bottlenecks so that communications can flow easily between the various parts of the system. The crossbar switch is integrated on a single chip with the processors and with the memory thereby further enhancing communications among the system elements.

Also, it should be noted that fabrication on a chip is in layers and the switch matrix may have elements on various different layers. When representing the switch pictorially, it is shown in crossbar fashion with horizontals and verticals. In actual practice these may be all running in the same direction only separated spatially from one another. Thus, the terms horizontal and vertical, when applied to the links of the switch matrix, may be interchanged with each other and refer to spatially separated lines in the same or different parallel planes.

Digressing momentarily, the system can operate in several operational modes, one of these modes being a single instruction multiple data (SIMD) mode where a single instruction stream is supplied to more than one parallel processor, and each processor can access the same memory or different memories to operate on the data. The second operational mode is the multiple instruction, multiple data mode (MIMD) where multiple instructions coming from perhaps different memories operate multiple processors operating on data which comes from the same or different memory data banks. These two operational modes are but two of many different operational modes that the system can operate in, and as will be seen, the system can easily switch between operational modes periodically when necessary to operate the different algorithms of the different instruction streams.

Returning briefly to FIG. **1**, master processor **12** is shown connected to the memories via crossbar switch **20**. Transfer processor **11**, which is also shown connected to crossbar switch **20**, is shown connected via bus **21** to external memory **15**. Also note that as part of memory **10**, there are several independent memories and a parameter memory which will be used in conjunction with processor interconnection bus **40** in a manner to be more fully detailed hereinafter. While FIG. **2** shows a single parameter memory, in actuality the parameter memory can be several RAMS (random access memories) per processor which makes communication more efficient and allows the processors to communicate with the RAMS concurrently.

FIG. **4** shows a more detailed view of FIGS. **1** and **2** where the four parallel processors **100–103** are shown interconnected by communication bus **40** and also shown connected to memory **10** via crossbar switch matrix **20**. The various crosspoints of the crossbar switch will be referred to by their coordinate locations starting in a lower left corner with **0-0**. In the numbering scheme, the vertical number will be used first. Thus, the lower left corner crosspoint is known as **0-0**, and the one immediately to the right in the bottom row would be **1-0**. FIG. **19** which will be discussed hereinafter, shows the details of a particular crosspoint, such as crosspoint **1-5**. Continuing now in FIG. **4**, the individual parallel processors, such as parallel processor **103**, are shown having a global data connection (G), a local data connection (L) and an instruction connection (I). Each of these will be detailed hereinafter, and each serves a different purpose. For example, the global connection allows processor **103** to be connected to any of the several individual memories of memory **10**, which can be for data from any of the various individual memories.

The local memory ports of the parallel processors can each address only the memories that are served by three of the vertical switch matrix links immediately opposite the processors. Thus, processor **103** can use verticals **0**, **1** and **2** of crossbar **20** to access memories **10-16**, **10-15** and **10-14** for data transfer in the MIMD mode. In addition, while in the MIMD mode, memory **10-13** supplies an instruction stream to processor **103**. As will be seen, in SIMD mode all of the instructions for the processors come from memory **10-1**. Thus, instruction memory **10-13** is available for data. In this situation, the switch is reconfigured to allow access via vertical **4** of crossbar **20**. The manner in which crossbar **20** is reconfigured will be discussed hereinafter.

As shown in FIG. **4**, each parallel processor **100–103** has a particular global bus and a particular local bus to allow the processor access to the various memories. Thus, parallel processor **100** has a global bus which is horizontal **2** of crossbar **20**, while parallel processor **101** has a global bus which is horizontal **3** of crossbar **20**. Parallel processor **102** has as its global bus horizontal **4**, while parallel processor **103** has as its global bus horizontal **5**.

The local buses from all of the processors share the same horizontal **6**. However, horizontal **6**, as can be seen, is separated into four portions via three-state buffers **404**, **405** and **406**. This effectively provides isolation on horizontal **6** so that each local input to each processor can access different memories. This arrangement has been constructed for efficiency of layout area on the silicon chip. These buffers allow the various portions to be connected together when desired in the manner to be detailed hereinafter for the common communication of data between the processors. This structure allows data from memories **10-0**, **10-2**, **10-3** and **10-4** to be distributed to any of the processors **100–103**.

When the processor is operating in the MIMD operational mode, the instruction port of the processors, for example, the instruction port of processor **103**, is connected through crosspoint **4-7** to instruction memory **10-13**. In this mode crosspoints **4-2**, **4-3**, **4-4**, **4-5** and **4-6**, as well as **4-1**, are disabled. In this mode crosspoint **4-0** is a dynamically operative crosspoint, thereby allowing the transfer processor to also access instruction memory **10-13**, if necessary. This same procedure is available with respect to crosspoint **9-7** (processor **102**) and crosspoint **14-7** (processor **101**).

When the system is in the SIMD mode crosspoint **4-7** is inactive, and crosspoints **4-2** through **4-6** may be activated, thereby allowing memory **10-13** to become available for data to all of the processors **100–103** via vertical **4** of crossbar **20**. Concurrently, while in the SIMD mode buffers **401**, **402** and **403** are activated, thereby allowing instruction memory **10-1** to be accessed by all of the processors **100–103** via their respective instruction inputs. If buffer **403** is activated, but not buffers **401** and **402**, then processors **100** and **101** can share instructor memory **10-1** and operate in the SIMD mode while processors **102** and **103** are free to run in MIMD mode out of memories **10-13** and **10-9** respectively.

Crosspoints **18-0**, **13-0**, **8-0** and **3-0** are used to allow transfer processor **11** to be connected to the instruction inputs of any of the parallel processors. This communication can be for various purposes, including allowing the transfer processor to have access to the parallel processors in situations where there are cache misses.

FIG. **7** is a stylized diagram showing the operation of parallel processors **100–103** operating with respect to memories **55** and **55**A in the shared mode (as previously discussed with respect to FIG. **5**) and operating with respect to memories **65–68** in the distributed mode (as previously discussed with respect to FIG. **6**). The manner of achieving this flexible arrangement of parallel processors will be discussed and shown to depend upon the operation of crossbar switch **20** which is arranged with a plurality of links to be individually operated at crosspoints thereof to effect the different arrangements desired.

Before progressing to discuss the operation of the crossbar switch, it might be helpful to review FIG. **3** and alternate arrangements where a bus **34** can be established connected to a series of processors **30–32**, each processor having the configuration shown with respect to FIGS. **1** and **2**. External memory **35** is shown in FIG. **2** as a single memory **15**, the same memory discussed previously. This memory could be a series of individual memories, both local and located remotely. The structure shown in FIG. **3** can be used to integrate any number of different type of processors together with the image system processor discussed herein, assuming that all of the processors access a single global memory space having a unified addressing capability. This arrangement also assumes a unified contention arrangement for the memory access via bus **34** so that all of the processors can communicate and can maintain order while they each perform their own independent operations. Host processor **33** can share some of the policing problems between the various processors **30–32** to assure an orderly flow of data via bus **34**.

Image Processing

In image processing there are several levels of operations that can be performed on an image. These can be thought about as being different levels with the lowest level being simply to message the data to perform basic operations without understanding the contents of the data. This can be, for example, removal of extraneous specks from an image. A higher level would be to operate on a particular portion of the data, for example, recognizing that some portion of the data represents a circle, but not fully understanding that the circle is one part of a human face. A still higher operational aspect of image processing would be to process the image understanding that the various circles and other shapes form a human image, or other image, and to then utilize this information in various ways.

Each of these levels of image processing is performed most efficiently with the processors operating in a particular type of operational mode. Thus, when operations are performed on data locally grouped together without an attempt to understand the entire image, it is usually more efficient to use the SIMD operational mode where all, or a group of, processors operate from a single instruction and from multiple data sources. When operating in a higher mode where image pixel data is required from various aspects of the entire image in order to understand the entire image, the most efficient operational mode would be the MIMD mode where the processors each operate from individual instructions.

It is important to understand that when the system is operating in the SIMD mode, the entire pixel image can be processed through the various processors operating from a single instruction stream. This would be, for example, when the entire image is to be cleaned, or the image is enhanced to show various corners or edges. Then all of the image data passes through the processors in the SIMD mode, but at any one time data from various different areas of the image cannot be processed in a different manner for different purposes. The general operational characteristic of a SIMD operation is that at any period of time a relatively small amount of the data with respect to the entire image is being operated on. This is followed, in sequential fashion, by more data being operated on in the same manner.

This is in contrast to the MIMD mode where data from various parts of the image is being processed concurrently, some using different algorithms. In this arrangement, different instructions are operating on different data at the same time to achieve a desired result. A simple example would include many different SIMD algorithms (like clean, enhance, extract) operating concurrently or pipelined on many different processors. Another example with MIMD would include the implementation of algorithms with the same data flow although using unique arithmetic or logical functions.

FIGS. **8** and **9** show the prior art form of the SIMD and MIMD processors with their respective memories. These are the preferred typologies for SIMD/MIMD for image processing. The operational modes of the system will be discussed more fully with respect to FIGS. **59–64**. In general, data paths **80** of FIG. **8** corresponds to data path **6010**, **6020**, **6030** and **6040** of FIG. **60**, while processor **90** of FIG. **9** corresponds to processor **5901**, **5911**, **5921**, **5931** of FIG. **59**. The controller (**6002** of FIG. **60**) for the data paths is not shown in FIG. **8**.

Reconfigurable SIMD/MIMD

FIG. **10** shows the reconfigurable SIMD/MIMD topology of this invention where several parallel processors can be interconnected via crossbar switch **20** to a series of memories **10** and can be connected via a transfer processor **11** to external memory **15**, all on a cycle by cycle basis.

One of the problems of operating in the MIMD topology is that data access can require high bandwidth as compared to operation in the SIMD mode where the effective data flow is on a serial basis or is emulated in the topology. Thus, in the SIMD mode, the data typically flows sequentially through the various processors from one processor to the next. This can be a blessing as well as a problem. The problem arises in that all of the data of the image has to be processed in order to arrive at a certain point in the processing. This is accomplished in the SIMD mode in a serial fashion. However, the MIMD mode solves this type of a problem because data from the individual memories can be obtained at any time in the cycle, as contrasted to the operation in the SIMD where the shared memory can only be accessed upon a serial basis as the data arrives.

However, the MIMD mode has operational bottlenecks when it is required to have interprocessor communication

since then one processor must write the data to a memory and then the other processor must know the information is there and then access that memory. This can require several cycles of operational time and thus large images with vast pixel data could require high processing times. This is a major difficulty. In the structure of FIG. **10**, as discussed, these problems have been overcome because the crossbar switch can serve to, on a cycle by cycle basis if necessary, interconnect various processors together to work from a single instruction for a period of time or to work independently so that data which is stored in a first memory can remain in that memory while a different processor is for, one cycle or for a period of time, connected to that same memory. In essence, in some of the prior art, the data must be moved from memory to memory for access by the various processors, which in the instant system the data can remain constant in the memory while the processors are switched as necessary between the memories. This allows for complete flexibility of processor and memory operation as well as optimal use of data transfer resources.

A specific example of the processing of data in the various SIMD and MIMD modes can be shown with respect to FIGS. **12** and **13**. In FIG. **12** there is shown an image **125** having a series of pixels **0**–n. Note that while in the image a row is shown having only four pixels, this is by way of example only, and a typical image would have perhaps a thousand rows, each row having a thousand pixels. At any one point in time the number of pixels in a row and the number of rows will vary. For our purposes, we will assume that the row has four pixels. One way of representing these pixels in memory **124** is to put them into individual addressable spaces shown as pixels **0**, pixel **1** down to pixel n in memory **124**. Of course, this can be one memory or a series of memories, as will be discussed hereinafter. The memories could be arranged such that each row is stored in a different memory.

Assume now that it is desirable to process all of the data, either for all of the pixels or for any subgroup of the pixels, so that all of the data is processed by the same instruction and is returned back to memory. In this manner the data from memory **124** pixel **0** would be loaded into processor **120** and then shifted from processors **120** to **121**, to **122**, to **123**, and at each shift new data would be entered. Using this approach, each of the processors **120–123** has an opportunity to perform a function on the data as well as to observe the functions previously performed on the data. When the chain is finished, the data is returned to memory. This cycle can continue so that all of the pixels in the subset, or all of the pixels in the image, can be processed sequentially through the system. This type of operation is performed best in the SIMD mode.

This is in contrast to the arrangement shown in FIG. **13** where the MIMD data flow is illustrated. In such a system, it is perhaps desirable to have pixels **0** through **3** and **250–500** processed in a particular manner, while other pixels from other image regions (which differ from a certain region **3** of the image) are processed in a different manner. In this way then processor **120** would be arranged to process pixels **0–3** and pixels **250–500** while processor **121** is arranged to process pixels **50–75** and pixels **2000–3000**. Each region can then be processed using different algorithms or by the same algorithm but with program flow changes that are dependant on the data contents. These pixels are all processed in parallel and stored at various memory locations. In this mode the MIMD operation would be faster than the SIMD operation except in situations where data would have to move from processor **121** to processor **120**, in which case there would have to be a movement of data in the memory bank. This interprocessor data movement could be required, for example, in situations where data processed from a particular region is important in determining how to process data from another region, or for determining exactly what the total image represents. Just as it is difficult to determine the shape of an elephant from a grasp of its trunk, it is equally difficult to obtain meaningful information from an image without access to different portions of the pixel data.

Turning now to FIG. **14**, there is graphically illustrated a system utilizing the present invention. Crossbar switch **20** allows processors **100–103** to access individual memories M1–M4 of memory **10**, and on a cycle by cycle basis. The structure shown in FIG. **14** allows the operation described in FIG. **12** with respect to the SIMD operation such that the data in the memory elements, M1–M4 remains stationary and the connections from the processor switch. The continual flow of the process is enhanced by having more memory elements than actually utilized by the processors at a given instance. Thus, data can move in and out from these "extra" memory elements, and these extra elements can be cycled into the operational stream. In such an arrangement, data in and data out memory elements would, on a cycle by cycle basis, be different memory elements. Note that the data in and data out memories are switched through the crossbar and thus can be positioned in any of the memory elements. Thus, instead of moving the data between memories, the processor connection is sequentially changed.

Turning now to FIG. **15**, the MIMD mode is shown such that processors **100–103** are connected through crossbar switch **20** to various memories. Typically, these connections would last through several cycles and thus, the processors each would be connected to the respective memories for a period of time. While this is not necessary, it would be the most typical operation in the MIMD mode. For any processor, or group of processors operating in the MIMD mode of FIG. **15**, crossbar switch **20** can, on a cycle by cycle basis, be operated so that data from a particular memory element is immediately made available to any of the other processors so that the data can either be cycled through the other processors or operated on a one-time basis.

Reconfigurable Interprocessor Communication

FIG. **16** shows the diagram of interprocessor communication when the system is operating in the MIMD mode when the various processors must communicate with each other. A processor, such as processor **100**, sends a message through crossbar switch **20** to the shared parameter memory while at the same time registering a message (interrupt) in the destination processor that a parameter message is waiting. The destination processor, which can be any one of the other processors such as processor **102**, then via crossbar switch **20** accesses the shared parameter memory to remove the message. The destination processor, for example, then could reconfigure itself in accordance with the received message. This reconfiguration can be internal to provide a particular system mode of operation or can be an instruction as to which memories to access and which memories not to access for a period of time.

The question of accessing memories (contention) is important because a processor can waste a lot of time trying to access a memory when another processor is using that memory for an extended period. The efficient operation of the system would be very difficult to achieve without the interprocessor coupling via the communication link.

Another type of message which is communicated between the processors relates to the synchronization of the processors. These messages and the precise manner in which

synchronization is accomplished will be discussed hereinafter. FIG. **2** shows the full system arrangement where the processors are interconnected for interrupting or polling between them to control sync, memory and crossbar allocation on a cycle by cycle basis.

It is the communication links between the processors which function outside of the crossbar switch that supports a more efficient utilization of the memory. The number of cycles that are required to switch operational modes, for example between SIMD and MIMD, is dependent upon the amount of other operations which must be performed. These other operations are, for example, loading of code in various instruction memories and the loading of data into data memories for subsequent operation. The external communications help this function by establishing which memories a particular processor may access and instructing all of the processors as to their ability to access memories so that the processors are not waiting in line for access when the access is being denied.

The instructions between processors can be by interrupt and by polling. The interrupt can be in any one of the well-known interrupt configurations where data can be transmitted with a flag to point to particular message locations within the shared parameter memory or can operate directly on a pointer basis within the processor. The ability to establish on a cycle by cycle basis which processor has access to which memory is important in establishing the ability of the system to operate in the MIMD mode so that data can reside in a particular memory, and the processors which have access to that data are continually shifted. Using this arrangement then, several cycles of time, which would be required to move data from memory to memory if the memories were on a fixed relationship to processors, are dramatically eliminated. The communication link includes the master processor.

Transfer Processor

Transfer processor **11** shown in FIGS. **1** and **2** and in FIG. **57** transfers data between external memory and the various internal memory elements. Transfer processor **11** is designed to operate from packet requests such that any of the parallel processors or the master processor can ask transfer processor **11** to provide data for any particular pixel or a group of pixels or data, and the transfer processor will transfer the necessary data to or from external and internal memory without further processor intervention instructions. This then allows transfer processor **11** to work autonomously and to process data in and out of the system without monitoring by any of the processors. Transfer processor **11** is connected to all of the memories through switch matrix **20** and is arranged to contend with the various links for access to the memories. Transfer processor **11** for any particular link may be assigned the lowest priority and access a memory when another processor is not accessing that memory. The data that is being moved by the transfer processor is not only the data for processing pixels, but instruction streams for controlling the system. These instruction streams are loaded into the instruction memory via crossbar switch **20**. Transfer processor **11** can be arranged with a combination of hardware and software to effect the purpose of data transfer.

Master Processor

The master processor, shown in more detail in FIG. **29**, is used for scheduling and control of the entire system, including the control of the transfer processor as well as the interaction between the various processors. The master processor has a connection through the crossbar switch to all of the memories and is interconnected with the other processors on the communication channel. The master processor can control the type of data and the manner in which the data is obtained by the transfer processor depending upon the pixel information and the particular purpose for which the information is being obtained. Thus, regions of the image can be scanned under different scan modes depending upon the purpose for the scan. This is controlled by the master processor working in conjunction with the parallel processors. The parallel processors may each also control the transfer processor, either alone or in conjunction with the master processor, again depending upon the purpose for the operation.

The contention for the memory to the crossbar switch can be arranged such that the parallel processors have higher priority, the master processor has lower priority, and the transfer processor has third or lowest priority for any particular memory on a particular link.

FIG. **11** shows a listing of various operations or algorithms which the imaging processing system would typically perform. A typical type of operation would be optical character recognition, target recognition or movement recognition. In each of these situations, the associated image processing would be controlled by the kind of operations to be performed.

In FIG. **11**, the types of operations which are typically performed by the parallel processors are shown below line **1100** and the types of operations which are typically performed by the master processor are shown above line **1100**. While this arrangement of operations is arbitrarily divided between the master processor and the parallel processors, the types of operations required to achieve the various operations shown tend to make them more suitable for either the master processor or the parallel processor.

As an example of image processing starting from an image and working higher in the hierarchy of operations, the image is first received by image enhancement **1111**. In some situations it is necessary to compress or decompress the image via boxes **1112** and **1113**. The image is then moved upwards through the various possibilities for edge extraction **1109**, line linkage **1107**, corner or vertices recognition **1105**, histogram **1110**, statistical properties **1108** and segmentation **1106**. These boxes can all be skipped and the image provided directly to template matching **1102** for the purpose of determining the image identification **1101**. There are various methods of achieving this identification, all of which are not necessary for every image, and all of which are well known in the art as individual algorithms or methods.

Enhancement block **1111** is a process which essentially cleans an image, removes extraneous signals and enhances details of the image, such as lines. Box **1109**, edge extraction, is a process which determines the causes or existence of edges in an image. Box **1107** connects all the lines which have been extracted from the image and links them together to form longer lines. The process then removes extraneous dashes caused by inconsistencies in the data. Box **1105**, corners and vertices, is an algorithm which determines where the corners of an image might be located. Once these geometric shapes are found, a process of grouping and labeling, block **1104**, can then be used to identify major groupings of objects, such as circles and rectangles.

At this point, the operations have centered their focus on a smaller region of the image whereas in block **1111** the entire image is typically operated on. An alternate path after every enhancement is to perform statistical analysis, such as a histogram, **1110**, of the intensities of the pixels. One purpose of a histogram is to discover the number of ones or the number of ones in a particular axis or projection which would then be useful statistical information to quantify the

presence of some object or orientation of an object. This will be discussed hereinafter.

Block **1108**, statistical properties, then extracts from these histograms the proper statistical properties. Continuing upward, block **1106** is a process of segmentation whereby the statistical properties could be used to segment different objects. As an example, several disconnected objects could then be quite easily segmented. Then through the progression to grouping and labeling **1104**, where an image has different objects identified with specific labels. Connector component algorithms are typical in this area. At this point also certain geometric features can be analyzed **1103**, particularly the perimeter of the object. Other shape descripters, Euler numbers, and a description of the surface can be obtained and used for future matching operations. Matching operations level **1102** is reached where similar information which is stored as templates or libraries are accessed and compared against the data that is extracted from the lower level. This can be either geometric, surface description or optical flow information. Once a match has occurred, these matches then are statistically weighted to determine the degree of certainty that an object has been identified as shown by block **1101**. Once we have identified objects, we will in some applications such as stereopsis or motion have a three dimensional representation of the world knowing what the objects are and where they are placed in the world. At this point we can then re-render the scene using a graphics pipeline as shown by the right side of FIG. **11**.

The first block, geometric model **1114**, identifies a representation of this scene which basically is three coordinates showing position and a geometric description of the object such as its shape, density and reflective properties. At this point, depending upon the type of object, several different routes would be used to render the scene. If there were simple characters, two dimensional transforms would be employed. If they were more complex, three dimensional worlds would be created. A hand waving in front of a computer for use as a gesture input device would use this method and implement function **1116**, which is a three dimensional transform. This would transform the input into a new coordinate system, either by translating scaling or rotating the three dimensional coordinates via 3D transform block **1116**. Certain objects would be occluded by other objects. Again in the hand example, some fingers may be occluded by other fingers, and this operation using visibility block **1117** would then ignore the parts that were not visible. As we move down in FIG. **11** to shaded solid box **1118** we find a process which would generate gray scale or pixel information to give a smooth shaded solid image which would be more realistic and more lifelike than taking the other route down to clipping box **1120**. Clipping box **1120** essentially clips things that are out of the field of view of the scene that is being generated.

In a special case of rendering fonts on a computer screen or on a laser printer or such, box **1119**, font compilation, would be used to create sophisticated fonts of multiple sizes and shapes. Then the final process in the graphics program would be actually to draw the objects, via block **1121**, which might be as simple as drawing dots and lines that connect the dots. We are now back at the original level of image enhancement **1111** and have recreated a synthetic representation of original image based upon a model which has been derived from that original image.

It is understood that once a character is recognized or a movement is recognized, an output can be obtained, either in binary code or otherwise, to control further processing of the same image via output control **1122** by the operation and the combination of the parallel processors and the master processor working with the image processing system.

Generally, the boxes shown below line **1100** are typically operationally efficient to be performed in the SIMD mode and require a vast amount of processing. These are performed with the parallel processing operation. The operations above line **1100** require relatively less processing capabilities and are less bandwidth intensive. Accordingly, they are performed by a single processor. Also note that with respect to the operations, as the hierarchy moves upwards on the chart the likelihood is that the MIMD operations would be the preferred operation. Often the SIMD and MIMD operations overlap, and both types of operational modes are required.

The main reason why two different types of processors are necessary is because of the level of the processing. High level processing, as performed by the master processor, preferably uses floating point arithmetic for high precision. High precision floating point processors require more real estate space and are slower to operate from non-floating point processors. Therefore, if all of the processors were the same, there could be fewer processors on a given chip which would increase the problem of bandwidth and slow down the operation of the system. On the other hand, the low level processors do not require floating point arithmetic and thus can be made faster and smaller, which in turn allows more processors to be constructed on a given chip. The bus structure shown utilizing a crossbar switch can therefore take several different types of processors as required and switch them into the system to perform portions of every operation if necessary.

The master processor is designed to operate primarily on lists such as information lists and display lists, whereas the parallel processors are intended to operate on arrays. At the low level image processing most of the information can be described as two dimensional arrays, whereas at the higher level, the information is described as lists of multidimensional coordinates. The manipulation of these two different types of data representations requires different processing structures which is another motivation for the master and parallel processors having different structures.

The master processor of the preferred embodiment would have features similar to a RISC (reduced instruction set computer) processor which is primarily intended for general purpose computing operations, whereas the parallel processors are more like digital signal processors (DSP) which tend to be specialized processors for arithmetic operations. Thus, the system could be optimized for the types of information processing required for image systems, while still maintaining the high degree of processing capability and the total flexibility achieved by using both types of processors on the same data.

Texas Instruments TMS 320 DSP processors are disclosed in coassigned U.S. Pat. Nos. 4,577,282, 4,713,748 and 4,912,636. Further background is disclosed in the publications *Second Generation TMS* 320 *Users Guide* and *Third Generation TMS* 320 *Users Guide* from Texas Instruments Incorporated. These patents, said application and publications are hereby incorporated herein by reference.

Memory Structure

FIG. **17** shows a view of the image processing system, as discussed with respect to FIGS. **1** and **2**, showing a particular layout of memory. It should be kept in mind, however, that the particular memory sizes have been selected for a particular project, and any type of arrangement of memory and memory capacities can be utilized with this invention. The parameter section of memory **10** can be incorporated within

memory **10** or can be, if desired, a stand-alone memory. Under some conditions the parameter memory need not be present depending upon the communication requirements of the processors.

Crossbar Switch

FIG. **18** shows the prioritization circuitry of crossbar switch **20**. Each vertical of the crossbar switch is connected in a round robin fashion to a prioritization circuit internal to the particular crosspoint. In every vertical the lowest horizontal, which is associated with the transfer processor, is not included in the prioritization wiring. This is so that when none of the other horizontals in the same vertical have been selected, the transfer processor has access to the memory. The exact manner in which the prioritization circuitry operates and the manner in which the lowest horizontal operates will be detailed more fully hereinafter with respect to FIGS. **19** and **20**.

FIG. **18** also shows the special situation of the instruction vertical I for the parallel processors. The instruction vertical for parallel processor **103** is connected through crosspoint **4-7**, which crosspoint is enabled by a signal on the SIMD lead via invertor **1801**. This same signal is provided to every horizontal crosspoint **4-1** through **4-6** in the same vertical to render those crosspoints inactive. This signal and the manner in which the instruction vertical is connected to memory will be discussed hereinafter.

Turning now to FIG. **19**, the details of an exemplary crosspoint **1-5** is shown in detail. In the figure, the five sided box with a control line entering the side is a control switch, typically a FET device.

The functionality of the crosspoint logic is described. The crosspoint logic contains four functional blocks. These will each be described. The first functional block is address recognition block **1901** which compares five bits of the address supplied by the processor on bus **1932** with the unique five bit value of the memory module **10-15** (connected to crosspoint **1-5** via vertical **1** as shown in FIG. **4**) presented on bus **1930**. The value presented on bus **1930** indicates the location of the memory within the address space. The comparison is achieved by five two-input exclusive-NOR gates **1920–1924** which perform individual bit comparisons. The outputs of these five gates are supplied to five of the inputs of the six input NAND gate **1910**. The sixth input of gate **1910** is connected to the global access signal **1933** which indicates that a memory request is actually being performed and the address output by the processor should actually be compared. Only when signal **1933** is a logic one and the outputs of gates **1920–1924** are also all one will the output of gate **1910** be a logical zero. A logic zero indicates that a valid request for memory **10-15** is being made.

Digressing, a modification that can be made to this address recognition logic is to include a seventh input to gate **1910** (enable SIMD) that can be used as an enable signal for the crosspoint logic. A logical zero on the enable signal will cause the address recognition logic to be disabled, thus disabling the entire crosspoint. This is used on the crosspoints on vertical buses **4**, **9**, and **14** which connect to horizontal buses **1** to **6**, to enable the crosspoints in SIMD mode and disable them in MIMD mode.

The second functional block is token latch **1904**. This block outputs a signal B1 which is used to indicate the start point of the round-robin prioritization. Signal B1 connects to the input signal B of the next crosspoint logic vertically below crosspoint **1-5**, (crosspoint **1-4**). (Signal B1 of crosspoint **1-1** is wrapped around to connect to signal B of crosspoint **1-6** to create a circular prioritization scheme as shown in FIG. **18**). Only one signal B1 within the crosspoint logics associated with vertical bus **1** will output a logical zero. All the others will output logical ones. This is achieved by only loading one crosspoint token latch **1904** with a value of zero at system initialization, and the other crosspoint token latches with a one. This is achieved by connecting the preset value signal to a logical zero on one crosspoint and a logical one on the others and activating clock**5**. This loads the preset value through transistor **1956** into the latch comprised of inverter **1946** and inverter **1945**. This value in turn is clocked with clock**2** through transistor **1955** into the latch comprising inverter **1947** and inverter **1948**. The output of inverter **1947** is signal B1. This signal is supplied to one input of the two-input NAND gate **1913** whose other input is the output of gate **1910**. The output of gate **1913** is supplied to one input of the two-input NAND gate **1914**, whose other input comes from the output of gate **1911**. The output of gate **1914** is clocked by clock**4** through transistor **1953** into the earlier described latch of gates **1945** and **1946**. It is arranged that clock**2** and clock**4** are never active simultaneously, and that clock**4** is not active when clock**5** is active.

The logic of the token latch records which crosspoint logic associated with memory **10-15** last gained access to the memory. This is indicated by a logical zero B1 signal being output by that crosspoint latch. The token latch logic works in conjunction with the prioritization block, to be described next, to cause the crosspoint which last accessed the memory to have the lowest priority access, if future multiple simultaneous accesses are attempted to the memory. How the token latch contents are altered will be described after the prioritization block has been described.

The prioritization block **1902** contains two two-input NAND gates **1911** and **1912**. The two inputs of gate **1912** are supplied from the output of gates **1910** and **1911**. The output of gate **1912** is signal A1 which connects to signal A of the vertically below crosspoint (**1-4**). One input of gate **1911** is the previously mentioned signal B which is connected to signal B1 from the token latch in the logic circuit associated with the next higher vertical (crosspoint **1-6**). The other signal is also the previously described signal A which is connected to signal A1 from the prioritization block in the next higher vertical (crosspoint logic **1-6**).

The prioritization logic forms a circular ripple path that begins with the crosspoint logic vertically below the last crosspoint to access the memory. This is indicated by a logical zero on a B1 signal. This causes the output of gate **1911** of the next vertical crosspoint below to be a logical one. This is gated by gate **1912** with the output of gate **1910** in order to produce signal A1. If the output of gate **1910** is a logical one, indicating that an address match by the address recognition logic wasn't found, then signal A1 will be a zero. This is passed to the next lower vertical crosspoint, causing its gate **1911** to output a one, and so on around the circular ripple path. If however the output of gate **1910** is a zero, then the signal A1 will be output to the next crosspoint as a logical one. This, in conjunction with a one on all subsequent B inputs (since only the ripple start point can output a zero B signal), causes all other gates **1911** around the ripple path to output logical zeros. Thus, a crosspoint can gain access to a memory only when it has a one on the output of its gate **1911** and it is producing a logical zero on the output of its gate **1910**. This occurs only when an address match is found by the address recognition block and the crosspoint is the first to request a memory access from the start of the circular ripple path.

The management of the token latch contents will now be explained. Gates **1913** and **1914** are designed to make sure

that the last crosspoint to gain memory access holds a zero in the token latch. Consider the following cases:

1. The token in token latch **1904** is a zero and no bus requires memory access. The zero ripples completely around the circular carry path and returns to signal A of the originating crosspoint as a zero, causing the output of gate **1911** to be a one. The zero already held in the token latch (signal B1) causes the output of gate **1913** to be a one. These two signals cause the output of gate **1914** to be a zero, which is loaded into the latch **1945/1946** by clock**4** via transistor **1953**, thus maintaining a zero in the token latch, thereby continuing the ripple propagation.
2. The token in token latch **1904** is a zero and one of the other crosspoints requires access to the memory. In this case, signal A will be received back as a one, which in conjunction with the one on input B will cause the output of gate **1911** to be a zero, causing the output of gate **1914** to be a one. This is then loaded into token latch **1904** by clock**4** as a one. The token latch has thus become a one since another crosspoint has just gained memory access.
3. The token in token latch **1904** is a one and a crosspoint prioritized higher is requesting memory access. In this case A and B are both received as ones and, as in the above case, the token will similarly be loaded with a one.
4. The token in token latch **1904** is a one, the crosspoint is requesting memory access, and no higher priority crosspoint is requesting memory access. In this case either A or B will be received as a zero, causing the output of gate **1911** to be a one. The output of gate **1910** will be a zero, since the address recognition logic is detecting an address match. This will cause the output of gate **1913** to be a one. Since both inputs of gate **1914** are one, it will output a zero, which is loaded into token latch **1904** by clock**4**. The token latch has thus become a zero because it has just been granted memory access.

The fourth block of logic is the grant latch. The output of gate **1910** is passed through an inverter **1940** into one input of a two-input NAND gate **1915**, whose other input is connected to the output of gate **1911**. The one condition of a logical one on the output of gate **1911** and a zero on the output of gate **1910** causes the output of gate **1915** to be a zero. (Otherwise it is a one). This condition occurs when the crosspoint is successfully granted access to the memory, and can occur on only one of the crosspoints associated with the memory. The output of gate **1915** is loaded into latch **1941/1942** through transistor **1951** by clock**1**. (In practice clock**1** and clock**4** will operate together so that the token latch and the grant latch are updated together). The output of gate **1942** is loaded through transistor **1952** by clock**2** into latch **1943/1944**. The output of gate **1944** is passed to gate **1949** which produces the connect signal to the crosspoint switches **1905**, which connect processor bus **1932** to memory bus **1931**. These crosspoint switches can be individual n-type transistors in their simplest implementation.

The output of gate **1942** is also supplied to the gate of transistor **1958** which connects between signal **1934** and the source of transistor **1957**, whose drain connects to ground, and whose gate is connected to clock**2**. Transistors **1957** and **1958** cause signal **1934** to be connected to ground when the crosspoint has successfully been granted memory access. This indicates to the processor that it can proceed with the memory access. If however signal **1934** does not go low when a memory access is attempted, then another crosspoint has gained memory access and the processor must halt and re-request access to the memory. The round-robin prioritization scheme described ensures that only a limited number of retries need be performed before access is granted.

An example of the timing of the crossbar signals is given in FIG. **20**. In this figure PP**2** and PP**3** are both trying to access the same RAM every cycle, but the round-robin priority logic causes them to alternate. PP**2** is calculating and outputting addresses S, T and U, and PP**3** is calculating and outputting addresses V and W. It can be seen from the **115** MS ADDR signals how the GRANTED-signal is used to multiplex between the last address (in the case of a retry) and the new address being calculated. The PPs assume that if the GRANTED-signal is not active by the end of the slave phase then contention occurred, and the master update phases of the fetch, address and execute pipeline stages are killed.

Integration of the Switch Matrix

As discussed herein, memory contention is handled by a token passing arrangement having logic circuitry individual to each crosspoint. In one embodiment, the logic circuitry is positioned in direct association with each crosspoint. Thus, since the crosspoints are spatially distributed across the substrate in conjunction with their respective ports, the contention control logic is likewise distributed spatially. In addition to saving space the actual logic of the circuit can grow as the switch grows. In this manner the logic can be positioned in one of the layers of the silicon so that no additional silicon chip area is consumed. This has the advantage of conserving space while also minimizing connections to and from the token passing circuit.

Synchronized MIMD

Each processor **100–103**, as shown in FIG. **21**, has associated with it a register **2100–2103** respectively for indicating if synchronized operation is required. Also included, as will be seen, is a register for holding the address (identity) of the other processors synchronized with that processor. The instruction stream contains instructions which indicate the beginning and end of a series of instructions that must be executed in synchronization with the processors. Once the code for starting a synchronized instruction stream arrives at a processor, that processor, and all the processors in the synchronized set, can only execute instructions in lock step with each other until such time as the end of synchronized code instruction is encountered.

Using this approach, no messages need be transferred between processors, and the processors will remain in step for one cycle, or a number of cycles, depending upon the instruction stream being executed. No external control, other than the instruction stream, is required to establish the synchronization relationships between processors.

Turning to FIG. **22**, within each parallel processor **100–103**, there is a sync register **2207** containing four bits labelled **3, 2, 1, 0** that relate to processors **103, 102, 101** and **100** respectively. One bit relates to each processor **100–103**. The other processor(s) to which a particular processor will synchronize is indicated by writing a one to the bits corresponding to those processors. The other processor(s) which are expecting to be synchronized will similarly have set the appropriate bits in their sync register(s).

Code that is desired to be executed in synchronization is indicated by bounding it with LCK (Lock) and ULCK (Unlock) instructions. The instructions following the LCK, and those up to and including the ULCK, will be fetched in lock-step with the other parallel processor(s). (There must, therefore, be the same number of instructions between the LCK and ULCK instructions in each synchronized parallel processor).

It is more usually synchronized data transfer that is required rather than synchronized fetching of instructions. It

is a consequence of the parallel processors' pipelines however that the transfer(s) coded in parallel with the LCK instruction and those up to and including the instruction immediately preceding the ULCK instruction, will be synchronous. They may not necessarily (due to memory access conflicts) occur in exactly the same machine cycle, but the transfers coded in the following instruction will not proceed until all the synchronized transfers of the previous instruction have occurred. The order of the load and store would otherwise be upset by memory access conflicts.

The knowledge that synchronized code is being executed is recorded by the S (synchronized) bit in each status register. (This bit is not actually set or reset until the master phase of the address pipeline stage of the LCK or ULCK instructions, respectively, but the effect of the LCK or ULCK instruction affects the fetch of the next instruction during the slave phase). This bit is cleared by reset and by interrupts once the status register has been pushed.

Continuing in FIG. **22**, the four bits for each of the sync registers **2207** are set by software depending upon the desired synchronization between the various processors. Thus, assuming that processor **100** is to be synchronized with processor **103**, then the bits shown would be loaded into the respective registers **2207**. These bits would be **1**, **0**, **0**, **1** showing that processor **3** is to be synchronized with processor **0**. Also as shown, as processors **101** and **102** are to be synchronized, their respective sync control registers would each contain the bits **0**, **1**, **1**, **0**.

Turning now to processor **100**, it should be noted that the presence of a **0** in any bit of sync register **2207** causes a logic one to appear on the output of the respective NAND gate. Thus, with the example shown, the NAND gates **2203** and **2204** would have logic ones on their respective output. These ones are supplied to the input of NAND gate **2206**. NAND gate **2206** will not allow processor **100** to execute any more instructions of code until all of its respective inputs are one. Note that the presence of the zeros in the bit positions **1** and **2** of register **2207** causes the respective gates **2203** and **2204** to ignore the presence of any signals on leads **1** and **2** of bus **40**. Thus, the execution of code was controlled by gate **2206**, in this case in response to the information on leads **0** and **3** of bus **40**. The lock instruction will cause the S bit to become set which is a logic 1 to one of the inputs to gate **2201**. For the moment we will ignore the presence of the okay to sync signal which is a signal which controls the timing of the actual execute for the processor. The output of gate **2201** for each of the processors sync registers is connected to a different lead. Thus, gate **2201** from processor **100** is connected to lead **0**, while gate **2201** from processor **101** is connected to lead **1**, etc. Note that the output of gate **2201** from processor **100** is connected to the **0** input of gates **2205** of all of the other processor registers. Since in processor **101** and **102**, gates **2205** are connected to logic zero, this has no effect. However, in processor **103** where gate **2205** is connected to a logic 1 of the register, it is thus controlled by the output on lead **0** of bus **40** which in fact is controlled by the output of gate **2201**. Thus, processor **103** is controlled by the actions which occur within processor **100**, which is exactly what we desire if processor **103** is to be synchronized with processor **100**. A review of the circuitry would show that the same function operates in reverse from processor **103** to processor **100** since in processor **103** gate **2201** is associated with lead **3** of bus **40**, which in turn is associated with gate **2202** of processor **100**, which in turn is also controlled by a one in sync register **2207**.

Now returning to the signal on gate **2201** which is the okay to sync signal. When that signal goes to logic 1, then it is okay to execute code, and all of the other processors having a one in the sync register bit **0** position of the respective register will operate in synchronization with that signal. Thus, if the okay to sync signal goes low signifying a problem with the cache memory or any other problem with the execution of code, all of the processors synchronized therewith will wait until the problem is clear. Thus, we have full synchronization between processors as controlled by the codes periodically stored in the respective registers. All of the processors can be synchronized or any combination of processors can be synchronized with each other, and there can be any number of different synchronizations occurring between processors.

Since it is the instruction fetch that is synchronized, it is possible to interrupt synchronized code. This will immediately cause the parallel processor's okay to sync signal to become inactive. Cache misses and contention will have a similar effect, keeping the machines in step. In the case of contention, however, the two instructions following the one experiencing contention will have already been fetched into the pipeline before the pipeline pauses.

It is possible to put idle instructions into synchronized code, thus pausing the operation of all the synchronized parallel processors until a particular parallel processor has been interrupted and returned from its interrupt routine.

Since it is necessary to be able to interrupt synchronized code, any instruction that specified the program counter PC in any one processor as a destination will immediately disable the effect of the S bit of the status register (with the same timing as the ULCK instruction), but the S bit will remain set. Once the two delay slot instructions have completed, the effect of the S bit is re-enabled. This mechanism prevents problems with being unable to interrupt synchronized delay slot instructions. The sync logic therefore treats branches, calls and returns (implemented as a PC load followed by two delay slot instructions) as a single instruction. The sync signal will be driven inactive during the two delay slot instructions and they will be fetched without looking at the sync signals. If a LCK instruction is put in a delay slot, it will take effect after the delay slot instructions have been executed. Synchronized loops behave like normal code because their branches operate in the fetch pipeline stage and not the execute stage.

An example of how synchronization works is given in FIG. **23**. In this case, parallel processor **2** and parallel **1** exchange the contents of their data DO registers (FIG. **33**), assuming that **A0** and **A1** contain the same addresses in each parallel processor. It also assumes that **A0** and **A1** point to different RAMs to avoid contention. (It would still work if they pointed to the same RAM, but would take extra cycles).

In this example parallel processor **1** arrives at its LCK instruction one cycle after parallel processor **2** arrives at its LCK instruction. Parallel processor **2** has thus waited one cycle. They then perform the stores simultaneously but parallel processor **2** then has a cache miss when fetching the load instruction. Both parallel processors wait until the cache miss has been serviced by the transfer processor. They then execute the loads simultaneously and similarly the ULCKs. Parallel processor **1** then experiences a cache miss when fetching instruction **4**, but since the parallel processors are now unlocked, parallel processor **2** carries on unimpeded.

Synchronization in SIMD is implicit, so the LCK and ULCK instructions have no purpose and so will have no effect if coded. The S bit in the status register will have no effect if anyone should set it to one.

The instructions shown in the appendix (LCK) is used to begin a piece of MIMD synchronized parallel processor

code. It will cause the parallel processor to wait until all the parallel processors indicated by ones in the sync register are in sync with each other. The following instructions will then be fetched in step with the other MIMD parallel processors. Execution of the address and execute pipeline stages will occur as each successive instruction is synchronously fetched. The S bit of the status register is set during the address pipeline stage of this instruction.

The instruction shown in the appendix (ULCK) unlocks the MIMD parallel processors from each other. They then resume independent instruction execution on the next instruction fetch.

Sliced Addressing

Sliced addressing is a technique for taking adjacent information from one memory space and distributing it in a manner to a number of separate different memory spaces so that the information when it has been distributed can be accessed simultaneously by a number of processors without contention.

As an example, reference is made to FIG. **24** where there is shown an external image memory buffer **15** having a row of adjacent pixels numbered **0–127**, and this row has the letter "a" referencing it. This information is transferred, using the sliced addressing technique, via bus **2401**, into memory subsystem **10** whereby the first sixteen pixels (**0–15**) are placed into the first memory **10-0** referred to by address **0-15**. Then the next sixteen pixels are placed into memory **10-1**. In this example this process is continued through eight memories such that pixels **112–127** are placed into final memory **10-7**. The sliced addressing logic **2401** is implemented in the transfer processor and also in the cross-bar address units of the parallel processors which will be described hereinafter.

The prior art means of address calculation would produce in the given example **128** consecutive addresses. This would mean that the data would be placed within one memory. In the given example the data would appear at consecutive addresses within memory **10-0**. This would not allow a number of processors simultaneous access to that information without contention since they would all be trying to access the same memory. Thus, in the prior art, pixels **0–15** would be in row A of memory **0** with bits **16–31** in row B and bits **32–47** in row C, etc., until all of the **127** adjacent pixels would be in various rows of memory **0**. Since the various different processors are working in parallel to process information, they could all contend for access to memory **0** to various pixel bytes, and accordingly time would be wasted, and the value of the parallel processing would be mitigated.

FIG. **25** shows a prior art adder which is used for controlling the location of the address for various bits. FIG. **25** shows three single bit adders **2501, 2502, 2503**, which are part of a full adder having a number of single bits equal to the address range of the memory. These adders work such that one bit of the address is provided to each A input of the various adders **2501–2503**. The least significant bit of the address would go to adder **2501**, and the most significant bit would go to the highest single bit adder **2503**.

The B input receives the binary representation of the amount to be indexed for the address for storage purposes. The combination of adders **2501–2503** will produce a resulting address which is used for accessing memory. Each individual adder will output a carry signal to the next highest numbered adder carry input signal. Each individual adder bit will take in the three inputs A, B and carry in, and if there are two or three ones present on any of those inputs, then the carry out from that cell will be a one. This is supplied to the next most significant carry in input of the adder. This process is repeated for each individual adder bit to produce a resultant address of the size required to access the memory space. The fact that each carry out connects directly to the next most significant carry in, means that the resultant address is always part of a contiguous address space. In the previous example, if an index of value one is supplied to the B inputs of the adder, then the resultant address output to memory will be one greater than the original address supplied on the A inputs.

With reference to FIG. **26**, the modification to the previously described normal adder is made whereby the carry out of each cell is multiplexed with the carry in signal supplied to each cell, such that the signal that is passed to the next most significant carry in inputs of the adder can be selected to be either the carry out of the previous cell or the carry in for that previous cell. As an example, consider cell **2505**. Its carry out signal is supplied to the multiplexer **2508**, and the multiplexer's other input is the carry in signal to **2505**. Signal B is used to control the multiplexer causing either the carry out or the carry in of cell **2505** to be passed on the carry in input of the next most significant cell.

Another modification to the standard cell is to include a control input labelled $\overline{\text{ADD}}$ which is supplied by the same control signal that controls the multiplexer signal B. If a logical one is supplied on signal B, then the carry in signal of **2505** is supplied to the carry in signal of the next most significant cell. The presence of a logical one on signal B also inhibits the add function of cell **2505** such that the original address supplied on input A is passed straight through to the output without modification. This has the effect of protecting the address bit associated with the presence of a one on input B. It can be seen that by supplying a number of ones to the control signals of the modified adder, the carry out of a cell from the least significant bit can be propagated a number of cells along the length of the adder before being supplied to the carry in of a cell which will perform the add function. This would be the next most significant cell which had a zero on the $\overline{\text{ADD}}$ control signal. The effect of this is to protect the address contained within the cells which have been bypassed so that a number of bits of the address range have been protected from modification. With reference to the previously described example, by supplying ones on the multiplexer and $\overline{\text{ADD}}$ control signals, an address increment from pixel **15** in memory **0** can be made to pixel **16** in memory **1** so that the memory can be addressed as one continuous address space. The multiplexer control signals are referred to as a sliced mask because they will mask out certain bits from the address range and cause the data which has been distributed in memory to be accessed as a slice indicated in FIG. **24**.

It should be noted that this circuitry is used both for storing adjacent information or for retrieving adjacent information. Also, some information should be provided and stored in the same memory and should not be sliced, and this is denoted by providing all zeros to the ABC leads of the slice mask. When this occurs, the individual adders **2504–2506** act in the same manner as the prior art adders **2501–2503**. It is also important to keep in mind that there are different types of distributed data that should be sliced across several memories and not just pixel information. This would occur anytime when it is conceivable that several processors would be accessing the same type of information at the same time for whatever processing would be occurring at that point.

It is also important to keep in mind that to distribute memory as disclosed in the sliced addressing mode does not

in any way waste memory because the rows B and C which are not used for the particular pixel or other information to be stored would be used for other information. The only "penalty" that conceivably could occur is the additional chip space required to construct the multiplexers and the additional interconnections of the adders. This is a minor penalty to pay for the result of dramatically increased speed of access of memories for parallel processing while still allowing the flexibility of both distributing the adjacent information across many memories and allowing the information to be stored in a single memory under control of an external control. Using this approach, there is no fixed relationship for any particular piece of information so that at various times the information can be distributed across many memories or the same information at different times can be stored in the same memory depending upon the use of the information.

For example, if information which at one time is sliced because it is being used in a parallel processing mode is later determined to be used for a single processor for a single period of time, it would be advantageous to provide all zeros on the slice mask for that time period thereby storing the information in a single memory so that a single processor can then access the single memory, in this way again gaining valuable time over the slice method. This then gives a high degree of flexibility to the design of the system and to the operational mode for storing data.

Turning now to FIG. **27**, an example of the way in which a typical quantity of pixels may be distributed over a number of memories is shown. In this example each individual memory is two kilobytes in size, and the start and end addresses of each of these memories are indicated. For example, memory **0** begins at address all zeroes and finishes as address **07**FF. Memory **1** begins at 0800 and ends at 0FFF and so on through to memory **7** which begins at 3800 and ends at 3FFF. A quantity of pixels are shown distributed in a slice across these memories, 64 pixels per memory. Consider for a moment stepping through the 64 pixels within the slice of memory **3**. We can see that the pixels are arranged from addresses **1900–193**F. The next adjacent piece of information is not resident at the next address **1940** because the information was distributed over the memory system in a sliced manner. This means that the next piece of contiguous information is at address **2100** in memory **4**. The prior art method of addition, as shown in FIG. **27**, would add an index of one onto the address **193**F to produce the address **1940**. As previously mentioned, this is not the next piece of information required which is resident in the next memory at **2100**. With reference to the bottom of the figure where the operation of addition using sliced arithmetic is shown, we can see that the value **193**F is represented in binary form, and beneath that is the slice mask information similarly in binary form. As previously described, the presence of ones within the slice mask causes the carry out from an individual adder cell to be passed further along the carry path than the next most significant adjacent cell. In this example five adder cells are bypassed by the carry signal because there are five contiguous ones within the slice mask. Thus, when the index of one which is supplied to the B inputs of the modified adder is added to the value of **193**F supplied to the A inputs of the modified adder, the carry out from the sixth least significant bit bypasses the seventh through eleventh significant bits and is passed into the carry in input of the twelfth least significant bit. This has the effect of incrementing those bits of the address including the twelfth and beyond significant bits which, because each memory is two kilobytes in size, has the effect of incrementing to the required address **2100** in the next memory.

Reconfigurable Memory

Before beginning a detailed description of how the MIMD/SIMD operational modes change the reconfigure of the memory, it would be good to review FIG. **4** with respect to the processors' memory and crossbar interconnections thereof. It will be recalled that in the MIMD mode the various processors each obtain their instructions from a separate memory. Thus, in the embodiment shown, processor **100** is connected over its instruction vertical through crosspoint **19-7** to instruction memory **10-1**. Crosspoint **19-7** is normally closed except when the transfer processor is accessing the instruction memory in which case a signal is provided to crosspoint **19-7** to control the crosspoint and turn the crosspoint off.

In similar manner, processor **101** is connected via its instruction vertical and crosspoint **14-7** to instruction memory **10-5**. Processor **102** is connected via its instruction vertical through crosspoint **9-7** to instruction memory **10-9** while processor **103** is connected via its instruction vertical through crosspoint **4-7** to instruction memory **10-13**. This is the arrangement for the memory processor configuration when the system is in the MIMD operational mode.

When all or part of the system is switched to the SIMD operational mode, it is desired to connect memory **10-1** to two or more of the processors or to a group of processors depending upon whether both SIMD and MIMD are operating together or SIMD is operating on just a group of processors. In the embodiment shown we will assume that the SIMD operation is with respect to all four processors **100–103**. In this case instruction memory **10-1** is connected to processor **100** via crosspoint **19-7** and three state buffer **403** is activated along with crosspoint **14-7** to connect memory **10-1** directly to the instruction vertical of processor **101**. In similar manner three state buffers **402** and **401** are both operated to connect memory **10-1** to the respective instruction verticals of processors **102** and **103**, via crosspoints **9-7** and **4-7**, respectively.

At this point the system is constructed so that all of the processors **100–103** are operating from a single instruction stream provided from memory **10-1**. Memories **10-5**, **10-9** and **10-13**, which were used for instructions in the MIMD mode, are now free to be used for other purposes. To increase memory capacity, at least on a temporary basis, these memories become available for access by all of the processors. The precise manner in which this is all accomplished will now be discussed.

Turning now to FIG. **28**. Register **2820** contains the current operating mode of the system. This register contains bits which indicate whether the system is MIMD, SIMD, or some combination (hybrid) of SIMD and MIMD. From this register two signals are supplied, one indicating MIMD, the other SIMD. While the embodiment shows one pair of signals, in actual practice an individual pair of signals for each processor could be supplied. These signals are routed to the crosspoints and three state buffers to select the appropriate instruction streams for the appropriate configurations. In the MIMD configuration, processors **101**, **102** and **103** are each executing their own instruction streams. These instruction streams are pointed to by program counters **2811**, **2812** and **2813**, respectively. These program counters are supplied to the cache logics **2801**, **2802** and **2803**, respectively. These have the effect of indicating if the instructions pointed to by the program counter are currently resident in the memory modules **10-5**, **10-9** and **10-13**, respectively. If the instructions indicated by the program counter are present, then the MIMD instruction address is output from the cache logic to the respective memory, and the appropri-

ate instruction stream fetched back from that memory on the instruction vertical to the respective processor. If the instructions are not present within memory at this time, then the instruction execute will cease, and with reference to FIG. **4**, crosspoints **13-0**, **8-0** or **3-0** may be made to the transfer processors' bus. These are used by the respective processors for communicating the external address of the instructions required to be executed, and also the place within the instruction memory **10-5**, **10-9** or **10-13**, respectively, where the next sequence of instructions are to be stored. Once the transfer processor has fetched these instructions, an acknowledged signal is passed to the parallel processors from the transfer processor indicating that the code has now been fetched. The parallel processor can then perform instruction execution, again from the memory until such occasion as the instruction stream is found to be absent and the process is again repeated.

In the SIMD configuration because processors **101**, **102** and **103** are executing from the same instruction stream, the cache logics **2801**, **2802** and **2803** within the processors are disabled because they perform no function. The program counters **2811**, **2812** and **2813** contents are irrelevant because they perform no purpose in fetching instructions because in the SIMD configuration all instructions are fetched by processor **100**. In the SIMD configuration, therefore, it is desirable to use memories **10-5**, **10-9** and **10-13** for storing data. In order to do this, crosspoints **14-1** through **14-6**, **9-1** through **9-6** and **4-1** through **4-6** are enabled, thus allowing those memories to be accessed by the processors for data. This means that the memory utilization in the system is maintained at its optimum level for both SIMD and MIMD configurations.

Imaging Personal Computer

The imaging personal computer (PC) shown in FIGS. **46–52**, can be constructed of three major elements, a camera sensing device **4600**, shown in FIG. **46**, an imaging processing device **4602** and a display device **4801** (FIG. **48**). The imaging PC is not restricted to the use of a camera **4600** or a display **4803** and many forms of image input/output can be used.

Camera **4600** could be focused in front of display device **4803** of the PC and a hand **4603** can be used to input information by "signing" as typically done for deaf communication. The "signing" could be observed by the camera, and the screen could be used to display either the sign "two" or can be used to further process the information as discussed previously with respect to FIG. **11**. The output bus from the PC could also contain the digital representation of the information being input via camera **4600**, in this case the binary bits representing two. Thus, the user could utilize spreadsheets and other information obtaining information both from a keyboard or other traditional manner in ASCII (American standard code for information interchange) code as well as from a visual or video source such as camera **4600** or video recorder device or any other type of video input using an imaging code input. The video input can be recorded on tape, on disc or on any other media and stored in the same manner as information is currently stored for presentation to a PC.

Some of the features that an imaging PC can have are 1) acquiring images from cameras, scanners and other sensors; 2) understanding the information or objects, in a document; 3) extracting pertinent information from a document or picture; 4) navigating through a data base combining images as well as textual documents; 5) providing advanced imaging interfaces, such as gesture recognition.

The PC can be used to create instant data bases since the information put into the system can be read and the informational content abstracted immediately without further processing by other systems. This creates a data base that can be accessed simply by a match of particular words, none of which had been identified prior to the storage. This can be extended beyond words to geometric shapes, pictures and can be useful in many applications. For example, a system could be designed to scan a catalog, or a newspaper, to find a particular object, such as all of the trees or all of the red cars or all trucks over a certain size on a highway. Conceptually then, a data base would be formed by words, objects, and shapes which the image processor would abstract and make useful to the user.

One use of such a PC with imaging capability is that both still and moving pictures and video can be integrated into a system or into any document, simply by having the picture scanned by the PC. The information then would be abstracted as discussed with respect to FIG. **11**, and the output made available to the imaging PC for further processing under control of the user.

One of the reasons why so much imaging capability is available under the system shown is that the single chip contains several processors working in parallel together with several memories, all accessible under a crossbar switch which allows for substantially instantaneous rearrangement of the system. This gives a degree of power and flexibility not heretofore known. This then allows for a vast increase in the amount of imaging processing capability which can be utilized in conjunction with other processing capability to provide the type of services not known before. Some examples of this would be restoration of photographs and other images, or the cleaning of facsimile documents so that extraneous material in the background is removed yielding a received image as clear or clearer than the sending image. This entire system can be packaged in a relatively small package mainly because of the processing capability that is combined into one operational unit. Bandwidth limitations and other physical limitations such as wiring connections, are eliminated.

An expansion of the concept would be to have the imaging PC built into a small unit which can be mounted on a wrist and the large video display replaced by a small flat panel display so that the user can wave a finger over top of the display for input as shown in FIG. **46**. The imaging system, as previously discussed, would recognize the various movements and translate the movements into an input. This would effectively remove the problems of keyboards and other mechanical input devices and replace them with a visual image as an input. The input in this case could also be a display, serving a dual purpose. This then makes optical character recognition an even more important input tool than as presently envisioned.

FIG. **47** shows the binary output code of two as determined from the image of the two fingers under control of the imaging PC and the algorithms of FIG. **11** implemented by the structure of FIGS. **1** and **2**.

FIG. **48** shows a remote transmission system using the imaging PC.

FIGS. **49–52** show various implementations of an image system processor PC with various applications. For example, FIG. **49** shows a personal desk top imaging PC which has multiple input and output devices. As shown, an object or document for copying **4908** would be imaged or sensed with optics **4907** and CCD (charged coupled device) **4906**. This sensed information is then converted from analog to digital information with A/D data acquisition unit **4904** which provides sensed digital information for the ISP imaging system processor **4900**.

Controller engine **4905** provides the necessary timing signals to both CCD unit **4906** and print assembly **4909**. This print assembly will provide documents **4910**. Another input or output capability would be a telephone line shown by modem **4901** providing communication to other units. Control console **4902** could consist of a keyboard, mouse or other imaging devices previously described. LCD (liquid crystal display) or CRT (cathode ray tube) display **4903** would be used for providing information to the user. Display **4903** and ISP and memory **4900** and element **4909** are connected by an image information bus, which contains data of images which have been processed.

FIG. **50** describes an imbedded application of the image system processor **5000**. In this case images are sensed again via CCD's **5004** or other sensors which collect information from the world, such as the presence of an intruder in a security application. This information is placed in a frame buffer or VRAM **5003** which is the external memory for the image system processor **5000**. Alternatively, the ISP can be used as a pattern (or person) recognizer and output control information fed to latch **5008**. This information would be used to control a mechanism **5009**, such as a door lock or factory process or the like. Also, the output from latch **5008** could be presented to output display **5010**. The program or instructions have been previously stored in an optical disc **5001** or a hard drive **5002**. These devices can also be used to store incidences of information such as again in a security application, the image of an intruder. The statistical accumulated record keeping **5007** maintains system status or occurrence of events which have occurred.

FIG. **51** depicts a handheld imaging PC. In this case the image system processor **5106** accepts input from two charge couple devices **5105** which provide position input which is then processed to extract user supplied gestures and control of the PC. The position and orientation of the user's hand or pseudo pen would then be used to control the device or in conjunction with the ISP to extract meaningful messages or characters. Flat panel display **5104** provides an output information display of this handheld PC. Optionally, an external camera **5103** would allow the user to collect images outside of the scope of the handheld PC's memory. A host or printer port would also be provided to allow the user to download or print information contained in the handheld PC.

FIG. **52** describes an application of the ISP in a network configuration with a host **5205** which provides necessary image information collected off-line either remotely or in some central office and then distributed to buffer **5201** which is then used by the imaging PC configuration to provide information to the image system processor **5200**. An alternative method of obtaining information is via scanner **5207** working in conjunction with front end processor **5206**. This reduced cost version of the imaging PC (with respect to FIG. **49**) would permit the resource sharing by networking image collection devices. A printer port would also be provided via printer interface **5203** and its connection to printer mechanism **5204** which would allow the user to print the compound documents which contain the normal textual and graphic information in addition to images or enhanced images via the image system processor.

The compact structure of the image processing system, where all of the parallel processing and memory interaction is available on a single chip coupled with a wide flexibility of processor memory configurations and operational modes, all chip controlled, contributes to the ability of the imaging PC to accept image data input as well as ASCII input and to allow the two types of data to be simultaneously utilized.

Ones Counting Circuit

FIG. **53** shows an imaging system **5310** operable to process image data using combinations of various processing algorithms. An imaging device **5312**, such as a video camera, a still image camera, a bar code reader and the like, is used to capture images and provides them to an image data memory **5314**. The captured images are stored in image data memory **5314** until they are accessed by an image processor **5316** addressed by an address generator **5318**. Image processor **5316**, such as the processor shown in FIGS. **1** and **2**, performs signal processing functions including statistical processes on the image data, such as histograms. A ones counting circuit **5320** is provided to generate a count of the number of "ones" in the image data. Information, such as the number of "ones" along a projection line in the image data, is used to provide a statistical analysis of the image data, which may be used for pattern recognition. The histogram of the image data may be compared to predetermined image patterns to recognize a pattern match. An output device **5322** is coupled to image processor **5316** and is available for displaying any output of imaging system **5310**. The output device **5322** may be a monitor or a hard copy generating device.

It should be understood that the overview of the imaging system **5310** described above provides an example of an environment in which the present invention may advantageously operate, and the description above in no way limits the applicability of ones counting circuit **5320**.

Referring to FIG. **54**, a logic gate level implementation of a ones counting circuit **5320** is shown. The ones counting circuit **5320** consists of a matrix **5424** having M number of rows and N number of columns of count cells **5426***a* through **5426***l*, where M is equal to three and N is equal to four in the embodiment shown in FIG. **54**. For an input binary string of $X_n$ number of bits, M may be determined by:

$$M=\log_2 (X_n+1)$$

rounded up to the nearest integer, and N may be determined by:

$$N=X_n.$$

The matrix **5424** receives a binary string denoted by X, and produces a binary number denoted by Y, indicative of the number of "ones" in the binary string. Another output, denoted by Z, is used in a minimized ones counting circuit matrix, to be discussed in detail below.

Each count cell **5426***a* through **5426***l* in matrix **5424** includes an AND gate **5428** and an XOR gate (exclusive-OR) **5430**. For example, count cell **5426***a* includes an AND gate **5428***a* coupled to an XOR gate **5430***a*. An AND gate, such as AND gate **5428***a*, performs an AND function in which the output is equal to a logic level "one" if, and only if, all of the inputs are of logic level "one." AND gate **5428***a* includes inputs **5432***a* and **5434***a*, and an output **5436***a*. Therefore, output **5436***a* becomes a "one" if the logic level on inputs **5432***a* and **5434***a* are both "ones," and output **5436***a* is a "zero" if one of the inputs is a "zero."

An XOR gate generates a logic level "one" at an output only if an odd number of "ones" are present at its input. For example, XOR gate **5430***a* will produce a "one" at output **5438***a* if a "one" is present at only one of its inputs **5440***a* and **5442***a*.

In count cell **5426***a*, like all other count cells in matrix **5424**, AND gate **5428***a* is coupled to XOR gate **5430***a*. Input **5432***a* of AND gate **5428***a* is connected to input **5440***a* of XOR gate **5430***a*. Input **5434***a* of AND gate **5428***a* is

connected to input **5442***a* of XOR gate **5430***a*. Thus, arranged in this manner, AND gate **5428***a* receives the same inputs as XOR gate **5430***a*.

Count cells **5426***a* through **5426***l* are arranged in rows and columns in matrix **5424**. The interconnections of count cells **5426***a*, **5426***b* and **5426***e* will be used to illustrate the interconnections of the whole matrix **5424**. As shown in FIG. **54**, count cell **5426***a* is arranged to be left of count cell **5426***b* and above count cell **5426***e*. Count cell **5426***a* is connected to count cell **5426***b*, where output **5438** of XOR gate **5430** of count cell **5426***b* is connected to inputs **5432***a* and **5440***a* of count cell **5426***a*. Count cell **5426***a* is connected to count cell **5426***e*, where output **5436** of AND gate **5428** of count cell **5426***e* is connected to both input **5434***a* of AND gate **5428***a* and also input **5442***a* of XOR **5430***a* gate of count cell **5426***a*. The interconnections just described may be expanded to the whole matrix by using the connection between count cells **5426***a* and **5426***e* for inter-row connections and the connection between count cells **5426***a* and **5426***b* for inter-column connections. It is appropriate to note that matrix **5424** may be implemented with the rows as the columns and vice versa, and the matrix itself transposed without departing from the teachings of the present invention.

In order to further describe the structure of matrix **5424**, the following convention will be used when referring to the rows and columns: rows have row numbers zero through (M−1), and columns have column numbers zero through (N−1), where the bottommost row is row zero and the right most column is column zero. In the example shown in FIG. **54**, M is three and N is four. Furthermore, references may be made to a count cell at a position (x,y). The coordinates x and y indicate the column number and row number, respectively, of a count cell. For example, count cell **5426***a* is at position **(3,2)**.

Accordingly, matrix **5424** comprises interconnected count cells **5426***a* through **5426***l* arranged in rows and columns where row zero receives the binary string X, row one receives the AND gate outputs of row zero, and row two produces output Z. Column-wise, column zero receives "zeros" from any source to begin the propagation, column one receives the XOR gate output of row zero, column two receives the XOR gate output of row one, and column three produces output Y indicative of the number of "ones" in binary string X. The logic level "zero" received by column zero may be produced by hardwiring the inputs to ground.

For the purpose of illustration, a binary string **1101** ($X_3$=1, $X_2$=1, $X_1$=0, $X_0$=1) is received by row zero of matrix **5424**. AND gate **5428** of count cell **5426***l* produces a "zero" at its output, and XOR gate **5430** of count cell **5426***l* produces a "one" at its output. The logic level "one" from XOR gate **5430** of count cell **5426***l* is propagated down row zero, and the outputs of the XOR gates of each cell toggles each time there is a "one" in the corresponding X input. Therefore, the output of XOR gate **5430** of count cell **5426***k* remains at logic level "one," the output of XOR gate **5430** of count cell **5426***J* toggles to a "zero," and the output of XOR gate **5430** of count cell **5426***i* toggles again to a "one." This produces a "one" at the output of row zero, which makes $Y_0$ equal to "one."

In row one, the XOR gates toggle their outputs in a similar fashion. The output of XOR gate **5430** count cell **5426***h* is a "zero," having received a "zero" from AND gate **5428** of count cell **5426***l*. The output of XOR gate **5430** of count cell **5426***g* remains at logic level "zero," having received "zeros" from both XOR gate **5430** of count cell **5426***h* and AND gate **5428** of count cell **5426***k*. Subsequently, the output of XOR gate **5430** of count cell **5426***f* toggles to a "one," having received a "zero" from XOR gate **5430** of count cell **5426***g* and a "one" from AND gate **5428** of count cell **5426***j*. The output of XOR gate **5430** of count cell **5426***e* is a "one", having received a "one" from XOR gate **5430** of count cell **5426***f* and a "zero" from AND gate **5430** of count cell **5426***i*. As a result, a "one" is produced at the output of row one, which makes $Y_1$ equal to "one."

In row two, the output of XOR gate **5430** of count cell **5426***d* is a "zero," having received the hardwired zero and another "zero" from AND gate **5428** of count cell **5426***h*. The output of XOR gate **5430** of count cell **5426***c* remains at logic level "zero," having received "zeros" from both XOR gate **5430** of count cell **5426***d* and AND gate **5428** of count cell **5426***g*. Subsequently, the outputs of XOR gates **5430** of both count cells **5426***a* and **5426***b* also produce "zeros," which produce a "zero" at the output of row two, making $Y_2$ equal to "zero." Therefore, for the example input binary string X=1101, the output is the binary number Y=011, which is three. Indeed, there are exactly three "ones" in the example binary string input X=1101.

It can be appreciated that the ones counting circuit **5320** is an asynchronous circuit, which receives inputs and generates outputs without requiring clock signals. Thus, in matrix **5424**, an output is available as soon as the inputs are received and the signals are propagated through the matrix. The longest propagation time through the matrix would be the time it takes for the signals to propagate through the longest path which includes count cells **5426***l*, **5426***h*, **5426***d*, **5426***c*, **5426***b*, and **5426***a*.

Matrix **5424** shown in FIG. **54** is rectangular and comprises identical count cells **5426**. These characteristics make the ones counting circuit compact and easily laid out for semiconductor mask production. However, matrix **5424** may be minimized by using fewer count cells and/or fewer gates.

Referring to FIG. **55**, a minimized ones counting circuit matrix **5544** for a four bit binary string input is shown. Matrix **5544** includes interconnected count cells **5546***a* through **5546***e*. For a minimized matrix, the number of rows M, and the number of count cells in each row N, are determined as follows:

$$M=\log_2 X_n$$

rounded up to the nearest integer, and for each row

$$N=X_n-2^r,$$

where $X_n$ is the number of bits in the input binary string X, and r is the row number ranging from zero to (M−1). In the example shown in FIG. **55**, the number of bits $X_n$ of the input binary string X is four. Using the above formulas, the number of rows, M, is equal to two. To calculate for N for the first row, r is equal to zero, which makes N equal to three. For the second row, r is equal to one, which makes N equal to two. Thus, a minimized matrix of three count cells in the first row and two count cells in the second row, totaling five count cells, can compute the number of "ones" in a four bit binary string, as compared with the twelve count cells in the full matrix **5424** (FIG. **54**).

Each count cell **5546***a* through **5546***e* comprises an AND gate **5548** coupled to an XOR gate **5550**, identical to the count cells of the full matrix **5424** shown in FIG. **54**. The binary input string X is received by the inputs to count cells **5546***c* through **5546***e*; the output binary number Y is produced at the outputs of count cells **5546***a* and **5546***c*.

In the example shown in FIG. **55**, $X_3$ is received by the inputs **5552** to AND gate **5548** and XOR gate **5550** of count

cell **5546***c;* $X_2$ is received by the inputs **5554** to AND gate **5548** and XOR gate **5550** of count cell **5546***d.* $X_1$ is received by the inputs **5556** to AND gate **5548** and XOR gate **5550** of count cell **5546***e;* $X_0$ is received by the other inputs **5558** to AND gate **5548** and XOR gate **5550** of count cell **5546***e.*

The most significant bit of the binary number output Y, $Y_2$, is produced at output **5560** of AND gate **5548** of count cell **5546***a.* $Y_1$ is produced at output **5562** of XOR gate **5550** of count cell **5546***a.* The least significant bit $Y_0$ is produced at output **5564** of XOR gate **5550** of count cell **5546***c.*

Because the minimized matrix **5544** is not rectangular, the interconnections between the count cells are modified. In particular, if a count cell at position (x,y) is not present as compared with the full matrix, the count cell in the row immediately "below" it is connected to the input of the XOR gate of the count cell (x+1,y) immediately to the left of the missing cell. If more than one count cell is absent, for example, count cells at positions (x,y) and (x+1,y), then only the output of the AND gate of the count cell at position (x+1,y−1) need to be connected to the input of the XOR gate of the count cell at position (x+2,y). In the embodiment shown in FIG. **55**, the count cells at positions **(0,1)** and **(1,1)** are absent, so the output of AND gate **5548** of the count cell **5546***e* at position **(1,0)** is connected to the inputs of AND gate **5548** and XOR gate **5550** of count cell **5546***b* at position **(2,1)**. Further, the count cell at position **(0,0)** is also absent as compared with the full matrix implementation. The input $X_0$, then, is directly connected to inputs **5558** of AND gate **5548** and XOR gate **5550**, respectively, of count cell **5546***e* at position **(1,0)**. The count cell at position **(3,2)** is also absent, so the output $Y_2$ is directly provided by the output **5560** of AND gate **5548** of count cell **5546***a* at position **(3,1)**.

Using the prior example X=**1101**, where $X_3$=1, $X_2$=1, $X_1$=0, and $X_0$=1, the output of AND gate **5548** of count cell **5546***e* is a "zero," and the output of XOR gate **5550** of the same count cell **5546***e* is a "one." The logic level "one" from XOR gate **5550** of count cell **5546***a* is propagated down row zero and the outputs of XOR gates of each cell toggle each time there is a "one" in the corresponding X input. Therefore, the output of XOR gate **5550** of count cell **5546***d* toggles to a "zero," and the output of XOR gate **5550** of count cell **5546***c* toggles again to a "one." This produces a "one" at the output of row zero, which makes $Y_0$ equal to "one."

In the second row, the output Z of AND gate **5548** of count cell **5546***b* is a "zero," having received a "zero" from AND gate **5548** of count cell **5546***e.* XOR gate **5550** of count cell **5546***b* outputs a "one," having received a "zero" from count cell **5546***e* and a "one" from count cell **5546***d.* XOR gate **5550** of count cell **5546***a* outputs a "one," having received a "zero" from count cell **5546***c* and a "one" from count cell **5546***b.* This produces a "one" at the output of row one, making $Y_1$ equal to "one." In addition, $Y_2$, which is the output of AND gate **5548** of count cell **5546***a*, is a "zero." Therefore, the output binary number is equal to Y=011, indicating that there are three "ones" in the input binary string X=1101.

Matrix **5544** may be further minimized by eliminating some logic gates, such as AND gate **5548** of count cell **5546***b*, shown in broken outline. Since the output Z of AND gate **5548** is not required to assemble output binary number Y, AND gate **5548** can be eliminated. Therefore, in a minimized matrix, AND gates of count cells immediately adjacent to absent count cells in the same row may be removed to further reduce the size of the ones counting circuit.

It can be appreciated that the present invention is not limited in scope to the circuit implementation described and shown herein. In particular, alternative embodiments may include circuit implementations derivable from the present embodiment by Boolean logic as known in the art. For example, an AND gate such as AND gate **5548** may be equally implemented by a NAND gate coupled to an inverter. Furthermore, by De Morgan's theorem as known in the art, an AND function may be implemented by an OR gate with an inverter coupled to its output and with the input signals to the OR gate inverted. Such alternate circuits derivable from the present embodiment are within the scope of the invention.

Referring now to FIG. **56**, an example application in character recognition of the present invention is shown. A matrix of pixels **5666** consists of "zeros" and "ones" forming a letter "F." The pixels **5666** may be gathered by an aforementioned imaging device and stored in an image data memory. The matrix of pixels **5666** is processed row-wise and column-wise to generate row counts **5668** and column counts **5670** of the number of "ones" present in each row and column, respectively. The row counts **5668** are generated by providing each row of the pixel matrix **5666** as binary string input X to the ones counting circuit. Thus, a count of the number of "ones" of each row is generated. In the example shown in FIG. **56**, the capital letter "F" has no "one" pixels in the first two rows. In row three, there are four "ones" forming the first horizontal line in the letter. In row four, there is only one "one". Row five has three "ones" which form the second horizontal line in the letter "F." In each of rows six and seven, there is one "one".

Similarly, column counts **5670** are generated by providing each column of the pixel matrix **5666** to the input of the ones counting circuit. Columns one and two contain no "ones." In column three, there are five "ones" forming the vertical line in the letter "F." In column four, there are two; in column five, there are also two; in column six, there is one; and in columns seven and eight, there are none.

Therefore, the row counts and column counts of all characters and any image pattern may be generated and stored as histograms in a pattern recognition system, so that they may be used as a standard for comparison against new character image samples.

While the preferred embodiment of the present invention counts the number of "ones" in an input binary string, it is conceivable to implement a "zero" counting circuit operable to count the number of "zeros" in a binary string in an alternate embodiment by adding inverters at the input of the ones counting circuit matrix. Such a "zero" counting circuit is an alternate embodiment and is within the teachings of the present invention.

Although the present invention has been described in detail, it should be understood that various changes, substitutions and alterations can be made hereto without departing from the spirit and scope of the invention as defined by the appended claims.

PROCESSOR DETAILS

The following discussion pertains to the master processor, the parallel processors, and the transfer processor as detailed in FIGS. **29–45**. While not necessary for an understanding of the operation of the invention claimed, this discussion may be helpful to give a specific embodiment of many such embodiments. The precise system used will depend upon the system requirements and can, in fact, vary substantially from the following discussion.

Parallel Processor

Master Processor

Turning now to FIG. **29**, we can look at workings of master processor **12** which serve to control the operation of the entire image system processor including controlling the synchronization and other information flowing between the various parallel processors. Master processor **12** executes instructions which can be 32 bit words having opcodes controlled by opcode circuit **2911** and register file **2901**. Program counter **2903** operates under the control of control logic **2904** to control the loading of instructions from bus **172** into opcode register **2911**. Control logic **2904** then decodes the instruction and controls the operation on master processor **12** based on the information presented.

In addition to integer execution unit (ALU-arithmetic logic unit) **2902**, there is a floating point execution unit comprised of two parts. Part one is a floating point multiplier comprised of multiplier **2905**, normalized circuit **2906** and exponent adder **2907**. Part two is a floating point adder comprised of prenormalizer **2908** and arithmetic unit **2909** and postnormalizing shifter **2910**.

Program counter register **2903** is used to provide the address output along bus **171** when it is required to read 32 bit instructions. Acting in accordance with the instructions decoded from opcode register **2911**, integer execution unit **2902** can provide addresses which are output over bus **171** to control the reading of data from a data cache external to the master processor. Data is returned over the data part of bus **171** and stored in register file **2901**.

The Instruction bus **172** and data bus **171** each consist of an address part and a data part. For instruction bus **172**, the address part comes from the program counter **2903** and the data part is returned to opcode register **2911**. For data bus **171**, the address part comes from the output of the integer ALU **2902** and the data either comes from register file **2901** if it is a write cycle or is returned to register file **2901** if it is a read cycle.

The manner in which the various elements of master processor **12** interact with each other are well-known in the art. One example of the workings of a graphics processor is shown in copending U.S. patent application of Karl Guttag, David Gulley, and Jerry Van Aken, entitled "Graphics Processor Having a Floating Point Coprocessor", Ser. No. 387,472, filed Jul. 28, 1989, which application is hereby incorporated by reference herein.

Parallel Processor Operation

The four processors **100–103** shown in FIGS. **1** and **2** (abbreviated PP herein) perform most of the system's operations. The PP's each have a high degree of parallelism enabling them to perform the equivalent of many reduced instruction set computer (RISC)-like operations per cycle. Together they provide a formidable data processing capability, particularly for image and graphics processing.

Each PP can perform three accesses per cycle, through the crossbar switch to the memory, one for instructions and two for data. A multiply and an ALU operation can also be performed by each PP every cycle, as well as generating addresses for the next two data transfers. Efficient loop logic allows a zero cycle overhead for three nested loops. Special logic is included for handling logical ones, and the ALU is splittable for operating on packed pixels.

As discussed previously, to allow flexibility of use, the PPs can be configured to execute from the same instruction stream (Single Instruction Multiple Data (SIMD) mode) or from independent instruction streams (Multiple Instruction Multiple Data (MIMD) mode). MIMD mode provides the capability of running the PPs together in lock-step allotting for efficient synchronized data transfer between processors.

In order to relieve the programmer of the worries of accidental simultaneous access attempts of the same memory, contention prioritization logic is included in the crossbar, and retry logic is included in the PPs.

All the PPs **100–103** are logically identical in design, but there are two differences in their connections within the system. Firstly, each PP will be supplied with a unique hardwired two-bit identification number that allows a program to generate PP specific information such as addresses. The other difference is that when configured as SIMD, one PP **100** will act as the "master" SIMD machine and will perform the instruction fetches on behalf of all the PPs. The other PPs **101–103** will act as "slave" machines simply executing the provided instruction stream.

Internal Interfaces

As shown in FIG. **30**, each PP **100–103** connects to the rest of the system via a number of interfaces, such as instruction port **3004**, global port **3005** and local port **3006**, as well as an interprocessor communication link **40**.

Instruction port **3004** is connected to its own instruction RAM **10-1** (**10-5**, **10-9** or **10-14**) in the MIMD mode or connected to the other PP's instruction buses in the SIMD mode. Only the "master" SIMD PP **100** will output addresses onto its instruction bus when configured as SIMD. Instruction port **3004** is also used to communicate cache-miss information to transfer processor **11**.

Global port **3005** is attached to the PP's own dedicated bus that runs the length of the crossbar. Via this bus the PP can reach any of the crossbar'd RAMs **10**. Data transfer size is typically 8, 16 or 32 bits. A contention detect signal **3210** ( FIG. **32**) associated with this port is driven by the crossbar logic, indicating when a retry must be performed.

Local port **3006** is similar in function to global port **3005**, but it may only access the four crossbar'd RAMs physically opposite each PP. In SIMD mode however it is possible to specify a "common" read with the four local PP buses **6** series connected, allowing all (or some subset of) PPs to be supplied with the same data (from one RAM **10-0**, **10-2**, **10-3** or **10-4**). In this situation only the "master" SIMD PP **100** will supply the address of the data.

In MIMD configuration, there is the capability to execute PP programs in lock-step. The programmer indicates these sections of code by bounding them with LCK and ULCK instructions. Four signals **3020**, one output by each PP, are routed between the PPs indicating when each is in this section of code. By testing these signals the PPs can execute code synchronously.

As mentioned above, global ports **3005** and local ports **3006** have signals **3210** and **3211** (FIG. **32**) to know when contention has occurred and a retry is required. When configured in SIMD mode, it is essential that all PPs pause instruction execution until all contentions have been resolved. There is thus a signal **3007** running between all PPs which is activated when any PP detects contention. The next instruction is only loaded by the PPs when this signal becomes inactive. This signal is also activated when the "master" SIMD PP **100** detects a cache-miss. In MIMD configuration signal **3007** is ignored.

In SIMD configuration stack coherency between the PPs must be maintained. When performing conditional calls, a signal **3008** is required therefore from the "master" SIMD PP **100** to the "slave" SIMD PPs **101–103** that indicates that the condition was true and that the return address should be pushed by the "slave" PPs **101–103**.

Another time when SIMD stack coherency must be maintained is when interrupts occur. In order to achieve this there is a signal **3009** which is activated by the "master" SIMD PP

100 which is observed by the "slave" PPs 101–103. All PPs 100–103 will execute the interrupt pseudo-instruction sequence when this signal is active.

Another SIMD interrupt-related signal 3010 indicates to the "master" PP 100 that a "slave" PP 101–103 has an enabled interrupt pending. This allows "slave" PPs 101–103 to indicate that something has gone wrong with a SIMD task, since "slave" PPs 101–103 shouldn't normally expect to be interrupted.

A number of interrupt signals 3011 are supplied to each PP. These allow a PP to be interrupted by any other PP for message-passing. Master processor 12 can similarly interrupt a PP for message-passing. The master processor can also interrupt each PP in order to issue them with new tasks. In SIMD the interrupt logic in the "slave" PPs 101–103 must remain active for stack consistency and interrupts are handled slightly differently. This is discussed later.

The PP indicates with a signal 3012 to the transfer processor when a packet request is required. The transfer processor indicates when a packet request has been serviced with another signal 3013. In SIMD configuration only the "master" PP 100 will output packet requests to the Transfer Processor.

Internal Structure

The bus structure of a PP is shown in FIG. 30. There are three main units within the PP. These are the program flow control unit 3002, the address unit 3001 and the data unit 3000. Each of these will now be discussed.

Program flow control (PFC) unit 3002 shown in FIG. 31 contains the logic associated with the program counter 3100, i.e., the instruction cache control 3101, the loop control 3102, the branch/call logic (RET) 3103 and the PP synchronization logic 3104. This logic controls the fetching of opcodes from the PP's instruction RAM 10-1, 10-5, 10-9 or 10-14. When a cache-miss occurs, it also communicates the segment address and the sub-segment number to the transfer processor so that the code can be fetched.

Instruction pipeline 3105 is in the PFC Unit 3002. The PFC unit 3002 will therefore generate the signals 3112 necessary to control the address unit 3001 and data units 3000. The immediate data specified by certain opcodes are also extracted from the instruction pipeline and routed to the data unit as required.

Interrupt enable 3107, interrupt flags 3106 and interrupt vector address generation logic is also in the PFC unit 3002. This prioritizes the active interrupts and injects a sequence of pseudo instructions into the pipeline 3105 to read the vector, save the program counter 3100 and the status register 3108, and branch to the interrupt routine.

Packet request handshake signals 3012 and 3013 will also connect to the PFC unit 3002.

The PFC unit is the part of the PP whose behavior differs between PPs when configured in SIMD mode. The "master" SIMD PP 100 will behave more-or-less normally, but the "slave" PPs 101-103 will disable their cache logic 3101 and flush the present flags 3109. Their loop logic 3102, synchronization logic 3104 and packet request signals 3012 and 3013 are also disabled. The interrupt logic behavior is modified so that all PPs can behave identically.

Address unit 3001 shown in FIG. 32 contains two identical subunits 3200 and 3201 each capable of generating a 16-bit byte address of a data location in the crossbar'd RAM 10. Within each subunit are four address registers 3202/3222, four index registers 3203/3223, four qualifier registers 3204/3224, a modulo register 3205/3225 and an ALU 3206/3226. When two parallel data accesses are specified in the opcode, subunit 3200 outputs the address through global port 3005 and the other subunit (3201) through the local port 3006. When only one access is specified, then this address can come from either subunit 3200 or 3201, unless a single common SIMD read is specified, in which case it is required to come from the "local" subunit 3201.

Address unit 3001 also supports retries if contention is detected on either, or both, global 3005 and local buses 3006.

Addressing modes are pre- and post-indexing, by a short immediate or an index register, with or without address register modify. The address(es) can be further qualified to be in data or I/O (input/output) space, with or without power-of-2 modulo, with or without bit-reversed addressing, and a common SIMD read.

Address unit 3001 also controls the aligner/extractors 3003 (FIG. 30) on global and local ports 3005 or 3006. These are essentially byte multiplexers that allow the transfer of bytes, half-words or words over the crossbar to/from the RAMs 10. They also allow non-aligned (but byte aligned) half-words or words to be loaded or stored. Sign extension of loads is also provided if required.

Data unit 3000 (shown in FIG. 33) contains 8 multi-port data registers 3300, a full 32-bit barrel shifter 3301, a 32-bit ALU 3302, left-most-1 right-most-1 and number-of-1s logic 3303, divide iteration logic and a 16×16 single-cycle multiplier 3304. Various multiplexers 3305–3309 are also included for routing data.

Special instructions are included to allow multiple pixel arithmetic operations. The ALU 3302 is splittable into 2 or 4 equal pieces upon which adds, subtracts and compares can be performed. These operations can be followed with a merge operation that allows saturation, min, max and transparency to be performed. This same logic also facilitates color expansion, color compression and masking operations.

All data unit instructions execute in a single cycle and are register-to-register operations. They all allow one or two separately coded loads or stores from/to crossbar'd memory 10 to be performed in parallel with the data unit operation. If an immediate is specified then this replaces the parallel moves in the opcode. Operations can also be performed on registers other than the 8 data registers 3300, but, as with immediates, the parallel moves cannot be specified in this case.

Bus Structure

As can be seen from FIG. 30, there are four buses 3014–3017 which run the length of the PP data path. These are used for all the data movement, and are a compromise between the number of buses (and read and write ports of registers) and the allowed sources and destinations for data unit operations.

The left-most bus 3014 carries the 16-bit immediates (after left/right justification and sign-extension) to data unit 3000. This is also used to load immediates by passing them through ALU 3302 then out onto the register write bus 3016.

The next bus from the left 3015 carries any address unit 3001 or PFC unit 3002 register source to the data unit 3000. It is also used to carry the source data of stores going to memory 10 on global port 3005. It also carries the source of a register-to-register move occurring in parallel with an ALU operation.

The next bus 3016 is used by loads from memory 10 on global port 3005 to any register, and by the results of a data unit operation to be written to any register. This bus carries a latch 3018 which is used temporarily for holding load data when the pipeline pauses through contention, synchronization or cache-misses.

The right-most bus 3017 is used entirely by the Local port 3006 for loads and stores of data unit registers 3300 from/to

memory **10**. This bus cannot access any registers other than the data unit's registers **3300**. This bus carries a latch **3019** which is used temporarily for holding load data when the pipeline pauses through contention, synchronization or cache-misses.

Pipeline Overview

The PPs' pipelines have three stages called fetch, address and execute. The behavior of each pipeline stage is summarized below:

FETCH: The address contained in program counter **3100** is compared with the segment registers **3110** and present flags **3109** and the instruction fetched if present. PC **3100** is post-incremented or reloaded from the loop start address **3111**. If MIMD synchronization is active, then this allows/inhibits the instruction fetch.

ADDRESS: If the instruction calls for one or two memory accesses, then the address unit **3001** will generate the required address(es) during this stage. The five most-significant bits of the address(es) are supplied to crossbar **20** for contention detection/prioritization.

EXECUTING: All register-to-register data unit **3000** operations and any other data movements occur during this stage. The remaining 11 bits of crossbar address(es) are output to the RAMs **10** and the data transfer(s) performed. If contention is detected, then this stage is repeated until it is resolved. If the PC **3109** is specified as a destination (i.e., a branch, call or return) then the PC **3100** is written to during this stage, thus creating a delay slot of two instructions.

MEMORY

Each PP accesses three separate memory spaces,

64 M bytes of off-chip word-aligned code space. (From on-chip cache).

64 K bytes of on-chip crossbar'd memory **10**. This is referred to as data space.

64 K bytes of on-chip I/O space in which resides the Parameter RAMS, the message registers and the semaphore flags.

The I/O spaces for each PP **100–103** are isolated from each other so that code need not calculate addresses unique to each PP when accessing I/O space. Thus each PP sees its own parameter RAM at the same logical address. The same applies for the message registers and semaphore flags. The master processor, however, can uniquely address each PP's I/O space.

The 64 K bytes of memory is for one embodiment only and any expansion or modification can be made thereto.

Program Flow Control Unit

The logic within program flow control unit **3002**, (FIG. **31**), works predominantly during the fetch pipeline stage, affecting the loading of the instruction pipeline. However since the instruction pipeline is resident in the PFC unit **3002**, it must also issue signals **3112** to the address **3001** and data units **3000** during the address and execute pipeline stages. It also receives signals from address unit **3001** that indicate when contention has occurred, thus pausing the pipeline.

Cache Control

The 512-instruction cache has four segments, each with four sub-segments. Each sub-segment therefore contains 32 instructions. There is one present flag **3109** for each sub-segment. Since program counter **3100** is 24 bits, the segment registers **3110** are each 17 bits. The instruction opcodes are 32-bits wide.

The 9-bit word address used to access the instruction RAM is derived from the least-significant 7 bits of program counter **3100** and two bits from the segment address compare logic **3113**. This compare logic must work quickly so as to avoid significantly delaying the RAM access.

If the most-significant 17 bits of program counter **3100** are not matched against one of the segment address registers **3110**, then a segment-miss has occurred. The least recently used segment is chosen to be trashed by logic **3114**, and its sub-segment present flags **3109** are cleared. If, however, the most-significant 17 bits of the Program Counter **3100** are matched against one of the segment address registers **3110** but the corresponding sub-segment flag **3109** is not set, then a sub-segment miss has occurred.

If either type of cache-miss occurs, the pipeline is paused, and a cache-miss signal **3115** sent to transfer processor **11**. When a cache-miss acknowledge signal is supplied by the TP **11**, the most-significant 17 bits of the PC **3100**, and the **4** bits representing the sub-segment to be filled are output onto the TP's bus. (This requires a crossbar connection **0-3**, **0-8**, **0-13** or **0-18** between the PP's instruction bus, horizontal **7**, and the TP's bus, horizontal **0**). The TP's acknowledge signal **3115** is then deactivated. When the sub-segment has been filled by TP **11**, a cache-filled signal **3115** is sent to the PP which causes the appropriate sub-segment present flag **3109** to be set, deactivates the PP's cache-miss signal **3115**, and instruction execution recommences.

If the PP is interrupted at any time while waiting for a cache-miss request to be serviced, the cache miss service is aborted. This prevents needless fetches of unwanted code.

In SIMD configuration the present flags **3109** of the "slave" PP's **101–103** will be held cleared and the cache logic **3101** ignored. The "slave" PP's **101–103** will load instructions (supplied by the "master" PP **100**) into their pipeline whenever the SIMD pause signal **3007** is inactive. The "master" PP's cache **3101** behaves normally, but it too will pause its pipeline whenever the SIMD pause signal **3007** is active. (Such a condition will occur if one of the "slave" PPs **101–103** detects contention). In MIMD configuration the SIMD pause signal **3007** is ignored by all processors.

The ability to flush the PPs' caches **3101** can be provided by a memory mapped register accessible by the master processor **12**. This function will clear all the present flags in the PP(s) selected.

Loop Control

Three nested loops that execute with zero cycle overhead are included to allow operations such as convolution to be coded with the appropriate address sequence without speed penalty, rather than using dedicated logic in the address unit **3001**.

There is a multiplicity of registers to support this feature, namely, three 16-bit loop end values **3116–3118**, three 16-bit loop counts **3119–3121**, three 16-bit loop reload values **3122–3124** and one 24-bit loop start address value **3111**. It is a restriction that the three loops have a common start address. This restriction can be removed simply by adding two more 24-bit loop start address registers.

The number of instructions required to load the loop registers **3111** and **3116–3124** is reduced by simultaneously loading loop counter registers **3119–3121** whenever the associated loop reload registers **3122–3124** are written. This saves up to three instructions. When restoring saved loop registers, e.g., after a context switch, the loop reload registers **3122–3124** must therefore be restored before the loop counter registers **3119–3121**.

Within status register **3108**, FIG. **34**, are two bits **(25)** and **(24)** that indicate how many loops are required to be activated. These are called the maximum looping depth (MLD) bits. There are also two bits **(23)** and **(22)**, implemented as a two bit decrementer, that indicate the current depth of looping. These are called the current loop depth

(CLD) bits. These indicate which loop end address register **3116–3118** should be compared with the PC **3100**. These CLD bits will be cleared to zero (no loops active) by reset, and by interrupts once the SR **3108** has been pushed. Loops are numbered **1** to **3** with **1** being the outer-most loop. The user must set the MLD and CLD bits to the desired values in order to activate the loop logic. When all loops have been completed the CLD bits will be zero.

Since the CLD bits are automatically decremented by the loop logic during the fetch pipeline stage, the status register **3108** should not be written to during the last two instructions within a loop.

Once the loop logic **3102** has been activated (by a non-zero value in the CLD bits) the 16-bit loop end address register (one of **3116–3118**) indicated by the CLD bits is compared during each instruction fetch with the 16 least-significant bits of the unincremented PC **3100**. If they are equal and the associated loop counter (one of **3119–3121**) is not 1, then the loop start address register **3111** contents are loaded in the PC **3100**, the loop counter (one of **3119–3121**) is decremented and the MLD bits are copied into the CLD bits.

If, however, the unincremented PC **3100** and loop end address register (one of **3116–3118**) are equal and the relevant loop counter (one of **3119–3121**) is 1, then the CLD bits are decremented by 1, the relevant loop counter (one of **3119–3121**) is reloaded from its associated loop reload register (one of **3122–3124**), and the PC **3100** increments to the next instruction.

Since the loop end address registers **3116–3118** are only 16-bits, this means that loops cannot be more than 64 K instructions long. Care should also be taken if branching or calling out of loops as the 16-bit value of the currently in-use loop end address register (one of **3116–3118**) may be encountered accidentally. Users should set the CLD bits to zero before attempting this to be certain of not having a problem. Loop end address compare is disabled during the two delay slot instructions of a branch or call in order to help returns from interrupts.

Since the loop logic operates during the fetch pipeline stage it is possible to combine looping with MIMD synchronization if desired. Interrupting loops is similarly not a problem. Looping in SIMD is controlled by the "master" **100** SIMD PP's loop logic. The "slave" PPs' **101–103** loop logic can still operate since their program counters **3100** are ignored.

There are various permutations on the above arrangement which can be used. A slightly more user friendly method is to have three 24-bit loop end registers with comparators, and three 24-bit loop start address registers. Each loop would be enabled by a single bit in the status register.

When executing MIMD programs that are working on a common task, there is usually the need to communicate between processors. The system supports both message-passing and semaphores for "loose" communication, but when executing tightly-coupled programs, the need to exchange information on a cycle-by-cycle basis is required. This is where synchronized execution is of benefit.

Within each PP's SYNC/PP# **3104**, register there are four bits one relating to each PP. The other PP(s) to which a particular PP will synchronize is indicated by writing a one to the bits corresponding to those PP(s). The other PP(s) which are expecting to be synchronized will similarly have set the appropriate bits in their SYNC/PP# **3104** register(s).

Code that is desired to be executed in synchronization is indicated by bounding it with LCK (Lock) and ULCK (Unlock) instructions. The instructions following the LCK, and those up to and including the ULCK, will be executed in lock-step with-the other PP(s). There must therefore be the same number of instructions between the LCK and ULCK instructions in each synchronized PP.

The knowledge that synchronized code is being executed is recorded by the "S" (synchronized) bit **(26)** in status register **3108**. This bit is not set or reset until the master phase of the address pipeline stage of the LCK or ULCK instructions respectively, but the effect of the LCK or ULCK instruction affects the fetch of the next instruction during the slave phase. This bit **(26)** is cleared by reset and by interrupts, once the status register **3108** has been pushed.

When a PP encounters a LCK instruction (decoded during the slave phase of the address pipeline stage) it will output a signal **40** to the other PPs **100–103** saying that it is executing a piece of synchronized code. It will then AND the incoming sync signals from the other PPs with which it is desiring to be synchronized, and only when all those processors are outputting sync signals **40** will the next instruction be fetched into the pipeline. This will occur coincidentally in all the synchronized PPs because they too will not proceed until the same set of matching sync signals are active. It is therefore possible to have two different synchronized MIMD tasks running concurrently, because each will ignore the sync signals of the other.

Since it is the instruction fetch that is synchronized, it is possible to interrupt synchronized code. This will immediately cause the PP's sync signals **40** to become inactive. Cache-misses and contention will have a similar effect, keeping the machines in-step. In the case of contention, however, the instruction following the one experiencing contention will have already been fetched into the pipeline before the pipeline pauses.

It is possible to put IDLE instructions into synchronized code, thus holding the operation of all the synchronized PPs until a particular PP has been interrupted and returned from its interrupt routine.

Since it is necessary to be able to interrupt synchronized code, any instruction that specifies the PC **3100** as a destination will immediately disable the effect of the S bit **(26)** of status register **3108** (with the same timing as the ULCK instruction), but the S bit **(26)** will remain set. Once the two delay slot instructions have completed, the effect of the S bit **(26)** is re-enabled. This mechanism prevents problems with being unable to interrupt synchronized delay slot instructions. The sync logic **3104** therefore treats branches, calls and returns (implemented as a PC **3100** load followed by two delay slot instructions) as a single instruction. The sync signals **40** will be driven inactive during the two delay slot instructions and they will be fetched without looking at the sync signals **40**. If a LCK instruction is put in a delay slot, it will take effect after the delay slot instructions have been executed. Synchronized loops behave like normal code because their "branches" operate in the fetch pipeline stage and not the Execute stage.

An example of how synchronization works is given in FIG. **23**. In this case PP**2** **102** and PP**1** **101** exchange the contents of their D**0** registers, assuming that A**0** and A**1** contain the same addresses in each PP **101** and **102**. It also assumes that A**0** and A**1** point to different RAMs to avoid contention. (It would still work even if they pointed to the same RAM, but would take extra cycles.)

In this example PP**1** arrives at its LCK instruction one cycle after PP**2** arrives at its. PP**2** has thus waited for one cycle. They then perform the stores simultaneously but PP**2** then has a cache-miss when fetching the load instruction. Both PPs wait until the cache-miss has been serviced by

transfer processor **11**. They then execute the loads simultaneously and similarly the ULCKS. PP**1** then experiences a cache-miss when fetching instruction **4**, but since the PPs are now unlocked PP**2** carried an unimpeded.

It should be noted that this simple example can be further simplified by combining instructions **0** with **1**, and **2** with **3**. (i.e., LCK**11** ST followed by ULCKl1 LD). This way just the loads are synchronized, but that is all that is required in this case.

Synchronization in SIMD is implicit, so the LCK and ULCK instructions have no purpose and so have no effect if coded. The S bit **(26)** in the Status Register **3108** will have no effect if a program should set it to one.

Interrupts and Returns

Interrupts must be locked-out during the two delay slots after the PC **3100** has been loaded. This prevents having to save both the current PC **3100** value, and the branch address, and restore them on the return. Loads of the PC **3100** are forbidden during delay slot instructions, but if a user somehow does this, then the lock-out period isn't extended; otherwise, it would be possible to lock-out interrupts indefinitely.

Like many processors, there is a global interrupt enable bit **(27)** (I) in status register **3108**. This can be set/reset by the user to enable/disable all interrupts, except the master task interrupt, and the illegal operation code interrupt. Bit **(27)** is cleared by reset and by the interrupt pseudo-instructions after status register **3108** has been pushed.

Returns from interrupts are executed by the sequence POP SR, POP PC, DELAY1, DELAY2. The I **(27)**, S **(26)** and CLD **(23)** and **(22)** bits of status register **3108** are loaded by the POP SR before the DELAY2 instruction, but their effects are inhibited until the branch (POP PC) instruction has completed. This prevents them becoming effective before the return has completed.

There is provision for up to 16 interrupt sources on each PP **100–103**. Of these, eleven are assigned, the others are left for future expansion. Those assigned are:

Master Task

The master processor wishes the PP(s) **1005 103** to run a new task. (Always enabled)

Illop

An illegal opcode was detected. (Always enabled)

SIMD error

Applicable only to the "master" SIMD PP **100**. It is an OR of all enabled interrupts of the three "slave" PPs **101–103**.

Illadd

A non-existent on-chip address was accessed.

Contention

Contention was detected. Interrupt is taken after contention is resolved in the normal manner.

Packet Request

The transfer processor has exhausted the PP's packet request linked-list.

Master Message

Occurs when the master processor 12 writes to the PP's message register.

PP**0** Message

Occurs when PP**0** writes to the PP's message register.

PP**1** Message

Occurs when PP**1** writes to the PP's message register.

PP**2** Message

Occurs when PP**2** writes to the PP's message register.

PP**3** Message

Occurs when PP**3** writes to the PP's message register.

Interrupt Registers

There are two registers that control interrupts; the interrupt flag register **3106** (INTFLG), and the interrupt enable register **3107** (INTEN).

Interrupt enable register **3107** has individual enable bits for each interrupt, except for the master task and illop interrupts which have their associated enable bits hard-wired to one. This register is cleared to all zeros (except the two wired to one) by reset. Bits **15** to **0** are unimplemented.

Interrupt flag register **3106** has an individual :lag for each interrupt source. This flag is latched by the source signals which are each active for a single cycle. This register is cleared to all zeros by reset. Bits **15** to **0** are unimplemented. Those marked as reserved will also be hardwired to zero. Any flag can be cleared by writing a 1 to it. Writing a zero has no effect. This allows the flags to be polled and cleared by software if desired instead of generating interrupts. When an interrupt is taken, the associated flag will be cleared automatically by the hardware. If a flag is being set by a source at the same time as it is being cleared, then the set will dominate.

Interrupt flag register **3106** can be written with ones and zeros like a normal data register once the R (restore registers) bit **(19)** of status register **3108** is set. This allows task state restoring routines to restore the interrupt state.

When interrupts are enabled, by setting the I bit **(27)** in status register **3108**, the interrupts are prioritized. Any enabled interrupt whose flag becomes set will be prioritized, and an interrupt generated at the next possible opportunity. A sequence of three pseudo-instructions is generated which

1. generates the address of interrupt vector and fetches it into the PC **3100**, having first copied the PC into RET **3103**, and clears the interrupt flag in **3106** unless it is being simultaneously set again;
2. Pushes RET **3103**; and
3. Pushes SR **3108** and clears the S **(26)**, I **(27)** and CLD **(22)** and **(23)** bits in SR **3108**. It also disables the functions associated with these bits until the execute stage has completed.

Contention resolution must be supported by the above sequence, so it may take more than three cycles to execute. Similarly a cache-miss on either of the first two instructions of the interrupt routine will cause the pipeline to pause.

The interrupt vectors are fetched from the PPs' own Parameter RAM **10**. Since these exist at the same logical address for each PP **100–103**, the interrupt logic in each PP **100–103** generates the same vector addresses.

It is a consequence of the pipelining that neither of the first two instructions of an interrupt routine can be a LCK instruction. For similar reasons the interrupt logic must disable interrupts **3106**, sync/pp# **3104** and loop logic **3102** until the execute stage of the third pseudo-instruction has completed. This prevents these functions from being active during the fetching of the first two instructions of the interrupt routine.

Interrupts are handled slightly differently in SIMD from MIMD. In order to maintain stack coherency there is a signal from the "master" PP **100** to the "slave" PPs **101–103** that indicates that it is taking an interrupt. This causes the "slave" PPs **101–103** to execute their sequence of interrupt pseudo-instructions. It really doesn't matter which interrupt vector they fetch since their PCs **3100** are ignored anyway.

In SIMD configuration there is also the need to pass back to the "master" PP **100** the fact that a "slave" PP **101–103** has detected an enabled interrupted event. This could be contention, or an illegal address access or a message interrupt. Since any one of these is almost certainly an error they are handled by only one interrupt level on the "master" PP **100**. There is one signal **3010** running from the "slave" PPs **101–103** to the "master" PP **100** which is the logical OR of all the "slave" PPs **101–103** enabled interrupts. The slave(s)

101–103 issuing the interrupt won't execute the interrupt pseudo-instructions until the "master" to "slaves" interrupt signal **3009** becomes valid.

If an interrupt occurs (from the "master" PP **100**) while the SIMD pause signal **3007** is active, the issuing of the "master" to "slaves" interrupt signal **3009** will be delayed until the cause of the pause has been removed. If the cause of the pause is a cache-miss, the cache-miss will be aborted and the interrupt can be taken immediately.

Branches and Calls

Branches and calls are achieved by writing into the PC **3100**, which is an addressable register like any other PP register at the same time that the branch address is written into the PC **3100** the value of PC+1 is copied into the return address register, RET **3103**. This is the value required for a return if the branch is really a call. This RET register **3103** is then programmed to be pushed onto the stack by either of the delay slot instructions in order to make it into a call. To allow conditional calls there is an instruction for conditionally pushing the return address. This only occurs if the branch is taken.

As described earlier, instructions specifying the PC **3100** as the destination will lock-out interrupts until after the second delay instruction has been fetched. This prevents problems with the branch address and/or return address getting lost. During this period synchronization is also disabled as described earlier. In order to prevent problems on returns from interrupts with loop logic **3102** becoming activated too early, loop end address compare is also disabled during the two delay slot instructions.

Status RegisterStatus

Register **3108** is resident in the PFC unit **3002** and shown in FIG. **34**. Each bit's function is described in the following sections.

The N—Negative bit **(31)** is set by certain instructions when the result was negative. Writing to this bit in software will override the normal negative result setting mechanism.

The C—Carry bit **(30)** is set by certain instructions when a carry has occurred. Writing to this bit in software will override the normal result carry setting mechanism.

The V—Overflow bit **(29)** is set by certain instructions when an overflow has occurred. It is not a permanently latched overflow. Its value will only be maintained until the next instruction that will set/reset it is executed. Writing to this bit in software will override the normal result overflow setting mechanism.

The Z—Zero bit **(28)** is set by certain instructions when the result was zero. Writing to this bit in software will override the normal zero result setting mechanism.

The I—Interrupt Enable bit **(27)**, which is set to zero by reset and interrupts, is a global interrupt enable.

It enables all the interrupts whose interrupt enable bits are set. Due to normal pipeline delays changing the value of this bit will have no effect until after the execute stage has completed.

The S—Synchronized code execution bit **(26)**, which is set to zero by reset and interrupts, indicates that synchronous MIMD code execution is operating. Instructions will only be fetched when all the PPs indicated by the SYNC bits in the SYNC/PP# **3104** register are outputting active sync signals **40**. This bit's value is ignored in SIMD configuration.

The MLD—Maximum looping depth bits **(24)** and **(25)**, which are set to zero by reset, indicate how many levels of loop logic are operating. 00 - indicates no looping, 01 just loop **1**, 10 - loops **1** and **2**, 11 - all three loops active.

The CLD—Current looping depth bits **(22)** and **(23)**, which are set to zero by reset, indicate which of the Loop End registers is currently being compared against the PC. 00 - indicates no looping, 01 - Loop End **1**, 10 - Loop End **2**, 11 - Loop end **3**. These bits are set to zero by reset and by interrupts once status register **3108** has been pushed.

The R—Restoring registers bit **(19)**, which is set to zero by reset, is used when restoring the state of the machine after a task switch. When set to a one, it allows interrupt flag register **3106** to be written with ones and zeros like a normal register, and also the message registers to be restored without causing new message interrupts. It also enables the Q bit **(17)** of status register **3108** to be written to for similar reasons. The R bit **(19)** will therefore only be used by task restoring routines.

The U—Upgrade packet request priority bit **(18)**, which is set to zero by reset, is used to raise normal background priority packet requests to foreground. Its value is transmitted to transfer processor **11** and is used in conjunction with the Q bit's value to determine the priority of transfer requests. This bit remains set until reset by software.

The Q—Queued packet request bit **(17)**, which is set to zero by reset, indicates that the PP has a packet request queued. It becomes set one cycle after the P bit **(16)** of the status register **3108** is written with a one. This bit's value is transmitted to transfer processor **11** and used in conjunction with the U bit's **(18)** value to determine the priority of transfer requests. This bit is cleared by transfer processor **11** once the PP's linked-list of packet requests has been exhausted. If this bit is being set (via the P bit **(16)**) by software at the same time as transfer processor **11** is trying to clear it, then the set will dominate. Writing to this bit directly has no effect, unless the R bit **(19)** in status register **3108** is set, when this bit can be written with a one or zero. This can be used to de-queue unwanted packet requests, but is more normally needed for restoring interrupted tasks.

The P—Packet Request bit **(16)**, which is set to zero by reset, is a one-shot single-cycle bit, used to set the Q bit **(17)** in status register **3108**. This initiates a packet request to transfer processor **11**. The P/Q bit mechanism is to allow read-modify-write operations on status register **3108** without accidentally initiating packet requests if the packet request bit was cleared by the TP **11** between the read and write.

All unimplemented status register bits **3108** will read as zero. Writing to them has no effect. They should only be written with zeros to maintain future device compatibility.

Synchronization Indicators

The four SYNC bits, which are set to zero by reset, are used to indicate to which PP a MIMD PP wishes to synchronize. When executing code bounded by LCK and ULCK instructions, instruction fetches will not proceed unless al those processors indicated by one in the corresponding SYNC bits are outputting sync signals **40**. These bit values are ignored in SIMD configuration.

The two PP# bits are unique to each PP **100–103**. They are hardwired to allow software to determine which PP it is running on, and thus calculate correct unique addresses. Writing to these bits has no effect.

The coding of these bits is; 00 - PP**0** **100**, 01 - PP**1** **101**, 10 - PP**2** **102** and 11 - PP**3** **103**. PP**0** **100** is the "master" SIMD PP. The associated start addresses of the PPs' Local crossbar RAMs are; 0000h - PP**0** **100**, 2000h - PP**1** **101**, 4000h - P**2** **102** and 6000h - PP**3** **103**.

Pipeline control can be difficult. The reason for this is the number of concurrent operations that interrelate as demonstrated below:

Instruction fetch with associated cache management.

Address generations with various addressing modes.

Crossbar access requests with independent contention resolution.

Memory transfers.

Loop address compare, with PC load/increment.

Loop count decrement/reload.

Looping depth count decrement/reload.

Multiply.

Shift.

Add/subtract.

Synchronization with other PPs.

Interrupt detection/prioritization.

The pipeline "events" that cause an "abnormality" in the straightforward execution of linear code are:

Instruction cache-miss

Contention on the Global and/or Local buses

Loops

Branches and calls

Interrupts

Idling

Synchronization

In the following sections the events are shown diagrammatically. The abbreviations "pc+1" and "pc" indicate whether the program counter **3100** is incremented normally, or not, respectively. The pipeline boundaries marked are the Stages, which consist of the slave clock phase followed by the master clock phase, ie. |s:m|. Where cycles may be repeated an indefinite number of times this is shown by "|... |".

Cache-miss Pipeline Sequence

The pipeline sequence for a cache-miss is shown in FIG. **35**. The cache-miss is detected during the slave phase causing the PP's sync signals **40** to become inactive, the SIMD pause **3007** to become active, the PC **3100** not to be incremented and the pipeline **3105** not be loaded. The pipeline pauses. The previous instruction is left generating address(es), but not modifying address registers **3202** and **3222**. The previous instruction to that is left repeating the data unit operations, but not storing the results. The crossbar accesses however complete to memory in the case of stores, or to temporary holding latches **3018** and **3019**, in the case of loads. These accesses are not reperformed on further repetitions of the execute stage.

A cache-miss service request signal **3115** is sent to the TP **11**. The PP **100–103** waits until this is acknowledged, then transfers the cache-miss information to the TP **11**. The PP **100-103** again waits until the present flag is set by a signal from the TP **11**. Once the present flag is set, sync signals **40** can again become active, the SIMD pause signal **3007** becomes inactive and the instruction fetching and PC **3100** incrementing can recommence. This releases address unit **3001** and data unit **3000** units to complete their operations. Loads complete from the temporary holding latches **3018** and **3019** into their destination registers.

If an interrupt should occur (which can't by definition be in the two delay slot instructions after a PC **3100** load) during a cache-miss, then the cache-miss is aborted by taking the cache-miss service request signal **3115** inactive. This prevents needlessly waiting for code to be fetched which may not then be required. The TP **11** will abort a cache-miss service in progress if it sees the cache-miss service request signal **3115** go inactive.

Contention Resolution Pipeline Sequence

The pipeline sequence for contention resolution is shown in FIG. **36**. In this example, contention is experienced on both local bus **3006** and global bus **3005** buses. Contention is defined as two or more PP local buses **3006** and/or global buses **3005** outputting addresses within the same memory at the same time. They can be any mixture of loads and/or stores. Contention is indicated by the crossbar or address contention signals **3210** and **3211** to global bus **3005** and local bus **3006**, respectively, during the slave phase of the execute pipeline stage. The PP's sync signal **40** is driven inactive and the SIMD pause signal **3007** active.

The execute pipeline stage repeats with each bus **3005** and **3006** re-outputting the address which was latched in the address unit during the address pipeline stage. When successful, stores complete to memory **10** and loads complete to temporary holding latches. In fact the load only goes to a holding latch **3018** or **3019** on the first bus to resolve contention. The second port can complete directly into the destination register if a load.

In this example local bus **3006** is successful at the first retry. If it is a store, then it goes straight to memory **10**. If it is a load, the data is written to a temporary holding latch **3019**. Global bus **3005** in this example has to perform two retries before being able to proceed with the transfer.

While the retries are being performed, instruction fetching has ceased. The next instruction was fetched before contention was detected but doesn't begin to execute until contention is fully resolved. The following instruction is repeatedly fetched, but not loaded into the pipeline.

Once contention is resolved, sync signal **40** can again become active, the SIMD pause signal **3007** becomes inactive, and instruction fetching can recommence.

Loop Control Pipeline Sequence

The pipeline sequence for loop control is shown in FIG. **37**. In this example only one loop is defined (using Loop End **1 3116**, Loop Count **1 3119** and Loop Reload **1 3122** registers). It contains **2** instructions, and the loop counter value before starting the loop is **2**. The principles can be extended to all three loops.

In this example, when PC **3100** is found (during the slave phase) to be equal to loop end register **3116**, loop counter **3119** is compared to 1. As it is not equal, the PC **3100** is reloaded from start address register **3111**, loop counter **3119** is decremented by **1** and the current looping depth bits **3108** (bits **(22)** and **(23)**) are reloaded from the maximum looping depth bits **3108** (bits **(24)** and **(25)**) (in this example the CLD bits values don't change).

The loop is repeated again, but this time when the end of loop is detected, loop counter **3119** is 1, so PC **3100** is incremented to the next instruction instead of being loaded from start address register **3111**. Loop counter **3119** is reloaded from loop reload register **3122** and current looping depth bits **3108** (bits **(22)** and **(23)**) are decremented by 1.

The pipeline sequence for a branch or call is shown in FIG. **38**. When the branch address is written into the PC **3100** the value of pc+1 (calculated during the slave phase) is loaded into RET **3103**. This is the address of the instruction after the second delay instruction, and is the return address for a call.

The branch address can come from memory, a register, an immediate 24-bit value or by adding a 24-bit index to the current PC value in **3100**.

Difficulties with saving the branch address and the return address would occur if interrupts were allowed during the delay slot instructions. In order to prevent this interrupts are locked out during the fetch pipeline stage of the two delay slot instructions. This requires decoding a PC **3100** destination during the slave phase of the address pipeline stage. Lockout of interrupts will occur with conditional branches, as the condition isn't testable until after the two delay slot instructions have been fetched.

As described in the synchronization section, branches and calls are treated as one instruction as far as synchronization

is concerned. Thus the PP's sync signal **40** goes inactive during the two delay slot instructions, with the timing shown. This is also true for conditional branches and calls regardless of the condition.

Also, since conditional calling is done by pushing RET **3103** (return address) only if the conditional branch is taken, then there is a potential problem with conditional calls in SIMD, since the "slave" PPs **101–103** don't know if the branch was taken. They therefore wouldn't know if they should push RET **3103**, and thus could lead to stack inconsistency. In order to fix this the signal "SIMD branch-taken" **3008** is output from the "master" SIMD PP **100** to the "slave" PPs **101–103** which they use to determine if their PRET instructions should push RET **3103**. This is taken active (or left inactive) with the timing shown.

Interrupts

The pipeline sequence for an interrupt is shown in FIG. **39**. The sequence is that for any machine in MIMD or SIMD, but if the interrupt source is a "slave" SIMD PP **101–103** then the sequence is kicked off by the "slave" PP to "master" PP interrupt signal **3010** as shown. The "slave" PP **101–103** will wait for the "master" PP **100** to output the "master" PP to "slave" PPs interrupt signal **3009** as shown.

Once an enabled interrupt is detected, the sequence of pseudo-instructions is commenced. The first instruction calculates the interrupt vector address and fetches the vector into the PC **3100** and copies the old PC value (return address) into RET **3103**. The second instruction pushes RET **3103**. The third instruction pushes the SR **3108** and clears its S, I and CLD bits.

Note that-the first two instructions of the interrupt routine are being fetched before the SR **3108** has been pushed and its S, I and CLD bits cleared. The functions of the S. I and CLD bits are thus disabled by the interrupt logic until SR **3108** has been pushed, and the S, I and CLD bits cleared.

IDLE Pipeline Sequence

The pipeline sequence for an IDLE instruction is shown in FIG. **40**. The IDLE instruction is decoded before the end of the slave phase of its address pipeline stage, allowing it to stop the PC **3100** from being incremented and the pipeline from being loaded with the next instruction. The MIMD pause is taken inactive and the SIMD pause signal is activated. Instruction fetching halts until the interrupt logic detects an enabled interrupt. This will kick off the sequence of pseudo-instructions once an enabled interrupt is detected. If the interrupt source comes from a "slave", SIMD PP **101–103**, then the interrupt sequence isn't kicked off until the "master" PP to "slave" PPs interrupt signal **3009** is activated.

If parallel transfers are coded with an IDLE instruction they will occur when the interrupt occurs, before the interrupt routine is executed.

Synchronization

The pipeline sequence for a synchronized MIMD or SIMD PP waiting for an incoming sync signal to become valid is shown in FIG. **41**. The next instruction is not fetched into the instruction pipe until all the desired PPs are outputting active sync signals.

Address Unit

The logic within address unit **3001** works predominantly during the address pipeline stage, calculating the address(es) required for the crossbar'd memory **10** access(es) during the execute stage. The memory access(es) during the execute stage however are also under the control of this unit as it must independently resolve crossbar contention on the two ports **3005** and **3006**. There is thus feedback from address unit **3001** to PFC unit **3002**, in order to pause the pipeline while contention is being resolved. There is also control logic which performs the register accesses and the aligner/extractor **3003** operations during the execute stage.

A block diagram of address unit **3001** is given in FIG. **32**. As can be seen from this diagram the majority of the unit consists of two identical 16-bit subunits **3200** and **3201**, one for generating addresses from registers A015 A3 **3202**, the other from registers A4–A7 **3222**. These are referred to as the global and local subunits **3200** and **3201** respectively.

The naming of the local subunit **3201** is a slight misnomer since if a single memory access is specified, and it is not a common SIMD load, then it can come from either subunit **3200** or **3201**, and will be performed on the global bus **3005**. This is the purpose of the multiplexers **3212–3214** which are not within the subunits. If two parallel accesses are specified then they do come from their respectively named subunits. Common SIMD loads (on the local port **3006**) must use the local subunit **3201**.

While the subunits **3200** and **3201** operate on and generate 16-bit addresses, user software should not rely on rolling round from FFFFh to 0000h, or vice-versa, as future designs may have subunits capable of generating larger addresses.

Normal pipeline delays force a restriction upon the user that an address register **3202** and **3222**, index register **3203** and **3223**, qualifier register **3204** and **3224** or modulo register **3205** or **3225** which is modified by an instruction cannot be referenced by the following instruction. They may be referenced by the next-but-one instruction. This allows interrupts to occur without undesired consequences.

The global and local subunits **3200** and **3201** are identical apart from the register numbers, so one description will serve for both. There are however slight differences in how the two units are connected and used which will be highlighted, but the internal content of the subunits is the same.

Within each subunit are four 16-bit address registers **3202** (A0–A3) or **3222** (A4–A7). These contain indirect addresses which are either used unchanged or to which indices are added. If an index is added, then there is the option of replacing the previous address register value in the address registers **3202** and **3222** by the value created by indexing.

The values within the address registers **3202** and **3222** are always interpreted as byte addresses, regardless of the data size being transferred. Non-aligned word or half-word transfers can be specifically coded but this requires two instructions. This is discussed later.

All address accesses of the PPs **100–103** must be sourced from an address register **3202** or **3222**. The capability of coding an immediate address within the opcode is not provided. This is considered to be of low significance since SIMD tasks would not normally wish to specify the same address for each PP. It is also thought to be of low importance for MIMD since MIMD algorithms should be written in such a manner that they can be run on any PP.

Address register A7 **3227** is reserved as the stack pointer. It can be referenced like any other address register **3202** or **3222**, but obviously care must be taken if adjusting A7's value, as interrupts can occur at any time. PUSH, POP and interrupts treat pushes as pre-decrement, and pops as post-increment.

Within each subunit **3200** or **3201** are four 16-bit index registers (x0–x3) **3203** and (X4–X7) **3223**. The contents of these can be requested by the opcode to be added to, or subtracted from, the contents of the specified address register **3202** or **3222**, in order to perform indexed addressing. This addition/subtraction can be performed either before or after the address is put out onto crossbar **20**, thus allowing

pre- or post-indexing respectively. The address created by pre-indexing can optionally be stored back into address register **3202** or **3222**. This is compulsory for post-indexing.

If only one access is specified by the opcode, then any one of the four index registers **3203** and **3223** registers within the same subunit as the address register **3202** or **3222** can be specified as the index source, (eg. A**0** and X**2**, A**6** and X**4**, . . . ). The indexing modes that can be specified are pre- or post-, addition or subtract, with or without address register **3202** or **3222** modify.

If two parallel accesses are specified, then the index register **3203** or **3223** with the same suffix as the address register **3202** or **3222** is used (eg. A**2** and X**2**, AS and X**5**), and only post-addition-indexing is available.

The values contained within the index registers **3203** and **3223** are always interpreted as byte addresses, regardless of the data size being transferred.

An alternative indexing method to index register indexing is short-immediate or implied immediate indexing. Short-immediate indexing, which is available when only one access is specified, allows a 3-bit short immediate value to be used as the index. As with index register indexing this can be either pre- or post-, addition or subtraction, with or without address register **3202** or **3222** modify.

If two parallel access are coded then only an implied immediate of +1 with post-indexing, and −1 with pre-indexing, can be specified. These allow stacks of 8, 16 or 32 bits to be accessed even when two parallel transfers are coded.

When specifying short-immediate or implied immediate, the immediate value is shifted 0, 1 or 2 bits left by shifter **3208** or **3228** if the specified word size is 8, 16 or 32 bits, respectively, before being added to the value from address register **3202** or **3222**. The short-immediate index is thus 0–7 "units", and the implied immediate is +/−1 "unit", where a "unit" is the data size. The address register is not shifted as it always contains a byte address.

Associated with each address register (A**0**–A**3**) **3202** or (A**4**–A**7**) **3222** is an 8-bit address qualifier register (Q**0**–Q**3**) **3206** or (Q**4**–Q**7**) **3224**. These qualifier registers contain extra information required for the access which cannot be fitted into the opcode. This information typically isn't required to be modified on a cycle-by-cycle basis.

Since A**7** **3227** is assigned to be the stack pointer, bits **6-0** of Q**7** **3229** are hardwired to 0000010 respectively. The individual bit functions of the Q registers **3204** and **3224** are described below:

A PP's address space is divided into two halves; data space (the crossbar'd memory **10**) and I/O space (the parameter RAMS, message registers and semaphore flags). This is controlled by an address space select bit. If this bit is a 1, then the access is performed to the I/O space. Setting this bit to 0 directs the access to the crossbar'd RAM **10**.

If a power-of-2 modulo bit has value 1, then it indicates the desire to break the carry path on the address adder **3206** or **3226** at the position indicated by a 1 (or perhaps several 1s) in the modulo register, M**0** **3205** or M**4** **3225**, associated with the subunit **3200** or **3201**. This allows power-of-2 dimension matrix addressing to be performed. If this bit is 0 then the address adder **3206** or **3226** behaves as a normal 16-bit adder/subtracter.

If a reverse-carry addressing bit is set to a 1, then reverse-carry addressing is enabled. This causes the carry path of the address adder/subtracter **3206** or **3226** to reverse its direction. When specifying indexed addressing with a power-of-2 index (eg. 8, 16, 32 etc.) this has the effect of counting in a manner required by FFTs and DCTS. If this bit is 0 then the address adder **3206** or **3226** behaves as a normal 16-bit adder/subtracter.

A common SIMD load bit when set to 1 specifies that if a load is specified, then it should be a common SIMD load. This bit, due to the nature of the common SIMD load, is only relevant to Q**4**–Q**6** **3224** of the "master" SIMD PP **100** when specifying a load. This will cause local buses **3006** of the PPs to be series connected for the duration of the load. If this bit is zero, then the common SIMD load function will be disabled. Setting this bit in "slave" PPs **100**–**103**, or other than Q**4**–Q**6** of the "master" SIMD PP, will have no effect. Stores are unaffected by this bit value.

When a sign extend bit is set to a 1, loads of halfwords or bytes will have bit **15** or bit **7**, respectively, copied to all the most-significant bits when loaded into the PP register. This is a function of the aligner/extractor. If this bit is a 0, then all the most-significant bits will be zero-filled.

A two size bits specify the size of the data to be transferred. The codings are 00 - 8 bits, 01 - 16 bits, 10 - 32 bits, 11 - reserved. These bits control the function of the align/extractor **3003**, the byte strobes on stores, and the sign extend function.

Address ALUs **3206** and **3226** are normal 16-bit adder/subtracters except they can have the direction of their carry paths reversed or broken.

When performing in-place FFTs (Fast Fourier Transforms) the addresses of either the source data or the results are scrambled in a way that make them difficult to access. The scrambling however has an order to it that allows fairly easy unscrambling if the direction of the carry path of address adder **3206** or **3226** is reversed. This feature which is common on DSPs is usually referred to as reverse-carry addressing, or bit-reversed addressing.

A power-of-2 index (eg. 8, 16, 32 . . . ) equal to the power-of-2 number of points in the FFT divided by 2, is added onto the address from the address register **3202** or **3222** using a reversed carry ripple path. The resulting value is used as the address and stored in the address register **3202** or **3222**. This produces the sequence of addresses required to unscramble the data, e.g., if the index is 8 and the initial address register value was 0, then the sequence 0, 8, 4 C, 2, A, 6, E, 1, 9, 5, D, 3, B, 7, F is produced.

The reverse-carry feature will operate with any indices other than power-of-2 numbers, but may not yield any useful results. This feature is only operative when the reverse-carry bit in Q register **3204** or **3224** associated with the specified A register is set to 1.

When distributing data around crossbar memories **10**, there may well be situations where a "wrap-around" is required in a particular dimension, in order to access consecutive data, handle boundary conditions or address arrayed data. In order to easily support this, the ability to break the carry path of address adder **3206** or **3226** at one or more chosen places is provided.

The location of the break(s) is determined by modulo register M**0** **3205** or M**4** **3225**. A 1 located in bit n of a Modulo register will break the carry path between bits n−1 and n of the address adder. This allows a 2" modulo buffer to be implemented. Any number of Is can be programmed into the Modulo registers **3205** or **3225** as desired. This allows multi-dimensional arrays to be implemented, with each dimension being a power-of-2 modulo amount.

This feature is only active when the power-of-2 modulo bit in qualifier register **3204** or **3224** associated with specified address register **3202** or **3222** is set to 1. Otherwise normal linear addressing applies.

Local and Global Ports

The main feature of global ports **3005** and local ports **3006** are the aligner/extractors **3003**. They handle the movement of 8, 16 and 32-bit data, sign-extension, non-aligned access and common SIMD loads. To achieve these functions the aligner/extractors **3003** are basically a collection of byte multiplexers, wired to give the required operations. Each global port **3005** or local port **3006** operates independently, so a description of one applies for the other. Common SIMD load is the exception to this statement and is discussed with the other functions below:

The data size of a load or store is defined within qualifier register **3204** or **3224** associated with the specified address register **3202** or **3222**. Valid options are 8, 16 or 32 bits. The data size can thus vary on a cycle-by-cycle basis, dependant upon which address register **3202** or **3222** is accessed and the values within its qualifier register **3204** or **3224**.

A full 32-bit word of data is always transferred across the crossbar between memory **10** and the PP **100–103**, or vice-versa, even when the specified word size is 8 or 16 bits. When performing loads of 8 or 16-bit quantities, the appropriate byte(s) are extracted from the 32-bit word according to the LS bits of the address and the word size. This is right-shifted if required, to right-justify the data into the PP register destination. The upper bytes are filled either with all zeros, or if sign extension was specified in the qualifier register **3204** or **3222**, the MS bit (either **15** or **7**) is copied into the most significant bytes.

When storing 8 or 16-bit quantities to the crossbar'd memory **10** the (right-justified) data is repeated 4 or 2 times, respectively, by aligner/extractor **3003**, to create a 32-bit word. This is then written across crossbar **20** accompanied by four byte strobes which are set according to the LS bits of the address and the data size. The appropriate byte(s) are then written into the memory.

The above description of data loads and stores assumes that the addresses are aligned. That is, 16-bit accesses are performed to/from addresses with the LS bit=0, and 32-bit accesses are performed to/from addresses with the two LS bits - 00. (8-bit quantities are always aligned).

Provision however is made to allow accesses of non-aligned 16 or 32-bit data. This is not automatic, but requires the user to specifically encode loads or stores of the upper and lower parts of the data separately. There are thus four instructions available that "load upper", "load lower", "store upper" and "store lower" parts of the data. These instructions use the byte address and data size to control aligner/extractor **3003** and, in the case of loads, only load the appropriate part of the destination register. This requires the registers to have individual byte write signals. For this reason non-aligned loads will be restricted to data registers **3200** only.

In practice the "load lower" and "store lower" instructions are the normal load and store instructions. If the address is aligned then the transfer is completed by the one instruction. If followed (or preceded) with the "tupper" equivalent operation, then nothing will be transferred. If the address is not aligned, then only the appropriate byte(s) will be stored to memory or loaded into a register.

Some examples of non-aligned operation may help the explanation here and are shown in FIGS. **42** and **43**. These are all little-endian examples which are self explanatory.

Common SIMD Load

There is sometimes the need, such as in convolution, to perform two accesses in parallel in each machine each cycle. One of these is data coming from anywhere in the crossbar'd memory **10** via global ports **3005**, and the other is information "common" to each PP **100–103**, such as a kernel value. This would therefore be entering via local port **3006**. In order to pass this information to all local ports **3006** simultaneously from one source of data, there are unidirectional buffers that series-connect local crossbar data buses **6**.

These series connections are only made in SIMD, when an address register **3222** in the local address subunit **3201** is accessed with the common SIMD load bit set in its associated qualifier register **3224**, and a load is specified. Under all other conditions local data buses **6** are disconnected from each other. When the series connections are made, the addresses output by PPs **1–3 101–103** (the "slave" SIMD PPs) are ignored by the crossbar **20**.

Since the series connecting buffers are unidirectional, the common data can only be stored in the four crossbar RAMS **10-0**, **10-2**, **10-3** and **10-4** opposite the "master" SIMD PP, PP**0 100**. (ie. in the address range 0000h–1FFFh).

Contention Resolution

The purpose of contention resolution is to allow the user to be freed from the worries of accidentally (or deliberately) coding two simultaneous accesses into the same RAM by any two devices in the system. There are seven buses connected to each crossbar RAM. It would therefore be a considerable constraint to always require contention avoidance.

In SIMD it is necessary for all PPs **100–103** to wait while contention is resolved. To achieve this a "SIMD pause" signal **3007** is routed between PPs **100–103**, which can be activated by any PP **100–103** until their contention is resolved. Similarly in MIMD when executing synchronized code all synchronized PPs must wait until contention is resolved. This is signalled via sync signals **40**.

The crossbar accesses are completed as soon as global ports **3005** and local ports **3006** are granted ownership of the RAM(s) they are attempting to access. In the case of stores they complete to memory **10** as soon as they are able. In the case of loads, if the PP is unable to resume execution immediately (because contention is continuing on the other port, or the SIMD pause signal **3007** is still active, or synchronized MIMD PPs are waiting for another PP, or a cache-miss has occurred) then the load(s) complete into holding latches **3018** and **3019** until execution is recommenced. This is because the data unit operation is also being held and its source data (i.e., a data register **3300**) cannot be overwritten by a store. Similarly if a load and store are accessing the same data register and the store is delayed by contention, then the load data must be held temporarily in latch **3018** or **3019**.

Data Unit

The logic within data unit **3000** works entirely during the execute pipeline stage. All of its operations use either registers only, or an immediate and registers. Indirect (memory) operands are not supported. Data transfers to and from memory are thus specifically coded as stores and loads.

A block diagram of data unit **3000** is given in FIG. **33**. The major components of the unit consist of 8 Data registers **3300**, 1 full barrel shifter **3301**, a 32-bit ALU **3302**, a single-cycle 16×16 multiplier **3304**, special hardware for handling logical ones **3303**, and a number of multiplexers **3305–3309**. Also included are two registers **3310** or **3311** closely associated with the barrel shifter **3301** and the ALU **3302**. They control the operation of these two devices when certain instructions are executed.

There are eight D (data registers **3300**) within data unit **3000**. These are general purpose 32-bit data registers. They are multi-ported and therefore allow a great deal of parallelism. Four sources can be provided to ALU **3302** and

multiplier **3304** at the same time as two transfers to/from memory are occurring.

Multiplier **3306** is a single-cycle hardware 16×16 multiplier. A 32-bit result is returned to the register file **3300**. The hardware will support both signed and unsigned arithmetic.

As can be seen from FIG. **33**, there are many multiplexers feeding the various pieces of hardware within data unit **3000**. The two multiplexers **3306** or **3307** feeding ALU **3302** (one via barrel shifter **3301**) however are slightly different in that they support individual byte multiplexing. This is so that the "merge multiple (MRGM)" instruction can operate. This instruction uses the 4, 2 or 1 least-significant bits of the MFLAGS register **3311** to multiplex the individual bytes of each source with all zero bytes, so that what is passed into the ALU on one input is src**1** bytes and 00h bytes intermixed according the M FLAGS. The opposite mix of 00h bytes and src**2** is passed into the other ALU input. ALU **3302** can then do an ADD or an OR to produce a result which has some bytes from src**1** (source **1**) and the others from src**2** (source **2**). This is very useful for performing saturation, color expansion and compression, min and max, transparency and masking.

Barrel shifter **3301** resides on the "inverting" input to ALU **3302**. This allows the possibility of performing shift and add, or shift and subtract operations using a predefined shift amount set up in the OPTIONS register **3310**. This is very useful, especially since the multiplier has no result scaler. Barrel shifter **3301** can shift left or right by 0–31 bit positions, and can also do a 0–31 bit rotation.

The 32-bit ALU **3302** can perform all the possible logical operations, additions and subtractions. Certain instructions can cause ALU **3302** to be split into two halfwords or 4 bytes for addition or subtraction, so that it can simultaneously operate on multiple pixels.

The "ones" logic **3303** performs three different operations. Left-most one detection, right-most one detection, and it can also count the number of ones within a word. These together have various uses in data compression, division and correlation.

The output of ALU **3302** has a one bit left-shifter which is used when performing divide iteration steps. It selects either the original source and shifts it left one place with zero insert, or else it selects the result of the subtraction of the two sources, shifts it left one bit, and inserts a 1.

"Multiple" flags register **3311** is a 32-bit register that is used for collecting the results of "add multiple", "subtract multiple" or "compare multiple" instructions. ALU **3302** can be split into 4, 2 or 1 pieces by the value of the ALU bits in options register **3310**. The least-significant 4, 2 or 1 bits of "multiple" flags register **3311** are loaded by the carry, borrow or equate bits of the three instructions.

The options register **3310** contains two control fields, the ALU split bit for use with "multiple" instructions, and the barrel shifter predefined amount for shift and add, and shift and subtract instructions.

Three ALU bits in **3310** allow the potential for the ALU **3302** to be splittable into pieces of size 2, 4, 8, 16 and 32 bits each. The assigned codings are 000 - 2 bits, 001 - 4 bits, 010 - 8 bits, 011 - 16 bits, 100 - 32 bits. In the current implementation, however, the only permitted values are 8, 16 and 32 bits. These bit values control the operation of the ADDM (add multiple), SUBM (subtract multiple), MRGM (merge multiple), and CMPM (compare multiple) instructions.

Merge Multiple Instruction

FIG. **44** shows some complex operations that can be performed by the combination of the splitable ALU instructions that set the MFLAGS register with the Merge Multiple (MRGM) instruction utilizing the multplexer hardware of FIG. **33**. The examples show only the data manipulation part of what would generally be a loop involving many of these operations.

In the add with saturate example of FIG. **44**, the ADDM instruction does **4** 8-bit adds in parallel and sets the MFLAG register according to whether a carry out (signalling an overflow) occurs between each 8-bit add. The 8-bit addition of Hex **67** to Hex EF and Hex CD to Hex **45** both cause a carry out of an 8-bit value which causes MFLAG bits **0** and **1** to get set (note only the 4 least significant bits of the MFLAG register will be significant to the MRGM instruction) resulting in the MFLAG register being set to "3". With D**3** previously set to Hex FFFFFFFF, the MFLAG register values are used to select between the result of the previous operation contained in D**2** or the saturation value of Hex "FF" stored in D**3**.

The Maximum function is obtained by doing a SUBM followed by using the same two registers with the MRGM instruction. The SUBM will set the bits of MFLAG register according to whether each 8-bits of a 32-bit value in one register is greater than the corresponding 8-bits in the other register as a result of 4 parallel 8-bit subtractions. As shown in the example, the MFLAG result of "5" (or binary "0101" for the 4 least significant bits) indicates that Hex "EE" was greater than Hex "**67**" and that Hex "AB" was greater than Hex "**23**". By using the MFLAG results with the MRGM instruction the greater of the corresponding values within registers D**0** and D**1** become the final result stored in D**2**.

With transparency, a comparison is made between a "transparent color" or protected color value (in the example shown the value "**23**" is transparent) which will later protect writing of those 8-bit values. The CMPM instruction performs 4 parallel 8-bit comparisons and sets the corresponding 4 MFLAG bits based on equal comparisons.

In the example, only the third comparison from the right was "equal" signified by a "**4**" (binary "0100") in the MFLAG register. The MRGM instruction will then only use D**0**'s values for the result except in the third 8-bits from the right.

Color expansion involves the selection of two multiple bit values based on a logic "1" or "0" in a binary map. In the example, the 4-bit value of Hex "**6**" (binary 0110) is moved into the MFLAG register. The MRGM instruction in this example simple selects between the 8-bit values in D**0** and D**1** according to the corresponding locations in the MFLAG register.

In color compression, a binary map is created based on whether or not the corresponding values match a specific color value. In this case the CMPM instruction's result in the MFLAG register is the result desired.

In the guided copy example, a binary pattern array is used to determine which values of the source are copies to the destination. In the example the upper two 8-bit values of D**0** will be copied to D**1**.

In the examples above 8-bit data values have been used by way of example. The number and size of the data values is not limited however to four eight-bit values.

Several important combinations of the arithmetic multiple instructions used with the merge instruction are shown. Many other combinations and useful operations are possible. It is significant that a large number of useful operations can be obtained by using the arithmetic multiple instructions that set the mask register and are followed by the merge instruction.

Two OPT bits in options register **3310** specify the type of shift that barrel shifter **3301** will perform during shift and

add, and shift and subtract instructions. The codings are 00 - shift-right logical, 01 - shift-right arithmetic, 10 - shift-left logical, and 11 - rotate.

The AMOUNT bits in options register **3310** specify the number of bits of shift or rotate of the type indicated by the OPT bits, and occurring when shift and add, or shift and subtract instructions are executed.

Appendix

The Appendix details each available instruction of the PPs **100–103**. Dots (.) represent operation codes that can be assigned as desired. Some of these instructions have already been explained in the earlier text.

The order of instruction presentation is:

1. Data unit instructions (with or without parallel transfers) and single operation instructions (i.e., no parallel operations).

2. The transfers that can occur in parallel with data unit operations.

Transfer Processor

Transfer processor **11** is the interface between system memory **10** and the external world. In particular, it is responsible for all accesses to external memory **15**.

Transfer processor **11**, shown in detail in FIG. **57**, mainly performs block transfers between one area of memory and another. The "source" and "destination" memory may be on- or off-chip and data transfer is via bus **5700** and FIFO buffer memory **5701**. On-chip memory includes: crossbar data memory **10**, PP's instruction caches **10**, master processor instruction cache **14**, and master processor data cache **13** (shown in FIGS. **1** and **2**). Data memories **10** and data cache **13** can be both read and written. The instruction caches **14** are only written.

All operations involving the caches are requested automatically by the logic associated with the caches. In this case the amount of data moved will be the cache "line" size, and the data will be moved between external memory **15** specified by the appropriate segment register and a segment of the cache.

Transfers involving crossbar data memories **10** are performed in response to "packet requests" from parallel processors **100–103** or master processor **12** and are accomplished via bus **5707**. The packet request specifies the transfer in terms of a number of parameters including the amount of data to be moved and the source and destination addresses.

Block Transfers

A packet request specifies a generalized block transfer from one area of memory to another. Both source address generator **5704**, and destination address generator **5705** are described in the same way. A "block" may be a simple contiguous linear sequence of data items (bytes, half-words, words or long-words) or may consist of a number of such regions. The addressing mechanism allows an "array" of up to 3 dimensions to be specified. This allows a number of two dimensional patches to be manipulated by a single packet request.

Data items along the innermost dimension are always one unit apart. The distance between items of higher dimensions is arbitrary.

The counts of each dimension are the same for both source and destination arrays.

FIG. **45** is an example of a complex type of block that can be specified in a single packet request. It shows a block consisting of two groups of three lines each consisting of **512** adjacent pixels. This might be needed for example if two PPs where going to perform a 3×3 convolution, each working on one of the groups of lines.

The block is specified in terms of the following parameters as shown in FIG. **45**:

| | |
|---|---|
| Run length | Number of contiguous items e.g. 512 pixels. |
| Level 2 Count | Number of "lines" in a group, e.g., 3 |
| Level 3 Count | Number of "groups" in a "block" e.g., 2 |
| Start Address | Linear address of the start of the block, e.g., address of pixel indicated as "SA". |
| Level 2 Step | Distance between first level groups, e.g., difference of the addresses of pixels "B" and "A". |
| Level 3 Step | Distance between second level groups, e.g., difference of the addresses of pixels "D" and "C". |

VRAM Auxiliary

The manner in which a video RAM would be used in conjunction with the multi-processor is described with respect to FIG. **58** where the CCD input from the video camera or other video signal input would be clocked by A/D converter **5802** into shift register **5801**. Data can be shifted in or out of shift register **5801** into random memory matrix **5800** which in this case is the entire memory **15** shown in FIG. **1**. The S clock input is used to control the shifting of the information in or out shift register **5801**. Data out of the random memory matrix **5800** is controlled by the parallel processors in the manner previously discussed such that the information can be used in parallel or in serial to do image processing or image control or figure identification or to clean the specks from paper or other copies. The ISP accesses the data in the video RAM via port **21** in FIG. **58**. The purpose of the shift register interaction with the random memory matrix is so that information can come asynchronously from the outside and be loaded into random memory matrix without regard to the processor operational speed. At that point the transfer processor then begins the transfer of information in the manner previously discussed. The input information would typically include NTSC standards which would include the horizontal sync and blanking and vertical refresh signals, which could be used as timing signals to control the loading or unloading of information from random memory matrix **5800**.

The parallel processors can do many things with the data in random memory matrix **5800**. Some of these can be processed at the same time. For example, color information can be separated for later processing or for distribution in accordance with the intelligence of the data, as previously discussed, or the information content of the received data can be manipulated as discussed previously with respect to FIG. **11**.

Operational Relationships

The number of controllers and data paths, and how they are configured with memory can be used to help classify architectures with respect to MIMD and SIMD. In simplest form a "processor" consists of one or more controllers and one or more data paths.

FIG. **59** shows a typical MIMD configuration of four separate processing elements (**5901**, **5911**, **5921**, and **5931**) connected to instruction memories (**5904**, **5914**, **5924**, and **5934**) and data memories (**5907**, **5917**, **5927**, and **5937**) memories. Note while the instruction and data memories are shown separately, they may actually be the same physical memory. Each processing element consists of two major blocks, the controller (**5902**, **5912**, **5922**, **5932**) and data path (**5905**, **5915**, **5925**, **5935**). The instruction memories provide control instructions to their respective controllers via instruction buses (**5903**, **5913**, **5923**, **5933**). The data

memories are accessed under control of the respective controller and go to the data paths via the data buses (**5906**, **5916**, **5926**, **5936**). In some instances the instruction bus and data bus may in fact be the same physical bus, or the bus may actually be a set of buses configured in a crossbar arrangement. The controller controls the data path with a set of control signals (**5908**, **5918**, **5928**, **5938**).

In the MIMD configuration of FIG. **59**, each processor can be executing completely independent instructions on either distributed or shared data.

FIG. **60** shows a general SIMD configuration with a single controller **6002** and instruction memory **6004**. Instructions pass to the controller via bus **6003**. The single controller generates a single set of control signals **6000** that drive multiple data paths (**6010**, **6020**, **6030**, and **6040**). Each data path is shown connected to its own memory (**6012**, **6022**, **6032**, **6042**) via buses (**6011**, **6021**, **6031**, **6041**). While for simplicity each data path is shown having a single way of connecting to the data memories, there may in fact be various ways in which the data paths and data memories can be connected such as via a crossbar arrangement or via a sequential passing of data as shown in FIG. **8**.

In the SIMD configuration of FIG. **60**, a single instruction stream is used to control multiple data paths. In the general SIMD case, such as shown in FIG. **60**, there is only one controller for the multiple data paths.

FIG. **61** shows an embodiment of the system which is the subject of this invention, where the system is configured to behave in a MIMD mode. Via the crossbar **20**, each parallel processor (**100**, **101**, **102**, or **103**) can each use a memory within the memory space **10** as its instruction memory. The controller **3002** of each parallel processor thus can get its own different instruction stream. The synchronization signals in bus **40** are ignored by each parallel processor that is configured to be in the MIMD mode of operation. Since each controller can control via control signals **3112** a different data path **3100** and each data path can have access to a different memory via the crossbar, the system can operate in a MIMD mode.

FIG. **62** shows the same hardware of FIG. **61**, however, the parallel processors have been configured in a SIMD mode. In this mode, a single instruction memory is connected to all processors as described in the discussion related to FIG. **28**. With each of the SIMD organized parallel processors receiving the same instruction, each controller will issue generally the same control signals. For example, there may be differences in control signals due to data dependencies which must be taken account of. The synchronization signals in bus **40** serve two purposes: first they are used to get the parallel processors all started on the same instruction when transitioning from MIND to SIMD operation, and second once started in SIMD operation they keep the parallel processor from getting out of step due to events that may not affect all processors equally (for example if two processors access the same memory, the conflict resolution logic will allow one of the processors to access the memory before the other one).

Thus while there are multiple controllers, the net system result will be the same as that of the conventional SIMD organization of FIG. **60**. As has been previously described, some of the memories used as instruction memories in the MIMD mode are now free for use as data memories in the SIMD mode if necessary.

FIG. **63** shows the same hardware of FIGS. **61** and **62** but configured for synchronized MIMD operation. In this mode, each processor can execute different instructions, but the instructions are kept in step with each other by the synchronization signals of bus **40**. Typically in this mode of operation only a few of the instructions will differ between the processors, and it will be important to keep the processor accesses to memory in the same relative order.

FIG. **64** illustrates one of many other variations of how the same hardware as that in FIG. **61**, **62**, and **63** can be configured. In this example, processors **100** and **101** have been configured in SIMD operation by sharing a common instruction memory and by utilizing the synchronization signals of bus **40**. Processors **102** and **103** are utilizing separate instruction memories and are ignoring the synchronization signals of bus **40** and are thus running in MIMD mode. It should be noted that many other variations of the allocation of processors to MIMD, SIMD, or synchronized MIMD could be performed, and that any number of the processors could be allocated to any of the 3 modes.

Preferred Embodiment Features

Various important features of the preferred embodiment are summarized below.

A multi-processing system is shown with n processors, each processor operable from instruction sets provided from a memory source for controlling a number of different processes, which rely on the movement of data to or from one or more addressable memories with m memory sources each having a unique addressable space, where m is greater than n and having a switch matrix connected to the memories and connected to the processors and with circuitry for selectively and concurrently enabling the switch matrix on a processor cycle by cycle basis for interconnecting any of the processors with any of the memories for the interchange between the memories and the connected processors of instruction sets from one or more addressable memory spaces and data from other addressable memory spaces.

A processing system is shown with a plurality of processors, arranged to operate independent from each other from instructions executed on a cycle-by-cycle basis, with the system having a plurality of memories and circuitry for interconnecting any of the processors and any of the memories and including circuitry for interconnecting any of the processors and any of the memories and including circuitry for arranging a group of the processors into the SIMD operating mode where all of the processors of the group operate from the same instruction and circuitry operable on a processor cycle-by-cycle basis for changing at least some of the processors from operation in the SIMD operating mode to operation in the MIMD operational mode where each processor of the MIMD group operates from separate instructions provided by separate instruction memories.

An image processing system is shown with n processors, each processor operable from instruction streams provided from a memory source for controlling a number of different processes, which processes rely on the movement of data from m addressable memories each having a unique addressable space, and wherein m is greater than n and with a switch matrix connected to the memories and connected to the processors and including circuitry for selectively and concurrently interconnecting any of the processors with any of the memories so that the processors can function in a plurality of operational modes, each mode having particular processor memory relationships; and including an interprocessor communication bus for transmitting signals from any processor to any other selected processor for effecting said operational mode changes.

A multi-processing system is further shown comprising n processors, each processor operable from an instruction stream provided from a memory source for controlling a process, said process relying on the movement of data to or

from m addressable memories; each memory source having an addressable space and a switch matrix having links connected to the memories and connected to the processors; and including circuitry for splitting at least one of the links of the switch matrix for selectively and concurrently interconnecting any of the processors with any of the memories for the interchange between the memories and the connected processors of instruction streams from one or more memory addressable spaces and data from other addressable memory spaces.

A processing system is shown having a plurality of processors, each processor capable of executing its own instruction stream with control circuitry associated with each of the processors for establishing which of the processors are to be synchronized therewith and with instruction responsive circuitry associated with each processor for determining the boundary of instructions which are to be synchronized with the other synchronized processors and for setting a flag between such boundaries; and including circuitry in each processor for establishing a ready to execute mode; and control logic associated with each processor for inhibiting the execution of any instruction in the processor's instruction stream while each flag is set in the processor until all of the other processors established by the processor as being synchronized with the processor are in a ready to execute mode.

A multi-processing system is shown with m memories, each memory having a unique addressable space, with the total addressable space of the m memories defined by a single address word having n bits; and a memory address generation circuit for controlling access to addressable locations with the m memories according to the value of the bits of said address word; and with addition circuitry having carryover signals between bits for accepting an index value to be added to an existing address word to specify a next address location; and with circuitry operative for diverting the carryover signals from certain bits of said word which would normally be destined to toggle a next adjacent memory address word bit so that said carryover signal instead toggles a remote bit of the memory address word.

A circuit for indicating the number of "ones" in a binary string, the circuit having an AND gate having first and second inputs and an output; an XOR gate having first and second inputs and an output, the first input thereof connected to the first input of the AND gate, the second input connected to the second input of the AND gate; and where the second inputs of the AND and XOR gates receive one bit of the binary string and the output of XOR gate produces an output binary number representative of the number of "ones" in the bit of the binary string.

A multi-processing system is shown with n processors operable from instruction streams provided from a memory source for controlling a number of different processes, said processes relying on the movement of data from one or more addressable memories; and with m memory sources, each having a unique addressable space, some of the memories adapted to share instruction streams for the processors and the others of the memories adapted to store data for the processors; and with a switch matrix for establishing communication links between the processors and the memories, the switch matrix arranged with certain links providing dedicated communication between a particular processor and a particular one of the memories containing the instruction streams; and with circuitry for rearranging certain matrix links for providing data access to memories previously used for instructions, and circuitry concurrently operative with the rearranging circuitry for connecting all of the processors to a particular one of the certain links so that instructions from the instruction memory associated with the certain link are communicated to all of the system processors.

An imaging system having an image input, each image having a plurality of pixels, each pixel capable of having a plurality of data bits associated therewith; a memory; an image bus for transporting pixels from each image at the input to the memory; and circuitry for interpreting received images in accordance with parameters stored in the memory, the interpreting resulting from the parameters being applied to the pixels of each received image.

A switch matrix is arranged for interconnecting a plurality of first ports with a plurality of second ports, the switch matrix having: a plurality of vertical buses, each bus associated with a particular one of the first ports; and a plurality of individually operable crosspoints; and a plurality of horizontal buses connected to the second ports for connecting, via enabled ones of the cross points, one of the first ports and any one of the second ports and including circuitry at each crosspoint, associated with each vertical bus for handling contention between competing ones of the second ports for connection to said vertical bus.

## SUMMARY

Although the present invention has been described with respect to a specific preferred embodiment thereof, various changes and modifications may be suggested by one skilled in the art, and it is intended that the present invention encompass such changes and modifications as fall within the scope of the appended claims. Also, it should be understood that while emphasis has been placed on image processing the system described herein can as well be used for graphics, signalling processing, speech, sonar, radar and other high density real time processing. High definition TV and computing systems are a natural for this architecture.

APPENDIX

| Condition Codes | Description | Flags |
|---|---|---|
| 0 0 0 0 | Unconditional | Don't care |
| 0 0 0 1 | Lower than, Carry | C |
| 0 0 1 0 | Lower than or same | C+Z |
| 0 0 1 1 | Higher than | ~C.~Z |
| 0 1 0 0 | Higher than or same, No Carry | ~C |
| 0 1 0 1 | Equal, Zero | Z |
| 0 1 1 0 | Not equal, Not zero | ~Z |
| 0 1 1 1 | Less than | (N.~V)+(~N.V) |
| 1 0 0 0 | Less than or equal | (N.~V)+(~N.V)+Z |
| 1 0 0 1 | Greater than | (N.V.~Z)+(~N.~V.~Z) |
| 1 0 1 0 | Greater than or equal | (N.V.)+(~N.~V) |
| 1 0 1 1 | Positive | ~N.~Z |
| 1 1 0 0 | Negative | N |
| 1 1 0 1 | Non-negative | ~N |
| 1 1 1 0 | Overflow | V |
| 1 1 1 1 | No overflow | ~V |

**CONDITION CODES SUMMARY**

| scodes/dcodes | |
|---|---|
| 000:D0-D7 | 100:C0-C7 |
| 001:P0-P7 | 101:L0-L7 |
| 010:A0-A7 | 110:Q0-Q7 |
| 011:X0-X7 | 111:M0-M7 |

| | | |
|---|---|---|
| P0:MFLAGS | C0:LC1 | L0:LE1 |
| P1:OPTIONS | C1:LC2 | L1:LE2 |
| P2:SYNC/PP# | C2:LC3 | L2:LE3 |
| P3:INTEN | C3:RC1 | L3:LS |
| P4:INTFLG | C4:RC2 | L4:reserved |
| P5:SR | C5:RC3 | L5:reserved |
| P6:RET | C6:reserved | L6:reserved |
| P7:PC | C7:reserved | L7:reserved |

**REGISTER CODES SUMMARY**

| 2 bits | 4 bits | |
|---|---|---|
| 0 0 = * | 0 0 0 0 = 3op | 1 0 0 0 = pushl/popl |
| 0 1 = X+m | 0 0 0 1 = X+m | 1 0 0 1 = I+m |
| 1 0 = -1m | 0 0 1 0 = PushRet | 1 0 1 0 = move |
| 1 1 = 1+m | 0 0 1 1 = X-m | 1 0 1 1 = I-m |
| | 0 1 0 0 = +X | 1 1 0 0 = +I |
| | 0 1 0 1 = +Xm | 1 1 0 1 = +Im |
| | 0 1 1 0 = -X | 1 1 1 0 = -I |
| | 0 1 1 1 = -Xm | 1 1 1 1 = -Im |

**ADDRESSING MODE CODES SUMMARY**

125

~~A-2~~

## Absolute

ABS

*Syntax* ABS *src,dst*

*Operation* *|src|* → *dst*

*Operands*

D,D With parallel transfers

any,any No parallel transfers

*Routing*

| A | B | C | D | E |
|---|---|---|---|---|
| 0 | src | 0 | - | - |

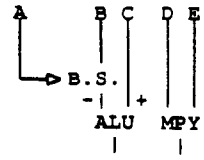


*Encoding*

| 31 | 27 | 22 | 19 | 16 | 11 | 8 | 5 | 0 |
|---|---|---|---|---|---|---|---|---|
| 0 0 0 0 | . . . . . | src | dst | Parallel transfers | | | | |
| 0 0 0 0 | . . . . . | src | dst | 0 0 0 0 0 | scde | dcde | 0 0 0 | 0 0 0 |

*Description* The absolute value of *src* is loaded into *dst*.

*Status Bits* N - Set to 0.

C - Unaffected.

V - 1 if an overflow occurs, 0 otherwise.

Z - 1 if zero result generated, 0 otherwise.

*M Bits* Unaffected

*Examples*

## Add

ADD

*Syntax* ADD *src1,src2,dst*

*Operation* *src1* + *src2* → *dst*

*Operands*

| | |
|---|---|
| D,D,D | With parallel transfers |
| any,D,any | No parallel transfers |
| D,any,any | No parallel transfers |
| D,I,D | No parallel transfers |
| any,I,src1 | No parallel transfers |

*Routing*

| A | B | C | D | E |
|---|---|---|---|---|
| 0 | src2 | src1 | - | - |

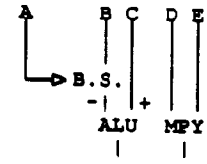


*Encoding*

| 31 | 30 | 27 | 22 | 19 | 16 | 15 | 11 | 8 | 5 | 2 | 0 |
|---|---|---|---|---|---|---|---|---|---|---|---|
| 1 | src2 | . . . . . | src1 | dst | Parallel transfers | | | | | | |
| 1 | src2 | . . . . . | src1 | dst | 0 0 0 0 0 | scde1 | dcde | scde2 | 0 0 0 | | |
| 0 1 1 1 | | . . . . . | src1 | dst | H | 16 bit immediate | | | | | |
| 0 0 1 1 | | . . . . . | code | dst | H | 16 bit immediate | | | | | |

*Description* The sum of *src1* and *src2* is loaded into *dst*. The immediate is assumed to be unsigned, and can be either the high or low half-word.

*Status Bits* N - 1 if negative result generated, 0 otherwise.

C - 1 if a carry occurs, 0 otherwise.

V - 1 if an overflow occurs, 0 otherwise.

Z - 1 if zero result generated, 0 otherwise.

*M Bits* Unaffected

*Examples*

## Add with Carry

ADDC

*Syntax* ADDC *src1,src2,dst*

*Operation* *src1* + *src2* + *C* → *dst*

*Operands*

| | |
|---|---|
| D,D,D | With parallel transfers |
| any,D,any | No parallel transfers |
| D,any,any | No parallel transfers |
| D,I,D | No parallel transfers |
| any,I,src1 | No parallel transfers |

*Routing*

| A | B | C | D | E |
|---|---|---|---|---|
| 0 | src2 | src1 | - | - |

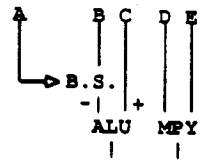


*Encoding*

| 31 | 30 | 27 | 22 | 19 | 16 | 15 | 11 | 8 | 5 | 2 | 0 |
|---|---|---|---|---|---|---|---|---|---|---|---|
| 1 | src2 | . . . . . | src1 | dst | Parallel transfers | | | | | | |
| 1 | src2 | . . . . . | src1 | dst | 0 0 0 0 0 | scde1 | dcde | scde2 | 0 0 0 | | |
| 0 1 1 1 | | . . . . . | src1 | dst | H | 16 bit immediate | | | | | |
| 0 0 1 1 | | . . . . . | code | dst | H | 16 bit immediate | | | | | |

*Description* The sum of *src1* and *src2* and the Carry flag is loaded into *dst*. The immediate is assumed to be unsigned, and can be either the high or low half-word.

*Status Bits* N - 1 if negative result generated, 0 otherwise.

C - 1 if a carry occurs, 0 otherwise.

V - 1 if an overflow occurs, 0 otherwise.

Z - 1 if zero result generated, 0 otherwise.

*M Bits* Unaffected

*Examples*

## Add Multiple bytes/Half-words — ADDM

*Syntax* ADDM *src1,src2,dst*

*Operation* *src1* ++++/++/+ *src2* → *dst*

*Operands*

| | |
|---|---|
| D,D,D | With parallel transfers |
| any,D,any | No parallel transfers |
| D,any,any | No parallel transfers |
| D,I,D | No parallel transfers |
| any,I,src1 | No parallel transfers |

*Routing*

| A | B | C | D | E |
|---|---|---|---|---|
| 0 | src2 | src1 | - | - |

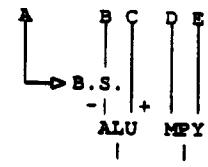


*Encoding*

| 31 | 30 | 27 | 22 | 19 | 16 | 15 | 11 | 8 | 5 | 2 | 0 |
|---|---|---|---|---|---|---|---|---|---|---|---|
| 1 | src2 | . . . . . | src1 | dst | Parallel transfers | | | | | | |
| 1 | src2 | . . . . . | src1 | dst | 0 0 0 0 0 | scde1 | dcde | scde2 | 0 0 0 | | |
| 0 1 1 1 | | . . . . . | src1 | dst | H | 16 bit immediate | | | | | |
| 0 0 1 1 | | . . . . . | code | dst | H | 16 bit immediate | | | | | |

*Description* The ALU bits in the OPTIONS register are used to split the ALU into four seperate bytes, two seperate half-words, or one word. The sum of each individual portion of *src1* and *src2* is loaded into *dst*. The individual carries are stored into the 4, 2 or 1 least-significant M bits respectively. The immediate is assumed to be unsigned, and can be either the high or low half-word.

*Status Bits* N - Unaffected

C - Unaffected

V - Unaffected

Z - 1 if zero result generated, 0 otherwise.

*M Bits* The carries from the individual adds are stored in the least-significant 4, 2 or 1 M bits, according to the ALU option bit values.

*Examples*

AND AND

*Syntax* AND *src1,src2,dst*

*Operation* *src1 AND src2 → dst*

*Operands*

| | |
|---|---|
| D,D,D | With parallel transfers |
| any,D,any | No parallel transfers |
| D,any,any | No parallel transfers |
| D,I,D | No parallel transfers |
| any,I,src1 | No parallel transfers |

*Routing*

| A | B | C | D | E |
|---|---|---|---|---|
| 0 | src2 | src1 | - | - |

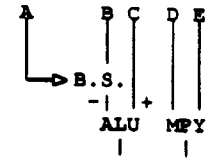


*Encoding*

| 31 | 30 | 27 | 22 | 19 | 16 | 15 | 11 | 8 | 5 | 2 | 0 |
|---|---|---|---|---|---|---|---|---|---|---|---|
| 1 | src2 | . . . . . | src1 | dst | Parallel transfers | | | | | | |
| 1 | src2 | . . . . . | src1 | dst | 0 0 0 0 0 | scde1 | dcde | scde2 | 0 0 0 | | |
| 0 1 1 1 | | . . . . . | src1 | dst | H | 16 bit immediate | | | | | |
| 0 0 1 1 | | . . . . . | code | dst | H | 16 bit immediate | | | | | |

*Description* The AND of *src1* and *src2* is loaded into *dst*. The immediate can be either the high or low half-word.

*Status Bits* N - Unaffected

C - Unaffected

V - Unaffected

Z - 1 if zero result generated, 0 otherwise.

*M Bits* Unaffected

*Examples*

## AND with Complement — ANDN

*Syntax* ANDN *src1,src2,dst*

*Operation* *src1 AND (NOT src2)* → *dst*

*Operands*

| | |
|---|---|
| D,D,D | With parallel transfers |
| any,D,any | No parallel transfers |
| D,any,any | No parallel transfers |
| D,I,D | No parallel transfers |
| any,I,src1 | No parallel transfers |

*Routing*

| A | B | C | D | E |
|---|---|---|---|---|
| 0 | src2 | src1 | - | - |

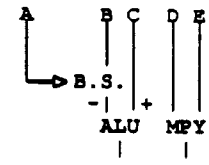


*Encoding*

| 31 | 30 | 27 | 22 | 19 | 16 | 15 | 11 | 8 | 5 | 2 | 0 |
|---|---|---|---|---|---|---|---|---|---|---|---|
| 1 | src2 | . . . . . | src1 | dst | Parallel transfers | | | | | | |
| 1 | src2 | . . . . . | src1 | dst | 0 0 0 0 0 | scde1 | dcde | scde2 | 0 0 0 | | |
| 0 1 1 1 | | . . . . . | src1 | dst | H | 16 bit immediate | | | | | |
| 0 0 1 1 | | . . . . . | code | dst | H | 16 bit immediate | | | | | |

*Description* The AND of *src1* with the 1s complement of *src2* is loaded into *dst*. The immediate can be either the high or low half-word.

*Status Bits* N - Unaffected

C - Unaffected

V - Unaffected

Z - 1 if zero result generated, 0 otherwise.

*M Bits* Unaffected

*Examples*

## Conditional Branch Relative to PC

BRcond

*Syntax* BRcond *24 bit immediate*

*Operation* *24 bit Immediate + PC conditionally loaded into PC*

*Operands*

I No parallel transfers

*Routing*

| A | B | C | D | E |
|---|---|---|---|---|
| 0 | Imm | PC | - | - |

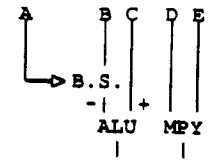


*Encoding*

| 31 | 27 | 23 | 0 |
|---|---|---|---|
| 0 0 1 0 | cond. | 24 bit immediate | |

*Description* The 24 bit immediate is added to the 24 bit Program Counter, and conditionally returned to the PC.

*Status Bits* N - Unaffected

C - Unaffected

V - Unaffected

Z - Unaffected

*M Bits* Unaffected

*Examples*

## Clear Bit

CLRB

*Syntax* CLRB *src1,src2,dst*

*Operation* *src1[src2]:=0, src1' → dst*

*Operands*

| | |
|---|---|
| D,D,D | With parallel transfers |
| any,D,any | No parallel transfers |
| D,any,any | No parallel transfers |
| D,I,D | No parallel transfers |
| any,I,src1 | No parallel transfers |

*Routing*

| A | B | C | D | E |
|---|---|---|---|---|
| src2 | 1 | src1 | - | - |

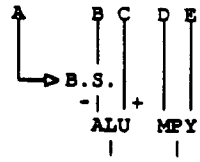


*Encoding*

| 31 30 | 27 | 22 | 19 | 16 15 | 11 | 8 | 5 | 2 | 0 |
|---|---|---|---|---|---|---|---|---|---|
| 1 | src2 | . . . . . | src1 | dst | Parallel transfers | | | | |
| 1 | src2 | . . . . . | src1 | dst | 0 0 0 0 0 | scde1 | dcde | scde2 | 0 0 0 |
| 0 1 1 1 | . . . . . | | src1 | dst | H | 16 bit immediate | | | |
| 0 0 1 1 | . . . . . | | code | dst | H | 16 bit immediate | | | |

*Description* The bit within *src1* pointed to by the least-significant 5-bits of *src2* is set to zero. The result is loaded into *dst*. Only the least-significant 5 bits of the immediate are significant.

*Status Bits* N - Unaffected

C - Unaffected

V - Unaffected

Z - 1 if zero result generated, 0 otherwise.

*M Bits* Unaffected

*Examples*

## Compare

CMP

*Syntax* CMP *src1,src2*

*Operation* *src1* - *src2*, status bits set on result.

*Operands*

| | |
|---|---|
| D,D | With parallel transfers |
| any,D | No parallel transfers |
| D,any | No parallel transfers |
| D,I | No parallel transfers |
| any,I | No parallel transfers |

*Routing*

| A | B | C | D | E |
|---|---|---|---|---|
| 0 | src2 | src1 | - | - |

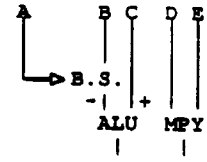


*Encoding*

| 31 | 30 | 27 | 22 | 19 | 16 | 15 | 11 | 8 | 5 | 2 | 0 |
|---|---|---|---|---|---|---|---|---|---|---|---|
| 1 | src2 | . . . . . | src1 | 0 0 0 | Parallel transfers | | | | | | |
| 1 | src2 | . . . . . | src1 | 0 0 0 | 0 0 0 0 0 | scde1 | 0 0 0 | scde2 | 0 0 0 | | |
| 0 1 1 1 | | . . . . . | src1 | 0 0 0 | H | 16 bit immediate | | | | | |
| 0 0 1 1 | | . . . . . | code | src1 | H | 16 bit immediate | | | | | |

*Description* *src2* is subtracted from *src1*, but the result is not loaded into any destination. The status bits are set according to the result. The immediate is assumed to be unsigned, and can be either the high or low half-word.

*Status Bits* N - 1 if negative result generated, 0 otherwise.

C - 1 if a carry occurs, 0 otherwise.

V - 1 if an overflow occurs, 0 otherwise.

Z - 1 if zero result generated, 0 otherwise.

*M Bits* Unaffected

*Examples*

## Compare Multiple Bytes/half-words — CMPM

*Syntax* CMPM *src1,src2*

*Operation* *src1* ----/--/- *src2*, M bits set on result(s).

*Operands*

| | |
|---|---|
| D,D | With parallel transfers |
| any,D | No parallel transfers |
| D,any | No parallel transfers |
| D,I | No parallel transfers |
| any,I | No parallel transfers |

*Routing*

| A | B | C | D | E |
|---|---|---|---|---|
| 0 | src2 | src1 | - | - |

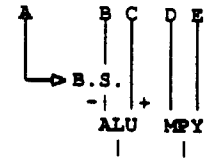


*Encoding*

| 31 | 30 | 27 | 22 | 19 | 16 | 15 | 11 | 8 | 5 | 2 | 0 |
|---|---|---|---|---|---|---|---|---|---|---|---|
| 1 | src2 | . . . . . | src1 | 0 0 0 | Parallel transfers | | | | | | |
| 1 | src2 | . . . . . | src1 | 0 0 0 | 0 0 0 0 0 | scde1 | 0 0 0 | scde2 | 0 0 0 | | |
| 0 1 1 1 | | . . . . . | src1 | 0 0 0 | H | 16 bit immediate | | | | | |
| 0 0 1 1 | | . . . . . | code | src1 | H | 16 bit immediate | | | | | |

*Description* The ALU bits in OPTIONS are used to split the ALU into four seperate bytes, two seperate half-words, or one word. The portions of *src2* are subtracted from *src1* and then each result is compared with zero. The individual zero bits are stored into the 4, 2 or 1 least-significant M bits respectively. Carry flag is loaded into *dst*. The immediate is assumed to be unsigned, and can be either the high or low half-word.

*Status Bits* N - Unaffected

C - Unaffected

V - Unaffected

Z - 1 if zero result generated, 0 otherwise.

*M Bits* The zero bits of the individual compares are stored into th 4, 2 or 1 least-significant M bits, according to the ALU option bits.

*Examples*

## Divide Iteration

DIVI

*Syntax* DIVI *src1,src2,(src1)*

*Operation* *If src1 - src2 < 0, then src1 := src1 × 2, else src1 := ((src1 - src2) × 2) + 1*

*Operands*

| | |
|---|---|
| D,D,src1 | With parallel transfers |
| any,D,src1 | No parallel transfers |
| D,any,src1 | No parallel transfers |
| D,I,src1 | No parallel transfers |
| any,I,src1 | No parallel transfers |

*Routing*

| A | B | C | D | E |
|---|---|---|---|---|
| 0 | src2 | src1 | - | - |

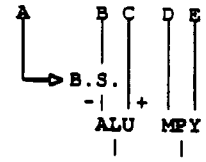


*Encoding*

| 31 | 30 | 27 | 22 | 19 | 16 | 15 | 11 | 8 | 5 | 2 | 0 |
|---|---|---|---|---|---|---|---|---|---|---|---|
| 1 | src2 | . . . . . | src1 | 0 0 0 | | Parallel transfers | | | | | |
| 1 | src2 | . . . . . | src1 | 0 0 0 | 0 | 0 0 0 0 | scde1 | 0 0 0 | scde2 | 0 0 0 | |
| 0 1 1 1 | | . . . . . | src1 | 0 0 0 | H | 16 bit immediate | | | | | |
| 0 0 1 1 | | . . . . . | code | src1 | H | 16 bit immediate | | | | | |

*Description* *src2* is subtracted from *src1*. If the result is negative then *src1* is left-shifted by one bit, and a zero is inserted into bit 0. This is then loaded into *src1*. If however the result is zero or positive then the result of the subtraction is left-shifted one bit and a 1 is inserted into bit 0. This is then loaded into *src1*. The immediate is assumed to be unsigned, and can be either the high or low half-word.

*Status Bits* N - Unaffected

C - Unaffected

V - Unaffected

Z - Unaffected

*M Bits* Unaffected

*Examples*

## Idle until interrupt

IDLE

*Syntax* IDLE

*Operation* *wait for an enabled interrupt*

*Operands*

None With parallel transfers

*Encoding*

| 31 | 27 | 22 | 19 | 16 | 0 |
|---|---|---|---|---|---|
| 0 0 0 0 | . . . . . | 0 0 0 | 0 0 0 | Parallel transfers | |

*Description* Instruction waits until an enabled interrupt occurs before proceding. If parallel transfers are coded then they will happen after the interrupt has occurred, but before the interrupt routine is executed.

*Status Bits* N - Unaffected.

C - Unaffected.

V - Unaffected.

Z - Unaffected.

*M Bits* Unaffected

*Examples*

## Lock MIMD PPs together

LCK

*Syntax* LCK

*Operation* *wait for MIMD PPs to synchronise*

*Operands*

None With parallel transfers

*Encoding*

| 31 | 27 | 22 | 19 | 16 | 0 |
|---|---|---|---|---|---|
| 0 0 0 0 | . . . . . | 0 0 0 | 0 0 0 | Parallel transfers | |

*Description* This instruction is used to begin a piece of MIMD synchronised PP code. It will cause the PP to wait until all the PPs indicated by 1s in the SYNC register are in sync with each other. The following instructions will then be *fetched* in-step with the other MIMD PPs. (Execution of the Address and Execute pipeline stages will occur as each successive instruction is synchronously fetched). ULCK will terminate synchronous code execution.

*Status Bits* N - Unaffected.

C - Unaffected.

V - Unaffected.

Z - Unaffected.

*M Bits* Unaffected

*Examples*

## Conditional Load LDcond

*Syntax* LDcond **An(mode),dst*

*Operation* **src conditionally → dst*

*Operands*

cond A0-A7(mode{g },<Dn,An,Xn,Pn> ) No parallel Data Unit operation.

Addressing modes pre- or post-indexing

+/- 3 bit immediate or +/- an indeX register

modify Address register, or leave unaltered

*Encoding*

| 31 | 27 | 23 | 22 | 21 | 18 | 16 | 15 | 11 | 10 | 8 | 5 | 2 | 0 |
|---|---|---|---|---|---|---|---|---|---|---|---|---|---|
| 0 1 1 0 | cond. | 0 | N | 0 0 0 | 0 0 | 0 | mod | 0 | cde | A | dst | Imm/X | |

*Description* This instruction will conditionally load a Dn, An, Xn or Pn register from an indirect address generated from any Address register. (Mn, Qn, Cn or Ln cannot be directly loaded from memory except with a POP instruction). If specifying an immediate, then +/- 0 to 7 are available. If specifying an index register, then it must be in the same Address sub-unit as the Address register. If the address is non-aligned, then this will load only the lower byte(s). Note that if a register modify is specified then this will happen unconditionally. Only the actual load is conditional. In addition to the normal condition codes the condition "never" is also available. This allows Address register modify but without loading a register.

*Status Bits* N - Unaffected.

C - Unaffected.

V - Unaffected.

Z - Unaffected.

*M Bits* Unaffected

*Examples*

## Conditional Load Immediate

LDIcond

*Syntax* LDIcond *16-bit immediate.dst*

*Operation* *16-bit immediate conditionally loaded into dst*

*Operands*

I,any No parallel transfers

*Routing*

| A | B | C | D | E |
|---|---|---|---|---|
| 0 | src | 0 | - | - |

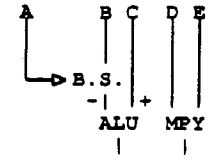


*Encoding*

| 31 | 27 | 2322 | 19 | 1615 | 0 |
|---|---|---|---|---|---|
| 0 1 1 0 | cond. | 1 | dcde | dst | S | 16 bit immediate |

*Description* The 17-bit signed immediate is loaded into *dst* only if *cond* is true. The sign bit is extended through to bit 31.

*Status Bits* N - Unaffected.

C - Unaffected.

V - Unaffected.

Z - Unaffected.

*M Bits* Unaffected

*Examples*

## Load Loop Start or Program Counter

LDLS,LDPC

*Syntax* LD *24-bit immediate,dst*

*Operation* *24-bit immediate loaded into dst*

*Operands*

I,LS No parallel transfers

I,PC No parallel transfers

*Encoding*

| 31 | 23 | 0 |
|---|---|---|
| 0 0 0 1 1 1 1 | . | 24 bit immediate |

*Description* Load the 24-bit immediate into either the Loop Start address register, or the Program Counter.

*Status Bits* N - Unaffected.

C - Unaffected.

V - Unaffected.

Z - Unaffected.

*M Bits* Unaffected

*Examples*

Conditional Load and Load LD||LDcond

*Syntax* LDcond **Am(mode),dst1* || LD **An(mode),dst2*

*Operation* {I *src1 conditionally {s.} dst1, *src2 conditionally → dst2}

*Operands*

cond A0-A3(mode{g},Dm A4-A7(mode),Dn ) No parallel Data Unit operation.

Addressing modes post-increment by 1 with Address register modify

pre-decrement by 1 with Address register modify

post-increment by A reg's associated indeX register with Address register modify

indirect without indexing

*Encoding*

| 31 | 27 | 23 | 22 | 21 | 18 | 16 | 15 | 11 | 10 | 8 | 7 | 5 | 2 | 0 |
|---|---|---|---|---|---|---|---|---|---|---|---|---|---|---|
| 0 1 1 0 | cond. | 0 | N | 0 0 0 | 0 0 | 1 | mdg | mdl | 0 | A47 | 0 | A03 | Dg | D1 |

*Description* This instruction will conditionally load *dst1* via the Global bus from an indirect address generated from an Address register in the Global sub-unit (A0-A3). In parallel with this it will conditionally (same condition) load *dst2* via the Local bus from an indirect address generated from an Address register in the Local sub-unit (A4-A7). Indirect, post-increment by 1, pre-decrement by 1 and post-increment by X addressing modes are supported independantly on the two buses. The indeX register(s) used have the same subscript(s) as the Address register(s). The *dsts* must be D registers. Note that if register modifies are specified then these will happen unconditionally. Only the actual loads are conditional. In addition to the normal condition codes the condition "never" is also available. This allows Address register modifies but without loading registers.

*Status Bits* N - Unaffected.

C - Unaffected.

V - Unaffected.

Z - Unaffected.

*M Bits* Unaffected

*Examples*

## Conditional Load and Store — LD||STcond

*Syntax* LDcond **Am(mode),dst1* || ST *src2,*An(mode)*

*Operation* {I *src1 conditionally {s.} dst1, src2 conditionally {s.} *dst2}

*Operands*

cond A0-A3(mode{g},Dm Dn,A4-A7(mode) ) No parallel Data Unit operation.

Addressing modes post-increment by 1 with Address register modify

pre-decrement by 1 with Address register modify

post-increment by A reg's associated indeX register with Address register modify

indirect without indexing

*Encoding*

| 31 | 27 | 23 | 22 | 21 | 18 | 16 | 15 | 11 | 10 | 8 | 7 | 5 | 2 | 0 |
|---|---|---|---|---|---|---|---|---|---|---|---|---|---|---|
| 0 1 1 0 | cond. | 0 | N | 0 0 0 | 0 0 | 1 | mdg | mdl | 0 | A47 | 1 | A03 | Dg | Dl |

*Description* This instruction will conditionally load *dst1* via the Global bus from an indirect address generated from an Address register in the Global sub-unit (A0-A3). In parallel with this it will conditionally (same condition) store *src2* via the Local bus to an indirect address generated from an Address register in the Local sub-unit (A4-A7). Indirect, post-increment by 1, pre-decrement by 1 and post-increment by X addressing modes are supported independantly on the two buses. The indeX register(s) used have the same subscript(s) as the Address register(s). *dst1* and *src2* must be D registers. Note that if register modifies are specified then these will happen unconditionally. Only the actual loads and stores are conditional. In addition to the normal condition codes the condition "never" is also available. This allows Address register modifies but without loading or storing anything.

*Status Bits* **N - Unaffected.**

**C - Unaffected.**

**V - Unaffected.**

**Z - Unaffected.**

*M Bits* **Unaffected**

*Examples*

## Load Upper Conditionally — LDUcond

*Syntax* LDUcond **An(mode),dst*

*Operation* **src conditionally → dst*

*Operands*

A0-A7(mode{g }),Dn ) No parallel Data Unit operation.

Addressing modes pre- or post-indexing

+/- 3 bit immediate or +/- an indeX register

modify Address register, or leave unaltered

*Encoding*

| 31 | 27 | 232221 | 18 | 1615 | 1110 | 8 | 5 | 2 0 |
|---|---|---|---|---|---|---|---|---|
| 0 1 1 0 | cond. | 0 N 0 0 0 | 1 0 | 0 mod | 0 cde | A | dst | Imm/X |

*Description* For use with non-aligned addresses. Conditionally loads the upper portion of a PP register from an indirect non-aligned address generated from any Address register. The destination PP register must be a D register. (Non-aligned loads are not supported to any other PP registers). If specifying an immediate then +/- 0 to 7 are available. If specifying an index register then it must be in the same Address sub-unit as the Address Note that if register modify is specified then this will happen unconditionally. Only the actual load is conditional. In addition to the normal condition codes the condition "never" is also available. This allows Address register modify but without loading a register. register.

*Status Bits* N - Unaffected.

C - Unaffected.

V - Unaffected.

Z - Unaffected.

*M Bits* Unaffected

*Examples*

## Left-most 1 LM1

*Syntax* LM1 *src,dst*

*Operation* *bit number of left-most 1 in src → dst*

*Operands*

D,D With parallel transfers

any,any No parallel transfers

*Routing*

| A | B | C | D | E |
|---|---|---|---|---|
| 0 | src | 0 | - | - |

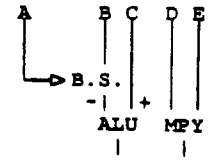


*Encoding*

| 31 | 27 | 22 | 19 | 16 | 11 | 8 | 5 | 0 |
|---|---|---|---|---|---|---|---|---|
| 0 0 0 0 | . . . . . | src | dst | Parallel transfers | | | | |
| 0 0 0 0 | . . . . . | src | dst | 0 0 0 0 0 | scde | dcde | 0 0 0 | 0 0 0 |

*Description* The bit number of the left-most 1 in *src* is loaded into *dst*.

*Status Bits* N - Unaffected.

C - Unaffected.

V - Unaffected.

Z - 1 if *src* contained all zeros, 0 otherwise.

*M Bits* Unaffected

*Examples*

D to D Register Move MOV

*Syntax* MOV *src,dst*

*Operation* *src* → *dst*

*Operands*

D,D With parallel transfers

*Routing*

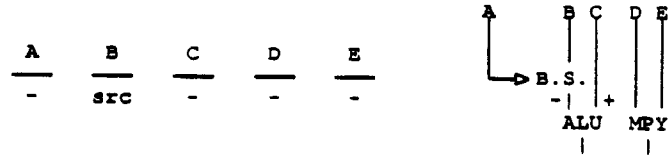


*Encoding*

| 31 | 27 | 22 | 19 | 16 . 0 |
|---|---|---|---|---|
| 0 0 0 0 | . . . . . | src | dst | Parallel transfers |

*Description* Any D register *src* is moved to any D register *dst*.

*Status Bits* N - 1 if *src* is negative, 0 otherwise

C - Unaffected.

V - Unaffected.

Z - 1 if *src* is zero, 0 otherwise

*M Bits* Unaffected

*Examples*

## Conditional Move

MOVcond

*Syntax* MOVcond *src,dst*

*Operation* *src conditionally → dst*

*Operands*

cond any,any No parallel Data Unit operation.

*Encoding*

| 31 | 27 | 23 | 22 | 21 | 18 | 16 | 11 | 8 | 5 | 2 | 0 |
|---|---|---|---|---|---|---|---|---|---|---|---|
| 0 1 1 0 | cond. | 0 | N | 0 0 0 | 0 0 | 0 1 0 1 0 | scde | dcde | src | dst | |

*Description* This instruction will conditionally move any register *src* to any other register *dst*.

*Status Bits* N - Unaffected.

C - Unaffected.

V - Unaffected.

Z - Unaffected.

*M Bits* Unaffected

*Examples*

## Signed Multiply MPY

*Syntax* MPY *src1,src2,dst*

*Operation* *src1* × *src2* → *dst*

*Operands*

| | |
|---|---|
| D,D,D | With parallel transfers |
| any,D,any | No parallel transfers |
| D,any,any | No parallel transfers |
| D,I,D | No parallel transfers |
| any,I,src1 | No parallel transfers |

*Routing*

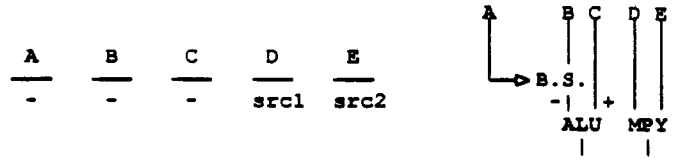


*Encoding*

| 31 | 30 | 27 | 22 | 19 | 16 | 11 | 8 | 5 | 2 | 0 |
|---|---|---|---|---|---|---|---|---|---|---|
| 1 | src2 | . . . . . | src1 | dst | Parallel transfers | | | | | |
| 1 | src2 | . . . . . | src1 | dst | 0 0 0 0 0 | scde1 | dcde | scde2 | 0 0 0 | |
| 0 1 1 1 | | . . . . . | src1 | dst | H | 16 bit immediate | | | | |
| 0 0 1 1 | | . . . . . | code | dst | H | 16 bit immediate | | | | |

*Description* The 32-bit product of the signed 16 LS bits of *src1* and the signed 16 LS bits of *src2* is loaded into *dst*. The immediate is assumed to be a signed 16-bit quantity.

*Status Bits* N - 1 if negative result generated, 0 otherwise.

C - Unaffected

V - Unaffected

Z - 1 if zero result generated, 0 otherwise.

*M Bits* Unaffected

*Examples*

## Unsigned Multiply

MPYU

*Syntax* MPYU *src1,src2,dst*

*Operation* *src1* × *src2* → *dst*

*Operands*

| | |
|---|---|
| D,D,D | With parallel transfers |
| any,D,any | No parallel transfers |
| D,any,any | No parallel transfers |
| D,I,D | No parallel transfers |
| any,I,src1 | No parallel transfers |

*Routing*

| A | B | C | D | E |
|---|---|---|---|---|
| - | - | - | src1 | src2 |

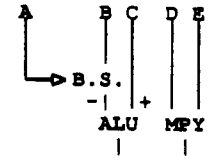


*Encoding*

| 31 | 27 | 22 | 19 | 16 | 0 |
|---|---|---|---|---|---|
| 1 | src2 | . . . . . | src1 | dst | Parallel transfers |
| 1 | src2 | . . . . . | src1 | dst | 0 0 0 0 0 \| scde1 \| dcde \| scde2 \| 0 0 0 |
| 0 1 1 1 | . . . . . | src1 | dst | H | 16 bit immediate |
| 0 0 1 1 | . . . . . | code | dst | H | 16 bit immediate |

*Description* The 32-bit product of the unsigned 16 LS bits of *src1* and the unsigned 16 LS bits of *src2* is loaded into *dst*. The immediate is assumed to be an unsigned 16-bit quantity.

*Status Bits* N - Unaffected

C - Unaffected

V - Unaffected

Z - 1 if zero result generated, 0 otherwise.

*M Bits* Unaffected

*Examples*

## Multiply with Parallel Add

MPY||ADD

*Syntax* MPY *src1,src2,dst1* || ADD *src3,dst2*

*Operation* *src1* × *src2* → *dst1*, *dst2* + *src3* → *dst2*

*Operands*

D4-7,D0-3,D2-5,D0-3,D2-5 With parallel transfers

*Routing*

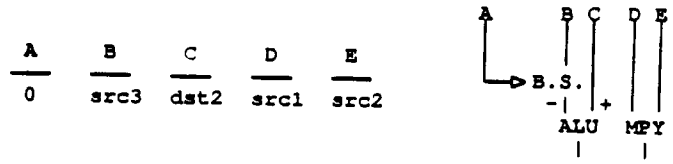


*Encoding*

| 31 | 27 | 26 | 24 | 22 | 20 | 18 | 16 | 0 |
|---|---|---|---|---|---|---|---|---|
| 1 1 0 0 | 0 | sc3 | ds2 | sc1 | sc2 | ds1 | Parallel transfers | |

*Description* The 32-bit product of the signed 16 LS bits of *src1* and the signed 16 LS bits of *src2* is loaded into *dst1*. In parallel, the sum of *src3* and *dst2* is generated and loaded into *dst2*. Status bits are set according to the add result. The register range of the operands is subject to revision.

*Status Bits* N - 1 if negative result generated, 0 otherwise.

C - 1 if carry occurs, 0 otherwise

V - 1 if overflow occurs, 0 otherwise

Z - 1 if zero result generated, 0 otherwise.

*M Bits* Unaffected

*Examples*

## Multiply with Parallel Shift and Add — MPY||SADD

*Syntax* MPY *src1,src2,dst1* || SADD *src3,dst2*

*Operation* *src1* × *src2* → *dst1*, *dst2* + (*src3 shifted by predefined amount*) → *dst2*

*Operands*

D4-7,D0-3,D2-5,D0-3,D2-5 With parallel transfers

*Routing*

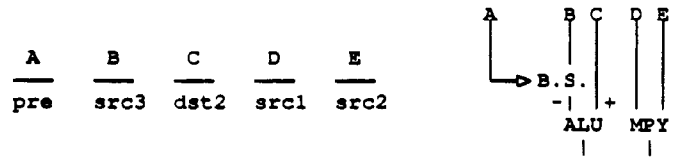


*Encoding*

| 31 | 27 | 26 | 24 | 22 | 20 | 18 | 16 | 0 |
|---|---|---|---|---|---|---|---|---|
| 1 1 0 1 | 1 | sc3 | ds2 | sc1 | sc2 | ds1 | Parallel transfers | |

*Description* The 32-bit product of the signed 16 LS bits of *src1* and the signed 16 LS bits of *src2* is loaded into *dst1*. In parallel, *src3*, shifted by a predetermined shift amount contained in the OPTIONS register, is added to *dst2*. The result is loaded into *dst2*. Status bits are set according to the add result. The register range of the operands is subject to revision.

*Status Bits* N - 1 if negative result generated, 0 otherwise.

C - 1 if carry occurs, 0 otherwise

V - 1 if overflow occurs, 0 otherwise

Z - 1 if zero result generated, 0 otherwise.

*M Bits* Unaffected

*Examples*

## Multiply with Parallel Shift and Subtract — MPY||SSUB

*Syntax* MPY *src1,src2,dst1* || SSUB *src3,dst2*

*Operation* *src1* × *src2* → *dst1*, *dst2* - (*src3 shifted by predefined amount*) → *dst2*

*Operands*

D4-7,D0-3,D2-5,D0-3,D2-5 With parallel transfers

*Routing*

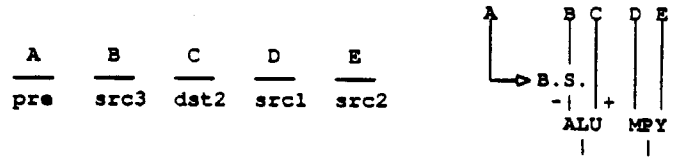


*Encoding*

| 31 | 27 | 26 | 24 | 22 | 20 | 18 | 16 | 0 |
|---|---|---|---|---|---|---|---|---|
| 1 1 0 1 | 1 | sc3 | ds2 | sc1 | sc2 | ds1 | Parallel transfers | |

*Description* The 32-bit product of the signed 16 LS bits of *src1* and the signed 16 LS bits of *src2* is loaded into *dst1*. In parallel, *src3*, shifted by a predetermined shift amount contained in the OPTIONS register, is subtracted from *dst2*. The result is loaded into *dst2*. Status bits are set according to the subtract result. The register range of the operands is subject to revision.

*Status Bits* N - 1 if negative result generated, 0 otherwise.

C - 1 if carry occurs, 0 otherwise

V - 1 if overflow occurs, 0 otherwise

Z - 1 if zero result generated, 0 otherwise.

*M Bits* Unaffected

*Examples*

## Multiply with Parallel Subtract

MPY||SUB

*Syntax* MPY *src1,src2,dst1* || SUB *src3,dst2*

*Operation* *src1* × *src2* → *dst1*, *dst2* - *src3* → *dst2*

*Operands*

D4-7,D0-3,D2-5,D0-3,D2-5 With parallel transfers

*Routing*

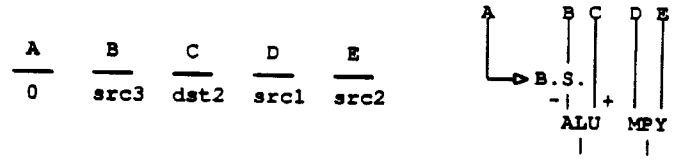


*Encoding*

| 31 | 27 | 26 | 24 | 22 | 20 | 18 | 16 | 0 |
|---|---|---|---|---|---|---|---|---|
| 1 1 0 0 | 0 | sc3 | ds2 | sc1 | sc2 | ds1 | Parallel transfers | |

*Description* The 32-bit product of the signed 16 LS bits of *src1* and the signed 16 LS bits of *src2* is loaded into *dst1*. In parallel, the *src3* is subtracted from *dst2* and the result loaded into *dst2*. Status bits are set according to the subtract result. The register range of the operands is subject to revision.

*Status Bits* N - 1 if negative result generated, 0 otherwise.

C - 1 if carry occurs, 0 otherwise

V - 1 if overflow occurs, 0 otherwise

Z - 1 if zero result generated, 0 otherwise.

*M Bits* Unaffected

*Examples*

## Merge Multiple bytes/half-words — MRGM

*Syntax* MRGM *src1,src2,dst*

*Operation* *src1* <*merge*> *src2* → *dst*

*Operands*

| | |
|---|---|
| D,D,D | With parallel transfers |
| any,D,any | No parallel transfers |
| D,any,any | No parallel transfers |
| D,I,D | No parallel transfers |
| any,I,src1 | No parallel transfers |

*Routing*

| A | B | C | D | E |
|---|---|---|---|---|
| 0 | src2 | src1 | - | - |

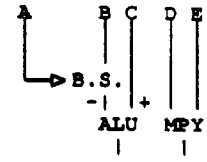


*Encoding*

| 31 | 30 | 27 | 22 | 19 | 16 | 15 | 11 | 8 | 5 | 2 | 0 |
|---|---|---|---|---|---|---|---|---|---|---|---|
| 1 | src2 | . . . . . | src1 | dst | Parallel transfers | | | | | | |
| 1 | src2 | . . . . . | src1 | dst | 0 0 0 0 0 | scde1 | dcde | scde2 | 0 0 0 | | |
| 0 1 1 1 | | . . . . . | src1 | dst | H | 16 bit immediate | | | | | |
| 0 0 1 1 | | . . . . . | code | dst | H | 16 bit immediate | | | | | |

*Description* The ALU bits in the OPTIONS register are used to split the ALU into four seperate bytes, two seperate half-words, or one word. The 4, 2 or 1 least-significant M bits respectively are used to multiplex the individual portions of *src1* and *src2* into *dst*. Where an M bit is a 1 the portion of the result comes from *src2*, and where the M bit is a 0 the portion of the result comes from *src1*. The immediate is assumed to be unsigned, and can be either the high or low half-word.

*Status Bits* N - Unaffected

C - Unaffected

V - Unaffected

Z - 1 if zero result generated, 0 otherwise.

*M Bits* Unaffected

*Examples*

NAND NAND

*Syntax* NAND *src1,src2,dst*

*Operation* *src1 NAND src2 → dst*

*Operands*

| | |
|---|---|
| D,D,D | With parallel transfers |
| any,D,any | No parallel transfers |
| D,any,any | No parallel transfers |
| D,I,D | No parallel transfers |
| any,I,src1 | No parallel transfers |

*Routing*

| A | B | C | D | E |
|---|---|---|---|---|
| 0 | src2 | src1 | - | - |

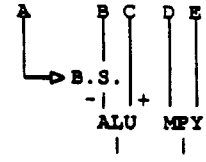


*Encoding*

| 31 | 30 | 27 | 22 | 19 | 16 | 15 | 11 | 8 | 5 | 2 | 0 |
|---|---|---|---|---|---|---|---|---|---|---|---|
| 1 | src2 | . . . . . | src1 | dst | Parallel transfers | | | | | | |
| 1 | src2 | . . . . . | src1 | dst | 0 0 0 0 0 | scde1 | dcde | scde2 | 0 0 0 | | |
| 0 1 1 1 | | . . . . . | src1 | dst | H | 16 bit immediate | | | | | |
| 0 0 1 1 | | . . . . . | code | dst | H | 16 bit immediate | | | | | |

*Description* The NAND of *src1* and *src2* is loaded into *dst*. The immediate can be either the high or low half-word.

*Status Bits* N - Unaffected

C - Unaffected

V - Unaffected

Z - 1 if zero result generated, 0 otherwise.

*M Bits* Unaffected

*Examples*

## Negate

**NEG**

*Syntax* NEG *src,dst*

*Operation* *2s complement of src → dst*

*Operands*

D,D With parallel transfers

any,any No parallel transfers

*Routing*

| A | B | C | D | E |
|---|---|---|---|---|
| 0 | src | 0 | - | - |

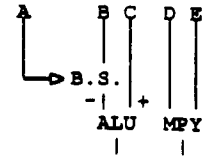


*Encoding*

| 31 | 27 | 22 | 19 | 16 | 11 | 8 | 5 | 2 | 0 |
|---|---|---|---|---|---|---|---|---|---|
| 0 0 0 0 | . . . . . | src | dst | Parallel transfers | | | | | |
| 0 0 0 0 | . . . . . | src | dst | 0 0 0 0 0 | scde | dcde | 0 0 0 | 0 0 0 | |

*Description* The 2s complement of *src* is loaded into *dst*.

*Status Bits* N - 1 if negative result generated, 0 otherwise.

C - 1 if a borrow occurs, 0 otherwise.

V - 1 if an overflow occurs, 0 otherwise.

Z - 1 if zero result generated, 0 otherwise.

*M Bits* Unaffected

*Examples*

## Negate with Borrow — NEGB

*Syntax* NEGB *src,dst*

*Operation* *(2s complement of src) - C → dst*

*Operands*

D,D With parallel transfers

any,any No parallel transfers

*Routing*

| A | B | C | D | E |
|---|---|---|---|---|
| 0 | src | 0 | - | - |

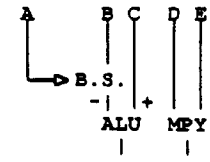


*Encoding*

| 31 | 27 | 22 | 19 | 16 | 11 | 8 | 5 | 2 | 0 |
|---|---|---|---|---|---|---|---|---|---|
| 0 0 0 0 | . . . . . | src | dst | Parallel transfers | | | | | |
| 0 0 0 0 | . . . . . | src | dst | 0 0 0 0 0 | scde | dcde | 0 0 0 | 0 0 0 | |

*Description* The 2s complement of *src* is decremented by 1 if the carry bit is set, and the result is loaded into *dst*.

*Status Bits* N - 1 if negative result generated, 0 otherwise.

C - 1 if a borrow occurs, 0 otherwise.

V - 1 if an overflow occurs, 0 otherwise.

Z - 1 if zero result generated, 0 otherwise.

*M Bits* Unaffected

*Examples*

**NOP** **NOP**

*Syntax* **NOP**

*Operation* *No operation*

*Operands* None

*Encoding*

| 31 | 27 | 16 | 11 | 0 |
|---|---|---|---|---|
| 0 1 1 0 | x x x x x x x x x x x | 0 0 0 0 0 | x x x x x x x x x x x | |

*Description* No operation. It is actually coded as a conditional transfer, but where the transfer is the operand qualifier for a data unit. Only the indicated bits are decoded, the rest are don't care.

*Status Bits* **N - Unaffected.**

**C - Unaffected.**

**V - Unaffected.**

**Z - Unaffected.**

*M Bits* **Unaffected**

*Examples*

NOR NOR

*Syntax* NOR *src1,src2,dst*

*Operation* *src1 NOR src2 → dst*

*Operands*

| | |
|---|---|
| D,D,D | With parallel transfers |
| any,D,any | No parallel transfers |
| D,any,any | No parallel transfers |
| D,I,D | No parallel transfers |
| any,I,src1 | No parallel transfers |

*Routing*

| A | B | C | D | E |
|---|---|---|---|---|
| 0 | src2 | src1 | - | - |

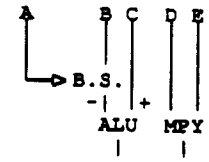


*Encoding*

| 31 | 30 | 27 | 22 | 19 | 16 | 15 | 11 | 8 | 5 | 2 | 0 |
|---|---|---|---|---|---|---|---|---|---|---|---|
| 1 | src2 | . . . . . | src1 | dst | Parallel transfers | | | | | | |
| 1 | src2 | . . . . . | src1 | dst | 0 0 0 0 0 | scde1 | dcde | scde2 | 0 0 0 | | |
| 0 1 1 1 | | . . . . . | src1 | dst | H | 16 bit immediate | | | | | |
| 0 0 1 1 | | . . . . . | code | dst | H | 16 bit immediate | | | | | |

*Description* The NOR of *src1* and *src2* is loaded into *dst*. The immediate can be either the high or low half-word.

*Status Bits* N - Unaffected

C - Unaffected

V - Unaffected

Z - 1 if zero result generated, 0 otherwise.

*M Bits* Unaffected

*Examples*

NOT NOT

*Syntax* NOT *src,dst*

*Operation* *(NOT src)* → *dst*

*Operands*

D,D With parallel transfers

any,any No parallel transfers

*Routing*

| A | B | C | D | E |
|---|---|---|---|---|
| 0 | src | 0 | - | - |

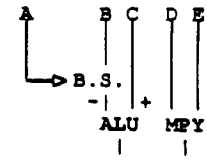


*Encoding*

| 31 | 27 | 22 | 19 | 16 | 11 | 8 | 5 | 2 | 0 |
|---|---|---|---|---|---|---|---|---|---|
| 0 0 0 0 | . . . . . | src | dst | Parallel transfers | | | | | |
| 0 0 0 0 | . . . . . | src | dst | 0 0 0 0 0 | scde | dcde | 0 0 0 | 0 0 0 | |

*Description* The 1s complement of *src* is loaded into *dst*.

*Status Bits* N - Unaffected.

C - Unaffected.

V - Unaffected.

Z - 1 if zero result generated, 0 otherwise.

*M Bits* Unaffected

*Examples*

Number of 1s NUM1

*Syntax* NUM1 *src,dst*

*Operation* *the number of 1s in src → dst*

*Operands*

D,D With parallel transfers

any,any No parallel transfers

*Routing*

| A | B | C | D | E |
|---|---|---|---|---|
| 0 | src | 0 | - | - |

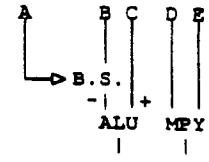


*Encoding*

| 31 | 27 | 22 | 19 | 16 | 11 | 8 | 5 | 2 | 0 |
|---|---|---|---|---|---|---|---|---|---|
| 0 0 0 0 | . . . . . | src | dst | Parallel transfers | | | | | |
| 0 0 0 0 | . . . . . | src | dst | 0 0 0 0 0 | scde | dcde | 0 0 0 | 0 0 0 | |

*Description* The number of 1s within *src* is counted and the result is loaded into *dst*.

*Status Bits* N - Unaffected.

C - Unaffected.

V - Unaffected.

Z - 1 if *src* contained all zeros, 0 otherwise.

*M Bits* Unaffected

*Examples*

**OR** OR

*Syntax* OR *src1,src2,dst*

*Operation* *src1 OR src2* → *dst*

*Operands*

| | |
|---|---|
| D,D,D | With parallel transfers |
| any,D,any | No parallel transfers |
| D,any,any | No parallel transfers |
| D,I,D | No parallel transfers |
| any,I,src1 | No parallel transfers |

*Routing*

| A | B | C | D | E |
|---|---|---|---|---|
| 0 | src2 | src1 | - | - |

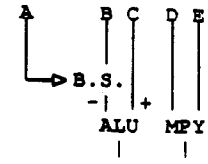


*Encoding*

| 31 | 30 | 27 | 22 | 19 | 16 | 15 | 11 | 8 | 5 | 2 | 0 |
|---|---|---|---|---|---|---|---|---|---|---|---|
| 1 | src2 | . . . . . | src1 | dst | Parallel transfers | | | | | | |
| 1 | src2 | . . . . . | src1 | dst | 0 0 0 0 0 | scde1 | dcde | scde2 | 0 0 0 | | |
| 0 1 1 1 | | . . . . . | src1 | dst | H | 16 bit immediate | | | | | |
| 0 0 1 1 | | . . . . . | code | dst | H | 16 bit immediate | | | | | |

*Description* The OR of *src1* and *src2* is loaded into *dst*. The immediate can be either the high or low half-word.

*Status Bits* N - Unaffected

C - Unaffected

V - Unaffected

Z - 1 if zero result generated, 0 otherwise.

*M Bits* Unaffected

*Examples*

OR with Complement ORN

*Syntax* ORN *src1,src2,dst*

*Operation* *src1 OR (NOT src2)* → *dst*

*Operands*

| | |
|---|---|
| D,D,D | With parallel transfers |
| any,D,any | No parallel transfers |
| D,any,any | No parallel transfers |
| D,I,D | No parallel transfers |
| any,I,src1 | No parallel transfers |

*Routing*

| A | B | C | D | E |
|---|---|---|---|---|
| 0 | src2 | src1 | - | - |

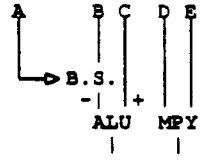


*Encoding*

| 31 | 30 | 27 | 22 | 19 | 16 | 15 | 11 | 8 | 5 | 2 | 0 |
|---|---|---|---|---|---|---|---|---|---|---|---|
| 1 | src2 | . . . . . | src1 | dst | Parallel transfers | | | | | | |
| 1 | src2 | . . . . . | src1 | dst | 0 0 0 0 0 | scde1 | dcde | scde2 | 0 0 0 | | |
| 0 1 1 1 | | . . . . . | src1 | dst | H | 16 bit immediate | | | | | |
| 0 0 1 1 | | . . . . . | code | dst | H | 16 bit immediate | | | | | |

*Description* The OR of *src1* with the 1s complement of *src2* is loaded into *dst*. The immediate can be either the high or low half-word.

*Status Bits* N - Unaffected

C - Unaffected

V - Unaffected

Z - 1 if zero result generated, 0 otherwise.

*M Bits* Unaffected

*Examples*

## Conditional POP

POPcond

*Syntax* POPcond *dst*

*Operation* **A7(1+m) conditionally → dst*

*Operands*

cond <Mn,Qn,Cn,Ln> No parallel Data Unit operation.

*Encoding*

| 31 27 | 23 | 22 | 21 18 | 16 | 15 11 | 10 | 8 5 | 2 0 |
|---|---|---|---|---|---|---|---|---|
| 0 1 1 0 cond. | 0 | N | 0 0 0 0 0 | 0 | 1 0 0 0 | 0 cde | 1 1 1 dst | 0 0 1 |

*Description* This instruction will conditionally POP from the stack into a Mn, Qn, Cn or Ln register. (Note that the assembler may support POPs to the other registers which can be supported with the normal LDcond instruction). The stack pointer A7 is post-incremented. Note that the Stack Pointer is unconditionally modified. Only the register load is conditional. In addition to the normal condition codes the condition "never" is also available. This allows the Stack Pointer to be incremented without actually popping into a register.

*Status Bits* N - Unaffected.

C - Unaffected.

V - Unaffected.

Z - Unaffected.

*M Bits* Unaffected

*Examples*

Push Return Address PRET

*Syntax* PRET

*Operation* {I RET {s.} *A7(-1m) conditionally)

*Operands*

none No parallel Data Unit operation.

*Encoding*

| 31 | 27 | 23 | 16 | 11 | 8 | 5 | 2 | 0 |
|---|---|---|---|---|---|---|---|---|
| 0 1 1 0 | uncond. | 0 0 0 0 0 0 0 | 0 0 0 1 0 | 0 0 1 | 1 1 1 | 0 1 1 | 0 0 1 | |

*Description* The value within the RET register is pushed onto the stack if the PC was loaded by either of the two previous instructions. This allows conditional calls to be supported. Theoretically this opcode format allows conditional conditional pushes of RET, but this won't be supported by the assembler.

*Status Bits* N - Unaffected.

C - Unaffected.

V - Unaffected.

Z - Unaffected.

*M Bits* Unaffected

*Examples*

## Conditional PUSH — PUSHcond

*Syntax* PUSHcond *src*

*Operation* *src conditionally → *A7(-1m)*

*Operands*

cond <Mn,Qn,Cn,Ln> No parallel Data Unit operation.

*Encoding*

| 31 | 27 | 23 | 22 | 21 | 18 | 16 | 15 | 11 | 10 | 8 | 5 | 2 | 0 |
|---|---|---|---|---|---|---|---|---|---|---|---|---|---|
| 0 1 1 0 | cond. | 0 | N | 0 0 0 | 0 0 | 0 | 1 0 0 0 | 1 | cde | 1 1 1 | dst | 0 0 1 | |

*Description* This instruction will conditionally PUSH from a Mn, Qn, Cn or Ln register to the stack. (Note that the assembler may support PUSHs of the other registers which can be supported with the normal STcond instruction). The stack pointer A7 is pre-decremented. Note however that the Stack Pointer is unconditionally modified. Only the register store is conditional. In addition to the normal condition codes the condition "never" is also available. This allows the Stack Pointer to be incremented without actually pushing anything onto the stack.

*Status Bits* N - Unaffected.

C - Unaffected.

V - Unaffected.

Z - Unaffected.

*M Bits* Unaffected

*Examples*

Right-most 1 RM1

*Syntax* RM1 *src,dst*

*Operation* *bit number of right-most 1 in src → dst*

*Operands*

D,D With parallel transfers

any,any No parallel transfers

*Routing*

| A | B | C | D | E |
|---|---|---|---|---|
| 0 | src | 0 | - | - |

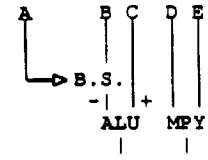


*Encoding*

| 31 30 | 27 | 22 | 19 | 16 | 11 | 8 | 5 | 2 | 0 |
|---|---|---|---|---|---|---|---|---|---|
| 0 0 0 0 | . . . . . | src | dst | Parallel transfers | | | | | |
| 0 0 0 0 | . . . . . | src | dst | 0 0 0 0 0 | scde | dcde | 0 0 0 | 0 0 0 | |

*Description* The bit number of the right-most 1 in *src* is loaded into *dst*.

*Status Bits* N - Unaffected.

C - Unaffected.

V - Unaffected.

Z - 1 if *src* contained all zeros, 0 otherwise.

*M Bits* Unaffected

*Examples*

Rotate ROT

*Syntax* ROT *src1,src2,dst*

*Operation* *src1 rotated left by amount in src2 → dst*

*Operands*

| | |
|---|---|
| D,D,D | With parallel transfers |
| any,D,any | No parallel transfers |
| D,any,any | No parallel transfers |
| D,I,D | No parallel transfers |
| any,I,src1 | No parallel transfers |

*Routing*

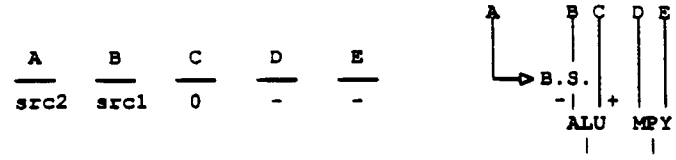


*Encoding*

| 31 | 30 | 27 | 22 | 19 | 16 | 15 | 11 | 8 | 5 | 2 | 0 |
|---|---|---|---|---|---|---|---|---|---|---|---|
| 1 | src2 | . . . . . | src1 | dst | Parallel transfers | | | | | | |
| 1 | src2 | . . . . . | src1 | dst | 0 0 0 0 0 | scde1 | dcde | scde2 | 0 0 0 | | |
| 0 1 1 1 | | . . . . . | src1 | dst | H | 16 bit immediate | | | | | |
| 0 0 1 1 | | . . . . . | code | dst | H | 16 bit immediate | | | | | |

*Description* *src1* is left-rotated by the amount in the least-significant 5 bits of *src2*. The result is loaded into *dst*. Only the least-significant 5 bits of the immediate are significant.

*Status Bits* N - Unaffected

C - Set to the last value rotated out. 0 if rotated by 0.

V - Unaffected

Z - 1 if zero result generated, 0 otherwise.

*M Bits* Unaffected

*Examples*

Shift and Add

SADD

*Syntax* SADD *src1,src2,dst*

*Operation* *src1* + (*src2 shifted by pre-defined amount*) → *dst*

*Operands*

| | |
|---|---|
| D,D,D | With parallel transfers |
| any,D,any | No parallel transfers |
| D,any,any | No parallel transfers |
| D,I,D | No parallel transfers |
| any,I,src1 | No parallel transfers |

*Routing*

| A | B | C | D | E |
|---|---|---|---|---|
| pre | src2 | src1 | - | - |

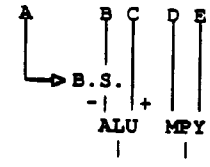


*Encoding*

| 31 | 30 | 27 | 22 | 19 | 16 | 15 | 11 | 8 | 5 | 2 | 0 |
|---|---|---|---|---|---|---|---|---|---|---|---|
| 1 | src2 | . . . . . | src1 | dst | Parallel transfers | | | | | | |
| 1 | src2 | . . . . . | src1 | dst | 0 0 0 0 0 | scda1 | dcda | scda2 | 0 0 0 | | |
| 0 1 1 1 | | . . . . . | src1 | dst | H | 16 bit immediate | | | | | |
| 0 0 1 1 | | . . . . . | code | dst | H | 16 bit immediate | | | | | |

*Description* *src2* is shifted by the pre-defined shift amount in the OPTIONS register. This is then added to *src1* and the result loaded into *dst*. The immediate is assumed to be unsigned, and before shifting, can be either the high or low half-word.

*Status Bits* N - 1 if negative result generated, 0 otherwise.

C - 1 if a carry occurs, 0 otherwise.

V - 1 if an overflow occurs, 0 otherwise.

Z - 1 if zero result generated, 0 otherwise.

*M Bits* Unaffected

*Examples*

Set Bit

SETB

*Syntax* SETB *src1,src2,dst*

*Operation* *src1[src2]:=1, src1' → dst*

*Operands*

| | |
|---|---|
| D,D,D | With parallel transfers |
| any,D,any | No parallel transfers |
| D,any,any | No parallel transfers |
| D,I,D | No parallel transfers |
| any,I,src1 | No parallel transfers |

*Routing*

| A | B | C | D | E |
|---|---|---|---|---|
| src2 | 1 | src1 | - | - |

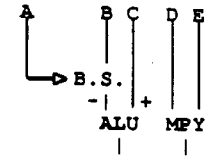


*Encoding*

| 31 | 30 | 27 | 22 | 19 | 16 | 15 | 11 | 8 | 5 | 2 | 0 |
|---|---|---|---|---|---|---|---|---|---|---|---|
| 1 | src2 | . . . . . | src1 | dst | Parallel transfers | | | | | | |
| 1 | src2 | . . . . . | src1 | dst | 0 0 0 0 0 | scdel | dcde | scde2 | 0 0 0 | | |
| 0 1 1 1 | | . . . . . | src1 | dst | H | 16 bit immediate | | | | | |
| 0 0 1 1 | | . . . . . | code | dst | H | 16 bit immediate | | | | | |

*Description* The bit within *src1* pointed to by the least-significant 5-bits of *src2* is set to one. The result is loaded into *dst*. Only the least-significant 5 bits of the immediate are significant.

*Status Bits* N - Unaffected

C - Unaffected

V - Unaffected

Z - Set to 0?

*M Bits* Unaffected

*Examples*

Shift Left (Logical) SL

*Syntax* SL *src1,src2,dst*

*Operation* *src1 shifted left by src2. 0 fill → dst*

*Operands*

| | |
|---|---|
| D,D,D | With parallel transfers |
| any,D,any | No parallel transfers |
| D,any,any | No parallel transfers |
| D,I,D | No parallel transfers |
| any,I,src1 | No parallel transfers |

*Routing*

| A | B | C | D | E |
|---|---|---|---|---|
| src2 | src1 | 0 | - | - |

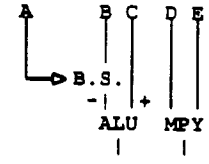


*Encoding*

| 31 | 30 | 27 | 22 | 19 | 16 | 15 | 11 | 8 | 5 | 2 | 0 |
|---|---|---|---|---|---|---|---|---|---|---|---|
| 1 | src2 | . . . . . | src1 | dst | Parallel transfers | | | | | | |
| 1 | src2 | . . . . . | src1 | dst | 0 0 0 0 0 | scde1 | dcde | scde2 | 0 0 0 | | |
| 0 1 1 1 | | . . . . . | src1 | dst | H | 16 bit immediate | | | | | |
| 0 0 1 1 | | . . . . . | code | dst | H | 16 bit immediate | | | | | |

*Description* *src1* is shifted left by the amount indicated in the least-significant 5 bits of *src2*. The least-significant bits are zero filled. The result is loaded into *dst*. Only the least-significant 5 bits of the immediate are significant.

*Status Bits* N - Unaffected

C - Set to the last value shifted out. 0 if shift amount was 0.

V - Unaffected

Z - 1 if zero result generated, 0 otherwise.

*M Bits* Unaffected

*Examples*

Shift Right Arithmetic SRA

*Syntax* SRA *src1,src2,dst*

*Operation* *src1 shifted right by src2, sign extended → dst*

*Operands*

| | |
|---|---|
| D,D,D | With parallel transfers |
| any,D,any | No parallel transfers |
| D,any,any | No parallel transfers |
| D,I,D | No parallel transfers |
| any,I,src1 | No parallel transfers |

*Routing*

| A | B | C | D | E |
|---|---|---|---|---|
| src2 | src1 | 0 | - | - |

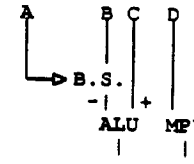


*Encoding*

| 31 30 | 27 | 22 | 19 | 16 15 | 11 | 8 | 5 | 2 | 0 |
|---|---|---|---|---|---|---|---|---|---|
| 1 | src2 | . . . . . | src1 | dst | Parallel transfers | | | | |
| 1 | src2 | . . . . . | src1 | dst | 0 0 0 0 0 | scde1 | dcde | scde2 | 0 0 0 |
| 0 1 1 1 | . . . . . | src1 | dst | H | 16 bit immediate | | | | |
| 0 0 1 1 | . . . . . | code | dst | H | 16 bit immediate | | | | |

*Description* *src1* is shifted right by the amount indicated in the least-significant 5 bits of *src2*. The sign-bit is copied into the most-significant bits. The result is loaded into *dst*. Only the least-significant 5 bits of the immediate are significant.

*Status Bits* N - 1 if negative result generated, 0 otherwise.

C - Set to the last value shifted out. 0 if shift amount was 0.

V - Unaffected

Z - 1 if zero result generated, 0 otherwise.

*M Bits* Unaffected

*Examples*

Shift Right Logical SRL

*Syntax* SRL *src1,src2,dst*

*Operation* *src1 shifted right by src2, 0 fill → dst*

*Operands*

| | |
|---|---|
| D,D,D | With parallel transfers |
| any,D,any | No parallel transfers |
| D,any,any | No parallel transfers |
| D,I,D | No parallel transfers |
| any,I,src1 | No parallel transfers |

*Routing*

| A | B | C | D | E |
|---|---|---|---|---|
| src2 | src1 | 0 | - | - |

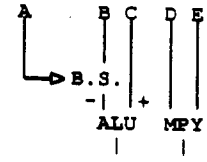


*Encoding*

| 31 30 | 27 | 22 | 19 | 16 15 | 11 | 8 | 5 | 2 | 0 |
|---|---|---|---|---|---|---|---|---|---|
| 1 | src2 | . . . . . | src1 | dst | Parallel transfers | | | | |
| 1 | src2 | . . . . . | src1 | dst | 0 0 0 0 0 | scde1 | dcde | scde2 | 0 0 0 |
| 0 1 1 1 | . . . . . | | src1 | dst | H | 16 bit immediate | | | |
| 0 0 1 1 | . . . . . | | code | dst | H | 16 bit immediate | | | |

*Description* *src1* is shifted right by the amount indicated in the least-significant 5 bits of *src2*. The most-significant bits are zero filled. The result is loaded into *dst*. Only the least-significant 5 bits of the immediate are significant.

*Status Bits* N - Unaffected

C - Set to the last value shifted out. 0 if shift amount was 0.

V - Unaffected

Z - 1 if zero result generated, 0 otherwise.

*M Bits* Unaffected

*Examples*

Shift and Subtract

SSUB

*Syntax* SSUB *src1,src2,dst*

*Operation* *src1 - (src2 shifted by pre-defined amount) → dst*

*Operands*

| | |
|---|---|
| D,D,D | With parallel transfers |
| any,D,any | No parallel transfers |
| D,any,any | No parallel transfers |
| D,I,D | No parallel transfers |
| any,I,src1 | No parallel transfers |

*Routing*

| A | B | C | D | E |
|---|---|---|---|---|
| pre | src2 | src1 | - | - |

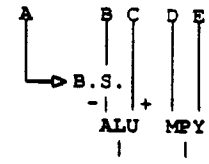


*Encoding*

| 31 | 30 | 27 | 22 | 19 | 16 | 15 | 11 | 8 | 5 | 2 | 0 |
|---|---|---|---|---|---|---|---|---|---|---|---|
| 1 | src2 | . . . . . | src1 | dst | Parallel transfers | | | | | | |
| 1 | src2 | . . . . . | src1 | dst | 0 0 0 0 0 | scde1 | dcde | scde2 | 0 0 0 | | |
| 0 1 1 1 | | . . . . . | src1 | dst | H | 16 bit immediate | | | | | |
| 0 0 1 1 | | . . . . . | code | dst | H | 16 bit immediate | | | | | |

*Description* *src2* is shifted by the pre-defined shift amount in the OPTIONS register. This is then subtracted from *src1* and the result loaded into *dst*. The immediate is assumed to be unsigned, and before shifting, can be either the high or low half-word.

*Status Bits* N - 1 if negative result generated, 0 otherwise.

C - 1 if a carry occurs, 0 otherwise.

V - 1 if an overflow occurs, 0 otherwise.

Z - 1 if zero result generated, 0 otherwise.

*M Bits* Unaffected

*Examples*

Conditional Store

STcond

*Syntax* STcond *dst,*An(mode)*

*Operation* *src conditionally → *dst*

*Operands*

cond A0-A7(mode{g },<Dn,An,Xn,Pn> ) No parallel Data Unit operation.

Addressing modes pre- or post-indexing

+/- 3 bit immediate or +/- an indeX register

modify Address register, or leave unaltered

*Encoding*

| 31 | 27 | 23 | 22 | 21 | 18 | 16 | 15 | 11 | 10 | 8 | 5 | 2 | 0 |
|---|---|---|---|---|---|---|---|---|---|---|---|---|---|
| 0 1 1 0 | cond. | 0 | N | 0 0 0 | 0 0 | 0 | mod | 1 | cde | A | dst | Imm/X | |

*Description* This instruction will conditionally store a Dn, An, Xn or Pn register to an indirect address generated from any Address register. (Mn, Qn, Cn or Ln cannot be directly stored to memory except with a PUSH instruction). If specifying an immediate then +/- 0 to 7 are available. If specifying an index register then it must be in the same Address sub-unit as the Address register. If the address is non-aligned, then this will store only the lower byte(s). Note that if a register modify is specified then this will happen unconditionally. Only the actual store is conditional. In addition to the normal condition codes the condition "never" is also available. This allows Address register modify but without storing a register.

*Status Bits* N - Unaffected.

C - Unaffected.

V - Unaffected.

Z - Unaffected.

*M Bits* Unaffected

*Examples*

Conditional Store & Load

STcond || LD

*Syntax* STcond *src1,*Am(mode)* || LD **An(mode),dst2*

*Operation* {I src1 conditionally {s.} *dst1, *src2 conditionally → dst2}

*Operands*

cond Dm,A0-A3(mode{g } A4-A7(mode),Dn ) No parallel Data Unit operation.

Addressing modes

post-increment by 1 with Address register modify

pre-decrement by 1 with Address register modify

post-increment by A reg's associated indeX register with Address register modify

indirect without indexing

*Encoding*

| 31 | 27 | 23 | 22 | 21 | 18 | 16 | 15 | 11 | 10 | 8 | 5 | 2 | 0 |
|---|---|---|---|---|---|---|---|---|---|---|---|---|---|
| 0 1 1 0 | cond. | 0 | N | 0 0 0 | 0 0 | 1 | mdg | mdl | 1 | A47 | 0 | A03 | Dg | D1 |

*Description* This instruction will conditionally store *src1* via the Global bus to an indirect address generated from an Address register in the Global sub-unit (A0-A3). In parallel with this it will conditionally (same condition) load *dst2* via the Local bus from an indirect address generated from an Address register in the Local sub-unit (A4-A7). Indirect, post-increment by 1, pre-decrement by 1 and post-increment by X addressing modes are supported independantly on the two buses. The indeX register(s) used have the same subscript(s) as the Address register(s). *src1* and *dst2* must be D registers. Note that if register modifies are specified then these will happen unconditionally. Only the actual store and load are conditional. In addition to the normal condition codes the condition "never" is also available. This allows Address register modifies but without loading or storing anything.

*Status Bits* N - Unaffected.

C - Unaffected.

V - Unaffected.

Z - Unaffected.

*M Bits* Unaffected

*Examples*

Conditional Store & Store

STcond||ST

*Syntax* STcond *src1,*Am(mode)* || ST *src2,*An(mode)*

*Operation* {I src1 conditionally {s.} *dst1, src2 conditionally {s.} *dst2}

*Operands*

cond Dm,A0-A3(mode{g } Dn,A4-A7(mode) ) No parallel Data Unit operation.

Addressing modes

post-increment by 1 with Address register modify

pre-decrement by 1 with Address register modify

post-increment by A reg's associated indeX register with Address register modify

indirect without indexing

*Encoding*

| 31 | 27 | 23 | 22 | 21 | 18 | 16 | 15 | | 11 | 10 | 8 | 5 | 2 | 0 |
|---|---|---|---|---|---|---|---|---|---|---|---|---|---|---|
| 0 1 1 0 | cond. | 0 | N | 0 0 0 | 0 0 | 1 | mdg | mdl | 1 | A47 | 1 | A03 | Dg | D1 |

*Description* This instruction will conditionally store *src1* via the Global bus to an indirect address generated from an Address register in the Global sub-unit (A0-A3). In parallel with this it will store *src2* via the Local bus to an indirect address generated from an Address register in the Local sub-unit (A4-A7). Indirect, post-increment by 1, pre-decrement by 1 and post-increment by X addressing modes are supported independantly on the two buses. The indeX register(s) used have the same subscript(s) as the Address register(s). *src1* and *src2* must be D registers. Note that if register modifies are specified then these will happen unconditionally. Only the actual stores are conditional. In addition to the normal condition codes the condition "never" is also available. This allows Address register modifies but without storing anything.

*Status Bits* N - Unaffected.

C - Unaffected.

V - Unaffected.

Z - Unaffected.

*M Bits* Unaffected

*Examples*

## Store Upper Conditionally

STUcond

*Syntax* STUcond *src,*An(mode)*

*Operation* *src → *dst*

*Operands*

<Dn,An,Xn,Pn>,A0-A7(mode{g } ) No parallel Data Unit operation.

Addressing modes pre- or post-indexing

+/- 3 bit immediate or +/- an indeX register

modify Address register, or leave unaltered

*Encoding*

| 31 | 27 | 23 | 22 | 21 | 18 | 16 | 15 | 11 | 10 | 8 | 5 | 2 | 0 |
|---|---|---|---|---|---|---|---|---|---|---|---|---|---|
| 0 1 1 0 | cond. | 0 | N | 0 0 0 | 1 0 | 0 | mod | 1 | cde | A | dst | Imm/X | |

*Description* For use with non-aligned addresses. Conditionally stores the upper portion of a PP register to an indirect non-aligned address generated from any Address register. The source register must be one of Dn, An, Xn or Pn. (Non-aligned stores are not supported for any other PP registers). Note that if register modify is specified then this will happen unconditionally. Only the actual store is conditional. In addition to the normal condition codes the condition "never" is also available. This allows Address register modify but without loading a register. If specifying an immediate then +/- 0 to 7 are available. If specifying an index register then it must be in the same Address sub-unit as the Address register.

*Status Bits* N - Unaffected.

C - Unaffected.

V - Unaffected.

Z - Unaffected.

*M Bits* Unaffected

*Examples*

Subtract

SUB

*Syntax* SUB *src1,src2,dst*

*Operation* *src1* - *src2* → *dst*

*Operands*

| | |
|---|---|
| D,D,D | With parallel transfers |
| any,D,any | No parallel transfers |
| D,any,any | No parallel transfers |
| D,I,D | No parallel transfers |
| any,I,src1 | No parallel transfers |

*Routing*

| A | B | C | D | E |
|---|---|---|---|---|
| 0 | src2 | src1 | - | - |

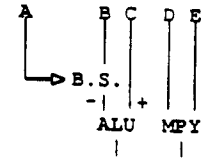


*Encoding*

| 31 | 30 | 27 | 22 | 19 | 16 | 15 | 11 | 8 | 5 | 2 | 0 |
|---|---|---|---|---|---|---|---|---|---|---|---|
| 1 | src2 | . . . . . | src1 | dst | Parallel transfers | | | | | | |
| 1 | src2 | . . . . . | src1 | dst | 0 0 0 0 0 | scde1 | dcde | scde2 | 0 0 0 | | |
| 0 1 1 1 | | . . . . . | src1 | dst | H | 16 bit immediate | | | | | |
| 0 0 1 1 | | . . . . . | code | dst | H | 16 bit immediate | | | | | |

*Description* *src2* is subtracted from *src1* and the result is loaded into *dst*. The immediate is assumed to be unsigned, and can be either the high or low half-word.

*Status Bits* N - 1 if negative result generated, 0 otherwise.

C - 1 if a carry occurs, 0 otherwise.

V - 1 if an overflow occurs, 0 otherwise.

Z - 1 if zero result generated, 0 otherwise.

*M Bits* Unaffected

*Examples*

## Subtract with Borrow

SUBB

*Syntax* SUBB *src1,src2,dst*

*Operation* *src1* - *src2* - *C* → *dst*

*Operands*

| | |
|---|---|
| D,D,D | With parallel transfers |
| any,D,any | No parallel transfers |
| D,any,any | No parallel transfers |
| D,I,D | No parallel transfers |
| any,I,src1 | No parallel transfers |

*Routing*

| A | B | C | D | E |
|---|---|---|---|---|
| 0 | src2 | src1 | - | - |

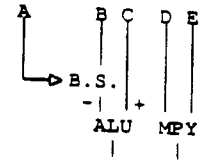


*Encoding*

| 31 | 30 | 27 | 22 | 19 | 16 | 15 | 11 | 8 | 5 | 2 | 0 |
|---|---|---|---|---|---|---|---|---|---|---|---|
| 1 | src2 | . . . . . | src1 | dst | Parallel transfers | | | | | | |
| 1 | src2 | . . . . . | src1 | dst | 0 0 0 0 0 | scde1 | dcde | scde2 | 0 0 0 | | |
| 0 1 1 1 | | . . . . . | src1 | dst | H | 16 bit immediate | | | | | |
| 0 0 1 1 | | . . . . . | code | dst | H | 16 bit immediate | | | | | |

*Description* ( *src2* + the Carry bit) is subtracted from *src1* and the result is loaded into *dst*. The immediate is assumed to be unsigned, and can be either the high or low half-word.

*Status Bits* N - 1 if negative result generated, 0 otherwise.

C - 1 if a borrow occurs, 0 otherwise.

V - 1 if an overflow occurs, 0 otherwise.

Z - 1 if zero result generated, 0 otherwise.

*M Bits* Unaffected

*Examples*

Subtract Multiple bytes Half-words

SUBM

*Syntax* SUBM *src1,src2,dst*

*Operation* *src1* ----/--/- *src2* → *dst*

*Operands*

| | |
|---|---|
| D,D,D | With parallel transfers |
| any,D,any | No parallel transfers |
| D,any,any | No parallel transfers |
| D,I,D | No parallel transfers |
| any,I,src1 | No parallel transfers |

*Routing*

| A | B | C | D | E |
|---|---|---|---|---|
| 0 | src2 | src1 | - | - |

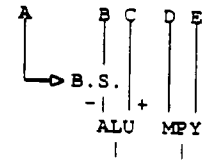


*Encoding*

| 31 | 30 | 27 | 22 | 19 | 16 | 15 | 11 | 8 | 5 | 2 | 0 |
|---|---|---|---|---|---|---|---|---|---|---|---|
| 1 | src2 | . . . . . | src1 | dst | Parallel transfers | | | | | | |
| 1 | src2 | . . . . . | src1 | dst | 0 0 0 0 0 | scde1 | dcde | scde2 | 0 0 0 | | |
| 0 1 1 1 | | . . . . . | src1 | dst | H | 16 bit immediate | | | | | |
| 0 0 1 1 | | . . . . . | code | dst | H | 16 bit immediate | | | | | |

*Description* The ALU bits in the OPTIONS register are used to split the ALU into four seperate bytes, two seperate half-words, or one word. Each portion of *src2* is subtracted from the corresponding portion of *src1*, and the result(s) stored in *dst*. The individual borrows are stored into the 4, 2 or 1 least-significant M bits respectively. The immediate is assumed to be unsigned, and can be either the high or low half-word.

*Status Bits* **N - Unaffected**

**C - Unaffected**

**V - Unaffected**

**Z - 1 if zero result generated, 0 otherwise.**

*M Bits* The borrows from the individual subtractions are stored in the least-significant 4, 2 or 1 M bits, according to the ALU option bit values.

*Examples*

Test Bit

TSTB

*Syntax* TSTB *src1,src2,dst*

*Operation* *src1[src2] is tested for 1*

*Operands*

| | |
|---|---|
| D,D,D | With parallel transfers |
| any,D,any | No parallel transfers |
| D,any,any | No parallel transfers |
| D,I,D | No parallel transfers |
| any,I,src1 | No parallel transfers |

*Routing*

| A | B | C | D | E |
|---|---|---|---|---|
| src2 | 1 | src1 | - | - |

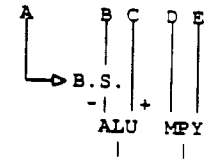


*Encoding*

| 31 | 30 | 27 | 22 | 19 | 16 | 15 | 11 | 8 | 5 | 2 | 0 |
|---|---|---|---|---|---|---|---|---|---|---|---|
| 1 | src2 | . . . . . | src1 | 0 0 0 | Parallel transfers | | | | | | |
| 1 | src2 | . . . . . | src1 | 0 0 0 | 0 0 0 0 0 | scdel | 0 0 0 | scde2 | 0 0 0 | | |
| 0 1 1 1 | | . . . . . | src1 | 0 0 0 | H | 16 bit immediate | | | | | |
| 0 0 1 1 | | . . . . . | code | src1 | H | 16 bit immediate | | | | | |

*Description* The bit within *src1* pointed to by the least-significant 5-bits of *src2* is tested for one. The Z status bit is set to 1 if the bit was zero, 0 otherwise. Only the least-significant 5 bits of the immediate are significant.

*Status Bits* N - Unaffected

C - Unaffected

V - Unaffected

Z - 1 if bit was zero, 0 otherwise

*M Bits* Unaffected

*Examples*

Unlock MIMD PPs ULCK

*Syntax* ULCK

*Operation* *unlock MIMD PPs from each other*

*Operands*

None With parallel transfers

*Routing*

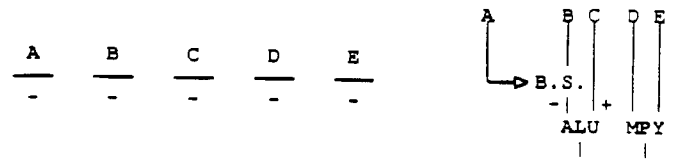


*Encoding*

| 31 | 27 | 22 | 19 | 16 | 0 |
|---|---|---|---|---|---|
| 0 0 0 0 | . . . . . | 0 0 0 | 0 0 0 | Parallel transfers | |

*Description* Instruction unlocks the MIMD PPs from each other. They then resume independant instruction execution on the next instruction fetch.

*Status Bits* N - Unaffected.

C - Unaffected.

V - Unaffected.

Z - Unaffected.

*M Bits* Unaffected

*Examples*

Exclusive NOR XNOR

*Syntax* XNOR *src1,src2,dst*

*Operation* *src1 XNOR src2* → *dst*

*Operands*

| | |
|---|---|
| D,D,D | With parallel transfers |
| any,D,any | No parallel transfers |
| D,any,any | No parallel transfers |
| D,I,D | No parallel transfers |
| any,I,src1 | No parallel transfers |

*Routing*

| A | B | C | D | E |
|---|---|---|---|---|
| 0 | src2 | src1 | - | - |

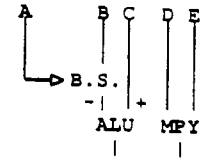


*Encoding*

| 31 | 30 | 27 | 22 | 19 | 16 | 15 | 11 | 8 | 5 | 2 | 0 |
|---|---|---|---|---|---|---|---|---|---|---|---|
| 1 | src2 | . . . . . | src1 | dst | Parallel transfers | | | | | | |
| 1 | src2 | . . . . . | src1 | dst | 0 0 0 0 0 | scde1 | dcde | scde2 | 0 0 0 | | |
| 0 1 1 1 | | . . . . . | src1 | dst | H | 16 bit immediate | | | | | |
| 0 0 1 1 | | . . . . . | code | dst | H | 16 bit immediate | | | | | |

*Description* The exclusive NOR of *src1* and *src2* is loaded into *dst*. The immediate can be either the high or low half-word.

*Status Bits* N - Unaffected

C - Unaffected

V - Unaffected

Z - 1 if zero result generated, 0 otherwise.

*M Bits* Unaffected

*Examples*

Exclusive OR XOR

*Syntax* XOR *src1,src2,dst*

*Operation* *src1 XOR src2* → *dst*

*Operands*

| | |
|---|---|
| D,D,D | With parallel transfers |
| any,D,any | No parallel transfers |
| D,any,any | No parallel transfers |
| D,I,D | No parallel transfers |
| any,I,src1 | No parallel transfers |

*Routing*

| A | B | C | D | E |
|---|---|---|---|---|
| 0 | src2 | src1 | - | - |

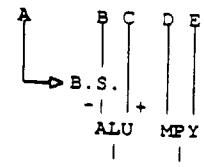


*Encoding*

| 31 | 30 | 27 | 22 | 19 | 16 | 15 | 11 | 8 | 5 | 2 | 0 |
|---|---|---|---|---|---|---|---|---|---|---|---|
| 1 | src2 | . . . . . | src1 | dst | Parallel transfers | | | | | | |
| 1 | src2 | . . . . . | src1 | dst | 0 0 0 0 0 | scde1 | dcde | scde2 | 0 0 0 | | |
| 0 1 1 1 | | . . . . . | src1 | dst | H | 16 bit immediate | | | | | |
| 0 0 1 1 | | . . . . . | code | dst | H | 16 bit immediate | | | | | |

*Description* The exclusive OR of *src1* and *src2* is loaded into *dst*. The immediate can be either the high or low half-word.

*Status Bits* N - Unaffected

C - Unaffected

V - Unaffected

Z - 1 if zero result generated, 0 otherwise.

*M Bits* Unaffected

*Examples*

Parallel Load ||LD

*Syntax* || LD **An(mode),dst*

*Operation* **src → dst*

*Operands*

A0-A7(mode{g }.<Dn.An.Xn.Pn> ) With parallel Data Unit operation

Addressing modes pre- or post-indexing

+/- 3 bit immediate or +/- an indeX register

modify Address register, or leave unaltered

*Encoding*

| 31 27 | 232221 18 | 1615 | 1110 | 8 5 | 2 0 |
|---|---|---|---|---|---|
| Data Unit operation | 0 | mod | 0 cde | A | dst | Imm/X |

*Description* In parallel with a (D register) Data Unit operation will load a Dn, An, Xn or Pn register from an indirect address generated from any Address register. (Mn, Qn, Cn or Ln cannot be directly loaded from memory except with a ||POP instruction). If specifying an immediate then +/- 0 to 7 are available. If specifying an index register then it must be in the same Address sub-unit as the Address register. If the address is non-aligned, then this will load only the lower byte(s).

*Status Bits* N - Unaffected.

C - Unaffected.

V - Unaffected.

Z - Unaffected.

*M Bits* Unaffected

*Examples*

Parallel Load & Load

||LD ||LD

*Syntax* || LD *Am(mode),dst1 || LD *An(mode),dst2

*Operation* *src1 → dst1 || *src2 → dst2

*Operands*

A0-A3(mode{g }.Dm A4-A7(mode),Dn ) With parallel Data Unit operation. or

Addressing modes post-increment by 1 with Address register modify

pre-decrement by 1 with Address register modify

post-increment by A reg's associated indeX register with Address register modify

indirect without indexing

*Encoding*

| 31 27 | 232221 | 18 | 1615 | | 1110 | | 8 7 | | 5 | 2 0 |
|---|---|---|---|---|---|---|---|---|---|---|
| Data Unit operation | | 1 | mdg | mdl | 0 | A47 | 0 | A03 | Dg | Dl |

*Description* In parallel with a (D register) Data Unit operation, will load *dst1* via the Global bus from an indirect address generated from an Address register in the Global sub-unit (A0-A3). In parallel with this it will load *dst2* via the Local bus from an indirect address generated from an Address register in the Local sub-unit (A4-A7). Indirect, post-increment by 1, pre-decrement by 1 and post-increment by X addressing modes are supported independantly on the two buses. The indeX register(s) used have the same subscript(s) as the Address register(s). The *dsts* must be D registers.

*Status Bits* N - Unaffected.

C - Unaffected.

V - Unaffected.

Z - Unaffected.

*M Bits* Unaffected

*Examples*

Parallel Load & Store, ||LD ||ST

*Syntax* || LD **Am(mode),dst1* || ST *src2,*An(mode)*

*Operation* **src1* → *dst1* || *src2* → **dst2*

*Operands*

A0-A3(mode{g ),Dm Dn,A4-A7(mode) ) With parallel Data Unit operation.
or

Addressing modes post-increment by 1 with Address register modify

pre-decrement by 1 with Address register modify

post-increment by A reg's associated indeX register with Address register modify

indirect without indexing

*Encoding*

| 31 27 | 232221 18 | 1615 | | 1110 | | 7 | 5 | 2 0 |
|---|---|---|---|---|---|---|---|---|
| Data Unit operation | 1 | mdg | md1 | 0 | A47 | 1 | A03 | Dg | D1 |

*Description* In parallel with a (D register) Data Unit operation, will load *dst1* via the Global bus from an indirect address generated from an Address register in the Global sub-unit (A0-A3). In parallel with this it will store *src2* via the Local bus to an indirect address generated from an Address register in the Local sub-unit (A4-A7). Indirect, post-increment by 1, pre-decrement by 1 and post-increment by X addressing modes are supported independantly on the two buses. The indeX register(s) used have the same subscript(s) as the Address register(s). *dst1* and *src2* must be D registers.

*Status Bits* N - Unaffected.

C - Unaffected.

V - Unaffected.

Z - Unaffected.

*M Bits* Unaffected

*Examples*

Parallel MOVE

||MOV

*Syntax* || MOV *src,dst*

*Operation* *src* → *dst*

*Operands*

any,any With parallel Data Unit operation

*Encoding*

| 31 27 | 232221 16 | 11 | 8 | 5 | 2 0 |
|---|---|---|---|---|---|
| Data Unit Operation | 0 1 0 1 0 | scde | dcde | src | dst |

*Description* In parallel with a (D register) Data Unit operation, will move any register *src* to any other register *dst*.

*Status Bits* N - Unaffected.

C - Unaffected.

V - Unaffected.

Z - Unaffected.

*M Bits* Unaffected

*Examples*

Parallel POP

||POP

*Syntax* || POP *dst*

*Operation* *A7(1+m) → *dst*

*Operands*

<Mn,Qn,Cn,Ln> With parallel Data Unit operation

*Encoding*

| 31 27 | 23 22 21 18 | 16 15 | 14 13 12 11 | 10 | 9 8 7 | 6 5 4 | 3 2 1 0 |
|---|---|---|---|---|---|---|---|
| Data Unit operation | | 0 | 1 0 0 0 | 0 | cde | 1 1 1 | dst | 0 0 1 |

*Description* In parallel with a (D register) Data Unit operation, will POP from the stack into a Mn, Qn, Cn or Ln register. (Note that the assembler may support ||POPs to the other registers which can be supported with the normal ||LD instruction). The stack pointer A7 is post-incremented.

*Status Bits* N - Unaffected.

C - Unaffected.

V - Unaffected.

Z - Unaffected.

*M Bits* Unaffected

*Examples*

Parallel Push of Return Address ||PRET

*Syntax* ||PRET

*Operanon* {I RET (s.) *A7(-1m) conditionally)

*Operands*

none With parallel Data Unit operation.

*Encoding*

| 31 | 16 | 11 | 8 | 5 | 2 | 0 |
|---|---|---|---|---|---|---|
| Data Unit Operation | 0 0 0 1 0 | 0 0 1 | 1 1 1 | 0 1 1 | 0 0 1 | |

*Description* In parallel with a (D register) Data Unit operation, the value within the RET register is pushed onto the stack if the PC was loaded by either of the two previous instructions. This allows conditional calls to be supported.

*Status Bits* N - Unaffected.

C - Unaffected.

V - Unaffected.

Z - Unaffected.

*M Bits* Unaffected

*Examples*

Parallel Push

||PUSH

*Syntax* ||PUSH *src*

*Operation* *src* → **A7(-1m)*

*Operands*

<Mn,Qn,Cn,Ln> With parallel Data Unit operation

*Encoding*

| 31 27 | 232221 18 | 1615 | 1110 | 8 5 | 2 0 |
|---|---|---|---|---|---|
| Data Unit operation | | 0 | 1 0 0 0 1 cde | 1 1 1 dst | 0 0 1 |

*Description* In parallel with a (D register) Data Unit operation, will PUSH from a Mn, Qn, Cn or Ln register to the stack. (Note that the assembler may support ||PUSHs of the other registers which can be supported with the normal ||ST instruction). The stack pointer A7 is pre-decremented.

*Status Bits* N - Unaffected.

C - Unaffected.

V - Unaffected.

Z - Unaffected.

*M Bits* Unaffected

*Examples*

Parallel store

|| ST

*Syntax* || ST *src,*An(mode)*

*Operation* *src* → **dst*

*Operands*

A0-A7(mode{g }),<Dn,An,Xn,Pn> ) With parallel Data Unit operation

Addressing modes pre- or post-indexing

+/- 3 bit immediate or +/- an indeX register

modify Address register, or leave unaltered

*Encoding*

| 31 27 | 232221 18 | 1615 | 1110 | 8 5 | 2 0 |
|---|---|---|---|---|---|
| Data Unit operation | 0 | mod | 1 cde | A | dst | Imm/X |

*Description* In parallel with a (D register) Data Unit operation will store a Dn, An, Xn or Pn register to an indirect address generated from any Address register. (Mn, Qn, Cn or Ln cannot be directly stored to memory except with a ||PUSH instruction). If specifying an immediate then +/- 0 to 7 are available. If specifying an index register then it must be in the same Address sub-unit as the Address register. If the address is non-aligned, then this will store only the lower byte(s).

*Status Bits* N - Unaffected.

C - Unaffected.

V - Unaffected.

Z - Unaffected.

*M Bits* Unaffected

*Examples*

Parallel Store & Load

|| ST || LD

*Syntax* || ST *src1,*Am(mode)* || LD **An(mode),dst2*

*Operation* *src1* → **dst1* || **src2* → *dst2*

*Operands*

Dm,A0-A3(mode{g } A4-A7(mode),Dn ) With parallel Data Unit operation, or

Addressing modes post-increment by 1 with Address register modify

pre-decrement by 1 with Address register modify

post-increment by A reg's associated indeX register with Address register modify

indirect without indexing

*Encoding*

| 31 27 | 232221 | 18 | 1615 | | 1110 | | 8 | | 5 | 2 0 |
|---|---|---|---|---|---|---|---|---|---|---|
| Data Unit operation | | 1 | mdg | mdl | 1 | A47 | 0 | A03 | Dg | D1 |

*Description* In parallel with a (D register) Data Unit operation, will store *src1* via the Global bus to an indirect address generated from an Address register in the Global sub-unit (A0-A3). In parallel with this it will load *dst2* via the Local bus from an indirect address generated from an Address register in the Local sub-unit (A4-A7). Indirect, post-increment by 1, pre-decrement by 1 and post-increment by X addressing modes are supported independantly on the two buses. The indeX register(s) used have the same subscript(s) as the Address register(s). *src1* and *dst2* must be D registers.

*Status Bits* N - Unaffected.

C - Unaffected.

V - Unaffected.

Z - Unaffected.

*M Bits* Unaffected

*Examples*

Parallel Store & Store || ST || ST

*Syntax* || ST *src1,*Am(mode)* || ST *src2,*An(mode)*

*Operation* *src1* → **dst1* || *src2* → **dst2*

*Operands*

Dm,A0-A3(mode{g } Dn,A4-A7(mode) ) With parallel Data Unit operation, or

Addressing modes post-increment by 1 with Address register modify

pre-decrement by 1 with Address register modify

post-increment by A reg's associated indeX register with Address register modify

indirect without indexing

*Encoding*

| 31 27 | 232221 | 18 | 1615 | | 1110 | 8 | 5 | 2 0 |
|---|---|---|---|---|---|---|---|---|
| Data Unit operation | | 1 | mdg | mdl | 1 | A47 | 0 | A03 | Dg | D1 |

*Description* In parallel with a (D register) Data Unit operation, will store *src1* via the Global bus to an indirect address generated from an Address register in the Global sub-unit (A0-A3). In parallel with this it will store *src2* via the Local bus to an indirect address generated from an Address register in the Local sub-unit (A4-A7). Indirect, post-increment by 1, pre-decrement by 1 and post-increment by X addressing modes are supported independantly on the two buses. The indeX register(s) used have the same subscript(s) as the Address register(s). *src1* and *src2* must be D registers.

*Status Bits* N - Unaffected.

C - Unaffected.

V - Unaffected.

Z - Unaffected.

*M Bits* Unaffected

*Examples*

What is claimed is:

1. A synchronization system comprising:

a synchronization bus having a plurality of bus lines;

a plurality of processors, equal in number to the number of bus lines in said synchronization bus, each processor fetching and executing instructions independently of other processors, each processor including

a program counter register storing an address of a next instruction for fetching said next instruction,

a synchronization register having a plurality of bits equal in number to the number of processors, each bit corresponding to a unique one of said plurality of processors, said synchronization register having stored therein an indication of which if any other of said processors are to be synchronized with said processor,

an okay to synchronize circuit connected to a corresponding line of said synchronization bus for generating an okay to synchronize signal on said corresponding line of said synchronization bus when said processor is ready to fetch a next instruction, said okay to synchronize circuit inhibiting generation of said okay to synchronize signal during an interval from the storing of a changed address in said program counter other than a next sequential address until execution of an instruction at said changed address,

a synchronization logic unit connected to said synchronization bus, said program counter register and said synchronization register for inhibiting the fetching of said next instruction by said program counter register until each processor indicated as to be synchronized with said processor has transmitted said okay to synchronize signal via said synchronization bus, thereafter permitting the fetching of said next instruction by said program counter register, and

an execution unit for executing fetched instructions, whereby each processor is synchronized to said other of said processors indicated in said synchronization register on an instruction by instruction basis.

2. The synchronizing system of claim 1, wherein:

each processor further includes

a data register file including a plurality of data registers for storing data,

a bus connected to said synchronization register and said data register file for moving data from an instruction specified one of said plurality of data registers to said synchronization register in response to a register move instruction specifying one of said plurality of data registers as a source and said synchronization register as a destination.

3. The synchronizing system of claim 1, wherein:

each processor further includes

a data register file including a plurality of data registers for storing data,

a bus connected to said synchronization register and said data register file for moving data from said synchronization register to an instruction specified one of said plurality of data registers in response to a register move instruction specifying said synchronization register as a source and one of said plurality of data registers as a destination.

4. The synchronizing system of claim 1, wherein:

each processor further includes

a memory including an address input and a data port for storing data at a plurality of addressable memory storage locations;

an address generator connected to said address input of said memory, said address generator generating an address corresponding to one of said plurality of addressable memory storage locations of said memory, and

a data bus connected to said synchronization register and said data port of said memory for moving data from said synchronization register to one of said plurality of addressable memory storage locations of said memory corresponding to said address generated by said address generator in response to a register store instruction specifying said synchronization register as a destination.

5. The synchronizing system of claim 1, wherein:

each processor further includes

a memory including an address input and a data port for storing data at a plurality of addressable memory storage locations,

an address generator connected to said address input of said memory, said address generator generating an address corresponding to one of said plurality of addressable memory storage locations of said memory, and

a data bus connected to said synchronization register and said data port of said memory for moving data from one of said plurality of addressable memory storage locations of said memory corresponding to said address generated by said address generator to said synchronization register in response to a register load instruction specifying said synchronization register as a destination.

6. The synchronization system as claimed in claim 1, wherein:

each processor further includes

a synchronization flag memory connected to said synchronization control logic having stored therein an indication of whether said processor is in a synchronized mode or in an unsynchronized mode, and

wherein said synchronization logic unit

inhibits the fetching the next instruction by said program counter register until each processor indicated as to be synchronized with said processor has transmitted said okay to synchronize signal via said synchronization bus when said synchronization flag memory indicates said synchronized mode, and

permits the fetching of the next instruction by said program counter register regardless of the status of said synchronization bus and said synchronization register when said synchronization flag memory indicates said unsynchronized mode.

7. The synchronization system as claimed in claim 6, wherein:

said execution unit of each processor includes a first instruction responsive circuit for loading an indication of the synchronized mode into said synchronization flag memory in response to execution of a lock instruction, whereby said lock instruction begins said synchronized mode.

8. The synchronization system as claimed in claim 6, wherein:

said execution unit of each processor includes a second instruction responsive circuit for loading an indication of the unsynchronized mode into said synchronization flag memory in response to execution of a unlock instruction, whereby said unlock instruction ends said synchronized mode.

9. The synchronization system of claim 6, wherein:

said execution unit of each processor causes said synchronization flag memory to enter said unsynchronized mode for an interval from the storing of said changed address in said program counter until execution of an instruction at said changed address.

10. The synchronization system of claim 1, wherein:

each processor further includes

a data register file including a plurality of data registers for storing data,

a bus connected to said program counter and said data register file,

said execution unit moving a branch address from an instruction specified one of said plurality of data registers to said program counter in response to a branch instruction specifying one of said plurality of data registers as a source,

said okay to synchronize circuit inhibiting generation of said okay to synchronize signal during an interval from the execution of a branch instruction until execution of an instruction at said branch address.

11. The synchronizing system of claim 10, wherein:

each processor further includes

a return address register connected to said program counter,

said execution unit connected to said return address register for storing a return address corresponding to a next sequential instruction to that stored in said program counter in response to a subroutine call instruction.

12. The synchronizing system of claim 11, wherein:

each processor wherein

said execution unit storing said return address from said return address register in said program counter in response to a subroutine return instruction, and

said okay to synchronize circuit inhibiting generation of said okay to synchronize signal during an interval from the execution of a subroutine return instruction until execution of an instruction at said return address.

13. The method of operating a computer system having a plurality of processors in synchronism, each of the processors independently fetching and executing instructions, said method comprising the steps of:

storing in a program counter an address of a next sequential instruction to be executed by said processor;

generating at each processor a ready signal when said processor is ready to fetch an instruction;

storing at each processor an indication of other processor or processors to which said processor is to be synchronized;

inhibiting fetching a next instruction at each processor until said processor receives said ready signal from all other processor or processors to which said processor is to be synchronized according to said stored indication and thereafter fetching said instruction at each processor;

inhibiting fetching an instruction at each processor during an interval from the storing of a changed address in a program counter other than a next sequential address until execution of an instruction at said changed address at any one processor from all other processor or processors to which said processor is to be synchronized according to said stored indication; and

executing fetched instructions at each processor, whereby each processor is synchronized with said other processor or processors according to said stored indication on an instruction by instruction basis.

14. The method of claim 13, wherein:

said step of storing at each processor an indication of other processor or processors to which said processor is to be synchronized stores said indication in a synchronization register; and

further comprising the step of moving data from an instruction specified one of a plurality of data registers to said synchronization register in response to a register move instruction specifying one of said plurality of data registers as a source and said synchronization register as a destination.

15. The method of claim 13, wherein:

said step of storing at each processor an indication of other processor or processors to which said processor is to be synchronized stores said indication in a synchronization register; and

further comprising the step of moving data from said synchronization register to an instruction specified one of a plurality of data registers in response to a register move instruction specifying said synchronization register as a source and one of said plurality of data registers as a destination.

16. The method of claim 13, wherein:

said step of storing at each processor an indication of other processor or processors to which said processor is to be synchronized stores said indication in a synchronization register; and

further comprising the step of moving data from said synchronization register to one of a plurality of addressable memory storage locations of a memory in response to a register store instruction specifying said synchronization register as a source.

17. The method of claim 13, wherein:

said step of storing at each processor an indication of other processor or processors to which said processor is to be synchronized stores said indication in a synchronization register; and

further comprising the step of moving data from one of a plurality of addressable memory storage locations of a memory to said synchronization register in response to a register load instruction specifying said synchronization register as a destination.

18. The method of claim 13, wherein:

said step of storing at each processor an indication of other processor or processors to which the processor is to be synchronized includes specifying the other processor or processors to which the processor is to be synchronized in response to execution of a first instruction by the processor.

19. The method as claimed in claim 18, wherein:

said step of specifying the other processor or processors to which each processor is to be synchronized includes specifying via a first instruction executed by said processor a subset of the other processors to which said processor is to be synchronized, said processor operating asynchronously with respect to other processors not in said subset.

20. The method as claimed in claim 18, wherein:

said step of specifying the other processor or processors to which said processor is to be synchronized includes specifying via a first instruction executed by said processor a plurality of groups of processors to be synchronized with respect to other processors in the

same group and operating each group of processors asynchronously with respect to other groups of processors.

**21**. The method as claimed in claim **13**, further comprising the step of:

storing at each processor an indication of a synchronized mode or an unsynchronized mode; and

said step of inhibiting fetching an instruction at each processor until said processor receives said ready signal from all other processor or processors to which that processor is to be synchronized according to said stored indication includes

inhibiting fetching an instruction at each processor until said processor receives said ready signal from all other processor or processors to which that processor is to be synchronized according to said stored indication when said processor stores an indication of the synchronized mode, and

permitting fetching an instruction at each processor regardless of the status of the ready signal of other processors when said processor stores an indication of the unsynchronized mode.

**22**. The method as claimed in claim **21**, wherein:

said step of storing at each processor an indication of a synchronized mode or an unsynchronized mode includes storing an indication of the synchronized mode in response to execution of a lock instruction by said processor.

**23**. The method as claimed in claim **21**, wherein:

said step of storing at each processor an indication of a synchronized mode or an unsynchronized mode includes storing an indication of the unsynchronized mode in response to execution of an unlock instruction by said processor.

**24**. The method of claim **21**, wherein:

said step of storing at each processor an indication of a synchronized mode or an unsynchronized mode includes storing an indication of the unsynchronized mode for an interval from the storing of said changed address in said program counter until execution of an instruction at said changed address.

**25**. The method of claim **13**, further comprising the step of:

moving a branch address from an instruction specified one of a plurality of data registers to said program counter in response to a branch instruction specifying one of said plurality of data registers as a source; and

inhibiting fetching an instruction at each processor during an interval from the execution of a branch instruction until execution of an instruction at said branch address at any one processor from all other processor or processors to which that processor is to be synchronized according to said stored indication.

**26**. The method of claim **25**, further comprising the step of:

storing a return address corresponding to a next sequential instruction to that stored in said program counter in response to a subroutine call instruction.

**27**. The method of claim **26**, wherein:

inhibiting fetching a next instruction at each processors during an interval from the execution of a subroutine return instruction until execution of an instruction at said return address at any one processor from all other processor or processors to which that processor is to be synchronized according to said stored indication.

* * * * *