UNITED STATES PATENT AND TRADEMARK OFFICE

BEFORE THE PATENT TRIAL AND APPEAL BOARD

GOOGLE LLC,

Petitioner

v.

CLEAR IMAGING RESEARCH LLC,

Patent Owner.

CASE: IPR2026-00181

U.S. Patent No. 9,860,450

DECLARATION OF DR. ANDREW WOLFE

I hereby declare that all statements made herein of my own knowledge are true and that all statements made on information and belief are believed to be true; and further, that these statements were made with the knowledge that willful false statements and the like so made are punishable by fine or imprisonment, or both, under Section 1001 of Title 18 of the United States Code.

Date: 1/29/2026 By: _____

Andrew Wolfe, Ph.D.

TABLE OF CONTENTS

I. INTRODUCTION 1

II. BACKGROUND AND QUALIFICATIONS 1

A. Academic Background and Experience 1

B. Relevant Professional Experience 4

III. SUMMARY OF OPINIONS 8

IV. LEVEL OF ORDINARY SKILL IN THE ART 9

V. LEGAL STANDARDS 10

VI. MATERIALS CONSIDERED 16

VII. BACKGROUND TECHNOLOGY 21

A. Image Stabilization (IS) Technology 21

B. Software-Based Motion Tracking 26

C. Stabilization Based on User Input 27

D. Stabilization and Lens Focal Length 29

E. Video Stabilization 30

F. Video Compression 32

G. Compact Camcorders 33

VIII. OVERVIEW OF THE ’450 PATENT 35

A. Specification 35

B. Prosecution History 37

C. Claims 40

IX. PRIOR PROCEEDINGS 47

X. CLAIM CONSTRUCTION 49

A. Means-Plus-Function 49

1. "a processor configured to..."/"…by the processor…" (claims 1-9, 11-22, 24-32) 50

2. "display"/"user interface" (claims 10, 13, 23, 26 and 32).....51

B. Other Claim Constructions.....51

XI. GROUNDS 1A, 1B, and 1C.....52

A. 1A: Dutta (Ex-1007) and Akifumi (Ex-1009) (Claims 1-26 and 28-32) 52

1. Dutta (Ex-1007) 52

2. Akifumi (Ex-1009).....62

3. Motivation to Combine Dutta (Ex-1007) and Akifumi (Ex-1009) 71

4. Independent Claims 1, 14, 28, and 29.....75

(a) 1[pre] A method for use in an imaging device comprising an image sensor, a processor, a memory, and one or more motion sensors, the method comprising; 14[pre] An imaging device, comprising; 28[pre] A method for use in an imaging device comprising an image sensor, a processor, a memory, and one or more motion sensors, the method comprising; 29[pre] An imaging device, comprising 75

(b) [1.1] capturing a sequence of images with the image sensor, wherein the sequence of images comprise a video, and storing the images in the memory; [14.1] an image sensor configured to capture a sequence of images, wherein the sequence of images comprise a video, and store the images in a memory; [28.1] capturing a sequence of images with the image sensor, wherein the sequence of images comprise a video; [29.1] an image sensor configured to capture a sequence of images, wherein the sequence of

images comprise a video.....83

(c) [1.2] detecting, by the one or more motion sensors, motion information for one or more images of the sequence of images, wherein the motion information represents motion of the device during capturing of the one or more images of the sequence of images, and storing the motion information in the memory synchronously with the storing of the one or more images; [14.2] one or more motion sensors configured to detect motion information for one or more images of the sequence of images, wherein the motion information represents motion of the imaging device during capturing of the one or more images of the sequence of images, and store the motion information in the memory synchronously with the storing of the one or more images; and; [28.2] detecting, by the one or more motion sensors, motion information for one or more images of the sequence of images, wherein the motion information represents motion of the device during capturing of the one or more images of the sequence of images; [29.2] one or more motion sensors configured to detect motion information for one or more images of the sequence of images, wherein the motion information represents motion of the imaging device during capturing of the one or more images of the sequence of images 89

(d) [1.3] determining, by the processor, a vertical shift value and a horizontal shift value for one or more images of the sequence of images based at least in part on the motion information; [14.3] a processor configured to: determine a vertical shift value and a horizontal shift value for one or more images of the sequence of images based at least in part on the motion information; [28.3] determining, by the processor, a vertical shift value and a horizontal shift value for one or more images of the sequence of images based at least in part on the motion

information; [29.3] a processor configured to: determine a vertical shift value and a horizontal shift value for one or more images of the sequence of images based at least in part on the motion information 96

(e) [1.4] modifying, by the processor, one or more images of the sequence of images based at least in part on the vertical and the horizontal shift values; [14.4] [a processor configured to:] …modify one or more images of the sequence of images based at least in part on the vertical and the horizontal shift values; and [28.4] modifying, by the processor, one or more images of the sequence of images based at least in part on the vertical and the horizontal shift values; [29.4] [a processor configured to:] …modify one or more images of the sequence of images based at least in part on the vertical and the horizontal shift values; and.....101

(f) [1.5] combining, by the processor, the modified images to obtain a final video; and; [14.5] [a processor configured to:] …combine the modified images to obtain a final video; and; [28.5] combining, by the processor, the modified images, and applying a video compression technique to obtain a final video; and; [29.5] [a processor configured to:] …combine the modified images, and apply a video compression technique to obtain a final video; and 103

(g) [1.6] storing the final video in the memory; [14.6] wherein the memory is further configured to store the final video; [28.6] storing the final video in the memory; [29.6] a memory configured to store the final video 106

5. Claim 2: The method of claim 1, wherein the processor determines the vertical and horizontal shift values for one or more images for which the motion information is detected; Claim 15: The imaging device of claim 14,

wherein the processor is configured to determine the vertical and horizontal shift values for one or more images of the sequence of images for which the motion information is detected.....107

6. Claim 3: The method of claim 1, wherein the processor modifies one or more images for which the vertical and horizontal shift values are determined; Claim 16: The imaging device of claim 14, wherein the processor is configured to modify one or more images of the sequence of images for which the vertical and horizontal shift values are determined.....108

7. Claim 4: The method of claim 1, wherein the processor modifies one or more images of the sequence of images such that effect of motion of the device during capturing of the one or more images of the sequence of images is reduced in the final video; Claim 17: The imaging device of claim 14, wherein the processor is configured to modify one or more images of the sequence of images such that effect of motion of the device during capturing of the one or more images of the sequence of images is reduced in the final video.....109

8. Claim 5: The method of claim 1, wherein the processor determines a vertical shift value and a horizontal shift value for each image of the sequence of images; Claim 18: The imaging device of claim 14, wherein the processor is configured to determine a vertical shift value and a horizontal shift value for each of the images of the sequence of images 110

9. Claim 6: The method of claim 1, wherein the motion information represents motion of the device at time of capturing of one or more images of the sequence of images; Claim 19: The imaging device of claim 14, wherein the motion information detected by the one or more motion sensors represents motion of the device at time of capturing of one or more images of the sequence of images 111

10. Claim 7: The method of claim 1, wherein the one or more images of the sequence of images is at least two images, and wherein the motion information represents motion of the device between capturing of consecutive images; Claim 20: The imaging device of claim 14, wherein the one or more images of the sequence of images is at least two images, and wherein the motion information detected by the one or more motion sensors represents motion of the device between capturing of consecutive images; Claim 30: The imaging device of claim 29, wherein the one or more images of the sequence of images is at least two images, and wherein the motion information detected by the one or more motion sensors represents motion of the device between capturing of consecutive images 112

11. Claim 8: The method of claim 1, wherein the vertical and horizontal shift values for an image indicate how much the image is displaced due to motion of the device during capturing of the image; Claim 21: The imaging device of claim 14, wherein the processor is configured to determine a vertical shift value and a horizontal shift value for an image such that the vertical shift value and the horizontal shift value indicate how much the image is displaced due to motion of the device during capturing of the image.....114

12. Claim 9: The method of claim 1, wherein the modifying by the processor of the one or more images of the sequence of images comprises shifting a reference point in each image according to the vertical shift value and the horizontal shift value for the image in a direction that reduces the effect of motion of the device in the final video; Claim 22: The imaging device of claim 14, wherein the processor is configured to modify one or more images of the sequence of images by shifting a reference point in each image according to the vertical shift value and the horizontal shift value for the image in a direction that reduces the effect of motion of the device in the final video 115

13. Claim 10: The method of claim 1, wherein the method further comprises displaying the final video in a user

interface; Claim 23: The imaging device of claim 14, wherein the device further comprises a display configured to display the final video 116

14. Claim 11: The method of claim 1, wherein the method further comprises modifying the sequence of images using a video compression technique; Claim 24: The imaging device of claim 14, wherein the processor is further configured to modify the sequence of images using a video compression technique 119

15. Claim 12: The method of claim 1, wherein determining a vertical shift value and a horizontal shift value for one or more images of the sequence of images is based at least in part on the focal distance of a lens of the imaging device; Claim 25: The imaging device of claim 14, wherein the processor is configured to determine a vertical shift value and a horizontal shift value for one or more images of the sequence of images based at least in part on the focal distance of a lens of the imaging device; Claim 31: The imaging device of claim 29, wherein the processor is configured to determine a vertical shift value and a horizontal shift value for one or more images of the sequence of images based at least in part on the focal distance of a lens of the imaging device 120

16. Claim 13: The method of claim 1, wherein the method further comprises receiving user input in a user interface, and at least one of modifying one or more images of the sequential images or combining the modified images to obtain a final video is based at least in part on the user input; Claim 26: The imaging device of claim 14, wherein the device further comprises a display configured to receive user input, and the device is configured to modify one or more images of the sequential images and to obtain a final video based at least in part on the user input; Claim 32: The imaging device of claim 29, wherein the device further comprises a display configured to receive user input, and the device is configured to modify one or more images of the sequential images and to obtain a final video based at least in part on the user input 123

B. 1B: Dutta (Ex-1007), Akifumi (Ex-1009), and Creative Camcorder (Ex-1008) (Claims 13, 26, and 32) 127

1. Creative Camcorder (Ex-1008) 127

2. Motivation to Combine Dutta (Ex-1007), Akifumi (Ex-1009), and Creative Camcorder (Ex-1008) 128

3. Claim 13: The method of claim 1, wherein the method further comprises receiving user input in a user interface, and at least one of modifying one or more images of the sequential images or combining the modified images to obtain a final video is based at least in part on the user input; Claim 26: The imaging device of claim 14, wherein the device further comprises a display configured to receive user input, and the device is configured to modify one or more images of the sequential images and to obtain a final video based at least in part on the user input; Claim 32: The imaging device of claim 29, wherein the device further comprises a display configured to receive user input, and the device is configured to modify one or more images of the sequential images and to obtain a final video based at least in part on the user input 130

C. 1C: Dutta (Ex-1007), Akifumi (Ex-1009), and Balmer (Ex-1010) (Claim 27) 131

1. Balmer (Ex-1010) 131

2. Motivation to Combine Dutta (Ex-1007), Akifumi (Ex-1009), and Balmer (Ex-1010) 133

3. Claim 27: The imaging device of claim 14, wherein the processor is two or more processors 136

XII. CONCLUSION 136

I, Andrew Wolfe, Ph.D., declare as follows:

I. INTRODUCTION

1. I have been retained by Google LLC ("Google" or "Petitioner") to provide my opinions regarding claims 1-32 of U.S. Patent No. 9,860,450 (the '450 patent") (Ex-1001).

2. My analysis is based on my years of education, research, and experience, as well as my investigation and study of relevant materials, including those cited herein.

3. I am being compensated for my services at my standard consulting rate of $750 per hour and being reimbursed for expenses incurred during the course of this work. My compensation is not contingent in any way on the conclusions I reach.

II. BACKGROUND AND QUALIFICATIONS

4. My current curriculum vitae is attached as Ex-1006, which provides further details about qualifications, academic background, and professional experience. The following briefly summarizes my relevant qualifications and experience.

A. Academic Background and Experience

5. In 1985, I earned the B.S.E.E. degree in Electrical Engineering and Computer Science from the Johns Hopkins University. In 1987, I received the M.S. degree in Electrical and Computer Engineering from Carnegie Mellon University

and in 1992, I received the Ph.D. degree in Computer Engineering from Carnegie Mellon University. My doctoral dissertation proposed a new approach for the architecture of a computer processor.

6. I have taught at some of the world's leading institutions in the fields of processor technology, computer systems, consumer electronics, software, design tools, data security, cryptography and intellectual property issues. These institutions include Stanford University, Princeton University, Carnegie Mellon University, and Santa Clara University.

7. From 1991 through 1997, I served on the Faculty of Princeton University as an Assistant Professor of Electrical Engineering. At Princeton, I taught undergraduate and graduate-level courses in Computer Architecture, Advanced Computer Architecture, Display Technology, and Microprocessor Systems, and conducted sponsored research in the area of computer systems and related topics. From 1999 through 2002, I taught a Computer Architecture course to both undergraduate and graduate students at Stanford University multiple times as a Consulting Professor. At Princeton, I received several teaching awards, both from students and from the School of Engineering. I have also taught advanced microprocessor architecture to industry professionals in IEEE and ACM sponsored seminars. I am currently an Assistant Teaching Professor at Santa Clara University

teaching courses on Microprocessor Systems, Real-time Embedded Systems, Advanced Logic Design, System Prototyping, Product Development, and Mechatronics. I have been working on image-processing applications since the mid-90s. I have supervised numerous undergraduate research projects incorporating image processing, computer vision, image recognition, camera-based text recognition, and machine-learning-based classifiers. These have included both custom algorithm development and the use of open-source libraries such as Open-CV and YOLO.

8. I have published more than fifty peer-reviewed papers in computer architecture and computer systems and IC (integrated circuit) design. My contributions in the areas of low-power systems and power management have been widely recognized. My CV lists all publications that I have authored in the previous 10 years.

9. I have also chaired IEEE and ACM conferences in microarchitecture and IC design and served as an associate editor for IEEE and ACM journals. I served on the IEEE Computer Society Awards committee. I am an IEEE Fellow, and IEEE Computer Society Distinguished Contributor, and a Member of ACM. My elevation to IEEE Fellow was based on contributions in hardware code compression of embedded software, power consumption analysis, and optimization. I am a named

inventor on at least fifty-seven U.S. patents and thirty-seven foreign patents including patents related to image processing and pattern recognition.

10. I have been the invited keynote speaker at the ACM/IEEE International Symposium on Microarchitecture and at the International Conference on Multimedia. I have also been an invited speaker on various aspects of technology or the PC industry at numerous industry events including the Intel Developer's Forum, Microsoft Windows Hardware Engineering Conference, Microprocessor Forum, Embedded Systems Conference, Comdex, and Consumer Electronics Show as well as at the Harvard Business School and the University of Illinois Law School. I have been interviewed on subjects related to technology and the electronics industry by publications such as the Wall Street Journal, New York Times, LA Times, Time, Newsweek, Forbes, and Fortune as well as CNN, NPR, and the BBC. I have also spoken at dozens of universities including MIT, Stanford, University of Texas, Carnegie Mellon, UCLA, University of Michigan, Rice University, and Duke University.

B. Relevant Professional Experience

11. I am the founder and sole employee of Wolfe Consulting. Through Wolfe Consulting, I provide technical and business analytics to businesses on processor technology, computer systems, consumer electronics, software, design tools, data security, cryptography and intellectual property issues. I have more than

thirty years' experience developing products, researching, consulting, and teaching in those fields. In that time, I have worked as a computer architect, computer system designer, and as an executive in the PC and electronics business.

12. I have more than 35 years of experience as a computer architect, computer system designer, personal computer graphics designer, educator, and executive in the electronics industry.

13. In 1983, I began designing touch sensors, microprocessor-based computer systems, and I/O (input/output) cards for personal computers as a senior design engineer for Touch Technology, Inc. During the course of my design projects with Touch Technology, I designed I/O cards for PC-compatible computer systems, including the IBM PC-AT, to interface with interactive touch-based computer terminals that I designed for use in public information systems. I continued designing and developing related technology as a consultant to the Carroll Touch division of AMP, Inc., where in 1986 I designed one of the first custom touch-screen integrated circuits. I designed the touch/pen input system for the Linus WriteTop, which many believe to be the first commercial tablet computer.

14. From 1986 through 1987, I designed and built a high-performance computer system as a student at Carnegie Mellon University. From 1986 through

early 1988, I also developed the curriculum, and supervised the teaching laboratory, for processor design courses.

15. In the latter part of 1989, I worked as a senior design engineer for ESL-TRW Advanced Technology Division. While at ESL-TRW, I designed and built a bus interface and memory controller for a workstation-based computer system, and also worked on the design of a multiprocessor system.

16. At the end of 1989, I (along with some partners) reacquired the rights to the technology I had developed at Touch Technology and at AMP, and founded The Graphics Technology Company. Over the next seven years, as an officer and a consultant for The Graphics Technology Company, I managed the company's engineering development activities and personally developed dozens of touch screen sensors, controllers, and interactive touch-based computer systems. I designed components for many point-of-sale systems and aided in the system development including products used by Sears, McDonalds, UPS, and other high-volume retailers.

17. I have consulted, formally and informally, for a number of fabless semiconductor companies. In particular, I have served on the technology advisory boards for two processor design companies: BOPS, Inc., where I chaired the board, and Siroyan Ltd., where I served in a similar role for three networking chip companies—Intellon, Inc., Comsilica, Inc., and Entridia, Inc.—and one 3D game

accelerator company, Ageria, Inc. I have consulted on cell-phone camera chip design for a major phone manufacturer and worked on still/video camera chip design for a startup. I have managed a video algorithms research team and managed the development of chips that include video playback and graphics imaging. I have patents in the area of digital photography and visual displays. I have received grants and published research on video signal processors. I have participated in the development of digital video recorders and DVD players. I have also worked as a professional photographer.

18. I have also served as a technology advisor to Motorola and to several venture capital funds in the United States and Europe. Currently, I am a director at Turtle Beach Corporation, providing guidance in its development of premium audio peripheral devices and user input devices for PCs, mobile devices, and gaming consoles.

19. From 1997 through 2002, I held a variety of executive positions at a publicly held fabless semiconductor company originally called S3, Inc. and later called Sonicblue Inc. I held the positions of Chief Technology Officer, Vice President of System Integration Products, Senior Vice President of Business Development, and Director of Technology, among others. During my time at Sonicblue we launched dozens of PC products and more than 30 new consumer

electronics products including a variety of products incorporating wired and wireless communications technologies.

III. SUMMARY OF OPINIONS

20. This declaration explains the conclusions I have formed based on my analysis. In summary, it is my opinion that:

- **Ground 1A:** The combination of Dutta (Ex-1007)[1] and Akifumi (Ex-1009)[2] renders obvious claims 1-26 and 28-32.
- **Ground 1B:** The combination of Dutta (Ex-1007), Akifumi (Ex-1009), and Creative Camcorder (Ex-1008)[3] renders obvious claims 13, 26, and 32.
- **Ground 1C:** The combination of Dutta (Ex-1007), Akifumi (Ex-1009), and Balmer (Ex-1010)[4] renders obvious claim 27.

---

[1] U.S. Patent Pub. 2003/0076408.

[2] Certified Translation and Original Application of Japanese Patent Application No. 2000-023024.

[3] Article titled "Creative Camcorder," included in Popular Electronics, March 1996 issue.

[4] U.S. Patent No. 5,881,272.

21. In my opinion, Dutta, Akifumi, Creative Camcorder, and Balmer are analogous to the ’450 patent and each other because they are in the same field of endeavor (for example, image processing). Further, as I explain in more detail below, Dutta, Akifumi, Creative Camcorder, and Balmer are reasonably pertinent to the problems the inventor was attempting to solve. For example, like the ’450 patent, Dutta, Akifumi, and Creative Camcorder relate to stabilizing images or videos, and Balmer discloses a multi-processor architecture that would improve processing performance when stabilizing images or videos.

IV. LEVEL OF ORDINARY SKILL IN THE ART

22. In rendering the opinions set forth in this declaration, I was asked to consider the patent claims and the prior art from the perspective of a hypothetical person having ordinary skill in the art (“POSITA”) at the time of the priority date of the ’450 patent. I have been asked to assume for purposes of my analysis that the priority date is March 25, 2004.[5]

23. I understand that a POSITA is presumed to have the skill and experience of an ordinary worker in the field at the time of the priority date of the

[5] My opinions would be the same if the priority date were the March 24, 2005 filing date of the first non-provisional application the ’450 patent claims priority to.

challenged patent. Based on my knowledge and experience in the field and my review of the ’450 patent and file history, in my opinion a POSITA would have had at least a Bachelor’s Degree in an academic area emphasizing electrical engineering, computer science, or a similar discipline, and two years of experience related to imaging technologies. More education could replace work experience, and vice-versa.

24. Before March 25, 2004, my level of skill in the art was at least that of a POSITA. I am qualified to provide opinions concerning what a POSITA would have known and understood at the time, and my analysis and conclusions herein are from the perspective of a POSITA as of that date.

V. LEGAL STANDARDS

25. I am not a lawyer and do not provide any legal opinions, but I have been advised that certain legal standards are to be applied by technical experts in forming opinions regarding meaning and validity of patent claims. I have applied the legal standards described below.

26. It is my understanding that the prior art need not expressly disclose a claimed limitation so long as the claimed limitation necessarily flows from a prior art disclosure. I also understand that evidence outside the prior art reference (i.e., extrinsic evidence) can be examined to determine whether a feature, while not expressly discussed in a reference, is necessarily present in that reference.

27. I have been informed that a patent claim may be unpatentable as obvious if the subject matter described by the claim as a whole would have obvious to a POSITA in view of a prior art reference, or a combination of prior art references, at the time the claimed invention was made.

28. I understand that "at the time the claimed invention was made" may also be referred to as the priority date.

29. I understand that claims are first construed to determine their scope, and then the prior art is applied to the claims. I understand that claims are read from the perspective of a POSITA as of the priority date. I understand that the words of a claim are generally given their ordinary and customary meaning as understood by a POSITA in light of the entire patent specification and prosecution history.

30. I also understand that words of a claim may be given a meaning other than their ordinary and customary meaning if: (1) a patentee expressly and unambiguously defined a term in a way that is different from its ordinary meaning; and (2) a patentee "disclaims" the full scope of a claim term's ordinary meaning, for example, by making clear and unambiguous statements during prosecution that a claim term does or does not encompass certain features.

31. I understand that there is a rebuttable presumption that a claim limitation that does not use the term "means" is not subject to means-plus-function

interpretation. I understand that a construction for a claim term that is subject to means-plus-function interpretation includes the function and the corresponding structure, material, or acts described in the specification and equivalents thereof.

32. I also understand that a petitioner seeking to demonstrate that the prior art discloses a means-plus function limitation must prove that the corresponding structure—or an equivalent—was present in the prior art and performing the same claimed function.

33. I understand that the standard for determining whether the prior art discloses the corresponding structure or an equivalent is whether there are insubstantial differences, which means that if the assertedly equivalent structure performs the claimed function in substantially the same way to achieve substantially the same result as the corresponding structure described in the specification, it is equivalent.

34. I understand that proving structural equivalence does not require a component-by-component analysis, but rather that it is sufficient to show structure, materials, or acts that perform the claimed function in substantially the same way to achieve substantially the same result because the claim limitation is the overall structure corresponding to the claimed function and not individual components.

35. I understand that although the ultimate question of the obviousness of a claimed invention is a legal determination, obviousness is based on several factual inquiries, including: the scope and content of the prior art, the differences between the claimed subject matter and the prior art, the level of ordinary skill in the art at the time of the invention, and any "objective indicia" or "secondary considerations" of non-obviousness, which must all be considered.

36. I understand that, in determining the scope and content of the prior art, a reference is considered relevant prior art if it falls within the field of the inventor's endeavor, or if it is reasonably pertinent to the particular problem that the inventor was trying to solve. A reference is reasonably pertinent if it logically would have commended itself to an inventor's attention in considering his problem.

37. I understand that, to assess the differences between prior art and the claimed subject matter, the claimed invention must be considered as a whole. I understand that this involves showing that a POSITA, confronted by the same problems as the inventor and with no knowledge of the claimed invention, would have identified the elements in the prior art and combined them in the claimed manner.

38. I understand that there are several accepted rationales for combining prior-art references. For instance, I understand that it is considered obvious to:

- combine prior-art elements according to known methods to yield predictable results;
- substitute one known element for another to obtain predictable results (also called a "simple substitution");
- use the prior-art elements in a predictable way according to their established functions;
- apply a known technique to a known device (method or product) ready for improvement to yield predictable results (also called a "known technique");
- choose from a finite number of identified, predictable solutions, with a reasonable expectation of success (also called "obvious to try");
- or if there is some teaching, suggestion, or motivation in the prior art that would have led a POSITA to modify a prior-art reference or combine prior-art teachings to arrive at the claimed invention (also called "teaching-suggestion-motivation").

39. I understand, however, that a POSITA does not need to have the same motivations or reasons to combine the prior art as the inventors, and can arrive at the claimed invention for completely different reasons than the inventors.

40. However, I also understand that the prior art cannot be modified or combined using "hindsight." I understand that hindsight refers to situations in which the patent-at-issue is used as a framework to pick and choose pieces from the prior art to arrive at the claims, or adopting rationales identified by the patent-at-issue that those in the art would not have recognized. Instead, I understand that the obviousness inquiry is evaluated from the perspective of a POSITA as of the critical date of the patent-at-issue, with all the prior art before them, to determine whether the POSITA would have independently arrived at the claimed invention without the benefit of the patent-at-issue for guidance.

41. I understand that "objective indicia" or "secondary considerations" of non-obviousness include whether: (1) there was a long-felt need for the claimed invention; (2) the claimed invention has achieved commercial success; (3) there was copying of the claimed invention by others; (4) there were failed attempts by others to make the alleged invention; (5) there was praise of the invention in the field; and (6) there was skepticism the claimed invention could be achieved, among a few others.

42. I have considered the secondary consideration of non-obviousness that I am aware of at this time. I am not currently aware of any secondary indicia that would impact my opinions. As of the time that I prepared this declaration, the Patent

Owner had not identified any secondary considerations of non-obviousness. Therefore, I reserve the right to elaborate on my understanding of these secondary considerations and to address any additional secondary considerations that Patent Owner may subsequently identify.

43. Finally, I understand that, in an *inter partes* review proceeding, the obviousness of a claim must be demonstrated by "a preponderance of the evidence," and that this burden falls on the Petitioner. I understand that the preponderance of the evidence standard requires that a reasonable factfinder could find a material fact is more probable than the nonexistence of that fact. It does not allow for speculation regarding specific facts and is instead focused on whether the evidence more likely than not demonstrates the existence or non-existence of specific material facts. I understand that "preponderance of the evidence" is a lower standard than "clear and convincing evidence" (which requires a fact to be substantially more likely to be true than untrue), or "beyond a reasonable doubt" (which is an exceedingly high standard that I understand is generally reserved for criminal matters).

44. I have applied the "preponderance of the evidence" standard throughout my declaration.

VI. MATERIALS CONSIDERED

45. My analysis and conclusions are based on my educational background and experience in the field.

46. As part of my analysis for this declaration, I have considered the background knowledge/technologies that were commonly known to POSITAs in this art before the priority date, my own knowledge and experience gained from my work experience in the field and related disciplines, and my experience working with others involved in this field and related disciplines.

47. In addition, I have reviewed the ’450 patent (Ex-1001) as well as the patents and other documents cited herein, which are also listed below. I have also reviewed the expert declaration submitted with Samsung’s prior IPR (Ex-1003 in IPR2020-01394).

- Ex-1001: U.S. Patent No. 9,860,450
- Ex-1002: Prosecution History of the ’450 Patent (“’450FH”)
- Ex-1003: Prosecution History of App. No. 14/690,818
- Ex-1007: U.S. Patent Pub. 2003/0076408 (“Dutta”)
- Ex-1008: Article titled “Creative Camcorder,” included in Popular Electronics, March 1996 issue (“Creative Camcorder”)
- Ex-1009: Certified Translation and Original Application of Japanese Patent Application No. 2000-023024 (“Akifumi”)
- Ex-1010: U.S. Patent No. 5,881,272 (“Balmer”)

- Ex-1011: Certified Translation and Original Application of Japanese Patent Application No. 2000-224462 ("Hara")
- Ex-1012: U.S. Patent No. 4,717,958 ("Gal")
- Ex-1014: Oshima et al., *History of World's First Commercialization of Image Stabilizers for Handheld Cameras*, 2023 8th IEEE History of Electrotechnology Conference (HISTELCON), 2023 ("Oshima1")
- Ex-1015: *Camera feature search*, DP Review
- Ex-1016: Kinugasa et al., *Electronic Image Stabilizer for Video Camera Use*, IEEE Transactions on Consumer Electronics, Vol. 36, No. 3, August 1990 ("Kinugasa1")
- Ex-1017: U.S. Pat. No. 7,286,163
- Ex-1018: U.S. Patent Pub. 2001/0041012
- Ex-1019: U.S. Patent No. 7,274,390
- Ex-1020: Paik et al., *An Edge Detection Approach to Digital Image Stabilization Based on Tri-State Adaptive Linear Neurons*, IEEE Transactions on Consumer Electronics, Vol. 37, No. 3, August 1991 ("Paik")
- Ex-1021: U.S. Patent 7,619,656
- Ex-1022: U.S. Pat No. 6,263,162

- Ex-1023: Kinugasa et al., *A Video Pre/Post-Processing LSI for Video Capture*, IEEE Transactions on Consumer Electronics, Vol. 42, No. 3, August 1996 ("Kinugasa2")
- Ex-1024: Oshima et al., *VHS Camcorder with Electronic Image Stabilizer*, IEEE Transactions on Consumer Electronics, Vol. 35, No. 4, November 1989 ("Oshima2")
- Ex-1025: Morimura et al., A Digital Video Camera System, IEEE Transactions on Consumer Electronics, Vol. 36, No. 4, November 1990 ("Morimura")
- Ex-1026: *Clear Imaging Rsch. LLC v. Google LLC*, No. 3:25-cv-00221 (S.D. Cal. Dec. 17, 2025) (Google's Responsive Claim Constructions)
- Ex-1027: *Clear Imaging Rsch. LLC v. Google LLC*, No. 3:25-cv-00221 (S.D. Cal. Jan. 7, 2026) (Joint Hearing Statement)
- Ex-1028: *Clear Imaging Rsch., LLC v. Samsung Elecs. Co.*, No. 2:19-cv-00326 (E.D. Tex.) (Docket)
- Ex-1029: *Clear Imaging Rsch., LLC v. Samsung Elecs. Co.*, No. 2:19-cv-00326, Dkt. 113 (E.D. Tex. Oct. 30, 2020)
- Ex-1030: *Clear Imaging Rsch., LLC v. Samsung Elecs. Co.*, No. 2:19-cv-00326, Dkt. 125 (E.D. Tex. Dec. 8, 2020)

- Ex-1031: *Clear Imaging Rsch., LLC v. Apple Inc.*, No. 3:23-cv-00673 (S.D. Cal.) (Docket)
- Ex-1032: *Clear Imaging Rsch., LLC v. Google, LLC*, No. 3:25-cv-00221 (S.D. Cal.) (Docket)
- Ex-1033: *Clear Imaging Rsch., LLC v. Lenovo Grp. Ltd.*, No. 2:25-cv-00240 (E.D. Tex.) (Docket)
- Ex-1034: John R. Ragazzini & Gene F. Franklin, *Sampled-Data Control Systems* (1958)
- Ex-1035: M. Brain, *How Microprocessors Work*, HowStuffWorks, https://web.archive.org/web/20030405084757/http://computer.howstuffworks.com/microprocessor2.htm
- Ex-1036: M.S. Schmalz, *Organization of Computer Systems: Introductory Material, Computer Abstractions, and Technology*, Univ. of Fla., https://web.archive.org/web/20020330100232/https://www.cise.ufl.edu/~mssz/CompOrg/CDAintro.html
- Ex-1037: M.S. Schmalz, *Organization of Computer Systems: Processors*, Univ. of Fla., https://web.archive.org/web/20020330082257/http://www.cise.ufl.edu:80/~mssz/CompOrg/CDA-proc.html
- Ex-1038: Microsoft Computer Dictionary, 5th Ed. 2002

- Ex-1039: Webster's New World Computer Dictionary, 10th Ed. 2003
- Ex-1040: *Camera feature search*, DP Review, https://www.dpreview.com/products/search/cameras#criterias=SpecsImageStabilizationNew&sort=oldestFirst&paramSpecsImageStabilizationNew=optical
- Ex-1041: *Minolta DiMAGE A1 Review* (Nov. 11, 2003), DP Review, https://www.dpreview.com/reviews/minoltadimagea1
- Ex-1042: *Minolta DiMAGE A1; An Integral Lens Digital SLR*, Shutterbug (Mar. 1, 2004), https://www.shutterbug.com/content/minolta-dimage-a1-integral-lens-digital-slr
- Ex-1043: CIPA DC-002-Translation-2003, *Standard Procedure for Measuring Digital Still Camera Battery Consumption*, Standard of the Camera & Imaging Products Association (Dec. 17, 2003), https://www.cipa.jp/std/documents/download_e.html?DC-002_e
- Ex-1044: CIPA Standards, Camera & Imaging Products Association, https://www.cipa.jp/e/std/std-sec.html

VII. BACKGROUND TECHNOLOGY

A. Image Stabilization (IS) Technology

48. Image blurring, which can occur from inadvertent camera shake, i.e., natural unsteadiness when holding a camera by hand, has been a longstanding challenge in photography and videography. To avoid noticeable image blurring

when holding a camera by hand, a rule of thumb for the popular 35-millimeter frame sized cameras used by both amateur and professional photographers for many years has been to set the shutter speed, measured in seconds, to no-slower than the inverse of the lens focal length, expressed in millimeters. *See, e.g.*, Ex-1011 (Hara), ¶39.

49. For example, using a 50-mm lens, the shutter speed would be set to 1/50 second or faster to avoid blur. When slower shutter speeds are needed, for example to take pictures in dim lighting when flash photography is not wanted or practical, the camera would be placed on a stable support such as a tripod to keep it steady, often an inconvenience if practical at all. This problem was met with modern solutions in the late 1980s, in part through the development of Image Stabilization (IS) technology, which enables blur-free images to be taken with hand-held cameras at much-slower shutter speeds. Ex-1014 (Oshima1), 56.

50. Image stabilization is performed within the lens optics (Optical Image Stabilization), or within the camera body (In-Body Image Stabilization), or sometimes both.

51. In the 1980s, "rotary gyro-sensors, the key devices for IS, were available, but too large and heavy to be mounted on a camera." *Id.*, 57. Vibration gyro-sensors could be made smaller, but they were unstable due to "noise generated by external shocks" that "would cause blurring of the image when used for IS." *Id.*

By introducing "tuning-fork vibration gyro-sensor," Panasonic's camera, for example, could perform image stabilization and "compensate for handshake and camera movement in all four directions, up, down, left, and right." *Id.* As the sensor detected camera movement, it "move[d] the IS lens in the opposite direction to steer the image onto the image sensor. This reduce[d] blurred images that would normally occur as a result of camera movement. In addition, the IS [was] particularly effective when taking pictures where you [were] zoomed in, at a distance from the subject. Using a high magnification [would] exaggerate[] the effect of camera movement, causing increased image blurring. IS [could] compensate[] for this movement, producing a clear picture." *Id.*

52. Multiple optical image stabilization cameras were commercially available even prior to 2004. Ex-1015 (*Camera feature search*, DP Review) (partial list of cameras, with older cameras first); Ex-1040 (*Camera feature search*, DP Review) (partial list of cameras when "Optical" is checked under "Image Stabilization," with older cameras first). Cameras that moved the image sensor to stabilize an image were also commercially available prior to 2004. Ex-1041 (*Minolta DiMAGE A1 Review*, DP Review) (review of the Minolta DiMAGE A1 stating on its face that it was published 11/11/2003 and that the camera had "image stabilization (called 'Anti Shake') thanks to a CCD which can move on x and y axis"); Ex-1042

(*Minolta DiMAGE A1; An Integral Lens Digital SLR*, Shutterbug) (review of the Minolta DiMAGE A1 stating on its face that it was published 3/1/2004 and that the camera "automatically set[] up the Minolta Anti-Shake system, indicated by a 'nervous' hand signal on the back of the camera" at slow shutter speeds "or when the unit sense[d] a 'shaky' image might be made").

53. Stabilization systems are also described in the literature. For example, Kinugasa1 describes an electronic image stabilizer for video camera use:

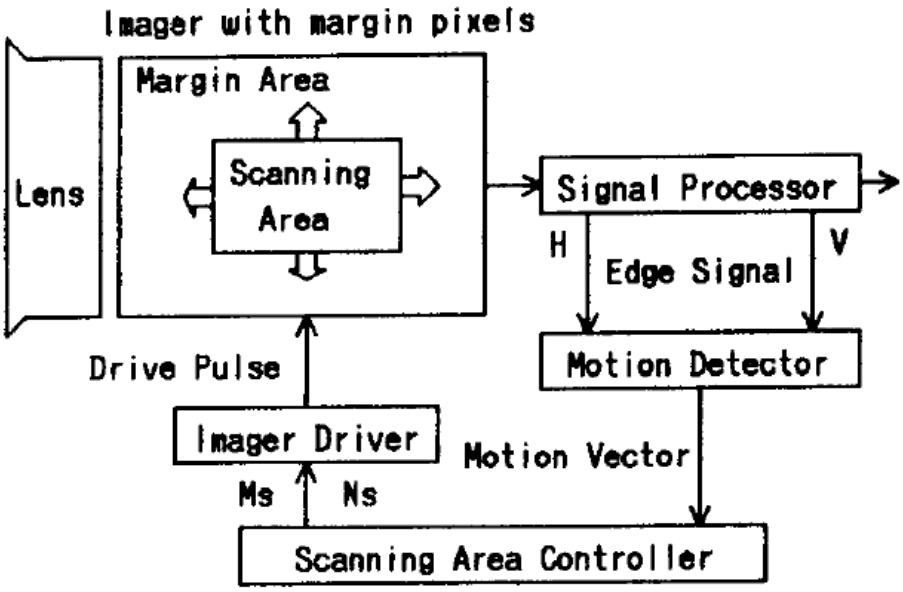

Fig.1 System Block Diagram

Ex-1016 (Kinugasa1), p.520.

54. Image stabilization technology was also prevalent and publicly available in patent literature. For example, U.S. Pat. No. 7,286,163, a patent filed before March 25, 2004, discusses the use of a mechanical lens to adjust images based

on detected movement of a camera. Ex-1017 (U.S. Pat. No. 7,286,163) (filed June 2, 2003) at Abstract ("[A] vibration sensor for sensing a vibration of a camera body, and a processor for making the driver move the mirror based on the sensed vibration. The mirror turns so as to cancel the vibration of the object image focused on the light receiving plane."), cl. 1 ("a controller for controlling the driving mechanism on a basis of the shake of the body of the image taking device detected by the shake detector, so that the at least one optical bending member is driven by the driving mechanism so as to cancel the shake of the image of the object formed on the light receiving surface").

55. Before March 25, 2004, gyroscopes were a common way to detect motion, in addition to accelerometers or other kinds of motion sensors that use piezoelectric sensors. *See, e.g.*, *id.*, 8:4-20, 9:36-42, Figs. 5A-5B.

56. As of the priority date, it was well-known to perform image processing tasks, including for video applications, on multiple processors (e.g., separate processor chips or a single chip with multiple processors) to enable parallel (and thus, faster) processing of such image processing tasks. *See, e.g.*, Ex-1018 (US Patent Pub. 2001/0041012), ¶¶17, 20, 21; Ex-1019 (U.S. Patent 7,274,390), 1:9-22, 1:54-67, 2:1-5, 4:6-18; Ex-1010 (U.S. Patent 5,881,272 (Balmer)), 2:30-37, 3:36-42, 30:2-14, 58:17-42, 60:49-52, 62:22-27, Figs. 1-2, 10, 53, 58.

B. Software-Based Motion Tracking

57. As early as the 1990s, motion detection units were used in video camera technology. For example, a motion detection unit could be "divided by two parts: *motion estimation part* and *motion decision part*." Ex-1020 (Paik), 522 (italics in original).

58. In the motion estimation part, for example, motion vectors were used in "motion estimation areas (MEAs)" of corresponding image areas. *Id.* The quality of a "motion vector [could] be further improved by using [a] luminance signal…in the horizontal direction and by using line interpolation in the vertical direction." *Id.*

Figure 1. Block diagram of a digital video camera with a digital image stabilization (DIS) system and a field memory (FM).

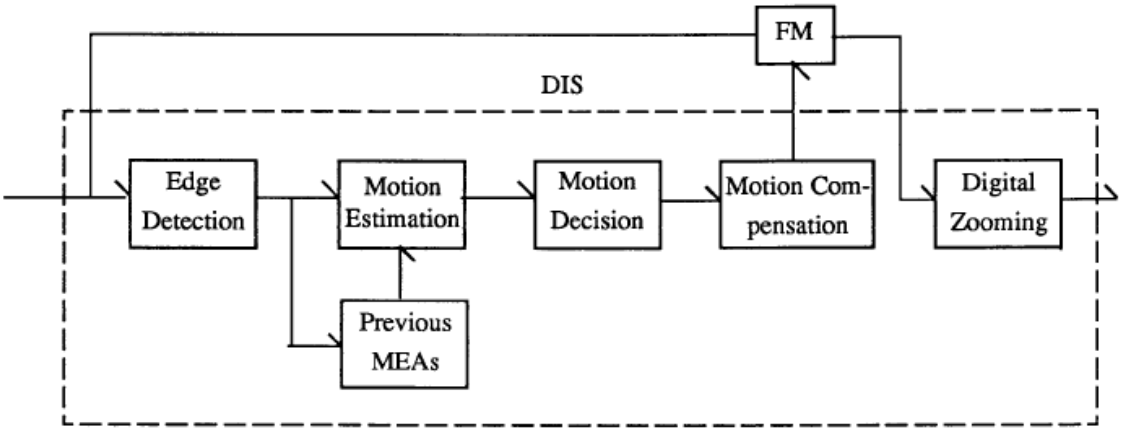

Figure 2. Block diagram of a digital image stabilization system.

Ex-1020 (Paik), Figs. 1-2, p. 525.

59. Paik teaches that "to compensate the motion of the compared image, we have moved it along the inverse direction of the motion vector obtained in the motion detection unit." *Id.*, 523. Thus, Paik confirms it was known to use software to detect the difference between image frames, determine a motion vector reflecting movement between those frames, and adjust the image an inverse amount to accommodate for that movement. *Id.*

C. Stabilization Based on User Input

60. As of March 25, 2004, cameras were generally powered with batteries, and a POSITA would have thus sought to conserve/maximize the battery life to maximize the operational use on a single battery charge. *See, e.g.*, Ex-1008 (Creative Camcorder), 11 (reflecting use of a battery).

61. A POSITA would have recognized that a user would want to conserve battery life where possible. *See, e.g.*, Ex-1011 (Hara), ¶55 (prescribing an amount of time that, once elapsed, will cause the device to enter a "terminating process" to "reduce battery consumption"), ¶109 (same); Ex-1043 (CIPA DC-002-Translation-2003, *Standard Procedure for Measuring Digital Still Camera Battery Consumption*, Standard of the Camera & Imaging Products Association (Dec. 17, 2003), https://www.cipa.jp/std/documents/download_e.html?DC-002_e), 4 ("For digital cameras, long battery life is one of the features regarded as important. However, until now, digital camera manufacturers have been measuring their

cameras' battery life using their own methods, making it difficult to compare the battery life performance data listed in manufacturers' catalogs. To cope with this inconvenience, the Camera & Imaging Products Association has defined this 'Procedure for Measuring Digital Still Camera Battery Consumption.' By specifying the standard measuring procedures for high power-consuming functions such as color image display activation, use of flash, and zoom and retractable lens movement, comparable data can be made available to help end-users make a selection from a variety of digital cameras."); Ex-1044 (*CIPA Standards*, Camera & Imaging Products Association, https://www.cipa.jp/e/std/std-sec.html) (providing download link for Ex-1043 and identifying publication date as 2003-12). Adding the ability to turn on/off image stabilization—or otherwise control the number of images that are recorded and stabilized—to a camera would have allowed the user to control battery consumption during image/video recording. For example, the user may notice that the camera battery is close to depletion and may turn off the image stabilization feature or reduce the number of images that are recorded and stabilized to avoid additional power consumption related to image stabilization. On the other hand, when the battery has sufficient charge, the user may be less concerned about battery depletion; thus, the user may decide to turn on the image stabilization feature

to capture stable images or videos or otherwise increase the number of images that are recorded and stabilized.

D. Stabilization and Lens Focal Length

62. As of March 25, 2004, it was well-known that the impact of camera motion/shake/jitter on image/video stability is directly impacted by the focal length of the lens (relative to a given image sensor size). *See, e.g.*, Ex-1021 (U.S. Patent 7,619,656), 1:45-49.

63. As the focal length becomes shorter, the impact of camera motion on the stability of the captured video is less pronounced and the resulting video is less unstable (as compared to a scenario where the focal length is longer).

64. Conversely, as the focal length becomes longer, the impact of camera motion on the stability of the captured video is more pronounced and the resulting video is more unstable (as compared to a scenario where the focal length is shorter).

65. Moreover, as discussed above for image stabilization, as of March 25, 2004, performing automated mechanical lens adjustments to stabilize images based on detected motion was well known. These devices operate by driving a lens to adjust its direction/zoom length based on detected motion, which automatically corrects for camera movement as images are captured. Ex-1017, Abstract, cl.1.

66. Similar techniques could be used to stabilize recorded videos. *See, e.g.*, Ex-1022 (U.S. Patent No. 6,263,162) (filed Aug. 20, 1999 and issued on Jul. 17,

2001 to Canon), 1:9-13, 4:59-7:60 (addressing "image shakes due to the vibration of the image pickup apparatus," "such as a small-sized video camera," by using an "image stabilizing unit 12" with a "shift lens," "Hall elements…serving as position detecting sensors," and "actuators" to drive the shift lens and eliminate detected shake).

E. Video Stabilization

67. Stabilizing videos with post-processing techniques was well known as of March 25, 2004. For instance, Gal's computer 108 is a post-processor that receives and processes unstabilized video to produce a stabilized output. Ex-1012 (Gal), 3:16-40, 4:27-45, 5:11-20.

FIG 3

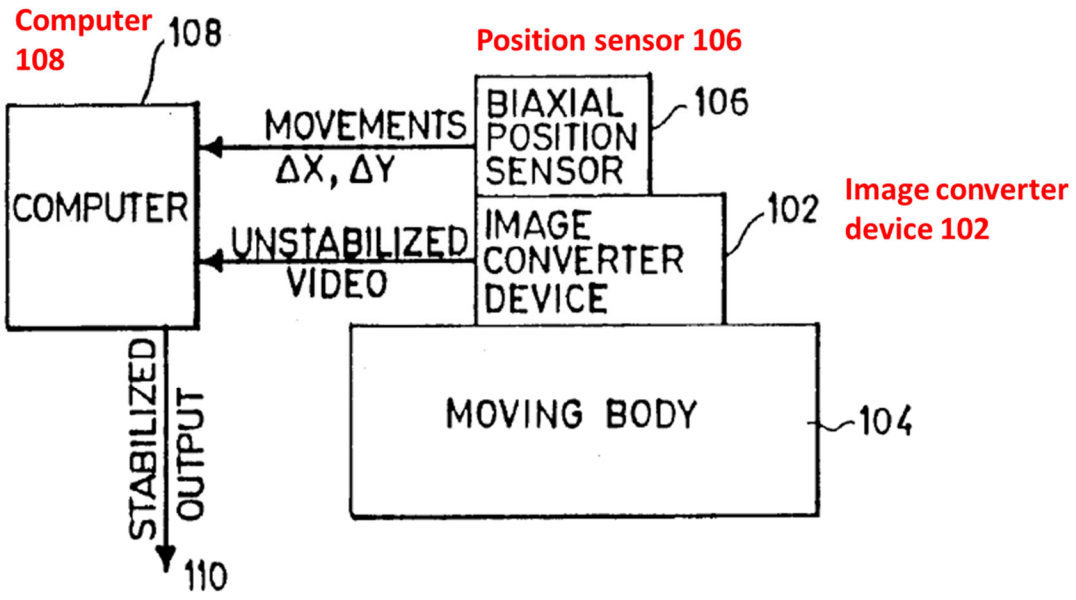

Ex-1012 (Gal), Fig. 3.[6]

68. Similarly, Kinugasa2 teaches the use of video pre/post processors. Ex-1023 (Kinugasa2), 776.

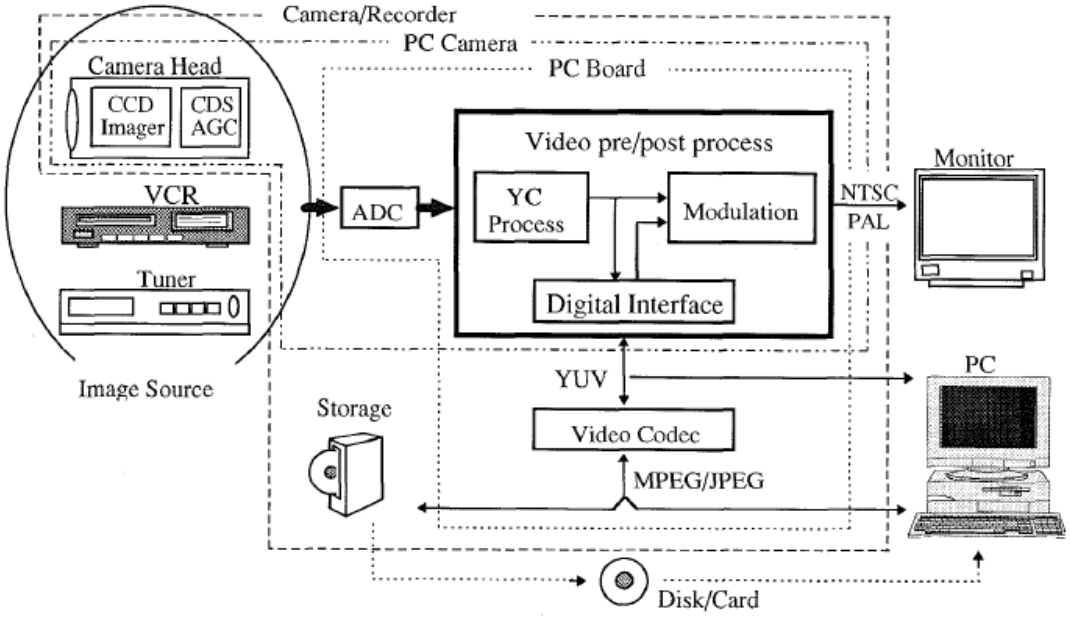

Figure 1 Video capture system

Kinugasa2 (Ex-1023), Fig. 1.

69. Such systems may include an algorithm for jitter compensation as shown below.

[6] All color annotations are added in this declaration unless otherwise noted.

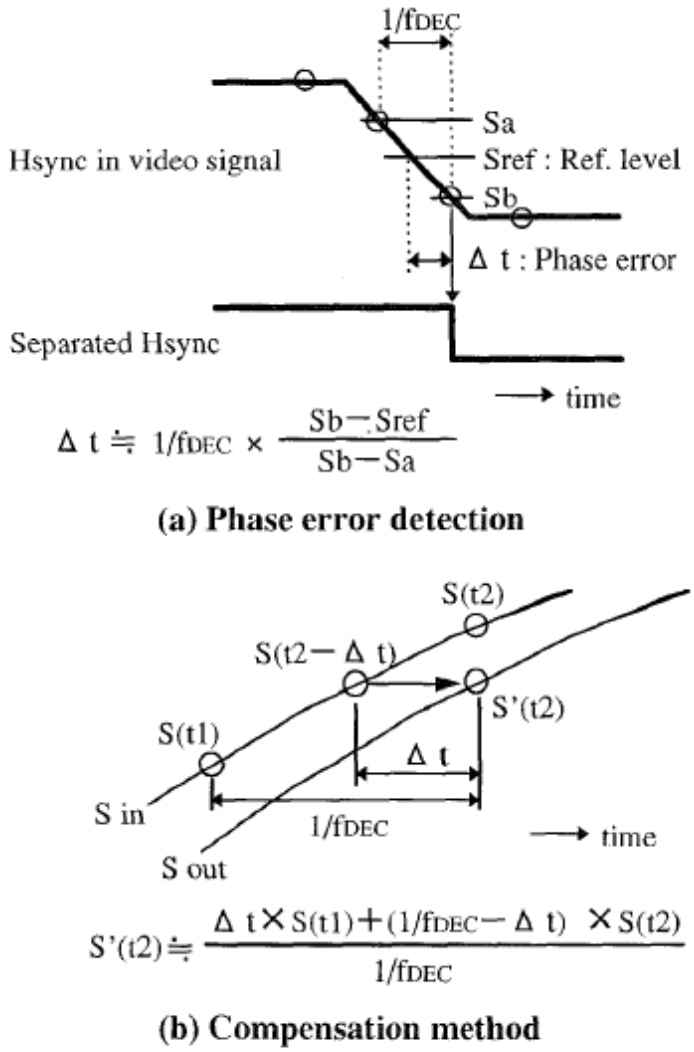

Figure 5 Jitter compensation

Kinugasa2 (Ex-1023), Fig. 5, p. 778.

F. Video Compression

70. Akifumi teaches that advances in video compression "in recent years" have permitted "video compression protocols with high compression ratios and low bit rates" to be performed for "long recordings [that] have now become possible even on semiconductor recording media." Ex-1009 (Akifumi), ¶5. As of March 25,

2004, recording devices were becoming more developed, such that they could store longer video recordings, and compression techniques for helping store those videos in a more efficient manner had similarly been developed such that it was easier to store longer recordings in handheld cameras.

G. Compact Camcorders

71. By the late 1980s, "the demand for an automatic image stabilization system for consumer use cameras [] increased" in the area of compact camcorders. Ex-1024 (Oshima2), p.749.

72. In the 1990s, "video cameras for consumer use exhibit[ed] certain changes such as: (1) compactness in size, (2) high zooming ratio, and (3) digitalization in video signal processing. (1) and (2) [made] it necessary for video cameras to have an image stabilizing system." Ex-1020 (Paik), 521; *see also* Ex-1009 (Akifumi), ¶5 ("In recent years there have been advances in technological developments for reducing data volumes through using technologies for digitizing image signals and compressing images…H.263 and MPEG-4, which is now coming into use in standard operations, are video compression protocols with high compression ratios and low bit rates, where long recordings have now become possible even on semiconductor recording media when recording using these systems.").

73. A 1990 article details a video camera control system describing "extending its dynamic range by acquiring contrast information of objects from CCD image signals and by controlling the camera system accordingly." Ex-1025 (Morimura), 866. The system is presented within the configuration of a video camera as shown below. *Id.*, p. 873.

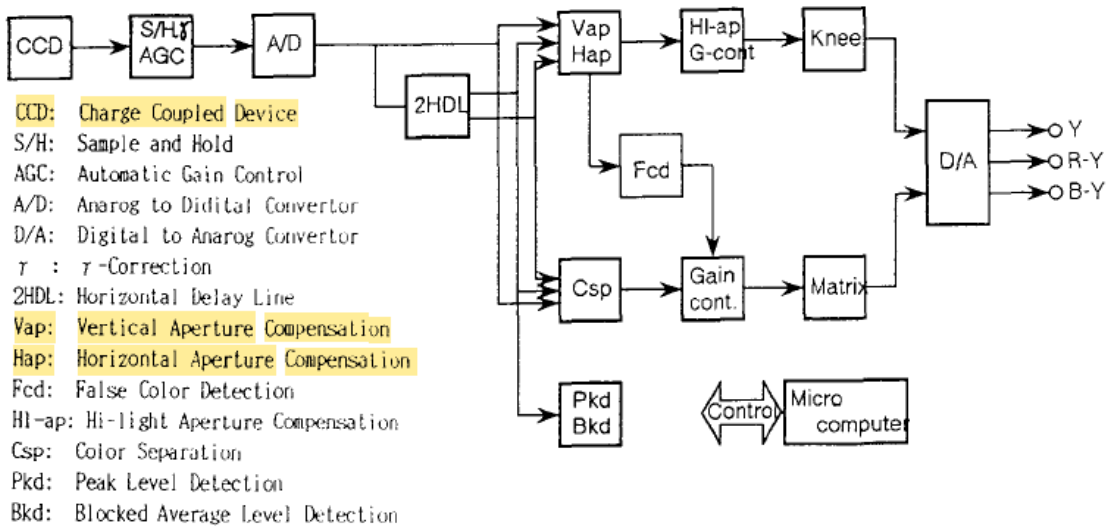

Fig. 10 Configuration of Video Camera

Ex-1025 (Morimura), Fig. 10.

74. The system also envisioned vertical and horizontal aperture compensation processing within the same device "for reducing noises and picture degradation." *Id.*, 872.

VIII. OVERVIEW OF THE ’450 PATENT

A. Specification

75. The ’450 patent relates to image and video stabilization and is titled “method and apparatus to correct digital video to counteract effect of camera shake.” ’450 patent (Ex-1001), Title. The specification explains that prior art cameras could compensate for detected movement using a movable lens, and ’450 Patent seeks to avoid this technique. *Id.*, 2:18-31.

76. The specification describes four principal embodiments related to correcting images. The specification discloses that “[t]he first two embodiments…correct blur in an image based on determining a transfer function that represents the motion of an imager while an image is being captured, and then correcting for the blur by making use of the ‘inverse’ transfer function.” *Id.*, 9:36-41.

77. The first embodiment uses motion sensors to determine the transfer function. *Id.*, 6:25-8:14, 9:41-43, Fig. 4. In the second embodiment, there are no motion sensors, and the transfer function is instead determined using blind estimation techniques. *Id.*, 8:16-9:35, 9:43-45, Fig. 5.

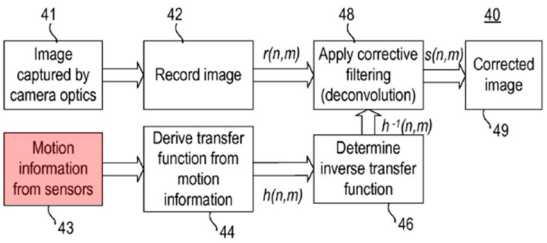

Figure 4

’450 patent (Ex-1001), Fig. 4.

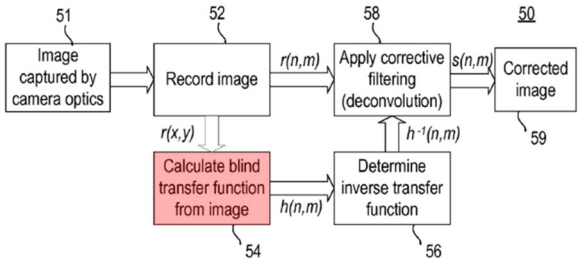

Figure 5

’450 patent (Ex-1001), Fig. 5.

78. The third embodiment captures multiple images and uses a motion sensor to determine how to align/combine the images’ pixel values to form a single image. *Id.*, 9:49-10:54.

79. The fourth embodiment relates to adjusting the position of the image sensor. *Id.*, 11:7-32.

80. None of the embodiments refer to video. However, the abstract—which was not included in the original priority documents—describes applying the alleged invention to video.[7] *Id.*, Abstract; *see also id.*, 11:54-62 (“[N]o distinction has been made between an imager that captures images one at a time, such as a digital camera,

[7] I understand that this title and abstract were not part of the original priority documents. On 11/30/2015, Applicant amended the title and abstract to refer to video during prosecution of the ’450 patent’s grandparent application. Ex-1003 (App. No. 14/690,818; U.S. Pat. No. 9,338,356), 96-107.

and one that captures sequence of images, such as digital or analog video recorders. A digital video recorder or similar device operates substantially the same way as a digital camera, with the addition of video compression techniques.”).

B. Prosecution History

81. I have reviewed the ’450 patent prosecution history and provide the summary below.

82. On February 13, 2017, the applicant filed the application leading to the issuance of the ’450 patent and claimed priority, through continuation applications, to a provisional application filed March 25, 2004. ’450 patent (Ex-1001), fields (22), (60), (63).

83. The application included 29 claims. ’450FH (Ex-1002), 20-25. Claims 1 and 15 were independent. *Id.*, 20, 22.

84. Original claim 1 corresponds to issued claim 1, and original claim 15 corresponds to issued claim 14. Original claims 1/15 were substantially similar to issued claims 1/14, except that the original claims did not recite storing the captured images in memory (as [1.1]/[14.1] require) and storing motion information in the memory synchronously with the storing of the images (as [1.2]/[14.2] require). *Id.*, 20 (original claim 1), 22-23 (original claim 15).

85. The original claim set included two claims depending from claim 1 that recited modifying the sequence of images using a video compression technique

(claim 11) and storing motion information in memory synchronously with a stored image (claim 12). *Id.*, 21-22; *see also id.*, 24 (original claims 25/26 depending from claim 15 and including substantially similar limitations as claims 11/12).

86. The Examiner initially issued a restriction requirement, stating that the claims related to "patentably distinct species of Figs. 4 and 5." '450FH, 124-27. The Examiner issued the restriction requirement notwithstanding the fact that the claims recited "motion sensors." *See* '450 patent (Ex-1001), 6:25-8:14 (disclosing that the Figure 4 embodiment uses motion sensors); 8:18-26 (disclosing regarding Figure 5 that "there are no motion sensors"). In response, the applicant "elect[ed] Figure 4." '450FH (Ex-1002), 139-40.

87. After this, the Examiner issued a non-final office action rejecting every claim over Dutta (Ex-1007) except for dependent claims 11/12 and 25/26. '450FH (Ex-1002), 146-50.

88. The Examiner's analysis focused on original claim 15 and its dependent claims, finding that Dutta disclosed all limitations except for the limitations of claims 25 and 26. *Id.*, 146-150. The Examiner also rejected claim 1 and its dependent claims, except for claims 11 and 12, for the same reasons. *Id.*, 150. The Examiner objected to claims 11/12 and 25/26, but the Examiner stated they would be "allowable if rewritten in independent form." *Id.*, 150.

89. The applicant conducted a telephonic interview with the Examiner. *Id.*, 166. The applicant then filed an amendment canceling claims 12/26 and amending claims 1/15 to require storing the captured images in memory (as issued [1.1]/[14.1] require) and storing motion information in the memory synchronously with the storing of the images (as issued [1.2]/[14.2] require). *Id.*, 183-89, 193 (explaining that the applicant "amended independent claims 1 and 15 to incorporate the allowable subject matter of claims 12 and 26, respectively").

90. The applicant also added independent claims 30 and 31 (corresponding to issued claims 28 and 29), which recite video compression. *Id.*, 190-91; *see also id.*, 193 (explaining that the applicant "added new independent claims 30 and 31[,] which include the subject matter indicated to be allowable in claims 11 and 25, respectively).

91. The applicant also added claims 32-34 (corresponding to issued claims 30-32), which recited similar subject matter to claims depending from claim 15 that the Examiner had previously rejected. *Id.*, 192.

92. The Examiner subsequently allowed all pending claims without providing reasons for allowance. *Id.*, 207 ("Claims 1-11, 13-25[,] and 27-34 are allowed.").

93. It therefore appears that the Examiner concluded during prosecution that Dutta (Ex-1007) disclosed substantially all limitations of issued claims 1-32 except for: (1) storing images and motion information synchronously in memory; and (2) applying a video compression technique to obtain a final video.

94. As I explain in this declaration, the Examiner's analysis overlooked Dutta's relevant teachings, both on its own and in combination with the references I discuss below.

C. Claims

95. The table below includes identifiers for the '450 patent claims and limitations, which I reference throughout this declaration.

Claim 1	
1[pre]	A method for use in an imaging device comprising an image sensor, a processor, a memory, and one or more motion sensors, the method comprising:
[1.1]	capturing a sequence of images with the image sensor, wherein the sequence of images comprise a video, and storing the images in the memory;
[1.2]	detecting, by the one or more motion sensors, motion information for one or more images of the sequence of images, wherein the motion information represents motion of the device during capturing of the one or more images of the sequence of images, and storing the motion information in the memory synchronously with the storing of the one or more images;
[1.3]	determining, by the processor, a vertical shift value and a horizontal shift value for one or more images of the sequence of images based at least in part on the motion information;

[1.4]	modifying, by the processor, one or more images of the sequence of images based at least in part on the vertical and the horizontal shift values;
[1.5]	combining, by the processor, the modified images to obtain a final video; and
[1.6]	storing the final video in the memory.
Claim 2	
2	The method of claim 1, wherein the processor determines the vertical and horizontal shift values for one or more images for which the motion information is detected.
Claim 3	
3	The method of claim 1, wherein the processor modifies one or more images for which the vertical and horizontal shift values are determined.
Claim 4	
4	The method of claim 1, wherein the processor modifies one or more images of the sequence of images such that effect of motion of the device during capturing of the one or more images of the sequence of images is reduced in the final video.
Claim 5	
5	The method of claim 1, wherein the processor determines a vertical shift value and a horizontal shift value for each image of the sequence of images.
Claim 6	
6	The method of claim 1, wherein the motion information represents motion of the device at time of capturing of one or more images of the sequence of images.
Claim 7	

7	The method of claim 1, wherein the one or more images of the sequence of images is at least two images, and wherein the motion information represents motion of the device between capturing of consecutive images.
Claim 8	
8	The method of claim 1, wherein the vertical and horizontal shift values for an image indicate how much the image is displaced due to motion of the device during capturing of the image.
Claim 9	
9	The method of claim 1, wherein the modifying by the processor of the one or more images of the sequence of images comprises shifting a reference point in each image according to the vertical shift value and the horizontal shift value for the image in a direction that reduces the effect of motion of the device in the final video.
Claim 10	
10	The method of claim 1, wherein the method further comprises displaying the final video in a user interface.
Claim 11	
11	The method of claim 1, wherein the method further comprises modifying the sequence of images using a video compression technique.
Claim 12	
12	The method of claim 1, wherein determining a vertical shift value and a horizontal shift value for one or more images of the sequence of images is based at least in part on the focal distance of a lens of the imaging device.
Claim 13	
13	The method of claim 1, wherein the method further comprises receiving user input in a user interface, and at least one of modifying one or more images of the sequential images or combining the modified images to obtain a final video is based at least in part on the user input.

Claim 14	
14[pre]	An imaging device, comprising:
[14.1]	an image sensor configured to capture a sequence of images, wherein the sequence of images comprise a video, and store the images in a memory;
[14.2]	one or more motion sensors configured to detect motion information for one or more images of the sequence of images, wherein the motion information represents motion of the imaging device during capturing of the one or more images of the sequence of images, and store the motion information in the memory synchronously with the storing of the one or more images; and
[14.3]	a processor configured to: determine a vertical shift value and a horizontal shift value for one or more images of the sequence of images based at least in part on the motion information;
[14.4]	[a processor configured to:] …modify one or more images of the sequence of images based at least in part on the vertical and the horizontal shift values; and
[14.5]	[a processor configured to:] …combine the modified images to obtain a final video; and
[14.6]	wherein the memory is further configured to store the final video.
Claim 15	
15	The imaging device of claim 14, wherein the processor is configured to determine the vertical and horizontal shift values for one or more images of the sequence of images for which the motion information is detected.
Claim 16	

16	The imaging device of claim 14, wherein the processor is configured to modify one or more images of the sequence of images for which the vertical and horizontal shift values are determined.
Claim 17	
17	The imaging device of claim 14, wherein the processor is configured to modify one or more images of the sequence of images such that effect of motion of the device during capturing of the one or more images of the sequence of images is reduced in the final video.
Claim 18	
18	The imaging device of claim 14, wherein the processor is configured to determine a vertical shift value and a horizontal shift value for each of the images of the sequence of images.
Claim 19	
19	The imaging device of claim 14, wherein the motion information detected by the one or more motion sensors represents motion of the device at time of capturing of one or more images of the sequence of images.
Claim 20	
20	The imaging device of claim 14, wherein the one or more images of the sequence of images is at least two images, and wherein the motion information detected by the one or more motion sensors represents motion of the device between capturing of consecutive images.
Claim 21	
21	The imaging device of claim 14, wherein the processor is configured to determine a vertical shift value and a horizontal shift value for an image such that the vertical shift value and the horizontal shift value indicate how much the image is displaced due to motion of the device during capturing of the image.

Claim 22	
22	The imaging device of claim 14, wherein the processor is configured to modify one or more images of the sequence of images by shifting a reference point in each image according to the vertical shift value and the horizontal shift value for the image in a direction that reduces the effect of motion of the device in the final video.
Claim 23	
23	The imaging device of claim 14, wherein the device further comprises a display configured to display the final video.
Claim 24	
24	The imaging device of claim 14, wherein the processor is further configured to modify the sequence of images using a video compression technique.
Claim 25	
25	The imaging device of claim 14, wherein the processor is configured to determine a vertical shift value and a horizontal shift value for one or more images of the sequence of images based at least in part on the focal distance of a lens of the imaging device.
Claim 26	
26	The imaging device of claim 14, wherein the device further comprises a display configured to receive user input, and the device is configured to modify one or more images of the sequential images and to obtain a final video based at least in part on the user input.
Claim 27	
27	The imaging device of claim 14, wherein the processor is two or more processors.
Claim 28	
28[pre]	A method for use in an imaging device comprising an image sensor, a processor, a memory, and one or more motion sensors, the method comprising:

[28.1]	capturing a sequence of images with the image sensor, wherein the sequence of images comprise a video;
[28.2]	detecting, by the one or more motion sensors, motion information for one or more images of the sequence of images, wherein the motion information represents motion of the device during capturing of the one or more images of the sequence of images;
[28.3]	determining, by the processor, a vertical shift value and a horizontal shift value for one or more images of the sequence of images based at least in part on the motion information;
[28.4]	modifying, by the processor, one or more images of the sequence of images based at least in part on the vertical and the horizontal shift values;
[28.5]	combining, by the processor, the modified images, and applying a video compression technique to obtain a final video; and
[28.6]	storing the final video in the memory.
Claim 29	
29[pre]	An imaging device, comprising:
[29.1]	an image sensor configured to capture a sequence of images, wherein the sequence of images comprise a video;
[29.2]	one or more motion sensors configured to detect motion information for one or more images of the sequence of images, wherein the motion information represents motion of the imaging device during capturing of the one or more images of the sequence of images;
[29.3]	a processor configured to: determine a vertical shift value and a horizontal shift value for one or more images of the sequence of images based at least in part on the motion information;
[29.4]	[a processor configured to:] …modify one or more images of the sequence of images based at least in part on the vertical and the horizontal shift values; and

[29.5]	[a processor configured to:] …combine the modified images, and apply a video compression technique to obtain a final video; and
[29.6]	a memory configured to store the final video.
Claim 30	
30	The imaging device of claim 29, wherein the one or more images of the sequence of images is at least two images, and wherein the motion information detected by the one or more motion sensors represents motion of the device between capturing of consecutive images.
Claim 31	
31	The imaging device of claim 29, wherein the processor is configured to determine a vertical shift value and a horizontal shift value for one or more images of the sequence of images based at least in part on the focal distance of a lens of the imaging device.
Claim 32	
32	The imaging device of claim 29, wherein the device further comprises a display configured to receive user input, and the device is configured to modify one or more images of the sequential images and to obtain a final video based at least in part on the user input.

IX. PRIOR PROCEEDINGS

96. I understand that in 2020, Samsung filed a petition for IPR of all ’450 patent claims. *Samsung Elecs. Co. v. Clear Imaging Rsch. LLC*, IPR2020-01394, Paper 2 (July 31, 2020). I further understand that on February 12, 2021, the Board exercised discretion to deny institution under *Fintiv* and did not substantively address the merits. *Id.*, Paper 13, 23 (Feb. 12, 2021) (“Based on the limited record before us, we find that the merits do not outweigh the other *Fintiv* factors.”).

97. Thus, I understand that the Board has not previously reached the merits in a prior ’450 patent IPR.

98. I also understand that in 2019, Patent Owner Clear Imaging Research LLC (“Patent Owner”) sued Samsung in district court, alleging infringement of the ’450 patent (among others). Ex-1028 (showing complaint filed Oct. 1, 2019).

99. I understand that a *Markman* hearing was held on October 14, 2020 before Magistrate Judge Roy Payne, and a subsequent *Markman* order held all ’450 patent terms at issue had their plain and ordinary meaning without the need for further construction. Ex-1029; Ex-1030. I understand that the case settled before trial, and Judge Gilstrap did not rule on any dispositive motions before the case was dismissed on May 18, 2021. Ex-1028, Dkts. 306-09.

100. I also understand that Patent Owner filed another suit against Apple Inc. asserting the ’450 patent more than two years later, and the case was dismissed with prejudice on August 15, 2023 before an answer was filed following a settlement. Ex-1031 (showing complaint filed April 14, 2023 and case dismissed August 15, 2023).

101. I understand that, in 2025, Patent Owner then filed litigations against Google and Lenovo. Ex-1032 (Google litigation); Ex-1033 (Lenovo litigation). I understand that, on January 28, 2026, the parties in the Google litigation filed a joint motion to dismiss with prejudice Patent Owner’s claims for infringement of the ’450

patent as well as Google's counterclaims for declaratory judgment of non-infringement and invalidity of the '450 patent without prejudice.

X. CLAIM CONSTRUCTION

A. Means-Plus-Function

102. I understand that a District Court determined that the "processor…configured to…" terms in claims 14, 25, 29, and 31 "are not governed by § 112, ¶ 6 and…have their plain and ordinary meanings without the need for further construction." Ex-1029, 13-17; Ex-1030, 1.

103. I further understand that the Court also determined that "a display configured to receive user input" in claims 26 and 32 "is not governed by § 112, ¶ 6" and "has its plain and ordinary meaning without the need for further construction." Ex-1029, 20-22; Ex-1030, 1.

104. Here, no challenged claims use the term "means." Therefore, I understand that there is a rebuttable presumption they are not means-plus-function.

105. If the Office finds the presumption is overcome for the "processor" terms, I have identified corresponding structure in the specification for these terms below.

106. If the Office finds the presumption is overcome for the "display"/"user interface" terms, I have identified corresponding structure for these terms below.

1. "a processor configured to..."/"…by the processor…" (claims 1-9, 11-22, 24-32)

107. If the Office finds the presumption is overcome, it is my opinion that the functions are as recited in the claims, and the only disclosed corresponding structure is an integrated circuit or processor(s), or the combination of the two. '450 patent (Ex-1001), 12:2-5.

108. I understand that Google previously proposed in litigation that the "processor" terms are means-plus-function terms, the corresponding structure I identified above is insufficient for failure to disclose an algorithm, and, therefore, the "processor" terms are indefinite. Ex-1026; Ex-1027. In this declaration, I am not offering opinions regarding whether the terms are means-plus-function or regarding the sufficiency of the disclosed structure because these opinions are unnecessary for my analysis. In other words, if the Office finds that the "processor" terms are means-plus-function terms, it is my opinion that a POSITA would have understood that the asserted prior art satisfies the limitations by performing the claimed functions with the only disclosed corresponding structure in the '450 patent (i.e., an integrated circuit or processor(s), or the combination of the two). Further, as I explain below, the same disclosures in the prior art disclose the "processor" terms under the terms' ordinary meaning.

2. "display"/"user interface" (claims 10, 13, 23, 26 and 32)

109. If the Office finds the presumption is overcome, it is my opinion that the only disclosed corresponding structure is a viewfinder/display. '450 patent (Ex-1001), 11:3-6.

B. Other Claim Constructions

110. If the Office does not find the presumption against applying means-plus-function is overcome for the "processor" or "display"/"user interface" terms, I have also applied the terms' ordinary meanings as understood by a POSITA. In other words, in my opinion the same disclosures in the prior art identified in this declaration disclose the "processor" and "display"/"user interface" terms under both the means-plus-function constructions and the terms' ordinary meanings.

111. For all other terms, I have applied their ordinary meanings as understood by a POSITA. If the '450 patent specification or the file history of the '450 patent informs certain terms' ordinary meanings, I have addressed this in my analysis below. I also reserve the right to respond to Board constructions or constructions offered by Patent Owner.

XI. GROUNDS 1A, 1B, and 1C

A. 1A: Dutta (Ex-1007) and Akifumi (Ex-1009) (Claims 1-26 and 28-32)

1. Dutta (Ex-1007)

112. Dutta discloses "[a] method and handheld device for scanning an object and creating a complete image of the object, even under low light conditions." Dutta (Ex-1007), Abstract. "The handheld device is moved so that the camera module takes a plurality of images of an object." *Id.* "A motion sensor assembly in the handheld device detects motion of the handheld device[,] and movement information from the motion sensor assembly is used to modify each of the plurality of images to remove distortions therein caused by movement of the camera module." *Id.* Following this, "[t]he plurality of images are combined to generate a reconstructed image of the object." *Id.* "[T]he final image may then be viewed locally or remotely or further processed." *Id.*, ¶6.

113. It is my opinion that a POSITA would have readily recognized that Dutta's disclosures regarding motion correcting images were applicable to forming a video (which is a sequence of images). Indeed, this is consistent with the Examiner's determination during prosecution and the '450 patent specification.'450FH (Ex-1002), 146-50 (Examiner determining that Dutta disclosed video-related limitations); '450 patent (Ex-1001), 11:54-62 ("[N]o

distinction has been made between an imager that captures images one at a time, such as a digital camera, and one that captures sequence of images, such as digital or analog video recorders. A digital video recorder or similar device operates substantially the same way as a digital camera, with the addition of video compression techniques.”).

114. Figure 1 of Dutta illustrates the handheld device 100, which may be a mobile phone or a dedicated imaging device, and Figure 2 illustrates the device’s micro camera module 204. Dutta (Ex-1007), ¶¶15-16, 30.

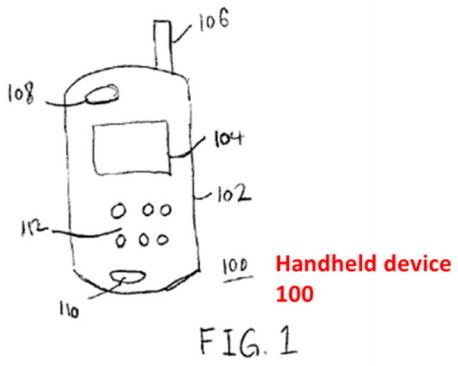

Dutta (Ex-1007), Fig. 1.

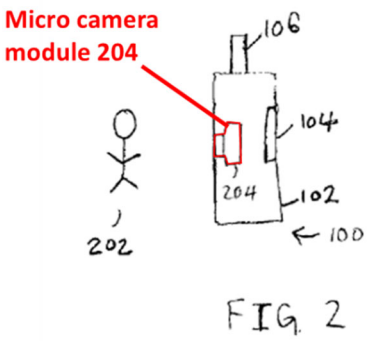

Dutta (Ex-1007), Fig. 2.

115. The handheld device “is configured to transmit information in the form of text, voice, images, audio, video[,] and the like” and includes a keyboard 112 and a display 104. Dutta (Ex-1007), ¶15. The “keyboard 112 comprises one or more buttons or switches to facilitate the operation of the handheld device 100.” *Id.* The buttons may “power on and off the handheld device 100” and “activate specific features of the handheld device 100.” *Id.* The “display 104 is configured to display

any form of textual, image[,] and video information." *Id.* "Micro camera module 204 is configured to focus onto and capture an image of an object 202." *Id.*, ¶16.

116. Figure 3 of Dutta is a block diagram of the handheld device 100 and illustrates additional components in more detail. *Id.*, ¶17.

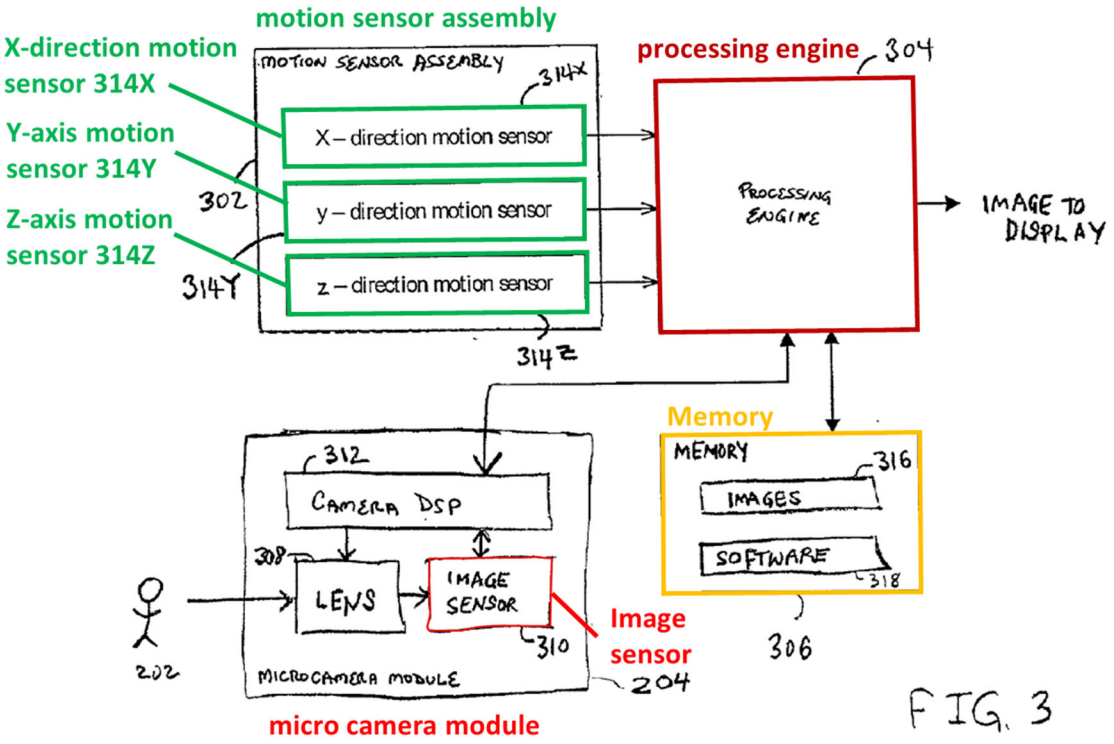

Dutta (Ex-1007), Fig. 3.

117. In addition to the micro camera module 204, the device includes "a motion sensor assembly 302, a processing engine 304, and a memory 306." *Id.*, ¶17. "The micro camera module 204 has components that comprise a miniature electronic camera, including, for example, an optical lens assembly 308, an image sensor 310, and a camera digital signal processor (DSP) 312." *Id.*

118. "The image sensor 310 defines or captures a focused image of an object 202 transmitted from the lens assembly 308 and generates an appropriate electrical signal corresponding to the captured image." *Id.*, ¶18. The image sensor 310 may be, for example, "a CCD (charge-coupled device)" or "a CMOS-based IC (integrated circuit)." *Id.* "The camera DSP 312…generates an electronic signal in response [to a] signal from the image sensor 310 and transmits this signal through the processing engine 304, and[,] after appropriate processing in the processing engine 304, to the display 104[,] which displays a visible image of the object." *Id.*

119. "The motion sensor assembly 302 senses movement of the handheld device 100." *Id.*, ¶20. "The motion sensor assembly 302 comprises one or more motion sensors that preferably sense movement of the handheld device 100 in at least two, and preferably three, substantially perpendicular directions." *Id.*

120. Dutta discloses that "[a]ny type of motion sensor maybe used, such as MEMS (micro-electro mechanical systems) sensors, electronic motion sensors, and the like." *Id.*; *see also id.* (disclosing that there are "two types of motion sensors, accelerometers which detect and measure linear acceleration, and gyroscopes, which detect and measure angular rotation"). In the preferred embodiment illustrated in Figure 3, "the motion sensor assembly 302 is a three-axis linear motion sensor comprising a X-direction motion sensor 314X, a Y-axis motion sensor 314Y, and a

Z-axis motion sensor 314Z." *Id.* This allows the motion sensor assembly 302 "to measure motion of the handheld device 100 in three dimensions." *Id.*

121. "The processing engine 304 coordinates the actions of the micro camera module 204, access to the memory 306, and processes the images obtained in accordance with measurements taken by the motion sensors 314X, 314Y, 314Z for ultimate display by the display (which may be integral to the handheld device or remote therefrom), for storage in a local or remote database, or for transmittal elsewhere, all of which are discussed in more detail below." *Id.*, ¶21.

122. Dutta discloses that "[a] suitable processing engine would include some kind of central processing unit capable of processing data and software programs." *Id.*

123. "The memory 306 stores images 316 captured by the camera module 204 and/or calibration images, and contains appropriate software 318 required for the operation of the various components of the device and for processing the images in response to the measurements obtained by the motion sensor assembly 302." *Id.*, ¶22. "The images 316 comprise images generated from the camera DSP 312 and used to generate a scanned or brightened image." *Id.*

124. Figure 4 of Dutta "shows the basic process steps" of Dutta's process. *Id.*, ¶23.

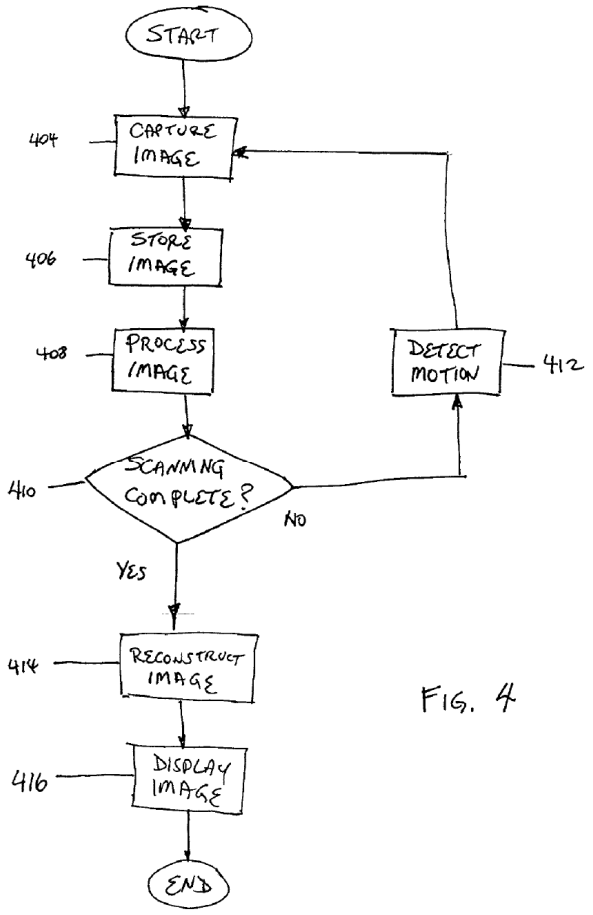

Dutta (Ex-1007), Fig. 4.

125. In step 404, "after the device has been activated, an image of an object is obtained by focusing the lens and capturing an image with the image sensor." *Id.*, ¶23.

126. In step 406, "[t]he scanned image of the object is stored in memory for further processing and/or display." *Id.* "The stored image is then processed in accordance with instructions received from the processing engine." *Id.* If this is the first image, "there may be no processing." *Id.*

127. However, in step 408, "[i]f the image is a second or subsequent image, the image is processed…in accordance with information gathered by the device including detected motion and/or brightness of the obtained image." *Id.* "For example, the detected motion of the handheld device is used to correct the position, orientation[,] and size of the image." *Id.*

128. In step 410, "[i]t is then determined whether the processing of the object is complete." *Id.* This "determination may be made automatically, such as by taking another image and determining whether the image contains any objects, or manually, such as ascertaining whether the user has entered an instruction with the keyboard that no new images are to be taken." *Id.*

129. In step 412, "[i]f additional images are to be taken, motion of the handheld device is measured…, and this information is transmitted to the processing engine for subsequent image processing." *Id.*

130. Then, in step 404, "[a]n additional image is…obtained…, and the process continues until all image acquisition is done." *Id.*

131. In step 414, "[i]f no more images are to be acquired, an entire image of the object is reconstructed based upon the previously acquired and processed images." *Id.*

132. Once the image is reconstructed, in step 416, it "is then displayed on the display of the handheld device, transmitted to a separate display connected to the handheld device (either through a local wire connection to a local display or through a connection through a network or through the internet to a remote display), or transmitted wirelessly to a local or remote display device or storage medium." *Id.*

133. Dutta also discloses that "[a]lternatively, or in addition, the reconstructed image may be stored locally or remotely as an image or converted from an image into text, etc., by an optical character recognition (OCR) program." *Id.*

134. Dutta further discloses that "[a]lthough the various steps are described as occurring one after the other, alternatively, and preferably, many of the steps can be performed simultaneously in parallel with respect to capturing and/or processing successive images of the object." *Id.*, ¶24.

135. Regarding Figure 5, Dutta discloses an example of the invention where "the object 202 comprises a line of alphabet letters 502." *Id.*, ¶25. "[T]he object 202 may alternatively comprise a three-dimensional object." *Id.*; *see also id.*, ¶¶26-27 (describing the steps of Figure 5).

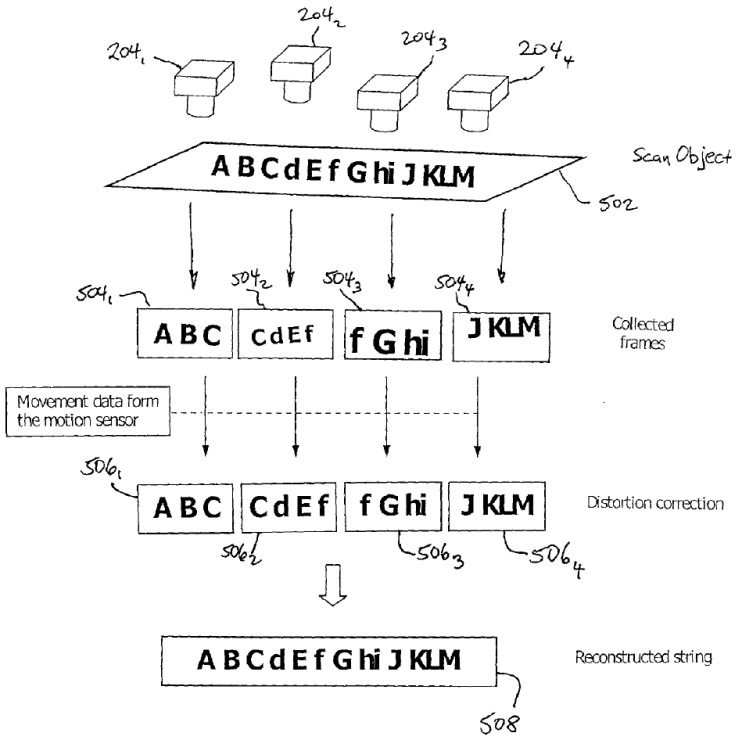

FIG. 5

Dutta (Ex-1007), Fig. 5.

136. Regarding Figure 6, Dutta discloses another example of the invention where "the object 202 comprises a three-dimensional object, in this case a person." *Id.*, ¶28; *see also id.* (describing steps of Figure 6).

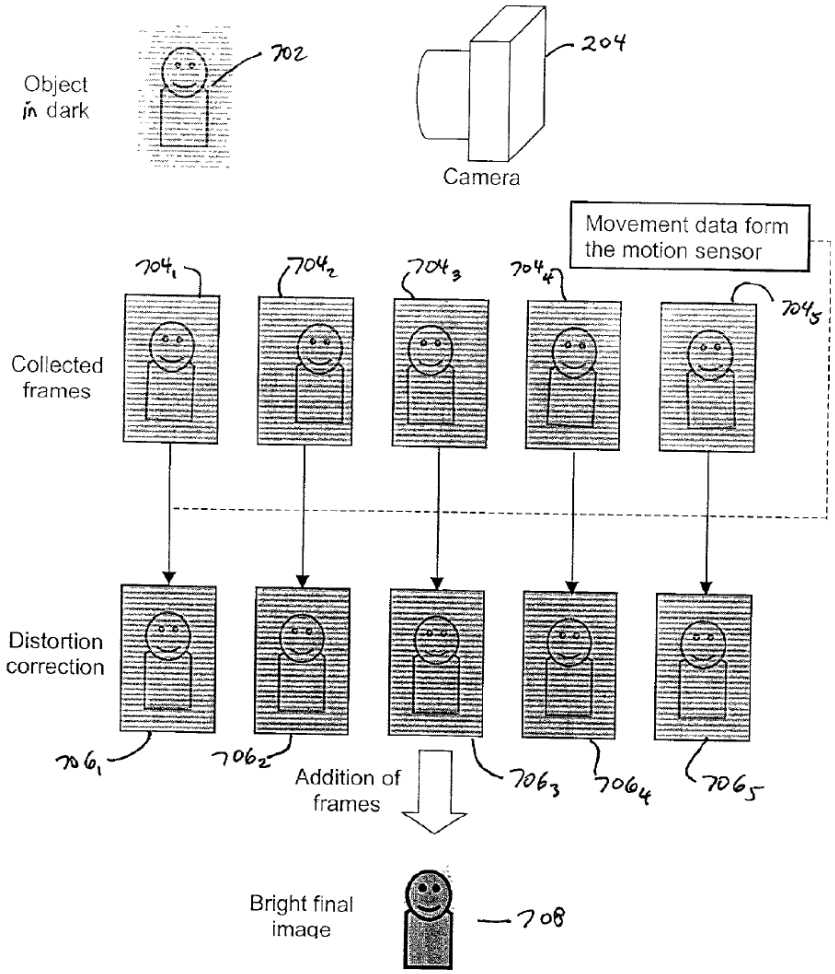

FIG. 6

Dutta (Ex-1007), Fig. 6.

137. Dutta further discloses that "[s]ubstitutions of elements from one described embodiment to another are also fully intended and contemplated." *Id.*, ¶31.

2. Akifumi (Ex-1009)

138. Akifumi "relates to an image inputting device that uses a solid-state imaging element, and, in particular, relates to shaking correction." Akifumi (Ex-1009), ¶1.

139. Akifumi discloses that prior art image inputting devices include "electronic camera systems that record still images" and "video cameras that record video." *Id.*, ¶2. Akifumi further discloses that "[v]ideo cameras that have shaking correction functions in order to avoid image degradation caused by shaking have become technologically feasible." *Id.*

140. Akifumi explains that known techniques for shaking detection/correction include electronic correction techniques (acceleration sensor/comparing imaging element output to the previous frame) and optical correction techniques. *Id.*, ¶¶3-4.

141. As to electronic techniques, Akifumi explains that if an imaging element is used that has more pixels than the normal effective pixel count, corrections can be applied by either varying the position read out from the imaging element itself or, if the image signal is temporarily stored in frame memory, varying the position read out from the frame memory. *Id.*, ¶3.

142. Akifumi then explains that, in recent years, there have been technological developments for reducing data volumes through

digitizing/compressing images, including for video applications, and that there may be applications where the recording frame rate is lower than the frame rate at which the image signal is outputted. *Id.*, ¶¶5-13. In these situations, Akifumi explains that "it is not necessary to carry out the shaking correction on all of the frames in the image signal that is outputted from the imaging element." *Id.*, ¶10.

143. Akifumi's invention addresses this issue by proposing that "the interval for calculating the shaking correction value is varied depending on the recording frame rate." *Id.*, ¶16. For example, if the recording frame rate and the input frame rate are both 30 frames per second, "then the shaking correction value is calculated over an interval of 1/30 seconds, and the shaking correction value is outputted to the shaking correcting portion 30 times per second." *Id.,* ¶22.

144. If, however, "the recording frame rate were less than the inputting frame rate for the image signal," e.g., "10 frames per second, then the shaking correction value would be calculated over 1/10 seconds, and the shaking correction value would be outputted to the shaking correcting portion 10 times per second." *Id.* "This enables effective shaking control, regardless of the recording frame rate." *Id.*

145. Akifumi describes thirteen "embodiments" of the invention with respect to Figures 1-23. *Id.*, ¶¶27-85.

146. Akifumi uses the same numbering to describe components that are common to multiple embodiments. As such, it is my opinion that a POSITA would have understood that teachings regarding a component in the context of one embodiment were applicable to other embodiments including that component.

147. Further, it is my opinion that a POSITA would have understood that teachings of the "embodiments" were intended to be combined according to design needs.

148. First Embodiment (Figs. 1-5) (*id.*, ¶¶27-40): Figure 1 illustrates "the structure of an image inputting device..." *Id.*, ¶27. The "image inputting device 10 comprises: an imaging lens 11, an imaging portion 12 that is structured using a solid-state imaging element; an A/D converter 13; a signal processing portion 14; a video compressing portion 15; a data recording portion 16; a shaking sensor 17; a shaking correction value calculating portion 18; and a controlling portion 19." *Id.*

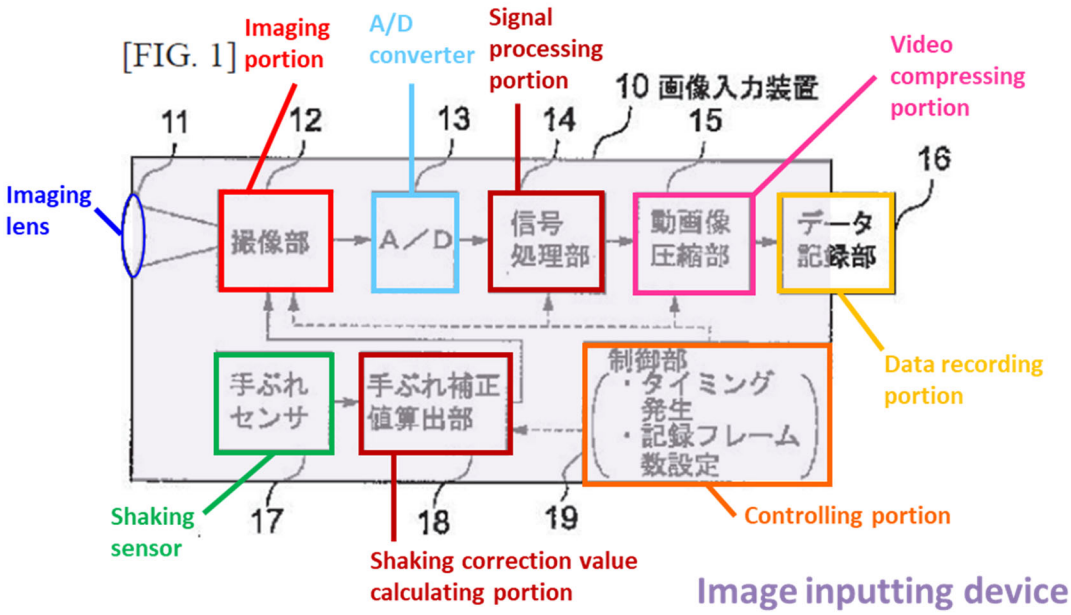

Akifumi (Ex-1009), Fig. 1.

149. "The shaking sensor 17 is a sensor for detecting shaking of the user who is holding the image inputting device 10, and is structured from, for example, acceleration sensors that can detect acceleration in the vertical direction and in the horizontal direction due to shaking. The shaking detection output from the shaking sensor 17 is inputted into the shaking correction value calculating portion 18, where the required shaking correction value is calculated. This shaking correction value is calculated and outputted in accordance with the setting for the recording frame rate when video data is recorded by the data recording portion 16." *Id.*, ¶32.

150. Based on the correction value, Akifumi performs a shake correction by changing the position "read out" from imaging element 12 or—when the image is

temporarily stored in frame memory 20 as in the second and fifth embodiments I describe below—from frame memory. *Id.*, ¶¶34, 41-43.

151. Akifumi also describes examples of the invention when the recording frame rate:

(a) matches the image output frame rate (30 frames per second) (such that all frames are recorded);

(b) is 1/3 the output frame rate; and

(c) is 1/6 the output frame rate.

Id., ¶31, Figs. 2(a), (b), (c).

152. Akifumi further describes an example of the structure of a CCD imaging element (*id.*, ¶33, Fig. 3) and shake correction timing details when the recording frame rate is 30 frames per second and 10 frames per second. *Id.*, ¶¶35-40, Figs. 4(a)/(b)/(c), Figs. 5(a)/(b)/(c).

153. I note that a key aspect of Akifumi's invention is that it still provides the flexibility to perform motion correction on all images. *See, e.g.*, *id.*, ¶37 ("In this case, the frame rate of the image signal that is outputted from the imaging portion 12 and the recording frame rate in the data recording portion 16 are identical, and thus shaking correction is carried out on the entire image signal that is outputted from the imaging portion 12.").

154. Second Embodiment (Figs. 6-7) (*id.*, ¶¶41-46): Figure 6 illustrates an image inputting device using "identical reference symbols" for identical parts identified in Figure 1. *Id.*, ¶41.

155. In this embodiment, "frame memory 20 is added between the A/D converter 13 and the signal processing portion 14…" *Id.*

156. Unlike the first embodiment, "the image signal for all pixels is written to the frame memory 20…, and a system is used where the position for reading out is varied depending on the shaking correction value from the shaking correction value calculating portion 18." *Id.*

[FIG. 6]

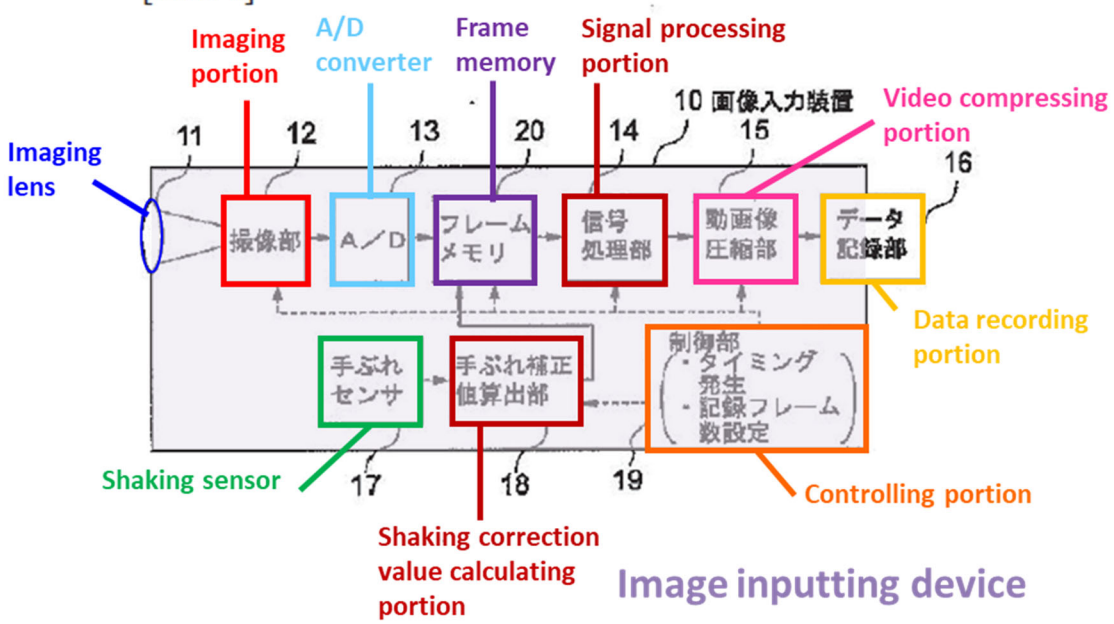

Akifumi (Ex-1009), Fig. 6.

157. Akifumi also describes shaking correction operation and timing when frame memory is used and the imaging element is either a CCD or MOS imaging element. *Id.*, ¶¶42-47, Figs. 7(a)-(h).

158. Third Embodiment (Figs. 8-9) (*id.*, ¶¶47-54): Figures 8-9 describe details of Akifumi's invention related to a MOS imaging element and electronic shutter functionality. *Id.*, ¶¶47-54.

159. Fourth Embodiment (Fig. 10) (*id.*, ¶¶55-58): Figures 10(a)-(b) illustrate another embodiment having a structure that replaces controlling portion 19 with "controlling portion 21," which has a timing generating and recording resolution setting function. *Id.*, ¶55.

160. In this embodiment, the user is able to select the recording pixel count, which automatically sets the recording frame rate without the user "having to think about the recording frame rate." *Id.*, ¶57.

161. Fifth Embodiment (Figs. 11(a)-(b)) (*id.*, ¶59): Figures 11(a)-(b) illustrate an alternative embodiment "where a monitoring portion 22 is provided in the image inputting device 10." *Id.*

162. "That is, the image data that is recorded by the data recording portion 16 is decompressed by the video decompressing function (local decoding function) of the video compressing portion 15, and played back on built-in monitoring

portion." *Id.* Figure 11(b) includes frame memory 20, whereas Figure 11(a) does not. *Id.* Figure 11(b) is below.

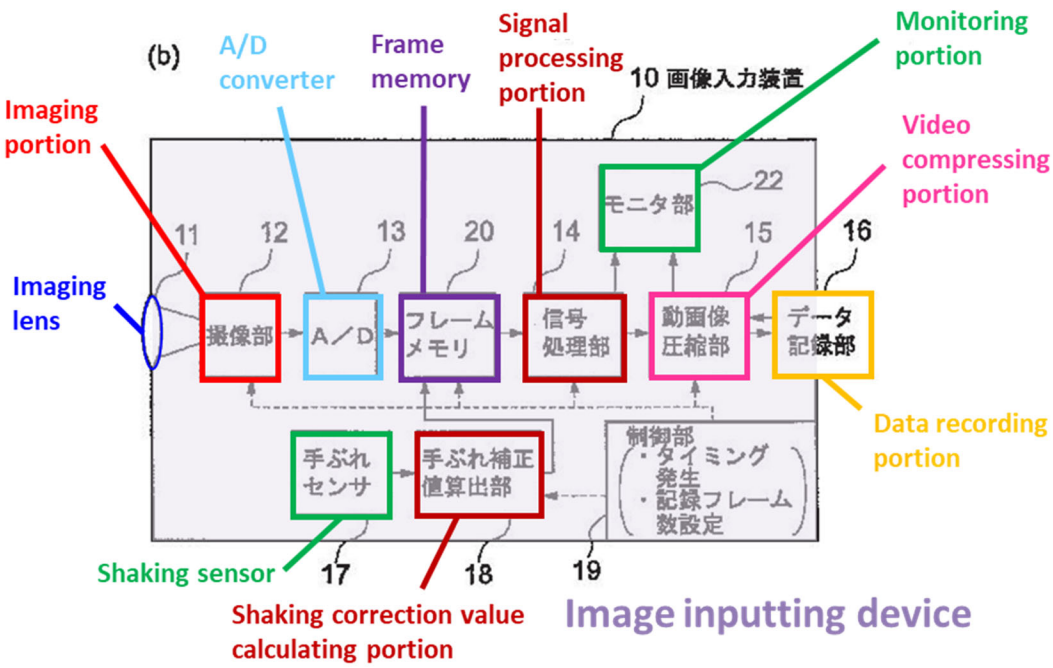

Akifumi (Ex-1009), Fig. 11(b).

163. Sixth Embodiment (Figs. 12(a)-b)) (*id.*, ¶¶60-62): Figures 12(a)-(b) replace video compressing portion 15 with still image/video compressing portion 23. *Id.*, ¶¶60-62.

164. Seventh Embodiment (Figs. 13(a)-(b)) (*id.*, ¶¶63-64): Figures 13(a)-(b) disclose an image inputting device that is substantially similar to the earlier embodiments I described, except that it also includes an interface 25 and external connection cable 26 to connect to a personal computer. *Id.*, ¶¶63-64.

165. Eighth Embodiment (Fig. 14) (*id.*, ¶¶65-68): Figure 14 discloses using motion vectors generated by video compressing 15 (or still image/video compressing portion 23) to improve shake correction accuracy. *Id.*, ¶65.

166. Ninth Embodiment (Fig. 15) (*id.*, ¶69): Akifumi's ninth embodiment discloses a shaking correction value calculating portion that, in addition to the structure of Figure 14, references "zoom lens data and focus data, or supplementary data such as data on the distance to the imaging subject" to calculate the shake correction value, "thereby further improving the accuracy of the shaking correction." *Id.*

167. Tenth Embodiment (Figs. 16-17) (*id.*, ¶¶70-75): Akifumi's tenth embodiment discloses details for applying the invention to a MOS imaging element when the shaking correction value is inputted into the imaging element. *Id.*, ¶¶70-71. This involves, among other things, shaking correction values that include "vertical direction and horizontal direction shift magnitudes." *Id.*, ¶72.

168. Eleventh/Twelfth/Thirteenth Embodiments (Figs. 18-23) (*id.*, ¶¶76-85): These embodiments disclose additional details of Akifumi's invention when a MOS imaging element is used. *Id.*, ¶¶76-85.

3. Motivation to Combine Dutta (Ex-1007) and Akifumi (Ex-1009)

169. In my opinion, a POSITA would have been motivated to combine Dutta and Akifumi as I propose in the grounds below for multiple reasons.

170. First, it is my opinion that both references relate to capturing multiple images and correcting the images by compensating for camera motion. *See, e.g.*, Dutta (Ex-1007), Abstract ("The handheld device is moved so that the camera module takes a plurality of images of an object. A motion sensor assembly in the handheld device detects motion of the handheld device and movement information from the motion sensor assembly is used to modify each of the plurality of images to remove distortions therein caused by movement of the camera module."), ¶6, ¶¶17-22 (describing Fig. 3), ¶¶23-24 (describing Fig. 4), ¶¶25-27 (describing Fig. 5), ¶¶28-29 (describing Fig. 6); Akifumi (Ex-1009), ¶15 ("The object of the present invention is to provide an image inputting device that is able to carry out shaking correction effectively even when the recording frame rate is less than the frame rate of the image signal that is outputted from the imaging element.").

171. Second, it is my opinion that a POSITA would have been motivated to capture and correct images with Dutta's handheld device and combine those images into a stabilized video that is compressed and stored/displayed (as Akifumi teaches).

172. Notably, and as supported by the Examiner's findings and the '450 patent specification, it is my opinion a POSITA would have readily recognized that Dutta's disclosures regarding motion correcting sequential images were applicable to forming a video (which is a sequence of images). *See* '450FH (Ex-1002), 146-150 (Examiner finding that Dutta disclosed video-related limitations); '450 patent (Ex-1001), 11:54-62 ("[N]o distinction has been made between an imager that captures images one at a time, such as a digital camera, and one that captures sequence of images, such as digital or analog video recorders. A digital video recorder or similar device operates substantially the same way as a digital camera, with the addition of video compression techniques.").

173. Further, I note that Dutta's handheld device could transmit and display videos. Dutta (Ex-1007), ¶15 ("The handheld device 100 is configured to transmit information in the form of text, voice, images, audio, video[8] and the like…The display 104 is configured to display any form of textual, image and video information.").

174. And it is my opinion that Akifumi contemplates that motion correction and video compression techniques were applicable to mobile devices, such as

[8] I have added emphases in this declaration unless otherwise noted.

Dutta's handheld device. Akifumi (Ex-1009), ¶6 ("When one considers application to mobile image inputting devices that are to record video using these video compression protocols, there is a problem in that the shaking is detected as a motion vector for all blocks that structure the image."), ¶7 (disclosing that motion correction is important when videos are compressed because "when used in a mobile image inputting device, the degradation in image quality caused by shaking becomes a major issue").

175. In my opinion, a POSITA would therefore have recognized that Dutta's handheld device would be improved by capturing and compressing stabilized videos, for example, because this would advantageously allow users the ability to capture videos with a mobile handheld device they could carry with them frequently, which would make it possible to capture videos more spontaneously than would otherwise be possible with dedicated, larger video cameras.

176. Moreover, because Dutta does not detail how to shift an image with motion sensor data, it is my opinion that a POSITA would have been motivated to look to Akifumi for implementation details. I discuss those implementation details in the grounds below.

177. Further, it is my opinion that a POSITA would have recognized that applying compression techniques as disclosed in Akifumi would have been

advantageous for videos captured and stored on Dutta's mobile handheld device because it would reduce the video's size for storage on a mobile device with a limited storage capacity. *See, e.g.*, Hara (Ex-1011), ¶106 (explaining that images stored "without data compression…would require an extremely large memory capacity, which would cause the digital camera to be more expensive"); *id.* ("Consequently, preferably the image data is compressed as necessary for storage.").

178. Third, it is my opinion that a POSITA would have recognized that the combination of Dutta and Akifumi would have amounted to applying known techniques disclosed in Akifumi (correcting images for camera motion, combining the images into a stabilized video, applying compression, and storing/displaying the videos) to a known device (Dutta's handheld device) ready for improvement to yield predictable results (a handheld device that obtains stabilized/compressed videos).

179. Fourth, it is my opinion that a POSITA would have had a reasonable expectation of success in combining Dutta with Akifumi to capture/correct images and combine them to form stabilized/compressed videos. Indeed, as I noted previously, the '450 patent admits that digital cameras and video recorders "operate[] substantially the same way." '450 patent (Ex-1001), 11:57-62.

180. Thus, it is my opinion that adapting Dutta to incorporate Akifumi's teachings regarding correcting images for camera motion, combining the images into

a stabilized video, applying compression, and storing/displaying the videos would have been well within a POSITA's skill level.

4. Independent Claims 1, 14, 28, and 29

(a) 1[pre] A method for use in an imaging device comprising an image sensor, a processor, a memory, and one or more motion sensors, the method comprising; 14[pre] An imaging device, comprising; 28[pre] A method for use in an imaging device comprising an image sensor, a processor, a memory, and one or more motion sensors, the method comprising; 29[pre] An imaging device, comprising

181. If limiting, it is my opinion that the combination of Dutta and Akifumi teaches 1[pre]/14[pre]/28[pre]/29[pre].

182. Dutta discloses a handheld device 100 "configured to transmit information in the form of text, voice images, audio, video[,] and the like." Dutta (Ex-1007), ¶15.

183. The handheld device may be, e.g., a mobile phone or a dedicated "device which has no function other than to capture images of objects." *Id.*, ¶30.

184. The handheld device includes a micro camera module 204 "configured to focus onto and capture an image of an object." *Id.*, ¶16.

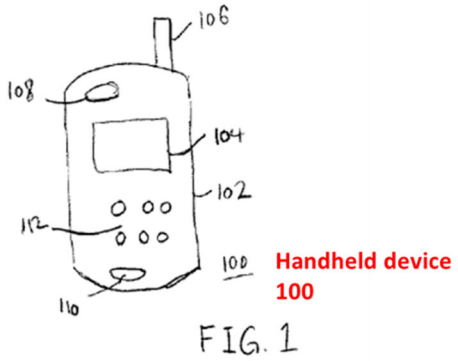

Dutta (Ex-1007), Fig. 1.

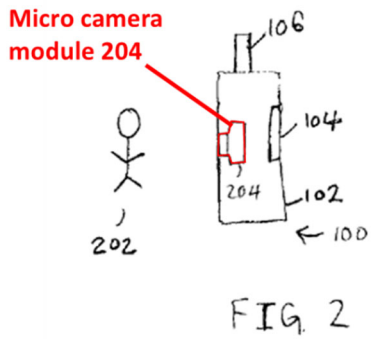

Dutta (Ex-1007), Fig. 2.

185. Figure 3 of Dutta shows a block diagram of the handheld device and illustrates components in more detail. Dutta, ¶17.

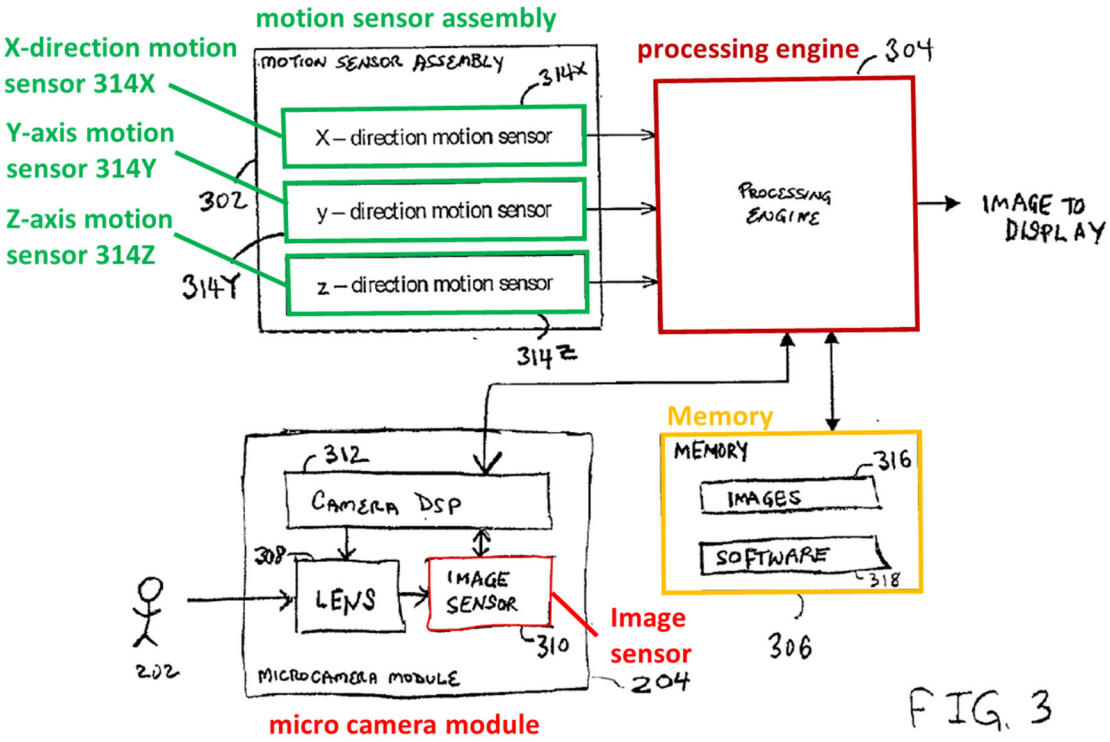

Dutta (Ex-1007), Fig. 3.

186. The micro camera module 204 shown in Figure 3 comprises a "miniature electronic camera, including, for example, an optical lens assembly 308, an image sensor 310, and a camera digital signal processor (DSP) 312." *Id.*, ¶17.

187. The handheld device also includes a "motion sensor assembly 302, a processing engine 304, and a memory 306." *Id.*

188. The image sensor "defines or captures a focused image of an object 202…" *Id.*, ¶18. The image sensor may be a "CCD (charge-coupled device)" or "a CMOS-based IC (integrated circuit)." *Id.* The camera DSP 312 receives signals from the image sensor and transmits the signal through the processing engine 304, and ultimately to the display 104 of the handheld device. *Id.*

189. The motion sensor assembly 302 includes "one or more motion sensors that preferably sense movement of the handheld device 100 in at least two, and preferably three, substantially perpendicular directions." *Id.*, ¶20. The motion sensor may be of any type. *Id.* (disclosing that in general there are two types of motion sensors, "accelerometers[,] which detect and measure linear acceleration, and gyroscopes, which detect and measure angular rotation"). "The particular type of motion sensor most suitable will typically depend upon the particular use of the handheld device of the present invention." *Id.*

190. In the embodiment shown above, the "motion sensor assembly 302 is a three-axis linear motion sensor comprising a X-direction motion sensor 314X, a Y-axis motion sensor 314Y, and a Z-axis motion sensor 314Z." *Id.*

191. The processing engine 304 "coordinates the actions of the micro camera module 204, access to the memory 306, and processes the images obtained in accordance with measurements taken by the motion sensors 314X, 314Y, 314Z for ultimate display by the display…, for storage in a local or remote database, or for transmittal elsewhere." *Id.*, ¶21.

192. Dutta discloses that a suitable processing engine would include a "central processing unit [CPU] capable of processing data and software programs." *Id.*

193. "The memory 306 stores images 316 captured by the camera module 204 and/or calibration images, and contains appropriate software 318 required for the operation of the various components of the device and for processing the images in response to the measurements obtained by the motion sensor assembly 302." *Id.*, ¶22.

194. In Figure 4, Dutta discloses a process for capturing a sequence of images of an object. *Id.*, ¶¶23-24. Dutta discloses specific examples when the object

is a line of alphabet letters and when the object is a three-dimensional object (such as a person) in Figures 5 and 6, respectively. *Id.*, ¶¶25-27 (Fig. 5), ¶28 (Fig. 6).

195. Because Dutta's processing engine includes a CPU that receives the motion sensor outputs (*see, e.g., id.*, Fig. 3) and processes an image to correct for motion of the handheld device (*id.*, ¶¶21-29, Figs. 4-6), it is my opinion that a POSITA would have understood that the processing engine performs operations on the motion sensor outputs to obtain data for correcting the images.

196. Further, it is my opinion that a POSITA would have understood that a digital CPU such as the processing engine's CPU would temporarily store information in memory—for example, in registers or another equivalent memory element[9]—to perform operations. Ex-1035, 1-3 (explaining that a microprocessor latches—that is, temporarily stores—values in registers and the microprocessor's

[9] Even if the processing engine were analog or hybrid (i.e., partly analog and partly digital), it is my opinion that the motion sensor outputs would be stored in order to use them for motion correction. If analog, the processing engine would store correction values in sample-and-hold circuits. Ex-1034, 34-35. If hybrid, then the processing engine would store the motion sensor outputs in either a sample-and-hold circuit or registers/equivalent memory elements.

arithmetic/logic unit (ALU) uses the latched values to perform mathematical operations); Ex-1036, 11 (disclosing regarding a von Neumann Architecture that "[t]he *registers* are fast memory modules from/to which data can be read/written to support streaming computation, as shown in Figure 1.8") (italics in original); Ex-1037, 2 ("The clock determines the order of events within a gate, and defines when signals can be converted to data to be read or written to processor components (e.g., registers or memory)"), 4-6 (illustrating registers); Ex-1038 (defining "register" as "[a] set of bits of high-speed memory within a microprocessor or other electronic device, used to hold data for a particular purpose"); Ex-1039 (defining "register" as "[a] memory location within a microprocessor, used to store values and external memory addresses while the microprocessor performs logical and arithmetic operations on them"). Thus, to perform operations on the motion sensor outputs and obtain data for correcting the images, it is my opinion that a POSITA would have understood that Dutta's processing engine's CPU includes memory elements that would temporarily store the motion sensor outputs. For the same reasons, to perform operations on the images to correct them, a POSITA would have understood that the image data would temporarily be stored in the memory elements of Dutta's processing engine's CPU.

197. In addition, although not expressly disclosed in Dutta, it is my opinion that a POSITA would have been motivated to store the motion sensor outputs temporarily in memory 306 so that the outputs would not be lost before the processing engine completed its calculations and the data was no longer needed. In my opinion, a POSITA would have understood that this would have the advantage of making the motion correction process more reliable.

198. Further, in my opinion, temporary storage of motion sensor data was well known in the art, and memory 306 was suitable for this purpose. *See, e.g.*, Hara (Ex-1011), ¶¶102-04 (disclosing that "[e]ach time an image is captured by [an] imaging element 110," the device stores camera shake detection results "at the time at which the image was captured"); *id.*, Fig. 16 (disclosing a "Shake Detection Result Storing Portion"); Dutta (Ex-1007), ¶22 (disclosing that that the purpose of the memory 306 is not only to store images, but also to store other information the processing engine would need access to, such as software "required for the operation of the various components of the device and for processing the images in response to the measurements obtained by the motion sensor assembly 302").

199. In my opinion, this would have amounted to applying a known technique (temporary data storage) to a known device (Dutta's handheld device)

ready for improvement to yield predictable results (temporary storage of the motion sensor outputs in memory 306).

200. In addition, to the extent not expressly disclosed in Dutta, Akifumi discloses an imaging device that applies image correction in the video context. Akifumi (Ex-1009), ¶¶27-85.

201. Thus, in my opinion, the combination of Dutta and Akifumi teaches the claimed *imaging device*[10] and a *method* for using it. Specifically, in my opinion, the combination of Dutta and Akifumi teaches a handheld device 100 such as a mobile phone or dedicated imaging device (*imaging device*) and a *method* for using the device. Further, in my opinion, the combination of Dutta and Akifumi teaches that the *imaging device* includes an image sensor 310 (*image sensor*); a processing engine 304 that includes a CPU (*processor*); memory 306 for storing both images and motion sensor outputs and memory elements within processing engine 304 that store motion sensor outputs and images to be corrected (collectively, the claimed *memory*); and a motion sensor assembly 302 that includes motion sensors 314X/Y/Z (*one or more motion sensors*).

[10] I use italics in this declaration to indicate claim language.

(b) [1.1] capturing a sequence of images with the image sensor, wherein the sequence of images comprise a video, and storing the images in the memory; [14.1] an image sensor configured to capture a sequence of images, wherein the sequence of images comprise a video, and store the images in a memory; [28.1] capturing a sequence of images with the image sensor, wherein the sequence of images comprise a video; [29.1] an image sensor configured to capture a sequence of images, wherein the sequence of images comprise a video

202. In my opinion, the combination of Dutta and Akifumi teaches [1.1]/[14.1]/[28.1]/[29.1].

203. Dutta discloses that image sensor 310 captures multiple images and that each image is stored in memory 306 for processing. Dutta (Ex-1007), ¶18 ("The image sensor 310 defines or captures a focused image of an object 202 transmitted from the lens assembly 308 and generates an appropriate electrical signal corresponding to the captured image."), ¶22 ("The memory 306 stores images 316 captured by the camera module 204 and/or calibration images."), ¶23 (disclosing with respect to Figure 4 that images or objects are obtained in step 404, stored in memory in step 406, processed in step 408, and—unless it is determined in step 410 that scanning is complete—motion is then detected in step 412 and the process is repeated), ¶26 (disclosing with respect to Figure 5 that handheld device "takes a plurality of pictures of the object 502" and generates "four images 504_1, 504_2, 504_3,

504_4”),[11] ¶28 (disclosing with respect to Figure 6 that “handheld device 308 focuses on the object 702 and takes a plurality of images, 704_2, 704_3, 704_4 and 704_5, each of which are stored in memory”), Figs. 3-6. As I explained regarding 1[pre], the combination of Dutta and Akifumi also teaches that the image data would temporarily be stored in the memory elements of Dutta’s processing engine 304’s CPU in order to correct the images. §XI.A.4(a) (citing Dutta (Ex-1007), Figs. 3-6, ¶¶21-29; Ex-1034, 34-35; Ex-1035, 1-3; Ex-1036, 11; Ex-1037, 2, 4-6; Ex-1038 (defining “register”); Ex-1039 (defining “register”); Hara (Ex-1011), ¶¶102-04, Fig. 16). The communication path between memory 306 and the processing engine 304 is illustrated, for example, in Figure 3.

[11] In my opinion, a POSITA would have understood that the images are stored in memory in this embodiment because it is a specific example of the embodiment shown in Figure 4 (which stores each image in memory). Dutta (Ex-1007), ¶23.

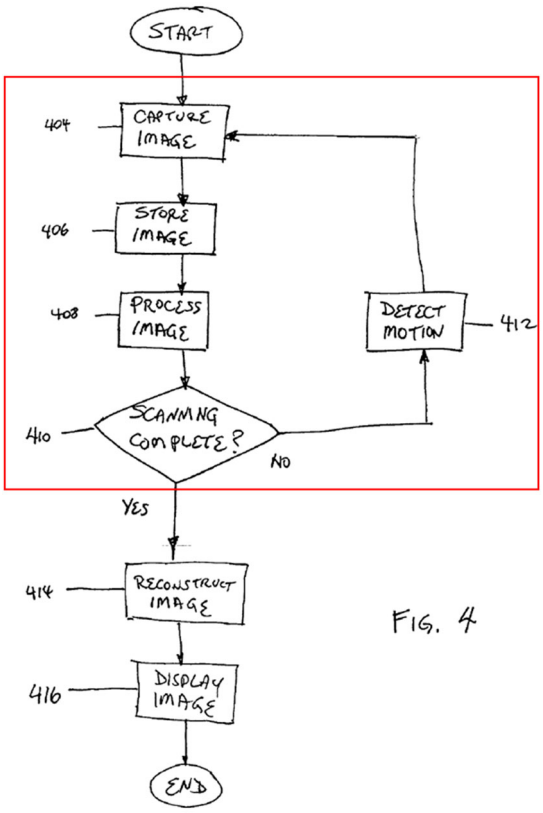

Dutta (Ex-1007), Fig. 4.

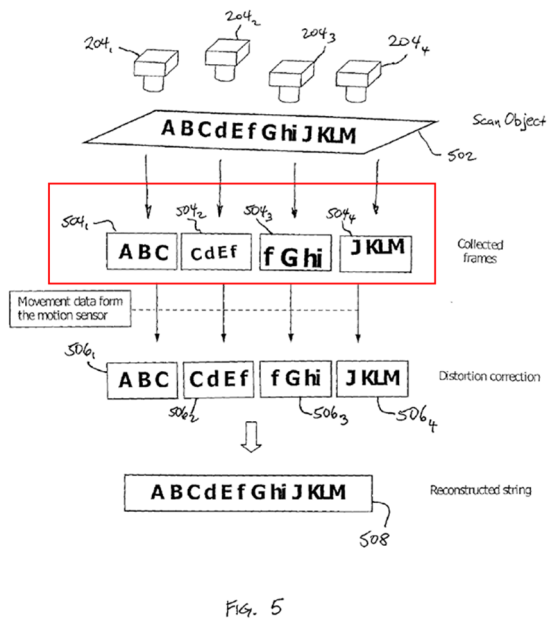

FIG. 5

Dutta (Ex-1007), Fig. 5.

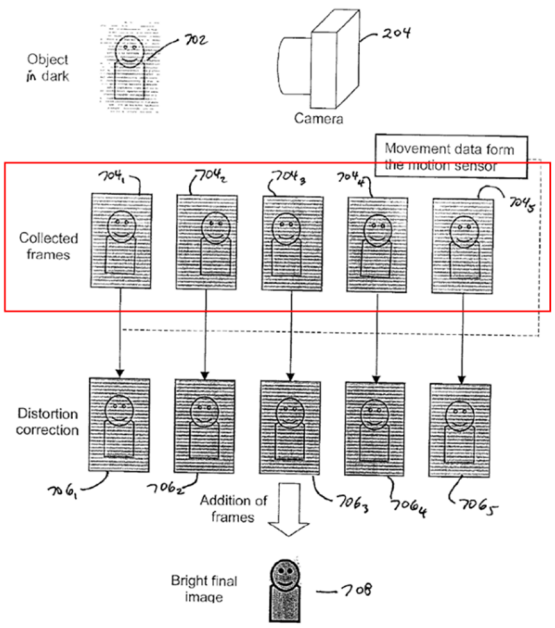

FIG. 6

Dutta (Ex-1007), Fig. 6.

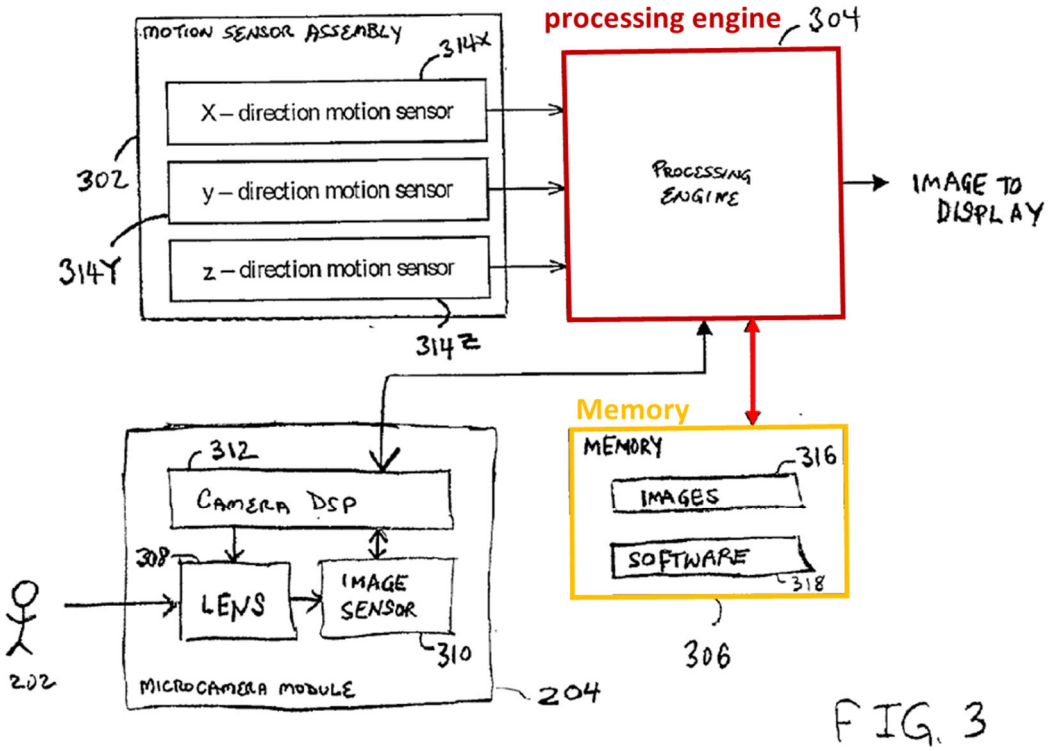

Dutta, Fig. 3.

204. In my opinion, a POSITA would have understood in view of Akifumi that a sequence of images may be captured for purposes of assembling them into a video. *See, e.g.*, Akifumi (Ex-1009), ¶59 (disclosing an image inputting device that captures images as frames of a video and performs motion correction); *see also* ’450FH (Ex-1002), 146-150 (Examiner finding that Dutta disclosed video-related limitations); ’450 patent (Ex-1001), 11:54-62.

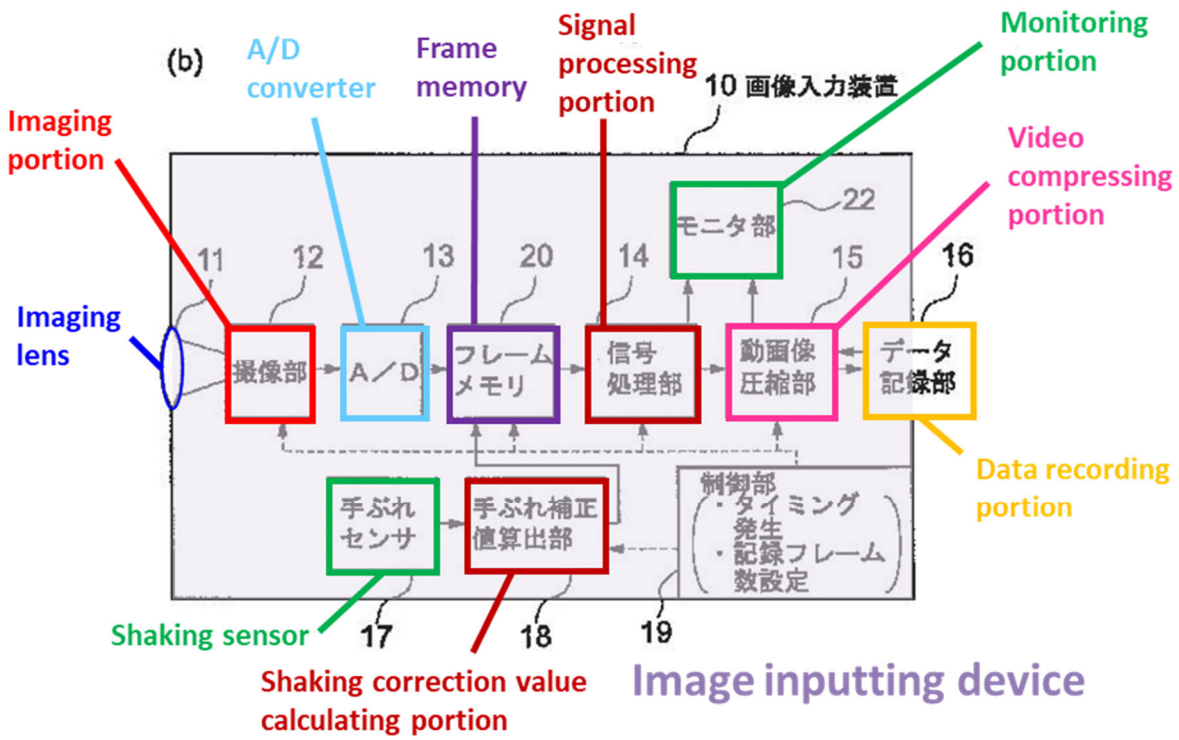

Akifumi (Ex-1009), Fig. 11(b).

205. In my opinion, a POSITA would have been motivated to combine Dutta and Akifumi to capture the sequence of images for purposes of assembling them into a video for the reasons I described in §XI.A.3.

206. Thus, in my opinion, the combination of Dutta and Akifumi teaches capturing multiple images with Dutta's image sensor 310, e.g., as disclosed in Dutta's Figures 4, 5, and 6 (*capturing a sequence of images with the image sensor/an image sensor configured to capture a sequence of images*). Further, in my opinion, the combination of Dutta and Akifumi teaches that the captured *sequence of images comprise a video*. Finally, it is my opinion that the combination of Dutta and Akifumi teaches that capturing the sequence of images with the image sensor 310

causes the images to be stored in memory 306 for subsequent processing, and further that the images would temporarily be stored in the processing engine 304's CPU's memory elements when performing corrections with values calculated from motion information (*storing the images in the memory/an image sensor configured to…store the images in a memory*).

(c) [1.2] detecting, by the one or more motion sensors, motion information for one or more images of the sequence of images, wherein the motion information represents motion of the device during capturing of the one or more images of the sequence of images, and storing the motion information in the memory synchronously with the storing of the one or more images; [14.2] one or more motion sensors configured to detect motion information for one or more images of the sequence of images, wherein the motion information represents motion of the imaging device during capturing of the one or more images of the sequence of images, and store the motion information in the memory synchronously with the storing of the one or more images; and; [28.2] detecting, by the one or more motion sensors, motion information for one or more images of the sequence of images, wherein the motion information represents motion of the device during capturing of the one or more images of the sequence of images; [29.2] one or more motion sensors configured to detect motion information for one or more images of the sequence of images, wherein the motion information represents motion of the imaging device during capturing of the one or more images of the sequence of images

207. In my opinion, the combination of Dutta and Akifumi teaches [1.2]/[14.2]/[28.2]/[29.2].

208. Dutta discloses that the motion sensor assembly includes motion sensors 314X/Y/Z. Dutta (Ex-1007), ¶20.

209. As Dutta illustrates in Figure 3, the outputs of these sensors are inputs to the processing engine 304.

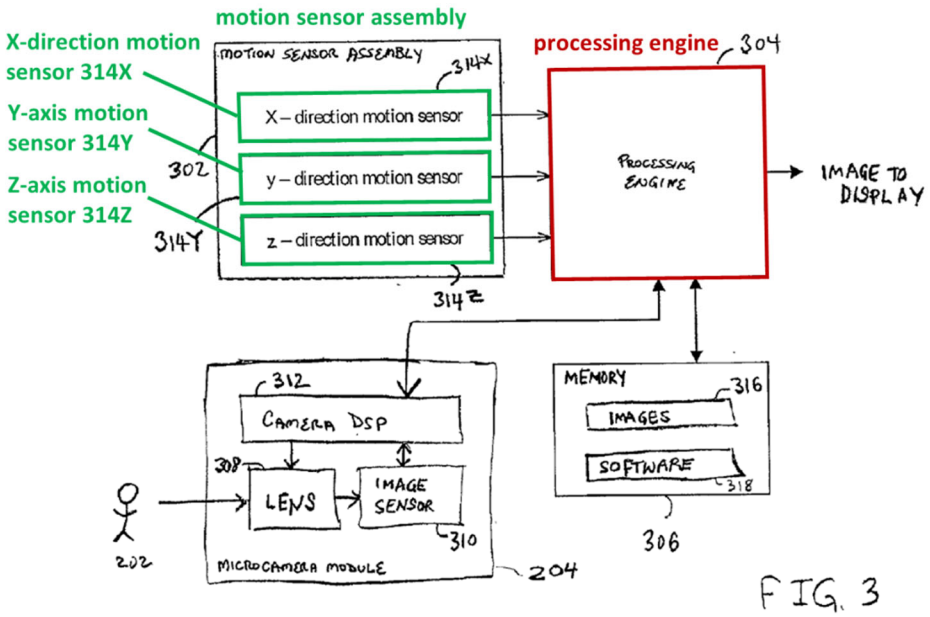

Dutta (Ex-1007), Fig. 3.

210. Dutta discloses that the processing engine "processes the images obtained in accordance with measurements taken by the motion sensors 314X, 314Y, 314Z..." *Id.*, ¶21.

211. Similarly, when illustrating the process in Figure 4, Dutta explains that each "scanned image of [an] object is stored in memory for further processing and/or display, step 406." *Id.*, ¶23.

212. If a captured image is the second or a subsequent image, in step 408, Dutta discloses that "the image is processed…in accordance with information gathered by the device including detected motion and/or brightness of the obtained image." *Id.*

213. "For example, the detected motion of the handheld device is used to correct the position, orientation[,] and size of the image." *Id.*

214. "If additional images are to be taken, motion of the handheld device is measured, [in] step 412, and this information is transmitted to the processing engine for subsequent image processing. An additional image is then obtained, [in] step 404, and the process continues until all image acquisition is done." *Id.*

215. Dutta also explains that "many of the steps can be performed simultaneously in parallel with respect to capturing and/or processing successive images of the object." *Id.*, ¶24.

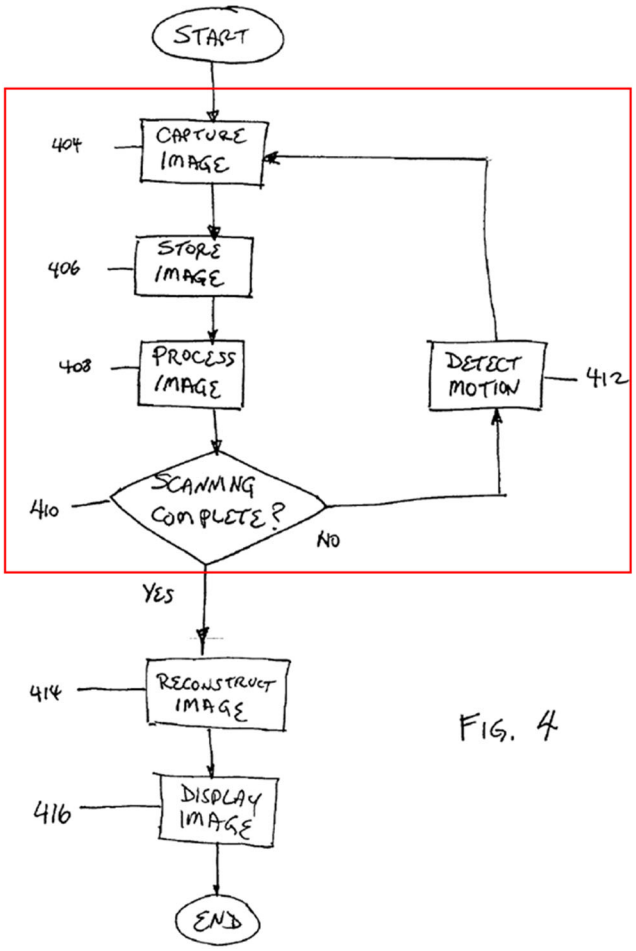

Dutta (Ex-1007), Fig. 4.

216. Regarding the Figure 6 embodiment, Dutta also discloses "tak[ing] a plurality of images, 704_2, 704_3, 704_4 and 704_5, each of which are stored in memory." *Id.*, ¶28.

217. "Each of these images are processed to correct for motion of the handheld device that is detected by the motion sensors to generate[] an equal number

of distortion corrected images, 704_1, 704_2, 704_3, 704_4, and 704_5." *Id.*[12]; *see also id.*, ¶¶25-27 (describing Figure 5 embodiment, which in my opinion a POSITA would have understood also stores images in memory because it is a specific example of the embodiment shown in Figure 4 (which stores each image in memory (*see* Dutta (Ex-1007), ¶23)).

218. As I explained with respect to 1[pre] and [1.1], the combination of Dutta and Akifumi teaches memory 306 and memory elements within processing engine 304's CPU, both of which would store images to be corrected and motion sensor outputs. §§XI.A.4(a)-XI.A.4(b) (citing Dutta (Ex-1007), Figs. 3-6, ¶¶21-29; Ex-1034, 34-35; Ex-1035, 1-3; Ex-1036, 11; Ex-1037, 2, 4-6; Ex-1038 (defining "register"); Ex-1039 (defining "register"); Hara (Ex-1011), ¶¶102-04, Fig. 16).

---

[12] The motion sensors are gyroscopes that detect rotation in this embodiment. Dutta (Ex-1007), ¶28. However, Dutta discloses that the motion sensors can be of any type, such that a linear sensor could also be used in this embodiment. *Id.*, ¶20 (explaining that in general there are two types of sensors, "accelerometers[,] which detect and measure linear acceleration, and gyroscopes, which detect and measure angular rotation"); *id.*, ¶31 ("Substitutions of elements from one described embodiment to another are also fully intended and contemplated.").

219. In my opinion, a POSITA also would have understood or found it obvious that Dutta's motion sensor outputs would be received and stored in both memory 306 and the processing engine's memory elements at substantially the same time the image to be corrected was captured/stored in memory 306/the memory elements—that is, the motion sensor outputs would be received/stored either just before capturing/storing the image (Dutta (Ex-1007), ¶23) or "in parallel" with capturing/storing the image (*id.*, ¶24). Dutta explains that "many of the steps can be performed simultaneously in parallel with respect to capturing and/or processing successive images of the object," including capturing motion data for an image (step 412), capturing and storing the image (steps 404, 406), and processing the image (step 408). *Id.*, ¶24.

220. In my opinion, storing the motion sensor outputs in memory 306 at substantially the same time as an image to be corrected is captured and stored in memory 306 would advantageously avoid losing the motion information before the image was corrected. Further, storing motion sensor outputs related to device motion when an image was captured in processing engine 304's memory elements at substantially the same time the image was stored in the memory elements is what would allow processing engine 304 to "process[] the images obtained in accordance with measurements taken by the motion sensors 314X, 314Y, 314Z." Dutta (Ex-

1007), ¶21, ¶23 (regarding Figure 4, describing processing the image in step 408 "in accordance with information gathered by the device including detected motion"), ¶27 (regarding Figure 5, explaining that "[m]ovement data from the motion sensor assembly 302" is used to correct the images), ¶28 (describing processing the images captured in Figure 6 "to correct for motion of the handheld device that is detected by the motion sensors").

221. Thus, in my opinion, the combination of Dutta and Akifumi teaches motion sensors (e.g., 314X/Y/Z) that detect the motion of the handheld device just before/in parallel with the capture of a second and subsequent images in a sequence of images (*detecting, by the one or more motion sensors, motion information for one or more images of the sequence of images, wherein the motion information represents motion of the device during capturing of the one or more images of the sequence of images/one or more motion sensors configured to detect motion information for one or more images of the sequence of images, wherein the motion information represents motion of the imaging device during capturing of the one or more images of the sequence of images*).

222. In my opinion, the combination of Dutta and Akifumi further teaches that the motion sensors send their outputs (*motion information*) to the processing engine 304 when an image to be corrected is captured, causing the outputs to be

stored in memory 306 and in the processing engine 304's CPU's memory elements for further processing (both of which are *memory*) at substantially the same time as the captured image to be motion corrected is stored in memory 306 and in the processing engine 304's CPU's memory elements for correction (both memory 306 and the processing engine 304's CPU's memory elements are *memory*) (*storing the motion information in the memory synchronously with the storing of the one or more images/one or more motion sensors configured to…store the motion information in the memory synchronously with the storing of the one or more images*).

(d) [1.3] determining, by the processor, a vertical shift value and a horizontal shift value for one or more images of the sequence of images based at least in part on the motion information; [14.3] a processor configured to: determine a vertical shift value and a horizontal shift value for one or more images of the sequence of images based at least in part on the motion information; [28.3] determining, by the processor, a vertical shift value and a horizontal shift value for one or more images of the sequence of images based at least in part on the motion information; [29.3] a processor configured to: determine a vertical shift value and a horizontal shift value for one or more images of the sequence of images based at least in part on the motion information

223. In my opinion, the combination of Dutta and Akifumi teaches [1.3]/[14.3]/[28.3]/[29.3].

224. Dutta discloses that the processing engine corrects images based on the motion sensor outputs. Dutta (Ex-1007), ¶¶21, 23, 28.

225. However, Dutta does not disclose details regarding how the images are corrected. For the reasons described in §XI.A.3, in my opinion, a POSITA would have been motivated to look to Akifumi for details regarding how to use motion sensor outputs to correct an image.

226. Akifumi discloses a shaking correction value calculating portion that receives an output from a motion sensor to correct an image that is temporarily stored in frame memory. Akifumi (Ex-1009), Fig. 11(b).

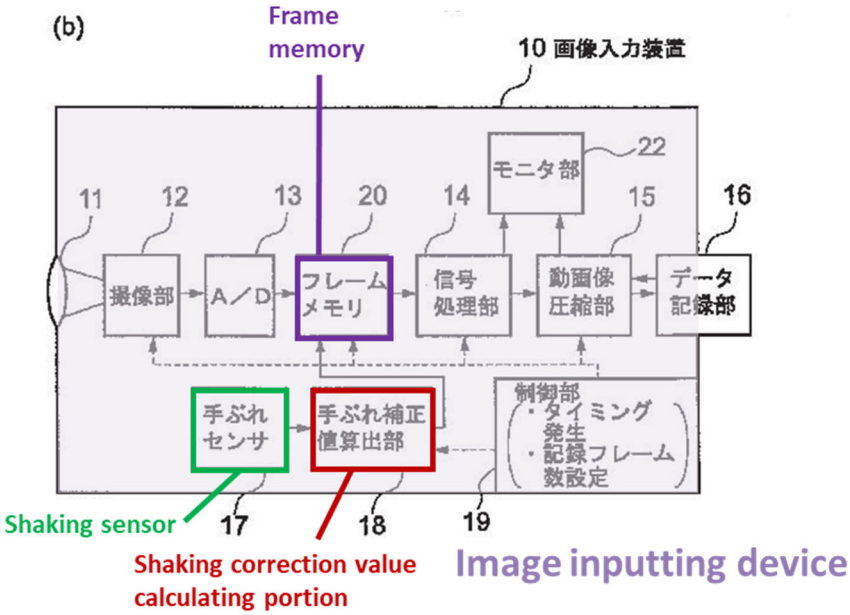

Akifumi (Ex-1009), Fig. 11(b).

227. Specifically, when an image is temporarily stored in frame memory (similar to Dutta's storage of an image in memory 306), Akifumi explains that "the position for reading out is varied depending on the shaking correction value from the shaking correction value calculating portion 18." Akifumi, ¶41 (disclosing how

the shaking correction value is used with respect to Figure 6, which, in my opinion, a POSITA would have understood also applied to Figure 11(b) because Figure 11(b) includes the same structure as Figure 6 other than adding a monitoring portion 22); *see also id.*, ¶3 (explaining that in prior art electronic correction techniques "the image signal that is read out is recorded temporarily in a frame memory and the position read out from the frame member is varied, to correct the shaking electronically"), ¶4 (explaining regarding Figure 24's illustration of the "basic principles of electronic shaking correction"—*see* [Brief Description of the Drawings], p.12—that "the position read out from the temporary storage in frame memory…is changed with each frame depending on the shaking correction value"), ¶8 (describing prior art technique that changes "the positions that are read out from frame memory"), ¶¶16 and 24 (explaining in the means for solving the problem section that shaking correction may be carried out by "varying the position that is read out from the frame memory").

228. Because Akifumi discloses that the "position for reading out is varied" based on the shaking correction value, in my opinion a POSITA would have understood that Akifumi discloses that the shaking correction value has vertical/horizontal components causing vertical/horizontal shifts in the "read out" position from frame memory.

229. For example, when Akifumi explains its invention in the context of shifting captured images in the imaging portion (that is, in an alternative embodiment that does not temporarily store uncorrected images in frame memory), Akifumi discloses that the shake correction value includes "vertical direction and horizontal direction shift magnitudes." Akifumi (Ex-1009), ¶72.

230. In my opinion, a POSITA would have understood that these teachings regarding vertical/horizontal shift magnitudes also apply when shifting an image temporarily stored in memory because pixels comprising an image are stored in memory in a two-dimensional (i.e., rows/columns) plane. Therefore, changing the "read out" position in memory would also involve a shift in the "read out" position in two dimensions (i.e., the vertical/horizontal directions). *See, e.g.*, Gal (Ex-1012), 4:50-66 (disclosing a "memory plane" that has "a matrix of memory elements arran[g]ed in vertical columns and horizontal rows corresponding to the matrix of light sensing elements" in an image sensor, and further disclosing memory address register (MAR)-Y and MAR-X values—that is, shift values in the vertical and horizontal directions—that "control the input of the information stream…into the proper places in the memory plane" to "compensate for the positional displacements sensed").

231. Further, Akifumi's Figure 24—which discloses the "basic principles of electronic shaking correction"—reinforces this conclusion. Akifumi (Ex-1009), [Brief Description of the Drawings], p.12.

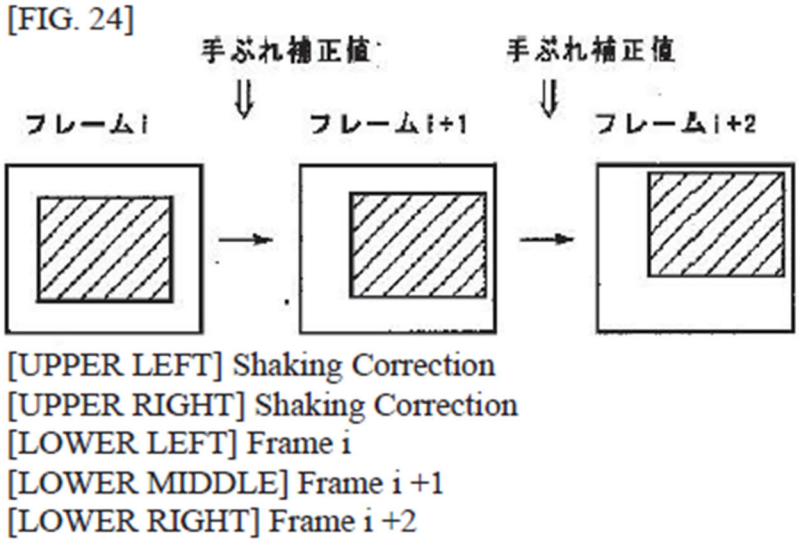

Akifumi, Fig. 24.

232. As Figure 24 illustrates, when performing electronic shaking correction, the "position read out from the imaging signal, or the position read out from the temporary storage in frame memory, is changed with each frame depending on the shaking correction value, to carry out shaking correction." *Id.*, ¶4. As illustrated, changing the position "read out" from memory would involve shifting the image (represented by the rectangle with diagonal lines) in vertical and horizontal directions in the memory plane.

233. Thus, in my opinion, the combination of Dutta and Akifumi teaches processing engine 304 correcting each image after the first using motion sensor inputs (e.g., 314X/Y/Z) to calculate vertical/horizontal values (*vertical/horizontal shift values*) that can be used to change the "read out" position of the image from memory in the vertical/horizontal directions (*determining, by the processor, a vertical shift value and a horizontal shift value for one or more images of the sequence of images based at least in part on the motion information/a processor configured to: determine a vertical shift value and a horizontal shift value for one or more images of the sequence of images based at least in part on the motion information*).

(e) [1.4] modifying, by the processor, one or more images of the sequence of images based at least in part on the vertical and the horizontal shift values; [14.4] [a processor configured to:] …modify one or more images of the sequence of images based at least in part on the vertical and the horizontal shift values; and [28.4] modifying, by the processor, one or more images of the sequence of images based at least in part on the vertical and the horizontal shift values; [29.4] [a processor configured to:] …modify one or more images of the sequence of images based at least in part on the vertical and the horizontal shift values; and

234. In my opinion, the combination of Dutta and Akifumi teaches [1.4]/[14.4]/[28.4]/[29.4].

235. Dutta discloses that the processing engine corrects images based on the motion sensor outputs. Dutta (Ex-1007), ¶¶21, 23, 28.

236. As I described regarding [1.3]/[14.3]/[28.3]/[29.3] (§XI.A.4(d)), the combination of Dutta and Akifumi teaches that the processing engine performs this correction using vertical/horizontal shift values calculated with the motion sensor outputs to change the "read out" position of the image in the vertical/horizontal directions. Akifumi (Ex-1009), ¶¶41, 72, Fig. 6, Fig. 11(b).

237. Thus, in my opinion, the combination of Dutta and Akifumi teaches that the processing engine 304 corrects images in a sequence using vertical/horizontal values that change the "read out" position of the image in the vertical/horizontal directions (*modifying, by the processor, one or more images of the sequence of images based at least in part on the vertical and the horizontal shift values/[a processor configured to:]…modify one or more images of the sequence of images based at least in part on the vertical and the horizontal shift values*).

(f) [1.5] combining, by the processor, the modified images to obtain a final video; and; [14.5] [a processor configured to:] …combine the modified images to obtain a final video; and; [28.5] combining, by the processor, the modified images, and applying a video compression technique to obtain a final video; and; [29.5] [a processor configured to:] …combine the modified images, and apply a video compression technique to obtain a final video; and

238. In my opinion, the combination of Dutta and Akifumi teaches [1.5]/[14.5]/[28.5]/[29.5].

239. Dutta discloses that the handheld device "is configured to transmit information in the form of text, voice, images, audio, video and the like." Dutta (Ex-1007), ¶15.

240. Further, Dutta discloses that "[t]he display 104 is configured to display any form of textual, image and video information." *Id.* Dutta discloses that corrected images are combined into a final image. *Id.*, ¶23 (regarding Figure 4, explaining that "an entire image of the object is reconstructed based upon the previously acquired and processed images, step 414"), ¶27 (describing regarding Figure 5 that an "entire image 508 of the object is then reconstructed by assembling the images and removing any overlapping portions"), ¶28 (describing regarding Figure 6 that "distortion corrected images" are "combined to form a bright final image 708").

241. Although it is my opinion that a POSITA would have readily recognized that motion corrected images can be combined into a video for the

reasons I previously explained (*see* §XI.A.3), Dutta does not explicitly disclose that its motion corrected images are combined into a video.

242. In my opinion, in view of Akifumi, a POSITA would have been motivated to use processing engine 304 to combine motion corrected images into a final video and apply video compression so that the resulting video could be stored/played back on Dutta's handheld device. §XI.A.3.

243. Akifumi discloses that its camera includes a video compressing portion 15 and a data recording portion 16 that stores the compressed image data. Akifumi (Ex-1009), ¶28 ("In the video compressing portion 15, the data volume is reduced through MPEG or another digital video compressing technique, and the compressed image data produced thereby is recorded to a suitable recording medium by the data recording portion 16").

244. Akifumi further discloses that "the image data that is recorded by the data recording portion 16 is decompressed by the video decompressing function (local decoding function) of the video compressing portion 15, and played back on a built-in monitoring portion 22." *Id.*, ¶59.

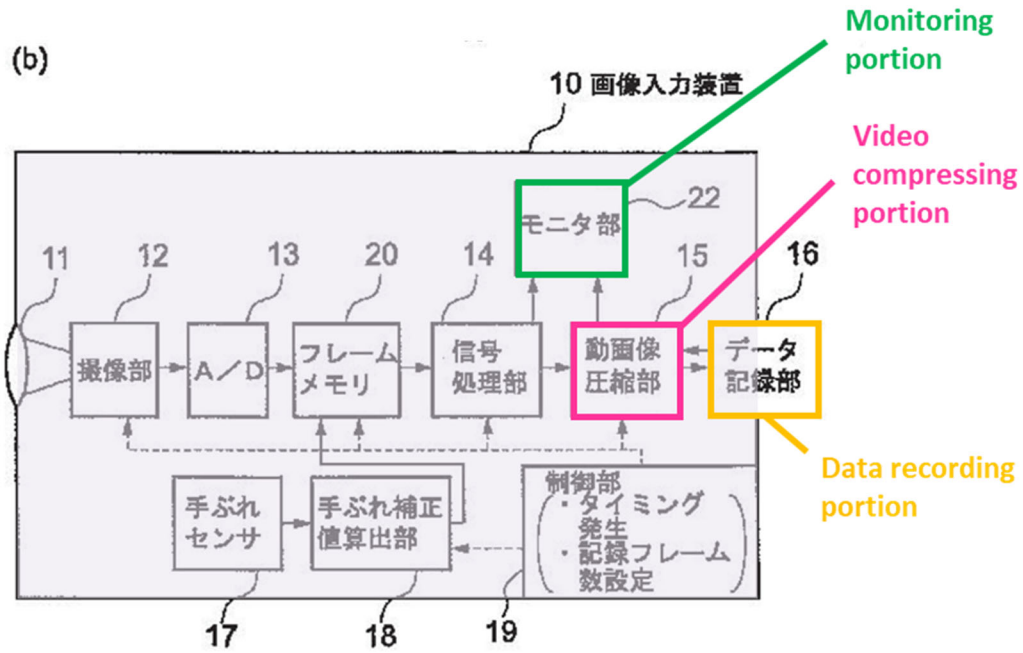

Akifumi (Ex-1009), Fig. 11(b).

245. In other words, as the images are motion corrected, Akifumi discloses that they are assembled into a final video that is then compressed in video compressing portion 15 (e.g., with MPEG) and recorded in data recording portion 16 for playback.

246. Thus, in my opinion, the combination of Dutta and Akifumi teaches that motion corrected images are frames of a video that are collected/assembled by processing engine 304 and compressed into a final video for storage in memory (*combining, by the processor, the modified images to obtain a final video/[a processor configured to:]…combine the modified images to obtain a final video/combining, by the processor, the modified images, and applying a video compression technique to obtain a final video/[a processor configured*

to:]…combine the modified images, and apply a video compression technique to obtain a final video).

(g) [1.6] storing the final video in the memory; [14.6] wherein the memory is further configured to store the final video; [28.6] storing the final video in the memory; [29.6] a memory configured to store the final video

247. In my opinion, the combination of Dutta and Akifumi renders [1.6]/[14.6]/[28.6]/[29.6] obvious.

248. Dutta discloses that the results of image processing, including a final reconstructed image, may be stored locally, for example, in memory 306. Dutta, ¶¶21-22; *see also id.*, ¶23 ("Alternatively, or in addition, the reconstructed image may be stored locally or remotely as an image or converted from an image into text, etc., by an optical character recognition (OCR) program."), ¶27 ("The reconstructed image may be displayed, stored, or transmitted, as discussed above.").

249. Akifumi discloses that a compressed, final video is recorded in data recording portion 16 for subsequent playback on the device. *See* [1.5] (§XI.A.4(f)); Akifumi (Ex-1009), ¶¶28, 59.

250. In my opinion, in view of Akifumi, a POSITA would have been motivated to store a compressed, final video in memory 306 on Dutta's handheld device. §XI.A.3.

251. Thus, in my opinion, the combination of Dutta and Akifumi teaches that a compressed, final video is stored in local memory on Dutta's handheld device (*storing the final video in the memory/wherein the memory is further configured to store the final video/a memory configured to store the final video*).

5. Claim 2: The method of claim 1, wherein the processor determines the vertical and horizontal shift values for one or more images for which the motion information is detected; Claim 15: The imaging device of claim 14, wherein the processor is configured to determine the vertical and horizontal shift values for one or more images of the sequence of images for which the motion information is detected

252. In my opinion, the combination of Dutta and Akifumi teaches claims 2 and 15's additional limitations.

253. As I described regarding [1.2]/[14.2]/[1.3]/[14.3] (§§XI.A.4(c), XI.A.4(d)), for each image after the first, Dutta's processing engine 304 detects and stores motion sensor outputs (*motion information*) for images to be corrected (Dutta Ex-1007), ¶¶20-21, 24, 28, Fig. 4), and the combination of Dutta and Akifumi teaches that the processing engine uses the motion sensor outputs to calculate *vertical and horizontal shift values* that can be used to change the "read out" position from memory in the vertical/horizontal directions (*the processor determines the vertical and horizontal shift values for one or more images for which the motion information is detected/the processor is configured to determine the vertical and*

horizontal shift values for one or more images of the sequence of images for which the motion information is detected). Akifumi (Ex-1009), ¶¶41, 72, Fig. 11(b).

6. Claim 3: The method of claim 1, wherein the processor modifies one or more images for which the vertical and horizontal shift values are determined; Claim 16: The imaging device of claim 14, wherein the processor is configured to modify one or more images of the sequence of images for which the vertical and horizontal shift values are determined

254. In my opinion, the combination of Dutta and Akifumi teaches claims 3 and 16's additional limitations.

255. As I described regarding [1.4]/[14.4] (§XI.A.4(e)), Dutta's processing engine 304 *modifies* each image after the first by applying Akifumi's teachings to use *vertical/horizontal shift values* that change the "read out" position of the image from memory in the vertical/horizontal directions (*the processor modifies one or more images for which the vertical and horizontal shift values are determined/the processor is configured to modify one or more images of the sequence of images for which the vertical and horizontal shift values are determined*). Dutta (Ex-1007), ¶¶21, 23, 28; Akifumi (Ex-1009), ¶¶41, 72, Fig. 6, Fig. 11(b).

7. Claim 4: The method of claim 1, wherein the processor modifies one or more images of the sequence of images such that effect of motion of the device during capturing of the one or more images of the sequence of images is reduced in the final video; Claim 17: The imaging device of claim 14, wherein the processor is configured to modify one or more images of the sequence of images such that effect of motion of the device during capturing of the one or more images of the sequence of images is reduced in the final video

256. In my opinion, the combination of Dutta and Akifumi teaches claims 4 and 17's additional limitations.

257. As I described regarding [1.3]/[14.3]/[1.4]/[14.4] and claims 3/16 (§§XI.A.4(d), XI.A.4(e), XI.A.6), the combination of Dutta and Akifumi teaches that the processing engine 304 corrects (that is, modifies) each image after the first based on movement of the handheld device just before/at the time the image is captured, and further, that this correction is based on a "shaking correction value." Dutta (Ex-1007), ¶¶6, 21, 23, 27-29; Akifumi (Ex-1009), ¶¶41, 72, Fig. 11(b).

258. Thus, in my opinion, the combination of Dutta and Akifumi teaches that the processing engine 304 performs "shaking correction" on images captured with Dutta's handheld device so that the effect of motion is reduced when the images are assembled into the final video (*the processor modifies one or more images of the sequence of images such that effect of motion of the device during capturing of the one or more images of the sequence of images is reduced in the final video/the processor is configured to modify one or more images of the sequence of images*

such that effect of motion of the device during capturing of the one or more images of the sequence of images is reduced in the final video).

8. Claim 5: The method of claim 1, wherein the processor determines a vertical shift value and a horizontal shift value for each image of the sequence of images; Claim 18: The imaging device of claim 14, wherein the processor is configured to determine a vertical shift value and a horizontal shift value for each of the images of the sequence of images

259. In my opinion, the combination of Dutta and Akifumi teaches claims 5 and 18's additional limitations.

260. As I described regarding [1.3]/[14.3] (§XI.A.4(d)), the combination of Dutta and Akifumi teaches processing engine 304 correcting each image after the first using motion sensor outputs (e.g., 314X/Y/Z) to calculate *vertical/horizontal shift values* that are then used to change the "read out" position of the image in the vertical/horizontal directions (*the processor determines a vertical shift value and a horizontal shift value for each image of the sequence of images/the processor is configured to determine a vertical shift value and a horizontal shift value for each of the images of the sequence of images*).

261. To the extent shift values must also be calculated for the first image (even though there would be no reference camera position measured at the time a previous image was captured), in my opinion, a POSITA would have understood that the device in the combination of Dutta and Akifumi would still receive motion

sensor data when the first image is captured, and thus would calculate the vertical/horizontal shift value to be 0.

262. At a minimum, it is my opinion that this would have been obvious to a POSITA because it would simplify the implementation to process the first image the same way that subsequent images are processed (i.e., calculate a 0 shift for the first image). Further, in my opinion, this would have amounted to choosing from two predictable solutions (either perform the same shift value processing for all images or skip the first image when calculating shift values) with a reasonable expectation of success.

9. Claim 6: The method of claim 1, wherein the motion information represents motion of the device at time of capturing of one or more images of the sequence of images; Claim 19: The imaging device of claim 14, wherein the motion information detected by the one or more motion sensors represents motion of the device at time of capturing of one or more images of the sequence of images

263. In my opinion, the combination of Dutta and Akifumi teaches claims 6 and 19's additional limitations.

264. As I described regarding [1.2]/[14.2] (§XI.A.4(c)), the combination of Dutta and Akifumi teaches motion sensors (e.g., 314X/Y/Z) that detect the motion of the handheld device just before/in parallel with the capture of a second/subsequent images in a sequence of images (*the motion information represents motion of the device at time of capturing of one or more images of the sequence of images/the*

motion information detected by the one or more motion sensors represents motion of the device at time of capturing of one or more images of the sequence of images). Dutta (Ex-1007), ¶¶20-24, Fig. 4.

10. Claim 7: The method of claim 1, wherein the one or more images of the sequence of images is at least two images, and wherein the motion information represents motion of the device between capturing of consecutive images; Claim 20: The imaging device of claim 14, wherein the one or more images of the sequence of images is at least two images, and wherein the motion information detected by the one or more motion sensors represents motion of the device between capturing of consecutive images; Claim 30: The imaging device of claim 29, wherein the one or more images of the sequence of images is at least two images, and wherein the motion information detected by the one or more motion sensors represents motion of the device between capturing of consecutive images

265. In my opinion, the combination of Dutta and Akifumi teaches claims 7, 20, and 30's additional limitations.

266. As I described regarding [1.1]/[14.1]/[29.1] (§XI.A.4(b)), Dutta's handheld device captures a sequence of images, which includes at least two images. *E.g.,* Dutta, ¶23 (disclosing with respect to Figure 4 that images or objects are obtained in step 404, stored in memory in step 406, processed in step 408, and—unless it is determined in step 410 that scanning is complete—motion is then detected in step 412 and the process is repeated); *id.*, ¶28 (disclosing with respect to Figure 6 that "handheld device 308 focuses on the object 702 and takes a plurality

of images, 704_2, 704_3, 704_4 and 704_5, each of which are stored in memory"); *id.*, ¶¶25-27 (describing Figure 5 embodiment capturing a sequence of images).

267. Dutta further discloses that the motion sensors measure device motion between capturing one image and the next image. *See, e.g.*, *id.*, ¶28 (disclosing regarding Figure 6 that "[m]ovement of the camera module <u>between the taking of images is measured</u> and the images are appropriately corrected to ensure that each of the images are aligned properly with one another before they are combined"); *id.*, Fig. 4 (illustrating that motion information is detected in step 412 after a previous image was captured and just before/in parallel with capturing the next image); *id.*, ¶¶25-27 (describing capturing multiple images in Figure 5 embodiment and using "movement data" from the motion sensor assembly 302 to correct the images).

268. Thus, in my opinion, the combination of Dutta and Akifumi teaches capturing at least two images (*the one or more images of the sequence of images is at least two images*). Further, when capturing each image after the first, the motion sensors measure device motion relative to the device's position when the previous image was captured (*the motion information* [*detected by the one or more motion sensors*] *represents motion of the device between capturing of consecutive images*).

11. Claim 8: The method of claim 1, wherein the vertical and horizontal shift values for an image indicate how much the image is displaced due to motion of the device during capturing of the image; Claim 21: The imaging device of claim 14, wherein the processor is configured to determine a vertical shift value and a horizontal shift value for an image such that the vertical shift value and the horizontal shift value indicate how much the image is displaced due to motion of the device during capturing of the image

269. In my opinion, the combination of Dutta and Akifumi teaches claims 8 and 21's additional limitations.

270. As I described regarding [1.3]/[14.3] (§XI.A.4(d)), the combination of Dutta and Akifumi teaches that processing engine 304 determines *vertical/horizontal shift values* for each image after the first that are used to change the "read out" position of the image in the vertical/horizontal directions. The magnitudes of these *vertical/horizontal shift values* are based on the device's motion as detected by the motion sensors and indicate how much the image has been displaced/how much correction is needed (*the vertical and horizontal shift values for an image indicate how much the image is displaced due to motion of the device during capturing of the image/the processor is configured to determine a vertical shift value and a horizontal shift value for an image such that the vertical shift value and the horizontal shift value indicate how much the image is displaced due to motion of the device during capturing of the image*).

12. Claim 9: The method of claim 1, wherein the modifying by the processor of the one or more images of the sequence of images comprises shifting a reference point in each image according to the vertical shift value and the horizontal shift value for the image in a direction that reduces the effect of motion of the device in the final video; Claim 22: The imaging device of claim 14, wherein the processor is configured to modify one or more images of the sequence of images by shifting a reference point in each image according to the vertical shift value and the horizontal shift value for the image in a direction that reduces the effect of motion of the device in the final video

271. In my opinion, the combination of Dutta and Akifumi teaches claims 9 and 22's additional limitations.

272. As I described regarding [1.3]/[14.3] (§XI.A.4(d)), the combination of Dutta and Akifumi teaches that the processing engine 304 performs correction using *vertical/horizontal shift values* calculated with the motion sensor outputs to change the "read out" position of the image in the vertical/horizontal directions. Dutta (Ex-1007), ¶¶21, 23, 28; Akifumi (Ex-1009), ¶¶41, 72, Fig. 6, Fig. 11(b). In other words, the "read out" position is the reference point for the shift.

273. Thus, in my opinion, the combination of Dutta and Akifumi teaches that processing engine uses the "read out" position in memory as a reference point and shifts that "read out" position in a direction that corrects for the motion (*the modifying by the processor of the one or more images of the sequence of images comprises shifting a reference point in each image according to the vertical shift*

value and the horizontal shift value for the image in a direction that reduces the effect of motion of the device in the final video/the processor is configured to modify one or more images of the sequence of images by shifting a reference point in each image according to the vertical shift value and the horizontal shift value for the image in a direction that reduces the effect of motion of the device in the final video).

13. Claim 10: The method of claim 1, wherein the method further comprises displaying the final video in a user interface; Claim 23: The imaging device of claim 14, wherein the device further comprises a display configured to display the final video

274. In my opinion, the combination of Dutta and Akifumi teaches claims 10 and 23's additional limitations.

275. Dutta discloses that handheld device includes a display 104 that may be used to display "any form of textual, image[,] and video information." Dutta (Ex-1007), ¶15.

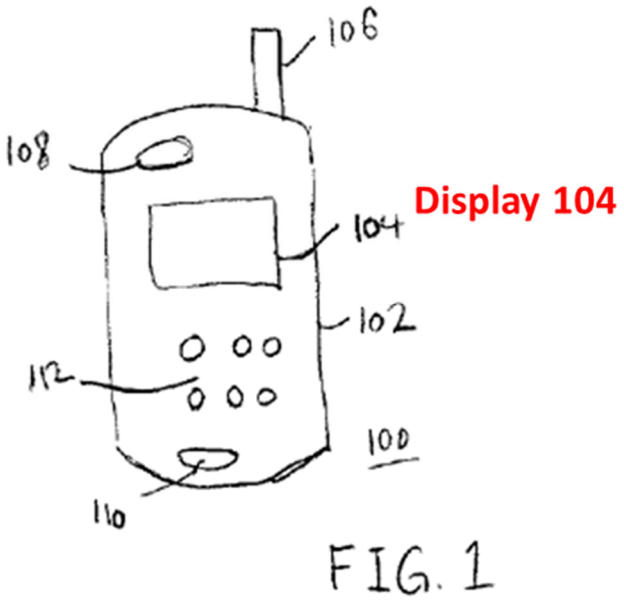

Dutta (Ex-1007), Fig. 1.

276. The display may be used to display the image that is output from Dutta's image correcting process. *Id.*, ¶¶18, 21, 23, 27, 29, Fig. 4.

277. Akifumi discloses that "the image data that is recorded by the data recording portion 16 is decompressed by the video decompressing function (local decoding function) of the video compressing portion 15, and played back on a built-in monitoring portion 22." Akifumi (Ex-1009), ¶59.

278. In addition, Akifumi discloses that "[t]his monitoring portion 22 may also be used as a monitor that displays an image of the imaging subject when capturing an image by the imaging portion 12." *Id.*

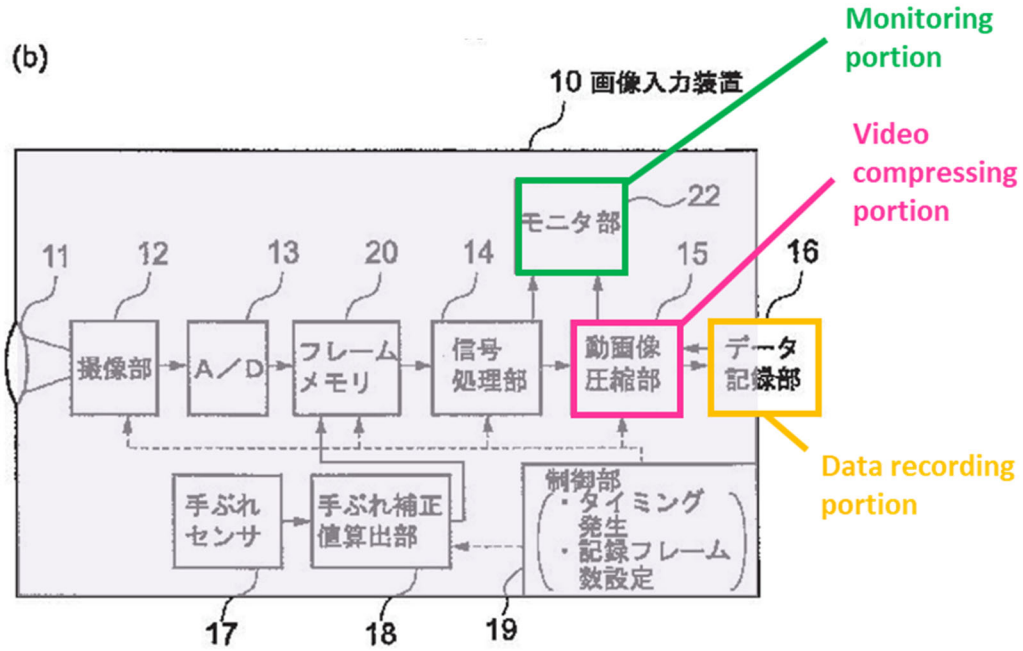

Akifumi (Ex-1009), Fig. 11(b).

279. The combination of Dutta and Akifumi therefore teaches that the final video is displayed in Dutta's handheld device's display, which in view of Akifumi, may also be a viewfinder to display previews when capturing images (*displaying the final video in a user interface/a display configured to display the final video*).

280. To the extent the "user interface"/"display" must also function as a viewfinder to display previews, in my opinion a POSITA would have been motivated to display previews of images in the combination's viewfinder when capturing video because this would allow users to verify a desired subject is in view.

14. Claim 11: The method of claim 1, wherein the method further comprises modifying the sequence of images using a video compression technique; Claim 24: The imaging device of claim 14, wherein the processor is further configured to modify the sequence of images using a video compression technique

281. As I described regarding [28.5]/[29.5] (§XI.A.4(f)), the combination of Dutta and Akifumi teaches claims 11 and 24's additional limitations.

282. Akifumi discloses that as the images are motion corrected, they are assembled into a final video that is then compressed in video compressing portion 15 (e.g., with MPEG) and recorded in data recording portion 16 for playback. Akifumi (Ex-1009), ¶¶28, 59, Fig. 11(b).

283. In view of Akifumi (*see* §XI.A.3), it is my opinion that a POSITA would have been motivated to implement compression in Dutta's processing engine 304 such that the processing engine applies video compression to the captured images (*modifying the sequence of images using a video compression technique/the processor is further configured to modify the sequence of images using a video compression technique*).

15. Claim 12: The method of claim 1, wherein determining a vertical shift value and a horizontal shift value for one or more images of the sequence of images is based at least in part on the focal distance of a lens of the imaging device; Claim 25: The imaging device of claim 14, wherein the processor is configured to determine a vertical shift value and a horizontal shift value for one or more images of the sequence of images based at least in part on the focal distance of a lens of the imaging device; Claim 31: The imaging device of claim 29, wherein the processor is configured to determine a vertical shift value and a horizontal shift value for one or more images of the sequence of images based at least in part on the focal distance of a lens of the imaging device

284. In my opinion, the combination of Dutta and Akifumi teaches claims 12, 25, and 31's additional limitations.

285. Akifumi discloses that "when a shaking sensor is used in shaking detection, the amount of shaking correction will be different depending on the state of the lens, that is, will be different depending on the *focal distance* in a system wherein a zoom lens is installed, even given the same output from the shaking sensor." Akifumi (Ex-1009), ¶13 (italics are added to this excerpt to indicate claim language). Thus, shaking correction accuracy can be improved "using…in calculating the shaking correction value, the zoom lens setting (*focal distance*) if a zoom lens is used." *Id.*, ¶25.

286. Akifumi proposes an embodiment of the imaging inputting device (Fig. 15) that references "zoom lens data and focus data, or supplementary data such as

data on the distance to the imaging subject" to calculate the shake correction value, "thereby further improving the accuracy of the shaking correction." *Id.*, ¶69.

287. The correction data input into shaking correction value calculating portion corresponds to the red arrow below.

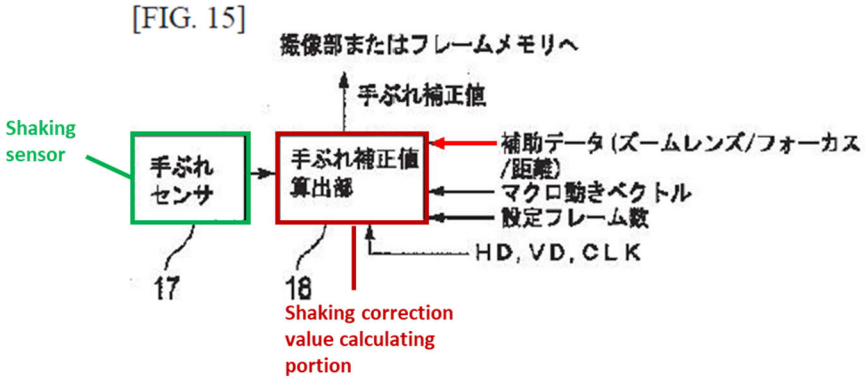

Akifumi (Ex-1009), Fig. 15.

288. Thus, in my opinion, a POSITA would have been motivated in view of Akifumi to modify Dutta to incorporate a zoom lens and for Dutta's processing engine to take the focal distance of the lens as an input when calculating the vertical/horizontal values (*vertical/horizontal shift values*) used to change the "read out" position for the corrected images (*determining a vertical shift value and a horizontal shift value for one or more images of the sequence of images is based at least in part on the focal distance of a lens of the imaging device/the processor is configured to determine a vertical shift value and a horizontal shift value for one or more images of the sequence of images based at least in part on the focal distance of a lens of the imaging device*).

289. In my opinion, including a zoom lens would have the benefit of allowing the user to frame objects more precisely without moving the device, thereby improving the user experience. Further, as Akifumi explains, accounting for the focal distance of the lens improves the accuracy of shaking correction and would result in a more stable final video. In my opinion, this would have amounted to applying a known technique (implementing a zoom lens and using focal distance in determining shift values) to a known device (the device in the combination of Dutta and Akifumi) and would have yielded predictable results (a handheld device with a zoom lens that determines the shift values based on both motion and focal distance). Further, regardless of whether a zoom lens was used, it is my opinion that a POSITA would have understood in view of Akifumi (*see, e.g.,* Ex-1009 (Akifumi), ¶¶13, 25, 69, Fig. 15) that taking the focal distance of the lens as an input when calculating the vertical/horizontal shift values would be advantageous because a POSITA would have understood that even a fixed focal distance would impact the amount of shake correction needed and should be accounted for. *See* §VII.D (citing Ex-1021 (U.S. Patent 7,619,656), 1:45-49 to confirm that it was well-known that the impact of camera motion/shake/jitter on image/video stability is directly impacted by the focal length of the lens (relative to a given image sensor size)).

16. Claim 13: The method of claim 1, wherein the method further comprises receiving user input in a user interface, and at least one of modifying one or more images of the sequential images or combining the modified images to obtain a final video is based at least in part on the user input; Claim 26: The imaging device of claim 14, wherein the device further comprises a display configured to receive user input, and the device is configured to modify one or more images of the sequential images and to obtain a final video based at least in part on the user input; Claim 32: The imaging device of claim 29, wherein the device further comprises a display configured to receive user input, and the device is configured to modify one or more images of the sequential images and to obtain a final video based at least in part on the user input

290. In my opinion, the combination of Dutta and Akifumi teaches claims 13, 26, and 32's additional limitations.

291. Dutta discloses that the handheld device includes a display 104 and a keyboard 112. Dutta (Ex-1007), ¶15. "For example, the keyboard 112 comprises buttons to power on and off the handheld device 100, to activate specific features of the handheld device 100, and to dial telephone numbers." *Id.*

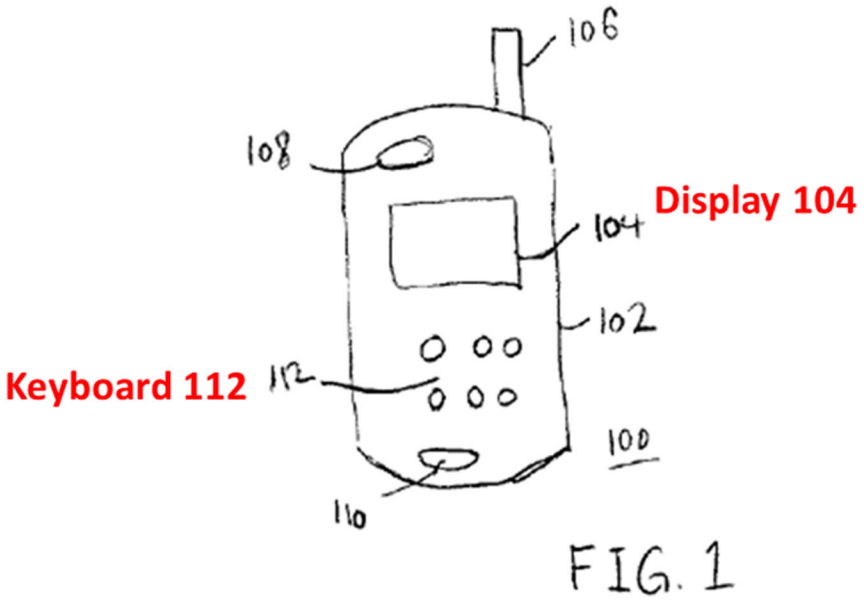

Dutta (Ex-1007), Fig. 1.

292. Dutta further discloses in step 410 of Figure 4 that determining whether capturing and correcting images of an object is complete can be done "manually, such as ascertaining whether the user has entered an instruction with the keyboard that no new images are to be taken." *Id.*, ¶23.

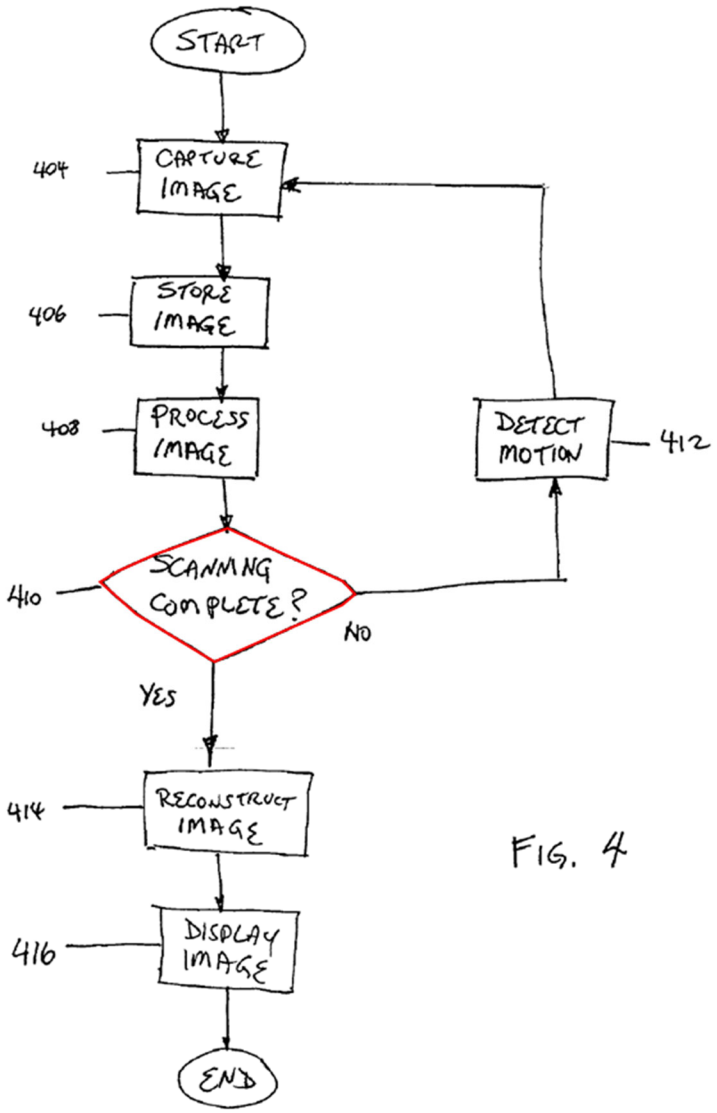

Dutta (Ex-1007), Fig. 4.

293. Akifumi discloses that a user can set the recording frame rate either directly or by setting the pixel count, which determines whether all or only a subset of the captured images are motion corrected. Akifumi (Ex-1009), ¶19 ("means for setting, a frame rate, that is, a number of frames to be recorded per-unit-time by the recording means, through an instruction from the user, may be provided"), ¶30

(disclosing that controlling portion 19 of Fig. 1—which is also present, for example, in Figures 6 and 11(a)/(b)—has "a function wherein the setting for the recording frame rate (the number of frames recorded) can be set based on an instruction from a user"), ¶57 (disclosing that in an alternative embodiment shown in Figs. 10(a)/(b) that instead includes controlling portion 21, "the user is able to set the recording frame rate through selecting the size of the image to be recorded (the recording pixel count), without having to think about the recording frame rate").

294. In my opinion, a POSITA would have been motivated to combine Dutta and Akifumi to allow the user to provide input that indirectly controls which captured images will be modified/combined into a final video to give users more control over the image capture process and battery consumption. §VII.C (citing Ex-1008 (Creative Camcorder), 11; Ex-1011 (Hara), ¶¶55, 109; Ex-1043, 4; and Ex-1044 to confirm that a POSITA would have recognized that a user would want to conserve battery life where possible). Further, in my opinion, this would have amounted to applying a known technique (providing the user the ability to indirectly control the images that are modified/combined through user input) to a known device (the device in the combination of Dutta and Akifumi) and would have yielded predictable results (a handheld device that accounts for user input that indirectly controls the images that are modified/combined).

295. Thus, in my opinion, the combination of Dutta and Akifumi teaches a handheld device that includes a keyboard and allows the user to interact with a display (*display/user interface*) to provide input that impacts whether images will continue to be captured/corrected/combined and further allows the user to set the recording frame rate, which allows the user to control—indirectly—which captured images will be modified/combined into a final video (*receiving user input in a user interface, and at least one of modifying one or more images of the sequential images or combining the modified images to obtain a final video is based at least in part on the user input/a display configured to receive user input, and the device is configured to modify one or more images of the sequential images and to obtain a final video based at least in part on the user input*).

B. 1B: Dutta (Ex-1007), Akifumi (Ex-1009), and Creative Camcorder (Ex-1008) (Claims 13, 26, and 32)

1. Creative Camcorder (Ex-1008)

296. Creative Camcorder describes Canon's ES2000 video camera. Creative Camcorder (Ex-1008), 10.

Creative Camcorder (Ex-1008), 10.

297. Creative Camcorder discloses that "ES2000 offers an image-stabilization system" that "compensate[s] for different kinds of motion." Creative Camcorder (Ex-1008), 10. Creative Camcorder further discloses using a "0.55-inch color LCD" viewfinder, which "provides several important pieces of information and includes a zoom meter as well as icons to indicate the exposure and focusing modes, and whether…image-stabilization [is] on and off." *Id.*, 11.

2. Motivation to Combine Dutta (Ex-1007), Akifumi (Ex-1009), and Creative Camcorder (Ex-1008)

298. In my opinion, a POSITA would have been motivated to combine Dutta, Akifumi, and Creative Camcorder for multiple reasons.

299. First, these references relate to image/video processing and describe techniques for correcting/compensating for camera motion/shake during image capture. *See, e.g.*, Dutta (Ex-1007), Abstract ("The handheld device is moved so that the camera module takes a plurality of images of an object. A motion sensor assembly in the handheld device detects motion of the handheld device and movement information from the motion sensor assembly is used to modify each of the plurality of images to remove distortions therein caused by movement of the camera module."), ¶6, ¶¶17-22 (describing Fig. 3), ¶¶23-24 (describing Fig. 4), ¶¶25-27 (describing Fig. 5), ¶¶28-29 (describing Fig. 6); Akifumi (Ex-1009), ¶15 ("The object of the present invention is to provide an image inputting device that is able to carry out shaking correction effectively even when the recording frame rate is less than the frame rate of the image signal that is outputted from the imaging element."); Creative Camcorder (Ex-1008), 10-11.

300. Second, this combination would have improved the device in the combination of Dutta and Akifumi by enabling control over whether to use image stabilization. For example, enabling the user to turn on/off image stabilization would have allowed finer control over power consumption/battery usage, allowing users to capture unstabilized video if desired. §VII.C (citing Ex-1008 (Creative Camcorder), 11; Ex-1011 (Hara), ¶¶55, 109; Ex-1043, 4; and Ex-1044 to confirm that a POSITA

would have recognized that a user would want to conserve battery life where possible).

301. Third, the combination would have amounted to applying known techniques/features disclosed in Creative Camcorder (viewfinder, touch controls) to the imaging device in the combination of Dutta and Akifumi, which would have yielded predictable results (e.g., enabling users to turn on/off image stabilization). In my opinion, a POSITA would also have had a reasonable expectation of success in making the combination because it would merely have required a setting that allowed the user to turn on/off the stabilization that was controlled by user input features already present in the device.

3. Claim 13: The method of claim 1, wherein the method further comprises receiving user input in a user interface, and at least one of modifying one or more images of the sequential images or combining the modified images to obtain a final video is based at least in part on the user input; Claim 26: The imaging device of claim 14, wherein the device further comprises a display configured to receive user input, and the device is configured to modify one or more images of the sequential images and to obtain a final video based at least in part on the user input; Claim 32: The imaging device of claim 29, wherein the device further comprises a display configured to receive user input, and the device is configured to modify one or more images of the sequential images and to obtain a final video based at least in part on the user input

302. In my opinion, the combination of Dutta, Akifumi, and Creative Camcorder teaches claims 13, 26, and 32's additional limitations.

303. Creative Camcorder discloses an ES2000 video camera with a viewfinder that provides information regarding zoom, exposure/focus, and whether image stabilization is on/off. Creative Camcorder (Ex-1008), 10-11. Thus, in my opinion, a POSITA would have understood the user provides input to the display via buttons or the joystick on the device in order to turn on/off image stabilization.

304. Thus, for the reasons I described in §XI.B.2, it is my opinion that a POSITA would have been motivated to combine Dutta, Akifumi, and Creative Camcorder such that the handheld *imaging device* included an option for the user to provide input to a display to turn image stabilization on/off, which controls whether images forming a video are modified/stabilized (*receiving user input in a user interface, and at least one of modifying one or more images of the sequential images or combining the modified images to obtain a final video is based at least in part on the user input/a display configured to receive user input, and the device is configured to modify one or more images of the sequential images and to obtain a final video based at least in part on the user input*).

C. 1C: Dutta (Ex-1007), Akifumi (Ex-1009), and Balmer (Ex-1010) (Claim 27)

1. Balmer (Ex-1010)

305. Balmer discloses a multi-processing system that handles image processing and graphics and allows for any number of synchronous processors.

Balmer (Ex-1010), 3:36-42, 60:49-52. Balmer enables "additional computing power and faster calculation times." *Id.*, 2:26-27.

306. In my opinion, a POSITA would have known that additional processing power would help execute parallel tasks, improve usability for large-scale applications, and add redundancy if a processor failed.

307. Balmer's Figure 1 shows the image processing system.

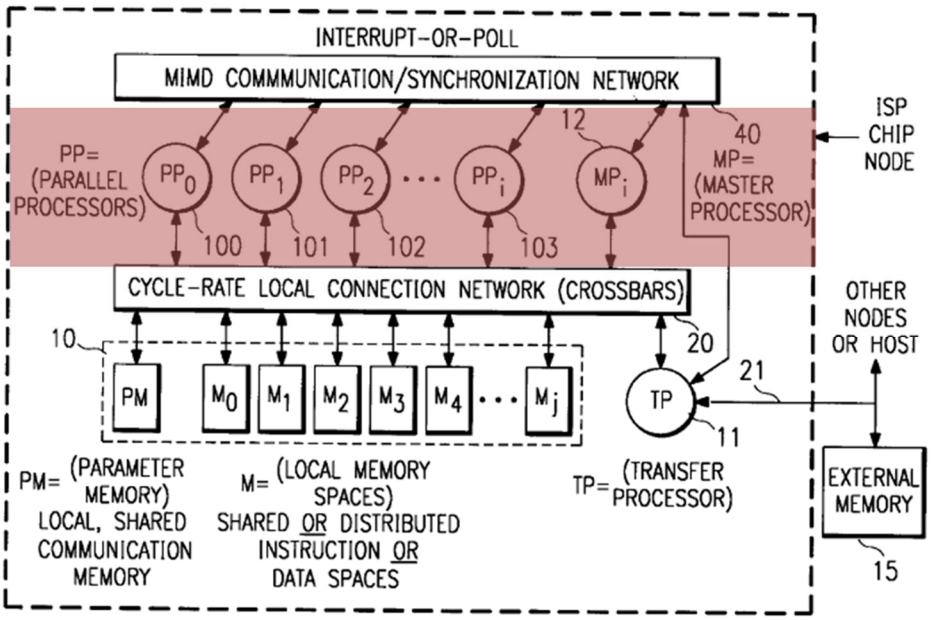

FIG. 1

Balmer (Ex-1010), Fig. 1; *see also* Figs. 2-3.

308. Balmer's Figure 53 shows imaging system 5310, which processes image data and includes processor 5316. *Id.*, 30:2-14.

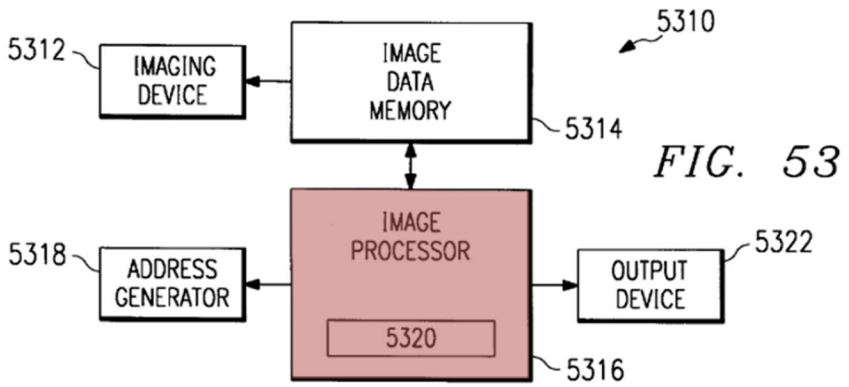

Balmer (Ex-1010), Fig. 53.

309. Imaging system 5310 includes an imaging device 5312, "such as a video camera" that "capture[s] images," where image processor 5316 "performs signal processing functions including statistical processes on the" captured images. *Id.*, 30:2-14, 58:17-42, Fig. 58.

2. Motivation to Combine Dutta (Ex-1007), Akifumi (Ex-1009), and Balmer (Ex-1010)

310. In my opinion, a POSITA would have been motivated to implement the processing engine in the combination of Dutta and Akifumi as multiple processors in view of Balmer. A POSITA would have been motivated to make this combination for several reasons.

311. First, Balmer, like Dutta and Akifumi, analyzes and processes image/video data. *See, e.g.*, Dutta (Ex-1007), Abstract ("The handheld device is moved so that the camera module takes a plurality of images of an object. A motion

sensor assembly in the handheld device detects motion of the handheld device and movement information from the motion sensor assembly is used to modify each of the plurality of images to remove distortions therein caused by movement of the camera module."), ¶6, ¶¶17-22 (describing Fig. 3), ¶¶23-24 (describing Fig. 4), ¶¶25-27 (describing Fig. 5), ¶¶28-29 (describing Fig. 6); Akifumi (Ex-1009), ¶15 ("The object of the present invention is to provide an image inputting device that is able to carry out shaking correction effectively even when the recording frame rate is less than the frame rate of the image signal that is outputted from the imaging element."); Balmer (Ex-1010), Abstract ("A multi-processor system arranged, in one embodiment, as an image and graphics processor."), 30:2-7 ("FIG. 53 shows an imaging system 5310 operable to process image data using combinations of various processing algorithms. An imaging device 5312, such as a video camera, a still image camera, a bar code reader and the like, is used to capture images and provides them to an image data memory 5314.").

312. Second, in my opinion, a POSITA would have looked to Balmer to implement a multi-processor architecture in the *imaging device* in the combination of Dutta and Akifumi because such an architecture would result in a device that can perform the video processing more efficiently and faster. Balmer, 2:30-37 ("[I]maging systems are prime candidates for multi-processing.").

313. Third, in my opinion, a POSITA would have recognized that an *imaging device* with a multi-processor architecture would have been more powerful, and that this would have improved the processing performance for computationally intensive video processing tasks.

314. Fourth, in my opinion, this would have amounted to applying a known technique (multiple processors for processing image data) to a known device (the handheld *imaging device* in the combination of Dutta and Akifumi) to achieve predictable results (an *imaging device* with multiple processors configured to process image data and produce stabilized videos). The results would have been predictable and a POSITA would have had a reasonable expectation of success in making the combination because, as I explained previously and as Balmer confirms, it was well-known to perform image processing tasks, including for video applications, on multiple processors (e.g., separate processor chips or a single chip with multiple processors) to enable parallel (and thus, faster) processing. §VII.A (explaining that parallel processors were well-known in the prior art and citing Ex-1018 (US Patent Pub. 2001/0041012), ¶¶17, 20, 21; Ex-1019 (U.S. Patent 7,274,390), 1:9-22, 1:54-67, 2:1-5, 4:6-18; and Ex-1010 (Balmer), 2:30-37, 3:36-42, 30:2-14, 58:17-42, 60:49-52, 62:22-27, Figs. 1-2, 10, 53, 58).

3. Claim 27: The imaging device of claim 14, wherein the processor is two or more processors

315. In my opinion, the combination of Dutta, Akifumi, and Balmer teaches claim 27's additional limitations.

316. Balmer discloses a multi-processor system for processing video data. Balmer (Ex-1010), 3:36-42, 30:2-14, 58:17-42, 60:49-52, 62:22-27, Figs. 1-2, 10, 53, 58.

317. Given Balmer, it is my opinion that a POSITA would have been motivated to implement the processing engine in the combination of Dutta and Akifumi as multiple processors (*wherein the processor is two or more processors*) for the reasons I described in §XI.C.2.

XII. CONCLUSION

318. The findings and opinions in this declaration are based on my work and examinations to date.

319. My analysis may continue, and I may form additional or new opinions if additional information or insights are made available, or upon further consideration.