UNITED STATES PATENT AND TRADEMARK OFFICE

BEFORE THE PATENT TRIAL AND APPEAL BOARD

MICROSOFT CORPORATION,
Petitioner,

v.

QOMPLX LLC,
Patent Owner.

Case IPR2026-00182
Patent 12,218,934

EXHIBIT 2023

DECLARATION OF SAM MALEK, PH.D.

TABLE OF CONTENTS

Page

I. INTRODUCTION 1

II. QUALIFICATIONS 1

III. BASES OF OPINIONS 7

IV. APPLICABLE LEGAL STANDARDS 12

A. Level Of Ordinary Skill In The Art 12

B. My Understanding Of Legal Standards 14

V. CLAIMS-AT-ISSUE (CLAIMS 1-30) 17

VI. OPINIONS 17

A. "Multidimensional Time-Series Database" (All Claims, All Grounds). 17

1. Petitioner's Implicit Construction Is Not Supported By Intrinsic Or Extrinsic Evidence 18

2. There Is No Reason To Believe That Kirti's Repository Is Optimized Or Especially Suited For Time-Series Data. 22

B. "Determining Whether The Additional Verification Is Required To Grant Access" After "Receiv[ing] A Request To Authenticate A Client" (All Claims, All Grounds). 23

1. The Order Of The Claims. 23

2. Kirti's System Determines Whether A Remediation Action Is Appropriate When It Retrieves Activity Data In Scheduled Batches, Not In Response To Receiving A Request To Authenticate A Client. 27

3. Kirti Does Not Determine Whether Additional Verification Is Required "To Grant Access" In Response To Receiving A Request To Authenticate. 29

C. "Selecting The Additional Verification Method From A Plurality Of Verification Methods" (All Claims, All Grounds). ..31

1. Kirti's Remediation Actions Are Not Verification Methods (Grounds 1 & 3).....32

2. Kirti-Coffin Does Not Teach Selecting An Additional Verification Method (Grounds 2 & 4).....35

VII. CONCLUSION.....42

Qomplx LLC, Exhibit 2023
Page 2023 - 3
IPR2026-00182, Microsoft Corp. v. Qomplx LLC

I. INTRODUCTION

1. My name is Sam Malek. I have been retained as an expert witness to provide my independent opinion in regard to the matters at issue in *inter partes* review of IPR2026-00182 and IPR2026-00184. I have been retained by Qomplx LLC ("Qomplx"), the Patent Owner in the above proceedings. Petitioner is Microsoft Corporation. ("Microsoft" or "Petitioner").

2. I am being compensated $800 per hour for my time spent working in connection with this case. My compensation is in no way related to the outcome of this litigation. If called as a witness, I would testify as to the statements and opinions contained in this report.

3. I am not a legal expert and offer no opinions on the law. However, I have been informed by counsel of the various legal standards that apply, and I have applied those standards in arriving at my conclusions.

II. QUALIFICATIONS

4. I have more than 25 years of experience in the field of computer science and software engineering. My professional career has been dedicated to issues relating to software design and architecture, including cloud computing architectures, distributed software systems, and software security.

5. I received a Bachelor of Science in Information and Computer Science from the University of California, Irvine in 2000, a Master of Science in

Computer Science from the University of Southern California in 2004, and a Ph.D. in Computer Science from the University of Southern California in 2007. My Ph.D. dissertation, titled "A User-Centric Approach for Improving a Distributed Software System's Deployment Architecture," concerned distributed software systems and specifically resulted in new algorithms and an architectural middleware for effective deployment of a component-based software system among a distributed set of computing nodes.

6. I am a Professor of Software Engineering in the School of Information and Computer Sciences at the University of California, Irvine ("UCI"). I joined the Department of Informatics at UCI as an associate professor in 2015 and was promoted to full professor with tenure in 2019. As a member of the faculty, I perform research, teach graduate and undergraduate courses in software architecture, design, and engineering, and supervise the research of postdoctoral associates and other students. I have taught software engineering and computer science courses in which I frequently cover topics related to the technologies at issue in this case, including data storage, distributed systems, software security, encryption, authentication, and verification.

7. Before my role at UCI, I taught at George Mason University, where I was an Associate Professor in the Computer Science Department from 2007 to

2015. Prior to that, I spent four years as a researcher at the University of Southern California, also focusing on software engineering and computer science.

8. Outside of teaching, I have held several leadership roles at various labs and research centers. For example, I currently serve as Director of the Software Engineering and Analysis Laboratory ("SEAL") at UCI. SEAL is a lab engaged in research to automate software engineering activities. In particular, the lab focuses on the development of techniques and tools that aid with the construction, analysis, and maintenance of large-scale and dependable software systems. Additionally, from 2018 to 2022, I served as Director of the Institute for Software Research at UCI. The software systems and results produced in these research laboratories have been adopted for use by various private and public-sector organizations, including Boeing, Robert Bosch GmbH, the National Aeronautics and Space Administration ("NASA"), Department of Homeland Security ("DHS"), and the Federal Bureau of Investigations ("FBI").

9. I have also served as the principal investigator of several federally funded research projects totaling more than 12 million dollars. For example, I led a team of researchers in a project sponsored by the United States Defense Advanced Research Projects Agency ("DARPA") to develop a novel approach for protecting Android applications from Inter-Process Communication ("IPC") security attacks. In another project sponsored by the Air Force Office of Scientific

Research, I developed a framework that monitors, organizes, and dynamically adapts distributed systems to ensure they continue operating effectively, even under conditions of impairment. A central focus of this project required ensuring the secure storage of mission-critical data in cloud environments. I also worked with NASA to develop a new distributed software system for sharing large amounts of data generated by NASA.

10. I have significant industry experience as a software engineer, software architect, and programmer at companies such as the Boeing Company (2005 to 2007), PriceWaterhouseCoopers Consulting (later acquired by IBM) (2000 to 2002), FieldCentrix (1999 to 2000), and Neural Computing Systems Lab (1998 to 1999). During my time in industry, I gained experience in the design, development, and management of large-scale software engineering efforts, including the development of systems that securely stored and retrieved large volumes of data in distributed environments. For example, while at Boeing, I was part of a team that designed autonomous aerial platforms, which were designed to provide real-time data transmission to remote operators and background servers. I also contributed to the development of solutions for securely transmitting and storing the data generated by such platforms on cloud-like military systems.

11. I am the author and co-author of close to 150 peer-reviewed articles. These publications have been cited more than 12,000 times according to Google

Scholar (scholar.google.com). Many of those publications relate to security and software architecture, including: "Forecasting Architectural Decay from Evolutionary History," IEEE Transactions on Software Engineering (TSE), Vol. 32, No. 3, April 2023; Security and Software Engineering in Handbook of Software Engineering, Editors Kyo Chul Kang, Richard Taylor, and Sungdeok Cha, 2019; and "A Taxonomy and Qualitative Comparison of Program Analysis Techniques for Security Assessment of Android Software," IEEE Transactions on Software Engineering (TSE), Vol. 43, No. 6, June 2017.

12. I serve, or have served, as chair, committee member, or reviewer for more than 150 software engineering journals, magazines, and conferences. For example, I have served as associate editor of the Institute of Electrical and Electronics Engineers ("IEEE") Transactions on Software Engineering and Methodology, Association for Computing Machinery ("ACM") Transactions on Autonomous and Adaptive Systems, and the Springer Journal of Computing. I am currently the Deputy Editor-in-Chief of the Springer Journal of Automated Software Engineering. In these roles I have refereed hundreds of articles submitted by the scientific community that deal with topics related to the technologies at issue in this case, including cloud storage, data security, and encryption.

13. I have received numerous awards for my work and research in the field of software architecture and computer science, including: The ACM

SIGSOFT Distinguished Paper Award at the International Conference of Software Engineering (2025); the Test of Time Award from the Association for Computing Machinery (2020); the CAREER award from the National Science Foundation (2013); the Emerging Researcher/Scholar/Creator Award from George Mason University (2013); the Outstanding Faculty Research Award from George Mason University (2011).

14. I have spoken on information security and software architecture issues at more than 60 scientific conferences, workshops, and symposia. For example, in 2020, I was invited by the Association for Computing Machinery to give a presentation entitled "The Threat in Your Pocket: Trends, Challenges, and Solutions in Mobile Application Security." I also presented talks such as "Tools for Automated Detection and Assessment of Security Vulnerabilities in Mobile Applications" to the DHS's Cyber Security Division R&D Showcase and Technical Workshop.

15. A detailed record of my professional qualifications is set forth in the attached Exhibit A, which is my *curriculum vitae*, including a list of publications, awards, research grants, and professional activities. My *curriculum vitae* also lists the matters in which I have served as an expert.

III. BASES OF OPINIONS

16. In the course of conducting my analysis and forming my opinions, I have reviewed materials including those listed below:

i. U.S. Patent No. 12,218,934 (Ex. 1001) ("the '934 patent" or "'934");

ii. The prosecution history of the '934 Patent (Ex. 1002)

iii. The Declaration signed by Dr. John Black in IPR2026-00182 (Ex. 1003) (the "Black Declaration");

iv. The Petition by Microsoft in IPR2026-00182;

v. U.S. Patent No. 10,063,654 ("Kirti") (Ex. 1004);

vi. David Coffin, *Expert Oracle and Java Security: Programming Secure Oracle Database Applications with Java*, Apress (2011) ("Coffin") (Ex. 1005);

vii. U.S. Patent No. 8,572,391 ("Golan") (Ex. 1006);

viii. U.S. Patent No. 7,979,899 ("Guo") (Ex. 1007);

ix. International Publication No. WO 2015/109947 ("Zhang") (Ex. 1008);

x. U.S. Patent No. 8,312,540 ("Kahn") (Ex. 1009);

xi. U.S. Patent No. 10,021,108 ("Mankovskii") (Ex. 1010);

xii. U.S. Patent No. 7,908,645 ("Varghese") (Ex. 1011);

xiii. U.S. Patent Application Pub. No. 2007/0079135 ("Saito") (Ex. 1012);

xiv. U.S. Patent No. 9,237,143 ("Dotan") (Ex. 1014);

xv. U.S. Patent No. 9,148,424 ("Yang") (Ex. 1015);

xvi. U.S. Patent No. 9,319,419 ("Sprague") (Ex. 1016);

xvii. U.S. Patent Application Pub. No. 2008/0249947 ("Potter") (Ex. 1017);

xviii. International Pub. No. WO 2015/158874 ("Enqvist") (Ex. 1018);

xix. U.S. Patent No. 5,774,525 ("Kanevsky") (Ex. 1019);

xx. Olli Jarva, *Intelligent Two-Factor Authentication: Deciding Authentication Requirements Using Historical Context Data*, Aalto Univ. (May 13, 2014) (Ex. 1020);

xxi. U.S. Patent No. 9,298,890 ("Bajenov") (Ex. 1021);

xxii. Affidavit of Mina Ching dated October 14, 2025 ("Azure Wayback") (Ex. 1022);

xxiii. U.S. Patent No. 9,955,349 ("McClintock") (Ex. 1023);

xxiv. U.S. Patent No. 11,184,766 ("Lord") (Ex. 1024);

xxv. U.S. Patent No. 11,184,392 ("Thomas") (Ex. 1025);

xxvi. U.S. Patent No. 9,160,726 ("Kaufman") (Ex. 1026);

xxvii. U.S. Patent No. 9,122,866 ("Kolman") (Ex. 1027);

xxviii. U.S. Patent Application Pub. No. 2003/0115142 ("Brickell") (Ex. 1028);

xxix. U.S. Patent Application Pub. No. 2014/0208419 ("Chang") (Ex. 1029);

xxx. U.S. Patent Application Pub. No. 2018/0189470 ("Kim") (Ex. 1030);

xxxi. U.S. Patent Application Pub. No. 2014/0289833 ("Briceno") (Ex. 1031);

xxxii. U.S. Patent Application Pub. No. 2016/0191512 ("Tatourian") (Ex. 1032);

xxxiii. U.S. Patent Application Pub. No. 2015/0150090 ("Carroll") (Ex. 1033);

xxxiv. U.S. Patent Application Pub. No. 2017/0063896 ("Muddu") (Ex. 1035);

xxxv. U.S. Patent No. 10,432,605 ("Lester") (Ex. 1035);

xxxvi. U.S. Patent Application Pub. No. 2010/0211996 ("McGeehan") (Ex. 1036);

xxxvii. U.S. Patent No. 9,779,236 ("Abrams") (Ex. 1037);

xxxviii. U.S. Patent No. 9,639,678 ("Moore") (Ex. 1038);

xxxix. U.S. Patent No. 9,648,034 ("Bailey") (Ex. 1039);

xl. U.S. Patent Application Pub. No. 2018/0027006 ("Zimmermann") (Ex. 1040);

xli. Shammi Ishara Hewamadduma, *Detection and Prevention of Possible Unauthorized Login Attempts Through Stolen Credentials from a Phishing Attack in an Online Banking System*, IEEE Int'l Conf. on Rsch. and Innovation in Info. Sys., at 13-18 (ICRIIS 2017) ("Hewamadduma") (Ex. 1041);

xlii. U.S. Patent No. 8,266,682 ("Lee") (Ex. 1042);

xliii. U.S. Patent No. 9,397,996 ("Roskind") (Ex. 1043);

xliv. Affidavit of Mina Ching dated November 14, 2025 ("Phone Factor + Oracle Wayback") (Ex. 1044);

xlv. Rajkumar Buyya, et al., *Cloud Computing Principles and Paradigms*, Wiley (2011) ("Buyya NPL")

xlvi. U.S. Patent No. 9,448,852 ("Vemulapalli") (Ex. 1046);

xlvii. Ilia Pietri and Rizos Sakellariou, *Mapping Virtual Machines onto Physical Machines in Cloud Computing: A Survey*, ACM Computing Surveys, Vol. 49, No. 3, Article 49 (Oct. 2016) ("Pietri") (Ex. 1047);

xlviii. Declaration of Ingrid Hsieh-Yee dated December 16, 2025 (Ex. 1048);

xlix. Affidavit of Mina Ching dated November 14, 2025 ("Coffin Wayback") (Ex. 1049);

l. Lucas Jellema, *Just Launched: The Oracle Identity Cloud Service –for Authentication and Authorization Across the Cloud and on Premises*, AMIS Tech. Blog (Nov. 2, 2016) (Ex. 1050);

li. John Ribeiro, *Oracle Will Acquire Cloud Security Vendor Palerra*, FoundryCo, Inc. (Sep. 18, 2016) (Ex. 1051);

lii. Sarah Kuranda, *Oracle Acquires Cloud Access Security Brokerage Startup Palerra*, The Channel Co. (Sep. 19, 2016) (Ex. 1052);

liii. *Hiding in Plain Sight: How a Cloud Access Security Broker With Built-In User Behavior Analytics Unmasks Insider Threats in the Cloud*, Oracle (Ex. 1053);

liv. Ganesh Kirti, *Dealing With Dropbox: Unmasking Hackers With User Behavior Analytics*, Cloud Sec. Alliance (Sep. 7, 2016) (Ex. 1054);

lv. Mitch Wagner, Oracle Buys Palerra to Boost Cloud Security, Informa TechTarget (Sep. 18, 2016) (Ex. 1055);

lvi. Complaint, *Qomplx LLC v. Microsoft Corp.*, Case No. 1:25-cv-01383-ADA (W.D. Tex.) (Aug. 8, 2025) (Ex. 1057);

lvii. Affidavit of Mina Ching dated December 12, 2025 ("2016 White Paper") (Ex. 1058);

lviii. U.S. Patent No. 10,742,647 ("Crabtree 647") (Ex. 1059);

lix. Guohui Wang and T.S. Eugene Ng, *The Impact of Virtualization on Network Performance of Amazon EC2 Data Center*, IEEE INFOCOM 2010, at 1163-1171 (Mar. 2010) ("Wang NPL") (Ex. 1060);

lx. U.S. Patent Application Pub. No. 2011/0314558 ("Song") (Ex. 1061);

lxi. U.S. Patent No. 11,218,474 ("Crabtree 474") (Ex. 1062);

lxii. U.S. Patent Application Pub. No. 2015/0319185 ("Kirti App.") (Ex. 1063);

lxiii. Patent Comparison Chart (Ex. 1065);

lxiv. Affidavit of Mina Ching dated December 24, 2025 ("APress-Coffin") (Ex. 1066);

lxv. The exhibits and other documents cited herein.

IV. APPLICABLE LEGAL STANDARDS

A. Level Of Ordinary Skill In The Art

17. My opinions in this declaration are based on the understandings of a person of ordinary skill in the art, which I understand is sometimes referred to as an "ordinary artisan" or by the acronyms "POSITA" or "PHOSITA," as of the time of the invention, which I understand is here assumed by Microsoft to be the effective filing date (October 19, 2017) of the provisional application. Pet., 11. For the purposes of this declaration only, I accept Microsoft's asserted earliest effective filing date. I reserve the right to revisit the issue should the Petition be

instituted. I understand that the person of ordinary skill in the art is a hypothetical person who is presumed to have known the relevant art at the time of the invention. By "relevant," I mean relevant to the challenged claims of the '934 patent.

18. I understand that factual indicators of the level of ordinary skill in the art include the various prior art approaches employed, the types of problems encountered in the art, the rapidity with which innovations are made, the sophistication of the technology involved, and the educational background of those actively working in the field. I understand that, in assessing the level of skill of a person of ordinary skill in the art, one should consider the type of problems encountered in the art, the prior solutions to those problems found in the prior art references, the rapidity with which innovations are made, the sophistication of the technology, the level of education of active workers in the field, and my own experience working with those of skill in the art at the time of the invention.

19. In this case, Dr. Black has asserted in his declaration that a person of ordinary skill in the art as of the time of the '934 patent would have had:

> a bachelor's degree in computer science, or equivalent, with two to four years' experience designing, implementing, or otherwise working with cybersecurity technologies. More education, e.g., a Master's or Ph.D., would compensate for less work experience and vice versa.

Ex. 1003 [Black Decl.] ¶ 35.

20. For the purposes of this declaration, I accept Dr. Black's proposed qualifications of a POSITA. I reserve the right to revisit the issue should the Petition be instituted.

21. As further discussed below, my opinions as stated in this declaration are valid even if the Board adopts a somewhat higher or somewhat lower level of ordinary skill in the art. For example, as will be discussed throughout my report, even a person with the level of knowledge or experience described by Dr. Black or adopted by the Board as described above would not have a reasonable expectation of success in implementing certain aspects of the proposed combination as of the priority date of the '934 patent.

B. My Understanding Of Legal Standards

22. When considering the '934 patent and stating my opinions, I rely on the following legal standards as described to me by the attorneys for Qomplx.

23. I understand that a patent claim is unpatentable if the claimed invention was anticipated by a prior art reference or would have been obvious to a person of ordinary skill in the art at the time of the purported invention.

24. I understand that anticipation requires that every limitation of the claim at issue be disclosed, either expressly or under principles of inherency, in a single prior art reference.

25. I understand that inherency may not be established by probabilities or possibilities. The mere fact that a certain thing may result from a given set of circumstances is not sufficient. Instead, it must be proved that the claim limitation not expressly found in the reference necessarily follows from what is found there.

26. I understand that an obviousness analysis involves comparing a claim to the prior art to determine whether the claimed invention would have been obvious to a person of ordinary skill in the art at the time of the invention in view of the prior art and in light of the general knowledge in the art as a whole. I also understand that obviousness is ultimately a legal conclusion based on underlying facts of four general types, all of which must be considered: (1) the scope and content of the prior art; (2) the level of ordinary skill in the art; (3) the differences between the claimed invention and the prior art; and (4) any objective indicia of non-obviousness, including any praise of the invention.

27. I also understand that obviousness may be established under certain circumstances by combining or modifying the teachings of the prior art. Specific teachings, suggestions, or motivations to combine any first prior art reference with a second prior art reference can be explicit or implicit, but must have existed before the date of purported invention. I understand that prior art references themselves may be one source of a specific teaching or suggestion to combine features of the prior art, but that such suggestions or motivations to combine art

may come from the knowledge that a person of ordinary skill in the art would have had.

28. I understand that a reference may be relied upon for all that it teaches, including uses beyond its primary purpose, but also including teachings that lead away from the invention. I understand that a reference may be said to teach away when a person of ordinary skill, upon reading the reference, would be discouraged from following the path set out in the reference, although the mere disclosure of alternative designs does not teach away.

29. I further understand that whether there is a reasonable expectation of success in combining references in a particular way is also relevant to the analysis.

30. I understand that it is improper to use hindsight to combine references or elements of references to reconstruct the invention using the claims as a guide. My analysis of the prior art is made from the perspective of a person of ordinary skill in the art at the time of the invention.

31. I am not offering any legal opinions in this declaration nor am I qualified to do so. I only consider such legal standards in framing my opinions and conclusions as well as placing assertions made by Petitioner in the Petition into the proper context. Additionally, from a subject matter perspective, I understand that the petitioner always has the burden of persuasion regarding a challenge of patentability of an invention under an inter partes review.

V. CLAIMS-AT-ISSUE (CLAIMS 1-30)

32. I understand that Petitioner has challenged independent claims 1 and 11 and their respective dependents based on the grounds below:

- Claims 1-30 based on obviousness over Kirti (Ground 1);
- Claims 1-30 based on obviousness over Kirti and Coffin (Ground 2);
- Claims 10, 25 based on obviousness over Kirti and Vemulapalli (Ground 3);
- Claims 10, 25 based on obviousness over Kirti, Coffin, and Vemulapalli (Ground 4).

VI. OPINIONS

A. "Multidimensional Time-Series Database" (All Claims, All Grounds).

33. Claim 1 requires:

> Limitation [1.3] "store, in a multidimensional time-series database, information about the request,"
>
> Limitation [1.6] "retrieving, from the multidimensional time-series database, historical information about previous access requests associated with the user account, and"

1. Petitioner's Implicit Construction Is Not Supported By Intrinsic Or Extrinsic Evidence.

34. I understand that Petitioner and Dr. Black map the "multidimensional time-series database" to Kirti's analytics as threat intelligence repository database as follows:

> Kirti's analytics and threat intelligence repository database is a multidimensional time-series database. It is multidimensional because each time point includes activity data for multiple parameters/attributes (e.g., IP address, login attempt result (success or failure), identifier (e.g., username), resources accessed, etc.). EX1004, 4:46-5:3, 10:25-50, 10:60-11:4, 12:1-18, 12:35-13:29, 13:44-59, 14:48-54, 16:28-40, 16:55-67, 17:9-55, 18:9-23, 18:38-41). And it is a time-series database at least because it includes the same activity data (i.e., values for the same parameters/attributes) for multiple time points. *E.g.*, EX1004, 13:27-30 ("[D]ata collected over time is used to build models of normal behavior (e.g., patterns of events and activity) and flag behavior that deviates from normal as abnormal behavior.").

Pet., 31-32; Ex. 1003 [Black Decl.] ¶ 87. As can be seen above, Petitioner and Dr. Black argue that Kirti's repository is (i) multidimensional "because each time point includes activity data for multiple parameters/attributes" and is (ii) a time-series database "because it includes the same activity for multiple time points." Consequently, Petitioner and Dr. Black's analysis implicitly assumes that a "multidimensional time-series database" is any database storing multiple attributes

across multiple points in time, regardless of how those points are stored or accessed. I disagree.

35. First, I note that Petitioner and Dr. Black analyze the term "multidimensional time-series database" by looking at the words "multidimensional," "time-series," and "database" in isolation. *See* Pet., 31-32; Ex. 1003 [Black Decl.] ¶ 87. Petitioner and Dr. Black, however, do not explain why this analysis is sufficient. *Id.* This approach does not establish the meaning of the phrase as a whole. A "hot dog," for example, does not refer to a heated canine. Similarly, a "relational database," if analyzed word-by-word might appear to be a database that can store relationships. But a "relational database" has a specific meaning that bears on its structure and the kinds of queries that can be performed. *See* Ex. 1045 [Buyya NPL] 32 (relational databases "offer fast and reliable structured data storage and transaction processing, but may lack scalability"); *id.*, 110 (contrasting "relational" databases with "key-type" and "NoSQL"). Petitioner does not explain why parsing the individual words yields the meaning of the claimed term, and simply assumes that it does.

36. Moreover, under Petitioner and Dr. Black's understanding, virtually any ordinary database would qualify as a "multidimensional time-series database." For example, an individual's online checking-account includes multiple attributes (*e.g.*, account identifier, transaction amount, merchant) for transactions occurring

at different times. Likewise, an email inbox stores multiple attributes (*e.g.*, sender, recipient, subject) for messages received over time. Yet these stores could be implemented in any number of ways, and no one would describe them all as "multidimensional time-series databases." Petitioner provides no evidence—intrinsic or extrinsic—that a POSITA would adopt such an expansive understanding.

37. Petitioner and Dr. Black's silence is for good reason. As explained below, the literature consistently describes a "time-series database" as a database especially suited or optimized for time series data. The '934 patent and its incorporated-by-reference applications are consistent with that usage and describe specialized databases designed to efficiently store time-series data.

38. The term "time-series database" is used in numerous sources and primers to refer to specialized databases optimized for time-series data. For example, InfluxData explains that a "time series database (TSDB) is a database optimized for time-stamped or time series data" and is "built specifically for handling metrics and events … that are time-stamped." Ex. 2024 [InfluxData]. Similarly, DataCamp explains that time-series databases are "specialized databases designed to manage data that is organized and indexed by time," and distinguishes them from "traditional databases … optimized for general-purpose data storage." Ex. 2025 [Datacamp].

39. Other technical and academic sources confirm the same understanding. *See, e.g.*, Ex. 2026 [Grzesik] 373 ("Time series database (TSDB) is a database type designed and optimized to handle timestamped or time-series data"); Ex. 2027 [Literature Study: Timeseries Databases] 1 (describing time-series databases as "specialized" systems "optimize[d]" for time-indexed data); Ex. 2028 [A Guide to Time Series Databases] (time-series databases "have been optimized for processing time series data"); Ex. 2029 [The ultimate guide to time series databases] (time-series databases are "optimized to store, retrieve, and manage timestamped data points"); Ex. 2030 [Honeycomb] (time series database is "a specialized database that efficiently stores and retrieves time-stamped data"); Ex. 2031 [What is a Time Series Database?] 1 (explaining that time-series databases are "specialized" systems "specifically designed" to handle time-stamped data).

40. These sources consistently describe time-series databases as databases specialized for time-indexed data, not general-purpose databases that merely happen to store data over time. Neither Petitioner nor Dr. Black address this well-known usage in the art. *See generally* Pet.; Ex. 1003 [Black-Decl.].

41. The '147 patent (incorporated by reference in the '934 patent) teaches that "the sensor data is passed without transformation to the data management engine 120, where it is aggregated and organized for storage ***in a specific type of data store 125 designed to handle the multidimensional time series data*** resultant

from sensor data." Ex. 2032 ['147] 6:34-41; *see id.*, 7:20-25. It further explains that, due to the volume and continuous nature of such time series data, it cannot be stored arbitrarily, but instead must be organized using timestamps and defined sampling intervals—*e.g.*, storing data "every 10 seconds, using the timestamp as the key." *Id.*, 6:51-56.

42. The "specific type of data store," thus, is "designed to handle the multidimensional time series data" and utilizes, for example, timestamp keys, to efficiently process time-series workloads. Accordingly, the intrinsic record describes a specialized database designed to process time-series data, rather than a general-purpose database that merely stores data over time.

43. Thus, both the technical literature and the intrinsic record describe a "time-series database" as a specialized database optimized for processing time-series data, not a generic database. In my opinion, Petitioner's contrary view—under which any database containing multiple attributes across multiple time points regardless of implementation would qualify—is far afield of that record and at minimum required Petitioner to support its view of "multi-dimensional time-series database."

2. <u>There Is No Reason To Believe That Kirti's Repository Is Optimized Or Especially Suited For Time-Series Data.</u>

44. There is no evidence that Kirti's repository is a specialized database optimized or especially suited for time-series data. Rather, Kirti states that "[t]he

analytics and threat intelligence repository database 211 may be ***any database*** or data repository with query capability." Ex. 1004 [Kirti] 10:61-63. A system that may be implemented using ***any*** database does not require a specialized database optimized or especially suited for time-series data. Rather, it is a generic repository capable of storing activity logs or other information.

45. Consequently, in my opinion, Petitioner and Dr. Black have failed to demonstrate that Kirti alone or in combination with Coffin teaches a "multidimensional time-series database."

B. "Determining Whether The Additional Verification Is Required To Grant Access" After "Receiv[ing] A Request To Authenticate A Client" (All Claims, All Grounds).

1. The Order Of The Claims.

46. Claim 1 requires:

> Limitation [1.1] "A computer system configured to execute software instructions stored on nontransitory machine-readable storage media, wherein the software instructions comprise instructions that:"
>
> Limitation [1.2] "***receive a request to authenticate a client***, wherein the request comprises an identifier and a password,"
>
> Limitation [1.3] "store, in a multidimensional time-series database, information about the request,"
>
> Limitation [1.4] "determine whether the password corresponds to a user account identified by the identifier,"

Limitation [1.5] "***determine whether an additional verification is required to grant access***, wherein determining whether the additional verification is required to grant access comprises:"

Limitation [1.6] "***retrieving, from the multidimensional time-series database, historical information about previous access requests*** associated with the user account, and"

…

Limitation [1.8] "based on the additional verification being required to grant access:"

Limitation [1.9] "select an additional verification method from a plurality of verification methods,"

Limitation [1.10] "cause the client to be prompted to complete the additional verification method, and"

47. The logic of the claim language requires the steps be performed in order. Each of the recited operations depends on the authentication request received in limitation [1.2]. Limitation [1.3] stores information about "the request" and limitation [1.4] evaluates the "password" and "identifier" provided in that request. Limitations [1.5] and [1.6] recite "determin[ing] whether an additional verification is required to grant access" which "comprises" "retrieving, from ***the*** multidimensional time-series database, historical information about ***previous*** access requests associated with ***the*** user account." Limitations [1.8]-[1.11] then implement the required additional verification. Because these later operations act

on the request and data introduced in limitation [1.2], they necessarily occur as part of processing that request.

48. The ’934 patent’s specification is consistent with the logic of the claim language.

49. The ’934 patent’s Figure 6 depicts a process in which a **user first requests access** (steps 603 and 606) before **the server determines the required verification score** (step 615) and **verifies the user** (step 618):

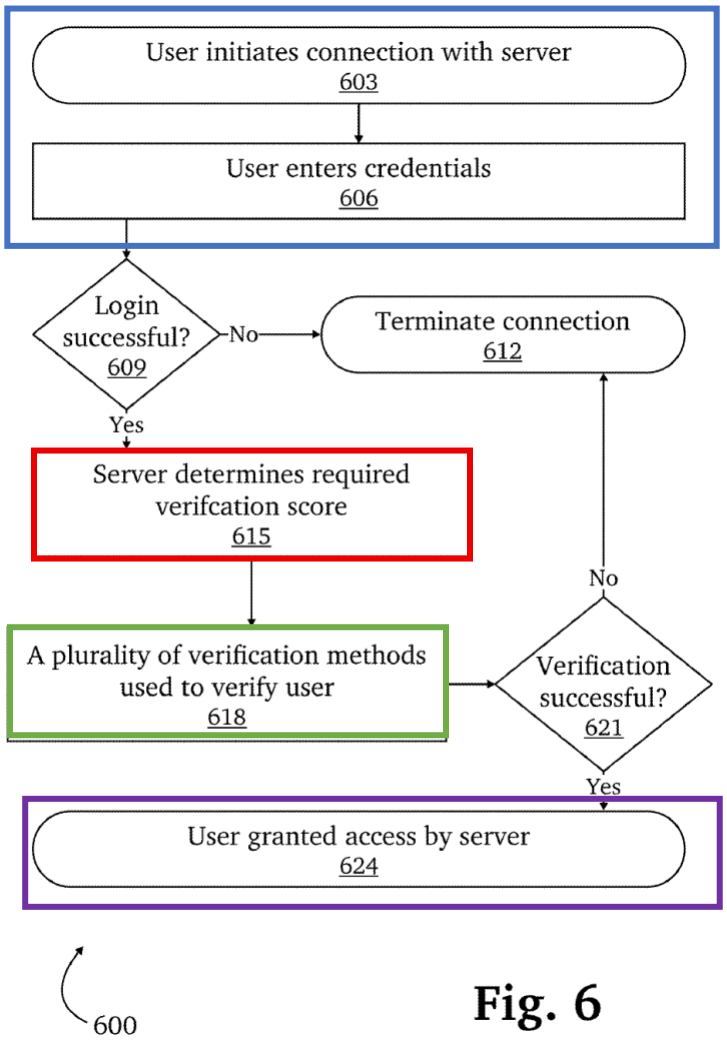

Fig. 6

Ex. 1001 ['934] Fig. 6 (annotated). If the verification is successful, **the user is granted access by the server** (step 624).

50. The '934 patent's corresponding written description also confirms this order. The '934 patent teaches that "[a]t an initial step 603, a user requests access from a server." *Id.*, 11:63-64. Then, "[a]t step 606, the server requests login credentials from the user." *Id.*, 11:65-66. "***If the login is successful at step 609, the server dynamically determines a required verification score required*** before the user can access the server at step 615." *Id.*, 12:2-4. Then, "[a]t step 618, a plurality of verification methods may be used to verify the user." *Id.*, 12:9-11. "If the verification is successful at step 621, the user is granted access at step 624." *Id.*, 12:18-19.

51. The determination step thus presupposes a prior authentication request. This corresponds directly to limitations [1.5]-[1.7], which require determining whether additional verification is required—including retrieving historical information—as part of evaluating that request and the determination of whether to grant access. Thus, both the claim language and the specification describe a system that performs the claimed determination—and the associated retrieval—only after, and in response to, the authentication request.

2. Kirti's System Determines Whether A Remediation Action Is Appropriate When It Retrieves Activity Data In Scheduled Batches, Not In Response To Receiving A Request To Authenticate A Client.

52. I understand that Petitioner and Dr. Black argue that Kirti "teaches" the "determine whether an additional verification is required to grant access" limitation as follows:

> Kirti teaches this claim element. The Kirti system analyzes a user's historic login activity to identify potential threats and determine whether to apply "remedial measures, such as **adding additional steps to authentication**." *E.g.*, EX1004, 5:25-37 (emphasis added); *see also id.*, 3:53-58 (system performs "threat detection" and recommends "appropriate responses to different categories of threat"), 3:58-4:3 (system determines "models of normal and/or abnormal behavior in user activity," detects "patterns of suspicious activity," and then recommends "remedial measures"). Kirti teaches carrying out this remediation "automatically." 25:49-52. EX1003, ¶89.

Pet., 34-35. But the processes in Kirti that Petitioner and Dr. Black rely upon do not occur in the correct order.

53. Petitioner relies heavily upon Kirti's Figure 5B as allegedly "show[ing] an exemplary process in which activity data is retrieved and used to generate threat models (step 506) that 'include baseline user profiles over various periods of time.'" Pet., 42. But Figure 5B is not initiated in response to any

authentication request. Indeed, no such request appears in the figure or Kirti's corresponding description:

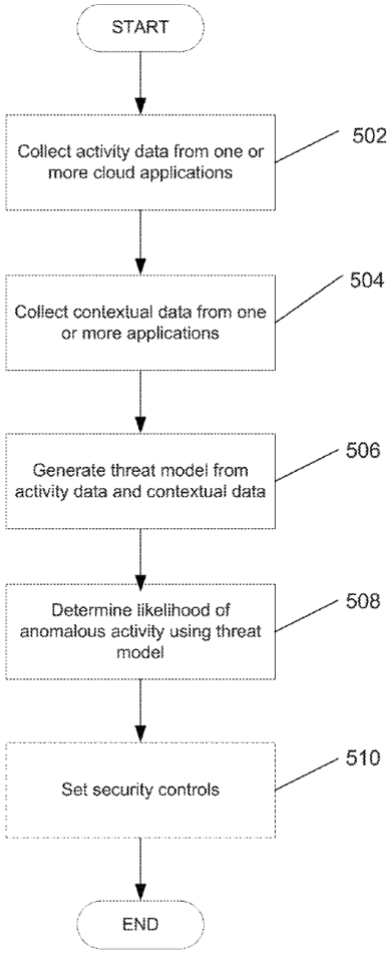

FIG. 5B

Ex. 1004 [Kirti] Fig. 5B.

54. Rather, Kirti's system generates a threat model and sets appropriate security controls in steps 506-510 whenever data is collected from the cloud applications in steps 502-504. And, as Petitioner acknowledges (Pet., 45-46), Kirti describes that it collects activity data from cloud applications "periodically," "e.g.,

every 4 hours or every 6 hours." Ex. 1004 [Kirti] 10:9-17. Thus, Kirti determines whether additional verification is required on a periodic basis, not when a request to authenticate a client is received.

55. Thus, in my opinion, rather than demonstrating that Kirti teaches performing the process of retrieving activity data and generating a threat model whenever a request to authenticate a client is received, Petitioner and Dr. Black at most show that Kirti periodically batch collects activity data for multiple users (*e.g.*, every 4, 6, or 24 hours). Any such retrieval is therefore not performed in response to an authentication request.

3. Kirti Does Not Determine Whether Additional Verification Is Required "To Grant Access" In Response To Receiving A Request To Authenticate.

56. I understand that Petitioner and Dr. Black rely upon Kirti's teaching of selecting a remediation method which includes "additional steps to authentication" as allegedly teaching "selecting an additional verification method from a plurality of verification methods." Pet., 49. Petitioner then argues that it would have been obvious "[i]n the cases where the remedial action involved 'additional steps to authentication,' such as a one-time password, performing that authentication would necessarily involve prompting the client to complete the

additional authentication and then determining whether it was corrected completely." *Id.*, 50.[1]

57. As Petitioner acknowledges, Kirti discusses additional verification twice throughout its disclosure. Pet., 23 (citing Ex. 1004 [Kirti] 28:33 and 5:34). But these disclosures are in the context of a first cloud application detecting a threat and alerting a second cloud application which may then impose additional authentication requirements. As Kirti explains:

> One cloud application can ***proactively warn another cloud application of a potential threat***. … When a threat is identified in a first cloud (e.g., a query from a blocked IP address), a cloud security monitoring and control system in accordance with embodiments of the invention can automatically ***notify a second cloud*** that is part of the business process. The notification can include a request or recommendation for

[1] I note that Petitioner's combination "combines Kirti's threat detection and remediation system with Coffin's implementation details on how to select and perform an additional verification process." Pet., 21. Because Petitioner relies upon Kirti's overall process of determining whether additional verification is required and only relies upon Coffin's alleged teachings of "the specific types of measures," Petitioner's argument fails for both Kirti alone (Ground 1) and Kirti in combination with Coffin (Ground 2).

> a higher level of security controls, such as elevated authentication or OTP validation, in the business process.

Ex. 1004 [Kirti] 28:24-34.

58. Thus, Kirti's additional verification is not used to determine whether to grant access to the authentication request that triggered the analysis. Rather, it is applied proactively by a different cloud application and in connection with a different authentication to that second cloud if one is attempted, not in deciding whether to grant access to the request being evaluated.

59. In my opinion, Petitioner and Dr. Black therefore fail to identify any disclosure in Kirti where, upon receiving an authentication request, the system determines whether additional verification is required to grant access to that request—much less does so by retrieving historical information and prompting the client to complete the additional verification, as required by the claims.

C. "Selecting The Additional Verification Method From A Plurality Of Verification Methods" (All Claims, All Grounds).

60. Claim 1 requires:

> Limitation [1.1] "A computer system configured to execute software instructions stored on nontransitory machine-readable storage media, wherein the software instructions comprise instructions that:"
>
> Limitation [1.8] "based on the additional verification being required to grant access:"

Limitation [1.9] "select an additional verification method from a plurality of verification methods,"

61. I understand that Petitioner presents a theory under Kirti alone and a theory under Kirti in combination with Coffin. In my opinion, both theories fail.

1. Kirti's Remediation Actions Are Not Verification Methods (Grounds 1 & 3).

62. I understand that Petitioner and Dr. Black first argue that Kirti teaches this limitation as follows:

> Kirti teaches recommending and performing a ***remedial action*** when a threat is detected and mentions that ***one such remedial action*** is "adding additional steps to authentication," i.e., requiring completion of an additional verification step (e.g., enter a one-time password). *E.g.*, EX1004, 5:27-37, 28:24-36. EX1003, ¶112.
>
> Kirti discloses manually or automatically selecting which one of a plurality of ***remedial actions*** to use. *E.g.,* EX1004, 5:27-37, 5:55-57 ("embodiments of the invention may include remediation functions that provide manual and/or automated processes in response to threats."), 6:10-14, 14:64-67, 25:15-20, 25:45-52, 27:10-12. EX1003, ¶113.

Pet., 49; Ex. 1003 [Black Decl.] ¶¶ 112-113.

63. As can be seen above, Petitioner and Dr. Black do not identify a "plurality of verification methods." Notably, Petitioner acknowledges that only "one such remedial action is 'adding additional steps to authentication.'" Pet., 49. At most, Petitioner and Dr. Black identify a plurality of remediation actions but do

not explain why remediation actions teach verification methods. And for good reason as there is no reason to believe that a plurality of remediation actions teach a plurality of verification methods.

64. Kirti teaches that when a threat is detected, its system can "secure other services on which a user maintains data by apply remedial measures [*sic*], such as adding additional steps to authentication, changing passwords, blocking a particular IP address or addresses, blocking email messages or senders, or locking accounts." Ex. 1004 [Kirti] 5:27-37; 25:45-49 ("any of a variety of security measures may be taken to address an identified threat such as, but not limited to, deactivating an account, resetting a password, or setting stronger security controls.").

65. As Petitioner and Dr. Black tacitly admit, only one of these options ("adding additional steps to authentication") is possibly a verification method. *See* Pet., 49 (Kirti "mentions that ***one such remedial action*** is 'adding additional steps to authentication,' i.e., requiring completion of an additional verification step (e.g., enter a one-time password)."). But, even if that were a verification method, Kirti is not shown to disclose a "plurality of verification methods"—*i.e.*, more than one verification method—that is selected from.

66. To the extent that Petitioner meant to argue that Kirti's other "remedial" measures are "verification methods," there is simply no reason to

believe this is so. Verification is intended to confirm that a user is who he or she claims to be. *See* Ex. 2033 [InvestGlass] ("The process of identity verification serves as an essential safeguard, crucial in establishing that individuals are genuinely who they claim to be."); Ex. 2034 [Barron's Dictionary of Computer and Internet Terms] 530 ("**verified user** on Twitter, an account belonging to a public figure that has been authenticated. ***The person posting is who they claim to be and has submitted documentation to prove it***."); Ex. 1005 [Coffin] 177 ("we are looking for further constraints on identity that can ***assure us that the person sitting at the keyboard is who they claim to be***.").

67. Consistent with the usage in the art, the '934 patent describes several verification methods, meant to confirm that a user is who he or she claims to be. The '934 patent provides many examples of "verification methods" such as "biometrics scans, such as fingerprint scan, iris scan, facial recognition, and the like; voice recognition; and employee badge scanning using some near-field technology such as radio-frequency identification (RFID), or near field communication (NFC)." Ex. 1001 ['934] 10:34-40; *see also id.,* 10:43-52 ("a user's co-worker or security personnel" may provide additional verification); 10:53-65 (a "rewards program" "disguised so that it may appear as a simple activity … without overtly making it a means of verifying the user"); 10:66-11:3 (using "videos or pictures"); 11:4-20 ("Device ID" and "Network monitoring 415e

may be passive verification by the server based on information regarding the connection requesting access"); 11:21-27 ("One-time use codes 415g may be uniquely generated codes that are sent to the user through a text message or email, or generated on-demand on the user's mobile device."). Each of these methods is used to confirm that a user is who he or she claims to be.

68. In contrast to confirming that a user is who he or she claims to be, Kirti's remedial actions are intended to more broadly secure its system and address the threat. In accord, Kirti only teaches that one possible remediation action is "adding additional steps to verification" (Ex. 1004 [Kirti] 5:27-37) because that is only one method of remediating possible threats. Kirti also considers selecting from additional remedial methods of "deactivating an account," "changing the password, blocking a particular IP address or addresses, blocking email messages or senders, or locking accounts" (*id.*; *id.*, 25:45-49) which "remediate" possible threats by eliminating vulnerabilities or vectors for attack. These methods do not have anything to do with verifying whether a user is who he or she claims to be.

69. Thus, in my opinion, Petitioner's theory based upon Kirti alone fails.

2. Kirti-Coffin Does Not Teach Selecting An Additional Verification Method (Grounds 2 & 4).

70. Apparently because Kirti "provides little implementation detail for" the steps of "selecting and performing additional verification," Petitioner and Dr. Black alternatively argue that Kirti-Coffin teaches the limitation as follows:

> Coffin includes an entire chapter on implementing "Two-Factor Authentication." EX1005, 177-208. Therein, Coffin teaches additional verification/authentication methods such as: a "second password or PIN," "a CAPTCHA," an "answer [to] personal questions," a "biometric scan[], like fingerprint, retina, or facial recognition," and "pass codes sent to [] e-mail, pager, or cell phone"). EX1005, 177. Coffin also explains how to implement additional verification methods that include a passcode, such as an SMS to a phone, a URL to a pager, and an email to supporting devices. *Id.*, 178-208. EX1003, ¶116.
>
> Coffin also teaches a heuristic for selecting an additional verification method from the plurality of passcode verification methods: select the user's pager and/or cell phone if these devices are available, otherwise select email. *E.g.*, EX1005, 183, 185, 200 ("By preference, [the system] will send the two-factor code to the user's pager and cell phone. If neither of those is available, [the system] will send the code to the user's e-mail."), 201. It also was well known in the art to select an additional verification method from a plurality of verification method, for example, to ensure successful delivery of the additional verification based on the availability of the verification methods, cost, user preferences, etc. *Supra* Section IV.B.2. EX1003, ¶117.

Pet., 51-52; Ex. 1003 [Black Decl.] ¶¶ 116-117. As seen above, Petitioner and Dr. Black never identify a computer system that selects an additional verification method from a plurality of verification methods as the claims require. Specifically, Petitioner never identifies a system selecting from Coffin's list of authentication

techniques. And Coffin's discussion of what device a two-factor passcode is sent to does not teach selecting from a plurality of verification methods.

71. Coffin is a textbook that lays out concepts for securing Oracle applications. Ex. 1005 [Coffin] 1 ("We will not be building any specific application, but will focus on the security aspects in building an application."). While Coffin lays out a list of the "many things that are being done in computer security to attempt to achieve" authentication, that list is disembodied and not tethered to any particular system. *Id*., 177. In other words, Coffin's list of authentication methods is not a "plurality of verification methods" from which a particular system will select an additional verification method as required by the claims. Rather, it is a list of methods being attempted in computer security. Unsurprisingly, Coffin never mentions or teaches how a system would "select an additional verification method" from Coffin's general, list of authentication methods.

72. Coffin's disclosure in this regard is analogous to a textbook on automobiles stating that various engines used in the automobile industry include gasoline, diesel, hybrid, or electric engines. This is merely a disclosure that a car may have any one of those engines, not a disclosure that the car has access to a plurality of engines that it may select an additional engine from.

73. Petitioner and Dr. Black do not identify any teaching in Coffin of selecting from the list Petitioner identifies as the "plurality of verification methods." *See* Pet., 50-51; Ex. 1003 [Black-Decl.] ¶¶ 116-117. Petitioner instead turns to Coffin's description of the "process of requesting and receiving the two-factor ***pass code***." Pet., 51-52; Ex. 1005 [Coffin] 183. Per Petitioner, Coffin teaches "selecting an additional verification method from the plurality of passcode verification methods: select the user's pager and/or cell phone if these devices are available, otherwise select email." Pet., 51. But these alleged "verification methods" are not the same as the earlier-identified list of verification methods. *Compare* Ex. 1005 [Coffin] 177 *with id.*, 183. Rather, this is a list of methods for obtaining a pass code, *e.g.*, via pager, cell phone, or email.

74. But, sending a pass code to different devices (a pager, cell phone, or computer) is merely selecting from a plurality of delivery methods. Only a single verification method—obtaining a passcode—is disclosed. Thus, at best, Petitioner demonstrates that Coffin teaches selecting a delivery method from the options of pager, cell phone, or email from a particular verification method (passcode). This is not the same as "select[ing] an additional verification method from a plurality of verification methods."

75. Coffin's lack of disclosure is in sharp contrast to the '934 patent.

76. The ’934 patent discloses that its system 400 uses “one or more verification methods 415[a-g], which may include, without limitation, sensors 415a, trusted parties 415b, untrusted parties 415c, video or picture 415d, network monitoring 415e, device ID 415f, and ***one-time-use codes 415g***.” Ex. 1001 [’934] 10:28-33. As can be seen in Figure 4 below, these are each separate and independent **verification methods**, with the **one-time-use code** as a single verification method:

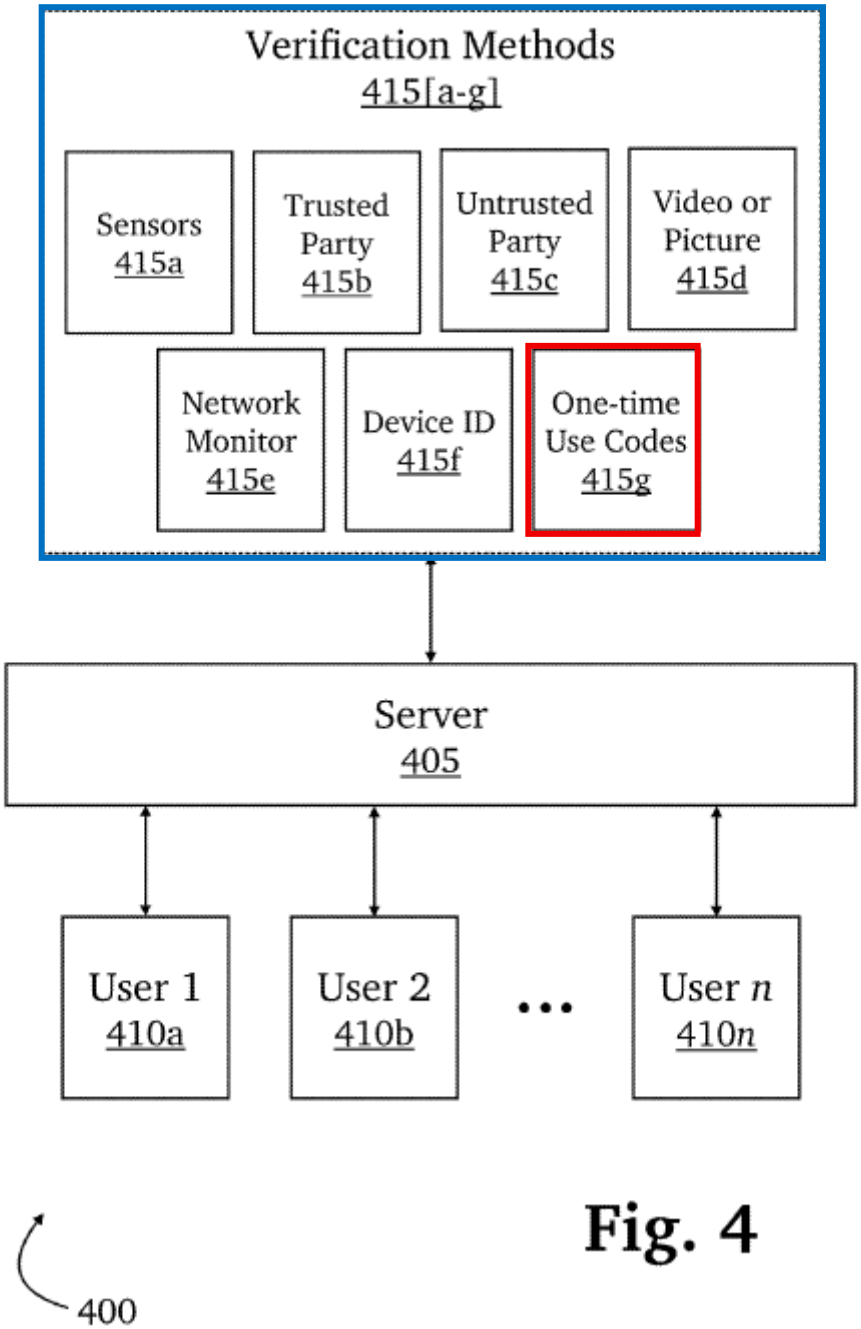

Fig. 4

Id., Fig. 4 (annotated). Within the description of the one-time-code verification method, the '934 patent describes that the codes "may be uniquely generated codes

that are sent to the user through a text message or email, or generated on-demand on the user's mobile device." *Id.*, 11:21-23.

77. Thus, the '934 patent makes clear that the use of a "one-time code" is itself the verification method and that delivery of the one-time code through text message or through email are not separate verification methods.

78. Finally, I understand that Petitioner and Dr. Black assert that it was:

> ***well known*** in the art to select an additional verification method from a plurality of verification methods, for example, to ensure successful delivery of the additional verification based on the availability of the verification methods, cost, user preferences, etc. *Supra* Section IV.B.2. EX1003, ¶117.

Pet., 51-52; Ex. 1003 [Black Decl.] ¶ 117. Again, however, this addresses "successful delivery of the additional verification" rather than selecting an additional verification method. Moreover, I do not see any explanation or evidence of how or why a POSITA would have been motivated to modify Kirti or Kirti-Coffin in such a fashion.

79. Thus, in my opinion, Petitioner's Kirti-Coffin theory also fails.

---

80. At this stage of the proceedings, my opinions are preliminary. I may further develop these opinions or offer additional opinions after a decision to institute, should the Board decide to do so.

VII. CONCLUSION

81. Although my complete opinions are set forth above, for convenience I summarize several points of my opinions in conclusion. For the foregoing reasons, based on my expertise and experience and the record of this case that I have reviewed, it is my opinion that:

- Claims 1-30 are not obvious over Kirti (Ground 1);
- Claims 1-30 are not obvious over Kirti and Coffin (Ground 2);
- Claims 10 and 25 are not obvious over Kirti and Vemulapalli (Ground 3);
- Claims 10 and 25 are not obvious over Kirti, Coffin, and Vemulapalli (Ground 4).

82. I understand that my opinions discussed above support a legal conclusion that claims 1-30 are nonobvious.

In signing this declaration, I recognize that the declaration will be filed as evidence in a contested case before the Patent Trial and Appeal Board of the United States Patent and Trademark Office. I also recognize that I may be subject to cross-examination in the case and that cross-examination will take place within the United States. If cross-examination is required, I will appear for cross-examination within the United States during the time allotted.

I hereby declare that all statements made herein of my own knowledge are true and all statements made herein on information and belief were and are believed by me to be true, and that all statements herein were and are made with the knowledge that willful false statements and the like so made are punishable by fine or imprisonment, or both, under section 1001 of Title 18 of the United States Code and that any such willful false statements may jeopardize the validity of the application or any patents issued thereon.

Respectfully submitted,

Dated: April 8, 2026

Sam Malek, Ph.D.

EXHIBIT A

SAM MALEK

Professor
Department of Informatics
Donald Bren School of Information and Computer Sciences
University of California, Irvine

Interdisciplinary Science and Engineering Building (ISEB), Room 2446
Irvine, California 92697-3440

+1 (949) 357-3501 (Phone)
malek@uci.edu (Email)
http://www.ics.uci.edu/~malek/ (WWW)

TABLE OF CONTENTS

1 EDUCATION 2
2 PROFESSIONAL HISTORY 2
3 HONORS, AWARDS, AND STATISTICS 3
4 RESEARCH GRANTS, GIFTS, AND CONTRACTS 4
5 PUBLICATIONS 8
6 TEACHING 20
7 SUPERVISED STUDENTS AND RESEARCHERS 21
8 FORMAL PRESENTATIONS 25
9 PROFESSIONAL SERVICE 29
10 UNIVERSITY SERVICE 38
11 PROFESSIONAL ASSOCIATIONS 40
12 PATENTS AND PATENT APPLICATIONS 40
13 LITIGATION CONSULTING 40

Qomplx LLC, Exhibit 2023
Page 2023 - 48
IPR2026-00182, Microsoft Corp. v. Qomplx LLC

1 EDUCATION

Doctor of Philosophy Computer Science August 2007
University of Southern California
Dissertation: *A User-Centric Approach for Improving a Distributed Software System's Deployment Architecture*

Master of Science Computer Science May 2004
University of Southern California
Emphasis on Software Engineering

Bachelor of Science Information and Computer Science December 2000
University of California, Irvine

2 PROFESSIONAL HISTORY

August 2007 – present	Professor Department of Informatics Donald Bren School of Information and Computer Sciences University of California, Irvine (July 2015 – June 2019, Associate Professor at UC Irvine) (August 2013 – June 2015, Associate Professor at George Mason University) (August 2007 – July 2013, Assistant Professor at George Mason University)
August 2007 – present	Director Software Engineering and Analysis Laboratory University of California, Irvine (August 2007 – June 2015 at George Mason University)
October 2013 – present	Member Cyberonix (October 2013 – May 2025, President)
April 2014 – January 2023	Shareholder Quandary Peak Research
July 2018 – July 2022	Director Institute for Software Research University of California, Irvine (July 2015 – June 2018, Faculty Member)
August 2007 – June 2015	Faculty Member C4I Center George Mason University
January 2003 – May 2007	Graduate Research Assistant Computer Science Department University of Southern California

April 2005 – May 2007	Software Architect Boeing Corporation Huntington Beach, CA
December 2000 – May 2002	Software Engineer PriceWaterhouseCoopers Consulting (IBM Global Business Services), Los Angeles, CA
August 1999 – Nov. 2000	Software Engineer FieldCentrix, Irvine, CA
May 1998 – September 1999	Software Engineer Neural Computing Systems Labs, Irvine, CA

3 HONORS, AWARDS, AND STATISTICS

- H-index: 56
  (scholar.google.com)
- Citations: 12,358
  (scholar.google.com)
- ACM SIGSOFT Distinguished Paper Award 2025
  47th IEEE/ACM International Conference on Software Engineering
- Test of Time Award 2020
  18th ACM SIGSOFT International Symposium on the Foundations of Software Engineering
- Mason Emerging Researcher/Scholar/Creator Award 2013
  George Mason University
- NSF CAREER Award 2013
- Outstanding Faculty Research Award 2011
  Computer Science Department, George Mason University
- DARPA Computer Science Study Group 2011 – 2014
  Selective early career award given annually to 12 academic panelists
- ACM Doctoral Dissertation Competition finalist 2007
  Nominated by the University of Southern California
- Outstanding Graduate Student Researcher Award 2005
  Computer Science Department, University of Southern California
- USC Viterbi School of Engineering Doctoral Fellow 2004 – 2008
- Magna Cum Laude 2000
- Cody Thorne Memorial Scholarship Award 1998
  Awarded annually to the youngest and highest scholastic student of the year
- Dean's Honor List 1997 – 2000

Qomplx LLC, Exhibit 2023
Page 2023 - 50
IPR2026-00182, Microsoft Corp. v. Qomplx LLC

4 RESEARCH GRANTS, GIFTS, AND CONTRACTS

G32. National Science Foundation
"STEM-APWD: Automated Software Engineering Techniques for Improving the Accessibility of Software"
Duration: 01/01/2024 – 09/30/2026
Investigators: Sam Malek (PI), Iftekhar Ahmed (Co-PI), and Stacy Branham (Co-PI)
Award Amount: $100,000

G31. UCI, Academic Senate Council on Research, Computing and Libraries (CORCL) Award
"Accelerating Software Security through AI-Driven Detection and Patching of Architectural Vulnerabilities"
Duration: 3/25/2025 – 6/30/2025
Investigator: Sam Malek (PI)
Award Amount: $3,352

G30. UCI, Academic Senate Council on Research, Computing and Libraries (CORCL) Award
"User Studies for Validating Automatically Detected Software Accessibility Issues"
Duration: 4/14/2023 – 6/30/2023
Investigator: Sam Malek (PI)
Award Amount: $2,758

G29. National Science Foundation
"Automated Software Engineering Techniques for Improving the Accessibility of Software"
Duration: 10/1/2022 – 9/30/2026
Investigator: Sam Malek (PI), Iftekhar Ahmed (Co-PI), and Stacy Branham (Co-PI)
Award Amount: $1,200,000

G28. UCI, Academic Senate Council on Research, Computing and Libraries (CORCL) Award
"Learning Neural Network Embedding of Apps for Foundational Advances in Software Engineering"
Duration: 3/18/2022 – 6/30/2022
Investigators: Sam Malek (PI)
Award Amount: $2,785

G27. National Science Foundation
"A General Framework for Automated Test Transfer"
Duration: 10/1/2021 – 9/30/2025
Investigators: Sam Malek (PI at UCI), Alessandro Orso (Lead PI at Georgia Tech), and Nenad Medvidovic (PI at USC)
Award Amount: $1,200,000

G26. US Department of Education, Graduate Assistance in Areas of National Need Program (GAANN)
"Graduate Fellowships in Cybersecurity at the University of California, Irvine"
Duration: 10/1/2021 – 6/30/2024
Investigators: Sam Malek (PI)
Award Amount: $1,141,425

G25. UCI, School of Information and Computer Sciences Research Award
"SAHARA: Software Analysis for Hardware Acceleration with Reconfigurable Architectures"

Qomplx LLC, Exhibit 2023
Page 2023 - 51
IPR2026-00182, Microsoft Corp. v. Qomplx LLC

Duration: 7/1/2021 – 6/30/2022
Investigators: Joshua Garcia (PI), Sang-Woo Jun (Co-PI), Alberto Krone-Martins (Co-PI), Aparna Chandramowlishwaran (Co-PI), Sam Malek (Co-PI), Crista Lopes (Co-PI), Jim Bullock (Co-PI)
Award Amount: $75,000

G24. National Science Foundation
"Research Experiences for Undergraduates (REU) Supplement for Constructing a Community-Wide Software Architecture Infrastructure"
Duration: 6/1/2021 – 8/31/2022
Investigators: Sam Malek (PI) and Joshua Garcia (Co-PI)
Award Amount: $17,400

G23. UCI, Academic Senate Council on Research, Computing and Libraries (CORCL) Award
"Mobile Devices for Evaluating Accessibility of Mobile Apps through User Studies"
Duration: 3/15/2021 – 6/30/2021
Investigators: Sam Malek (PI)
Award Amount: $6,990

G22. UCI, School of Information and Computer Sciences Research Award
"Toward Stemming Accessibility Issues in Software"
Duration: 7/1/2020 – 6/30/2021
Investigators: Sam Malek (PI), Iftekhar Ahmed (Co-PI), Stacy Branham (Co-PI)
Award Amount: $75,000

G21. Google
"Mining Architectural Information to Stem Technical Debt"
Duration: 10/3/2019 – 10/2/2020
Investigators: Sam Malek (PI)
Award Amount: $42,500

G20. National Science Foundation (NSF)
"Constructing a Community-Wide Software Architecture Infrastructure"
Duration: 9/1/2018 – 8/31/2022
Investigators: Sam Malek (PI at UCI), Joshua Garcia (Co-PI at UCI), Nenad Medvidovic (Lead PI at USC), Mehdi Mirakhorli (PI at RIT), Rick Kazman (PI at UH), Yuanfang Cai (PI at Drexel), and Lu Xiao (PI at Stevens)
Award Amount: $1,660,000

G19. Federal Bureau of Investigation (FBI)
"Analysis of Android Application Packages for Security-Relevant Properties"
Duration: 9/26/2016 – 9/25/2017
Investigators: Sam Malek (PI)
Award Amount: $118,964

G18. National Science Foundation (NSF)
"Planning and Prototyping a Community-Wide Software Architecture Instrument"
Duration: 8/1/2016 – 7/31/2018
Investigators: Sam Malek (PI at UCI), Joshua Garcia (Co-PI at UCI), Nenad Medvidovic (Lead PI at USC), and Mehdi Mirakhorli (PI at RIT)
Award Amount: $130,000

G17. National Science Foundation (NSF)
"Efficient Formal Analysis of Evolving Software Systems"
Duration: 7/1/2016 – 6/30/2020
Investigators: Sam Malek (PI), Hamid Bagheri (Co-PI)
Award Amount: $499,170

G16. Air Force Office of Scientific Research (AFOSR)
"RASS: Resilient Autonomic Software Systems"
Duration: 10/15/2015 – 10/14/2018
Investigators: Sam Malek (PI at UCI), Daniel A. Menasce (Lead PI at GMU), Hassan Gomaa (Co-PI at GMU)
Award Amount: $1,016,641

G15. Department of Homeland Security (DHS)
"Tools for Automated Detection and Assessment of Security Vulnerabilities in Mobile Applications"
Duration: 6/1/2014 – 5/31/2017
Investigator: Sam Malek (Sole PI)
Award Amount: $500,000

G14. National Security Agency (NSA)
"Compositional Analysis of Android Apps for Security Vulnerabilities"
Duration: 9/5/2014 – 4/24/2015
Investigator: Sam Malek (Sole PI)
Award Amount: $200,000

G13. National Security Agency (NSA)
"Science of Secure Frameworks"
Duration: 1/1/2014 – 12/31/2016
Investigators: Sam Malek (PI at UCI), William Scherlis (Lead PI at CMU) and colleagues at CMU
UCI Award Amount: $195,000

G12. Defense Advanced Research Projects Agency (DARPA)
"Testing Privacy-Preserving Distributed Systems on DETERLab"
Duration: 11/1/2013 – 2/28/2015
Investigators: Sam Malek (PI at GMU), Nenad Medvidovic (Lead PI at USC), and Yuriy Brun (PI at UMass)
Award Amount: $300,000
GMU Award Amount: $84,000

G11. Office of the Director of National Intelligence (ODNI)
"Automated Approach for Detection and Mitigation of Security Vulnerabilities in Mobile Applications"
Duration: 7/8/2013 – 7/7/2016
Investigator: Sam Malek (Sole PI)
Award Amount: $359,372

G10. Intelligence Advanced Research Projects Activity (IARPA)
"sTile: Private Computing in the Open"

Qomplx LLC, Exhibit 2023
Page 2023 - 53
IPR2026-00182, Microsoft Corp. v. Qomplx LLC

Duration: 9/27/2013 – 9/26/2014
Investigators: Sam Malek (PI at GMU), Nenad Medvidovic (Lead PI at USC), and Yuriy Brun (PI at UMass)
Award Amount: $300,000
GMU Award Amount: $84,000

G9. National Science Foundation (NSF)
"CAREER: A Mining-Based Approach for Consistent and Timely Adaptation of Component-Based Software"
Duration: 2/1/2013 – 1/31/2019
Investigator: Sam Malek (Sole PI)
Award Amount: $451,481

G8. Army Research Office (ARO)
"Architecture-Based Self-Securing Systems"
Duration: 10/1/2012 – 9/30/2015
Investigators: Sam Malek (PI at GMU), William Scherlis (Lead PI at CMU) and colleagues at CMU
GMU Award Amount: $200,000

G7. Federal Bureau of Investigation (FBI)
"Automated Security Testing and Analysis of Android Applications"
Duration: 9/12/2012 – 9/11/2014
Investigator: Sam Malek (Sole PI)
Award Amount: $90,000

G6. Defense Advanced Research Projects Agency (DARPA)
"Engineering Highly Adaptive Resilient Software Systems"
Duration: 4/25/2011 – 5/31/2016
Investigator: Sam Malek (Sole PI)
Award Amount: $949,065

G5. National Science Foundation (NSF)
"Mining the Execution History of a Software System to Infer the Best Time for its Adaptation"
Duration: 2/1/2012 – 1/31/2014
Investigator: Sam Malek (Sole PI)
Award Amount: $80,000

G4. Science Applications International Corporation (SAIC)
"COTS Very Small Computing Platforms - Tactical"
Duration: 1/1/2010 – 6/30/2011
Investigator: Sam Malek (Sole PI)
Award Amount: $224,470

G3. Science Applications International Corporation (SAIC)
"COTS Very Small Computing Platforms - Security"
Duration: 1/1/2010 – 6/30/2011
Investigator: Sam Malek (Sole PI)
Award Amount: $99,415

G2. National Science Foundation (NSF)

"SASSY: Self-Architecting Software Systems"
Duration: 06/15/2008 – 06/1/2011
Investigators: Sam Malek (Co-PI at GMU), Daniel A. Menasce (PI at GMU), Hassan Gomaa (Co-PI at GMU), and Joao P. Sousa (Co-PI at GMU)
Award Amount: $479,996

G1. US Army Topographic Engineering Center
Duration: 12/20/2006 – 12/20/2010
Investigators: Sam Malek (Co-PI at GMU), Michael Hieb (PI at GMU), and Mark Pullen (Co-PI at GMU)
Award Amount: $133,187

5 PUBLICATIONS

5.1 JOURNAL ARTICLES

J27. Negar Ghorbani, Joshua Garcia, and Sam Malek. "Bringing Architecture-Based Adaptation to the Mainstream." *Elsevier Journal of Information and Software Technology (IST),* Vol. 176, December 2024.

J26. Negar Ghorbani, Tarandeep Singh, Joshua Garcia, and Sam Malek. "Darcy: Automatic Architectural Inconsistency Resolution in Java." *IEEE Transactions on Software Engineering (TSE)*, Vol. 50, No. 6, June 2024.

J25. Sejin Jung, Junbeom Yoo, and Sam Malek. "A Systematic Co-engineering of Safety and Security Analysis in Requirements Engineering Process." *Elsevier International Journal of Critical Infrastructure Protection*, Vol 43, December 2023.

J24. Negar Ghorbani, Reyhaneh Jabbarvand, Navid Salehnamadi, Joshua Garcia, and Sam Malek. "DeltaDroid: Dynamic Delivery Testing in Android." *ACM Transactions on Software Engineering and Methodology (TOSEM)*, Vol. 32, No. 4, May 2023.

J23. Jun-Wei Lin, Navid Salehnamadi, and Sam Malek. "ROUTE: Roads Not Taken in UI Testing." *ACM Transactions on Software Engineering and Methodology (TOSEM)*, Vol. 32, No. 3, April 2023.

J22. Joshua Garcia, Ehsan Kouroshfar, Negar Ghorbani, and Sam Malek. "Forecasting Architectural Decay from Evolutionary History." *IEEE Transactions on Software Engineering (TSE)*, Vol. 48, No. 7, July 2022.

J21. Hamid Bagheri, Jianghao Wang, Jarod Aerts, Negar Ghorbani, and Sam Malek. "Flair: Efficient Analysis of Android Inter-Component Vulnerabilities in Response to Incremental Changes." *Springer Journal of Empirical Software Engineering (EMSE)*, Vol. 26, No. 54, April 2021.

J20. Mahmoud Hammad, Hamid Bagheri, and Sam Malek. "DelDroid: An Automated Approach for Determination and Enforcement of Least-Privilege Architecture in Android." *Journal of Systems and Software (JSS)*, Special Section on Architecting Autonomous and Smart Systems. Vol 149, March 2019.

J19. Joshua Garcia, Mahmoud Hammad, and Sam Malek. "Lightweight, Obfuscation-Resilient Detection and Family Identification of Android Malware." *ACM Transactions on Software Engineering and Methodology (TOSEM)*, Vol. 26, No. 3, January 2018. (Journal First)

Qomplx LLC, Exhibit 2023
Page 2023 - 55
IPR2026-00182, Microsoft Corp. v. Qomplx LLC

J18. Hamid Bagheri, Eunsuk Kang, Sam Malek, and Daniel Jackson. "A Formal Approach for Detection of Security Flaws in the Android Permission System." *Springer Journal on Formal Aspects of Computing*, Pages 1-20, November 2017.

J17. Alireza Sadeghi, Hamid Bagheri, Joshua Garcia, and Sam Malek. "A Taxonomy and Qualitative Comparison of Program Analysis Techniques for Security Assessment of Android Software." *IEEE Transactions on Software Engineering (TSE)*, Vol. 43, No. 6, June 2017. (Journal First)

J16. Alireza Sadeghi, Naeem Esfahani, and Sam Malek. "Ensuring the Consistency of Adaptation through Inter- and Intra-Component Dependency Analysis." *ACM Transactions on Software Engineering and Methodology (TOSEM)*, Vol. 26, No. 1, May 2017. (Journal First)

J15. Hamid Bagheri, Joshua Garcia, Alireza Sadeghi, Sam Malek, and Nenad Medvidovic. "Software Architectural Principles in Contemporary Mobile Software: from Conception to Practice." *Journal of Systems and Software (JSS)*, Vol. 119, Pages 31-44, September 2016.

J14. Naeem Esfahani, Eric Yuan, Kyle R. Canavera, and Sam Malek. "Inferring Software Component Interaction Dependencies for Adaptation Support." *ACM Transactions on Autonomous and Adaptive Systems (TAAS)*, Vol. 10, No. 4, February 2016.

J13. Hamid Bagheri, Alireza Sadeghi, Joshua Garcia, and Sam Malek. "COVERT: Compositional Analysis of Android Inter-App Permission Leakage." *IEEE Transactions on Software Engineering (TSE),* Vol. 41, No. 9, September 2015.

J12. Eric Yuan, Naeem Esfahani, and Sam Malek. "A Systematic Survey of Self-Protecting Software Systems." *ACM Transactions on Autonomous and Adaptive Systems (TAAS)*, Vol. 8, No. 4, January 2014.

J11. Deshan Cooray, Ehsan Kouroshfar, Sam Malek, and Roshanak Roshandel. "Proactive Self-Adaptation for Improving the Reliability of Mission-Critical, Embedded, and Mobile Software." *IEEE Transactions on Software Engineering (TSE)*, Vol. 39, No. 12, December 2013.

J10. Naeem Esfahani, Ahmed Elkhodary, and Sam Malek. "A Learning-Based Framework for Engineering Feature-Oriented Self-Adaptive Software Systems." *IEEE Transactions on Software Engineering (TSE)*, Vol. 39, No. 11, November 2013.

J9. Chris A. Mattmann, Nenad Medvidovic, Sam Malek, George Edwards, and Somo Banerjee. "A Middleware Platform for Providing Mobile and Embedded Computing Instruction to Software Engineering Students." *IEEE Transactions on Education*, Vol. 55, No. 3, pages 425-435, August 2012.

J8. Naeem Esfahani, and Sam Malek. "Utilizing Architectural Styles to Enhance the Adaptation Support of Middleware Platforms." *Elsevier Journal of Information and Software Technology (IST)*, Vol. 54, No. 7, pages 786-801, July 2012.

J7. Danny Weyns, Sam Malek, and Jesper Andersson. "FORMS: Unifying Reference Model for Formal Specification of Distributed Self-Adaptive Systems." *ACM Transactions on Autonomous and Adaptive Systems (TAAS) – Special Issue on Formal Methods for Pervasive, Self-Aware and Context-Aware Systems*, Vol. 7, No. 1, pages 1-61, April 2012.

J6. Sam Malek, Nenad Medvidovic, and Marija Mikic-Rakic. "Improving a Distributed Software System's Quality of Service via Redeployment." *IEEE Transactions on Software Engineering (TSE)*, Vol. 38, No. 1, pages 73-100, January/February 2012.

J5. Danny A. Menasce, Hassan Gomaa, Sam Malek, and Joao Pedro Sousa. "SASSY: A Framework for Self-Architecting Service Oriented Systems." *IEEE Software,* Vol. 28, No. 6, pages 78-85, November/December 2011.

Qomplx LLC, Exhibit 2023
Page 2023 - 56
IPR2026-00182, Microsoft Corp. v. Qomplx LLC

J4. Sam Malek, Harshini Ramnath Krishnan, and Jayalakshmi Srinivasan. "Enhancing Middleware Support for Architecture-Based Development through Compositional Weaving of Styles." *Journal of Systems and Software (JSS)*, Vol. 83, No. 12, pages 2513-2527, December 2010.

J3. Sam Malek, George Edwards, Yuriy Brun, Hossein Tajalli, Joshua Garcia, Ivo Krka, Nenad Medvidovic, Marija Mikic-Rakic, Gaurav Sukhatme. "An Architecture-Driven Software Mobility Framework." *Journal of Systems and Software (JSS)*, special issue on Software Architecture and Mobility, Vol. 83, No. 6, pages 972-989, June 2010.

J2. Sam Malek, Marija Mikic-Rakic, and Nenad Medvidovic. "A Style-Aware Architectural Middleware for Resource-Constrained, Distributed Systems." *IEEE Transactions on Software Engineering (TSE)*, Vol. 31, No. 3, pages 256-272, March 2005.

J1. Nenad Medvidovic, Marija Mikic-Rakic, Nikunj Mehta, and Sam Malek. "Software Architectural Support for Handheld Computing." *IEEE Computer – Special Issue on Handheld Computing,* Vol. 36, No. 9, pages 66-73, September 2003.

5.2 CONFERENCE PUBLICATIONS

C104. Syed Fatiul Huq, Ziyao He, Yirui He, and Sam Malek. "Bridging the Gap between Automated Intervention and Actual User Experience: A Mixed-Methods Study on Mobile Accessibility Issues for Screen Reader Users." In *proceedings of the ACM CHI Conference on Human Factors in Computing Systems (CHI 2026)*, Barcelona, Spain, April 2026. (25% acceptance rate)

C103. Shubhi Jain, Syed Fatiul Huq, Ziyao He, and Sam Malek. "Automated Detection of Web Application Navigation Barriers for Screen Reader Users." In *proceedings of the 40th IEEE/ACM International Conference on Automated Software Engineering (ASE 2025)*, Seoul, South Korea, November 2025. (20% acceptance rate)

C102. Ziyao He, Syed Fatiul Huq, and Sam Malek. "Enhancing Web Accessibility: Automated Detection of Issues with Generative AI." In *proceedings of the ACM International Conference on the Foundations of Software Engineering (FSE 2025)*, Trondheim, Norway, June 2025. (22% acceptance rate)

C101. Benyamin Beyzaei, Saghar Talebipour, Ghazal Rafiei, Nenad Medvidovic, and Sam Malek. "Automated Test Transfer Across Android Apps Using Large Language Models." In *proceedings of the 34th ACM SIGSOFT International Symposium on Software Testing and Analysis (ISSTA 2025)*, Trondheim, Norway, June 2025. (19% acceptance rate)

C100. Forough Mehralian, Ziyao He, and Sam Malek. "Automated Accessibility Analysis of Dynamic Content Changes on Mobile Apps." In *proceedings of the 47th IEEE/ACM International Conference on Software Engineering (ICSE 2025)*, Ottawa, Canada, April 2025.

C99. Syed Fatiul Huq, Mahan Tafreshipour, Kate Kalcevich, and Sam Malek. "Automated Generation of Accessibility Test Report from Recorded User Transcripts." In *proceedings of the 47th IEEE/ACM International Conference on Software Engineering (ICSE 2025)*, Ottawa, Canada, April 2025.

C98. Mahan Tafreshipour, Anmol Deshpande, Forough Mehralian, Iftekhar Ahmed, and Sam Malek. "Ma11y: A Mutation Framework for Web Accessibility Testing." In *proceedings of the 33rd ACM SIGSOFT International Symposium on Software Testing and Analysis (ISSTA 2024)*, Vienna, Austria, September 2024.

C97. Ziyao He, Syed Fatiul Huq, and Sam Malek. ""I tend to view ads almost like a pestilence": On the Accessibility Implications of Mobile Ads for Blind Users." In *proceedings of the 46th IEEE/ACM*

Qomplx LLC, Exhibit 2023
Page 2023 - 57
IPR2026-00182, Microsoft Corp. v. Qomplx LLC

International Conference on Software Engineering (ICSE 2024), Lisbon, Portugal, April 2024. (22% acceptance rate)

C96. Pooja Naresh Bhatia, and Sam Malek. "A Historical Review of Web Accessibility Using WAVE." In *proceedings of the 5th Workshop on Gender Equality, Diversity, and Inclusion in Software Engineering (GE 2024)*, Lisbon, Portugal, April 2024.

C95. Syed Fatiul Huq, Abdulaziz Alshayban, Ziayo He, and Sam Malek. "#AllyDev: Understanding Contemporary Software Accessibility Practices from Twitter Conversations." In *proceedings of the ACM CHI Conference on Human Factors in Computing Systems (CHI 2023)*, Hamburg, Germany, April 2023. (28% acceptance rate)

C94. Navid Salehnamadi, Ziyao He, and Sam Malek. "Assistive-Technology Aided Manual Accessibility Testing in Mobile Apps, Powered by Record-and-Replay." In *proceedings of the ACM CHI Conference on Human Factors in Computing Systems (CHI 2023)*, Hamburg, Germany, April 2023. (28% acceptance rate)

C93. Abdulaziz Alshayban, and Sam Malek. "AccessiText: Automated Detection of Text Accessibility Issues in Android Apps." In *proceeding of the 30th ACM Joint European Software Engineering Conference and Symposium on the Foundations of Software Engineering (ESEC/FSE 2022)*, Singapore, November 2022. (22% acceptance rate)

C92. Forough Mehralian, Navid Salehnamadi, Syed Fatiul Huq, and Sam Malek. "Too Much Accessibility is Harmful! Automated Detection and Analysis of Overly Accessible Elements in Mobile Apps." In *proceedings of the 37th IEEE/ACM International Conference on Automated Software Engineering (ASE 2022)*, Michigan, United States, October 2022. (21% acceptance rate)

C91. Navid Salehnamadi, Forough Mehralian, and Sam Malek. "Groundhog: An Automated Accessibility Crawler for Mobile Apps." In *proceedings of the 37th IEEE/ACM International Conference on Automated Software Engineering (ASE 2022)*, Michigan, United States, October 2022. (21% acceptance rate)

C90. Jun-Wei Lin and Sam Malek. "GUI Test Transfer from Web to Android." In *proceedings of the 15th IEEE International Conference on Software Testing, Verification and Validation (ICST 2022)*, Virtual Event, April 2022. (26% acceptance rate)

C89. Mahmoud Hammad, Ibrahim Abueisa, and Sam Malek. "Tool-Assisted Componentization of Java Applications." In *proceedings of the 19th IEEE International Conference on Software Architecture (ICSA 2022)*, Honolulu, Hawaii, March 2022. (20% acceptance rate)

C88. Faraz YazdaniBanafsheDaragh and Sam Malek. "Deep GUI: Black-box GUI Input Generation with Deep Learning." In *proceedings of the IEEE/ACM Automated Software Engineering Conference (ASE 2021)*, Melbourne, Australia, November 2021. (27% acceptance rate)

C87. Forough Mehralian, Navid Salehnamadi, and Sam Malek. "Data-Driven Accessibility Repair Revisited: On the Effectiveness of Generating Labels for Icons in Android Apps." In *proceedings of the ACM Joint European Software Engineering Conference and Symposium on the Foundations of Software Engineering (ESEC/FSE 2021)*, Athens, Greece, August 2021. (24% acceptance rate)

C86. Navid Salehnamadi, Abdulaziz Alshayban, Jun-Wei Lin, Iftekhar Ahmed, Stacy Branham, and Sam Malek. "Latte: Use-Case Assistive-Service Driven Automated Accessibility Testing Framework for Android." In *proceedings of the ACM Conference on Human Factors in Computing System (CHI 2021)*, Yokohama, Japan, May 2021. (26% acceptance rate)

C85. Joshua Garcia, Mehdi Mirakhorli, Lu Xiao, Yutong Zhao, Ibrahim Mujhid, Khoi Pham, Ahmet Okutan, Sam Malek, Rick Kazman, Yuanfang Cai, and Nenad Medvidovic. "Constructing a Shared Infrastructure for Software Architecture Analysis and Maintenance." In *proceedings of the IEEE*

Qomplx LLC, Exhibit 2023
Page 2023 - 58
IPR2026-00182, Microsoft Corp. v. Qomplx LLC

International Conference on Software Architecture (ICSA 2021), Stuttgart, Germany, March 2021. (28% acceptance rate)

C84. Navid Salehnamadi, Abdulaziz Alshayban, Iftekhar Ahmed, and Sam Malek. "ER Catcher: A Static Analysis Framework for Accurate and Scalable Even-Race Detection in Android." In *proceedings of the 35th IEEE/ACM International Conference on Automated Software Engineering (ASE 2020)*, Melbourne, Australia, September 2020. (22% acceptance rate)

C83. Jun-Wei Lin, Navid Salehnamadi, and Sam Malek. "Test Automation in Open-Source Android Apps: A Large-Scale Empirical Study." In *proceedings of the 35th IEEE/ACM International Conference on Automated Software Engineering (ASE 2020)*, Melbourne, Australia, September 2020. (22% acceptance rate)

C82. Reyhaneh Jabbarvand, Forough Mehralian, and Sam Malek. "Automated Construction of Energy Test Oracle for Android." In *proceeding of the ACM joint meeting of the European Software Engineering Conference and ACM SIGSOFT Symposium on the Foundations of Software Engineering (ESEC/FSE 2020)*, Sacramento, CA, November 2020. (28% acceptance rate)

C81. Navid Salehnamadi, Abdulaziz Alshayban, Iftekhar Ahmed, and Sam Malek. "A Benchmark for Event-Race Analysis in Android Apps." In *proceedings of the 18th ACM International Conference on Mobile Systems, Applications, and Services (MobiSys 2020)*, *Poster track*, Toronto, Canada, June 2020.

C80. Abdulaziz Alshayban, Iftekhar Ahmed, and Sam Malek. "Accessibility Issues in Android Apps: State of Affairs, Sentiments, and Ways Forward." In *proceedings of the 42nd International Conference on Software Engineering (ICSE 2020)*, Seoul, South Korea, May 2020. (22% acceptance rate)

C79. Jun-Wei Lin, Reyhaneh Jabbarvand, and Sam Malek. "Test Transfer Across Mobile Apps Through Semantic Mapping." In p*roceedings of the 34th International Conference on Automated Software Engineering (ASE 2019)*, San Diego, USA, November 2019. (21% acceptance rate)

C78. Reyhaneh Jabbarvand, Jun-Wei Lin, and Sam Malek. "Search-Based Energy Testing of Android." In *proceedings of the 41st International Conference on Software Engineering (ICSE 2019)*, Montreal, Canada, May 2019. (21% acceptance rate)

C77. Negar Ghorbani, Joshua Garcia, and Sam Malek. "Detection and Repair of Architectural Inconsistences in Java." In *proceedings of the 41st International Conference on Software Engineering (ICSE 2019)*, Montreal, Canada, May 2019. (21% acceptance rate)

C76. Mahmoud Hammad, Joshua Garcia, and Sam Malek. "SALMA: Self-Protection of Android Systems from Inter-Component Communication Attacks." In *proceedings of the 33rd IEEE/ACM International Conference on Automated Software Engineering (ASE 2018)*, Montpellier, France, September 2018. (19% acceptance rate)

C75. Hamid Bagheri, Jianghao Wang, Jarod Aerts, and Sam Malek. "Efficient, Evolutionary Security Analysis of Interacting Android Apps." In *proceedings of the 34th IEEE International Conference on Software Maintenance and Evolution (ICSME 2018)*, Madrid, Spain, September 2018. (25% acceptance rate - best paper nominee)

C74. Alireza Sadeghi, Reyhaneh Jabbarvand, Negar Ghorbani, Hamid Bagheri, and Sam Malek. "A Temporal Permission Analysis and Enforcement Framework for Android." In *proceedings of the 40th International Conference of Software Engineering (ICSE 2018*), Gothenburg, Sweden, May 2018. (21% acceptance rate).

C73. Jun-Wei Lin, Reyhaneh Jabbarvand, Joshua Garcia, and Sam Malek. "Nemo: Multi-Criteria Test-Suite Minimization with Integer Nonlinear Programming." In *proceedings of the 40th International*

Qomplx LLC, Exhibit 2023
Page 2023 - 59
IPR2026-00182, Microsoft Corp. v. Qomplx LLC

Conference of Software Engineering (ICSE 2018), Gothenburg, Sweden, May 2018. (21% acceptance rate).

C72. Mahmoud Hammad, Joshua Garcia, and Sam Malek. "A Large-Scale Empirical Study on the Effects of Code Obfuscations on Android Apps and Anti-Malware Products." In *proceedings of the 40th International Conference of Software Engineering (ICSE 2018), Gothenburg, Sweden, May 2018. (21% acceptance rate).*

C71. Joshua Garcia, Mahmoud Hammad, Negar Ghorbani, and Sam Malek. "Automatic Generation of Inter-Component Communication Exploits for Android Applications." In *proceedings of the 11th Joint Meeting of the European Software Engineering Conference and the ACM SIGSOFT Symposium on the Foundations of Software Engineering (ESEC/FSE 2017)*, Paderborn, Germany, September 2017. (24% acceptance rate)

C70. Alireza Sadeghi, Reyhaneh Jabbarvand, and Sam Malek. "PATDroid: Permission-Aware GUI Testing of Android." In *proceedings of the 11th Joint Meeting of the European Software Engineering Conference and the ACM SIGSOFT Symposium on the Foundations of Software Engineering (ESEC/FSE 2017)*, Paderborn, Germany, September 2017. (24% acceptance rate)

C69. Reyhaneh Jabbarvand and Sam Malek. "µDroid: An Energy-Aware Mutation Testing Framework for Android." In *proceedings of the 11th Joint Meeting of the European Software Engineering Conference and the ACM SIGSOFT Symposium on the Foundations of Software Engineering (ESEC/FSE 2017)*, Paderborn, Germany, September 2017. (24% acceptance rate)

C68. Alireza Sadeghi, Naeem Esfahani and Sam Malek. "Mining Mobile App Markets for Prioritization of Security Assessment Effort." In *proceedings of the 2nd International Workshop on App Market Analytics*, Paderborn, Germany, September 2017.

C67. Mahmoud Hammad, Hamid Bagheri, and Sam Malek. "DELDroid: Determination and Enforcement of Least-Privilege Architecture in Android." In *proceedings of the IEEE International Conference on Software Architecture (ICSA 2017)*, Gothenburg, Sweden, April 2017. (22% acceptance rate – best paper nominee)

C66. Hamid Bagheri and Sam Malek. "Titanium: Efficient Analysis of Evolving Alloy Specifications." In *proceedings of the 24th ACM SIGSOFT International Symposium on the Foundations of Software Engineering (FSE 2016)*, Seattle, WA, November 2016. (27% acceptance rate)

C65. Bradley Schmerl, Jeff Gennari, Alireza Sadeghi, Hamid Bagheri, Sam Malek, Javier Camara, and David Garlan. "Architecture Modeling and Analysis of Security in Android Systems." In *proceedings of the 10th European Conference on Software Architecture (ECSA 2016)*, Istanbul, Turkey, September 2016. (14% acceptance rate for full papers)

C64. Reyhaneh Jabbarvand, Alireza Sadeghi, Hamid Bagheri, and Sam Malek. "Energy-Aware Test-Suite Minimization for Android Apps." In *proceedings of the International Symposium on Software Testing and Analysis (ISSTA 2016)*, Saarbrücken, Germany, July 2016. (25% acceptance rate)

C63. Hamid Bagheri, Alireza Sadeghi, Reyhaneh Jabbarvand Behrouz, and Sam Malek. "Practical, Formal Synthesis and Autonomic Enforcement of Security Policies for Android." In *proceedings of the 46th Annual IEEE/IFIP International Conference on Dependable Systems and Networks (DSN 2016)*, Toulouse, France, June 2016. (20% acceptance rate)

C62. Nariman Mirzaei, Joshua Garcia, Hamid Bagheri, Alireza Sadeghi, and Sam Malek. "Reducing Combinatorics in GUI Testing of Android Applications." In *proceedings of the 38th International Conference on Software Engineering (ICSE 2016)*, Austin, TX, May 2016. (19% acceptance rate)

Qomplx LLC, Exhibit 2023
Page 2023 - 60
IPR2026-00182, Microsoft Corp. v. Qomplx LLC

C61. Eric Yuan and Sam Malek. "Mining Software Component Interactions to Detect Security Threats at the Architectural Level." In *proceedings of the 13th Working IEEE/IFIP Conference on Software Architecture (WICSA 2016)*, Venice, Italy, April 2016. (20% acceptance rate)

C60. Nariman Mirzaei, Hamid Bagheri, Riyadh Mahmood, and Sam Malek. "SIG-Droid: Automated System Input Generation for Android Applications." In *proceedings of the 26th IEEE International Symposium on Software Reliability Engineering (ISSRE 2015)*, Gaithersburg, MD, November 2015. (19% acceptance rate)

C59. Hamid Bagheri, Eunsuk Kang, Sam Malek, and Daniel Jackson. "Detection of Design Flaws in Android Permission Protocol through Bounded Verification." In *proceedings of the 20th International Symposium on Formal Methods (FM 2015)*, Oslo, Norway, June 2015. (26% acceptance rate – best paper nominee)

C58. Ehsan Kouroshfar, Mehdi Mirakhorli, Hamid Bagheri, Lu Xiao, Sam Malek, and Yuanfang Cai. "A Study on the Role of Software Architecture in the Evolution and Quality of Software." In *proceedings of the 12th Working Conference on Mining Software Repositories (MSR 2015)*, Florence, Italy, May 2015. (30% acceptance rate)

C57. Reyhaneh Jabbarvand, Alireza Sadeghi, Joshua Garcia, Sam Malek, and Paul Ammann. "EcoDroid: An Approach for Energy-Based Ranking of Android Apps." In *proceedings of the 4th International Workshop on Green and Sustainable Software (GREENS 2015)*, Florence, Italy, May 2015.

C56. Alireza Sadeghi, Hamid Bagheri, and Sam Malek. "Analysis of Android Inter-App Security Vulnerabilities Using COVERT." In *proceedings of the 37th International Conference on Software Engineering (ICSE 2015), Demonstrations Track*, Florence, Italy, May 2015.

C55. Riyadh Mahmood, Nariman Mirzaei, and Sam Malek. "EvoDroid: Segmented Evolutionary Testing of Android Apps." In *proceedings of the 22nd ACM SIGSOFT International Symposium on the Foundations of Software Engineering (FSE 2014)*, Hong Kong, China, November 2014. (22% acceptance rate)

C54. Sam Malek, Hamid Bagheri, and Alireza Sadeghi." Automated Detection and Mitigation of Inter-Application Security Vulnerabilities in Android." In *proceedings of the 2nd International Workshop on Software Development Lifecycle for Mobile (DeMobile 2014)*. Hong Kong, China, November 2014.

C53. Eric Yuan, Naeem Esfahani, and Sam Malek. "Automated Mining of Software Component Interactions for Self-Adaptation." In *proceedings of the 9th International Symposium on Software Engineering for Adaptive and Self-Managing Systems (SEAMS 2014)*, Hyderabad, India, June 2014. (19% acceptance rate – best paper nominee)

C52. Alireza Sadeghi, Naeem Esfahani, and Sam Malek. "Mining the Categorized Software Repositories to Improve the Analysis of Security Vulnerabilities." In *proceedings of the 17th International Conference on Fundamental Approaches to Software Engineering (FASE 2014)*, Grenoble, France, April 2014. (22% acceptance rate)

C51. Eric Yuan, Sam Malek, Bradley Schmerl, David Garlan, and Jeff Gennari. "Architecture-Based Self-Protecting Software Systems." In *proceedings of the 9th International ACM SIGSOFT Conference on Quality of Software Architectures (QoSA 2013)*, Vancouver, Canada, June 2013.

C50. Naeem Esfahani, Sam Malek, Kaveh Razavi. "GuideArch: Guiding the Exploration of Architectural Solution Space under Uncertainty." In *proceedings of the 35th International Conference on Software Engineering (ICSE 2013)*, San Francisco, California, May 2013. (18% acceptance rate)

Qomplx LLC, Exhibit 2023
Page 2023 - 61
IPR2026-00182, Microsoft Corp. v. Qomplx LLC

C49. Kyle R. Canavera, Naeem Esfahani, and Sam Malek. "Mining the Execution History of a Software System to Infer the Best Time for its Adaptation." In *proceedings of the 20th ACM SIGSOFT International Symposium on the Foundations of Software Engineering (FSE 2012)*, Cary, North Carolina, November 2012. (17% acceptance rate)

C48. Naeem Esfahani, Kaveh Razavi, Sam Malek. "Dealing with Uncertainty in Early Software Architecture." In *proceedings of the 20th ACM SIGSOFT International Symposium on the Foundations of Software Engineering (FSE 2012)*, New Ideas and Emerging Results track, Cary, North Carolina, November 2012. (20% acceptance rate)

C47. Nariman Mirzaei, Sam Malek, Corina S. Păsăreanu, Naeem Esfahani, Riyadh Mahmood. "Testing Android Apps through Symbolic Execution." In *proceedings of the Java Pathfinder Workshop (JPF 2012)*, Cary, North Carolina, November 2012.

C46. Riyadh Mahmood, Naeem Esfahani, Thabet Kacem, Nariman Mirzaei, Sam Malek, and Angelos Stavrou. "A Whitebox Approach for Automated Security Testing of Android Applications on the Cloud." In *proceedings of the 7th International Workshop on Automation of Software Test (AST 2012)*, Zurich, Switzerland, June 2012.

C45. Sam Malek, Naeem Esfahani, Thabet Kacem, Riyadh Mahmood, Nariman Mirzaei, and Angelos Stavrou. "A Framework for Automated Security Testing of Android Applications on the Cloud." In *proceedings of the 6th International Conference on Software Security and Reliability (SERE 2012)*, Washington, District of Columbia, June 2012.

C44. Eric Yuan, and Sam Malek. "A Taxonomy and Survey of Self-Protecting Software Systems." In *proceedings of the* 7th *International Symposium on Software Engineering for Adaptive and Self-Managing Systems (SEAMS 2012)*, Zurich, Switzerland, June 2012. (30% acceptance rate – best paper nominee)

C43. Danny Weyns, M. Usman Iftikhar, Sam Malek, and Jesper Andersson. "Claims and Supporting Evidence for Self-Adaptive Systems – A Literature Study." In *proceedings of the* 7th *International Symposium on Software Engineering for Adaptive and Self-Managing Systems (SEAMS 2012)*, Zurich, Switzerland, June 2012. (30% acceptance rate)

C42. Naeem Esfahani, Ehsan Kouroshfar, and Sam Malek. "Taming Uncertainty in Self-Adaptive Software." In *proceedings of the 8th joint meeting of the European Software Engineering Conference and ACM SIGSOFT Symposium on the Foundations of Software Engineering (ESEC/FSE 2011)*, Szeged, Hungary, September 2011. (16% acceptance rate)

C41. Pieter Vromant, Danny Weyns, Sam Malek, and Jesper Andersson. "On Interacting Control Loops in Self-Adaptive Systems." In *proceedings of the 6th International Symposium on Software Engineering for Adaptive and Self-Managing Systems (SEAMS 2011)*, Honolulu, Hawaii, May 2011. (27% acceptance rate)

C40. Ahmed Elkhodary, Naeem Esfahani, and Sam Malek. "FUSION: A Framework for Engineering Self-Tuning Self-Adaptive Software Systems." In *proceedings of the 18th ACM SIGSOFT International Symposium on the Foundations of Software Engineering (FSE 2010)*, Santa Fe, New Mexico, November 2010. (20% acceptance rate)

C39. Deshan Cooray, Sam Malek, Roshanak Roshandel, and David Kilgore. "RESISTing Reliability Degradation through Proactive Reconfiguration." In *proceedings of the 25th IEEE/ACM International Conference on Automated Software Engineering (ASE 2010)*, Antwerp, Belgium, September 2010. (17% acceptance rate)

C38. Naeem Esfahani, and Sam Malek. "Utilizing Architectural Styles to Enhance Adaptation Support in Middleware Platforms." In *proceedings of the 4th European Conference on Software Architectures (ECSA 2010)*, Copenhagen, Denmark, August 2010.

C37. Deshan Cooray, Sam Malek, and Roshanak Roshandel. "Context-Driven Optimization of Mobile Service-Oriented Systems for Improving their Resilience." In *proceedings of the IEEE International Workshop on Engineering Mobile Service-Oriented Systems (EMSOS 2010)*, Miami, FL, July 2010.

C36. Danny Weyns, Sam Malek, and Jesper Andersson. "FORMS: A Formal Reference Model for Self-Adaptation." In *proceedings of the 7th IEEE International Conference on Autonomic Computing (ICAC 2010)*, Washington, DC, June 2010. (25% acceptance rate)

C35. Daniel A. Menasce, Joao Pedro Sousa, Sam Malek, and Hassan Gomaa. "QoS Architectural Patterns for Self-Architecting Software Systems." In *proceedings of the 7th IEEE International Conference on Autonomic Computing (ICAC 2010)*, Washington, DC, June 2010. (25% acceptance rate)

C34. Naeem Esfahani, and Sam Malek. "Social Computing Networks: A New Paradigm for Engineering Pervasive Software Systems." In *proceedings of the 32nd International Conference on Software Engineering (ICSE 2010),* New Ideas and Emerging Results Track, Cape Town, South Africa, May 2010. (25% acceptance rate)

C33. Danny Weyns, Sam Malek, and Jesper Andersson. "On Decentralized Self-Adaptation: Lessons from the Trenches and Challenges for the Future." In *proceedings of the ICSE workshop on Software Engineering for Adaptive and Self-Managing Systems (SEAMS 2010)*, Cape Town, South Africa, May 2010.

C32. Joao Pedro Sousa, Zeynep Zengin, and Sam Malek. "Towards Multi-Design of Situated Service-Oriented Systems." In proceedings of the ICSE workshop on Principles of Engineering Service Oriented Systems (PESOS 2010), Cape Town, South Africa, May 2010.

C31. Hassan Gomaa, Koji Hashimoto, Minseong Kim, Sam Malek, and Daniel A. Menasce. "Software Adaptation Patterns for Service-Oriented Architectures." In *proceedings of the 25th ACM Symposium on Applied Computing (SAC 2010), Dependable and Adaptive Distributed Systems (DADS) track*, Sierre, Switzerland, March 2010. (30% acceptance rate)

C30. Daniel A. Menasce, John M. Ewing, Hassan Gomaa, Sam Malek, and Joao P. Sousa. "A Framework for Utility-Based Service Oriented Design in SASSY." In *proceedings of the Joint WOSP/SIPEW International Conference on Performance Engineering (WOSP/SIPEW 2010)*, San Jose, California, January 2010. (25% acceptance rate)

C29. Ahmed Elkhodary, Sam Malek, and Naeem Esfahani. "On the Role of Features in Analyzing the Architecture of Self-Adaptive Software Systems." In *proceedings of the 4th International Workshop on Models at Runtime (MRT 2009)*, Denver, Colorado, October 2009. (20% acceptance rate for full papers)

C28. Naeem Esfahani, Sam Malek, Joao Pedro Sousa, Hassan Gomaa, and Daniel A. Menasce. "A Modeling Language for Activity-Oriented Composition of Service-Oriented Software Systems." In *proceedings of the ACM/IEEE 12th International Conference on Model Driven Engineering Languages and Systems (MODELS 2009)*, Denver, Colorado, October 2009. (16% acceptance rate)

C27. Chiyoung Seo, George Edwards, Daniel Popescu, Sam Malek, and Nenad Medvidovic. "A Framework for Estimating the Energy Consumption Induced by a Distributed System's Architectural Style." In *proceedings of the ESEC/FSE workshop on Specification and Verification of Component-Based Systems (SAVCBS 2009)*, Amsterdam, Netherlands, August 2009.

C26. Sam Malek, Roshanak Roshandel, David Kilgore, and Ibrahim Elhag. "Improving the Reliability of Mobile Software Systems through Continuous Analysis and Proactive Reconfiguration." In *proceedings of the International Conference on Software Engineering (ICSE 2009)*, New Ideas and Emerging Results Track, Vancouver, Canada, May 2009. (17% acceptance rate)

C25. Jesper Anderson, Rogerio de Lemos, Sam Malek, and Danny Weyns. "Reflecting on Self-Adaptive Software Systems." In *proceedings of the ICSE 2009 Workshop on Software Engineering for Adaptive and Self-Managing Systems (SEAMS 2009)*, Vancouver, Canada, May 2009.

C24. Sam Malek, Naeem Esfahani, Danny Menasce, Joao Sousa, and Hassan Gomaa. "Self-Architecting Software Systems (SASSY) from QoS-Annotated Activity Models." In *proceedings of the ICSE 2009 Workshop on Principles of Engineering Service-Oriented Systems (PESOS 2009)*, Vancouver, Canada, May 2009. (23% acceptance rate)

C23. Chiyoung Seo, Sam Malek, and Nenad Medvidovic. "Component-Level Energy Consumption Estimation for Distributed Java-Based Software Systems." In *proceedings of the 11th International Symposium on Component Based Software Engineering (CBSE 2008)*, Karlsruhe, Germany, October 2008.

C22. Sam Malek. "Dealing with the Crosscutting Structure of Software Architectural Styles." In *proceedings of the 32nd Annual IEEE International Computer Software and Applications Conference (COMPSAC 2008)*, Turku, Finland, July 2008. (20% acceptance rate)

C21. Marija Mikic-Rakic, Sam Malek, and Nenad Medvidovic. "Architecture-Driven Software Mobility in Support of QoS Requirements." In *proceedings of the International Workshop on Software Architectures and Mobility (SAM 2008)*, Leipzig, Germany, May 2008.

C20. Roshanak Roshandel, and Sam Malek. "Refining Reliability Estimation of Mobile Software Systems." In *proceedings of the International Workshop on Software Architectures and Mobility (SAM 2008)*, Leipzig, Germany, May 2008.

C19. Chiyoung Seo, Sam Malek, and Nenad Medvidovic. "Estimating the Energy Consumption in Pervasive Java-Based Systems." In *proceedings of the 6th IEEE International Conference on Pervasive Computing and Communications (PerCom 2008)*, Hong Kong, March 2008.

C18. Sam Malek. "Effective Realization of Software Architectural Styles with Aspects." In *proceedings of the 7th Working IEEE/IFIP Conference on Software Architecture (WICSA 2008)*, Vancouver, BC, Canada, February 2008.

C17. Chiyoung Seo, George Edwards, Sam Malek, and Nenad Medvidovic. "A Framework for Estimating the Impact of a Distributed Software System's Architectural Style on its Energy Consumption." In *proceedings of the 7th Working IEEE/IFIP Conference on Software Architecture (WICSA 2008)*, Vancouver, BC, Canada, February 2008.

C16. George Edwards, Chiyoung Seo, Daniel Popescu, Sam Malek, and Nenad Medvidovic. "Self-* Software Architectures and Component Middleware in Pervasive Environments." In *proceedings of the 5th International Workshop on Middleware for Pervasive and Ad-Hoc Computing (MPAC 2007)*, Newport Beach, California, November 2007.

C15. Chiyoung Seo, Sam Malek, and Nenad Medvidovic. "An Energy Consumption Framework for Distributed Java-Based Systems." In *proceedings of the 22nd IEEE/ACM International Conference on Automated Software Engineering (ASE 2007)*, Atlanta, Georgia, November 2007.

C14. Nenad Medvidovic, and Sam Malek. "Software Deployment Architecture and Quality-of-Service in Pervasive Environments." In *proceedings of the International Workshop on the Engineering of Software Services for Pervasive Environments (ESSPE 2007)*, Dubrovnik, Croatia, September 2007.

C13. Sam Malek, Chiyoung Seo, Sharmila Ravula, Brad Petrus, and Nenad Medvidovic. "Reconceptualizing a Family of Heterogeneous Embedded Systems via Explicit Architectural Support." In *proceedings of the 29th International Conference on Software Engineering (ICSE 2007)*, Minneapolis, Minnesota, May 2007. (25% acceptance rate)

C12. Chiyoung Seo, Sam Malek, George Edwards, Nenad Medvidovic, Brad Petrus, and Sharmila Ravula. "Exploring the Role of Software Architecture in Dynamic and Fault Tolerant Pervasive Systems." In *proceedings of the Workshop on Software Engineering of Pervasive Computing Applications, Systems and Environments (SEPCASE 07)*, Minneapolis, Minnesota, May 2007.

C11. George Edwards, Sam Malek, and Nenad Medvidovic. "Scenario-Driven Dynamic Analysis of Distributed Architectures." In *proceedings of the 10th International Conference on Fundamental Approaches to Software Engineering (FASE 2007),* Braga, Portugal, March 2007. (15% acceptance rate)

C10. Sam Malek, Chiyoung Seo, and Nenad Medvidovic. "Tailoring an Architectural Middleware Platform to a Heterogeneous Embedded Environment." In *proceedings of the 6th International Workshop on Software Engineering and Middleware (SEM 2006)*, Portland, Oregon, November 2006.

C9. Sam Malek. "A User-Centric Framework for Improving a Distributed Software System's Deployment Architecture." In *proceedings of the doctoral track at the 14th ACM SIGSOFT Symposium on Foundation of Software Engineering (FSE 2006)*, Portland, Oregon, November 2006.

C8. Sam Malek, Chiyoung Seo, Sharmila Ravula, Brad Petrus, and Nenad Medvidovic. "Providing Middleware-Level Facilities to Support Architecture-Based Development of Software Systems in Pervasive Environments." In *proceedings of the 4th International Workshop on Middleware for Pervasive and Ad-Hoc Computing (MPAC 2006)*, Melbourne, Australia, November 2006.

C7. Sam Malek, Marija Mikic-Rakic, and Nenad Medvidovic. "A Decentralized Redeployment Algorithm for Improving the Availability of Distributed Systems." In *proceedings of the 3rd International Conference on Component Deployment (CD 2005)*, Grenoble, France, November 2005.

C6. Marija Mikic-Rakic, Sam Malek, and Nenad Medvidovic. "Improving Availability in Large, Distributed, Component-Based Systems via Redeployment." In *proceedings of the 3rd International Conference on Component Deployment (CD 2005)*, Grenoble, France, November 2005.

C5. Christian Mattmann, Sam Malek, Nels Beckman, Marija Mikic-Rakic, Nenad Medvidovic, and Daniel Crichton. "GLIDE: A Grid-based Lightweight Infrastructure for Data-intensive Environments." In *proceedings of the European Grid Conference (EGC 2005)*, Amsterdam, Netherlands, February 2005.

C4. Sam Malek, Marija Mikic-Rakic, Nenad Medvidovic. "An Extensible Framework for Autonomic Analysis and Improvement of Distributed Deployment Architectures." In *proceedings of the ACM SISGSOFT Workshop on Self-Managed Systems (WOSS 2004)*, Newport Beach, California, October 2004.

C3. Marija Mikic-Rakic, Sam Malek, Nels Beckman, and Nenad Medvidovic. "A Tailorable Environment for Assessing the Quality of Deployment Architectures in Highly Distributed Settings." In *proceedings of the 2nd International Conference on Component Deployment (CD 2004)*, Edinburgh, Scotland, May 2004.

C2. Marija Mikic-Rakic, Sam Malek, Nels Beckman, and Nenad Medvidovic. "Improving Availability of Distributed Event-Based Systems via Run-Time Monitoring and Analysis." In *proceedings of the Twin Workshop on Architecting Dependable Systems (WADS 2004)*, Edinburgh, UK, May 2004, and Florence, Italy, June 2004.

C1. Nenad Medvidovic, Sam Malek, and Marija Mikic-Rakic. "Software Architectures and Embedded Systems." In *proceedings of the Monterey Workshop on Software Engineering for Embedded Systems*, Chicago, Illinois, September 24-26, 2003.

5.3 BOOK CHAPTERS

B9. Sam Malek, Hamid Bagheri, Joshua Garcia, and Alireza Sadeghi. "Security and Software Engineering." In *Handbook of Software Engineering*, Editors Kyo Chul Kang, Richard Taylor, and Sungdeok Cha, Springer, 1st edition, 2019.

B8. Danny Weyns, Nelly Bencomo, Radu Calinescu, Javier Camara, Carlo Ghezzi, Vincenzo Grassi, Larse Grunske, Paola Inverardi, Jean-Marc Jezequel, Sam Malek, Raffaela Mirandola, Marco Mori, Giordano Tamburrelli. "Perpetual Assurances for Self-Adaptive Systems." In *Software Engineering for Self-Adaptive Systems 3*, Editors R. de Lemos, D. Garlan, C. Ghezzi, and H. Giese, Lecture Notes in Computer Science, Springer, 2017.

B7. Sam Malek, Kyle Canavera, and Naeem Esfahani. "Automated Inference Techniques to Assist with the Construction of Self-Adaptive Software." In *Managing Trade-offs in Adaptable Software Architectures.* Editors I. Mistrik, N. Ali, J. Grundy, R. Kazman, and B. Schmerl. Elsevier, 2016.

B6. Naeem Esfahani, and Sam Malek. "Uncertainty in Self-Adaptive Software Systems." In *Software Engineering for Self-Adaptive Systems 2*, Editors R. de Lemos, H. Giese, H. Müller, and M. Shaw. Lecture Notes in Computer Science Hot Topics, Springer, 2013.

B5. Danny Weyns, Bradley Schmerl, Vincenzo Grassi, Sam Malek, Raffaela Mirandola, Christian Prehofer, Jochen Wuttke, Jesper Andersson, Holger Giese, and Karl Goschka. "On Patterns for Decentralized Control in Self-Adaptive Systems." In *Software Engineering for Self-Adaptive Systems 2*, Editors R. de Lemos, H. Giese, H. Müller, and M. Shaw. Lecture Notes in Computer Science Hot Topics, Springer, 2012.

B4. Rogerio de Lemos, Holger Giese, Hausi Muller, Mary Shaw, Jesper Andersson, Luciano Baresi, Basil Becker, Nelly Bencomo, Yuriy Brun, Bojan Cikic, Ron Desmarais, Schahram Dustdar, Gregor Engels, Kurt Geihs, Karl M. Goeschka, Alessandra Gorla, Vincenzo Grassi, Poala Inverardi, Gabor Karsai, Jeff Kramer, Marin Litoiu, Antonia Lopes, Jeff Magee, Sam Malek, Serge Mankovskii, Raffaela Mirandola, John Mylopoulos, Oscar Nierstrasz, Mauro Pezze, Christian Prehofer, Wilhelm Schafer, Wilhelm Schlichting, Bradley Schmerl, Dennis B. Smith, Joao P. Sousa, Gabriel Tamura, Ladan Tahvildari, Norha M. Villegas, Thomas Vogel, Danny Weyns, Kenny Wong, Jochen Wuttke. "Software Engineering for Self-Adaptive Systems: A second Research Roadmap." In *Software Engineering for Self-Adaptive Systems 2,* Editors R. de Lemos, H. Giese, H. Müller, and M. Shaw. Lecture Notes in Computer Science Hot Topics, Springer, 2012.

B3. Jesper Andersson, Rogerio de Lemos, Sam Malek, and Danny Weyns. "Modeling Dimensions of Self-Adaptive Software Systems." In *Software Engineering for Self-Adaptive Systems,* Editors B. H. C. Cheng, R. de Lemos, H. Giese, P. Inverardi, and J. Magee, Lecture Notes in Computer Science Hot Topics, Springer, 2009.

B2. Betty H. C. Cheng, Rogério de Lemos, Holger Giese, Paola Inverardi, Jeff Magee, Jesper Andersson, Basil Becker, Nelly Bencomo, Yuriy Brun, Bojan Cukic, Giovanna Di Marzo Serugendo, Schahram Dustdar, Anthony Finkelstein, Cristina Gacek, Kurt Geihs, Vincenzo Grassi, Gabor Karsai, Holger M. Kienle, Jeff Kramer, Marin Litoiu, Sam Malek, Raffaela Mirandola, Hausi A. Müller, Sooyong Park, Mary Shaw, Matthias Tichy, Massimo Tivoli, Danny Weyns, Jon Whittle. "Software Engineering for Self-Adaptive Systems: A Research Roadmap." In *Software Engineering for Self-Adaptive Systems*, Editors B. H. C. Cheng, R. de Lemos, H. Giese, P. Inverardi, and J. Magee, Lecture Notes in Computer Science, Springer, 2009.

B1. Sam Malek, Nels Beckman, Marija Mikic-Rakic, and Nenad Medvidovic. "A Framework for Ensuring and Improving Dependability in Highly Distributed Systems." In *Architecting Dependable Systems III*, Editors R. de Lemos, C. Gacek, and A. Romanowski, Springer Verlag, October 2005.

Qomplx LLC, Exhibit 2023
Page 2023 - 66
IPR2026-00182, Microsoft Corp. v. Qomplx LLC

5.4 EDITED BOOKS AND JOURNALS

E2. Danny Weyns, Sam Malek, Jesper Andersson, and Bradley Schmerl. "Introduction to the Special Issue on the State of the Art in Engineering Self-Adaptive Software Systems." Journal of Systems and Software (JSS), Vol. 85, No. 12, pages 2675-2677, December 2012.

E1. Danny Weyns, Sam Malek, Rogerio de Lemos, and Jesper Andersson, eds. "Self-Organizing Architectures." *Lecture Notes in Computer Science (LNCS)*, Springer Verlag, Vol. 6090, 300 pages, September 2009. ISBN: 978-3-642-14411-0

5.5 DISSERTATION

- Sam Malek. "A User-Centric Approach for Improving a Distributed Software System's Deployment Architecture." PhD thesis. Computer Science Department, University of Southern California, 2007.

6 TEACHING

6.1 UNIVERSITY OF CALIFORNIA, IRVINE

- **INF 117 – Projects in Software System Design**
  Terms: Fall 2020, Fall 2021, Fall 2022, Fall 2024
  Upper-division undergraduate course for several majors within ICS

- **INF 124 / CompSci 137 – Internet Applications Engineering**
  Terms: Spring 2016, Spring 2017, Spring 2018, Spring 2019, Spring 2021, Spring 2022
  Upper-division undergraduate course for several majors within ICS

- **SWE 221 – Software Architecture**
  Terms: Fall 2016, Fall 2017, Fall 2018, Fall 2019, Fall 2022, Fall 2023, Spring 2025
  Graduate-level core course for Software Engineering M.S. and Ph.D. students

- **SWE 264P – Distributed Software Architecture**
  Terms: Winter 2020, Winter 2021, Winter 2022, Winter 2023, Winter 2024, Winter 2025, Winter 2026
  Graduate-level core course for Software Engineering MSWE student

- **INF 291S – Literature Survey in Software Engineering**
  Terms: Fall 2017, Spring 2018, Fall 2018, Spring 2019, Fall 2019, Spring 2020
  Graduate-level seminar course for Software Engineering M.S. and Ph.D. students

- **SWE 295 – Mobile Software Engineering**
  Terms: Winter 2023
  Graduate-level elective course for Software Engineering M.S. and Ph.D. students

- **SWE 295 – Software Accessibility**
  Terms: Fall 2024
  Graduate-level elective course for Software Engineering M.S. and Ph.D. students

Qomplx LLC, Exhibit 2023
Page 2023 - 67
IPR2026-00182, Microsoft Corp. v. Qomplx LLC

6.2 GEORGE MASON UNIVERSITY

- **SWE 699 / CS 795 / IT 821 – Software Architecture Research Issues**
  Terms taught: Spring 2010
  Graduate-level elective course for M.S. and Ph.D. level students

- **SWE 699 / CS 795 / IT 821 – Service-Oriented Architecture**
  Terms taught: Spring 2009, Fall 2011
  Graduate-level elective course for M.S. and Ph.D. level students

- **SWE 622 – Distributed Software Engineering**
  Terms taught: Fall 2007, Spring 2008, Fall 2008, Fall 2009, Spring 2010, Spring 2011, Fall 2011, Spring 2012, Fall 2012, Spring 2013, Fall 2013, Spring 2014
  Graduate-level core course for the M.S. degree in Software Engineering

- **SWE 443 – Software Architectures**
  Terms taught: Spring 2013
  Upper-division undergraduate course for BS CS and BS ACS majors

6.3 UNIVERSITY OF SOUTHERN CALIFORNIA

- **CS 589 – Software Engineering for Embedded Systems**
  Teaching Assistant, Fall 2003; Guest Lecturer, Fall 2004-2006

- **CS 377 – Introduction to Software Engineering**
  Guest Lecturer, Fall 2006

7 SUPERVISED STUDENTS AND RESEARCHERS

7.1 POSTDOCTORAL ASSOCIATES

ALUMNI

- Joshua Garcia
  July 2014 – June 2018
  First employment: Assistant Professor, University of California Irvine
- Hamid Bagheri
  September 2013 – August 2016
  First employment: Assistant Professor, University of Nebraska Lincoln
- Yonghee Shin
  August 2012 – May 2013
  First employment: Folio Investing

7.2 DOCTORAL DISSERTATION COMMITTEE CHAIR

CURRENT

- Syed Fatiul Huq
  Status: passed advancement in Summer 2024

Qomplx LLC, Exhibit 2023
Page 2023 - 68
IPR2026-00182, Microsoft Corp. v. Qomplx LLC

- Ziyao He
  Status: passed advancement in Summer 2025
- Moumita Asad
  Status: started in Fall 2023
- Congyu Luo
  Status: started in Fall 2023
- Yirui He
  Status: passed advancement in Fall 2025

ALUMNI

- Forough Mehralian
  Graduation date: July 2024
  Dissertation title: Automated Techniques for Improving the Accessibility of Android Applications for Screen Reader Users
  First employment: Apple Inc
- Abdulaziz Alshayban
  Graduation date: March 2023
  Dissertation title: Automated Detection and Repair of Text Accessibility Issues
  First employment: Assistant Professor, King Saud University
- Navid Salehnamadi
  Graduation date: December 2022
  Dissertation title: Automated Assistive-Service Driven Accessibility Testing for Mobile Applications
  First employment: Senior Machine Learning Engineer, Tesla
- Negar Ghorbani
  Graduation date: August 2022
  Dissertation title: Validation and Verification of Modular Constructs in Software Applications
  First employment: Research Scientist, Meta
- Jun-Wei Lin
  Graduation date: August 2021
  Dissertation title: Advancing Automated Software Testing Through Test Reuse
  First employment: Software Engineer, MGM Resort International
- Reyhaneh Jabbarvand
  Graduation date: June 2020
  Dissertation title: Advancing Energy Testing of Android Applications
  First employment: Assistant Professor, University of Illinois Urbana-Champaign
- Mahmoud Hammad
  Graduation date: August 2018
  Dissertation title: Self-Protection of Android Systems from Inter-Component Communication Attacks
  First employment: Assistant Professor, Jordan University of Science and Technology
- Alireza Sadeghi
  Graduation date: December 2017
  Dissertation title: Efficient Permission-Aware Analysis of Android Apps
  First employment: Google Inc.
- Nariman Mirzaei
  Graduation date: August 2016

Qomplx LLC, Exhibit 2023
Page 2023 - 69
IPR2026-00182, Microsoft Corp. v. Qomplx LLC

Dissertation title: Automated Input Generation Techniques for Testing Android Applications
First employment: Videology

- Ehsan Kouroshfar
  Graduation date: May 2016
  Dissertation title: An Empirical Study of the Interplay Between Architecture and Software Quality Using Evolutionary History of Software
  First employment: Appian Corporation
- Eric Yuan
  Graduation date: May 2016
  Dissertation title: Architecture-Based Self-Protecting Software Systems
  First employment: Aerospace Corporation
- Riyadh Mahmood
  Graduation date: May 2015
  Dissertation title: An Evolutionary Approach for System Testing of Android Applications
  First employment: Harris Corporation
- Naeem Esfahani
  Graduation date: August 2014
  Dissertation title: Management of Uncertainty in Self-Adaptive Software
  First employment: Google Inc.
- Ahmed Elkhodary
  Graduation date: December 2011
  Dissertation title: A Learning-Based Approach for Engineering Feature-Oriented Self-Adaptive Software Systems
  First employment: U.S. Securities and Exchange Commission

7.3 MASTERS DISSERTATION COMMITTEE CHAIR

CURRENT

- Rafed Muhammad Yasir
- Abdul Kalam Syed

ALUMNI

- Rafed Muhammad Yasir
  Graduation date: July 2025
  Dissertation title: Impact of Mislabeled Issues on Information Retrieval-based Bug Localization
- Shubhi Jain
  Graduation date: June 2025
  Dissertation title: Automated Detection of Web Application Navigation Barriers for Screen Reader Users
- Ziyao He
  Graduation date: June 2023
  Dissertation title: Enhancing Manual Accessibility Testing in Mobile Apps through Synergistic Integration of Assistive Technology and Record-and-Replay Techniques

- Pooja Naresh Bhatia
  Graduation date: June 2023
  Dissertation title: A Historical Review of Web Accessibility Using Wave
- Faraz Yazdani
  Graduation date: August 2020
  Dissertation title: Deep-GUI: Towards Platform-Independent UI Input Generation with Deep Reinforcement Learning
- Deshan A. Cooray
  Graduation date: August 2010
  Dissertation title: Resisting Reliability Degradation through Proactive Reconfiguration
  First employment: Verisign Inc.

7.4 Doctoral Advancement and Dissertation Committee Member

• Shenshen Han	Advisor: Kylie Peppler	UCI	2025
• Hang Du	Advisor: James Jones	UCI	2025
• Md Rakib Hossain	Advisor: Cristina Lopes	UCI	2024
• Jiawei Li	Advisor: Iftekhar Ahmed	UCI	2023
• Yuqi Huai	Advisor: Joshua Garcia	UCI	2022
• Yasaman Razeghi	Advisor: Sameer Singh	UCI	2022
• Andrew Truelove	Advisor: Iftekhar Ahmed	UCI	2021
• Jiri Gesi	Advisor: Iftekhar Ahmed	UCI	2021, 2023
• Arda Unal	Advisor: Joshua Garcia	UCI	2021, 2022
• Zhihao Yao	Advisor: Ardalan Amir Sani	UCI	2020
• Farnaz Behrang	Advisor: Alessandro Orso	Georgia Tech	2020
• Farima Farmahinifarahani	Advisor: Cristina Lopes	UCI	2019, 2022
• Sumaya Almanee	Advisor: Joshua Garcia	UCI	2019, 2022
• Seyed Mohammad Seyed Talebi	Advisor: Ardalan Amir Sani	UCI	2019
• Yingtong Liu	Advisor: Ardalan Amir Sani	UCI	2019
• Julian Lettner	Advisor: Michael Franz	UCI	2018
• Vaibhav Saini	Advisor: Cristina Lopes	UCI	2018
• Di Yang	Advisor: Cristina Lopes	UCI	2019
• Rohan Achar	Advisor: Cristina Lopes	UCI	2019, 2020
• Yang Feng	Advisor: James Jones	UCI	2019
• Alexios Voulimeneas	Advisor: Michael Franz	UCI	2018
• Gabriel Moreno	Advisor: David Garlan	CMU	2017
• Hsin-Chung Chen	Advisor: Pai Chou	UCI	2016
• Jing Guan	Advisor: Jeff Offutt	GMU	2015
• John D. Mcdowall	Advisor: Larry Kerschberg	GMU	2014
• Quyen L. Nguyen	Advisor: Arun Sood	GMU	2014

• Nan Li	Advisor: Jeff Offutt	GMU	2014
• Ahmed Abu Jbara	Advisor: Alexander Levis	GMU	2013
• Antti Evesti	Advisor: Jukka Riekki	U. of Oulu	2013
• Sander van der Burg	Advisor: Eelco Visser	Delft U.	2013
• Zhaohui Wang	Advisor: Angelos Stavrou	GMU	2012
• Julie Street, 2011	Advisor: Hassan Gomaa	GMU	2011
• Mohammad Abu-Matar	Advisor: Hassan Gomaa	GMU	2011

7.5 MASTERS DISSERTATION COMMITTEE MEMBER

• Leyu Lyu	Advisor: Andre van der Hoek	UCI	2024
• Yongbo Chen	Advisor: Joshua Garcia	UCI	2024
• Changnam Hong	Advisor: Joshua Garcia	UCI	2024
• Anmol Deshpande	Advisor: Andre van der Hoek	UCI	2024
• Canyang Shi	Advisor: Joshua Garcia	UCI	2022
• Aaron Matthews	Advisor: Joshua Garcia	UCI	2021
• Xiaochen Yu	Advisor: Cristina Lopes	UCI	2021
• Shrijith Venkatramana	Advisor: Cristina Lopes	UCI	2021
• Thomas Kwak	Advisor: Andre van der Hoek	UCI	2017
• Andrea Renika Souza	Advisor: Cristina Lopes	UCI	2016
• Xiang Shen	Advisor: Joao Sousa	GMU	2013
• Muhammad Faraz Rafi	Advisor: Alexander Levis	GMU	2010
• Koji Hashimoto	Advisor: Hassan Gomaa	GMU	2010

8 FORMAL PRESENTATIONS

P63. *Invited talk — Beyond Functional Bugs: How AI Can Help Us Test the Non-Functional Properties that Matter*, Future Advanced Testing Technology Workshop, Paris, France, September 2025.

P62. *Reca11: Automated Generation of Accessibility Test Reports from Recorded User Transcripts*, 47th IEEE/ACM International Conference on Software Engineering (ICSE 2025), Ottawa, Canada, April 2025.

P61. *Invited talk — Emerging Software Testing Techniques for More Accessible Software*, 34th ACM SIGSOFT International Symposium on Software Testing and Analysis (ISSTA 2025), Inclusive Software Session, Trondheim, Norway, June 2025.

P60. *Ma11y: A Mutation Framework for Web Accessibility Testing*, 33rd ACM SIGSOFT International Symposium on Software Testing and Analysis (ISSTA 2024), Vienna, Austria, September 2024.

P59. *Keynote — Beyond "alt text": Emerging Software Engineering Techniques for More Accessible Software*, 17th IEEE International Conference on Software Testing, Verification, and Validation (ICST 2024), Toronto, Canada, May 2024.

Qomplx LLC, Exhibit 2023
Page 2023 - 72
IPR2026-00182, Microsoft Corp. v. Qomplx LLC

P58. *Invited talk — Emerging Software Engineering Techniques for Stemming Software Accessibility Issues,* Monash University, Software Systems and Cybersecurity Seminars, June 2023.

P57. *Invited talk — Software Analysis and Testing Techniques for Mobile Applications*, Nippon Telegraph and Telephone, April 2022.

P56. *Invited talk — Test of Time Award: FUSION: a Framework for Engineering Self-Tuning Self-Adaptive Software Systems*, 27th ACM Joint European Software Engineering Conference and Symposium on the Foundations of Software Engineering (ESEC/FSE), Sacramento, CA, November 2020.

P55. *Invited talk — The Threat in Your Pocket: Trends, Challenges, and Solutions in Mobile Application Security*, ACM OC Chapter, Irvine, CA, May 2020.

P54. *Invited talk — Mining Architectural Information to Stem Technical Debt,* Google, Venice, CA, June 2019.

P53. *Invited talk — Mobile Application Security*. CPRI-ISR IoT Security Symposium, Irvine, CA, May 2019.

P52. *Invited talk — Testing and Analysis Techniques for Improving the Quality of Android Apps.* Google, Mountain View, CA, March 2019.

P51. *Keynote — The Threat in Your Pocket: Trends, Challenges, and Solutions in Mobile Application Security*. 25th Australasian Software Engineering Conference (ASWEC) and Australasian Software Week (ASW), November 2018.

P50. *Advancing Energy Testing of Android Apps.* Futurewei Academia Test Forum. Dallas, TX, September 2018.

P49. *Missteps in Framework Design: Consequences and Solutions.* Institute for Software Research Forum, UC Irvine, June 2018.

P48. *Mining Mobile App Markets for Prioritization of Security Assessment Effort.* International Workshop on App Market Analytics (WAMA 2017), Paderborn, Germany, September 2017.

P47. *Tools for Automated Detection and Assessment of Security Vulnerabilities in Mobile Applications.* Department of Homeland Security's Cyber Security Division R&D Showcase and Technical Workshop, Washington DC, July 2017.

P46. *Keynote — Android Security from a Software Architectural Perspective*. IEEE International Conference on Software Architecture (ICSA 2017), Gothenburg, Sweden, April 2017.

P45. *Energy-Aware Test-Suite Minimization for Android Apps.* International Symposium on Software Testing and Analysis (ISSTA 2016), Saarbrücken, Germany, July 2016.

P44. *Mobile App Security: Detection and Family Identification of the Malice in your Pocket*. Institute for Software Research Forum, UC Irvine, May 2016.

P43. *Detection and Family Identification of Android Malware.* Department of Homeland Security's Cyber Security Division R&D Showcase and Technical Workshop, Washington, DC, February 2016.

P42. *SIG-Droid: Automated System Input Generation for Android Applications.* 26th IEEE International Symposium on Software Reliability Engineering (ISSRE 2015), Gaithersburg, MD, November 2015.

P41. *Detection and Family Identification of Android Malware.* NII Shonan Meeting – Mobile App Store Analytics, Kanagawa, Japan, October 2015.

P40. *Automated Detection of Android Inter-Application Vulnerabilities*. DHS SWAMP/SQA PI meeting, Atlanta, May 2015.

Qomplx LLC, Exhibit 2023
Page 2023 - 73
IPR2026-00182, Microsoft Corp. v. Qomplx LLC

P39. *A Tool for Automated Detection of Inter-Application Security Vulnerabilities in Android*. National Security Agency, College Park, Maryland, March 2015.

P38. *Automated Analysis and Testing of Mobile Software.* University of California Irvine. Computer Science Department. March 2015.

P37. *Automated Analysis and Testing of Mobile Software.* University of Southern California. Computer Science Department. February 2015.

P36. *Automated Analysis and Testing of Mobile Software.* College of William and Mary. Computer Science Department. February 2015.

P35. *Automated Analysis and Testing of Mobile Software*. George Mason University. Computer Science Department. February 2015.

P34. *Invited Talk — Automated Detection and Mitigation of Inter-Application Security Vulnerabilities in Android*. 2nd International Workshop on Software Development Lifecycle for Mobile. Hong Kong, China, November 2014.

P33. *Automated Mining of Software Component Interactions for Self-Adaptation.* 9th International Symposium on Software Engineering for Adaptive and Self-Managing Systems (SEAMS 2014). Hyderabad, India, June 2014.

P32. *Keynote — Toward the Making of Software that Learns to Manage Itself.* 27th Brazilian Symposium on Software Engineering (SBES 2013), Brasilia, Brazil, October 2013.

P31. *Invited Speaker — Automated Security Testing of Mobile Applications*. FedMobileCamp hosted by NGA/InnoVision, Reston, VA, August 2013.

P30. *Invited Talk — A Framework for Improving a Distributed Software System's Deployment Architecture*. Delft University of Technology, Delft, Netherlands, June 2013.

P29. *Keynote — The Secret Sauce for Succeeding in your PhD Research and Beyond.* 35th International Conference on Software Engineering (ICSE 2013), Doctoral Symposium track, San Francisco, CA, May 2013.

P28. *Automated Security Testing and Analysis of Smartphone Applications.* National Security Agency, George Mason University, Fairfax, VA, August 2012

P27. *Automated Security Testing of Android Applications for the Military App Store*. DARPA Computer Science Study Panel, Arlington, VA, April 2012

P26. *Invited Talk — Guided Exploration of the Architectural Solution Space in the Face of Uncertainty*. Lockheed Martin Architects Workshop, Littleton, Colorado, August 2011

P25. *Taming Uncertainty in Self-Adaptive Software.* 8th joint meeting of the European Software Engineering Conference and ACM SIGSOFT Symposium on the Foundations of Software Engineering (ESEC/FSE 2011), Szeged, Hungary, September 2011

P24. *Invited Talk — Engineering Self-Adaptive Software Systems.* Virginia Polytechnic Institute and State University, Falls Church, VA, February 2011

P23. *Invited Talk — Engineering Self-Adaptive Software Systems*. Sharif University, Tehran, Iran, December 2010

P22. *FUSION: A Framework for Engineering Self-Tuning Self-Adaptive Software Systems.* 18th ACM SIGSOFT International Symposium on the Foundations of Software Engineering (FSE 2010), Santa Fe, NM, November 2010

P21. *Reliability Degradation through Proactive Reconfiguration.* 25th IEEE/ACM International Conference on Automated Software Engineering (ASE 2010), Antwerp, Belgium, September 2010

P20. *Utilizing Architectural Styles to Enhance Adaptation Support in Middleware Platforms.* 4th European Conference on Software Architectures (ECSA 2010), Copenhagen, Denmark, August 2010

P19. *Context-Driven Optimization of Mobile Service-Oriented Systems for Improving their Resilience.* IEEE International Workshop on Engineering Mobile Service-Oriented Systems (EMSOS 2010), Miami, FL, July 2010

P18. *Social Computing Networks: A New Paradigm for Engineering Pervasive Software Systems.* 32nd International Conference on Software Engineering (ICSE 2010), New Ideas and Emerging Results Track, Cape Town, South Africa, May 2010

P17. *Self-Architecting Software Systems (SASSY) from QoS-Annotated Activity Models.* International Workshop on Principles of Engineering Service Oriented Systems (PESOS 2009), Vancouver, Canada, May 2009

P16. *Component-Level Energy Consumption Estimation for Distributed Java-Based Software Systems.* International Symposium on Component Based Software Engineering (CBSE 2008), Karlsruhe, Germany, October 2008

P15. *Dealing with the Crosscutting Structure of Software Architectural Styles.* IEEE International Computer Software and Applications Conference (COMPSAC), Turku, Finland, July 2008

P14. *Architecture-Driven Software Mobility in Support of QoS Requirements*. International Workshop on Software Architectures and Mobility (SAM), Leipzig, Germany, May 2008

P13. *Effective Realization of Software Architectural Styles with Aspects.* Working IEEE/IFIP Conference on Software Architecture (WICSA 2008), Vancouver, BC, Canada, February 2008

P12. *A Framework for Estimating the Impact of a Distributed Software System's Architectural Style on its Energy Consumption*. Working IEEE/IFIP Conference on Software Architecture (WICSA 2008), Vancouver, BC, Canada, February 2008

P11. *Architecture-Driven Software Mobility in Support of QoS Requirements*. Dagstuhl Seminar 08031 on Software Engineering for Self-Adaptive Systems, Saarbrucken, Germany, January 2008

P10. *Reconceptualizing a Family of Heterogeneous Embedded Systems via Explicit Architectural Support*. International Conference on Software Engineering (ICSE 2007), Minneapolis, Minnesota, May 2007

P9. *A User-Centric Framework for Improving a Distributed Software System's Deployment Architecture.* Doctoral track of the Symposium on Foundations of Software Engineering (FSE 2006), Portland, Oregon, November 2006

P8. *Tailoring an Architectural Middleware Platform to a Heterogeneous Embedded Environment.* International Workshop on Software Engineering and Middleware (SEM 2006), Portland, Oregon, November 2006

P7. *A Decentralized Redeployment Algorithm for Improving the Availability of Distributed Systems*. International Conference on Component Deployment (CD 2005), Grenoble, France, November 2005

P6. *Improving Availability in Large, Distributed, Component-Based Systems via Redeployment.* International Conference on Component Deployment (CD 2005), Grenoble, France, November 2005

P5. *A User-Centric Approach for Improving a Distributed Software System's Deployment Architecture*. USC Center for Software Engineering Annual Research Review, Los Angeles, California, March 2005

Qomplx LLC, Exhibit 2023
Page 2023 - 75
IPR2026-00182, Microsoft Corp. v. Qomplx LLC

P4. *An Extensible Framework for Autonomic Analysis and Improvement of Distributed Deployment Architectures*. ACM SISGSOFT Workshop on Self-Managed Systems (WOSS 2004), Newport Beach, California, October 2004

P3. *A Tailorable Environment for Assessing the Quality of Deployment Architectures in Highly Distributed Settings*. Second International Conference on Component Deployment (CD 2004), Edinburgh, Scotland, May 2004

P2. *Improving Availability of Distributed Event-Based Systems via Run-Time Monitoring and Analysis.* Workshop on Architecting Dependable Systems (WADS 2004) held in conjunction with the International Conference on Software Engineering (ICSE 2004), Edinburgh, Scotland, May 2004

P1. *Improving System Availability in Distributed Environments.* USC Center for Software Engineering Annual Research Review, Los Angeles, CA, March 2004

9 PROFESSIONAL SERVICE

9.1 EDITORIAL BOARDS AND STEERING COMMITTEES

E7. Deputy Editor-in-Chief, Springer Journal of Automated Software Engineering (February 2024 – present)

E6. Associate Editor, ACM Transactions on Software Engineering and Methodology (March 2018 – March 2024)

E5. Associate Editor, ACM Transactions on Autonomous and Adaptive Systems (Nov 2017 – present)

E4. Associate Editor, Springer Computing Journal (February 2011 – February 2024)

E3. Member, Steering Committee, IEEE International Conference on Software Architecture (April 2019 – May 2022)

E2. Member, Steering Committee, International Symposium on Software Engineering for Adaptive and Self-Managing Systems (June 2015 – May 2019)

E1. Associate Editor, IEEE Transactions on Software Engineering (February 2014 – February 2018)

9.2 CONFERENCE AND WORKSHOP ORGANIZATION

O36. Area Track Chair, 49th International Conference on Software Engineering (ICSE 2027), Dublin, Ireland, May 2027.

O35. Co-Organizer, 1st International Workshop on User Interface and Experience for Software Engineering (UISE 2026), Rio De Janeiro, Brazil, April 2026.

O34. Co-Organizer, 8th International Workshop on Advances in Mobile App Analysis (A-Mobile 2024), Seoul, South Korea, November 2025.

O33. Co-Organizer, 7th International Workshop on Advances in Mobile App Analysis (A-Mobile 2024), Sacramento, CA, September 2024.

Qomplx LLC, Exhibit 2023
Page 2023 - 76
IPR2026-00182, Microsoft Corp. v. Qomplx LLC

O32. Co-Organizer, 6th International Workshop on Advances in Mobile App Analysis (A-Mobile 2023), Kirchberg, Luxembourg, September 2023

O31. Workshop Co-Chair, International Conference on Software Engineering (ICSE 2023), Melbourne, Australia, May 2023

O30. Co-Organizer, 5th International Workshop on Advances in Mobile App Analysis (A-Mobile 2022), Ann Arbor, Michigan, October 2022

O29. Sponsorship Co-Chair, International Conference on Software Engineering (ICSE 2022), Pittsburgh, PA, May 2022

O28. Co-Organizer, 4th International Workshop on Advances in Mobile App Analysis (A-Mobile 2021), Melbourne, Australia, November 2021

O27. Co-Organizer, 3rd International Workshop on Advances in Mobile App Analysis (A-Mobile 2020), Melbourne, Australia, September 2020

O26. Technical Briefings Co-Chair, 42nd International Conference on Software Engineering (ICSE 2020), Seoul, South Korea, May 2020

O25. Program Co-Chair, IEEE International Conference on Software Architecture (ICSA 2020), Salvador, Brazil, March 2020

O24. Co-Organizer, 2nd International Workshop on Advances in Mobile App Analysis (A-Mobile 2019), San Diego, CA, November 2019

O23. Co-Organizer, 2nd International Workshop on Establishing a Community-Wide Infrastructure for Architecture-Based Software Engineering (ECASE 2019), Montreal, Canada, May 2019

O22. Co-Organizer, International Workshop on Advances in Mobile App Analysis (A-Mobile 2018), Montpellier, France, September 2018

O21. Program Co-Chair, 5th IEEE/ACM International Conference on Mobile Software Engineering and Systems (MobileSoft 2018), Visions Track, Gothenburg, Sweden, May 2018

O20. Co-Organizer, NSF Sponsored Workshop on Infrastructures and Instruments for Software Architecture (REINFORCE), Urbana-Champaign, Illinois, October 2017

O19. Program Co-Chair, 11th IEEE International Conference on Self-Adaptive and Self-Organizing Systems (SASO 2017), Tucson, Arizona, September 2017

O18. Awards Chair, 39th International Conference on Software Engineering (ICSE 2016), Buenos Aires, Argentina, May 2017

O17. Program Co-Chair, International Workshop on Establishing the Community-Wide Infrastructure for Architecture-Based Software Engineering (ECASE 2017), Buenos Aires, Argentina, May 2017

O16. Program Chair, 11th International Symposium on Software Engineering for Adaptive and Self-Managing Systems (SEAMS 2016), Austin, Texas, May 2016

O15. Tutorial Co-Chair, 10th Joint Meeting of European Software Engineering Conference and the ACM SIGSOFT Symposium on the Foundations of Software Engineering (ESEC/FSE 2015), Bergamo, Italy, August 2015

O14. Proceedings Chair, 22nd International Symposium on the Foundations of Software Engineering (FSE 2014), Hong Kong, China, November 2014

O13. Tutorial Chair, 11th Working IEEE/IFIP Conference on Software Architecture (WICSA 2014), Sydney, Australia, April 2014

O12. Program Chair, 4th ACM SIGSOFT International Symposium on Architecting Critical Systems (ISARCS 2013), Vancouver, Canada, June 2013

O11. Internet Chair, 35th International Conference on Software Engineering (ICSE 2013), San Francisco, California, May 2013

O10. Publicity Chair, 6th IEEE International Conference on Self-Adaptive and Self-Organizing Systems (SASO 2012), Lyon, France, September 2012

O9. Workshop Chair, Joint 10th Working IEEE/IFIP Conference on Software Architecture (WICSA 2012) and 6th European Conference on Software Architecture (ECSA 2012), Helsinki, Finland, August 2012

O8. Publicity Chair, 5th International Conference on Self-Adaptive and Self-Organizing Systems (SASO 2011), Ann Arbor, Michigan, October 3-7 2011

O7. Posters Chair, 33rd International Conference on Software Engineering (ICSE 2011), Honolulu, Hawaii, May 21-28, 2011

O6. Co-editor, special issue of the Journal of Systems and Software on "State of the Art in Self-Adaptive Software Systems", tentative publication date of December 2011

O5. North America Regional Editor, International Journal of Software Architecture, 2010-2014

O4. Co-Organizer, ICAC International Workshop on Self-Organizing Architectures (SOAR 2010), Cambridge, UK, June 7, 2010

O3. Co-editor, "Self-Organizing Architectures", Lecture Notes in Computer Science, Springer Verlag, vol. 6090, 300 pages, September 2009, ISBN: 978-3-642-14411-0

O2. Co-Organizer, WICSA/ECSA International Workshop on Self-Organizing Architectures (SOAR 2009), Cambridge, UK, Sep 14, 2009

O1. GMU Software Engineering Seminar Series, 2007- 2015
http://cs.gmu.edu/~smalek/seminar.html

9.3 PROGRAM COMMITTEE AND PANEL MEMBERSHIP

S129. Program Committee Member, 1st International Workshop on Code Translation, Transformation, and Modernization (ReCode 2026), Rio De Janeiro, Brazil, April 2026.

S128. Program Committee Member, 23rd IEEE International Conference on Software Architecture (ICSA 2026), Netherlands, Amsterdam, June 2026.

S127. Program Committee Member, 40th IEEE/ACM International Conference on Automated Software Engineering (ASE 2025), Seoul, South Korea, November 2025.

S126. Program Committee Member, ACM International Conference on the Foundations of Software Engineering (FSE 2025), Trondheim, Norway, June 2025.

S125. Program Committee Member, 22nd IEEE International Conference on Software Architecture (ICSA 2025), Odense, Denmark, March 2025.

S124. Program Committee Member, 9th ACM/IEEE International Conference on Automated Software Engineering (ASE 2024), Sacramento, CA, November 2024.

S123. Program Committee Member, 21st IEEE International Conference on Software Architecture (ICSA 2024), Hyderabad, India, June 2024.

Qomplx LLC, Exhibit 2023
Page 2023 - 78
IPR2026-00182, Microsoft Corp. v. Qomplx LLC

S122. Program Committee Member, 46th International Conference on Software Engineering (ICSE 2024), Lisbon, Portugal, April 2024.

S121. Program Committee Member, 22nd ACM Joint European Software Engineering Conference and Symposium on the Foundations of Software Engineering (ESEC/FSE 2023), San Francisco, CA, November 2023.

S120. Program Committee Member, 38th IEEE/ACM International Conference on Automated Software Engineering (ASE 2023), Kirchberg, Luxembourg, September 2023.

S119. Program Committee Member, 10th International Conference on Mobile Software Engineering and Systems (MobileSoft 2023), Melbourne, Australia, May 2023

S118. Program Committee Member, 20th IEEE International Conference on Software Architecture (ICSA 2023), L'aquila, Italy, March 2023.

S117. Program Committee Member, 21st ACM Joint European Software Engineering Conference and Symposium on the Foundations of Software Engineering (ESEC/FSE 2022), Singapore, November 2022

S116. Panelist, National Science Foundation, Computing and Communication Foundations, November 2022.

S115. Program Committee Member, 37th IEEE/ACM International Conference on Automated Software Engineering (ASE 2022), Ann Arbor, Michigan, October 2022

S114. Program Committee Member, 44th International Conference on Software Engineering, Doctoral Symposium (ICSE-DS 2022), Pittsburgh, PA, May 2022

S113. Program Committee Member, 17th International Symposium on Software Engineering for Adaptive and Self-Managing Systems (SEAMS 2022), Pittsburgh, PA, May 2022

S112. Program Committee Member, 19th IEEE International Conference on Software Architecture (ICSA 2022), Honolulu, Hawaii, March 2022

S111. Program Committee Member, ACM Joint European Software Engineering Conference and Symposium on the Foundations of Software Engineering (ESEC/FSE 2021), Athens, Greece, August 2021

S110. Program Committee Member, International Conference on Software Engineering Journal First track (ICSE-JF 2021), , Madrid, Spain, May 2021

S109. Program Committee Member, 8th IEEE/ACM International Conference on Mobile Software Engineering and Systems (MOBILESOFT 2021), Madrid, Spain, May 2021

S108. Panelist, National Science Foundation, May 2021

S107. Program Committee Member, 4th International Workshop on User Interface Test Automation and Testing Techniques for Event-Based Software (INTUITESTBEDS 2021), Porto de Galinha, Brazil, April 2021

S106. Program Committee Member, 18th IEEE International Conference on Software Architecture (ICSA 2021), Stuttgart, Germany, March 2021

S105. Program Committee Member, Language and Tools for Next Generation Testing Workshop (LANGETI 2020), Sacramento, CA, November 2020

S104. Program Committee Member, 11th International Workshop on Automated Software Testing (A-Test 2020), Sacramento, CA, November 2020

S103. Program Committee Member, 15th European Conference on Software Architecture (ECSA 2020), L'Aquila, Italy, September 2020

S102. Editor-in-Chief ACM Transactions on Autonomous and Adaptive Systems Search Committee Member, September 2020

S101. Program Committee Member, 3rd International Conference on Science of Cyber Security (SciSec 2020), Shanghai, China, August 2020

S100. Program Committee Member, 42nd ACM/IEEE International Conference on Software Engineering (ICSE 2020), Seoul, South Korea, May 2020

S99. Program Committee Member, 3rd International Workshop on User Interface Test Automation and Testing Techniques for Event-Based Software (INTUITESTBEDS 2020), Porto, Portugal, March 2020

S98. Program Committee Member, 2nd International Workshop on Software Security from Design to Deployment (SEAD 2019), San Diego, CA, November 2019

S97. Program Committee Member, 14th European Conference on Software Architecture (ECSA 2019), Paris, France, September 2019

S96. Program Committee Member, 10th International Workshop on Automated Software Testing (A-Test 2019), Tallinn, Estonia, August 2019

S95. Program Committee Member, 2nd International Conference on Science of Cyber Security (SciSec 2019), Nanjing, China, August 2019

S94. Program Committee Member, 41st ACM/IEEE International Conference on Software Engineering (ICSE 2019), Montreal, Canada, May 2019

S93. Program Committee Member, 6th IEEE/ACM International Conference on Mobile Software Engineering and Systems (MOBILESOFT 2019), Montreal, Canada, May 2019

S92. Program Committee Member, 14th Symposium on Software Engineering for Adaptive and Self-Managing Systems (SEAMS 2019), Doctoral Track, Montreal, Canada, May 2019

S91. Program Committee Member, 1st International Workshop on Self-Protecting Systems (SPS 2019), Umea, Sweden, April 2019

S90. Program Committee Member, 2nd International Workshop on User Interface Test Automation and Testing Techniques for Event-Based Software (INTUITESTBEDS 2019), Xi'an, China, April 2019

S89. Program Committee Member, IEEE International Conference on Software Architecture (ICSA 2019), Hamburg, Germany, March 2019.

S88. Program Committee Member, 26th ACM Joint European Software Engineering Conference and Symposium on the Foundations of Software Engineering (ESEC/FSE 2018), Lake Buena Vista, Florida, November 2018

S87. Program Committee Member, 1st International Workshop on Architectural Knowledge for Self-Adaptive Systems (AKSAS 2018), Madrid, Spain, September 2018

S86. Program Committee Member, 12th Workshop on Distributed Software Development, Software Ecosystems and Systems-of-Systems (WDES 2018), Madrid, Spain, September 2018

S85. Program Committee Member, 12th IEEE International Conference on Adaptive and Self-Organizing Systems (SASO 2018), Trento, Italy, September 2018

Qomplx LLC, Exhibit 2023
Page 2023 - 80
IPR2026-00182, Microsoft Corp. v. Qomplx LLC

S84. Program Committee Member, 12th European Conference on Software Architecture (ECSA 2018), Madrid, Spain, September 2018

S83. Program Committee Member, 12th Workshop on Distributed Software Development, Software Ecosystems and Systems-of-Systems (WDES 2018), Madrid, Spain, September 2018

S82. Program Committee Member, 1st International Workshop on Architecture Knowledge for Self-Adaptive Systems (AKSAS 2018), Madrid, Spain, September 2018

S81. Program Committee Member, 4th International Workshop on User-Interface Test Automation and 8th International Workshop on Testing Techniques for Event-based Software (INTUITESTBEDS 2018), Amsterdam, Netherlands, July 2018

S80. Program Committee Member, 40th International Conference on Software Engineering (ICSE 2018), Demonstrations Track, Gothenburg, Sweden, May 2018

S79. Program Committee Member, 40th International Conference on Software Engineering (ICSE 2018), Software Engineering in Society Track, Gothenburg, Sweden, May 2018

S78. Program Committee Member, 5th IEEE/ACM International Conference on Mobile Software Engineering and Systems (MOBILESOFT 2018), Gothenburg, Sweden, May 2018

S77. Program Committee Member, 13th International Symposium on Software Engineering for Adaptive and Self-Managing Systems (SEAMS 2018), Gothenburg, Sweden, May 2018

S76. Program Committee Member, 1st International Workshop on Security Awareness from Design to Deployment (SEAD 2018), Gothenburg, Sweden, May 2018

S75. Program Committee Member, IEEE International Conference on Software Architecture (ICSA 2018), Seattle, USA, April 2018

S74. Program Committee Member, 11th European Conference on Software Architecture (ECSA 2017), Canterbury, UK, September 2017

S73. Program Committee Member, 2nd Workshop on Engineering Collective Adaptive Systems (eCAS 2017), Tucson, Arizona, September 2017

S72. Search Committee Member, Editor in Chief Search Committee for the ACM Transactions on Autonomous and Adaptive Systems, January 2017-June 2017

S71. Program Committee Member, 4th IEEE/ACM International Conference on Mobile Software Engineering and Systems (MOBILESOFT 2017), Buenos Aires, Argentina, May 2017

S70. Program Committee Member, 39th International Conference on Software Engineering (ICSE 2017), Buenos Aires, Argentina, May 2017

S69. Program Committee Member, Joint 5th International Workshop on Software Engineering for Systems-of-Systems and 11th Workshop on Distributed Software Development, Software Ecosystems and Systems-of-Systems (SESOS/WDES 2017), Buenos Aires, Argentina, May 2017

S68. Program Committee Member, 12th International Symposium on Software Engineering for Adaptive and Self-Managing Systems (SEAMS 2017), Buenos Aires, Argentina, May 2017

S67. Program Committee Member, International Conference on Software Architecture (ICSA 2017), Gothenburg, Sweden, April 2017

S66. Program Committee Member, International Workshop on App Market Analytics (WAMA 2016), Seattle, WA, November 2016

S65. NSF Panel Member, Computing and Communication Foundations, Arlington, VA, September 2016

S64. Program Committee Member, 10th International Conference on Self-Adaptive and Self-Organizing Systems (SASO 2016), Augsburg, Germany, September 2016

S63. Program Committee Member, 10th European Conference on Software Architecture (ECSA 2016), Istanbul, Turkey, September 2016

S62. Program Committee Member, 13th IEEE International Conference on Autonomic Computing (ICAC 2016), Wurzburg, Germany, July 2016

S61. Program Committee Member, 38th International Conference on Software Engineering (ICSE 2016), Workshop Proposals, Austin, Texas, May 2016

S60. Program Committee Member, IEEE/ACM International Conference on Mobile Software Engineering and Systems (MOBILESoft 2016), Doctoral Symposium, Austin, Texas, May 2016

S59. Program Committee Member, International Workshop on Bringing Architecture Design Thinking into Developers' Daily Activities (BRIDGE 2016), Austin, Texas, May 2016

S58. Program Committee Member, 4th International Workshop on Software Engineering for System-of-Systems (SESoS 2016), Austin, Texas, May 2016

S57. Program Committee Member, Symposium and Bootcamp on the Science of Security (HotSoS 2016), Pittsburgh, PA, April 2016

S56. Program Committee Member, 13th Working IEEE/IFIP Conference on Software Architecture (WICSA 2016) and 10th Federated Conference Series on Component-Based Software Engineering and Software Architecture (CompArch 2016), Venice, Italy, April 2016

S55. Program Committee Member, 3rd International Workshop on Software Development Lifecycle for Mobile (DeMobile 2015), Bergamo, Italy, August 2015

S54. Program Committee Member, 9th European Conference on Software Architecture (ECSA 2015), Dubrovnik, Croatia, September 2015

S53. Program Committee Member, 9th IEEE International Conference on Self-Adaptive and Self-Organizing Systems (SASO 2015), Cambridge, MA, September 2015

S52. Program Committee Member, 19th International Software Product Line Conference (SPLC 2015): New Directions in Systems and Software Product Line Engineering, Nashville, TN, July 2015

S51. Program Committee Member, Symposium and Bootcamp on the Science of Security (HotSoS 2015), Urbana-Champaign, IL, April 2015

S50. Program Committee Member, 37th International Conference on Software Engineering (ICSE 2015), Florence, Italy, May 2015

S49. NSF Panel Member, Computing and Communication Foundations, Arlington, VA, May 2015.

S48. Program Committee Member, 12th Working IEEE/IFIP Conference on Software Architecture (WICSA 2015), Montreal, Canada, May 2015

S47. Program Committee Member, 10th International Symposium on Software Engineering for Adaptive and Self-Managing Systems (SEAMS 2015), Florence, Italy, May 2015

S46. Program Committee Member, 9th International Workshop on Models at Runtime (MRT 2014), Valencia, Spain, September 2014

S45. Program Committee Member, 5th Testing Techniques and Experimentation Benchmarks for Event-Driven Software (TESTBEDS 2014), Vasteras, Sweden, September 2014

S44. Program Committee Member, 8th European Conference on Software Architecture (ECSA 2014), Vienna, Austria, August 2014

S43. Program Committee Member, IEEE 2nd International Workshop on Engineering Mobile Service Oriented Systems (EMSOS 2014), Anchorage, AL, June 2014

S42. Program Committee Member, 4th International Workshop on the Twin Peaks of Requirements and Architecture (TwinPeaks 2014), Hyderabad, India, June 2014

S41. Program Committee Member, 2nd International Workshop on the Engineering of Mobile-Enabled Systems (MOBS 2014), Hyderabad, India, June 2014

S40. Program Committee Member, 36th International Conference on Software Engineering (ICSE 2014), Hyderabad, India, June 2014

S39. Program committee Member, 9th International Symposium on Software Engineering for Adaptive and Self-Managing Systems (SEAMS 2014), Hyderabad, India, June 2014

S38. Program Committee Member, 11th Working IEEE/IFIP Conference on Software Architecture (WICSA 2014), Sydney, Australia, April 2014

S37. Program Committee Member, Workshop on Architecting Mobile-Enabled Systems (AMeS 2014), Sydney, Australia, April 2014

S36. Program Committee Member, Coordination Models, Languages and Applications track, 29th ACM Symposium on Applied Computing (SAC 2014), Gyeongju, Korea, March 2014

S35. NSF Panel Member, Secure and Trustworthy Computing, Arlington, VA, March 2014

S34. Panelist, American Association for the Advancement of Science (AAAS), Maine Technology Institute Development Loan Program, August 2013

S33. Program Committee Member, 7th IEEE International Conference on Self-Adaptive and Self-Organizing Systems (SASO 2013), Philadelphia, USA, September 2013

S32. Program Committee Member, International Workshop on Software Engineering for Systems-of-Systems (SESoS 2013), Montpellier, France, July 2013

S31. Program Committee Member, 7th European Conference on Software Architecture (ECSA 2013), Montpellier, France, July 2013

S30. Program Committee Member, 3rd International Workshop on the Twin Peaks of Requirements and Architecture (TwinPeaks 2013), Rio de Janeiro, Brazil, July 2013

S29. Program Committee Member, International Workshop on the Engineering of Mobile-Enabled Systems (MOBS 2013), San Francisco, CA, May 2013

S28. Program Committee Member, 4th International Workshop on Software Engineering for Sensor Network Applications (SESENA 2013), San Francisco, CA, May 2013

S27. Program Committee Member, 2nd International Workshop on the Twin Peaks of Requirements and Architecture (TwinPeaks 2013), San Francisco, CA, May 2013

S26. NSF Panel Member, Computing and Communication Foundations, Arlington, VA, January 2013

S25. Program Committee Member, Coordination Models, Languages and Applications track, 28th ACM Symposium on Applied Computing (SAC 2013), Coimbra, Portugal, January 2013

S24. Program Committee Member, 1st International Workshop on the Twin Peaks of Requirements and Architecture (TwinPeaks 2012), Chicago, Illinois, September 2012

S23. Program Committee Member, 1st International Workshop on Adaptive Service Ecosystems: Nature and Socially Inspired Solutions (ASENSIS 2012), Lyon, France, September 2012

S22. Program Committee Member, 20th International Symposium on the Foundations of Software Engineering (FSE 2012), New Ideas and Emerging Results Track, Research Triangle Park, North Carolina, November 2012

S21. Program Committee Member, 6th IEEE International Conference on Self-Adaptive and Self-Organizing Systems (SASO 2012), Lyon, France, September 2012

S20. Program Committee Member, Joint 10th Working IEEE/IFIP Conference on Software Architecture (WICSA 2012) and 6th European Conference on Software Architecture (ECSA 2012), Helsinki, Finland, August 2012

S19. Program Committee Member, Workshop on Architectures and Platforms for Knowledge Discovery from Data, Helsinki, Finland, August 2012

S18. Program Committee Member, 15th International ACM SIGSOFT Symposium on Component Based Software Engineering (CBSE 2012), Bertinoro, Italy, June 2012

S17. Program Committee Member, 2nd Workshop on Developing Tools as Plug-ins (TOPI 2012), Zurich, Switzerland, June 2012

S16. Program Committee Member, 34th International Conference on Software Engineering (ICSE 2012), New Ideas and Emerging Results Track, Zurich, Switzerland, June 2012

S15. Program Committee Member, 5th International Conference on Self-Adaptive and Self-Organizing Systems (SASO 2011), Ann Arbor, Michigan, October 3-7 2011

S14. Program Committee Member, 25th Brazilian Symposium on Software Engineering (SBES), São Paulo, Brazil, September 26-30 2011

S13. NSF Panel Member, Computer Networks and Systems core, Arlington, VA, March 2011

S12. Program Committee Member, 5th European Conference on Software Architecture (ECSA 2010), Essen, Germany, September 13-16 2011

S11. Program Committee Member, 33rd International Conference on Software Engineering (ICSE 2011), ACM Student Research Competition, Honolulu, Hawaii, May 21-28 2011

S10. Program Committee Member, 1st International Workshop on Engineering Mobile Service Oriented Systems (EMSOS), Miami, Florida, July 5 2010

S9. Program Committee Member, 4th European Conference on Software Architecture (ECSA 2010), Copenhagen, Denmark, August 23-26, 2010

S8. Program Committee Member, 33rd International Conference on Software Engineering (ICSE 2011), Technical/Research Track, Honolulu, Hawaii, May 21-28, 2011

S7. Program Committee Member, 3rd IEEE International Conference on Self-Adaptive and Self-Organizing Systems (SASO 2009), San Francisco, CA, September 14-18, 2009

S6. NSF Panel Member, Cyber Physical Systems, Arlington, VA, May 2009

S5. Program Committee Member, International Workshop on Software Architectures and Mobility (SAM 2009), Vancouver, Canada, May 2009

S4. Program Committee Member, Special Session on Software Architecture for Pervasive Systems (SAPS), 34th Euromicro Conference in Parma, Italy, September 3-5, 2008

S3. Program Committee Member, International Conference on Software Engineering Research and Practice (SERP'06), Las Vegas, Nevada, June 2006

S2. Program Committee Member, ISR Graduate Student Research Symposium, Irvine, California, June 2005

S1. Program Committee Member, 39th Hawaiian International Conference on System Sciences, Kauai, Hawaii, January 2006

9.4 REFEREE AND REVIEWER SERVICE

R22. Journal of Computer Security, 2014

R21. Elsevier Journal of Pervasive and Mobile Computing, 2014

R20. Journal of Computer Science and Technology, 2012

R19. ACM Transactions on Autonomous and Adaptive Systems, 2010, 2013, 2014, 2015, 2018, 2019, 2023

R18. International Journal of Software and Systems Modeling, 2010

R17. Journal of Empirical Software Engineering, 2010

R16. IEEE Computer, 2009

R15. Journal of Systems and Software, 2009, 2010, 2011, 2012

R14. ACM Transactions on Software Engineering and Methodology, 2008, 2011, 2012, 2013, 2017

R13. European Journal of Information Systems, 2008

R12. Enterprise Information Systems, 2008

R11. ACM Computing Surveys, 2007, 2008, 2009

R10. International Software Technology Journal, 2007, 2010, 2016

R9. IEEE Transactions on Software Engineering, 2007, 2008, 2009, 2010, 2011, 2012, 2013, 2014

R8. IET Software, 2007, 2008, 2009

R7. IEEE Software, 2006, 2007, 2008, 2018

R6. International Working Conference on Software Architecture, outside reviewer, 2007

R5. International Working Conference on Component Deployment, outside reviewer, 2005

R4. International Workshop on Software Engineering and Middleware, outside reviewer, 2005

R3. International Symposium on Component-based Software Engineering, outside reviewer, 2004 - 2006

R2. Twin Workshops on Architecting Dependable Systems (WADS), outside reviewer, May 2004

R1. ACM SISGSOFT Workshop on Self-Managed Systems (WOSS), outside reviewer, October 2004

10 UNIVERSITY SERVICE

U23. Software Engineering Hiring Committee, Informatics Department, 2023-2024

U22. Computing and Networking Policy Committee, Informatics Department, 2023-2025.

Qomplx LLC, Exhibit 2023
Page 2023 - 85
IPR2026-00182, Microsoft Corp. v. Qomplx LLC

U21. Director, Graduate Assistance in Areas of National Need Fellowship, UCI, 2021-2025

U20 Bren Chair Hiring Committee, Informatics Department, UCI, 2022-2025

U19 MSWE Steering/Admissions Committee, School of Information and Computer Sciences, 2021-2025

U18 Distinctions and Awards Committee, School of Information and Computer Sciences, 2021-2025

U17 Member, Lecturer Review Board, School of Information and Computer Sciences, UCI, 2020-2021

U15. Health Informatics Recruitment Committee, 2019-2020

U14. Member, Executive Committee, School of Information and Computer Sciences, UCI
2018 – 2019

U13. Software Engineering Steering Committee, School of Information and Computer Sciences, UCI
2018 – 2019 (Chair), 2019-2020 (Chair), 2024-2025

U12. Chair, Cybersecurity Recruitment Committee, School of Information and Computer Sciences, UCI
2017-2018

U11. Member, Software Engineering Recruitment Committee, Informatics Department, UCI
2017-2018

U10. Software Engineering Admissions Committee, Informatics Department, UCI
2017 – 2018 (Chair), 2022-2023 (Chair), 2023-2024 (Chair), 2024-2025

U9. Member, Software Engineering Steering Committee, School of Information and Computer Sciences, UCI
2017 – 2018

U8. Member, Executive Committee, School of Information and Computer Sciences, UCI
2017 – 2018

U7. Chair, Software Engineering Steering Committee, School of Information and Computer Sciences, UCI
2015 – 2017, 2019-2020

U6. Member, Graduate Admissions and Recruitment Day Committee, Informatics Department, UCI
2015 – 2017

U5. Member, Development and Fundraising Committee, Informatics Department, UCI
2015 – 2017

U4. Member, Faculty Recruitment, Computer Science Department, GMU
2013, 2015

U3. Member, PhD Admission, Computer Science Department, GMU
2012 – 2015

U2. Chair, Software Engineering Seminar Series, Computer Science Department, GMU
2008 – 2015

U1. Member, MS-SWE Admissions & Policy, Computer Science Department, GMU
2007 – 2015

Qomplx LLC, Exhibit 2023
Page 2023 - 86
IPR2026-00182, Microsoft Corp. v. Qomplx LLC

11 PROFESSIONAL ASSOCIATIONS

- Association for Computing Machinery (ACM)
- ACM Special Interest Group on Software Engineering (SIGSOFT)
- Institute of Electrical and Electronics Engineers (IEEE)

12 PATENTS AND PATENT APPLICATIONS

- Application number: 61782323
  Title: Runtime Learning System for Enabling Consistent and Timely Runtime Component Adaptation
  Filing date: March 14, 2013
  Inventors: Kyle R. Canavera, Naeem Esfahani, and Sam Malek
- Application number: 63178708
  Title: Automated Assistive-Technology Driven Accessibility Testing Environments
  Filing date: April 23, 2021
  Inventors: Navid Salehnamadi and Sam Malek

13 LITIGATION CONSULTING

L101. Skybell Technologies, Inc. v. Alarm.com, Inc.
Retaining Party: Alarm.com, Inc.
Venue: Eastern District of Virginia, Alexandria Division
Case No.: 1:25-cv-01105-RDA-WBP
Counsel: Cravath, Swaine & Moore LLP
Nature of suit: Intellectual Property – Trade Secret
April 2026 – present

L100. Amadeus North America, Inc, Amadeus IT Group, SA v. Optym, Inc. f/k/a Innovative Scheduling, LLC, Ravindra K. Ahuja, Pranav Gupta, and Renzo Vaccari
Retaining Party: Amadeus North America, Inc, Amadeus IT Group, SA
Venue: Business Court of Texas First Division
Case No.: 26-BC01B-0004
Counsel: Troutman Pepper Locke
Nature of suit: Intellectual Property – Trade Secret
March 2026 – present

L99. Microsoft Corporation v. Qomplx LLC
Retaining Party: Qomplx LLC
Venue: USPTO Patent Trial and Appeal Board
Case No.: IPR2026-00184; IPR2026-00183
Counsel: Irell & Manella LLP
Nature of suit: Intellectual Property – Patent
March 2026 – present

L98. QPrivacy USA LLC v. Cisco Systems, Inc.
Retaining Party: QPrivacy USA LLC
Venue: Eastern District of Texas, Marshall Division
Case No.: 2:24-cv-855-RWS-RSP
Counsel: Cherian Harkins Dunham LLP

Nature of suit: Intellectual Property – Patent
February 2026 – present

L97. Ex Parte Reexamination Request
Retaining Party: Walmart Inc.
Venue: U.S. Patent and Trademark Office
Counsel: Jackson Walker LLP
Nature of suit: Intellectual Property – Patent
March 2026 – present

L96. Walmart, Inc. v. Q Technologies, Inc., Marcus Allen Thomas
Retaining Party: Walmart Inc.
Venue: USPTO Patent Trial and Appeal Board
Case No.: TBD
Counsel: Alavi & Anaipakos PLLC
Nature of suit: Intellectual Property – Patent
February 2026 – present

L95. OnePass Data Technology LLC v. Verizon Communications Inc. and Cellco Partnership d/b/a Verizon Wireless; AT&T Mobility LLC and AT&T Services, Inc.
Retaining Party: OnePass Data Technology
Venue: District of Delaware
Case No.: 25-cv-01112-JCG; 25-cv-01111-JCG
Counsel: Ellenoff Grossman & Schole LLP
Nature of suit: Intellectual Property – Patent
February 2026 – present

L94. Ex Parte Reexamination Request
Retaining Party: Walmart Apollo, LLC
Venue: U.S. Patent and Trademark Office
Counsel: Fitch, Even, Tabin & Flanner LLP
Nature of suit: Intellectual Property – Patent
November 2025 – present

L93. RightQuestion, LLC v. T-Mobile USA, Inc. and T-Mobile US, Inc.
Retaining Party: RightQuestion, LLC
Venue: Eastern District of Texas
Case No.: 2:25-cv-00978-JRG
Counsel: Kramer Alberti Lim & Tonkovich LLP
Nature of suit: Intellectual Property – Patent
November 2025 – present

L92. Security First Innovations, LLC v. International Business Machines Corporation
Retaining Party: Security First Innovations
Venue: Eastern District of Virginia, Alexandria Division; USPTO
Case No.: 1:25-cv-00514; IPR2025-01201; IPR2025-01200
Counsel: Sullivan & Cromwell LLP
Nature of suit: Intellectual Property – Patent
September 2025 – present

L91. VinLogx LLC v. Accu-Trade LLC
Retaining Party: VinLogx LLC
Venue: Court of Chancery of the State of Delaware
Case No.: 2024-1236-MTZ

Counsel: Gordon Rees Scully Mansukhani, LLP
Nature of suit: Intellectual Property – Trade Secret
September 2025 – present

L90. System Soft Technologies LLC v. Resource Acquisition & Management Services Inc.
Retaining Party: Resource Acquisition & Management Services Inc.
Venue: Circuit Court of the Thirteenth Judicial Circuit, Hillsborough County, Florida
Case No.: 24-CA-010290
Counsel: Rocke, McLean & Sbar, P.A.
Nature of suit: Breach of Contract
August 2025 – November 2025

L89. Sholem Weisner v. Google LLC and Shmuel Nemanov
Retaining Party: Sholem Weisner
Venue: Southern District of New York
Case No.: 23-civ-8186 (AKH); 20-civ-2862 (AKH)
Counsel: Valhalla Legal, PLLC
Nature of suit: Intellectual Property – Patent
August 2025 – August 2025

L88. WAPP Tech Limited Partnership and WAPP Tech Corp. v. Apple Inc., Capital One, N.A., Capital One Services, LLC, Frost Bank, and Cullen/Frost Bankers
Retaining Party: Wapp Tech Limited Partnership and WAPP Tech Corp.
Venue: Eastern District of Texas
Case No.: 4:25-cv-00230
Counsel: Heim, Payne, & Chorush, LLP
Nature of suit: Intellectual Property – Patent
Deposition testimony on March 9, 2026
June 2025 – present

L87. FlexShopper, Inc. v. Upbound Group, Inc., Acima Holdings, LLC (d/b/a Acima Leasing), and Acima Digital, LLC (d/b/a Acima Leasing)
Retaining Party: Upbound Group, Inc., Acima Holdings, LLC, and Acima Digital, LLC
Venue: Eastern District of Texas
Case No.: 2:24-CV-00795-JRG (Lead); 2:24-CV-00794-JRG (Member)
Counsel: Sullivan & Cromwell LLP
Nature of suit: Intellectual Property – Patent
May 2025 – Dec 2025

L86. VirtaMove, Corp. v. International Business Machines Corp
Retaining Party: VirtaMove, Corp.
Venue: Eastern District of Texas, Western District of Texas
Case No.: 2:24-cv-64 (E.D. Tex.)
Counsel: Russ, August & Kabat
Nature of suit: Intellectual Property – Patent
Deposition testimony on July 18, 2025
April 2025 – August 2025

L85. Warner Records, Inc., et al. v. Altice USA, Inc., et al.
Retaining Party: Warner Music Group, Sony Music and Entertainment, Sony Music Publishing
Venue: Eastern District of Texas
Case No.: 2:23-cv-576-JRG-RSP
Counsel: Oppenheim & Zebrak, LLP
Nature of suit: Intellectual Property – Copyright

Deposition testimony on June 3, 2025
January 2025 – present

L84. Quartz Auto Technologies, LLC v. Lyft, Inc.
Retaining Party: Quartz Auto Technologies, LLC
Venue: Western District of Texas
Case No.: 1-20-CV-00719-ADA
Counsel: Irell & Manella LLP
Nature of suit: Intellectual Property – Patent
Deposition testimony on July 22, 2025
Trail testimony on February 27, 2026, and March 2, 2026
January 2025 – March 2026

L83. Dr. Edwin A. Hernandez, et al. v. Stingray Group Inc., et al.
Retaining Party: Stingray Group Inc.
Venue: Southern District of Florida
Case No.: 1:24-cv-21226-RAR
Counsel: Alavi & Anaipakos PLLC
Nature of suit: Intellectual Property – Patent
Deposition testimony on October 13, 2025
January 2025 – present

L82. Proxense, LLC v. Apple, Inc.
Retaining Party: Proxense, LLC.
Venue: Western District of Texas
Case No.: 6:24-cv-00143
Counsel: Susman Godfrey LLP; Hecht Partners LLP
Nature of suit: Intellectual Property – Patent
January 2025 – July 2025

L81. OpenAI, Inc. v. Open Artificial Intelligence, et al.
Retaining Party: Open Artificial Intelligence, et al.
Venue: Northern District of California
Case No.: 23-cv-03918-YGR
Counsel: Willenken LLP
Nature of suit: Intellectual Property – Trademark
Deposition testimony on March 12, 2025
January 2025 – July 2025

L80. Trama et al. v. RELX PLC et al.
Retaining Party: Trama et al. on behalf of class
Venue: Central District of California
Case No.: 2:24-cv-03174-DSF-E
Counsel: Susman Godfrey LLP
Nature of suit: Class Action
November 2024 – April 2025

L79. IN RE GEICO Customer Data Breach Litigation
Retaining party: GEICO
Venue: Eastern District of New York
Case No.: 1:21-cv-02210-KAM-SJB
Counsel: Rivkin Radler
Nature of suit: Class Action

Deposition testimony on January 16, 2026
October 2024 – present

L78. Keyless Licensing, LLC v. Samsung Electronics America, Inc. et al.
Retaining party: Keyless Licensing, LLC
Venue: Eastern District of Texas, Marshall Division
Case No.: 2:24-cv-00464-JRG
Counsel: Kramer Alberti Lim & Tonkovich LLP
Nature of suit: Intellectual Property – Patent
October 2024 – present

L77. Entri LLC v. GoDaddy.com LLC
Retaining party: Entri LLC
Venue: Eastern District of Virginia, Alexandria Division
Case No.: 1:24-cv-0069-AJT-WEF
Counsel: McGuireWoods LLP
Nature of suit: Antitrust; Breach of Contract; Computer Fraud and Abuse
Deposition testimony on February 7, 2025
September 2024 – February 2025

L76. Roku Inc v. VideoLabs Inc
Retaining party: VideoLabs Inc.
Venue: USPTO Patent Trial and Appeal Board
Case No.: IPR2024-01023; IPR2024-01024; IPR2024-01025; IPR2024-01026
Counsel: Bunsow De Morry LLP
Nature of suit: Intellectual Property – Patent
August 2024 – December 2024

L75. RightQuestion, LLC v. Verizon Business Network Services LLC et al.; AT&T Corporation, et al.
Retaining party: Right Question, LLC
Venue: Eastern District of Texas, Marshall Division
Case No.: 2:24-cv-00091-JRG; 2:24-cv-00094-JRG
Counsel: Kramer Alberti Lim & Tonkovich LLP
Nature of suit: Intellectual Property – Patent
Deposition testimony on July 7-8, 2025
June 2024 – August 2025

L74. People v. David Hott
Retaining party: People
Venue: Superior Court of California, County of San Diego
Case No.: SCD291916
Counsel: San Diego County District Attorney
Nature of suit: Criminal
May 2024 – July 2024

L73. Hyper Hippo Entertainment Ltd. v. Redcell Games General Partnership et al.
Retaining party: Hyper Hippo Entertainment Ltd.
Venue: Supreme Court of British Columbia, Vancouver Registry
Case No.: S217364
Counsel: Lawson Lundell LLP
Nature of suit: Intellectual Property – Trade Secret
May 2024 – present

L72. 303 Software, Inc. v. Find Solace, Inc.
Retaining party: Find Solace, Inc.
Venue: District Court of Colorado, Denver
Case No.: 2023CV30245
Counsel: Jason Kelly PLLC
Nature of suit: Breach of Contract, Fraud
April 2024 – September 2024

L71. Visa Inc. v. Cortex MCP, Inc.
Retaining party: Cortex MCP, Inc.
Venue: USPTO Patent Trial and Appeal Board
Case No.: IPR2024-00486
Counsel: Armond Wilson LLP
Nature of suit: Intellectual Property – Patent
Deposition testimony on December 12, 2024
March 2024 – present

L70. WAPP Tech Limited Partnership and WAPP Tech Corp v. JP Morgan Chase Bank, N.A.
Retaining party: WAPP Tech Limited Partnership, et al.
Venue: Easter District of Texas, Sherman Division
Case No.: 4:23-cv-1137
Counsel: Heim, Payne & Chorush, LLP
Nature of suit: Intellectual Property – Patent
January 2024 – December 2024

L69. BMG Rights Management (US), LLC, UMG Recordings, Inc, Capital Records, LLC, Concord Music Group, Inc., and Concord Bicycle Assets, LLC v. Altice USA, Inc, and CSC Holdings, LLC
Retaining party: BMG Rights Management (US), LLC, et al.
Venue: Eastern District of Texas, Marshall Division
Case No.: 2:22-CV-471-JRG
Counsel: Steptoe LLP
Nature of suit: Intellectual Property – Copyright
January 2024 – June 2024

L68. Immersion Corporation v. Valve Corporation
Retaining party: Valve Corporation
Venue: Western District of Washington
Case No.: 2:23-CV-00712
Counsel: Kwun Bhansali Lazarus LLP
Nature of suit: Intellectual Property – Patent
December 2023 – present

L67. Metarail, Inc. v. Google LLC
Retaining party: Metarail, Inc
Venue: District of Delaware
Case No.: 23-1116-GBW
Counsel: Bunsow De Mory LLP
Nature of suit: Intellectual Property – Patent
December 2023 – present

L66. David Irvin et al. v. Cabeela's LLC and BPS Direct LLC
Retaining party: David Irvin et al.
Venue: Eastern District of Pennsylvania

Case No.: 2:23-CV-04008
Counsel: Bursor & Fisher, P.A.
Nature of suit: Class Action
December 2023 – January 2024

L65. Benjamin Strusowski et al. v. The Nemours Foundation
Retaining party: Strusowski
Venue: Eastern District of Pennsylvania
Case No.: 2:23-CV-00537
Counsel: Bursor & Fisher, P.A.
Nature of suit: Class Action
December 2023 – March 2024

L64. Anonymous Media Research Holdings, LLC v. Samsung Electronics Co., Ltd., Samsung Electronics America, Inc.
Retaining party: Anonymous Media Research Holdings, LLC
Venue: Eastern District of Texas, Marshall Division
Case No.: 2:23-CV-439
Counsel: Ahmad, Zavitsanos & Mensing, PLLC
Nature of suit: Intellectual Property – Patent
Deposition testimony on May 23, 2025
Trial testimony on September 23, 2025
November 2023 – September 2025

L63. Anonymous Media Research Holdings, LLC v. Roku, Inc.
Retaining party: Anonymous Media Research Holdings, LLC
Venue: Western District of Texas, Austin Division
Case No.: 1:23-cv-01143
Counsel: Ahmad, Zavitsanos & Mensing, PLLC
Nature of suit: Intellectual Property – Patent
November 2023 – present

L62. Kytch, Inc. v. Jonathan Tyler Gamble, TFGroup, LLC, and Taylor Commercial Foodservice, LLC DBA Taylor Company
Retaining party: Kytch, Inc.
Venue: Superior Court of the State of California, The County of Alameda
Case No.: RG21099155
Counsel: Meier Watkins Phillips Pusch LLP; Irell & Manella
Nature of suit: Intellectual Property –Trade Secret
September 2023 – March 2024

L61. Emerging Automotive LLC v. Kia Corporation et al.; Toyota Motor North America Inc. et al.
Retaining party: Emerging Automotive LLC
Venue: Eastern District of Texas, Marshall Division; USPTO Patent Trial and Appeal Board
Case No.: 2:23-CV-00437; IPR2024-01167; IPR2024-00785; IPR2024-00981; IPR2024-01167; 2:23-CV-00434; IPR2024-01167; IPR2024-00785; IPR2024-00786; IPR2024-00814; IPR2024-00981; IPR2024-01167
Counsel: Bunsow De Morry LLP
Nature of suit: Intellectual Property – Patent
Deposition testimony on March 31, 2025; April 2, 2025; April 7, 2025; April 11, 2025; June 25, 2025
September 2023 – present

L60. Beijing Meishe Network Technology Co., Ltd. v. TikTok Inc., TikTok Pte. Ltd., ByteDance Ltd. and ByteDance Inc.
Retaining party: Beijing Meishe Network Technology Co. Ltd.
Venue: Western District of Texas, Waco Division
Case No.: 6:21-CV-00504-ADA-DTG
Counsel: Cherian LLP
Nature of suit: Intellectual Property – Trade Secret
Deposition testimony on June 30, 2025
September 2023 – September 2025

L59. Grey Wall Software LLC and Veoci Inc. v. Aerosimple LLC, Visweswara Rao Viswanadha a/k/a Visweswara Viswanadha Rao a/k/a Vishu Rao
Retaining Party: Aerosimple LLC and Vishu Rao
Venue: District of Connecticut
Case No.: 3:22-cv-00203-VLB
Counsel: Halloran & Sage LLP
Nature of suit: Intellectual Property –Trade Secret
June 2023 – present

L58. RoadSync, Inc. v. Relay Payments, Inc. Spener Barkoff, and James Ryan Droege
Retaining party: RoadSync, Inc.
Venue: Northern District of Georgia, Atlanta Division
Case No.: 1:21-cv-03420-MLB
Counsel: Councill, Gunnemann & Chally, LLC
Nature of suit: Intellectual Property –Trade Secret
Deposition testimony on February 16, 2024
June 2023 – present

L57. Todd Wooten et al. v. Ron Donaire, Jeff Pescatello, John Williams, and Delplaya Media; Delplaya Media Inc. v. Todd Wooten, Maureen Wooten, and VRTCAL Markets
Retaining party: Todd Wooten
Venue: Superior Court of the State of California, County of Santa Barbara
Case No.: 22CV01147
Counsel: Foley Bezek Behle & Curtis, LLP
Nature of suit: Intellectual Property –Trade Secret
June 2023 – March 2024

L56. Attentive Mobile, Inc. v. 317 Labs, Inc. d/b/a Emotive; Stodge Inc. d/b/a Postscript
Retaining party: Attentive Mobile, Inc.
Venue: District of Delaware
Case No.: 1:22-cv-01163-CJB; 1:23-cv-087-CJB
Counsel: King and Spalding
Nature of suit: Intellectual Property – Patent
May 2023 – July 2024

L55. Teresa E. Mendez Villegas, et al. v. Duarte Nursery, Inc.
Retaining party: Duarte Nursery, Inc.
Venue: Superior Court of California, County of Stanislaus
Case No.: 2014212
Counsel: Brunn and Flynn
Nature of suit: Class Action
April 2023 – July 2023

L54. Alarm.com v. Vivint, Inc.
Retaining Party: Alarm.com
Venue: Eastern District of Texas; and American Arbitration Association
Case No.: 2:23-cv-00004-JRG-RSP; AAA No. 01-22-0004-5525
Counsel: Cravath, Swaine & Moore LLP
Nature of suit: Intellectual Property – Patent
March 2023 – January 2024

L53. Matter of Position Mobile Ltd SEZC
Retaining Party: Technology Investment Consortium, LLC
Venue: Grand Court of the Cayman Islands
Case No.: FSD 79 OF 2022 (DDJ)
Counsel: Dinner Martin Attorneys t/a Dentons
Nature of suit: Breach of Contract; Intellectual Property – Trade Secret
Trial testimony on November 3, 2025
February 2023 – November 2025

L52. Vector Flow, Inc. v. HID Global Corp.
Retaining Party: HID Global Corp.
Venue: USPTO Patent Trial and Appeal Board
Case No.: IPR2023-00353
Counsel: Morgan, Lewis & Bockius LLP
Nature of suit: Intellectual Property – Patent
February 2023 – July 2023

L51. Wildseed Mobile LLC v. Google LLC et al.
Retaining party: Wildseed Mobile LLC
Venue: Norther District of California; USPTO Patent Trial and Appeal Board
Case No.: 3:22-cv-04928
Inter Partes Review No.: IPR2023-00247; IPR2023-00248
Counsel: Kramer Day Alberti Lim Tonkovich & Belloli LLP
Nature of suit: Intellectual Property – Patent
Deposition testimony on October 31, 2023, and November 2, 2023
January 2023 – April 2024

L50. Datanet LLC v. Dropbox Inc.
Retaining party: Datanet LLC
Venue: Western District of Texas
Case No.: 6:22-cv-01142-OLG
Counsel: Messner Reeves LLP
Nature of suit: Intellectual Property – Patent
December 2022 – present

L49. Datanet LLC v. Microsoft Corporation
Retaining party: Datanet LLC
Venue: Western District of Washington
Case No.: 2:22-cv-01545-TL
Counsel: Messner Reeves LLP
Nature of suit: Intellectual Property – Patent
December 2022 – present

L48. Austin Recht et al. v. TikTok Inc. (f/k/a Musical.ly, Inc.); ByteDance Inc.; Beijing Douyin Information Service Co. Ltd. a/k/a ByteDance Technology Co. Ltd.; and Douyin Ltd. a/k/a ByteDance Ltd.

Retaining party: Austin Recht et al.
Venue: Central District of California
Case No.: 2:22-cv-8613
Counsel: Baron and Budd, P.C.
Nature of suit: Class Action
December 2022 – November 2025

L47. The Receivership Estate of AudienceScience Inc. et al v. Google LLC et al.
Retaining party: The Receivership Estate of AudienceScience et al
Venue: Northern District of California
Case No.: 5:22-cv-04756-EJD
Counsel: Kramer Day Alberti Lim Tonkovich & Belloli LLP
Nature of suit: Intellectual Property – Patent
October 2022 – May 2024

L46. Dairy, LLC v. Milk Moovement, Inc.
Retaining party: Dairy, LLC
Venue: Eastern District of California
Case No.: 2:21-cv-02233-WBS-AC
Counsel: Willkie Farr & Gallagher LLP
Nature of suit: Intellectual Property – Trade Secret
October 2022 – January 2024

L45. Webroot Inc. and Open Text Inc. v. Forcepoint LLC; AO Kaspersky Lab; Crowdstrike Inc. and Crowdstrike Holdings Inc.; Sophos Ltd; and Trend Micro Inc.
Retaining party: Webroot, Inc. and Open Text, Inc.
Venue: Western District of Texas, Waco Division; USPTO Patent Trial and Appeal Board
Case No.: 22-cv- 00342, 22-cv-00243; No. 22-cv-00241; 22-cv-00240; 22-cv-00239
Counsel: King & Spalding; Sprinkle IP Law Group
Nature of suit: Intellectual Property – Patent
Deposition testimony on December 1, 2022
October 2022 – March 2024

L44. Ascension Data & Analytics LLC v. Pairprep, Inc. et al.
Retaining party: Pairprep, Inc.
Venue: American Arbitration Association
Case No.: 01-20-0019-3241
Counsel: Kwun Bhansali Lazarus LLP
Nature of suit: Intellectual Property – Trade Secret
Deposition testimony on October 27, 2022
Arbitration testimony on December 7, 2022
July 2022 – December 2022

L43. GoTV Streaming LLC v. Netflix
Retaining party: GoTV Streaming LLC
Venue: Central District of California
Case No.: 2-22-CV-07556
Counsel: Alavi & Anaipakos PPLC
Nature of suit: Intellectual Property – Patent
Deposition testimony on July 6, 2023
Trial testimony on October 18, 2023
June 2022 – October 2023

L42. Broadband iTV, Inc. v. Comcast Corporation; Comcast Cable Communications, LLC; NBCUniversal Media, LLC; Charter Communications, Inc., Charter Communications Operating, LLC, Charter Communications Holding Company, LLC; Spectrum Management Holding Company, LLC; Altice USA, Inc.; CSC Holding, LLC; Cablevision Systems Corp
Retaining party: Broadband iTV
Venue: International Trade Commission
Case No.: 337-TA-1315
Counsel: Kramer Day Alberti Lim Tonkovich & Belloli LLP
Nature of suit: Intellectual Property – Patent
June 2022 – October 2022

L41. Palmetto Solar, LLC v. Dvinci Energy, Inc. and Walid Halty
Retaining party: Dvinci Energy, Inc. and Walid Halty
Venue: Court of Chancery of the State of Delaware
Case No.: Confidential Filing
Counsel: Ray and Counsel, P.C.; The Williams Law Firm, P.A.
Nature of suit: Intellectual Property – Trade Secret
April 2022 – May 2022

L40. Daedalus Blue, LLC v. Microsoft Corporation
Retaining party: Daedalus Blue, LLC
Venue: Western District of Texas, Waco Division
Case No.: 6:20-CV-01152-ADA
Counsel: Bunsow De Mory LLP
Nature of suit: Intellectual Property – Patent
January 2022 – October 2022

L39. Morton v. Henry County 911 Emergency Communications, Harris Systems USA, et al.
Retaining party: Harris Systems USA
Venue: Circuit Court of Henry County, Missouri
Case No.: 19CA-CC00256
Counsel: Patton & Ryan LLC
Nature of suit: Personal Injury
Deposition testimony on October 21, 2021
October 2021 – November 2021

L38. Wapp Tech Limited Partnership and Wapp Tech Corp. v. Bank of America, N.A.; and Wells Fargo Bank, N.A.
Retaining party: Wapp Tech Limited Partnership and Wapp Tech Corp
Venue: Eastern District of Texas, Sherman Division
Case No.: 4:21-cv-00670-ALM; 4:21-cv-00671-ALM
Counsel: Heim Payne & Chorush, LLP; Ahmad, Zavitsanos & Mensing PC
Nature of suit: Intellectual Property – Patent
August 2021 – November 2022

L37. Daedalus Blue, LLC v. MicroStrategy Incorporated
Retaining party: Daedalus Blue, LLC
Venue: Eastern District of Virginia, Norfolk Division
Case No.: 20-cv-00551-RCY-RJK
Counsel: Bunsow De Mory LLP
Nature of suit: Intellectual Property – Patent

Deposition testimony on September 1 and 2, 2022
July 2021 – January 2024

L36. Scorpcast, LLC dba HaulStars v. MG Freesites Ltd
Retaining party: Scorpcast, LLC dba HaulStars
Venue: Eastern District of Texas, Marshall Division
Case No.: 2:20-CV-00193-JRG-RSP
Counsel: Williams Simons & Landis PLLC
Nature of suit: Intellectual Property – Patent
April 2021 – August 2021

L35. Express Mobile Inc. vs. Slack Technologies Inc.; Salesforce.com Inc.; Facebook Inc.; and eBay Inc.
Retaining party: Express Mobile Inc.
Venue: Western District of Texas, Waco Division; USPTO Patent Trial and Appeal Board
Case No.: 3:21-cv-02001-RS; 3:20-cv-08461-WHO; 6:20-cv-00803-ADA; 6:20-cv-802-ADA
Inter Partes Review No: IPR2021-01224, IPR2021-01226
Counsel: Feinberg Day Kramer Alberti Lim Tonkovich & Belloli LLP
Nature of suit: Intellectual Property – Patent
Deposition testimony on April 26, 2022
April 2021 – November 2022

L34. AudioEye Inc. v. Accessibe Ltd.
Retaining party: AudioEye
Venue: Western District of Texas, Waco Division; USPTO Patent Trial and Appeal Board
Case No.: 6:20-cv-00997-ADA
Inter Partes Review No: IPR2021-00797
Counsel: Knobbe Martens
Nature of suit: Intellectual Property – Patent
Deposition testimony on April 26, 2022
March 2021 – September 2022

L33. United Services Automobile Association v. PNC Bank N.A.
Retaining party: United Services Automobile Association
Venue: Eastern District of Texas, Marshal Division; USPTO Patent Trial and Appeal Board
Case No.: 2:20-CV-00319-JRG
Inter Partes Review No: IPR2021-01248, IPR2021-01163
Counsel: Irell & Manella LLP
Nature of suit: Intellectual Property – Patent
Deposition testimony on January 13, 2022 and March 18, 2022
Trial testimony on September 15, 2022
March 2021 – September 2022

L32. Global eTicket Exchange Ltd. v. Ticketmaster L.L.C., and Live Nation Worldwide, Inc.
Retaining party: Global eTicket Exchange
Venue: Western District of Texas, Waco Division
Case No.: 6:21-cv-00399
Counsel: Leichtman Law PLLC
Nature of suit: Intellectual Property – Patent
Deposition testimony on January 26, 2023 and February 2, 2023
Trial testimony on May 2, 2023
February 2021 – May 2023

L31. HEALTHeSTATE LLC v. The United States, ASM Research
Retaining party: The United States
Venue: The United States Court of Federal Claims
Case No.: 18-034
Counsel: United States Department of Justice
Nature of suit: Intellectual Property – Copyright
February 2021 – January 2022

L30. RE FormsNet LLC v. Glide Labs Inc.
Retaining party: Glide Labs Inc.
Venue: Superior Court of the State of California, County of San Francisco
Case No.: CGC-21-588988
Counsel: Keker, Van Nest & Peters LLP
Nature of suit: Intellectual Property – Trade Secret
January 2021 – February 2021

L29. Monode Marking Products, Inc. V. Columbia Marking Tools, Inc.
Retaining party: Monode Marking Products
Venue: Northern District of Ohio, Eastern Division
Case No.: 1:18-cv-16
Counsel: McDonald Hopkins
Nature of suit: Intellectual Property – Patent
Deposition testimony on February 22, 2021
January 2021 – June 2021

L28. HOV Services Inc. v. ASG Technologies Group Inc.
Retaining party: HOV Services Inc.
Venue: Southern District of New York
Case No.: 1:18-cv-09780-PKC
Counsel: Tarter Krinsky & Drogin LLP
Nature of suit: Breach of Contract, Software License, and Copyright
Deposition testimony on July 30, 2021
October 2020 – January 2024

L27. Wapp Tech Limited Partnership and Wapp Tech Corp v. Seattle Spinco, Inc., et al.
Wapp Tech Limited Partnership and Wapp Tech Corp v. Wells Fargo
Wapp Tech Limited Partnership and Wapp Tech Corp v. Bank of America
Retaining party: Wapp Tech Limited Partnership and Wapp Tech Corp
Venue: Eastern District of Texas, Sherman Division
Case No.: 4:18-cv-00469-ALM; 4:18-cv-00501-ALM; 4:18-cv-00519-ALM
Counsel: Feinberg Day Kramer Alberti Lim Tonkovich & Belloli LLP
Nature of suit: Intellectual Property – Patent
Deposition testimony on January 5, 2021 and February 19, 2021
Trial testimony on March 2, 2021 and March 5, 2021
October 2020 – March 2021

L26. The Hertz Corporation v. Accenture LLP
Retaining party: Accenture LLP
Venue: Southern District of New York
Case No.: 1:19-cv-03508-WHP
Counsel: Wiggin and Dana LLP
Nature of suit: Breach of Contract
March 2020 – May 2020

L25. Ameranth v. Pizza Hut, Inc., et al.
Retaining party: Ameranth
Venue: Southern District of California
Case No.: 3:11-cv-01810 DMS (WVG)
Counsel: Caldarelli Hejmanowski Page & Leer LLP, Fabiano Law Firm, P.C., Osborne Law LLC, and Watts Law Offices
Nature of suit: Intellectual Property – Patent
Deposition testimony on April 23, 2018, April 25, 2018, May 14, 2018, May 21, 2018, June 29, 2018, August 31, 2018, September 4, 2018, September 11, 2018, and September 17, 2018
January 2018 – October 2019

L24. IPA Technologies, Inc. v. ZTE (USA), Inc.
Retaining party: ZTE
Venue: Southern District of California
Case No.: 17-cv-01858-BAS-JLB
Counsel: Brinks Gilson & Lione
Nature of suit: Intellectual Property – Patent
December 2017 – March 2018

L23. Financial Information Technologies Inc. v. IControl Systems, USA, LLC
Retaining party: IControl Systems
Venue: Middle District of Florida, Tampa Division
Case No.: 8:17-cv-190-T-23MAP
Counsel: Rocke McLean Sbar
Nature of suit: Intellectual Property – Trade Secret
Deposition testimony on January 18, 2018
Trial testimony on February 28, 2020
September 2017 – March 2020

L22. Ford Motor Company v. Versata Software, Inc., F/K/A Trilogy Software, Inc.
Retaining party: Versata Software, Inc., F/K/A Trilogy Software, Inc.
Venue: Eastern District of Michigan, Southern Division
Case No.: 15-10628-MFL-EAS (consolidated with 15-11624-MFL-EAS)
Counsel: Winston and Strawn LLP; Ahmad, Zavitsanos, Anaipakos, Alavi, and Mensing P.C.
Nature of suit: Intellectual Property – Patent and Trade Secret
Deposition testimony on December 20 and 21, 2017, and Nov 9, 2018
Trial testimony on October 12, 13, and 14, 2022
February 2017 – October 2022

L21. Financial Information Technologies Inc. v. Mark Lopez
Retaining party: Mark Lopez
Venue: Middle District of Florida, Tampa Division
Case No.: 8:15-cv-02784-JSM-AEP
Counsel: Rocke McLean Sbar
Nature of suit: Intellectual Property – Trade Secret
Deposition testimony on March 18, 2017
January 2017 – September 2017

L20. Alexander Yershov v. Gannett Satellite Information Network, Inc. d/b/a USA Today
Retaining party: Gannett Satellite Information Network
Venue: District of Massachusetts
Case No.: 1:14-cv-13112
Counsel: ZwillGen PLLC

Nature of suit: Class Action
January 2017 – March 2017

L19. Chrome Systems Inc. v. Internet Brands Inc., Autodata Solutions Inc., et al.
Retaining party: Chrome Systems Inc.
Venue: Judicial Arbitration and Mediation Services, Inc.
Case No.: 1340012931
Counsel: Wachtell, Lipton, Rosen & Katz
Nature of suit: Intellectual Property – Software License
Deposition testimony on September 7, 2016
Arbitration testimony on September 16, 2016
June 2016 – October 2016

L18. TiVo Inc. v. Samsung Electronics Co., Ltd., et al.
Retaining party: TiVo Inc.
Venue: Eastern District of Texas
Case No.: 2:15-cv-1503
Counsel: Irell & Manella LLP
Nature of suit: Intellectual Property – Patent
April 2016 – December 2016

L17. Lenovo Adware Litigation
Retaining party: Lenovo
Venue: Northern District of California, San Jose Division
Case No.: 5:15-md-02624-RMW
Counsel: K&L Gates
Nature of suit: Class Action
April 2016 – July 2018

L16. Ericsson Inc., et al. v TCL Communication Technology Holdings, LTD, et al.
Retaining party: TCL
Venue: Eastern District of Texas; USPTO Patent Trial and Appeal Board
Case No.: 2:15-cv-11
Inter Partes Review No: IPR2015-01605
Counsel: Sheppard Mullin Richter & Hampton LLP; Morgan, Lewis, and Bockius LLP
Nature of suit: Intellectual Property – Patent
Deposition testimony on February 1, 2016; April 14, 2016; August 29, 2016; October 6, 2017
Trial testimony on December 6, 2017
March 2015 – December 2017

L15. STAR CO Ranger Digital, LLC v. Microsoft Corporation, et al.
Retaining party: Microsoft Corporation
Venue: Eastern District of Texas, Marshall Division
Case No.: 2:14-cv-00793
Counsel: Klarquist Sparkman, LLP
Nature of suit: Intellectual Property – Patent
March 2015 – May 2015

L14. YYZ, LLC v. Hewlett-Packard Company
Retaining party: Hewlett-Packard Company
Venue: District of Delaware
Case No.: 1:13-cv-00136-SLR
Counsel: Kenyon and Kenyon

Nature of suit: Intellectual Property – Patent
December 2014 – February 2015

L13. Data Engine Technologies LLC v. International Business Machines Corporation
Retaining party: Data Engine Technologies
Venue: Eastern District of Texas, Tyler Division
Case No.: 6:13-cv-00858-LED
Counsel: Ahmad, Zavitsanos, Anaipakos, Alavi, and Mensing P.C.
Nature of suit: Intellectual Property – Patent
Deposition testimony on November 23 and 24, 2015
February 2014 – December 2015

L12. Rockstar Consortium US LP and Netstar Technologies LLC v Google Inc.
Retaining party: Google Inc.
Venue: Eastern District of Texas, Marshall Division
Case No.: 2:13-cv-00893-JRG-RSP
Counsel: Quinn Emanuel Urquhart & Sullivan LLP
Nature of suit: Intellectual Property – Patent
October 2014 – February 2015

L11. Optimum Content Protection LLC v. Microsoft Corporation
Retaining party: Optimum Content Protection
Venue: Eastern District of Texas, Tyler Division
Case No.: 6:13-cv-00741-KNM
Counsel: Ahmad, Zavitsanos, Anaipakos, Alavi, and Mensing P.C.
Nature of suit: Intellectual Property – Patent
November 2014 – December 2014

L10. Alarm.com Inc. v. iControl Networks Inc.
Retaining party: Alarm.com Inc.
Venue: USPTO Patent Trial and Appeal Board
Patent Interference No: 106,001 (HHB)
Counsel: Fish and Richardson P.C.
Nature of suit: Intellectual Property – Patent
June 2014 – October 2014

L9. Thought Inc. v. Oracle Corporation
Retaining party: Thought Inc.
Venue: USPTO Patent Trial and Appeal Board
Inter Partes Review No: IPR2014-00117, IPR2014-00118, IPR2014-00119
Counsel: Sughrue Mion PLLC
Nature of suit: Intellectual Property – Patent
Deposition testimony on August 25 and 26, 2014
May 2014 – October 2014

L8. Steve Morsa v. Facebook, Inc.
Retaining party: Steve Morsa
Venue: Federal District Court, Central District of California
Case No.: 14-00161-JLS-JPR
Counsel: Bragalone Conroy PC
Nature of suit: Intellectual Property – Patent
April 2014 – December 2014

L7. United States of America v Alexander Rousseau
Retaining party: United States of America
Venue: Southern District of Florida
Case No.: 14-20243-KMM(s)
Counsel: U.S. Department of Justice
Nature of suit: Criminal
Trial testimony on July 15, 2014
June 2014 – July 2014

L6. Clori Isaac v. Geo. Mijilem & Company Inc. DBA SVM L.P., ConocoPhillips, et al.
Retaining party: Clori Isaac
Venue: Superior Court of California, County of Los Angeles
Case No.: BC477305
Counsel: Selman Breitman LLP
Nature of suit: Class Action
April 2014 – June 2014

L5. Miants, LLC, et al. v. Kevin Lasser, et al.
Retaining party: Miants LLC.
Venue: State of Michigan, Oakland County Circuit Court
Case No.: 2013-133695-CK
Counsel: Mantese, Honigman, Rossman & Williamson, P.C.
Nature of suit: Intellectual Property
April 2014 – June 2014

L4. Motorola Mobility Inc. v. Apple Inc.
Retaining party: Motorola Mobility Inc.
Venue: U.S. District Court for the Southern District of Florida
Case No.: 1:12-cv-20271-RNS
Counsel: Quinn Emanuel Urquhart & Sullivan LLP
Nature of suit: Intellectual Property – Patent
December 2013 – May 2014

L3. iControl Networks Inc. v. Alarm.com Inc., et al.
Retaining party: Alarm.com Inc.
Venue: U.S. District Court for the Eastern District of Virginia
Case No.: 13-834 (LMB/IDD) (E.D. Va.)
Counsel: Cravath, Swaine & Moore LLP
Nature of suit: Intellectual Property – Patent
Deposition testimony on December 13, 2013
September 2013 – December 2013

L2. United States ex rel. Hooper v. Lockheed Martin Corporation
Retaining party: United States ex rel. Hooper
Venue: U.S. District Court for the Central District of California
Case No.: 2:08-cv-00561BRO(PJWx)
Counsel: The Cullen Law Firm PLLC
Nature of suit: False Claims Act
August 2013 – January 2014

L1. Lotchinbek Samatov, Jakhongir Samatov, and SSD Software Solutions v. AirShowBuzz
Retaining party: Lotchinbek Samatov, Jakhongir Samatov, and SSD Software Solutions
Venue: Superior Court of California for the County of Los Angeles Central District
Case No.: BC488092

Counsel: Michelman & Robinson LLP
Nature of suit: Breach of Contract
June 2013 – August 2013