DocCode - SCORE

Placeholder Sheet for Supplemental Content

Application Number: 18885510 Document Date: 09/13/2024

The presence of this form indicates that the following document type was received in electronic format on the date identified above. This document is stored separately from the typical case contents which are stored in image format.

Since this was an electronic submission, there is no physical artifact folder, no artifact folder is recorded and no paper documents or physical media exist.

- Drawing

At the time of document entry (noted above):

- USPTO employees may access this supplemental content via Docket Application Viewer (DAV) or Supplemental Content Viewer (SCV).
- External customers may access this supplemental content via Patent Center.

Form Revision Date: March 1, 2024

MICROSOFT CORP.
EXHIBIT 1002

UNITED STATES
PATENT AND TRADEMARK OFFICE

P.O. Box 1450
Alexandria, VA 22313 - 1450
www.uspto.gov

ELECTRONIC ACKNOWLEDGEMENT RECEIPT

APPLICATION #	RECEIPT DATE / TIME	ATTORNEY DOCKET #
18/885,510	**09/13/2024 10:11:07 PM Z ET**	**15387FT**

Title of Invention

CONTEXTUAL AND RISK-BASED MULTI-FACTOR AUTHENTICATION

Application Information

APPLICATION TYPE	Utility - Nonprovisional Application under 35 USC 111(a)	PATENT #	-
CONFIRMATION #	5139	FILED BY	Aura Morrey
PATENT CENTER #	67175585	FILING DATE	-
CUSTOMER #	82318	FIRST NAMED INVENTOR	Jason Crabtree
CORRESPONDENCE ADDRESS	-	AUTHORIZED BY	Brian Galvin

Documents

TOTAL DOCUMENTS: 14

DOCUMENT	PAGES	DESCRIPTION	SIZE (KB)
240913_15387FT_ADS_AS_FILED.pdf	10	Application Data Sheet	2225 KB
240913_15387FT_TrackOne Request_AS_FILED.pdf	2	Track One Request	112 KB
240913_15387FT_Final_AS_FILED-APP.TEXT.docx	32	Application body structured text document	44 KB
240913_15387FT_Drawings_AS_FILED.pdf	11	Drawings-only black and white line drawings	878 KB
240913_15387FT_Declaration_Crabtree_AS_FILED.pdf	1	Oath or Declaration filed	98 KB
240913_15387FT_Declaration_MacLeod_AS_FILED.pdf	1	Oath or Declaration filed	86 KB

240913_15387FT_Declaration_Sellers_AS_FILED.pdf	1	Oath or Declaration filed	86 KB
240913_15387FT_QOMPLX LLC_POA_AS_FILED.pdf	1	Power of Attorney	135 KB
240913_15387FT_NPL_Simonian_Robust Value at Risk an Information Theoretic Approach_AS_FILED.pdf	3	Non Patent Literature	608 KB
240913_15387FT_NPL_Huang_Comparison of Value at Risk Approaches_AS_FILED.pdf	34	Non Patent Literature	10606 KB
240913_15387FT_NPL_Marozzo_P2P MapReduce Parallel Data Processing..._AS_FILED.pdf	21	Non Patent Literature	16172 KB
240913_15387FT_IDS_AS_FILED.pdf	8	Information Disclosure Statement (IDS) Form (SB08)	1333 KB
240913_15387FT_IntCommAuth_AS_FILED.pdf	2	Internet Communications Authorization	78 KB
240913_15387FT_Final_AS_FILED.pdf	32	Auxiliary PDF of Application	183 KB

Digest

DOCUMENT	MESSAGE DIGEST(SHA-512)
240913_15387FT_ADS_AS_FILED.pdf	CF0B8B79A021914039F930D20CA6E28CF5988F9E9E9CE527B74863F39CF3A8291A085E62C07FEA0C86B9AB7D734CF427130D8ACA3982E7BE9736BF1F7C2E93EC
240913_15387FT_TrackOne Request_AS_FILED.pdf	2FDEB8CAC91E714FD4538CE027C494DC1B2F5C40453A6B7D34B91FA0145276350766252A3DAA14C08FC490A032B874CEAB5721DB8E3DF4B8354DCF4884960625
240913_15387FT_Final_AS_FILED-APP.TEXT.docx	260C0ED5466D4AD7B85834AD705810C0B055ADB912349E6229B5056A60731B3B4DFAF0809D3124B34D8D1E9FB91E0E9340126B316DF166085CFC3BACDA449F3E
240913_15387FT_Drawings_AS_FILED.pdf	A8840B58A0E765D3A447BE4831090D2355F527E50B0D934E518972BDECD83921C8DC199B62B77A0A5457E45E00A842BEC468630C71B827FD56C750AE379A789F
240913_15387FT_Declaration_	1F9011A96F83362285CA485ADFF08E64B90D3B7EA6483293A

Crabtree_AS_FILED.pdf	4BDD0152D35F8512BB9BB516C93BDA0B689063C903BF3D16F6D52674521F1B676B5AFBD2FAC1F28
240913_15387FT_Declaration_MacLeod_AS_FILED.pdf	0FA0142780EF1ABA5A14C1C0D8F9830D9305CA1A92985351CA700070745E1C317936517E6E0D7A1447C4071D7F9CEB720D639097FA03AB9153A4D2FF88797D74
240913_15387FT_Declaration_Sellers_AS_FILED.pdf	E521CED0D64DA77E1248BB1BF563FABC5DAB78E9ACB58724EEFEDCFDD77AACE2759C160BA1AE5252A704DD536794AC32286AD39B41198DA702200CA4D16CE341
240913_15387FT_QOMPLX LLC_POA_AS_FILED.pdf	EDC005E6378BCF5F1E3532F6F080D77BF62CF956498DCFCF05F68CF3E6FE88E498D69439B5E1B5BEC51EFDC1BB57AB8C5733AC2A8E33F048C1244E71134F132C
240913_15387FT_NPL_Simonian_Robust Value at Risk an Information Theoretic Approach_AS_FILED.pdf	7F0E2610827EF5534F3B356EF8F6DBF58714E4557D2EFDF079D938C2BF3EC1FDE4D3847D45F221F6804E036788ECF4C6CDBC90299A8210071FA3C94C42F46AAD
240913_15387FT_NPL_Huang_Comparison of Value at Risk Approaches_AS_FILED.pdf	8E90B3CCD95F8E55857D086509B80F0FF6F28D125F3D69724ACF3272F8742003AF31C5CAAF8E8E11D35002797D40BF7DC988E6BE932BA9D3351A1A559F88B3A8
240913_15387FT_NPL_Marozzo_P2P MapReduce Parallel Data Processing..._AS_FILED.pdf	817C3F53CF2F765BCC8C6D969AE1E0119BDCA3D9198A1AE08E10646F11FB23D4591A766BDFE46139D154AC357375DCF4B0A6E70F964272314FA4927E04BB76CD
240913_15387FT_IDS_AS_FILED.pdf	C89877FCECD46E38F1039E8040CE49289CA9AAB38E139CC805F7184AF2AE03B12F5D9F5637D47ED8C54F1B694E568BB39DB064F974EF4B3D51189BE3F2485F1C
240913_15387FT_IntCommAuth_AS_FILED.pdf	0DC6D40DA0CE7B2597FDFC746ACE1E19205A72AD52BFA470D00B2F47F4D2B0313DA7412788E17897BCB0584504C5EEC269815E6D0DFBBEC9B4B520461519EBD5
240913_15387FT_Final_AS_FILED.pdf	98464131307B074FF774A6910B8FA157FD36B927191C9936F9A152B726EA96B1FC9B363B3BA49BA2B25306AB7FCF3B40C2A5AC812CFA19E69DEA9FF81D4AA6A5

This Acknowledgement Receipt evidences receipt on the noted date by the USPTO of the indicated documents, characterized by the applicant, and including page counts, where applicable. It serves as evidence of receipt similar to a Post Card, as described in MPEP 503.

New Applications Under 35 U.S.C. 111

If a new application is being filed and the application includes the necessary components for filing date (see 37 CFR 1.53(b)-(d) and MPEP 506), a Filing Receipt (37 CFR 1.54) will be issued in due course and the date shown on this Acknowledgement Receipt will establish the filing date of the application

National Stage of an International Application under 35 U.S.C. 371

If a timely submission to enter the national stage of an international application is compliant with the conditions of 35 U.S.C. 371 and other applicable requirements a Form PCT/DO/EO/903 indicating acceptance of the application as a national stage submission under 35 U.S.C. 371 will be issued in addition to the Filing Receipt, in due course.

New International Application Filed with the USPTO as a Receiving Office

If a new international application is being filed and the international application includes the necessary components for an international filing date (see PCT Article 11 and MPEP 1810), a Notification of the International Application Number and of the International Filing Date (Form PCT/RO/105) will be issued in due course, subject to prescriptions concerning national security, and the date shown on this Acknowledgement Receipt will establish the international filing date of the application.

UNITED STATES
PATENT AND TRADEMARK OFFICE

P.O. Box 1450
Alexandria, VA 22313 - 1450
www.uspto.gov

ELECTRONIC PAYMENT RECEIPT

APPLICATION #	RECEIPT DATE / TIME	ATTORNEY DOCKET #
18/885,510	**09/13/2024 10:11:07 PM Z ET**	**15387FT**

Title of Invention

CONTEXTUAL AND RISK-BASED MULTI-FACTOR AUTHENTICATION

Application Information

APPLICATION TYPE	Utility - Nonprovisional Application under 35 USC 111(a)	PATENT #	-
CONFIRMATION #	5139	FILED BY	Aura Morrey
PATENT CENTER #	67175585	AUTHORIZED BY	Brian Galvin
CUSTOMER #	82318	FILING DATE	-
CORRESPONDENCE ADDRESS	-	FIRST NAMED INVENTOR	Jason Crabtree

Payment Information

PAYMENT METHOD	PAYMENT TRANSACTION ID	PAYMENT AUTHORIZED BY
CARD / 1009	**E20249CM12118213**	**Aura Morrey**

FEE CODE	DESCRIPTION	ITEM PRICE($)	QUANTITY	ITEM TOTAL($)
1830	PROCESSING FEE, EXCEPT IN PROVISIONAL APPLICATIONS	140.00	1	140.00
1817	REQUEST FOR PRIORITIZED EXAMINATION	4200.00	1	4200.00
1111	UTILITY PATENT APPL. SEARCH FEE	700.00	1	700.00
1011	BASIC FILING FEE - UTILITY (PAPER FILING ALSO REQUIRES NON-ELECTRONIC FILING FEE UNDER 1.16(T))	320.00	1	320.00
1311	PATENT APPL. EXAMINATION FEE	800.00	1	800.00
1202	EACH CLAIM IN EXCESS OF 20	100.00	10	1000.00

1201	EACH INDEPENDENT CLAIM IN EXCESS OF THREE	480.00	1	480.00
			TOTAL AMOUNT:	**$7,640.00**

This Acknowledgement Receipt evidences receipt on the noted date by the USPTO of the indicated documents, characterized by the applicant, and including page counts, where applicable. It serves as evidence of receipt similar to a Post Card, as described in MPEP 503.

New Applications Under 35 U.S.C. 111

If a new application is being filed and the application includes the necessary components for filing date (see 37 CFR 1.53(b)-(d) and MPEP 506), a Filing Receipt (37 CFR 1.54) will be issued in due course and the date shown on this Acknowledgement Receipt will establish the filing date of the application

National Stage of an International Application under 35 U.S.C. 371

If a timely submission to enter the national stage of an international application is compliant with the conditions of 35 U.S.C. 371 and other applicable requirements a Form PCT/DO/EO/903 indicating acceptance of the application as a national stage submission under 35 U.S.C. 371 will be issued in addition to the Filing Receipt, in due course.

New International Application Filed with the USPTO as a Receiving Office

If a new international application is being filed and the international application includes the necessary components for an international filing date (see PCT Article 11 and MPEP 1810), a Notification of the International Application Number and of the International Filing Date (Form PCT/RO/105) will be issued in due course, subject to prescriptions concerning national security, and the date shown on this Acknowledgement Receipt will establish the international filing date of the application.

PTO/AIA/01 (06-12)
Approved for use through 01/31/2014. OMB 0651-0032
U.S. Patent and Trademark Office; U.S. DEPARTMENT OF COMMERCE
Under the Paperwork Reduction Act of 1995, no persons are required to respond to a collection of information unless it displays a valid OMB control number.

DECLARATION (37 CFR 1.63) FOR UTILITY OR DESIGN APPLICATION USING AN APPLICATION DATA SHEET (37 CFR 1.76)

Title of Invention	CONTEXTUAL AND RISK-BASED MULTI-FACTOR AUTHENTICATION

As the below named inventor, I hereby declare that:

This declaration is directed to:

- [x] The attached application, or
- [ ] United States application or PCT international application number _____

filed on _____.

The above-identified application was made or authorized to be made by me.

I believe that I am the original inventor or an original joint inventor of a claimed invention in the application.

I hereby acknowledge that any willful false statement made in this declaration is punishable under 18 U.S.C. 1001 by fine or imprisonment of not more than five (5) years, or both.

WARNING:

Petitioner/applicant is cautioned to avoid submitting personal information in documents filed in a patent application that may contribute to identity theft. Personal information such as social security numbers, bank account numbers, or credit card numbers (other than a check or credit card authorization form PTO-2038 submitted for payment purposes) is never required by the USPTO to support a petition or an application. If this type of personal information is included in documents submitted to the USPTO, petitioners/applicants should consider redacting such personal information from the documents before submitting them to the USPTO. Petitioner/applicant is advised that the record of a patent application is available to the public after publication of the application (unless a non-publication request in compliance with 37 CFR 1.213(a) is made in the application) or issuance of a patent. Furthermore, the record from an abandoned application may also be available to the public if the application is referenced in a published application or an issued patent (see 37 CFR 1.14). Checks and credit card authorization forms PTO-2038 submitted for payment purposes are not retained in the application file and therefore are not publicly available.

LEGAL NAME OF INVENTOR

Inventor: Andrew Sellers Date (Optional) :_____

Signature: Andrew Sellers

Note: An application data sheet (PTO/SB/14 or equivalent), including naming the entire inventive entity, must accompany this form or must have been previously filed. Use an additional PTO/AIA/01 form for each additional inventor.

This collection of information is required by 35 U.S.C. 115 and 37 CFR 1.63. The information is required to obtain or retain a benefit by the public which is to file (and by the USPTO to process) an application. Confidentiality is governed by 35 U.S.C. 122 and 37 CFR 1.11 and 1.14. This collection is estimated to take 1 minute to complete, including gathering, preparing, and submitting the completed application form to the USPTO. Time will vary depending upon the individual case. Any comments on the amount of time you require to complete this form and/or suggestions for reducing this burden, should be sent to the Chief Information Officer, U.S. Patent and Trademark Office, U.S. Department of Commerce, P.O. Box 1450, Alexandria, VA 22313-1450. DO NOT SEND FEES OR COMPLETED FORMS TO THIS ADDRESS. **SEND TO: Commissioner for Patents, P.O. Box 1450, Alexandria, VA 22313-1450.**

If you need assistance in completing the form, call 1-800-PTO-9199 and select option 2.

Doc ID: 2bc32c5950d4d51edfb5a6dfb1d589b251ed10df

PTO/SB/08a (01-22)
Approved for use through 05/31/2024. OMB 0651-0031
U.S. Patent and Trademark Office; U.S. DEPARTMENT OF COMMERCE
Under the Paperwork Reduction Act of 1995, no persons are required to respond to a collection of information unless it contains a valid OMB control number.

INFORMATION DISCLOSURE STATEMENT BY APPLICANT

(Not for submission under 37 CFR 1.99)

Application Number	
Filing Date	2024-09-13
First Named Inventor	Jason Crabtree
Art Unit	
Examiner Name	
Attorney Docket Number	15387FT

U.S.PATENTS Remove

Examiner Initial*	Cite No	Patent Number	Kind Code[1]	Issue Date	Name of Patentee or Applicant of cited Document	Pages,Columns,Lines where Relevant Passages or Relevant Figures Appear
	1	6477572	B1	2002-11-05	Elderton et al.	Entire Document
	2	6857073	B2	2005-02-15	French et al.	Entire Document
	3	7139747	B1	2006-11-21	Najork	Entire Document
	4	7227948	B2	2007-06-05	Ohkuma et al.	Entire Document
	5	7310632	B2	2007-12-18	Meek et al.	Entire Document
	6	7322044	B2	2008-01-22	Hrastar	Entire Document
	7	7530105	B2	2009-05-05	Gilbert et al.	Entire Document
	8	7546333	B2	2009-06-09	Alon et al.	Entire Document

INFORMATION DISCLOSURE STATEMENT BY APPLICANT (Not for submission under 37 CFR 1.99)	Application Number	
	Filing Date	2024-09-13
	First Named Inventor	Jason Crabtree
	Art Unit	
	Examiner Name	
	Attorney Docket Number	15387FT

	9	7685296	B2	2010-03-23	Brill et al.	Entire Document
	10	7818224	B2	2010-10-19	Boerner	Entire Document
	11	7818417	B2	2010-10-19	Ginis et al.	Entire Document
	12	7925561	B2	2011-04-12	Xu	Entire Document
	13	8069190	B2	2011-11-29	McColl et al.	Entire Document
	14	8346753	B2	2013-01-01	Hayes	Entire Document
	15	8457996	B2	2013-06-04	Winkler et al.	Entire Document
	16	8751867	B2	2014-06-10	Marvasti et al.	Entire Document
	17	8832840	B2	2014-09-09	Zhu et al.	Entire Document
	18	8949960	B2	2015-02-03	Berkman et al.	Entire Document
	19	9069976	B2	2015-06-30	Toole et al.	Entire Document

INFORMATION DISCLOSURE STATEMENT BY APPLICANT (Not for submission under 37 CFR 1.99)	Application Number	
	Filing Date	2024-09-13
	First Named Inventor	Jason Crabtree
	Art Unit	
	Examiner Name	
	Attorney Docket Number	15387FT

	20	9110706	B2	2015-08-18	Yu et al.	Entire Document
	21	9152727	B1	2015-10-06	Balducci et al.	Entire Document
	22	9256735	B2	2016-02-09	Stute	Entire Document
	23	9400962	B2	2016-07-26	Prasad	Entire Document
	24	9466041	B2	2016-10-11	Simitsis et al.	Entire Document
	25	9558220	B2	2017-01-31	Nixon et al.	Entire Document
	26	9560065	B2	2017-01-31	Neil et al.	Entire Document
	27	9652538	B2	2017-05-16	Shivaswamy et al.	Entire Document
	28	9774522	B2	2017-09-26	Vasseur et al.	Entire Document
	29	10044726	B2	2018-08-07	Dulkin et al.	Entire Document
	30	10191768	B2	2019-01-29	Bishop et al.	Entire Document

INFORMATION DISCLOSURE STATEMENT BY APPLICANT (Not for submission under 37 CFR 1.99)	Application Number	
	Filing Date	2024-09-13
	First Named Inventor	Jason Crabtree
	Art Unit	
	Examiner Name	
	Attorney Docket Number	15387FT

	31	10210246	B2	2019-02-19	Stojanovic et al.	Entire Document
	32	10216485	B2	2019-02-26	Misra et al.	Entire Document
	33	10270748	B2	2019-04-23	Briceno et al.	Entire Document
	34	10333992	B2	2019-06-25	Kinder et al.	Entire Document
	35	10643144	B2	2020-05-05	Bowers et al.	Entire Document
	36	10846391	B1	2020-11-24	Bonney et al.	Entire Document

If you wish to add additional U.S. Patent citation information please click the Add button. Add

U.S.PATENT APPLICATION PUBLICATIONS Remove

Examiner Initial*	Cite No	Publication Number	Kind Code[1]	Publication Date	Name of Patentee or Applicant of cited Document	Pages,Columns,Lines where Relevant Passages or Relevant Figures Appear
	1	20050165822	A1	2005-07-28	Yeung, Simon D. et al.	Entire Document
	2	20110307467	A1	2011-12-15	Severance	Entire Document
	3	20140324521	A1	2014-10-30	Mun	Entire Document

INFORMATION DISCLOSURE STATEMENT BY APPLICANT (Not for submission under 37 CFR 1.99)	Application Number	
	Filing Date	2024-09-13
	First Named Inventor	Jason Crabtree
	Art Unit	
	Examiner Name	
	Attorney Docket Number	15387FT

	4	20150319156	A1	2015-11-05	GUCCIONE et al.	Entire Document
	5	20160006629	A1	2016-01-07	Ianakiev et al.	Entire Document
	6	20160012235	A1	2016-01-14	Lee et al.	Entire Document
	7	20170090893	A1	2017-03-30	Aditya et al.	Entire Document
	8	20180082304	A1	2018-03-22	Summerlin et al.	Entire Document

If you wish to add additional U.S. Published Application citation information please click the Add button. Add

FOREIGN PATENT DOCUMENTS Remove

Examiner Initial*	Cite No	Foreign Document Number[3]	Country Code[2] ¡	Kind Code[4]	Publication Date	Name of Patentee or Applicant of cited Document	Pages,Columns,Lines where Relevant Passages or Relevant Figures Appear	T[5]
	1							☐

If you wish to add additional Foreign Patent Document citation information please click the Add button Add

NON-PATENT LITERATURE DOCUMENTS Remove

Examiner Initials*	Cite No	Include name of the author (in CAPITAL LETTERS), title of the article (when appropriate), title of the item (book, magazine, journal, serial, symposium, catalog, etc), date, pages(s), volume-issue number(s), publisher, city and/or country where published.	T[5]
	1	HUANG, ALEX, A Comparison of Value at Risk Approaches and a New Method with Extreme Value Theory and Kernel Estimator	☐

INFORMATION DISCLOSURE STATEMENT BY APPLICANT (Not for submission under 37 CFR 1.99)	Application Number	
	Filing Date	2024-09-13
	First Named Inventor	Jason Crabtree
	Art Unit	
	Examiner Name	
	Attorney Docket Number	15387FT

	2	MAROZZO, Fabrizio; TALIA, Domenico; TRUNFIO, Paolo; P2P-MapReduce - Parallel Data Processing in Dynamic Cloud Environments, Journal of Computer and System Sciences, 78 (2012) 1382–1402	☐
	3	SIMONIAN, Joseph, DAVIS, Josh., Robust Value-At-Risk: An Information Theoretic Approach, Applied Economic Letters, 2010, 17, 1551-1553.	☐

If you wish to add additional non-patent literature document citation information please click the Add button Add

EXAMINER SIGNATURE

Examiner Signature		Date Considered	

*EXAMINER: Initial if reference considered, whether or not citation is in conformance with MPEP 609. Draw line through a citation if not in conformance and not considered. Include copy of this form with next communication to applicant.

[1] See Kind Codes of USPTO Patent Documents at www.USPTO.GOV or MPEP 901.04. [2] Enter office that issued the document, by the two-letter code (WIPO Standard ST.3). [3] For Japanese patent documents, the indication of the year of the reign of the Emperor must precede the serial number of the patent document. [4] Kind of document by the appropriate symbols as indicated on the document under WIPO Standard ST.16 if possible. [5] Applicant is to place a check mark here if English language translation is attached.

INFORMATION DISCLOSURE STATEMENT BY APPLICANT (Not for submission under 37 CFR 1.99)	Application Number	
	Filing Date	2024-09-13
	First Named Inventor	Jason Crabtree
	Art Unit	
	Examiner Name	
	Attorney Docket Number	15387FT

CERTIFICATION STATEMENT

Please see 37 CFR 1.97(e) to make the appropriate selection(s):

☐ That each item of information contained in the information disclosure statement was first cited in any communication from a foreign patent office in a counterpart foreign application not more than three months prior to the filing of the information disclosure statement. See 37 CFR 1.97(e)(1).

OR

☐ That no item of information contained in the information disclosure statement was cited in a communication from a foreign patent office in a counterpart foreign application, and, to the knowledge of the person signing the certification after making reasonable inquiry, no item of information contained in the information disclosure statement was known to any individual designated in 37 CFR 1.56(c) more than three months prior to the filing of the information disclosure statement. See 37 CFR 1.97(e)(2).

☐ See attached certification statement.

☒ A certification statement is not submitted herewith.

FEE

☐ The fee set forth in 37 CFR 1.17 (p) has been submitted herewith.

COPIES

☐ An identification of an earlier application pursuant to 37 CFR 1.98 (d) (1) is attached.

SIGNATURE

A signature of the applicant or representative is required in accordance with CFR 1.33, 10.18. Please see CFR 1.4(d) for the form of the signature.

Signature	/BRIAN R. GALVIN/	Date (YYYY-MM-DD)	2024-09-13
Name/Print	Brian R. Galvin	Registration Number	50966

This collection of information is required by 37 CFR 1.97 and 1.98. The information is required to obtain or retain a benefit by the public which is to file (and by the USPTO to process) an application. Confidentiality is governed by 35 U.S.C. 122 and 37 CFR 1.14. This collection is estimated to take 1 hour to complete, including gathering, preparing and submitting the completed application form to the USPTO. Time will vary depending upon the individual case. Any comments on the amount of time you require to complete this form and/or suggestions for reducing this burden, should be sent to the Chief Information Officer, U.S. Patent and Trademark Office, U.S. Department of Commerce, P.O. Box 1450, Alexandria, VA 22313-1450. DO NOT SEND FEES OR COMPLETED FORMS TO THIS ADDRESS. **SEND TO: Commissioner for Patents, P.O. Box 1450, Alexandria, VA 22313-1450.**

Privacy Act Statement

The Privacy Act of 1974 (P.L. 93-579) requires that you be given certain information in connection with your submission of the attached form related to a patent application or patent. Accordingly, pursuant to the requirements of the Act, please be advised that: (1) the general authority for the collection of this information is 35 U.S.C. 2(b)(2); (2) furnishing of the information solicited is voluntary; and (3) the principal purpose for which the information is used by the U.S. Patent and Trademark Office is to process and/or examine your submission related to a patent application or patent. If you do not furnish the requested information, the U.S. Patent and Trademark Office may not be able to process and/or examine your submission, which may result in termination of proceedings or abandonment of the application or expiration of the patent.

The information provided by you in this form will be subject to the following routine uses:

1. The information on this form will be treated confidentially to the extent allowed under the Freedom of Information Act (5 U.S.C. 552) and the Privacy Act (5 U.S.C. 552a). Records from this system of records may be disclosed to the Department of Justice to determine whether the Freedom of Information Act requires disclosure of these record s.

2. A record from this system of records may be disclosed, as a routine use, in the course of presenting evidence to a court, magistrate, or administrative tribunal, including disclosures to opposing counsel in the course of settlement negotiations.

3. A record in this system of records may be disclosed, as a routine use, to a Member of Congress submitting a request involving an individual, to whom the record pertains, when the individual has requested assistance from the Member with respect to the subject matter of the record.

4. A record in this system of records may be disclosed, as a routine use, to a contractor of the Agency having need for the information in order to perform a contract. Recipients of information shall be required to comply with the requirements of the Privacy Act of 1974, as amended, pursuant to 5 U.S.C. 552a(m).

5. A record related to an International Application filed under the Patent Cooperation Treaty in this system of records may be disclosed, as a routine use, to the International Bureau of the World Intellectual Property Organization, pursuant to the Patent Cooperation Treaty.

6. A record in this system of records may be disclosed, as a routine use, to another federal agency for purposes of National Security review (35 U.S.C. 181) and for review pursuant to the Atomic Energy Act (42 U.S.C. 218(c)).

7. A record from this system of records may be disclosed, as a routine use, to the Administrator, General Services, or his/her designee, during an inspection of records conducted by GSA as part of that agency's responsibility to recommend improvements in records management practices and programs, under authority of 44 U.S.C. 2904 and 2906. Such disclosure shall be made in accordance with the GSA regulations governing inspection of records for this purpose, and any other relevant (i.e., GSA or Commerce) directive. Such disclosure shall not be used to make determinations about individuals.

8. A record from this system of records may be disclosed, as a routine use, to the public after either publication of the application pursuant to 35 U.S.C. 122(b) or issuance of a patent pursuant to 35 U.S.C. 151. Further, a record may be disclosed, subject to the limitations of 37 CFR 1.14, as a routine use, to the public if the record was filed in an application which became abandoned or in which the proceedings were terminated and which application is referenced by either a published application, an application open to public inspections or an issued patent.

9. A record from this system of records may be disclosed, as a routine use, to a Federal, State, or local law enforcement agency, if the USPTO becomes aware of a violation or potential violation of law or regulation.

Doc Code: ECOMM.AUTH/ECOMM.WTDW
Doc Description: Internet Communications Authorized/Internet Communications Authorization Withdrawn

PTO/SB/439 (11-15)

AUTHORIZATION FOR INTERNET COMMUNICATIONS IN A PATENT APPLICATION OR REQUEST TO WITHDRAW AUTHORIZATION FOR INTERNET COMMUNICATIONS		
	Application No.	
	Filing Date	2024-09-13
	First Named Inventor	Jason Crabtree
	Art Unit	
	Examiner Name	
	Practitioner Docket No.	15387FT

To: Commissioner for Patents
P.O. Box 1450
Alexandria, VA 22313-1450

I. To authorize permission for Internet Communications.

☑ Recognizing that Internet communications are not secure, I hereby authorize the USPTO to communicate with the undersigned and practitioners in accordance with 37 CFR 1.33 and 37 CFR 1.34 concerning any subject matter of this application via video conferencing, instant messaging, or electronic mail. I understand that a copy of these communications will be made of record in the application file. (MPEP 502.03)

II. To withdraw authorization for Internet Communications.

☐ The authorization given on _____, to the USPTO to communicate with the undersigned and any practitioner in accordance with 37 CFR 1.33 and 37 CFR 1.34 concerning any subject matter of this application via Internet communications such as video conferencing, instant messaging, or electronic mail is hereby withdrawn. I understand that the withdrawal is effective when approved rather than when received.

I am the

☐ applicant.

☑ attorney or agent of record. Registration number 50966.

☐ attorney or agent acting under 37 CFR 1.34. Registration number _____.

/BRIAN R. GALVIN/ — Signature

September 13, 2024 — Date

Brian R. Galvin — Typed or printed name

(360) 674-6233 — Telephone Number

NOTE: This form must be signed in accordance with 37 CFR 1.33. See 37 CFR 1.4 for signature requirements and certifications. Juristic entities must be represented by a patent practitioner (see 37 CFR 1.31, which is applicable to any paper filed on or after September 16, 2012, that is presented on behalf of a juristic entity, regardless of application filing date). Submit multiple forms if more than one signature is required, see below*.

☑ * Total of 1 forms are submitted.

Privacy Act Statement

The **Privacy Act of 1974 (P.L. 93-579)** requires that you be given certain information in connection with your submission of the attached form related to a patent application or patent. Accordingly, pursuant to the requirements of the Act, please be advised that: (1) the general authority for the collection of this information is 35 U.S.C. 2(b)(2); (2) furnishing of the information solicited is voluntary; and (3) the principal purpose for which the information is used by the U.S. Patent and Trademark Office is to process and/or examine your submission related to a patent application or patent. If you do not furnish the requested information, the U.S. Patent and Trademark Office may not be able to process and/or examine your submission, which may result in termination of proceedings or abandonment of the application or expiration of the patent.

The information provided by you in this form will be subject to the following routine uses:

1. The information on this form will be treated confidentially to the extent allowed under the Freedom of Information Act (5 U.S.C. 552) and the Privacy Act (5 U.S.C 552a). Records from this system of records may be disclosed to the Department of Justice to determine whether disclosure of these records is required by the Freedom of Information Act.
2. A record from this system of records may be disclosed, as a routine use, in the course of presenting evidence to a court, magistrate, or administrative tribunal, including disclosures to opposing counsel in the course of settlement negotiations.
3. A record in this system of records may be disclosed, as a routine use, to a Member of Congress submitting a request involving an individual, to whom the record pertains, when the individual has requested assistance from the Member with respect to the subject matter of the record.
4. A record in this system of records may be disclosed, as a routine use, to a contractor of the Agency having need for the information in order to perform a contract. Recipients of information shall be required to comply with the requirements of the Privacy Act of 1974, as amended, pursuant to 5 U.S.C. 552a(m).
5. A record related to an International Application filed under the Patent Cooperation Treaty in this system of records may be disclosed, as a routine use, to the International Bureau of the World Intellectual Property Organization, pursuant to the Patent Cooperation Treaty.
6. A record in this system of records may be disclosed, as a routine use, to another federal agency for purposes of National Security review (35 U.S.C. 181) and for review pursuant to the Atomic Energy Act (42 U.S.C. 218(c)).
7. A record from this system of records may be disclosed, as a routine use, to the Administrator, General Services, or his/her designee, during an inspection of records conducted by GSA as part of that agency's responsibility to recommend improvements in records management practices and programs, under authority of 44 U.S.C. 2904 and 2906. Such disclosure shall be made in accordance with the GSA regulations governing inspection of records for this purpose, and any other relevant (*i.e.*, GSA or Commerce) directive. Such disclosure shall not be used to make determinations about individuals.
8. A record from this system of records may be disclosed, as a routine use, to the public after either publication of the application pursuant to 35 U.S.C. 122(b) or issuance of a patent pursuant to 35 U.S.C. 151. Further, a record may be disclosed, subject to the limitations of 37 CFR 1.14, as a routine use, to the public if the record was filed in an application which became abandoned or in which the proceedings were terminated and which application is referenced by either a published application, an application open to public inspection or an issued patent.
9. A record from this system of records may be disclosed, as a routine use, to a Federal, State, or local law enforcement agency, if the USPTO becomes aware of a violation or potential violation of law or regulation.

PTO/AIA/01 (06-12)
Approved for use through 01/31/2014. OMB 0651-0032
U.S. Patent and Trademark Office; U.S. DEPARTMENT OF COMMERCE
Under the Paperwork Reduction Act of 1995, no persons are required to respond to a collection of information unless it displays a valid OMB control number.

DECLARATION (37 CFR 1.63) FOR UTILITY OR DESIGN APPLICATION USING AN APPLICATION DATA SHEET (37 CFR 1.76)

Title of Invention	CONTEXTUAL AND RISK-BASED MULTI-FACTOR AUTHENTICATION

As the below named inventor, I hereby declare that:

This declaration is directed to:

- [x] The attached application, or
- [ ] United States application or PCT international application number _____

filed on _____.

The above-identified application was made or authorized to be made by me.

I believe that I am the original inventor or an original joint inventor of a claimed invention in the application.

I hereby acknowledge that any willful false statement made in this declaration is punishable under 18 U.S.C. 1001 by fine or imprisonment of not more than five (5) years, or both.

WARNING:

Petitioner/applicant is cautioned to avoid submitting personal information in documents filed in a patent application that may contribute to identity theft. Personal information such as social security numbers, bank account numbers, or credit card numbers (other than a check or credit card authorization form PTO-2038 submitted for payment purposes) is never required by the USPTO to support a petition or an application. If this type of personal information is included in documents submitted to the USPTO, petitioners/applicants should consider redacting such personal information from the documents before submitting them to the USPTO. Petitioner/applicant is advised that the record of a patent application is available to the public after publication of the application (unless a non-publication request in compliance with 37 CFR 1.213(a) is made in the application) or issuance of a patent. Furthermore, the record from an abandoned application may also be available to the public if the application is referenced in a published application or an issued patent (see 37 CFR 1.14). Checks and credit card authorization forms PTO-2038 submitted for payment purposes are not retained in the application file and therefore are not publicly available.

LEGAL NAME OF INVENTOR

Inventor: Jason Crabtree Date (Optional) : _____

Signature: _____

Note: An application data sheet (PTO/SB/14 or equivalent), including naming the entire inventive entity, must accompany this form or must have been previously filed. Use an additional PTO/AIA/01 form for each additional inventor.

This collection of information is required by 35 U.S.C. 115 and 37 CFR 1.63. The information is required to obtain or retain a benefit by the public which is to file (and by the USPTO to process) an application. Confidentiality is governed by 35 U.S.C. 122 and 37 CFR 1.11 and 1.14. This collection is estimated to take 1 minute to complete, including gathering, preparing, and submitting the completed application form to the USPTO. Time will vary depending upon the individual case. Any comments on the amount of time you require to complete this form and/or suggestions for reducing this burden, should be sent to the Chief Information Officer, U.S. Patent and Trademark Office, U.S. Department of Commerce, P.O. Box 1450, Alexandria, VA 22313-1450. DO NOT SEND FEES OR COMPLETED FORMS TO THIS ADDRESS. **SEND TO: Commissioner for Patents, P.O. Box 1450, Alexandria, VA 22313-1450.**

If you need assistance in completing the form, call 1-800-PTO-9199 and select option 2.

Doc ID: 5bade7a2a5d146571ca486be7d94f2439693ea95

Under the Paperwork Reduction Act of 1995, no persons are required to respond to a collection of information unless it contains a valid OMB control number.

Application Data Sheet 37 CFR 1.76	Attorney Docket Number	15387FT
	Application Number	
Title of Invention	CONTEXTUAL AND RISK-BASED MULTI-FACTOR AUTHENTICATION	

The application data sheet is part of the provisional or nonprovisional application for which it is being submitted. The following form contains the bibliographic data arranged in a format specified by the United States Patent and Trademark Office as outlined in 37 CFR 1.76.
This document may be completed electronically and submitted to the Office in electronic format using the Electronic Filing System (EFS) or the document may be printed and included in a paper filed application.

Secrecy Order 37 CFR 5.2:

☐ Portions or all of the application associated with this Application Data Sheet may fall under a Secrecy Order pursuant to 37 CFR 5.2 (Paper filers only. Applications that fall under Secrecy Order may not be filed electronically.)

Inventor Information:

Inventor 1 Remove

Legal Name

Prefix	Given Name	Middle Name	Family Name	Suffix
	Jason		Crabtree	

Residence Information (Select One) ◉ US Residency ◯ Non US Residency ◯ Active US Military Service

City	Vienna	State/Province	VA	Country of Residence	US

Mailing Address of Inventor:

Address 1	10208 Westford Drive		
Address 2			
City	Vienna	State/Province	VA
Postal Code	22182	Country	US

Inventor 2 Remove

Legal Name

Prefix	Given Name	Middle Name	Family Name	Suffix
	Andrew		Sellers	

Residence Information (Select One) ◉ US Residency ◯ Non US Residency ◯ Active US Military Service

City	Monument	State/Province	CO	Country of Residence	US

Mailing Address of Inventor:

Address 1	16258 Windsor Creek Dr.		
Address 2			
City	Monument	State/Province	CO
Postal Code	80132	Country	US

Inventor 3 Remove

Legal Name

Prefix	Given Name	Middle Name	Family Name	Suffix
	Ian		MacLeod	

Residence Information (Select One) ◉ US Residency ◯ Non US Residency ◯ Active US Military Service

Under the Paperwork Reduction Act of 1995, no persons are required to respond to a collection of information unless it contains a valid OMB control number.

Application Data Sheet 37 CFR 1.76	Attorney Docket Number	15387FT
	Application Number	
Title of Invention	CONTEXTUAL AND RISK-BASED MULTI-FACTOR AUTHENTICATION	

City	Arlington	**State/Province**	VA	**Country of Residence**	US

Mailing Address of Inventor:

Address 1	520 25th St. S		
Address 2			
City	Arlington	**State/Province**	VA
Postal Code	22202	**Country**	US

All Inventors Must Be Listed - Additional Inventor Information blocks may be generated within this form by selecting the **Add** button. Add

Correspondence Information:

Enter either Customer Number or complete the Correspondence Information section below. For further information see 37 CFR 1.33(a).

☐ **An Address is being provided for the correspondence Information of this application.**

Customer Number	82318		
Email Address	uspto@galvinpatentlaw.com	Add Email	Remove Email

Application Information:

Title of the Invention	CONTEXTUAL AND RISK-BASED MULTI-FACTOR AUTHENTICATION		
Attorney Docket Number	15387FT	**Small Entity Status Claimed**	☐
Application Type	Nonprovisional		
Subject Matter	Utility		
Total Number of Drawing Sheets (if any)	11	**Suggested Figure for Publication (if any)**	1

Filing By Reference:

Only complete this section when filing an application by reference under 35 U.S.C. 111(c) and 37 CFR 1.57(a). Do not complete this section if application papers including a specification and any drawings are being filed. Any domestic benefit or foreign priority information must be provided in the appropriate section(s) below (i.e., "Domestic Benefit/National Stage Information" and "Foreign Priority Information").

For the purposes of a filing date under 37 CFR 1.53(b), the description and any drawings of the present application are replaced by this reference to the previously filed application, subject to conditions and requirements of 37 CFR 1.57(a).

Application number of the previously filed application	Filing date (YYYY-MM-DD)	Intellectual Property Authority or Country

Publication Information:

☐ Request Early Publication (Fee required at time of Request 37 CFR 1.219)

☐ **Request Not to Publish.** I hereby request that the attached application not be published under 35 U.S.C. 122(b) and certify that the invention disclosed in the attached application **has not and will not** be the subject of an application filed in another country, or under a multilateral international agreement, that requires publication at eighteen months after filing.

Under the Paperwork Reduction Act of 1995, no persons are required to respond to a collection of information unless it contains a valid OMB control number.

Application Data Sheet 37 CFR 1.76	Attorney Docket Number	15387FT
	Application Number	
Title of Invention	CONTEXTUAL AND RISK-BASED MULTI-FACTOR AUTHENTICATION	

Representative Information:

Representative information should be provided for all practitioners having a power of attorney in the application. Providing this information in the Application Data Sheet does not constitute a power of attorney in the application (see 37 CFR 1.32).
Either enter Customer Number or complete the Representative Name section below. If both sections are completed the customer Number will be used for the Representative Information during processing.

Please Select One:	(•) Customer Number	( ) US Patent Practitioner	( ) Limited Recognition (37 CFR 11.9)
Customer Number	82318		

Domestic Benefit/National Stage Information:

This section allows for the applicant to either claim benefit under 35 U.S.C. 119(e), 120, 121, 365(c), or 386(c) or indicate National Stage entry from a PCT application. Providing benefit claim information in the Application Data Sheet constitutes the specific reference required by 35 U.S.C. 119(e) or 120, and 37 CFR 1.78.
When referring to the current application, please leave the "Application Number" field blank.

Prior Application Status	Pending		Remove
Application Number	Continuity Type	Prior Application Number	Filing or 371(c) Date (YYYY-MM-DD)
	Continuation of	18464623	2023-09-11

Prior Application Status	Patented				Remove
Application Number	Continuity Type	Prior Application Number	Filing Date (YYYY-MM-DD)	Patent Number	Issue Date (YYYY-MM-DD)
18464623	Continuation of	17539137	2021-11-30	11757872	2023-09-12

Prior Application Status	Patented				Remove
Application Number	Continuity Type	Prior Application Number	Filing Date (YYYY-MM-DD)	Patent Number	Issue Date (YYYY-MM-DD)
17539137	Continuation of	16856827	2020-04-23	11218474	2022-01-04

Prior Application Status	Patented				Remove
Application Number	Continuity Type	Prior Application Number	Filing Date (YYYY-MM-DD)	Patent Number	Issue Date (YYYY-MM-DD)
16856827	Continuation of	15790860	2017-10-23	10742647	2020-08-11

Prior Application Status	Expired		Remove
Application Number	Continuity Type	Prior Application Number	Filing or 371(c) Date (YYYY-MM-DD)
15790860	Claims benefit of provisional	62574708	2017-10-19

Under the Paperwork Reduction Act of 1995, no persons are required to respond to a collection of information unless it contains a valid OMB control number.

Application Data Sheet 37 CFR 1.76	Attorney Docket Number	15387FT
	Application Number	
Title of Invention	CONTEXTUAL AND RISK-BASED MULTI-FACTOR AUTHENTICATION	

Prior Application Status	Abandoned		Remove
Application Number	Continuity Type	Prior Application Number	Filing or 371(c) Date (YYYY-MM-DD)
15790860	Continuation in part of	15616427	2017-06-07
Prior Application Status	Abandoned		Remove
Application Number	Continuity Type	Prior Application Number	Filing or 371(c) Date (YYYY-MM-DD)
15616427	Continuation in part of	14925974	2015-10-28
Prior Application Status	Patented		Remove

Application Number	Continuity Type	Prior Application Number	Filing Date (YYYY-MM-DD)	Patent Number	Issue Date (YYYY-MM-DD)
15790860	Continuation in part of	15237625	2016-08-15	10248910	2019-04-02

Prior Application Status	Abandoned		Remove
Application Number	Continuity Type	Prior Application Number	Filing or 371(c) Date (YYYY-MM-DD)
15237625	Continuation in part of	15206195	2016-07-08
Prior Application Status	Abandoned		Remove
Application Number	Continuity Type	Prior Application Number	Filing or 371(c) Date (YYYY-MM-DD)
15206195	Continuation in part of	15186453	2016-06-18
Prior Application Status	Abandoned		Remove
Application Number	Continuity Type	Prior Application Number	Filing or 371(c) Date (YYYY-MM-DD)
15186453	Continuation in part of	15166158	2016-05-26
Prior Application Status	Patented		Remove

Application Number	Continuity Type	Prior Application Number	Filing Date (YYYY-MM-DD)	Patent Number	Issue Date (YYYY-MM-DD)
15166158	Continuation in part of	15141752	2016-04-28	10860962	2020-12-08

Prior Application Status	Patented		Remove

Application Number	Continuity Type	Prior Application Number	Filing Date (YYYY-MM-DD)	Patent Number	Issue Date (YYYY-MM-DD)
15141752	Continuation in part of	15091563	2016-04-05	10204147	2019-02-12

Prior Application Status	Patented		Remove

Application Number	Continuity Type	Prior Application Number	Filing Date (YYYY-MM-DD)	Patent Number	Issue Date (YYYY-MM-DD)
15141752	Continuation in part of	14986536	2015-12-31	10210255	2019-02-19

Under the Paperwork Reduction Act of 1995, no persons are required to respond to a collection of information unless it contains a valid OMB control number.

Application Data Sheet 37 CFR 1.76	Attorney Docket Number	15387FT
	Application Number	
Title of Invention	CONTEXTUAL AND RISK-BASED MULTI-FACTOR AUTHENTICATION	

Prior Application Status	Abandoned		Remove
Application Number	Continuity Type	Prior Application Number	Filing or 371(c) Date (YYYY-MM-DD)
15141752	Continuation in part of	14925974	2015-10-28
Additional Domestic Benefit/National Stage Data may be generated within this form by selecting the **Add** button.			Add

Foreign Priority Information:

This section allows for the applicant to claim priority to a foreign application. Providing this information in the application data sheet constitutes the claim for priority as required by 35 U.S.C. 119(b) and 37 CFR 1.55. When priority is claimed to a foreign application that is eligible for retrieval under the priority document exchange program (PDX)[i] the information will be used by the Office to automatically attempt retrieval pursuant to 37 CFR 1.55(i)(1) and (2). Under the PDX program, applicant bears the ultimate responsibility for ensuring that a copy of the foreign application is received by the Office from the participating foreign intellectual property office, or a certified copy of the foreign priority application is filed, within the time period specified in 37 CFR 1.55(g)(1).

			Remove
Application Number	Country[i]	Filing Date (YYYY-MM-DD)	Access Code[i] (if applicable)
Additional Foreign Priority Data may be generated within this form by selecting the **Add** button.			Add

Statement under 37 CFR 1.55 or 1.78 for AIA (First Inventor to File) Transition Applications

☐ This application (1) claims priority to or the benefit of an application filed before March 16, 2013 and (2) also contains, or contained at any time, a claim to a claimed invention that has an effective filing date on or after March 16, 2013.
NOTE: By providing this statement under 37 CFR 1.55 or 1.78, this application, with a filing date on or after March 16, 2013, will be examined under the first inventor to file provisions of the AIA.

Under the Paperwork Reduction Act of 1995, no persons are required to respond to a collection of information unless it contains a valid OMB control number.

Application Data Sheet 37 CFR 1.76	Attorney Docket Number	15387FT
	Application Number	
Title of Invention	CONTEXTUAL AND RISK-BASED MULTI-FACTOR AUTHENTICATION	

Authorization or Opt-Out of Authorization to Permit Access:

When this Application Data Sheet is properly signed and filed with the application, applicant has provided written authority to permit a participating foreign intellectual property (IP) office access to the instant application-as-filed (see paragraph A in subsection 1 below) and the European Patent Office (EPO) access to any search results from the instant application (see paragraph B in subsection 1 below).

Should applicant choose not to provide an authorization identified in subsection 1 below, applicant **must opt-out** of the authorization by checking the corresponding box A or B or both in subsection 2 below.

NOTE: This section of the Application Data Sheet is **ONLY** reviewed and processed with the **INITIAL** filing of an application. After the initial filing of an application, an Application Data Sheet cannot be used to provide or rescind authorization for access by a foreign IP office(s). Instead, Form PTO/SB/39 or PTO/SB/69 must be used as appropriate.

1. Authorization to Permit Access by a Foreign Intellectual Property Office(s)

A. Priority Document Exchange (PDX) - Unless box A in subsection 2 (opt-out of authorization) is checked, the undersigned hereby **grants the USPTO authority** to provide the European Patent Office (EPO), the Japan Patent Office (JPO), the Korean Intellectual Property Office (KIPO), the State Intellectual Property Office of the People's Republic of China (SIPO), the World Intellectual Property Organization (WIPO), and any other foreign intellectual property office participating with the USPTO in a bilateral or multilateral priority document exchange agreement in which a foreign application claiming priority to the instant patent application is filed, access to: (1) the instant patent application-as-filed and its related bibliographic data, (2) any foreign or domestic application to which priority or benefit is claimed by the instant application and its related bibliographic data, and (3) the date of filing of this Authorization. See 37 CFR 1.14(h)(1).

B. Search Results from U.S. Application to EPO - Unless box B in subsection 2 (opt-out of authorization) is checked, the undersigned hereby **grants the USPTO authority** to provide the EPO access to the bibliographic data and search results from the instant patent application when a European patent application claiming priority to the instant patent application is filed. See 37 CFR 1.14(h)(2).

The applicant is reminded that the EPO's Rule 141(1) EPC (European Patent Convention) requires applicants to submit a copy of search results from the instant application without delay in a European patent application that claims priority to the instant application.

2. Opt-Out of Authorizations to Permit Access by a Foreign Intellectual Property Office(s)

☐ A. Applicant **DOES NOT** authorize the USPTO to permit a participating foreign IP office access to the instant application-as-filed. If this box is checked, the USPTO will not be providing a participating foreign IP office with any documents and information identified in subsection 1A above.

☐ B. Applicant **DOES NOT** authorize the USPTO to transmit to the EPO any search results from the instant patent application. If this box is checked, the USPTO will not be providing the EPO with search results from the instant application.

NOTE: Once the application has published or is otherwise publicly available, the USPTO may provide access to the application in accordance with 37 CFR 1.14.

Under the Paperwork Reduction Act of 1995, no persons are required to respond to a collection of information unless it contains a valid OMB control number.

Application Data Sheet 37 CFR 1.76	Attorney Docket Number	15387FT
	Application Number	
Title of Invention	CONTEXTUAL AND RISK-BASED MULTI-FACTOR AUTHENTICATION	

Applicant Information:

Providing assignment information in this section does not substitute for compliance with any requirement of part 3 of Title 37 of CFR to have an assignment recorded by the Office.

Applicant 1 Remove

If the applicant is the inventor (or the remaining joint inventor or inventors under 37 CFR 1.45), this section should not be completed. The information to be provided in this section is the name and address of the legal representative who is the applicant under 37 CFR 1.43; or the name and address of the assignee, person to whom the inventor is under an obligation to assign the invention, or person who otherwise shows sufficient proprietary interest in the matter who is the applicant under 37 CFR 1.46. If the applicant is an applicant under 37 CFR 1.46 (assignee, person to whom the inventor is obligated to assign, or person who otherwise shows sufficient proprietary interest) together with one or more joint inventors, then the joint inventor or inventors who are also the applicant should be identified in this section.

Clear

- (●) Assignee
- ( ) Legal Representative under 35 U.S.C. 117
- ( ) Joint Inventor
- ( ) Person to whom the inventor is obligated to assign.
- ( ) Person who shows sufficient proprietary interest

If applicant is the legal representative, indicate the authority to file the patent application, the inventor is:

Name of the Deceased or Legally Incapacitated Inventor:

If the Applicant is an Organization check here. [X]

Organization Name	QOMPLX LLC		
Mailing Address Information For Applicant:			
Address 1	1900 Reston Metro Plaza		
Address 2	Ste. 600		
City	Reston	**State/Province**	VA
Country	US	Postal Code	20190
Phone Number		Fax Number	
Email Address			

Additional Applicant Data may be generated within this form by selecting the Add button. Add

Assignee Information including Non-Applicant Assignee Information:

Providing assignment information in this section does not substitute for compliance with any requirement of part 3 of Title 37 of CFR to have an assignment recorded by the Office.

Under the Paperwork Reduction Act of 1995, no persons are required to respond to a collection of information unless it contains a valid OMB control number.

Application Data Sheet 37 CFR 1.76	Attorney Docket Number	15387FT
	Application Number	
Title of Invention	CONTEXTUAL AND RISK-BASED MULTI-FACTOR AUTHENTICATION	

Assignee 1

Complete this section if assignee information, including non-applicant assignee information, is desired to be included on the patent application publication. An assignee-applicant identified in the "Applicant Information" section will appear on the patent application publication as an applicant. For an assignee-applicant, complete this section only if identification as an assignee is also desired on the patent application publication.

Remove

If the Assignee or Non-Applicant Assignee is an Organization check here. ☐

Prefix	**Given Name**	Middle Name	**Family Name**	Suffix

Mailing Address Information For Assignee including Non-Applicant Assignee:

Address 1			
Address 2			
City		**State/Province**	
Country		Postal Code	
Phone Number		Fax Number	
Email Address			

Additional Assignee or Non-Applicant Assignee Data may be generated within this form by selecting the Add button. Add

Signature:

Remove

NOTE: This Application Data Sheet must be signed in accordance with 37 CFR 1.33(b). **However, if this Application Data Sheet is submitted with the INITIAL filing of the application and either box A or B is not checked in subsection 2 of the "Authorization or Opt-Out of Authorization to Permit Access" section, then this form must also be signed in accordance with 37 CFR 1.14(c).**

This Application Data Sheet **must** be signed by a patent practitioner if one or more of the applicants is a **juristic entity** (e.g., corporation or association). If the applicant is two or more joint inventors, this form must be signed by a patent practitioner, **all** joint inventors who are the applicant, or one or more joint inventor-applicants who have been given power of attorney (e.g., see USPTO Form PTO/AIA/81) on behalf of **all** joint inventor-applicants.

See 37 CFR 1.4(d) for the manner of making signatures and certifications.

Signature	/BRIAN R. GALVIN/			Date (YYYY-MM-DD)	2024-09-13
First Name	Brian	Last Name	Galvin	Registration Number	50966

Additional Signature may be generated within this form by selecting the Add button. Add

Application Data Sheet 37 CFR 1.76	Attorney Docket Number	15387FT
	Application Number	
Title of Invention	CONTEXTUAL AND RISK-BASED MULTI-FACTOR AUTHENTICATION	

This collection of information is required by 37 CFR 1.76. The information is required to obtain or retain a benefit by the public which is to file (and by the USPTO to process) an application. Confidentiality is governed by 35 U.S.C. 122 and 37 CFR 1.14. This collection is estimated to take 23 minutes to complete, including gathering, preparing, and submitting the completed application data sheet form to the USPTO. Time will vary depending upon the individual case. Any comments on the amount of time you require to complete this form and/or suggestions for reducing this burden, should be sent to the Chief Information Officer, U.S. Patent and Trademark Office, U.S. Department of Commerce, P.O. Box 1450, Alexandria, VA 22313-1450. DO NOT SEND FEES OR COMPLETED FORMS TO THIS ADDRESS. **SEND TO: Commissioner for Patents, P.O. Box 1450, Alexandria, VA 22313-1450.**

Privacy Act Statement

The Privacy Act of 1974 (P.L. 93-579) requires that you be given certain information in connection with your submission of the attached form related to a patent application or patent. Accordingly, pursuant to the requirements of the Act, please be advised that: (1) the general authority for the collection of this information is 35 U.S.C. 2(b)(2); (2) furnishing of the information solicited is voluntary; and (3) the principal purpose for which the information is used by the U.S. Patent and Trademark Office is to process and/or examine your submission related to a patent application or patent. If you do not furnish the requested information, the U.S. Patent and Trademark Office may not be able to process and/or examine your submission, which may result in termination of proceedings or abandonment of the application or expiration of the patent.

The information provided by you in this form will be subject to the following routine uses:

1 The information on this form will be treated confidentially to the extent allowed under the Freedom of Information Act (5 U.S.C. 552) and the Privacy Act (5 U.S.C. 552a). Records from this system of records may be disclosed to the Department of Justice to determine whether the Freedom of Information Act requires disclosure of these records.

2. A record from this system of records may be disclosed, as a routine use, in the course of presenting evidence to a court, magistrate, or administrative tribunal, including disclosures to opposing counsel in the course of settlement negotiations.

3 A record in this system of records may be disclosed, as a routine use, to a Member of Congress submitting a request involving an individual, to whom the record pertains, when the individual has requested assistance from the Member with respect to the subject matter of the record.

4. A record in this system of records may be disclosed, as a routine use, to a contractor of the Agency having need for the information in order to perform a contract. Recipients of information shall be required to comply with the requirements of the Privacy Act of 1974, as amended, pursuant to 5 U.S.C. 552a(m).

5. A record related to an International Application filed under the Patent Cooperation Treaty in this system of records may be disclosed, as a routine use, to the International Bureau of the World Intellectual Property Organization, pursuant to the Patent CooperationTreaty.

6. A record in this system of records may be disclosed, as a routine use, to another federal agency for purposes of National Security review (35 U.S.C. 181) and for review pursuant to the Atomic Energy Act (42 U.S.C. 218(c)).

7. A record from this system of records may be disclosed, as a routine use, to the Administrator, General Services, or his/her designee, during an inspection of records conducted by GSA as part of that agency's responsibility to recommend improvements in records management practices and programs, under authority of 44 U.S.C. 2904 and 2906. Such disclosure shall be made in accordance with the GSA regulations governing inspection of records for this purpose, and any other relevant (i.e., GSA or Commerce) directive. Such disclosure shall not be used to make determinations about individuals.

8. A record from this system of records may be disclosed, as a routine use, to the public after either publication of the application pursuant to 35 U.S.C. 122(b) or issuance of a patent pursuant to 35 U.S.C. 151. Further, a record may be disclosed, subject to the limitations of 37 CFR 1.14, as a routine use, to the public if the record was filed in an application which became abandoned or in which the proceedings were terminated and which application is referenced by either a published application, an application open to public inspections or an issued patent.

9. A record from this system of records may be disclosed, as a routine use, to a Federal, State, or local law enforcement agency, if the USPTO becomes aware of a violation or potential violation of law or regulation.

CONTEXTUAL AND RISK-BASED MULTI-FACTOR AUTHENTICATION

CROSS-REFERENCE TO RELATED APPLICATIONS

[0001] This application is a continuation of U.S. patent application Ser. No. 18/464,623, titled "RISK-BASED MULTI-FACTOR AUTHENTICATION", filed on Sept. 11, 2023, which is a continuation of U.S. patent application Ser. No. 17/539,137, titled "CONTEXTUAL AND RISK-BASED MULTI-FACTOR AUTHENTICATION", filed on Nov. 30, 2021, now issued as U.S. Patent No. 11,757,872 on Sept. 12, 2023, which is a continuation of U.S. patent application Ser. No. 16/856,827, titled "CONTEXTUAL AND RISK-BASED MULTI-FACTOR AUTHENTICATION", filed on Apr. 23, 2020, now issued as U.S. Patent No. 11,218,474 on Jan. 4, 2022, which is a continuation of U.S. patent application Ser. No. 15/790,860, titled "CONTEXTUAL AND RISK-BASED MULTI-FACTOR AUTHENTICATION", filed on Oct. 23, 2017, now issued as U.S. Patent No. 10,742,647 on Aug. 11, 2020, which claims priority to U.S. provisional patent application 62/574,708 titled "CONTEXTUAL AND RISK-BASED MULTI-FACTOR AUTHENTICATION", filed on Oct. 19, 2017, and is also a continuation-in-part of U.S. patent application Ser. No. 15/616,427 titled "RAPID PREDICTIVE ANALYSIS OF VERY LARGE DATA SETS USING AN ACTOR-DRIVEN DISTRIBUTED COMPUTATIONAL GRAPH", filed on Jun. 7, 2017, which is a continuation-in-part of U.S. patent application Ser. No. 14/925,974, titled "RAPID PREDICTIVE ANALYSIS OF VERY LARGE DATA SETS USING THE DISTRIBUTED COMPUTATIONAL GRAPH", filed on Oct. 28, 2015; said application Ser. No. 15/790,860 is also a continuation-in-part of U.S. patent application Ser. No. 15/237,625, titled "DETECTION MITIGATION AND REMEDIATION OF CYBERATTACKS EMPLOYING AN ADVANCED CYBER-DECISION PLATFORM", filed on Aug. 15, 2016, now issued as U.S. Patent No. 10,248,910 on Apr. 2, 2019, which is a continuation-in-part of U.S. patent application Ser. No. 15/206,195, titled "ACCURATE AND DETAILED MODELING OF SYSTEMS WITH LARGE COMPLEX DATA SETS USING A DISTRIBUTED SIMULATION ENGINE", filed on Jul. 8, 2016, which is continuation-in-part of U.S. patent application Ser. No. 15/186,453, titled "SYSTEM FOR AUTOMATED CAPTURE AND ANALYSIS OF BUSINESS INFORMATION FOR RELIABLE BUSINESS VENTURE OUTCOME PREDICTION", filed on Jun. 18, 2016, which is a continuation-in-part of U.S. patent application Ser. No. 15/166,158, titled "SYSTEM FOR AUTOMATED

CAPTURE AND ANALYSIS OF BUSINESS INFORMATION FOR SECURITY AND CLIENT-FACING INFRASTRUCTURE RELIABILITY", filed on May 26, 2016, which is a continuation-in-part of U.S. patent application Ser. No. 15/141,752, titled "SYSTEM FOR FULLY INTEGRATED CAPTURE, AND ANALYSIS OF BUSINESS INFORMATION RESULTING IN PREDICTIVE DECISION MAKING AND SIMULATION", filed on Apr. 28, 2016, now issued as 10,860,962 on Dec. 8, 2020, which is a continuation-in-part of U.S. patent application Ser. No. 15/091,563, titled "SYSTEM FOR CAPTURE, ANALYSIS AND STORAGE OF TIME SERIES DATA FROM SENSORS WITH HETEROGENEOUS REPORT INTERVAL PROFILES", filed on Apr. 5, 2016, now issued as U.S. Patent No. 10,204,147 on Feb. 12, 2019, and is also a continuation-in-part of U.S. patent application Ser. No. 14/986,536, titled "DISTRIBUTED SYSTEM FOR LARGE VOLUME DEEP WEB DATA EXTRACTION", filed on Dec. 31, 2015, now issued as U.S. Patent No. 10,210,255 on Feb. 19, 2019, and is also a continuation-in-part of U.S. patent application Ser. No. 14/925,974, titled "RAPID PREDICTIVE ANALYSIS OF VERY LARGE DATA SETS USING THE DISTRIBUTED COMPUTATIONAL GRAPH", filed on Oct. 28, 2015, the entire contents of all of which are incorporated herein by reference in their entirety.

BACKGROUND OF THE INVENTION

Field of the Invention

[0002] The disclosure relates to the field of network security, particularly to multi-factor user authentication.

Discussion of the State of the Art

[0003] Multi-factor authentication (MFA) is widely used today as an additional verification step often used in conjunction with a traditional login and password as a way to further secure a user's online accounts. MFA methods commonly used today includes one-time use codes sent to a user's mobile device or email, confirming through a uniquely generated link sent to the user, or using authenticator devices and apps that generate a code on-demand. However, the system is not without its faults. One such fault is over-reliance on a single method of delivery. For example, once a user's email is compromised, it may be trivial to gain access to that user's other accounts by simply requesting a password reset, which are usually conducted through the user's email.

One-time use codes, such as those from banking websites, are also often sent to the user's email address.

[0004] What is needed is a system that uses a combination of verification methods so that over-reliance on a single, and possibly compromised, method is eliminated. Such a system should be able to dynamically determine the varying amounts of verification needed, based on the context and risks associated with the connection.

SUMMARY OF THE INVENTION

[0005] Accordingly, the inventor has conceived, and reduced to practice, a system and method for contextual and risk-based multi-factor authentication.

[0006] In a typical embodiment, a server may be configured to dynamically determine a necessary verification score that must be obtained by a user before the user may access requested resources. The score may be based on context and risks associated with the connection request, such as, connection origin, how unusual the connection request is determined to be by the server, and the like. The user may then collect verification points via a plurality of verification methods to gain access.

[0007] According to one aspect of the invention, a system for contextual and risk-based multi-factor authentication is provided, comprising a multi-dimensional time series data server comprising a memory, a processor, and a plurality of programming instructions stored in the memory thereof and operable on the processor thereof, wherein the programmable instructions, when operating on the processor, cause the processor to monitor and record a network's traffic data, and serve the traffic data to other modules; and a directed computation graph module comprising a memory, a processor, and a plurality of programming instructions stored in the memory thereof and operable on the processor thereof, wherein the programmable instructions, when operating on the processor, cause the processor to receive traffic data from the multi-dimensional time series data server, determine a network traffic baseline from the traffic data, and determine a required verification score needed before granting access by a user to a network resource based at least in part by the network traffic baseline; wherein the user uses the plurality of verification methods to build up the required verification score in order to gain access to the network resource.

[0008] According to another embodiment, the verification score is based at least in part by a security-level associated with resources being accessed by the user. According to another embodiment, the verification score is based at least in part by the origin of the user's connection. According to another embodiment, at least a portion of the verification methods verifies visual media pertaining to the user. According to another embodiment, at least a portion of the verification methods checks and verifies biometric features of the user.

[0009] According to another embodiment, at least a portion of the verification methods used are based on information obtained from untrusted parties.

[0010] According to another embodiment, at least a portion of the verification methods used are based on information pertaining to the user's device.

[0011] According to another aspect of the invention, a method for contextual and risk-based multi-factor authentication is provided, comprising the steps of: (a) monitoring and recording a network's traffic data, with a multi-dimensional time series data server; (b) serving the traffic data to other modules, with the multi-dimensional time series data server; (c) receiving the traffic data from the multi-dimensional time series data server, with a directed computation graph module; (d) determining a network traffic baseline from the traffic data, with the directed computation graph module; (e) determining a required verification score needed before granting access by a user to network resource based at least in part by the network traffic baseline, with the directed computation graph module; and (f) requiring a user to use a plurality of verification methods to earn enough verification score in order to gain access to the network resource.

BRIEF DESCRIPTION OF THE DRAWING FIGURES

[0012] The accompanying drawings illustrate several aspects and, together with the description, serve to explain the principles of the invention according to the aspects. It will be appreciated by one skilled in the art that the particular arrangements illustrated in the drawings are merely exemplary, and are not to be considered as limiting of the scope of the invention or the claims herein in any way.

[0013] Fig. 1 is a diagram of an exemplary architecture of a business operating system according to an embodiment of the invention.

[0014] Fig. 2 is a flow diagram of an exemplary function of the business operating system in the detection and mitigation of predetermining factors leading to and steps to mitigate ongoing cyberattacks.

[0015] Fig. 3 is a process diagram showing business operating system functions in use to mitigate cyberattacks.

[0016] Fig. 4 is an illustration of an example architecture system used for contextual and risk-based multi-factor authentication as used in various embodiments of the present invention.

[0017] Fig. 5 is a sequence flow diagram summarizing one method for a user to connect to a server used in various embodiments of the invention.

[0018] Fig. 6 is a flow chart of an example method to grant user access to a network resource used in various embodiments of the invention.

[0019] Fig. 7 is a flow chart of an example method for increasing a user's verification score as used in various embodiments of the invention.

[0020] Fig. 8 is a block diagram illustrating an exemplary hardware architecture of a computing device used in various embodiments of the invention.

[0021] Fig. 9 is a block diagram illustrating an exemplary logical architecture for a client device, according to various embodiments of the invention.

[0022] Fig. 10 is a block diagram illustrating an exemplary architectural arrangement of clients, servers, and external services, according to various embodiments of the invention.

[0023] Fig. 11 is another block diagram illustrating an exemplary hardware architecture of a computing device used in various embodiments of the invention.

DETAILED DESCRIPTION OF THE INVENTION

[0024] The inventor has conceived, and reduced to practice, a system and method for contextual and risk-based multi-factor authentication.

[0025] One or more different aspects may be described in the present application. Further, for one or more of the aspects described herein, numerous alternative arrangements may be described; it should be appreciated that these are presented for illustrative purposes only and are not limiting of the aspects contained herein or the claims presented herein in any way. One or more of the arrangements may be widely applicable to numerous aspects, as may be readily apparent from the disclosure. In general, arrangements are described in sufficient detail to enable those skilled in the art to practice one or more of the aspects, and it should be appreciated that

other arrangements may be utilized and that structural, logical, software, electrical and other changes may be made without departing from the scope of the particular aspects. Particular features of one or more of the aspects described herein may be described with reference to one or more particular aspects or figures that form a part of the present disclosure, and in which are shown, by way of illustration, specific arrangements of one or more of the aspects. It should be appreciated, however, that such features are not limited to usage in the one or more particular aspects or figures with reference to which they are described. The present disclosure is neither a literal description of all arrangements of one or more of the aspects nor a listing of features of one or more of the aspects that must be present in all arrangements.

[0026] Headings of sections provided in this patent application and the title of this patent application are for convenience only, and are not to be taken as limiting the disclosure in any way.

[0027] Devices that are in communication with each other need not be in continuous communication with each other, unless expressly specified otherwise. In addition, devices that are in communication with each other may communicate directly or indirectly through one or more communication means or intermediaries, logical or physical.

[0028] A description of an aspect with several components in communication with each other does not imply that all such components are required. To the contrary, a variety of optional components may be described to illustrate a wide variety of possible aspects and in order to more fully illustrate one or more aspects. Similarly, although process steps, method steps, algorithms or the like may be described in a sequential order, such processes, methods and algorithms may generally be configured to work in alternate orders, unless specifically stated to the contrary. In other words, any sequence or order of steps that may be described in this patent application does not, in and of itself, indicate a requirement that the steps be performed in that order. The steps of described processes may be performed in any order practical. Further, some steps may be performed simultaneously despite being described or implied as occurring non-simultaneously (e.g., because one step is described after the other step). Moreover, the illustration of a process by its depiction in a drawing does not imply that the illustrated process is exclusive of other variations and modifications thereto, does not imply that the illustrated process or any of its steps are necessary to one or more of the aspects, and does not imply that the illustrated process is preferred. Also, steps are generally described once per aspect, but this does not mean they must

occur once, or that they may only occur once each time a process, method, or algorithm is carried out or executed. Some steps may be omitted in some aspects or some occurrences, or some steps may be executed more than once in a given aspect or occurrence.

[0029] When a single device or article is described herein, it will be readily apparent that more than one device or article may be used in place of a single device or article. Similarly, where more than one device or article is described herein, it will be readily apparent that a single device or article may be used in place of the more than one device or article.

[0030] The functionality or the features of a device may be alternatively embodied by one or more other devices that are not explicitly described as having such functionality or features. Thus, other aspects need not include the device itself.

[0031] Techniques and mechanisms described or referenced herein will sometimes be described in singular form for clarity. However, it should be appreciated that particular aspects may include multiple iterations of a technique or multiple instantiations of a mechanism unless noted otherwise. Process descriptions or blocks in figures should be understood as representing modules, segments, or portions of code which include one or more executable instructions for implementing specific logical functions or steps in the process. Alternate implementations are included within the scope of various aspects in which, for example, functions may be executed out of order from that shown or discussed, including substantially concurrently or in reverse order, depending on the functionality involved, as would be understood by those having ordinary skill in the art.

Conceptual Architecture

[0032] Fig. 1 is a diagram of an exemplary architecture of a business operating system **100** according to an embodiment of the invention. Client access to network resource or system **105** for specific data entry, system control and for interaction with system output such as automated predictive decision making and planning and alternate pathway simulations, occurs through the system's distributed, extensible high bandwidth cloud interface **110** which uses a versatile, robust web application driven interface for both input and display of client-facing information and a data store **112** such as, but not limited to MONGODB™, COUCHDB™, CASSANDRA™ or REDIS™ depending on the embodiment. Much of the business data analyzed by the system both from sources within the confines of the client business, and from cloud based sources **107**, public or proprietary such as, but not limited to: subscribed business field specific data services,

external remote sensors, subscribed satellite image and data feeds and web sites of interest to business operations both general and field specific, also enter the system through the cloud interface **110**, data being passed to the connector module **135** which may possess the API routines **135a** needed to accept and convert the external data and then pass the normalized information to other analysis and transformation components of the system, the directed computational graph module **155**, high volume web crawler module **115**, multidimensional time series database **120** and a graph stack service **145**. Directed computational graph module **155** retrieves one or more streams of data from a plurality of sources, which includes, but is not limited to, a plurality of physical sensors, network service providers, web based questionnaires and surveys, monitoring of electronic infrastructure, crowd sourcing campaigns, and human input device information. Within directed computational graph module **155**, data may be split into two identical streams in a specialized pre-programmed data pipeline **155a**, wherein one sub-stream may be sent for batch processing and storage while the other sub-stream may be reformatted for transformation pipeline analysis. The data may be then transferred to a general transformer service module **160** for linear data transformation as part of analysis or the decomposable transformer service module **150** for branching or iterative transformations that are part of analysis. Directed computational graph module **155** represents all data as directed graphs where the transformations are nodes and the result messages between transformations edges of the graph. High-volume web crawling module **115** may use multiple server hosted preprogrammed web spiders which, while autonomously configured, may be deployed within a web scraping framework **115a** of which SCRAPY™ is an example, to identify and retrieve data of interest from web based sources that are not well tagged by conventional web crawling technology. Multiple dimension time series data store module **120** may receive streaming data from a large plurality of sensors that may be of several different types. Multiple dimension time series data store module **120** may also store any time series data encountered by system **100** such as, but not limited to, environmental factors at insured client infrastructure sites, component sensor readings and system logs of some or all insured client equipment, weather and catastrophic event reports for regions an insured client occupies, political communiques and/or news from regions hosting insured client infrastructure and network service information captures (such as, but not limited to, news, capital funding opportunities and financial feeds, and sales, market condition), and service related customer data. Multiple dimension time series data store

module **120** may accommodate irregular and high-volume surges by dynamically allotting network bandwidth and server processing channels to process the incoming data. Inclusion of programming wrappers **120a** for languages—examples of which may include, but are not limited to, C++, PERL, PYTHON, and ERLANG™—allows sophisticated programming logic to be added to default functions of multidimensional time series database **120** without intimate knowledge of the core programming, greatly extending breadth of function. Data retrieved by multidimensional time series database **120** and high-volume web crawling module **115** may be further analyzed and transformed into task-optimized results by directed computational graph **155** and associated general transformer service **160** and decomposable transformer service **150** modules. Alternately, data from the multidimensional time series database and high-volume web crawling modules may be sent, often with scripted cuing information determining important vertices **145a**, to graph stack service module **145** which, employing standardized protocols for converting streams of information into graph representations of that data, for example open graph internet technology (although the invention is not reliant on any one standard). Through the steps, graph stack service module **145** represents data in graphical form influenced by any pre-determined scripted modifications **145a** and stores it in a graph-based data store **145b** such as GIRAPH™ or a key-value pair type data store REDIS™, or RIAK™, among others, any of which are suitable for storing graph-based information.

[0033] Results of the transformative analysis process may then be combined with further client directives, additional business rules and practices relevant to the analysis and situational information external to the data already available in automated planning service module **130**, which also runs powerful information theory-based predictive statistics functions and machine learning algorithms **130a** to allow future trends and outcomes to be rapidly forecast based upon the current system derived results and choosing each a plurality of possible business decisions. Then, using all or most available data, automated planning service module **130** may propose business decisions most likely to result in favorable business outcomes with a usably high level of certainty. Closely related to the automated planning service module **130** in the use of system-derived results in conjunction with possible externally supplied additional information in the assistance of end user business decision making, action outcome simulation module **125** with a discrete event simulator programming module **125a** coupled with an end user-facing observation and state estimation service **140**, which is highly scriptable **140b** as circumstances require and

has a game engine **140a** to more realistically stage possible outcomes of business decisions under consideration, allows business decision makers to investigate the probable outcomes of choosing one pending course of action over another based upon analysis of the current available data.

[0034] Fig. 2 is a flow diagram of an exemplary function **200** of the business operating system in the detection and mitigation of predetermining factors leading to and steps to mitigate ongoing cyberattacks. The system continuously retrieves network traffic data, at step **201**, which may be stored and preprocessed by the multidimensional time series data store **120** and its programming wrappers **120a**. All captured data are then analyzed to predict the normal usage patterns of network nodes such as internal users, network connected systems and equipment and sanctioned users external to the enterprise boundaries for example off-site employees, contractors and vendors, just to name a few likely participants. Of course, normal other network traffic may also be known to those skilled in the field, the list given is not meant to be exclusive and other possibilities would not fall outside the design of the invention. Analysis of network traffic may include graphical analysis of parameters such as network item to network usage using specifically developed programming in the graphstack service **145**, **145a**, analysis of usage by each network item may be accomplished by specifically predeveloped algorithms associated with the directed computational graph module **155**, general transformer service module **160** and decomposable service module **150**, depending on the complexity of the individual usage profile at step **201**. These usage pattern analyses, in conjunction with additional data concerning an enterprise's network topology; gateway firewall programming; internal firewall configuration; directory services protocols and configuration; and permissions profiles for both users and for access to network resources and/or sensitive information, just to list a few non-exclusive examples may then be analyzed further within the automated planning service module **130**, where machine learning techniques which include but are not limited to information theory statistics **130a** may be employed and the action outcome simulation module **125**, specialized for predictive simulation of outcome based on current data **125a** may be applied to formulate a current, up-to-date and continuously evolving baseline network usage profile at step **202**. This same data would be combined with up-to-date known cyberattack methodology reports, possibly retrieved from several divergent and exogenous sources through the use of the multi-application programming interface aware connector module **135** to present preventative recommendations to the enterprise decision makers for network infrastructure changes, physical and configuration-

based to cost effectively reduce the probability of a cyberattack and to significantly and most cost effectively mitigate data exposure and loss in the event of attack at steps **203** and **204**.

[0035] While some of these options may have been partially available as piecemeal solutions in the past, we believe the ability to intelligently integrate the large volume of data from a plurality of sources on an ongoing basis followed by predictive simulation and analysis of outcome based upon that current data such that actionable, business practice efficient recommendations can be presented is both novel and necessary in this field.

[0036] Once a comprehensive baseline profile of network usage using all available network traffic data has been formulated, the specifically tasked business operating system continuously polls the incoming traffic data for activities anomalous to that baseline as determined by pre-designated boundaries at step **205**. Examples of anomalous activities may include a user attempting to gain access several network resources such as workstations or servers in rapid succession, or a user attempting to gain access to a domain server of server with sensitive information using random userIDs or another user's userID and password, or attempts by any user to brute force crack a privileged user's password, or replay of recently issued ACTIVE DIRECTORY™/Kerberos ticket granting tickets, or the presence on any known, ongoing exploit on the network or the introduction of known malware to the network, just to name a very small sample of the cyberattack profiles known to those skilled in the field. The invention, being predictive as well as aware of known exploits is designed to analyze any anomalous network behavior, formulate probable outcomes of the behavior, and to then issue any needed alerts regardless of whether the attack follows a published exploit specification or exhibits novel characteristics deviant to normal network practice. Once a probable cyberattack is detected, the system then is designed to get needed information to responding parties at step **206**, and tailored, where possible, to each role in mitigating the attack and damage arising from it at step **207**. This may include the exact subset of information included in alerts and updates and the format in which the information is presented which may be through the enterprise's existing security information and event management system. Network administrators, then, might receive information such as but not limited to where on the network the attack is believed to have originated, what systems are believed currently affected, predictive information on where the attack may progress, what enterprise information is at risk and actionable recommendations on repelling the intrusion and mitigating the damage, whereas a chief information security officer

may receive alert including but not limited to a timeline of the cyberattack, the services and information believed compromised, what action, if any has been taken to mitigate the attack, a prediction of how the attack may unfold and the recommendations given to control and repel the attack at step **207**, although all parties may access any network resources and cyberattack information for which they have granted access at any time, unless compromise is suspected. Other specifically tailored updates may be issued by the system at steps **206** and **207**.

[0037] Fig. 3 is a process diagram showing business operating system functions **300** in use to mitigate cyberattacks. Input network data which may include network flow patterns **321**, the origin and destination of each piece of measurable network traffic **322**, system logs from servers and workstations on the network **323**, endpoint data **323a**, any security event log data from servers or available security information and event (SIEM) systems **324**, identity and assessment contexts **325**, external network health or cybersecurity feeds **326**, Kerberos domain controller or ACTIVE DIRECTORY™ server logs or instrumentation **327**, business unit performance related data **328**, and external threat intelligence feeds **329**, among many other possible data types for which the invention was designed to analyze and integrate, may pass into **315** the business operating system **310** for analysis as part of its cyber security function. These multiple types of data from a plurality of sources may be transformed for analysis **311**, **312** using at least one of the specialized cybersecurity, risk assessment or common functions of the business operating system in the role of cybersecurity system, such as, but not limited to network and system user privilege oversight **331**, network and system user behavior analytics **332**, attacker and defender action timeline **333**, SIEM integration and analysis **334**, dynamic benchmarking **335**, and incident identification and resolution performance analytics **336** among other possible cybersecurity functions; value at risk (VAR) modeling and simulation **341**, anticipatory vs. reactive cost estimations of different types of data breaches to establish priorities **342**, work factor analysis **343** and cyber event discovery rate **344** as part of the system's risk analytics capabilities; and the ability to format and deliver customized reports and dashboards **351**, perform generalized, ad hoc data analytics on demand **352**, continuously monitor, process and explore incoming data for subtle changes or diffuse informational threads **353** and generate cyber-physical systems graphing **354** as part of the business operating system's common capabilities. Output **317** can be used to configure network gateway security appliances **361**, to assist in preventing network intrusion through predictive change to infrastructure

recommendations **362**, to alert an enterprise of ongoing cyberattack early in the attack cycle, possibly thwarting it but at least mitigating the damage **362**, to record compliance to standardized guidelines or SLA requirements **363**, to continuously probe existing network infrastructure and issue alerts to any changes which may make a breach more likely **364**, suggest solutions to any domain controller ticketing weaknesses detected **365**, detect presence of malware **366**, and perform one time or continuous vulnerability scanning depending on client directives **367**. These examples are, of course, only a subset of the possible uses of the system, they are exemplary in nature and do not reflect any boundaries in the capabilities of the invention.

[0038] Along with the features discussed above, business operating system **100** functions may be configured to operate as a server that utilizes contextual and risk-based multi-factor authentication. **Fig. 4** is an illustration of an example architecture system **400** used for contextual and risk-based multi-factor authentication as used in various embodiments of the present invention. System **400** comprises a server **405**, a plurality of users **410[a-*n*]**, and a plurality of verification methods **415[a-g]**. Although, system **400** illustrates a direct connection between users and server, it should be understood that this is not indicative of a limitation of the system. Server **405** may be an authentication server for security device, such as a badge reader or biometric scanner or a security terminal, that may need to check a database on the server. Examples may include initiating a peer-to-peer connection, accessing a protected computer, gaining access to restricted physical locations, or the like. For simplicity, intermediate security devices are omitted in the examples used in the present disclosure.

[0039] In system **400**, users **410[a-*n*]**, connects to server **405**. In addition to a primary authentication method, such as a user identification and password, the user may be required to undergo additional verification. Server **405** may be configured to run business operating system **100**, and further configured to dynamically determine a required verification score based at least on the circumstances of the connection before granting access to the user. Circumstances that may affect the score may include, but is not limited to, origin of the user's connection, whether the access request is determined to be anomalous using the cybersecurity functions of business operating system **100**, accessing files or drives with a higher-level security assignment, and the like. Verification points may be obstained via one or more verification methods **415[a-g]**, which

may include, without limitation, sensors **415a**, trusted parties **415b**, untrusted parties **415c**, video or picture **415d**, network monitoring **415e**, device ID **415f**, and one-time-use codes **415g**.

[0040] To provide to some specific examples of the various verification methods, sensors **415a** may include biometrics scans, such as fingerprint scan, iris scan, facial recognition, and the like; voice recognition; and employee badge scanning using some near-field technology such as radio-frequency identification (RFID), or near field communication (NFC). Sensors may be sensors built into a user's mobile device, or it may be installed semi-permanently at a secure location, for example, at a security desk at an office.

[0041] Trusted parties **415b** may include a user's co-worker or security personnel that may have received a request by server **405** during the additional verification step to verify whether the user requesting access is actually the user, and not a malicious party. For example, a user may request access from a server, and once the server requires additional verification it may send an alert to a random co-worker in the proximity of the user. The co-worker may verify, for example, with their own badge scanner or biometric scanner, or taking and submitting a photograph or video.

[0042] Untrusted parties **415c** may be verification via a third party not normally associated with the user. For example, the third party may be a member of a rewards program incentivizing submission of pictures, posting comments, or the like at the request of the server. The rewards program may additionally be disguised so that it may appear as a simple activity the third party may participate in to earn rewards without overtly making it a means of verifying the user. For example, the rewards program may be disguised as an augmented reality game that requests players to submitting pictures and videos, or commenting on their surroundings to earn points. Penalties may also be implemented to deter wrongful verification by untrusted parties.

[0043] Video or picture **415d** may include videos or pictures taken with the camera on a laptop, desktop computer, or mobile device; cameras installed at secure locations at an office; video or pictures taken by an autonomous drone sent by the server; or the like.

[0044] Network monitoring **415e** may be passive verification by the server based on information regarding the connection requesting access, and analyzed using the cybersecurity functions of business operating system **100**. Such information may include, for instance, access or traffic compared to a pre-established network baseline, origin of the user connection, time of access request, and the like. For example, a user connecting from within an office, perhaps determined through determining the IP address of the user, during normal work hours may be provided more

verification points during verification than a user who is connecting using an airport's Wi-Fi network during odd hours.

[0045] Device ID **415f** may be another passive verification by the server that takes into account the user's connecting device, such as, a MAC address, or a device fingerprint generated by the server based on the hardware and software configuration of the user's device.

[0046] One-time-use codes **415g** may be uniquely generated codes that are sent to the user through a text message or email, or generated on-demand on the user's mobile device. The code may also take the form of a uniquely generated hyperlink that the user may simply click on to verify. Various implementations of the one-time-use code are presently used in the art.

[0047] The various verification methods may be configured so that each method may grant different amounts of verification points based on metrics defined by the user, such as how secure the method is. For example, a badge reader at an office that has a security personnel keeping watch may grant the user more points than a fingerprint scan on a mobile device.

[0048] **Fig. 5** is a sequence flow diagram summarizing one method **500** for a user to connect to a server used in various embodiments of the invention. For the purposes of this sequence flow diagram, it will be presumed that the user is successfully verified at all authentication and verification steps. At an initial step **505**, a user requests access from a server. The server may prompt the user for some initial form of authentication, such as a login and password. At step **510**, the server dynamically determines a verification score required for the user to be granted access. At step **515**, the server may request that the user use a plurality of verification methods to reach the verification score needed before access is granted. The various verification methods are discussed above in system **400**. Depending on the verification method used, the method may be initiated by either the user or the server. Once verification is successful, the user is granted access by the server at step **520**. In some embodiments, instead of using points, the system may be configured to require a certain number of verification methods to be used, or requiring a particular verification method to be used in conjunction with a number of other verification methods. Other embodiments may use a combination of the points-based system, and the method-count system.

Detailed Description of Exemplary Aspects

[0049] **Fig. 6** is a flow chart of an example method **600** to grant user access to a server used in various embodiments of the invention. At an initial step **603**, a user requests access from a server.

At step **606**, the server requests login credentials from the user. At step **609**, if the credential check fails, the connection is terminated at step **612**. The server may be configured to institute a certain lockout period after a set number of failed attempts. If the login is successful at step **609**, the server dynamically determines a required verification score required before the user can access the server at step **615**. The score may be based on, for example, origin of the user connection, whether the connection is determined to be anomalous, security-level of the resource or resources requested by the user, and the like. Other criteria may be found discussed above. At step **618**, a plurality of verification methods may be used to verify the user, which may be initiated by either the user or the server, depending on the method used. If the verification is unsuccessful at step **621**, the user's connection is terminated at step **612**. The verification may fail, for example, if a preset timeout period has been exceeded, or the server has determined that the user attempting to access the server is actually a malicious party. A lockout period may also be instituted here that may take affect after a preset number of attempts. If the verification is successful at step **621**, the user is granted access at step **624**.

[0050] Fig. 7 is a flow chart of an example method **700** for increasing a user's verification score as used in various embodiments of the invention. Method **700** may be viewed as a more in-depth description of steps **615, 618,** and **624** from method **600**. At an initial step **703**, the server dynamically determines a required verification score before the user may access the server. As mentioned above, the amount of score required may be based on such metrics as origin of the user's connection, whether the access request is determined to be anomalous by the server based on a predetermined network baseline, accessing files or drives with a higher-level security assignment, and the like. Other metrics are discussed above. At step **706**, the server may request additional verification from the user. At step **709**, a plurality of verification methods may be initiated by the user, such as, biometric scan on the user's device, employee badge scan, voice recognition, or the like. At step **712**, a plurality of verification methods may be initiated by the server, such as, requesting confirmation from trusted and untrusted parties, sending a drone for visual confirmation, analyzing the user's connection and devices, and the like. Steps **709** and **712** may be executed in parallel, or one of the steps may not be executed at all, depending on the situation. At step **715**, the system does a check to see whether the user has collected enough verification points. If not, the flow chart loops back to execute steps **709** and/or **712** again. If the score has reached the required level, the user is granted access at step **718**.

[0051] For brevity, method **700** does not include a fail step for during verification of the user, but it should be understood that various methods may be instituted that may cause the user to fail the verification check, and, thusly, denied access. For example, if a video or picture submitted during the verification process that shows that an unknown party is attempting to masquerade as another user, the verification check may fail immediately. Another method, for example, may be to institute a timeout period to give the user a limited amount of time to earn enough verification points.

Hardware Architecture

[0052] Generally, the techniques disclosed herein may be implemented on hardware or a combination of software and hardware. For example, they may be implemented in an operating system kernel, in a separate user process, in a library package bound into network applications, on a specially constructed machine, on an application-specific integrated circuit (ASIC), or on a network interface card.

[0053] Software/hardware hybrid implementations of at least some of the aspects disclosed herein may be implemented on a programmable network-resident machine (which should be understood to include intermittently connected network-aware machines) selectively activated or reconfigured by a computer program stored in memory. Such network devices may have multiple network interfaces that may be configured or designed to utilize different types of network communication protocols. A general architecture for some of these machines may be described herein in order to illustrate one or more exemplary means by which a given unit of functionality may be implemented. According to specific aspects, at least some of the features or functionalities of the various aspects disclosed herein may be implemented on one or more general-purpose computers associated with one or more networks, such as for example an end-user computer system, a client computer, a network server or other server system, a mobile computing device (e.g., tablet computing device, mobile phone, smartphone, laptop, or other appropriate computing device), a consumer electronic device, a music player, or any other suitable electronic device, router, switch, or other suitable device, or any combination thereof. In at least some aspects, at least some of the features or functionalities of the various aspects disclosed herein may be implemented in one or more virtualized computing environments (e.g., network computing clouds, virtual machines hosted on one or more physical computing machines, or other appropriate virtual environments).

[0054] Referring now to **Fig. 8**, there is shown a block diagram depicting an exemplary computing device **10** suitable for implementing at least a portion of the features or functionalities disclosed herein. Computing device **10** may be, for example, any one of the computing machines listed in the previous paragraph, or indeed any other electronic device capable of executing software- or hardware-based instructions according to one or more programs stored in memory. Computing device **10** may be configured to communicate with a plurality of other computing devices, such as clients or servers, over communications networks such as a wide area network a metropolitan area network, a local area network, a wireless network, the Internet, or any other network, using known protocols for such communication, whether wireless or wired.

[0055] In one aspect, computing device **10** includes one or more central processing units (CPU) **12**, one or more interfaces **15**, and one or more busses **14** (such as a peripheral component interconnect (PCI) bus). When acting under the control of appropriate software or firmware, CPU **12** may be responsible for implementing specific functions associated with the functions of a specifically configured computing device or machine. For example, in at least one aspect, a computing device **10** may be configured or designed to function as a server system utilizing CPU **12**, local memory **11** and/or remote memory **16**, and interface(s) **15**. In at least one aspect, CPU **12** may be caused to perform one or more of the different types of functions and/or operations under the control of software modules or components, which for example, may include an operating system and any appropriate applications software, drivers, and the like.

[0056] CPU **12** may include one or more processors **13** such as, for example, a processor from one of the Intel, ARM, Qualcomm, and AMD families of microprocessors. In some aspects, processors **13** may include specially designed hardware such as application-specific integrated circuits (ASICs), electrically erasable programmable read-only memories (EEPROMs), field-programmable gate arrays (FPGAs), and so forth, for controlling operations of computing device **10**. In a particular aspect, a local memory **11** (such as non-volatile random access memory (RAM) and/or read-only memory (ROM), including for example one or more levels of cached memory) may also form part of CPU **12**. However, there are many different ways in which memory may be coupled to system **10**. Memory **11** may be used for a variety of purposes such as, for example, caching and/or storing data, programming instructions, and the like. It should be further appreciated that CPU **12** may be one of a variety of system-on-a-chip (SOC) type hardware that may include additional hardware such as memory or graphics processing chips,

such as a QUALCOMM SNAPDRAGON™ or SAMSUNG EXYNOS™ CPU as are becoming increasingly common in the art, such as for use in mobile devices or integrated devices.

[0057] As used herein, the term "processor" is not limited merely to those integrated circuits referred to in the art as a processor, a mobile processor, or a microprocessor, but broadly refers to a microcontroller, a microcomputer, a programmable logic controller, an application-specific integrated circuit, and any other programmable circuit.

[0058] In one aspect, interfaces **15** are provided as network interface cards (NICs). Generally, NICs control the sending and receiving of data packets over a computer network; other types of interfaces **15** may for example support other peripherals used with computing device **10**. Among the interfaces that may be provided are Ethernet interfaces, frame relay interfaces, cable interfaces, DSL interfaces, token ring interfaces, graphics interfaces, and the like. In addition, various types of interfaces may be provided such as, for example, universal serial bus (USB), Serial, Ethernet, FIREWIRE™, THUNDERBOLT™, PCI, parallel, radio frequency (RF), BLUETOOTH™, near-field communications (e.g., using near-field magnetics), 802.11 (WiFi), frame relay, TCP/IP, ISDN, fast Ethernet interfaces, Gigabit Ethernet interfaces, Serial ATA (SATA) or external SATA (ESATA) interfaces, high-definition multimedia interface (HDMI), digital visual interface (DVI), analog or digital audio interfaces, asynchronous transfer mode (ATM) interfaces, high-speed serial interface (HSSI) interfaces, Point of Sale (POS) interfaces, fiber data distributed interfaces (FDDIs), and the like. Generally, such interfaces **15** may include physical ports appropriate for communication with appropriate media. In some cases, they may also include an independent processor (such as a dedicated audio or video processor, as is common in the art for high-fidelity A/V hardware interfaces) and, in some instances, volatile and/or non-volatile memory (e.g., RAM).

[0059] Although the system shown in **Fig. 8** illustrates one specific architecture for a computing device **10** for implementing one or more of the aspects described herein, it is by no means the only device architecture on which at least a portion of the features and techniques described herein may be implemented. For example, architectures having one or any number of processors **13** may be used, and such processors **13** may be present in a single device or distributed among any number of devices. In one aspect, a single processor **13** handles communications as well as routing computations, while in other aspects a separate dedicated communications processor may be provided. In various aspects, different types of features or functionalities may be implemented

in a system according to the aspect that includes a client device (such as a tablet device or smartphone running client software) and server systems (such as a server system described in more detail below).

[0060] Regardless of network device configuration, the system of an aspect may employ one or more memories or memory modules (such as, for example, remote memory block **16** and local memory **11**) configured to store data, program instructions for the general-purpose network operations, or other information relating to the functionality of the aspects described herein (or any combinations of the above). Program instructions may control execution of or comprise an operating system and/or one or more applications, for example. Memory **16** or memories **11**, **16** may also be configured to store data structures, configuration data, encryption data, historical system operations information, or any other specific or generic non-program information described herein.

[0061] Because such information and program instructions may be employed to implement one or more systems or methods described herein, at least some network device aspects may include nontransitory machine-readable storage media, which, for example, may be configured or designed to store program instructions, state information, and the like for performing various operations described herein. Examples of such nontransitory machine-readable storage media include, but are not limited to, magnetic media such as hard disks, floppy disks, and magnetic tape; optical media such as CD-ROM disks; magneto-optical media such as optical disks, and hardware devices that are specially configured to store and perform program instructions, such as read-only memory devices (ROM), flash memory (as is common in mobile devices and integrated systems), solid state drives (SSD) and “hybrid SSD” storage drives that may combine physical components of solid state and hard disk drives in a single hardware device (as are becoming increasingly common in the art with regard to personal computers), memristor memory, random access memory (RAM), and the like. It should be appreciated that such storage means may be integral and non-removable (such as RAM hardware modules that may be soldered onto a motherboard or otherwise integrated into an electronic device), or they may be removable such as swappable flash memory modules (such as “thumb drives” or other removable media designed for rapidly exchanging physical storage devices), “hot-swappable” hard disk drives or solid state drives, removable optical storage discs, or other such removable media, and that such integral and removable storage media may be utilized interchangeably.

Examples of program instructions include both object code, such as may be produced by a compiler, machine code, such as may be produced by an assembler or a linker, byte code, such as may be generated by for example a JAVA™ compiler and may be executed using a Java virtual machine or equivalent, or files containing higher level code that may be executed by the computer using an interpreter (for example, scripts written in Python, Perl, Ruby, Groovy, or any other scripting language).

[0062] In some aspects, systems may be implemented on a standalone computing system. Referring now to Fig. **9**, there is shown a block diagram depicting a typical exemplary architecture of one or more aspects or components thereof on a standalone computing system. Computing device **20** includes processors **21** that may run software that carry out one or more functions or applications of aspects, such as for example a client application **24**. Processors **21** may carry out computing instructions under control of an operating system **22** such as, for example, a version of MICROSOFT WINDOWS™ operating system, APPLE macOS™ or iOS™ operating systems, some variety of the Linux operating system, ANDROID™ operating system, or the like. In many cases, one or more shared services **23** may be operable in system **20**, and may be useful for providing common services to client applications **24**. Services **23** may for example be WINDOWS™ services, user-space common services in a Linux environment, or any other type of common service architecture used with operating system **21**. Input devices **28** may be of any type suitable for receiving user input, including for example a keyboard, touchscreen, microphone (for example, for voice input), mouse, touchpad, trackball, or any combination thereof. Output devices **27** may be of any type suitable for providing output to one or more users, whether remote or local to system **20**, and may include for example one or more screens for visual output, speakers, printers, or any combination thereof. Memory **25** may be random-access memory having any structure and architecture known in the art, for use by processors **21**, for example to run software. Storage devices **26** may be any magnetic, optical, mechanical, memristor, or electrical storage device for storage of data in digital form (such as those described above, referring to **Fig. 8**). Examples of storage devices **26** include flash memory, magnetic hard drive, CD-ROM, and/or the like.

[0063] In some aspects, systems may be implemented on a distributed computing network, such as one having any number of clients and/or servers. Referring now to **Fig. 10**, there is shown a block diagram depicting an exemplary architecture **30** for implementing at least a portion of a

system according to one aspect on a distributed computing network. According to the aspect, any number of clients **33** may be provided. Each client **33** may run software for implementing client-side portions of a system; clients may comprise a system **20** such as that illustrated in **Fig. 9**. In addition, any number of servers **32** may be provided for handling requests received from one or more clients **33**. Clients **33** and servers **32** may communicate with one another via one or more electronic networks **31**, which may be in various aspects any of the Internet, a wide area network, a mobile telephony network (such as CDMA or GSM cellular networks), a wireless network (such as WiFi, WiMAX, LTE, and so forth), or a local area network (or indeed any network topology known in the art; the aspect does not prefer any one network topology over any other). Networks **31** may be implemented using any known network protocols, including for example wired and/or wireless protocols.

[0064] In addition, in some aspects, servers **32** may call external services **37** when needed to obtain additional information, or to refer to additional data concerning a particular call. Communications with external services **37** may take place, for example, via one or more networks **31**. In various aspects, external services **37** may comprise web-enabled services or functionality related to or installed on the hardware device itself. For example, in one aspect where client applications **24** are implemented on a smartphone or other electronic device, client applications **24** may obtain information stored in a server system **32** in the cloud or on an external service **37** deployed on one or more of a particular enterprise's or user's premises.

[0065] In some aspects, clients **33** or servers **32** (or both) may make use of one or more specialized services or appliances that may be deployed locally or remotely across one or more networks **31**. For example, one or more databases **34** may be used or referred to by one or more aspects. It should be understood by one having ordinary skill in the art that databases **34** may be arranged in a wide variety of architectures and using a wide variety of data access and manipulation means. For example, in various aspects one or more databases **34** may comprise a relational database system using a structured query language (SQL), while others may comprise an alternative data storage technology such as those referred to in the art as "NoSQL" (for example, HADOOP CASSANDRA™, GOOGLE BIGTABLE™, and so forth). In some aspects, variant database architectures such as column-oriented databases, in-memory databases, clustered databases, distributed databases, or even flat file data repositories may be used according to the aspect. It will be appreciated by one having ordinary skill in the art that any

combination of known or future database technologies may be used as appropriate, unless a specific database technology or a specific arrangement of components is specified for a particular aspect described herein. Moreover, it should be appreciated that the term “database” as used herein may refer to a physical database machine, a cluster of machines acting as a single database system, or a logical database within an overall database management system. Unless a specific meaning is specified for a given use of the term “database”, it should be construed to mean any of these senses of the word, all of which are understood as a plain meaning of the term “database” by those having ordinary skill in the art.

[0066] Similarly, some aspects may make use of one or more security systems **36** and configuration systems **35**. Security and configuration management are common information technology (IT) and web functions, and some amount of each are generally associated with any IT or web systems. It should be understood by one having ordinary skill in the art that any configuration or security subsystems known in the art now or in the future may be used in conjunction with aspects without limitation, unless a specific security **36** or configuration system **35** or approach is specifically required by the description of any specific aspect.

[0067] Fig. 11 shows an exemplary overview of a computer system **40** as may be used in any of the various locations throughout the system. It is exemplary of any computer that may execute code to process data. Various modifications and changes may be made to computer system **40** without departing from the broader scope of the system and method disclosed herein. Central processor unit (CPU) **41** is connected to bus **42**, to which bus is also connected memory **43**, nonvolatile memory **44**, display **47**, input/output (I/O) unit **48**, and network interface card (NIC) **53**. I/O unit **48** may, typically, be connected to keyboard **49**, pointing device **50**, hard disk **52**, and real-time clock **51**. NIC **53** connects to network **54**, which may be the Internet or a local network, which local network may or may not have connections to the Internet. Also shown as part of system **40** is power supply unit **45** connected, in this example, to a main alternating current (AC) supply **46**. Not shown are batteries that could be present, and many other devices and modifications that are well known but are not applicable to the specific novel functions of the current system and method disclosed herein. It should be appreciated that some or all components illustrated may be combined, such as in various integrated applications, for example Qualcomm or Samsung system-on-a-chip (SOC) devices, or whenever it may be appropriate to combine multiple capabilities or functions into a single hardware device (for instance, in mobile

devices such as smartphones, video game consoles, in-vehicle computer systems such as navigation or multimedia systems in automobiles, or other integrated hardware devices).

[0068] In various aspects, functionality for implementing systems or methods of various aspects may be distributed among any number of client and/or server components. For example, various software modules may be implemented for performing various functions in connection with the system of any particular aspect, and such modules may be variously implemented to run on server and/or client components.

[0069] The skilled person will be aware of a range of possible modifications of the various aspects described above. Accordingly, the present invention is defined by the claims and their equivalents.

[0070] Where a method is claimed below, the steps of the method are intended to be construed without any order unless it is impossible to perform a given step before another.

What is claimed is:

1. A computer system comprising a memory, wherein the computer system is configured to execute software instructions stored on nontransitory machine-readable storage media that:

receive a request to authenticate a client, wherein the request comprises a first identifier and a password,

store, in a multidimensional time-series database, information about the request,

determine whether the password corresponds to a first user account identified by the first identifier,

determine whether the request to authenticate the client requires additional verification,

wherein determining whether the request to authenticate the client requires additional verification comprises:

retrieving, from the multidimensional time-series database, historical information about previous access requests associated with the first user account, and

determining, based at least on the historical information, whether the first user account is associated with a previous request to authenticate, wherein the previous request to authenticate comprised a second identifier not associated with the first user account; and,

if the request to authenticate the client is determined to require additional verification,

select an additional verification method from a plurality of verification methods,

cause the client to be prompted to complete the additional verification method, and

determine whether the additional verification method has been completed correctly.

2. The computer system of claim 1, wherein determining whether the request to authenticate the client requires additional verification further comprises processing endpoint data from entities connected to the network.

3. The computer system of claim 1, wherein determining whether the request to authenticate the client requires additional verification further comprises processing an external threat intelligence feed.

4. The computer system of claim 1, wherein the second identifier is associated with a second user account, and wherein the second user account is different from the first user account.

5. The computer system of claim 1, further configured to execute software instructions stored on nontransitory machine-readable storage media that:

if the request to authenticate the client is determined to require additional verification,

determine that a probable cyberattack is detected, and

provide an alert,

wherein the alert includes the first identifier and an indicator that a probable cyberattack is detected, and

wherein the alert is designated to be provided to an administrator of the network.

6. The computer system of claim 5, wherein the alert further includes an indication of where the probable cyberattack may have originated.

7. The computer system of claim 5, wherein the alert further includes an indication of what enterprise information may be at risk in the probable cyberattack.

8. The computer system of claim 5, wherein the alert further includes predictive information.

9. A method implemented on a computer system connected to a network, the method comprising:

receiving a request to authenticate a client, wherein the request comprises a first identifier and a password,

storing, in a multidimensional time-series database, information about the request,

determining whether the password corresponds to a first user account identified by the first identifier,

determining whether the request to authenticate the client requires additional verification,

wherein determining whether the request to authenticate the client requires additional verification comprises:

retrieving, from the multidimensional time-series database, historical information about previous access requests associated with the first user account,

determining, based at least on the historical information, whether the first user account is associated with a previous request to authenticate, wherein the previous request to authenticate comprised a second identifier not associated with the first user account; and,

if the request to authenticate the client is determined to require additional verification, selecting an additional verification method from a plurality of verification methods, causing the client to be prompted to complete the additional verification method, and determining whether the additional verification method has been completed correctly.

10. The method of claim 9, wherein determining whether the request to authenticate the client requires additional verification further comprises processing endpoint data from entities connected to the network.

11. The method of claim 9, wherein determining whether the request to authenticate the client requires additional verification further comprises processing an external threat intelligence feed.

12. The method of claim 9, wherein the second identifier is associated with a second user account, and wherein the second user account is different from the first user account.

13. The method of claim 9, further comprising:

if the request to authenticate the client is determined to require additional verification, determining that a probable cyberattack is detected, and

delivering an alert,

wherein the alert includes the first identifier and an indicator that a probable cyberattack is detected, and

wherein the alert is designated to be delivered to an administrator of the network.

14. The method of claim 13, wherein the alert further includes an indication of where the probable cyberattack may have originated.

15. The method of claim 13, wherein the alert further includes an indication of what enterprise information may be at risk in the probable cyberattack.

16. The method of claim 13, wherein the alert further includes predictive information.

17. The method of claim 12, further comprising:

if the request to authenticate the client is determined to require additional verification,

determining that a probable cyberattack is detected, and

delivering an alert,

wherein the alert includes the first identifier and an indicator that a probable cyberattack is detected, and

wherein the alert is designated to be delivered to an administrator of the network.

18. The method of claim 17, wherein the alert further includes predictive information.

19. A computer system comprising a memory, wherein the computer system is configured to execute software instructions stored on nontransitory machine-readable storage media that:

receive a request to authenticate a client, wherein the request comprises a first identifier and a password,

store, in a multidimensional time-series database, information about the request,

determine whether the password corresponds to a user account identified by the first identifier,

determine whether the request to authenticate the client requires additional verification,

wherein determining whether the request to authenticate the client requires additional verification comprises:

retrieving, from the multidimensional time-series database, historical information about previous access requests associated with the user account,

determining, based at least on the historical information, whether the user account is associated with a plurality of previous requests to authenticate, wherein the plurality of previous requests to authenticate comprises at least one second identifier not associated with any user account; and,

if the request to authenticate the client is determined to require additional verification,

select an additional verification method from a plurality of verification methods,

cause the client to be prompted to complete the additional verification method, and

determine whether the additional verification method has been completed correctly.

20. The computer system of claim 19, wherein determining whether the request to authenticate the client requires additional verification further comprises processing endpoint data from entities connected to the network.

21. The computer system of claim 19 wherein determining whether the request to authenticate the client requires additional verification further comprises processing an external threat intelligence feed.

22. The computer system of claim 19, wherein selecting an additional verification method from a plurality of verification methods comprises processing at least a portion of the plurality of previous requests to authenticate.

23. The computer system of claim 19, further configured to execute software instructions stored on nontransitory machine-readable storage media that:

if the request to authenticate the client is determined to require additional verification,

determine that a probable cyberattack is detected, and

provide an alert,

wherein the alert includes the first identifier and an indicator that a probable cyberattack is detected, and

wherein the alert is designated to be provided to an administrator of the network.

24. The computer system of claim 23, wherein the alert further includes an indication of where the probable cyberattack may have originated.

25. The computer system of claim 23, wherein the alert further includes an indication of what enterprise information may be at risk in the probable cyberattack.

26. A method implemented on a computer system connected to a network, the method comprising:

receiving a request to authenticate a client, wherein the request comprises a first identifier and a password,

storing, in a multidimensional time-series database, information about the request,

determining whether the password corresponds to a user account identified by the first identifier,

determining whether the request to authenticate the client requires additional verification,

wherein determining whether the request to authenticate the client requires additional verification comprises:

retrieving, from the multidimensional time-series database, historical information about previous access requests associated with the user account,

determining, based at least on the historical information, whether the user account is associated with a plurality of previous requests to authenticate, wherein the plurality of previous requests to authenticate comprises at least one second identifier not associated with any user account; and

if the request to authenticate the client is determined to require additional verification,

selecting an additional verification method from a plurality of verification methods,

causing the client to be prompted to complete the additional verification method, and

determining whether the additional verification method has been completed correctly.

27. The method of claim 26, wherein determining whether the request to authenticate the client requires additional verification further comprises processing endpoint data from entities connected to the network.

28. The method of claim 26, wherein determining whether the request to authenticate the client requires additional verification further comprises processing an external threat intelligence feed.

29. The method of claim 26, wherein selecting an additional verification method from a plurality of verification methods comprises processing at least a portion of the plurality of previous requests to authenticate.

30. The method of claim 29 further comprising:

if the request to authenticate the client is determined to require additional verification,

determining that a probable cyberattack is detected, and

delivering an alert,

wherein the alert includes the first identifier and an indicator that a probable cyberattack is detected, and

wherein the alert is designated to be delivered to an administrator of the network.

ABSTRACT

A system for contextual and risk-based multi-factor authentication having a multi-dimensional time series data server configured to monitor and record a network's traffic data and to serve the traffic data to other modules and a directed computation graph module configured to receive network traffic data from the multi-dimensional time series data server, determine a network traffic baseline from the network traffic data, and determine a verification score needed before granting access based at least in part by the network traffic baseline. A plurality of verification methods build up a user's verification score to required level to gain access.

PTO/AIA/01 (06-12)
Approved for use through 01/31/2014. OMB 0651-0032
U.S. Patent and Trademark Office; U.S. DEPARTMENT OF COMMERCE
Under the Paperwork Reduction Act of 1995, no persons are required to respond to a collection of information unless it displays a valid OMB control number.

DECLARATION (37 CFR 1.63) FOR UTILITY OR DESIGN APPLICATION USING AN APPLICATION DATA SHEET (37 CFR 1.76)

Title of Invention	CONTEXTUAL AND RISK-BASED MULTI-FACTOR AUTHENTICATION

As the below named inventor, I hereby declare that:

This declaration is directed to:

- [x] The attached application, or
- [ ] United States application or PCT international application number _____

filed on _____.

The above-identified application was made or authorized to be made by me.

I believe that I am the original inventor or an original joint inventor of a claimed invention in the application.

I hereby acknowledge that any willful false statement made in this declaration is punishable under 18 U.S.C. 1001 by fine or imprisonment of not more than five (5) years, or both.

WARNING:

Petitioner/applicant is cautioned to avoid submitting personal information in documents filed in a patent application that may contribute to identity theft. Personal information such as social security numbers, bank account numbers, or credit card numbers (other than a check or credit card authorization form PTO-2038 submitted for payment purposes) is never required by the USPTO to support a petition or an application. If this type of personal information is included in documents submitted to the USPTO, petitioners/applicants should consider redacting such personal information from the documents before submitting them to the USPTO. Petitioner/applicant is advised that the record of a patent application is available to the public after publication of the application (unless a non-publication request in compliance with 37 CFR 1.213(a) is made in the application) or issuance of a patent. Furthermore, the record from an abandoned application may also be available to the public if the application is referenced in a published application or an issued patent (see 37 CFR 1.14). Checks and credit card authorization forms PTO-2038 submitted for payment purposes are not retained in the application file and therefore are not publicly available.

LEGAL NAME OF INVENTOR

Inventor: Ian MacLeod Date (Optional) :_____

Signature: I MacL

Note: An application data sheet (PTO/SB/14 or equivalent), including naming the entire inventive entity, must accompany this form or must have been previously filed. Use an additional PTO/AIA/01 form for each additional inventor.

This collection of information is required by 35 U.S.C. 115 and 37 CFR 1.63. The information is required to obtain or retain a benefit by the public which is to file (and by the USPTO to process) an application. Confidentiality is governed by 35 U.S.C. 122 and 37 CFR 1.11 and 1.14. This collection is estimated to take 1 minute to complete, including gathering, preparing, and submitting the completed application form to the USPTO. Time will vary depending upon the individual case. Any comments on the amount of time you require to complete this form and/or suggestions for reducing this burden, should be sent to the Chief Information Officer, U.S. Patent and Trademark Office, U.S. Department of Commerce, P.O. Box 1450, Alexandria, VA 22313-1450. DO NOT SEND FEES OR COMPLETED FORMS TO THIS ADDRESS. **SEND TO: Commissioner for Patents, P.O. Box 1450, Alexandria, VA 22313-1450.**

If you need assistance in completing the form, call 1-800-PTO-9199 and select option 2.

CERTIFICATION AND REQUEST FOR PRIORITIZED EXAMINATION UNDER 37 CFR 1.102(e) (Page 1 of 1)

First Named Inventor:	Jason Crabtree	Nonprovisional Application Number (if known):	
Title of Invention:	CONTEXTUAL AND RISK-BASED MULTI-FACTOR AUTHENTICATION		

APPLICANT HEREBY CERTIFIES THE FOLLOWING AND REQUESTS PRIORITIZED EXAMINATION FOR THE ABOVE-IDENTIFIED APPLICATION.

1. The processing fee set forth in 37 CFR 1.17(i)(1) and the prioritized examination fee set forth in 37 CFR 1.17(c) have been filed with the request. The publication fee requirement is met because that fee, set forth in 37 CFR 1.18(d), is currently $0. The basic filing fee, search fee, and examination fee are filed with the request or have been already been paid. I understand that any required excess claims fees or application size fee must be paid for the application.

2. I understand that the application may not contain, or be amended to contain, more than four independent claims, more than thirty total claims, or any multiple dependent claims, and that any request for an extension of time will cause an outstanding Track I request to be dismissed.

3. The applicable box is checked below:

I. ☑ Original Application (Track One) - Prioritized Examination under § 1.102(e)(1)

i. (a) The application is an original nonprovisional utility application filed under 35 U.S.C. 111(a). This certification and request is being filed with the utility application via EFS-Web.

---OR---

(b) The application is an original nonprovisional plant application filed under 35 U.S.C. 111(a). This certification and request is being filed with the plant application in paper.

ii. An executed inventor's oath or declaration under 37 CFR 1.63 or 37 CFR 1.64 for each inventor, **or** the application data sheet meeting the conditions specified in 37 CFR 1.53(f)(3)(i) is filed with the application.

II. ☐ Request for Continued Examination - Prioritized Examination under § 1.102(e)(2)

i. A request for continued examination has been filed with, or prior to, this form.
ii. If the application is a utility application, this certification and request is being filed via EFS-Web.
iii. The application is an original nonprovisional utility application filed under 35 U.S.C. 111(a), or is a national stage entry under 35 U.S.C. 371.
iv. This certification and request is being filed prior to the mailing of a first Office action responsive to the request for continued examination.
v. No prior request for continued examination has been granted prioritized examination status under 37 CFR 1.102(e)(2).

Signature /BRIAN R. GALVIN/	Date September 13, 2024
Name (Print/Typed) Brian R. Galvin	Practitioner Registration Number 50966

Note: *This form must be signed in accordance with 37 CFR 1.33. See 37 CFR 1.4(d) for signature requirements and certifications. Submit multiple forms if more than one signature is required.**

☑ *Total of 1 forms are submitted.

Privacy Act Statement

The **Privacy Act of 1974 (P.L. 93-579)** requires that you be given certain information in connection with your submission of the attached form related to a patent application or patent. Accordingly, pursuant to the requirements of the Act, please be advised that: (1) the general authority for the collection of this information is 35 U.S.C. 2(b)(2); (2) furnishing of the information solicited is voluntary; and (3) the principal purpose for which the information is used by the U.S. Patent and Trademark Office is to process and/or examine your submission related to a patent application or patent. If you do not furnish the requested information, the U.S. Patent and Trademark Office may not be able to process and/or examine your submission, which may result in termination of proceedings or abandonment of the application or expiration of the patent.

The information provided by you in this form will be subject to the following routine uses:

1. The information on this form will be treated confidentially to the extent allowed under the Freedom of Information Act (5 U.S.C. 552) and the Privacy Act (5 U.S.C 552a). Records from this system of records may be disclosed to the Department of Justice to determine whether disclosure of these records is required by the Freedom of Information Act.
2. A record from this system of records may be disclosed, as a routine use, in the course of presenting evidence to a court, magistrate, or administrative tribunal, including disclosures to opposing counsel in the course of settlement negotiations.
3. A record in this system of records may be disclosed, as a routine use, to a Member of Congress submitting a request involving an individual, to whom the record pertains, when the individual has requested assistance from the Member with respect to the subject matter of the record.
4. A record in this system of records may be disclosed, as a routine use, to a contractor of the Agency having need for the information in order to perform a contract. Recipients of information shall be required to comply with the requirements of the Privacy Act of 1974, as amended, pursuant to 5 U.S.C. 552a(m).
5. A record related to an International Application filed under the Patent Cooperation Treaty in this system of records may be disclosed, as a routine use, to the International Bureau of the World Intellectual Property Organization, pursuant to the Patent Cooperation Treaty.
6. A record in this system of records may be disclosed, as a routine use, to another federal agency for purposes of National Security review (35 U.S.C. 181) and for review pursuant to the Atomic Energy Act (42 U.S.C. 218(c)).
7. A record from this system of records may be disclosed, as a routine use, to the Administrator, General Services, or his/her designee, during an inspection of records conducted by GSA as part of that agency's responsibility to recommend improvements in records management practices and programs, under authority of 44 U.S.C. 2904 and 2906. Such disclosure shall be made in accordance with the GSA regulations governing inspection of records for this purpose, and any other relevant (*i.e.*, GSA or Commerce) directive. Such disclosure shall not be used to make determinations about individuals.
8. A record from this system of records may be disclosed, as a routine use, to the public after either publication of the application pursuant to 35 U.S.C. 122(b) or issuance of a patent pursuant to 35 U.S.C. 151. Further, a record may be disclosed, subject to the limitations of 37 CFR 1.14, as a routine use, to the public if the record was filed in an application which became abandoned or in which the proceedings were terminated and which application is referenced by either a published application, an application open to public inspection or an issued patent.
9. A record from this system of records may be disclosed, as a routine use, to a Federal, State, or local law enforcement agency, if the USPTO becomes aware of a violation or potential violation of law or regulation.

Fig. 1

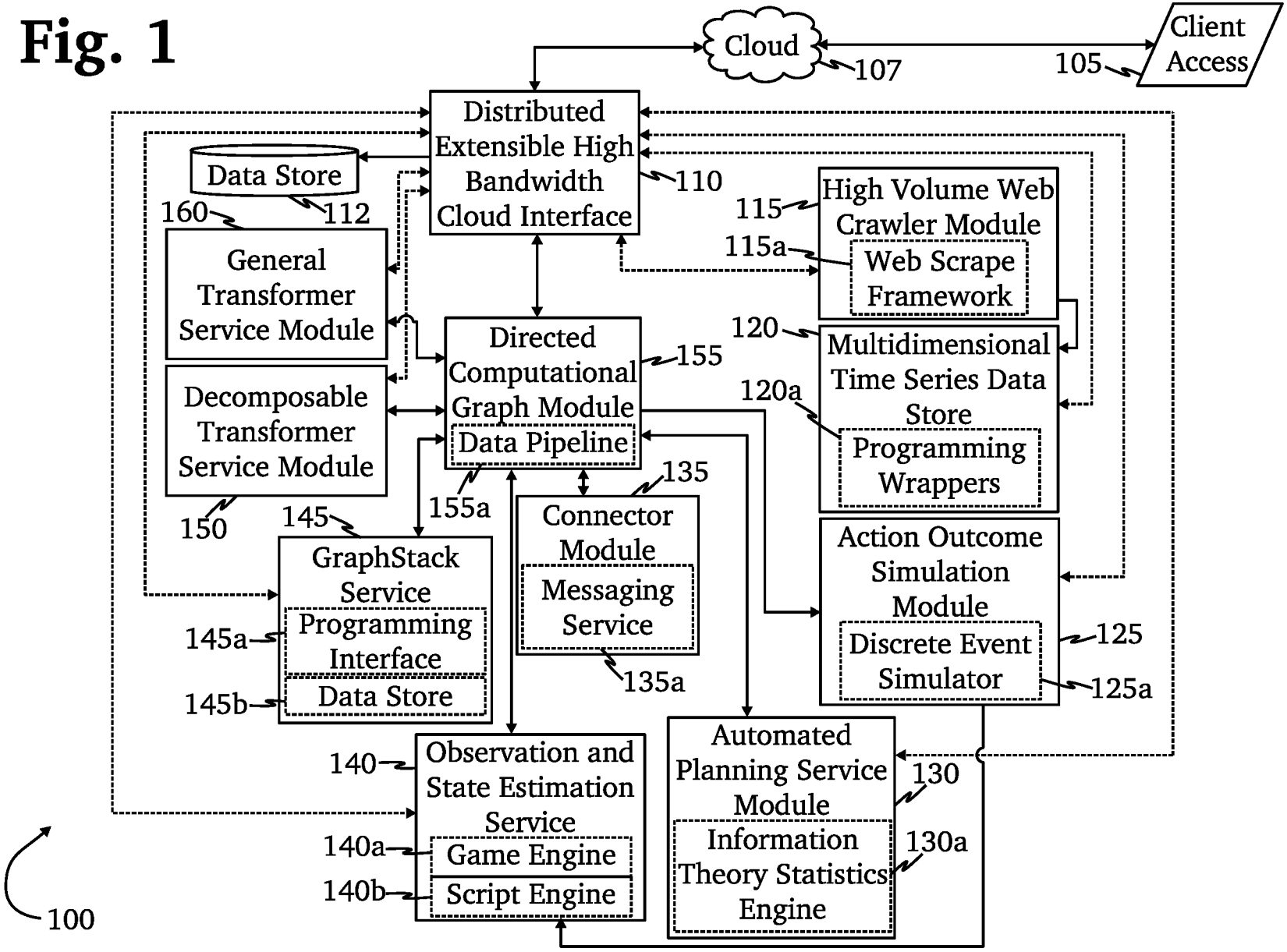
Cloud
107
Client Access
105
Distributed Extensible High Bandwidth Cloud Interface
110
Data Store
112
160
General Transformer Service Module
Decomposable Transformer Service Module
150
Directed Computational Graph Module
155
Data Pipeline
155a
High Volume Web Crawler Module
115
115a
Web Scrape Framework
120
Multidimensional Time Series Data Store
120a
Programming Wrappers
135
Connector Module
Messaging Service
135a
145
GraphStack Service
145a
Programming Interface
145b
Data Store
Action Outcome Simulation Module
125
Discrete Event Simulator
125a
140
Observation and State Estimation Service
140a
Game Engine
140b
Script Engine
Automated Planning Service Module
130
Information Theory Statistics Engine
130a
100

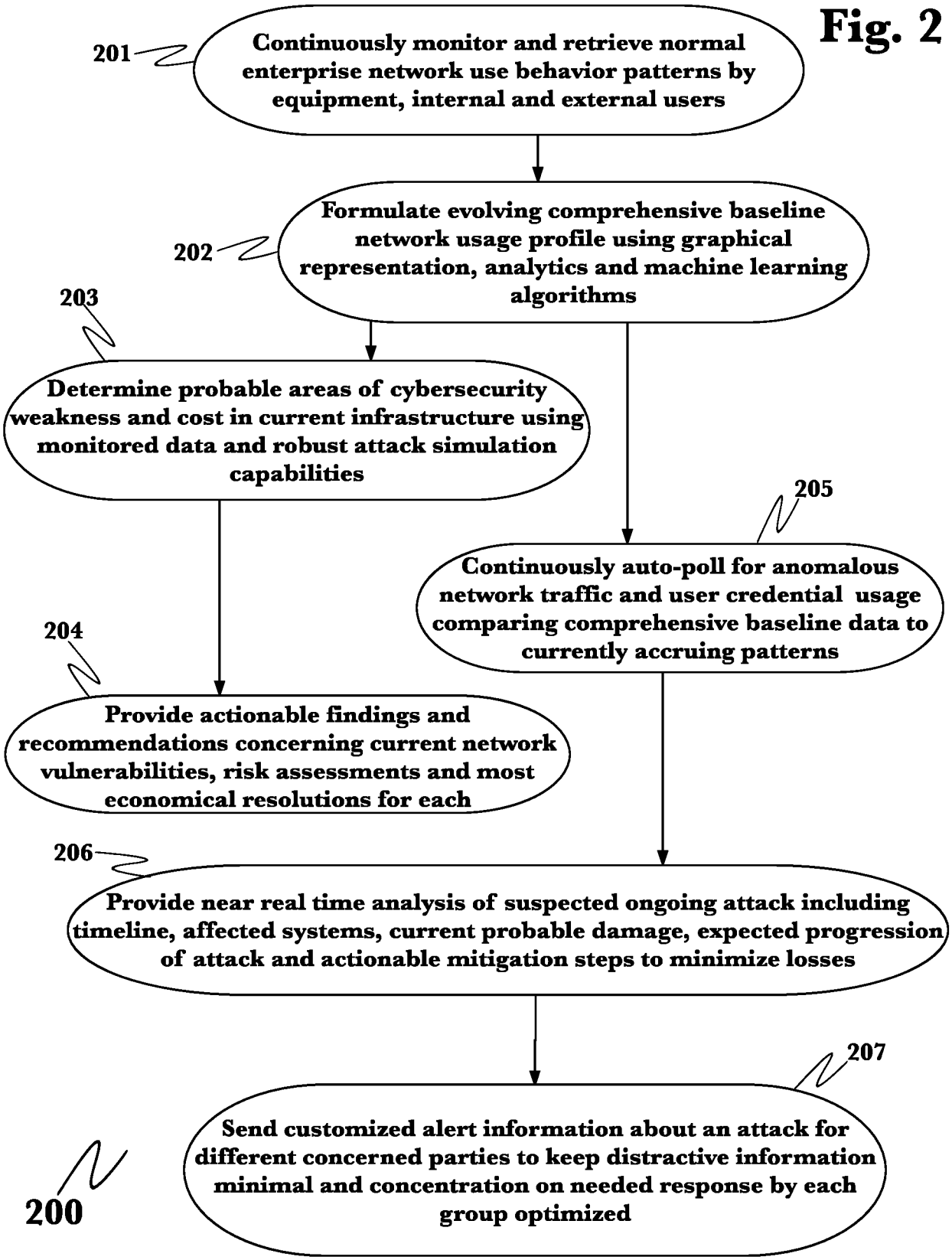
Fig. 2
201
Continuously monitor and retrieve normal enterprise network use behavior patterns by equipment, internal and external users
202
Formulate evolving comprehensive baseline network usage profile using graphical representation, analytics and machine learning algorithms
203
Determine probable areas of cybersecurity weakness and cost in current infrastructure using monitored data and robust attack simulation capabilities
205
Continuously auto-poll for anomalous network traffic and user credential usage comparing comprehensive baseline data to currently accruing patterns
204
Provide actionable findings and recommendations concerning current network vulnerabilities, risk assessments and most economical resolutions for each
206
Provide near real time analysis of suspected ongoing attack including timeline, affected systems, current probable damage, expected progression of attack and actionable mitigation steps to minimize losses
207
Send customized alert information about an attack for different concerned parties to keep distractive information minimal and concentration on needed response by each group optimized
200

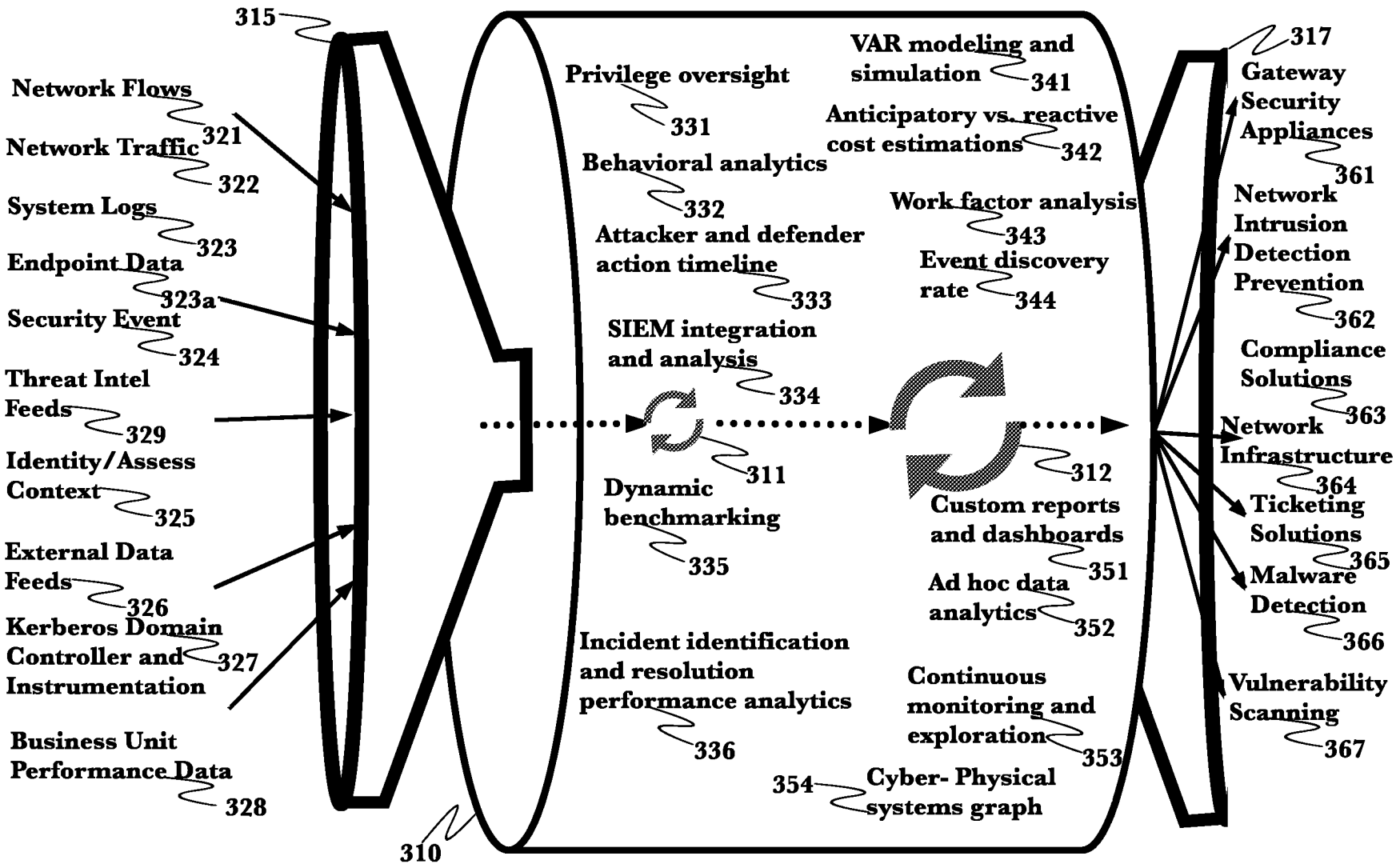
315
Network Flows
321
Network Traffic
322
System Logs
323
Endpoint Data
323a
Security Event
324
Threat Intel Feeds
329
Identity/Assess Context
325
External Data Feeds
326
Kerberos Domain Controller and Instrumentation
327
Business Unit Performance Data
328
310
Privilege oversight
331
Behavioral analytics
332
Attacker and defender action timeline
333
SIEM integration and analysis
334
311
Dynamic benchmarking
335
Incident identification and resolution performance analytics
336
VAR modeling and simulation
341
Anticipatory vs. reactive cost estimations
342
Work factor analysis
343
Event discovery rate
344
312
Custom reports and dashboards
351
Ad hoc data analytics
352
Continuous monitoring and exploration
353
354
Cyber- Physical systems graph
317
Gateway Security Appliances
361
Network Intrusion Detection Prevention
362
Compliance Solutions
363
Network Infrastructure
364
Ticketing Solutions
365
Malware Detection
366
Vulnerability Scanning
367

Fig. 3

300

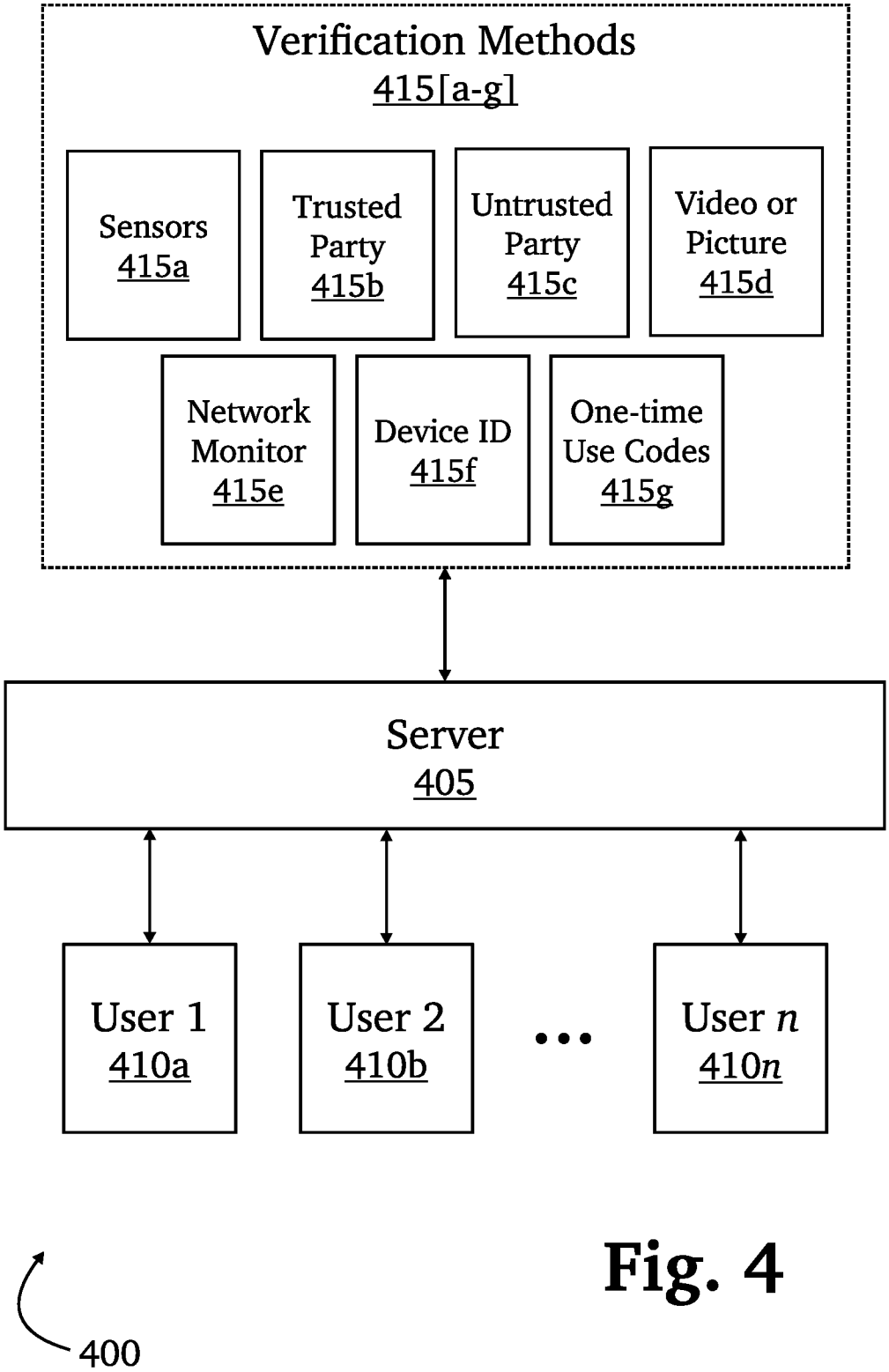
Verification Methods
415[a-g]
Sensors
415a
Trusted Party
415b
Untrusted Party
415c
Video or Picture
415d
Network Monitor
415e
Device ID
415f
One-time Use Codes
415g
Server
405
User 1
410a
User 2
410b
...
User n
410n
400

Fig. 4

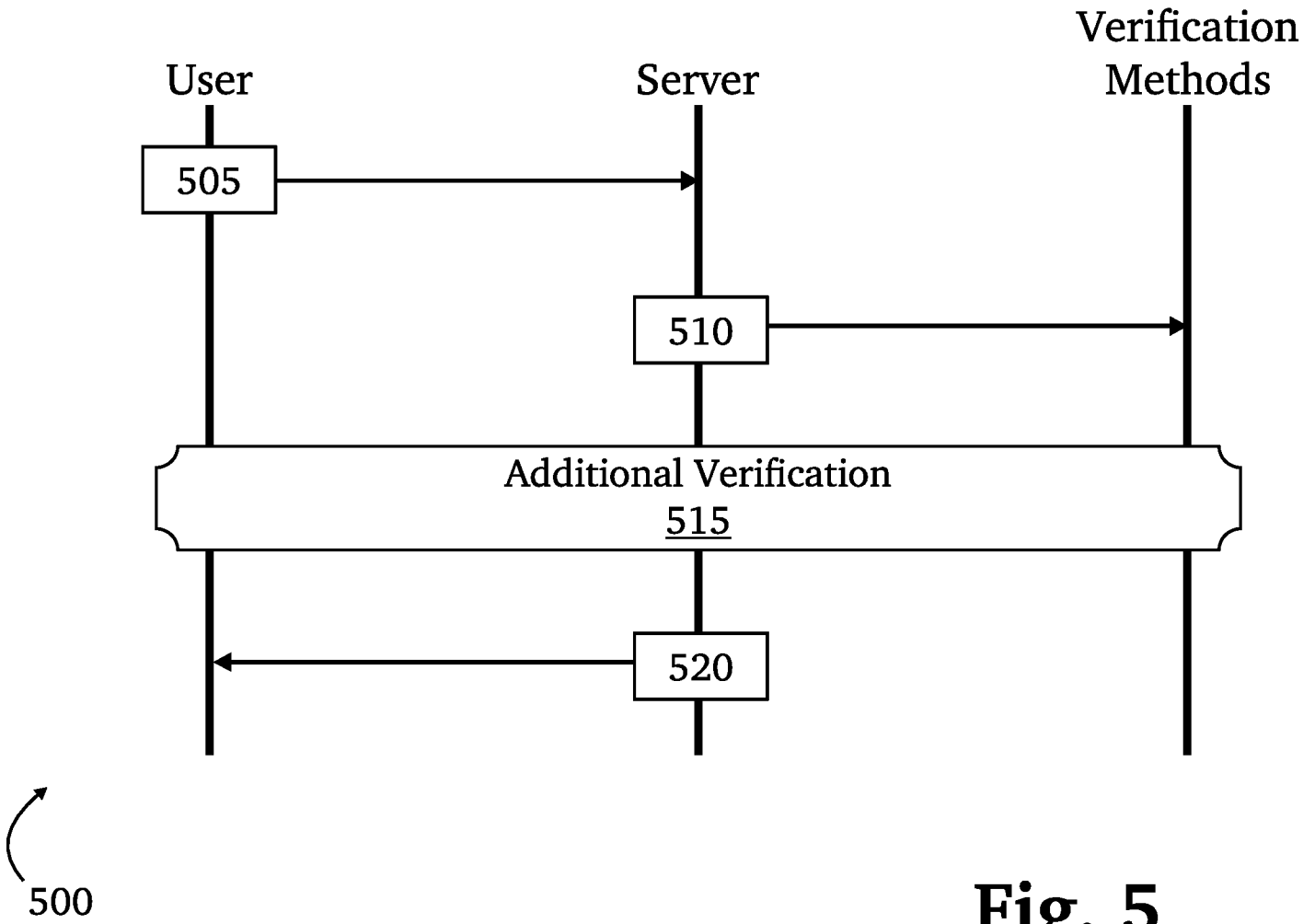
User
Server
Verification Methods
505
510
Additional Verification
515
520
500

Fig. 5

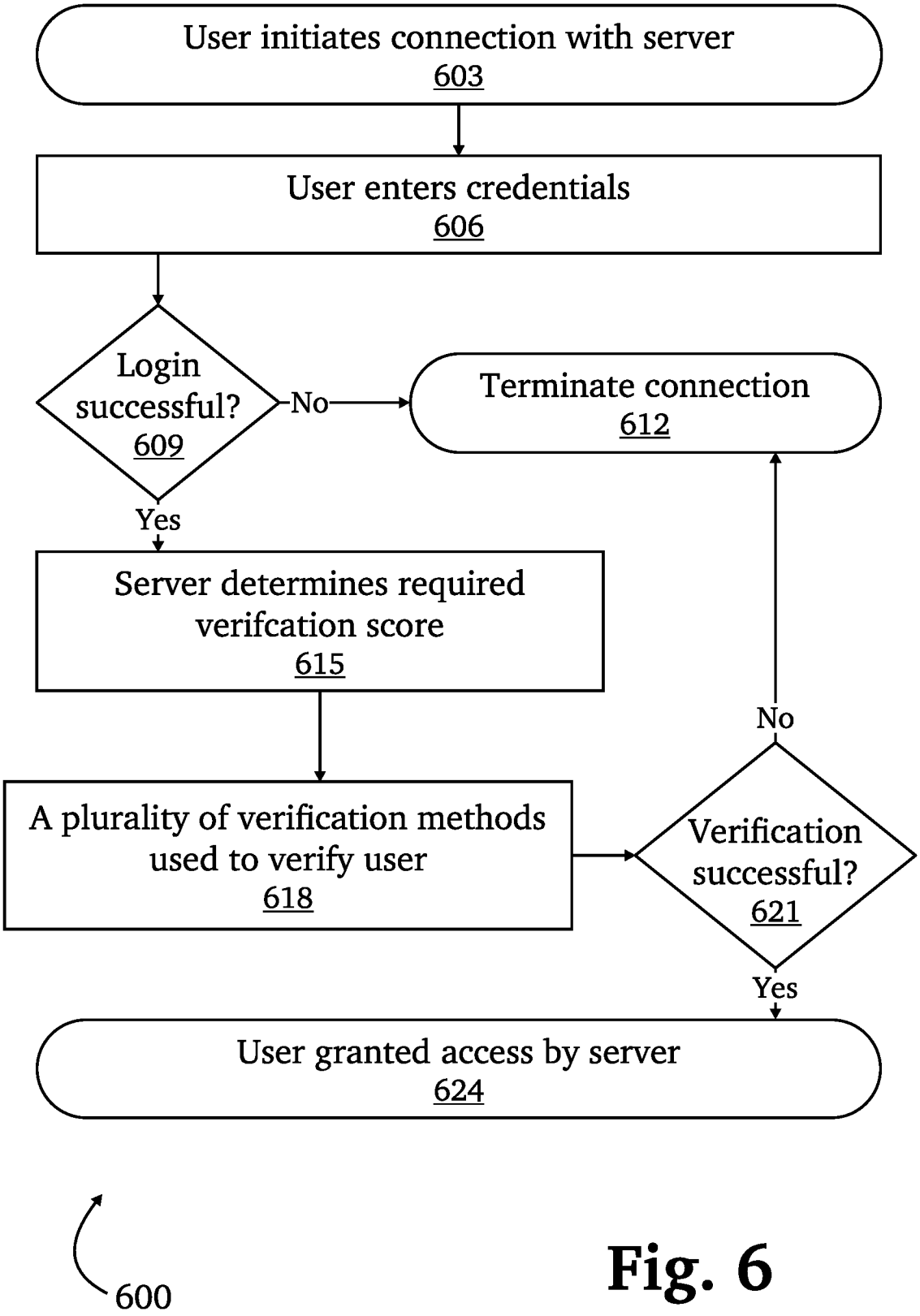
User initiates connection with server
603
User enters credentials
606
Login successful?
609
No
Terminate connection
612
Yes
Server determines required verifcation score
615
A plurality of verification methods used to verify user
618
Verification successful?
621
No
Yes
User granted access by server
624
600

Fig. 6

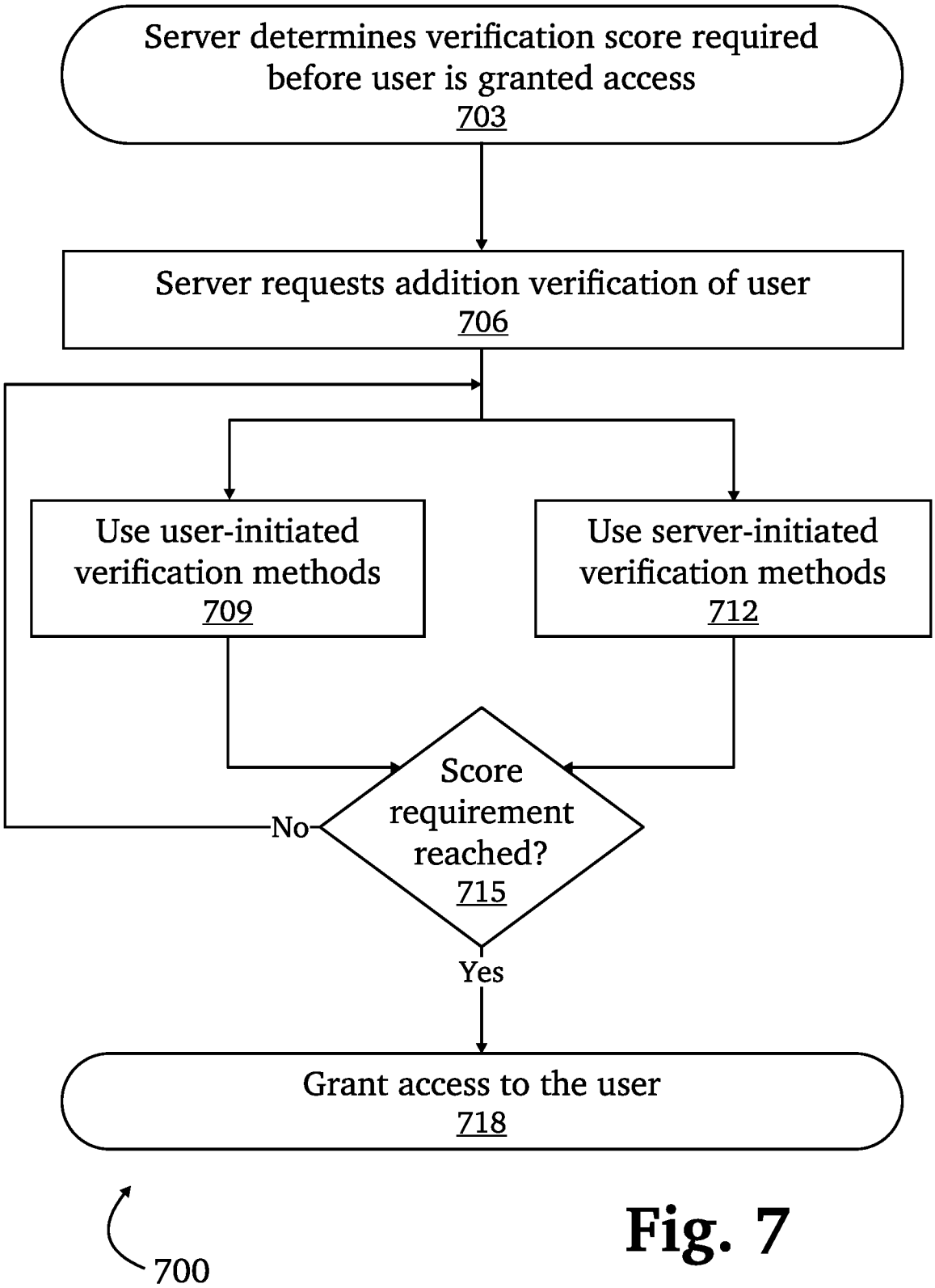
Server determines verification score required before user is granted access
703
Server requests addition verification of user
706
Use user-initiated verification methods
709
Use server-initiated verification methods
712
Score requirement reached?
715
No
Yes
Grant access to the user
718
700

Fig. 7

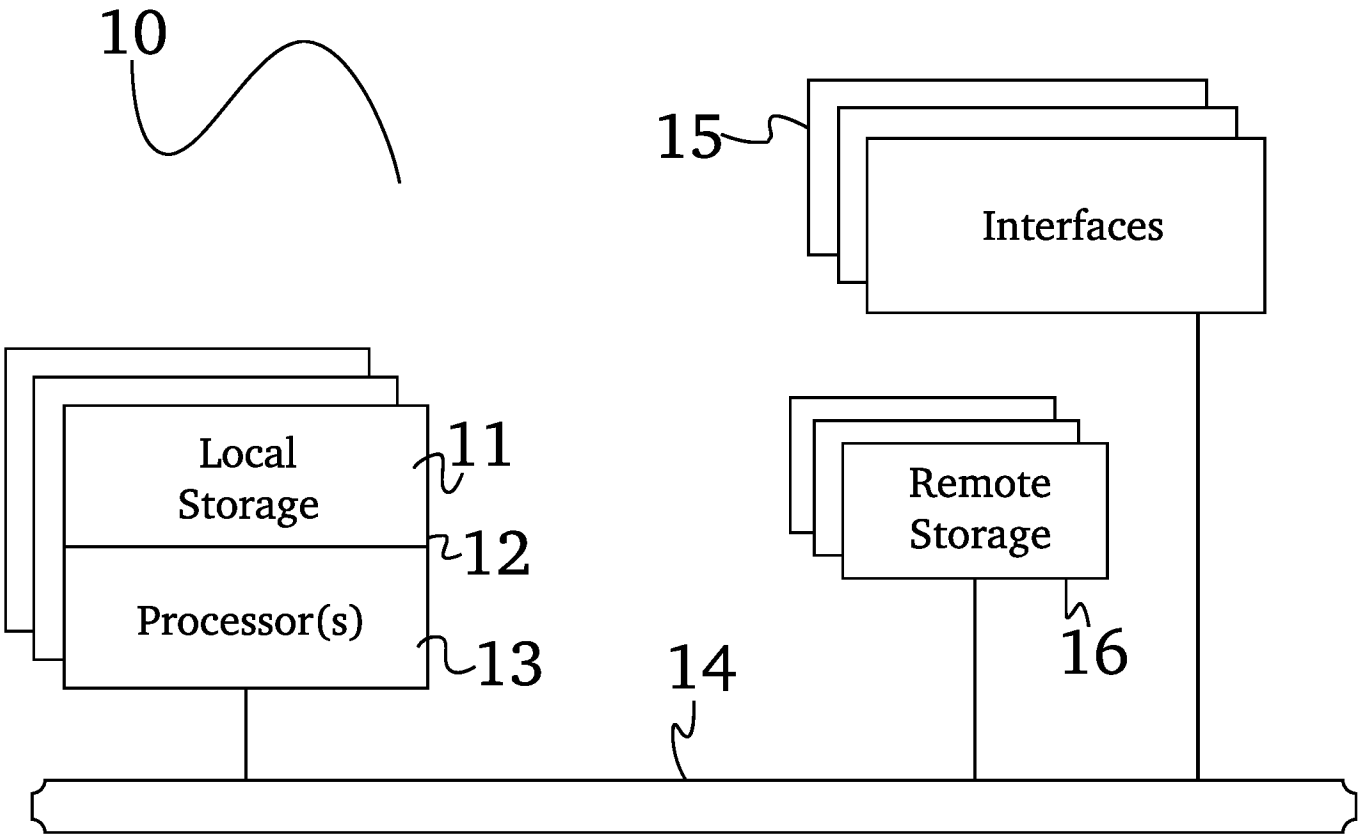
10
15
Interfaces
Local
Storage
11
12
Processor(s)
13
Remote
Storage
16
14

Fig. 8

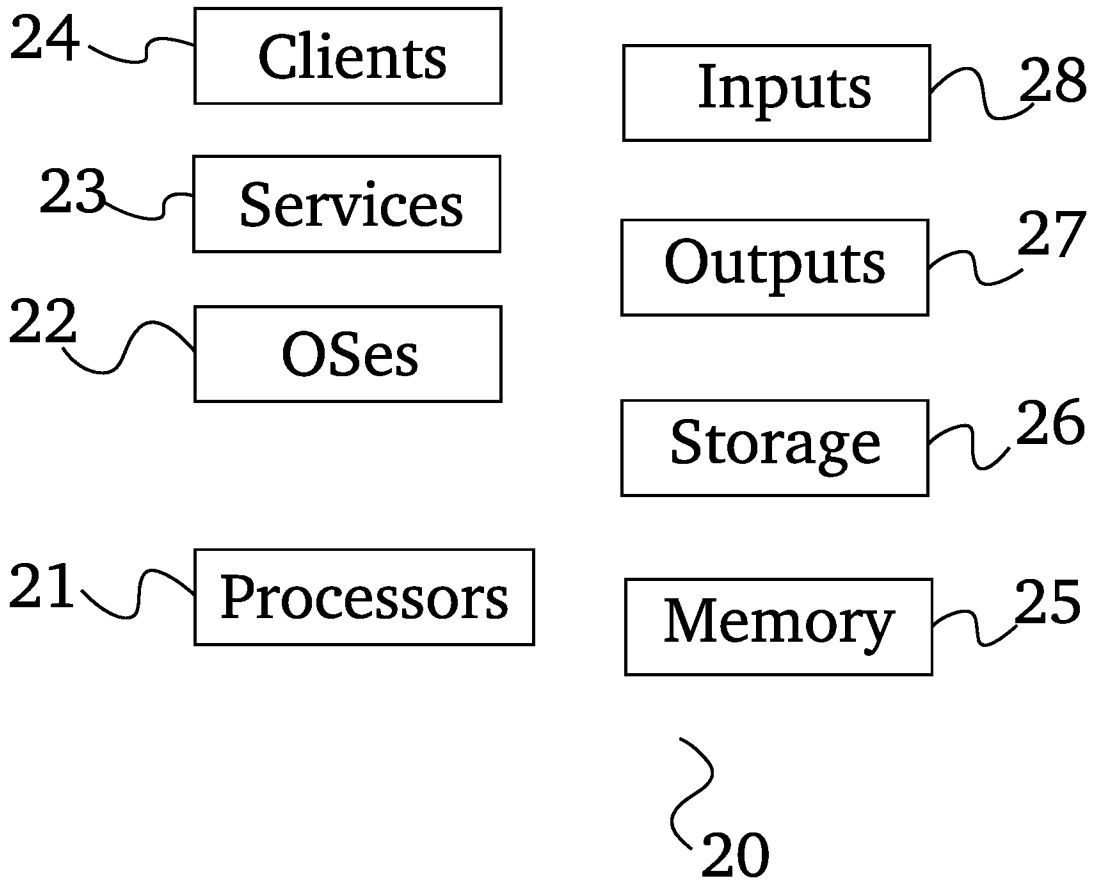
24
Clients
23
Services
22
OSes
21
Processors
Inputs
28
Outputs
27
Storage
26
Memory
25
20

Fig. 9

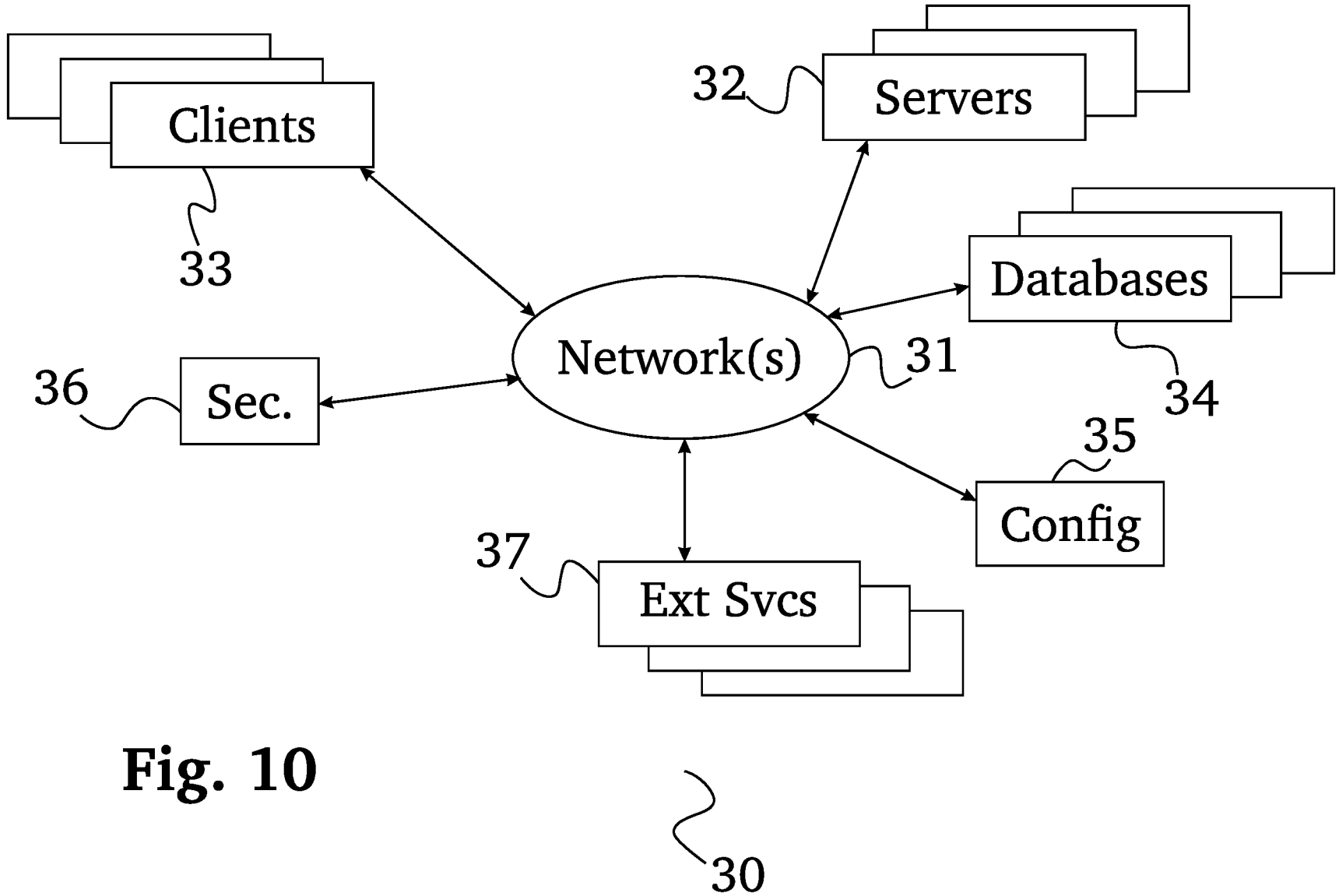
Clients
33
32
Servers
Databases
34
Network(s)
31
36
Sec.
35
Config
37
Ext Svcs
30

Fig. 10

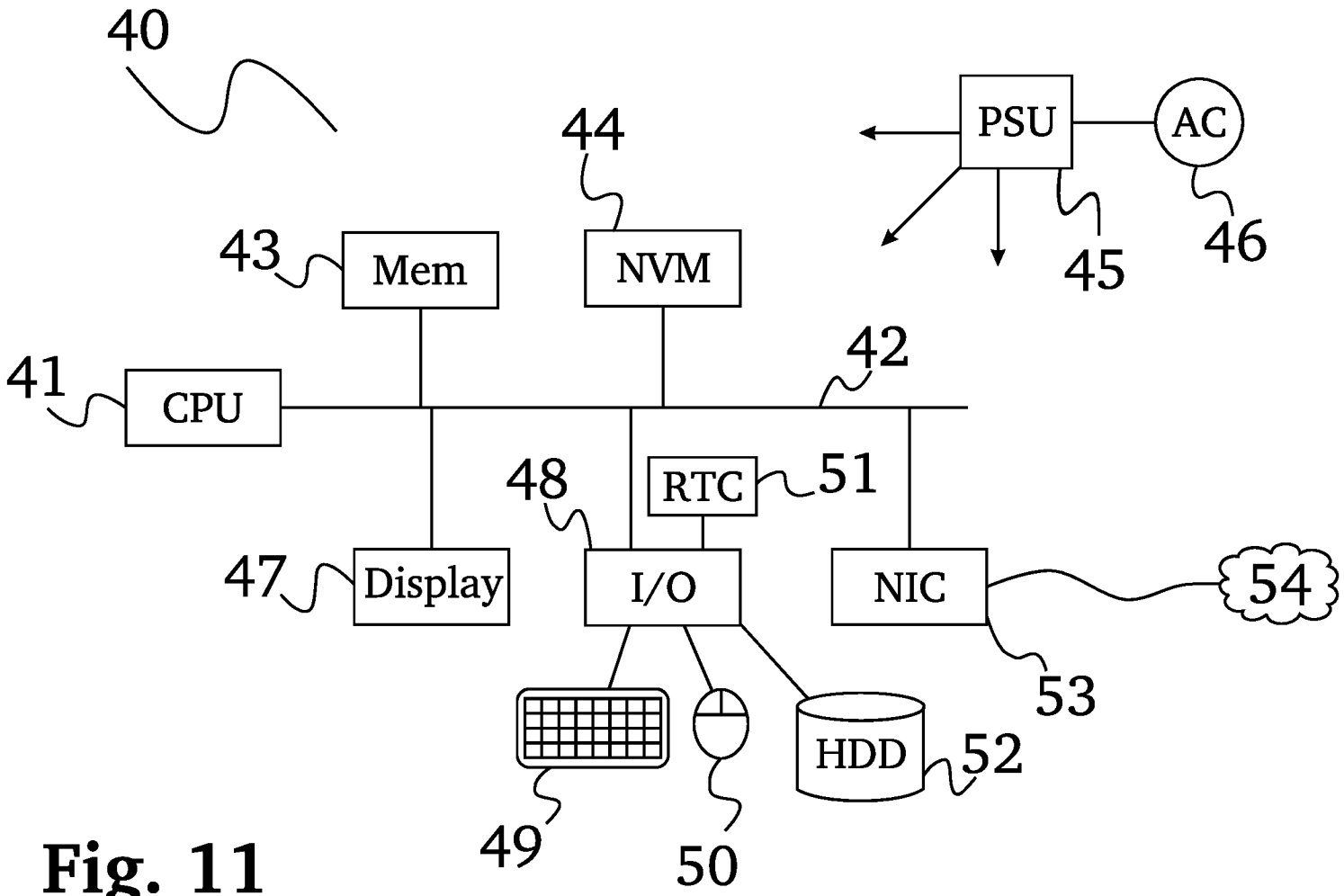
40
44
PSU
AC
43
Mem
NVM
45
46
42
41
CPU
48
RTC
51
47
Display
I/O
NIC
54
53
HDD
52
49
50

Fig. 11

PTO/AIA/82B (07-13)
Approved for use through 11/30/2014. OMB 0651-0051
U.S. Patent and Trademark Office; U.S. DEPARTMENT OF COMMERCE
Under the Paperwork Reduction Act of 1995, no persons are required to respond to a collection of information unless it displays a valid OMB control number

POWER OF ATTORNEY BY APPLICANT

I hereby revoke all previous powers of attorney given in the application identified in either the attached transmittal letter or the boxes below.

Application Number	Filing Date

(Note: The boxes above may be left blank if information is provided on form PTO/AIA/82A.)

☑ I hereby appoint the Patent Practitioner(s) associated with the following Customer Number as my/our attorney(s) or agent(s), and to transact all business in the United States Patent and Trademark Office connected therewith for the application referenced in the attached transmittal letter (form PTO/AIA/82A) or identified above: 82,318

OR

☐ I hereby appoint Practitioner(s) named in the attached list (form PTO/AIA/82C) as my/our attorney(s) or agent(s), and to transact all business in the United States Patent and Trademark Office connected therewith for the patent application referenced in the attached transmittal letter (form PTO/AIA/82A) or identified above. (Note: Complete form PTO/AIA/82C.)

Please recognize or change the correspondence address for the application identified in the attached transmittal letter or the boxes above to:

☑ The address associated with the above-mentioned Customer Number

OR

☐ The address associated with Customer Number:

OR

Firm or Individual Name					
Address					
City		State		Zip	
Country					
Telephone		Email			

I am the Applicant (if the Applicant is a juristic entity, list the Applicant name in the box):

QOMPLX LLC

☐ Inventor or Joint Inventor (title not required below)

☐ Legal Representative of a Deceased or Legally Incapacitated Inventor (title not required below)

☑ Assignee or Person to Whom the Inventor is Under an Obligation to Assign (provide signer's title if applicant is a juristic entity)

☐ Person Who Otherwise Shows Sufficient Proprietary Interest (e.g., a petition under 37 CFR 1.46(b)(2) was granted in the application or is concurrently being filed with this document) (provide signer's title if applicant is a juristic entity)

SIGNATURE of Applicant for Patent

The undersigned (whose title is supplied below) is authorized to act on behalf of the applicant (e.g., where the applicant is a juristic entity).

Signature	Jason Crabtree	Date (Optional)	
Name	Jason Crabtree		
Title	CEO		

NOTE: Signature - This form must be signed by the applicant in accordance with 37 CFR 1.33. See 37 CFR 1.4 for signature requirements and certifications. If more than one applicant, use multiple forms.

☑ Total of 1 forms are submitted.

This collection of information is required by 37 CFR 1.131, 1.32, and 1.33. The information is required to obtain or retain a benefit by the public which is to file (and by the USPTO to process) an application. Confidentiality is governed by 35 U.S.C. 122 and 37 CFR 1.11 and 1.14. This collection is estimated to take 3 minutes to complete, including gathering, preparing, and submitting the completed application form to the USPTO. Time will vary depending upon the individual case. Any comments on the amount of time you require to complete this form and/or suggestions for reducing this burden, should be sent to the Chief Information Officer, U.S. Patent and Trademark Office, U.S. Department of Commerce, P.O. Box 1450, Alexandria, VA 22313-1450. DO NOT SEND FEES OR COMPLETED FORMS TO THIS ADDRESS. **SEND TO: Commissioner for Patents, P.O. Box 1450, Alexandria, VA 22313-1450.**

If you need assistance in completing the form, call 1-800-PTO-9199 and select option 2.

UNITED STATES PATENT AND TRADEMARK OFFICE

UNITED STATES DEPARTMENT OF COMMERCE
United States Patent and Trademark Office
Address: COMMISSIONER FOR PATENTS
P.O. Box 1450
Alexandria, Virginia 22313-1450
www.uspto.gov

APPLICATION NUMBER	FILING or 371(c) DATE	GRP ART UNIT	FIL FEE REC'D	ATTY.DOCKET.NO	TOT CLAIMS	IND CLAIMS
18/885,510	09/13/2024		3300	15387FT	30	4

CONFIRMATION NO. 5139

FILING RECEIPT

OC000000078404402

82318
Brian Galvin
Galvin Patent Law LLC
2916 NW Bucklin Hill Road
Suite 485
Silverdale, WA 98383

Date Mailed: 10/01/2024

Receipt is acknowledged of this non-provisional utility patent application. The application will be taken up for examination in due course. Applicant will be notified as to the results of the examination. Any correspondence concerning the application must include the following identification information: the U.S. APPLICATION NUMBER, FILING DATE, NAME OF FIRST INVENTOR, and TITLE OF INVENTION. Fees transmitted by check or draft are subject to collection.

Please verify the accuracy of the data presented on this receipt. If an error is noted on this Filing Receipt, please submit a written request for a corrected Filing Receipt, including a properly marked-up ADS showing the changes with strike-through for deletions and underlining for additions. If you received a "Notice to File Missing Parts" or other Notice requiring a response for this application, please submit any request for correction to this Filing Receipt with your reply to the Notice. When the USPTO processes the reply to the Notice, the USPTO will generate another Filing Receipt incorporating the requested corrections provided that the request is grantable.

Inventor(s)

Jason Crabtree, Vienna, VA;
Andrew Sellers, Monument, CO;
Ian MacLeod, Arlington, VA;

Applicant(s)

QOMPLX LLC, Reston, VA;

Power of Attorney: The patent practitioners associated with Customer Number 82318

Domestic Priority data as claimed by applicant

This application is a CON of 18/464,623 09/11/2023
which is a CON of 17/539,137 11/30/2021 PAT 11,757,872
which is a CON of 16/856,827 04/23/2020 PAT 11,218,474
which is a CON of 15/790,860 10/23/2017 PAT 10,742,647
which claims benefit of 62/574,708 10/19/2017
and is a CIP of 15/616,427 06/07/2017 ABN
which is a CIP of 14/925,974 10/28/2015 ABN
and said 15/790,860 10/23/2017 is a CIP of 15/237,625 08/15/2016 PAT 10,248,910
which is a CIP of 15/206,195 07/08/2016 ABN
which is a CIP of 15/186,453 06/18/2016 ABN
which is a CIP of 15/166,158 05/26/2016 ABN
which is a CIP of 15/141,752 04/28/2016 PAT 10,860,962
which is a CIP of 15/091,563 04/05/2016 PAT 10,204,147
and is a CIP of 14/986,536 12/31/2015 PAT 10,210,255

and is a CIP of 14/925,974 10/28/2015 ABN

Foreign Applications for which priority is claimed (You may be eligible to benefit from the Patent Prosecution Highway program at the USPTO. Please see http://www.uspto.gov for more information.) - None.
Foreign application information must be provided in an Application Data Sheet in order to constitute a claim to foreign priority. See 37 CFR 1.55 and 1.76.

Permission to Access Application via Priority Document Exchange: Yes

Permission to Access Search Results: Yes

Applicant may provide or rescind an authorization for access using Form PTO/SB/39 or Form PTO/SB/69 as appropriate.

If Required, Foreign Filing License Granted: 09/24/2024

The country code and number of your priority application, to be used for filing abroad under the Paris Convention, is **US 18/885,510**

Projected Publication Date: 01/09/2025

Non-Publication Request: No

Early Publication Request: No
Title

CONTEXTUAL AND RISK-BASED MULTI-FACTOR AUTHENTICATION

Preliminary Class

Statement under 37 CFR 1.55 or 1.78 for AIA (First Inventor to File) Transition Applications: No

PROTECTING YOUR INVENTION OUTSIDE THE UNITED STATES

Since the rights granted by a U.S. patent extend only throughout the territory of the United States and have no effect in a foreign country, an inventor who wishes patent protection in another country must apply for a patent in a specific country or in regional patent offices. Applicants may wish to consider the filing of an international application under the Patent Cooperation Treaty (PCT). An international (PCT) application generally has the same effect as a regular national patent application in each PCT-member country. The PCT process **simplifies** the filing of patent applications on the same invention in member countries, but **does not result** in a grant of "an international patent" and does not eliminate the need of applicants to file additional documents and fees in countries where patent protection is desired.

Almost every country has its own patent law, and a person desiring a patent in a particular country must make an application for patent in that country in accordance with its particular laws. Since the laws of many countries differ in various respects from the patent law of the United States, applicants are advised to seek guidance from specific foreign countries to ensure that patent rights are not lost prematurely.

Applicants also are advised that in the case of inventions made in the United States, the Director of the USPTO must issue a license before applicants can apply for a patent in a foreign country. The filing of a U.S. patent application serves as a request for a foreign filing license. The application's filing receipt contains further information and guidance as to the status of applicant's license for foreign filing.

Applicants may wish to consult the USPTO booklet, "General Information Concerning Patents" (specifically, the section entitled "Treaties and Foreign Patents") for more information on timeframes and deadlines for filing foreign patent applications. The guide is available either by contacting the USPTO Contact Center at 800-786-9199, or it can be viewed on the USPTO website at http://www.uspto.gov/web/offices/pac/doc/general/index.html.

For information on preventing theft of your intellectual property (patents, trademarks and copyrights), you may wish to consult the U.S. Government website, http://www.stopfakes.gov. Part of a Department of Commerce initiative, this website includes self-help "toolkits" giving innovators guidance on how to protect intellectual property in specific countries such as China, Korea and Mexico. For questions regarding patent enforcement issues, applicants may call the U.S. Government hotline at 1-866-999-HALT (1-866-999-4258).

LICENSE FOR FOREIGN FILING UNDER

Title 35, United States Code, Section 184

Title 37, Code of Federal Regulations, 5.11 & 5.15

GRANTED

The applicant has been granted a license under 35 U.S.C. 184, if the phrase "IF REQUIRED, FOREIGN FILING LICENSE GRANTED" followed by a date appears on this form. Such licenses are issued in all applications where the conditions for issuance of a license have been met, regardless of whether or not a license may be required as set forth in 37 CFR 5.15. The scope and limitations of this license are set forth in 37 CFR 5.15(a) unless an earlier license has been issued under 37 CFR 5.15(b). The license is subject to revocation upon written notification. The date indicated is the effective date of the license, unless an earlier license of similar scope has been granted under 37 CFR 5.13 or 5.14.

This license is to be retained by the licensee and may be used at any time on or after the effective date thereof unless it is revoked. This license is automatically transferred to any related applications(s) filed under 37 CFR 1.53(d). This license is not retroactive.

The grant of a license does not in any way lessen the responsibility of a licensee for the security of the subject matter as imposed by any Government contract or the provisions of existing laws relating to espionage and the national security or the export of technical data. Licensees should apprise themselves of current regulations especially with respect to certain countries, of other agencies, particularly the Office of Defense Trade Controls, Department of State (with respect to Arms, Munitions and Implements of War (22 CFR 121-128)); the Bureau of Industry and Security, Department of Commerce (15 CFR parts 730-774); the Office of Foreign AssetsControl, Department of Treasury (31 CFR Parts 500+) and the Department of Energy.

NOT GRANTED

No license under 35 U.S.C. 184 has been granted at this time, if the phrase "IF REQUIRED, FOREIGN FILING LICENSE GRANTED" DOES NOT appear on this form. Applicant may still petition for a license under 37 CFR 5.12, if a license is desired before the expiration of 6 months from the filing date of the application. If 6 months has lapsed from the filing date of this application and the licensee has not received any indication of a secrecy order under 35 U.S.C. 181, the licensee may foreign file the application pursuant to 37 CFR 5.15(b).

SelectUSA

The United States represents the largest, most dynamic marketplace in the world and is an unparalleled location for business investment, innovation, and commercialization of new technologies. The U.S. offers tremendous resources and advantages for those who invest and manufacture goods here. Through SelectUSA, our nation works to promote and facilitate business investment. SelectUSA provides information assistance to the international investor community; serves as an ombudsman for existing and potential investors; advocates on behalf of U.S. cities, states, and regions competing for global investment; and counsels U.S. economic development organizations on investment attraction best practices. To learn more about why the United States is the best country in the world to develop technology, manufacture products, deliver services, and grow your business, visit http://www.SelectUSA.gov or call +1-202-482-6800.

PATENT APPLICATION FEE DETERMINATION RECORD

Substitute for Form PTO-875

Application or Docket Number
18/885,510

APPLICATION AS FILED - PART I

FOR	(Column 1) NUMBER FILED	(Column 2) NUMBER EXTRA	SMALL ENTITY RATE($)	SMALL ENTITY FEE($)	OR	OTHER THAN SMALL ENTITY RATE($)	OTHER THAN SMALL ENTITY FEE($)
BASIC FEE (37 CFR 1.16(a), (b), or (c))	N/A	N/A	N/A			N/A	320
SEARCH FEE (37 CFR 1.16(k), (i), or (m))	N/A	N/A	N/A			N/A	700
EXAMINATION FEE (37 CFR 1.16(o), (p), or (q))	N/A	N/A	N/A			N/A	800
TOTAL CLAIMS (37 CFR 1.16(i))	30 minus 20 =	* 10			OR	x 100 =	1000
INDEPENDENT CLAIMS (37 CFR 1.16(h))	4 minus 3 =	* 1				x 480 =	480
APPLICATION SIZE FEE (37 CFR 1.16(s))	If the specification and drawings exceed 100 sheets of paper, the application size fee due is $310 ($155 for small entity) for each additional 50 sheets or fraction thereof. See 35 U.S.C. 41(a)(1)(G) and 37 CFR 1.16(s).						0
MULTIPLE DEPENDENT CLAIM PRESENT (37 CFR 1.16(j))							0
* If the difference in column 1 is less than zero, enter "0" in column 2.			TOTAL			TOTAL	3300

APPLICATION AS AMENDED - PART II

		(Column 1) CLAIMS REMAINING AFTER AMENDMENT		(Column 2) HIGHEST NUMBER PREVIOUSLY PAID FOR	(Column 3) PRESENT EXTRA	SMALL ENTITY RATE($)	SMALL ENTITY ADDITIONAL FEE($)	OR	OTHER THAN SMALL ENTITY RATE($)	OTHER THAN SMALL ENTITY ADDITIONAL FEE($)
AMENDMENT A	Total (37 CFR 1.16(i))	*	Minus	**	=	x =		OR	x =	
AMENDMENT A	Independent (37 CFR 1.16(h))	*	Minus	***	=	x =		OR	x =	
AMENDMENT A	Application Size Fee (37 CFR 1.16(s))									
AMENDMENT A	FIRST PRESENTATION OF MULTIPLE DEPENDENT CLAIM (37 CFR 1.16(j))							OR		
						TOTAL ADD'L FEE		OR	TOTAL ADD'L FEE	

		(Column 1) CLAIMS REMAINING AFTER AMENDMENT		(Column 2) HIGHEST NUMBER PREVIOUSLY PAID FOR	(Column 3) PRESENT EXTRA	RATE($)	ADDITIONAL FEE($)	OR	RATE($)	ADDITIONAL FEE($)
AMENDMENT B	Total (37 CFR 1.16(i))	*	Minus	**	=	x =		OR	x =	
AMENDMENT B	Independent (37 CFR 1.16(h))	*	Minus	***	=	x =		OR	x =	
AMENDMENT B	Application Size Fee (37 CFR 1.16(s))									
AMENDMENT B	FIRST PRESENTATION OF MULTIPLE DEPENDENT CLAIM (37 CFR 1.16(j))							OR		
						TOTAL ADD'L FEE		OR	TOTAL ADD'L FEE	

* If the entry in column 1 is less than the entry in column 2, write "0" in column 3.
** If the "Highest Number Previously Paid For" IN THIS SPACE is less than 20, enter "20".
*** If the "Highest Number Previously Paid For" IN THIS SPACE is less than 3, enter "3".
The "Highest Number Previously Paid For" (Total or Independent) is the highest found in the appropriate box in column 1.

United States Patent and Trademark Office

Under Secretary of Commerce for Intellectual Property and
Director of the United States Patent and Trademark Office

WELCOME TO THE UNITED STATES PATENT AND TRADEMARK OFFICE (USPTO)

*Congratulations on taking the first step to protect your invention. You can now advertise or mark any products covered by this application for your invention as **"Patent Pending"** for as long as this application is pending!*

We are here to help you on the rest of your journey.

New to the process? The Patent Basics page will take you from "What is a patent?" to assistance with the application process.

- **www.uspto.gov/PatentBasics**

Consider cost savings. You might qualify for small entity or micro entity status, which means a discount on most USPTO patent fees.

- **www.uspto.gov/EntityStatus**

Become a registered electronic filer (eFiler). You'll gain access to the full capabilities of Patent Center. As a registered eFiler, you can electronically view your submission, track the progress of your application, and respond to USPTO correspondence.

- **www.uspto.gov/NewPatentFilers**

Learn how to identify which of your creative ideas might be intellectual property assets and how to protect them by using the USPTO Intellectual Property (IP) Identifier.

- **ipidentifier.uspto.gov**

We also provide Pro Se Assistance, support specifically geared for **independent inventors without an attorney or agent.** Follow the link below, call us at 866-767-3848, or email **proseassistancecenter@uspto.gov**.

- **www.uspto.gov/ProSePatents**

Need help near you? We have regional offices across the country, as well as Patent and Trademark Resource Centers in libraries in nearly every state, with specialists standing by to help you at no cost.

- **www.uspto.gov/locations**
- **www.uspto.gov/ptrc**

Contact us:

- **General information:** USPTO Contact Center
  - **www.uspto.gov/help**
- **Patent Center:**
  Patent Electronic Business Center
  - **www.uspto.gov/EBC**
- **Pre or post-examination:** Application Assistance Unit
  - **www.uspto.gov/PatentAssistance**

Want to learn more?

- **Access our free services** all in one spot. Find all of our contact centers, nationwide services, events, education, and training.
  - **www.uspto.gov/FreeServices**
- **Connect with us** on Instagram, LinkedIn, Twitter, Facebook, and YouTube.
- **Hear about resources for startups, inventors, and entrepreneurs,** as well as our initiatives engaging women, the military community, and others. These programs offer helpful tips and tricks on identifying and managing your IP, finding options for funding, and expanding your network to support your business.
  - **www.uspto.gov/startups**
  - **www.uspto.gov/inventors**
  - **www.uspto.gov/initiatives**
- We hope you connect with us by subscribing to receive important notifications by email.
  - **www.uspto.gov/subscribe**

Kathi Vidal

Kathi Vidal
Under Secretary of Commerce for Intellectual Property and
Director of the United States Patent and Trademark Office

Derrick Brent
Deputy Under Secretary of Commerce for Intellectual Property and
Deputy Director of the United States Patent and Trademark Office

UNITED STATES PATENT AND TRADEMARK OFFICE

UNITED STATES DEPARTMENT OF COMMERCE
United States Patent and Trademark Office
Address: COMMISSIONER FOR PATENTS
P.O. Box 1450
Alexandria, Virginia 22313-1450
www.uspto.gov

APPLICATION NO.	FILING DATE	FIRST NAMED INVENTOR	ATTORNEY DOCKET NO.	CONFIRMATION NO.
18/885,510	09/13/2024	Jason Crabtree	15387FT	5139

82318 7590 10/22/2024
Brian Galvin
Galvin Patent Law LLC
2916 NW Bucklin Hill Road
Suite 485
Silverdale, WA 98383

EXAMINER
CENTRAL, DOCKET

ART UNIT	PAPER NUMBER
OPAP	

NOTIFICATION DATE	DELIVERY MODE
10/22/2024	ELECTRONIC

Please find below and/or attached an Office communication concerning this application or proceeding.

The time period for reply, if any, is set in the attached communication.

Notice of the Office communication was sent electronically on above-indicated "Notification Date" to the following e-mail address(es):

USPTO@GALVINPATENTLAW.COM
eofficeaction@appcoll.com

Decision Granting Request for Prioritized Examination (Track I)	**Application No.** 18/885,510	**Applicant(s)** Crabtree et al.	
	Examiner JoAnne L Burke	**Art Unit** OPET	**AIA (FITF) Status** Yes

1. THE REQUEST FILED 13 September 2024 IS **GRANTED** .

   The above-identified application has met the requirements for prioritized examination
   A. ☑ for an original nonprovisional application (Track I).
   B. ☐ for an application undergoing continued examination (RCE).

2. **The above-identified application will undergo prioritized examination**. The application will be accorded special status throughout its entire course of prosecution until one of the following occurs:

   A. filing a **petition for extension of time** to extend the time period for filing a reply;

   B. filing an **amendment to amend the application to contain more than four independent claims, more than thirty total claims** , or a multiple dependent claim;

   C. filing a **request for continued examination** ;

   D. filing a notice of appeal;

   E. filing a request for suspension of action;

   F. mailing of a notice of allowance;

   G. mailing of a final Office action;

   H. completion of examination as defined in 37 CFR 41.102; or

   I. abandonment of the application.

Telephone inquiries with regard to this decision should be directed to JoAnne Burke at (571)272-4584. In his/her absence, calls may be directed to Petition Help Desk at (571) 272-3282.

/JOANNE L BURKE/ Lead Paralegal Specialist, OPET	

U.S. Patent and Trademark Office
PTO-2298 (Rev. 02-2012)

Doc Code: P.AS.V
Document Description: Patents Assignment Verification request

PTO/SB/469 (08-24)

CERTIFICATION AND REQUEST TO PLACE THE PATENT ASSIGNMENT ABSTRACT OF TITLE INTO THE PATENT APPLICATION FILE		
Practitioner Docket No.: 15387FT	Application No.: 18/885,510	Filing Date: September 13, 2024
First Named Inventor: Jason Crabtree	Title: CONTEXTUAL AND RISK-BASED MULTI-FACTOR AUTHENTICATION	

APPLICANT HEREBY CERTIFIES THE FOLLOWING AND REQUESTS THAT THE USPTO PLACE THE PATENT ASSIGNMENT ABSTRACT OF TITLE INTO THE ABOVE-IDENTIFIED PATENT APPLICATION FILE.

1. This form is being filed by a practitioner or the applicant for this application.

2. This form is being transmitted by electronic mail to RecordedAssignmentPlacement@uspto.gov.

3. This patent application is not open to the public.

4. Recognizing that Internet communications are not secure, I hereby authorize the USPTO to communicate with the undersigned and practitioners in accordance with 37 CFR 1.33 and 37 CFR 1.34 concerning any subject matter of this application by video conferencing, instant messaging, or electronic mail. I understand that a copy of these communications will be made of record in the application file.

5. The undersigned requests that the Patent Assignment Abstract of Title for this application be placed into the patent application file.

Signature	Date	Practitioner Registration No.
/BRIAN R. GALVIN/	November 1, 2024	50,966
Name (Print/Typed)	Telephone Number	
Brian R. Galvin	(360) 674-6233	

***Note**: This form must be signed in accordance with 37 CFR 1.33. See 37 CFR 1.4(d) for signature requirements and certifications. Submit multiple forms if more than one signature is required, see below*.*

☑ * Total of 1 forms are submitted.

Privacy Act Statement

The Privacy Act of 1974 (P.L. 93-579) requires that you be given certain information in connection with your submission of the attached form related to a patent application or patent. The United States Patent and Trademark Office (USPTO) collects the information in this record under authority of 35 U.S.C. 2. The USPTO's system of records is used to manage all applicant and owner information including name, citizenship, residence, post office address, and other information with respect to inventors and their legal representatives pertaining to the applicant's/owner's activities in connection with the invention for which a patent is sought or has been granted. The applicable Privacy Act System of Records Notice for the information collected in this form is COMMERCE/PAT-TM-7 Patent Application Files, available in the Federal Register at 78 FR 19243 (March 29, 2013), https://www.govinfo.gov/content/pkg/FR-2013-03-29/pdf/2013-07341.pdf.

Routine uses of the information in this record may include disclosure to: 1) law enforcement, in the event that the system of records indicates a violation or potential violation of law; 2) a federal, state, local, or international agency, in response to its request; 3) a contractor of the USPTO having need for the information in order to perform a contract; 4) the Department of Justice for determination of whether the Freedom of Information Act (FOIA) requires disclosure of the record; 5) a Member of Congress submitting a request involving an individual to whom the record pertains, when the individual has requested the Member's assistance with respect to the subject matter of the record; 6) a court, magistrate, or administrative tribunal, in the course of presenting evidence, including disclosures to opposing counsel in the course of settlement negotiations; 7) the Administrator, General Services Administration (GSA), or their designee, during an inspection of records conducted by GSA under authority of 44 U.S.C. 2904 and 2906, in accordance with the GSA regulations and any other relevant (i.e., GSA or Commerce) directive, where such disclosure shall not be used to make determinations about individuals; 8) another federal agency for purposes of National Security review (35 U.S.C. 181) and for review pursuant to the Atomic Energy Act (42 U.S.C. 218(c)); 9) the Office of Personnel Management (OPM) for personnel research purposes; and 10) the Office of Management and Budget (OMB) for legislative coordination and clearance.

If you do not furnish the information requested on this form, the USPTO may not be able to process and/or examine your submission, which may result in termination of proceedings, abandonment of the application, and/or expiration of the patent.

Notice of References Cited	Application/Control No. 18/885,510	Applicant(s)/Patent Under Reexamination Crabtree et al.	
	Examiner SHARIF E ULLAH	Art Unit 2495	Page 1 of 5

U.S. PATENT DOCUMENTS

*		Document Number Country Code-Number-Kind Code	Date YYYY-MM-DD	Name	CPC Classification	US Classification
*	A	US-20160006629-A1	2016-01-07	Ianakiev; George	G06F21/85	709/224
*	B	US-20140359552-A1	2014-12-04	Misra; Prateep	H04L67/12	717/100
*	C	US-20150020199-A1	2015-01-15	Neil; Joshua Charles	H04L63/1408	726/23
*	D	US-7171515-B2	2007-01-30	Ohta; Yoshiyuki	G06F12/127	711/E12.076
*	E	US-20050000165-A1	2005-01-06	Dischinat, Greg	E06B7/23	49/496.1
*	F	US-6256544-B1	2001-07-03	Weissinger; Wolfgang	G05B19/0421	700/1
*	G	US-20130117852-A1	2013-05-09	Stute; Michael Roy	H04L63/1425	726/23
*	H	US-20070226796-A1	2007-09-27	Gilbert; Logan	G06F21/577	726/25
*	I	US-20130111592-A1	2013-05-02	ZHU; Fang Julie	G06F21/577	726/25
*	J	US-20160275123-A1	2016-09-22	LIN; WUJUAN	G06F9/5083	1/1
*	K	US-10846391-B1	2020-11-24	Bonney; Jordan C.	G06V40/70	1/1
*	L	US-10643144-B2	2020-05-05	Bowers; Stuart Michael	G06N20/00	1/1
*	M	US-10333992-B2	2019-06-25	Kinder; Ross R.	H04L63/1416	1/1

FOREIGN PATENT DOCUMENTS

*		Document Number Country Code-Number-Kind Code	Date YYYY-MM-DD	Country	Name	CPC Classification
	N					
	O					
	P					
	Q					
	R					
	S					
	T					

NON-PATENT DOCUMENTS

*		Include as applicable: Author, Title Date, Publisher, Edition or Volume, Pertinent Pages)
	U	
	V	
	W	
	X	

*A copy of this reference is not being furnished with this Office action. (See MPEP § 707.05(a).)
Dates in YYYY-MM-DD format are publication dates. Classifications may be US or foreign.

Notice of References Cited	Application/Control No. 18/885,510	Applicant(s)/Patent Under Reexamination Crabtree et al.	
	Examiner SHARIF E ULLAH	Art Unit 2495	Page 2 of 5

U.S. PATENT DOCUMENTS

*		Document Number Country Code-Number-Kind Code	Date YYYY-MM-DD	Name	CPC Classification	US Classification
*	A	US-10270748-B2	2019-04-23	Briceno; Marc	H04L9/006	1/1
*	B	US-10216485-B2	2019-02-26	Misra; Prateep	H04L67/10	1/1
*	C	US-10210246-B2	2019-02-19	Stojanovic; Alexander Sasha	G06Q30/02	1/1
*	D	US-10044726-B2	2018-08-07	Dulkin; Andrey	H04L63/1441	1/1
*	E	US-10191768-B2	2019-01-29	Bishop; Elden Gregory	G06F9/4881	1/1
*	F	US-20180082304-A1	2018-03-22	Summerlin; William Christopher	G06Q20/3229	1/1
*	G	US-9774522-B2	2017-09-26	Vasseur; Jean-Philippe	H04L41/16	1/1
*	H	US-9652538-B2	2017-05-16	Shivaswamy; Gurudatta Horantur	H04N7/16	1/1
*	I	US-9560065-B2	2017-01-31	Neil; Joshua Charles	H04L63/1425	1/1
*	J	US-20170090893-A1	2017-03-30	Aditya; Abhimanyu	G06F8/51	1/1
*	K	US-9558220-B2	2017-01-31	Nixon; Mark J.	G05B19/042	1/1
*	L	US-9400962-B2	2016-07-26	Prasad; Mukul Ranjan	G06Q10/06	1/1
*	M	US-9466041-B2	2016-10-11	Simitsis; Alkiviadis	G06Q10/0633	1/1

FOREIGN PATENT DOCUMENTS

*		Document Number Country Code-Number-Kind Code	Date YYYY-MM-DD	Country	Name	CPC Classification
	N					
	O					
	P					
	Q					
	R					
	S					
	T					

NON-PATENT DOCUMENTS

*		Include as applicable: Author, Title Date, Publisher, Edition or Volume, Pertinent Pages)
	U	
	V	
	W	
	X	

*A copy of this reference is not being furnished with this Office action. (See MPEP § 707.05(a).)
Dates in YYYY-MM-DD format are publication dates. Classifications may be US or foreign.

Notice of References Cited	Application/Control No. 18/885,510	Applicant(s)/Patent Under Reexamination Crabtree et al.	
	Examiner SHARIF E ULLAH	Art Unit 2495	Page 3 of 5

U.S. PATENT DOCUMENTS

*		Document Number Country Code-Number-Kind Code	Date YYYY-MM-DD	Name	CPC Classification	US Classification
*	A	US-9256735-B2	2016-02-09	Stute; Michael Roy	H04L63/1425	1/1
*	B	US-20160012235-A1	2016-01-14	Lee; Thomas Elliott	G06F21/6218	726/25
*	C	US-20150319156-A1	2015-11-05	GUCCIONE; Louis J.	H04L63/083	726/7
*	D	US-9152727-B1	2015-10-06	Balducci; Michael	G06F16/955	1/1
*	E	US-9110706-B2	2015-08-18	Yu; Yuan	G06F8/445	1/1
*	F	US-9069976-B2	2015-06-30	Toole; Robert C.	H04L63/105	1/1
*	G	US-8949960-B2	2015-02-03	Berkman; Omer	G06F21/31	726/6
*	H	US-20140324521-A1	2014-10-30	Mun; Johnathan	G06Q30/0201	705/7.28
*	I	US-8832840-B2	2014-09-09	Zhu; Fang Julie	G06F21/577	726/25
*	J	US-8751867-B2	2014-06-10	Marvasti; Mazda A.	H04L41/147	714/26
*	K	US-8457996-B2	2013-06-04	Winkler; Ulrich	G06Q10/00	705/348
*	L	US-8346753-B2	2013-01-01	Hayes; Paul V	G06F16/951	707/711
*	M	US-8069190-B2	2011-11-29	McColl; William Finlay	G06F16/2465	707/810

FOREIGN PATENT DOCUMENTS

*		Document Number Country Code-Number-Kind Code	Date YYYY-MM-DD	Country	Name	CPC Classification
	N					
	O					
	P					
	Q					
	R					
	S					
	T					

NON-PATENT DOCUMENTS

*		Include as applicable: Author, Title Date, Publisher, Edition or Volume, Pertinent Pages)
	U	
	V	
	W	
	X	

*A copy of this reference is not being furnished with this Office action. (See MPEP § 707.05(a).)
Dates in YYYY-MM-DD format are publication dates. Classifications may be US or foreign.

Notice of References Cited	Application/Control No. 18/885,510	Applicant(s)/Patent Under Reexamination Crabtree et al.	
	Examiner SHARIF E ULLAH	Art Unit 2495	Page 4 of 5

U.S. PATENT DOCUMENTS

*		Document Number Country Code-Number-Kind Code	Date YYYY-MM-DD	Name	CPC Classification	US Classification
*	A	US-20110307467-A1	2011-12-15	Severance; Stephen	H04L67/02	707/E17.108
*	B	US-7925561-B2	2011-04-12	Xu; Chenjian	G06Q40/06	705/37
*	C	US-7818224-B2	2010-10-19	Boerner; Sean T.	G06F17/18	705/37
*	D	US-7818417-B2	2010-10-19	Ginis; Roman	H04L41/50	709/224
*	E	US-7685296-B2	2010-03-23	Brill; Eric D.	G06F16/951	709/204
*	F	US-7546333-B2	2009-06-09	Alon; Roee	H04L67/1097	709/200
*	G	US-7530105-B2	2009-05-05	Gilbert; Logan	H04L63/1425	709/227
*	H	US-7322044-B2	2008-01-22	Hrastar; Scott E.	H04L41/0893	726/22
*	I	US-7310632-B2	2007-12-18	Meek; Christopher A.	G06F16/951	707/E17.108
*	J	US-7227948-B2	2007-06-05	Ohkuma; Kenji	H04L9/0631	380/42
*	K	US-7139747-B1	2006-11-21	Najork; Marc Alexander	G06F16/951	707/999.102
*	L	US-20050165822-A1	2005-07-28	Yeung, Simon D.	G06Q10/10	707/999.102
*	M	US-6857073-B2	2005-02-15	French; Jennifer	H04L63/105	713/168

FOREIGN PATENT DOCUMENTS

*		Document Number Country Code-Number-Kind Code	Date YYYY-MM-DD	Country	Name	CPC Classification
	N					
	O					
	P					
	Q					
	R					
	S					
	T					

NON-PATENT DOCUMENTS

*		Include as applicable: Author, Title Date, Publisher, Edition or Volume, Pertinent Pages)
	U	
	V	
	W	
	X	

*A copy of this reference is not being furnished with this Office action. (See MPEP § 707.05(a).)
Dates in YYYY-MM-DD format are publication dates. Classifications may be US or foreign.

Notice of References Cited	Application/Control No. 18/885,510	Applicant(s)/Patent Under Reexamination Crabtree et al.	
	Examiner SHARIF E ULLAH	Art Unit 2495	Page 5 of 5

U.S. PATENT DOCUMENTS

*		Document Number Country Code-Number-Kind Code	Date YYYY-MM-DD	Name	CPC Classification	US Classification
*	A	US-6477572-B1	2002-11-05	Elderton; John	H04L41/0893	709/224
	B					
	C					
	D					
	E					
	F					
	G					
	H					
	I					
	J					
	K					
	L					
	M					

FOREIGN PATENT DOCUMENTS

*		Document Number Country Code-Number-Kind Code	Date YYYY-MM-DD	Country	Name	CPC Classification
	N					
	O					
	P					
	Q					
	R					
	S					
	T					

NON-PATENT DOCUMENTS

*		Include as applicable: Author, Title Date, Publisher, Edition or Volume, Pertinent Pages)
	U	
	V	
	W	
	X	

*A copy of this reference is not being furnished with this Office action. (See MPEP § 707.05(a).)
Dates in YYYY-MM-DD format are publication dates. Classifications may be US or foreign.

Index of Claims	Application/Control No.	Applicant(s)/Patent Under Reexamination
	18/885,510	Crabtree et al.
	Examiner	**Art Unit**
	SHARIF E ULLAH	2495

✓	Rejected	-	Cancelled	N	Non-Elected	A	Appeal
=	Allowed	÷	Restricted	I	Interference	O	Objected

CLAIMS

☐ Claims renumbered in the same order as presented by applicant ☐ CPA ☐ T.D. ☐ R.1.47

CLAIM		DATE								
Final	Original	11/02/2024								
	1	✓								
	2	✓								
	3	✓								
	4	✓								
	5	✓								
	6	✓								
	7	✓								
	8	✓								
	9	✓								
	10	✓								
	11	✓								
	12	✓								
	13	✓								
	14	✓								
	15	✓								
	16	✓								
	17	✓								
	18	✓								
	19	✓								
	20	✓								
	21	✓								
	22	✓								
	23	✓								
	24	✓								
	25	✓								
	26	✓								
	27	✓								
	28	✓								
	29	✓								
	30	✓								

Search Notes	Application/Control No.	Applicant(s)/Patent Under Reexamination
	18/885,510	Crabtree et al.
	Examiner	**Art Unit**
	SHARIF E ULLAH	2495

CPC - Searched*		
Symbol	**Date**	**Examiner**

CPC Combination Sets - Searched*		
Symbol	**Date**	**Examiner**
G06Q30/0202 OR G06Q40/04 OR G06Q10/0637 OR G06Q10/067 OR G06Q30/0201 OR G06Q30/0205 OR G06Q40/06 OR G06Q40/08 OR G06N5/04 OR G06N7/005 OR G06N99/005 OR H04L63/1425 OR H04L63/1441 OR H04L63/0861	11/02/2024	SU

US Classification - Searched*			
Class	**Subclass**	**Date**	**Examiner**
726	7	11/02/2024	SU

* See search history printout included with this form or the SEARCH NOTES box below to determine the scope of the search.

Search Notes		
Search Notes	**Date**	**Examiner**
SEARCH class limited w/text search (see search history)	11/02/2024	SU
SEARCH inventor and assignee search (see search history)	11/02/2024	SU
SEARCH text search (see search history)	11/02/2024	SU
NPL Google scholar	11/02/2024	SU

Interference Search			
US Class/CPC Symbol	**US Subclass/CPC Group**	**Date**	**Examiner**

/SHARIF E ULLAH/ Primary Examiner, Art Unit 2495	

Patents

CONTEXTUAL AND RISK-BASED MULTI-FACTOR AUTHENTICATION

(CONTEXTUAL AND RISK-BASED MULTI-FACTOR AUTHENTICATION);

About 82,970 results

Download Side-by-si

Sort by · Relevance Group by · None Deduplicate by · Family Results / page · 10

Security policy manager to configure permissions on computing devices

EP US · US20200285781A1 · Brian James Buck · Lookout, Inc.
Priority 2019-03-07 · Filed 2019-03-07 · Published 2020-09-10
15 . The system of claim 14 , wherein the instructions are further configured to instruct the at least one processor to: determine a change of **context** for the user device; and in response to determining the change of **context**, revoke the permission for the software on the user device. 16 . The system ...

Multi-factor authentication

WO US GB · US20190122204A1 · Karl Ackerman · Sophos Limited
Priority 2016-06-30 · Filed 2018-12-18 · Published 2019-04-25
18 . A security appliance for providing a **multi-factor authentication** verification method based on a secure heartbeat from and endpoint, the security appliance comprising: a network interface configured to couple the security appliance in a communicating relationship with a data network; a memory;

Methods of Dynamically Securing Electronic Devices and Other Communications ...

WO US CA · US20200151349A1 · Steven Cavanaugh · Internet Infrastructure Services Corp.
Priority 2013-10-24 · Filed 2020-01-10 · Published 2020-05-14
Existing systems do not leverage the increased computational power of the modern devices or use methods of onboard sensor data capture and analysis to produce a **contextual** awareness of the user, device and assigned security policies. The need for a near real time **contextual** system with predictive ...

Communicating with client device to determine security risk in allowing access ...

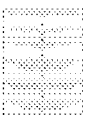

US · US11818129B2 · Rida Zerrad · Lookout, Inc.
Priority 2019-03-07 · Filed 2020-06-05 · Granted 2023-11-14 · Published 2023-11-14
, wherein the determination of the first security state includes transmitting a request for a first **context** to the client device. 3. The method of claim 2 , further comprising receiving the first **context** from the client device, the first **context** representing information related to the security of the ...

Quarantine of software based on analysis of updated device data

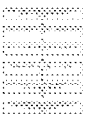

US · US11301566B2 · Timothy Michael Wyatt · Lookout, Inc.
Priority 2019-03-07 · Filed 2019-03-07 · Granted 2022-04-12 · Published 2022-04-12
... . 7. The method of claim 1 , wherein the message to the second computing device includes at least one of an identifier of a source of the first security threat, an assessment of the first security threat, a **context** for the first security threat, or a recommended response. 8. The method of claim 1 , ...

Securing out-of-band messages

US CN · US8447787B2 · Johannes Klein · Microsoft Corporation
Priority 2010-02-09 · Filed 2010-02-09 · Granted 2013-05-21 · Published 2013-05-21
Similar ... , mobile telephones, network PCs, minicomputers, mainframe computers, distributed computing environments that include any of the above systems or devices, and the like. Embodiments of the disclosure may be described in the general **context** of computer-executable instructions, such as program modules,

Distributed denial of service attack protection for internet of things devices

US · US10382489B2 · K Thumaleswar Reddy · Cisco Technology, Inc.
Priority 2016-10-13 · Filed 2016-10-13 · Granted 2019-08-13 · Published 2019-08-13
Similar DOTS supplements calls for help with pertinent details about the detected attack, allowing those appropriate entities participating in DOTS to form ad hoc, adaptive alliances against DDoS attacks. The embodiments described herein are explained in the **context** of DOTS. However, those skilled in the ...

Protection against phishing of two-factor authentication credentials

US · US20210058395A1 · Bjorn Markus Jakobsson · Righquestion, Llc
Priority 2018-08-08 · Filed 2020-10-19 · Published 2021-02-25
50, no. 10, pp. 94-100, 2007; and Cisco, "Email Attacks: This Time It's Personal") that the success rate of deceptive emails can be increased from single-digit percentages to more than 70% by using **contextual** information for targeting. In terms of the initial compromise, it is noteworthy that the ...

Distributing security codes through a restricted communications channel

US • US10129246B2 • Manjunath Bhat • Airwatch Llc

Priority 2015-06-18 • Filed 2017-11-06 • Granted 2018-11-13 • Published 2018-11-13

Similar ... data store 121 includes, for example, compliance rules 130 , device data 133 , and potentially other data. Within the **context** of an enterprise, compliance rules 130 include one or more rules that, when violated, can cause the management service 112 to issue a management command. Compliance rules 130

Use of device risk evaluation to manage access to services

WO EP US IL • US10218697B2 • Aaron Cockerill • Lookout, Inc.

Priority 2017-06-09 • Filed 2017-06-09 • Granted 2019-02-26 • Published 2019-02-26

performing the evaluation comprises determining an authenticity of the application; and performing the evaluation further comprises assessing a **context** of a user of the first computing device, the **context** comprising at least one of: a location of the first computing device, a device location for a ...

Next > >> About 82,970 results

Top 1000 results by filing date

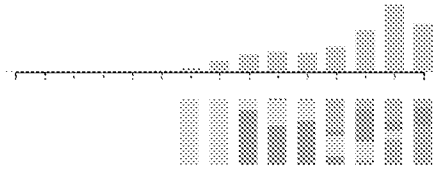

Relative count of top 5 values

Assignees	Inventors	CPCs
中国移动通信集团有限公司		1
Research In Motion Limited		1
International Business Machines Corporation		
Sophos Limited		0
Citrix Systems, Inc.		0

Expand

Related landscapes

Engineering & Computer Science

Computer Security & Cryptography

Computer Networks & Wireless Communication

About Send Feedback Public Datasets Terms Privacy Policy Help

Bibliographic Data

Application No: 18/885,510

Foreign Priority claimed: ○ Yes ◉ No

35 USC 119 (a-d) conditions met: ☐ Yes ☑ No ☐ Met After Allowance

Verified and Acknowledged: /SHARIF E ULLAH/ (Examiner's Signature) SU (Initials)

Title: CONTEXTUAL AND RISK-BASED MULTI-FACTOR AUTHENTICATION

FILING or 371(c) DATE	CLASS	GROUP ART UNIT	ATTORNEY DOCKET NO.
09/13/2024 RULE	726	2495	15387FT

APPLICANTS

QOMPLX LLC, Reston, VA, UNITED STATES

INVENTORS

Jason Crabtree, Vienna, VA, UNITED STATES

Andrew Sellers, Monument, CO, UNITED STATES

Ian MacLeod, Arlington, VA, UNITED STATES

CONTINUING DATA

This application is a CON of 18464623 09/11/2023

18464623 is a CON of 17539137 11/30/2021 PAT 11757872

17539137 is a CON of 16856827 04/23/2020 PAT 11218474

16856827 is a CON of 15790860 10/23/2017 PAT 10742647

15790860 has PRO of 62574708 10/19/2017

15790860 is a CIP of 15616427 06/07/2017ABN

15790860 is a CIP of 15237625 08/15/2016 PAT 10248910

15237625 is a CIP of 15206195 07/08/2016ABN

15206195 is a CIP of 15186453 06/18/2016ABN

15186453 is a CIP of 15166158 05/26/2016ABN

15166158 is a CIP of 15141752 04/28/2016 PAT 10860962

15141752 is a CIP of 15091563 04/05/2016 PAT 10204147

15141752 is a CIP of 14986536 12/31/2015 PAT 10210255

15141752 is a CIP of 14925974 10/28/2015ABN

15616427 is a CIP of 14925974 10/28/2015ABN

FOREIGN APPLICATIONS

IF REQUIRED, FOREIGN LICENSE GRANTED**

09/24/2024

STATE OR COUNTRY

UNITED STATES

ADDRESS

Brian Galvin
Galvin Patent Law LLC
2916 NW Bucklin Hill Road
Suite 485
Silverdale, WA 98383
UNITED STATES

FILING FEE RECEIVED

$7,640

PE2E SEARCH - Search History (Prior Art)

Ref #	Hits	Search Query	DBs	Default Operator	Plurals	British Equivalents	Time Stamp
L1	31	"15237625"	(US-PGPUB; USPAT; USOCR; FPRS; EPO; JPO; DERWENT; IBM_TDB)	OR	OFF	OFF	2018/11/26 01:31 PM
L2	11853	726/23	(US-PGPUB; USPAT; USOCR; FPRS; EPO; JPO; DERWENT; IBM_TDB)	OR	OFF	OFF	2018/11/26 01:31 PM
L3	9315	726/23.ccls.	(US-PGPUB; USPAT; USOCR; FPRS; EPO; JPO; DERWENT; IBM_TDB)	OR	OFF	OFF	2018/11/26 01:31 PM
L4	31	"15237625"	(US-PGPUB; USPAT; USOCR; FPRS; EPO; JPO; DERWENT; IBM_TDB)	OR	OFF	OFF	2018/11/26 01:31 PM
L5	71	(jason near2 crabtree).inv.	(US-PGPUB; USPAT; USOCR; FPRS; EPO; JPO; DERWENT; IBM_TDB)	OR	OFF	OFF	2018/11/26 01:32 PM
L6	0	(fractal near2 industries).as.	(US-PGPUB; USPAT; USOCR; FPRS; EPO; JPO; DERWENT; IBM_TDB)	OR	OFF	OFF	2018/11/26 01:32 PM
L7	53	"14925974"	(US-PGPUB; USPAT; USOCR; FPRS; EPO; JPO; DERWENT; IBM_TDB)	OR	OFF	OFF	2018/11/26 01:32 PM
L8	0	("14925974").PN.	(US-PGPUB; USPAT; USOCR; FPRS; EPO; JPO; DERWENT; IBM_TDB)	OR	OFF	OFF	2018/11/26 01:32 PM
L9	0	("15237625").PN.	(US-PGPUB; USPAT; USOCR; FPRS; EPO; JPO; DERWENT; IBM_TDB)	OR	OFF	OFF	2018/11/26 01:32 PM
L10	17	L1 and (time series).clm.	(US-PGPUB; USPAT; USOCR; FPRS; EPO; JPO; DERWENT; IBM_TDB)	OR	OFF	OFF	2018/11/26 01:34 PM
L11	1	((predictive near2 planning) same (real near2 time near2 triage near2 analysis))	(US-PGPUB; USPAT; USOCR; FPRS; EPO; JPO; DERWENT; IBM_TDB)	OR	OFF	OFF	2018/11/26 01:37 PM
L12	3815236	((predictive near2 planning) same (real near2 time) with triage analysis)	(US-PGPUB; USPAT; USOCR; FPRS; EPO; JPO; DERWENT; IBM_TDB)	OR	OFF	OFF	2018/11/26 01:38 PM
L13	1	((predictive near2	(US-PGPUB; USPAT;	OR	OFF	OFF	2018/11/26

		planning) same (real near2 time) with triage with analysis)	USOCR; FPRS; EPO; JPO; DERWENT; IBM_TDB)				01:38 PM
L14	21	((real near2 time) with triage with analysis)	(US-PGPUB; USPAT; USOCR; FPRS; EPO; JPO; DERWENT; IBM_TDB)	OR	OFF	OFF	2018/11/26 01:38 PM
L15	0	L14 and (predicitve near2 planning)	(US-PGPUB; USPAT; USOCR; FPRS; EPO; JPO; DERWENT; IBM_TDB)	OR	OFF	OFF	2018/11/26 01:39 PM
L16	1	L14 and (cyber near3 attack$5)	(US-PGPUB; USPAT; USOCR; FPRS; EPO; JPO; DERWENT; IBM_TDB)	OR	OFF	OFF	2018/11/26 01:39 PM
L17	1	L14 and (cybersecurity)	(US-PGPUB; USPAT; USOCR; FPRS; EPO; JPO; DERWENT; IBM_TDB)	OR	OFF	OFF	2018/11/26 01:40 PM
L18	1	L14 and (cyber$1security)	(US-PGPUB; USPAT; USOCR; FPRS; EPO; JPO; DERWENT; IBM_TDB)	OR	OFF	OFF	2018/11/26 01:40 PM
L19	0	(predicitve near2 planning)	(US-PGPUB; USPAT; USOCR; FPRS; EPO; JPO; DERWENT; IBM_TDB)	OR	OFF	OFF	2018/11/26 01:40 PM
L20	624	(predictive near2 planning)	(US-PGPUB; USPAT; USOCR; FPRS; EPO; JPO; DERWENT; IBM_TDB)	OR	OFF	OFF	2018/11/26 01:41 PM
L21	5	L20 and (cyber$1security)	(US-PGPUB; USPAT; USOCR; FPRS; EPO; JPO; DERWENT; IBM_TDB)	OR	OFF	OFF	2018/11/26 01:41 PM
L22	5	L21 AND ((G06Q30/0202 OR G06Q40/04 OR G06Q10/0637 OR G06Q10/067 OR G06Q30/0201 OR G06Q30/0205 OR G06Q40/06 OR G06Q40/08 OR G06N5/04 OR G06N7/005 OR G06N99/005 OR H04L63/1425 OR H04L63/1441).CPC.)	(US-PGPUB; USPAT; USOCR; FPRS; EPO; JPO; DERWENT; IBM_TDB)	OR	OFF	OFF	2018/11/26 01:41 PM
L23	8283	726/2.ccls.	(US-PGPUB; USPAT; USOCR; FPRS; EPO; JPO; DERWENT; IBM_TDB)	OR	OFF	OFF	2018/11/26 02:03 PM
L24	2933	726/21.ccls.	(US-PGPUB; USPAT;	OR	OFF	OFF	2018/11/26

			USOCR; FPRS; EPO; JPO; DERWENT; IBM_TDB)				02:03 PM
L25	361	726/36.ccls.	(US-PGPUB; USPAT; USOCR; FPRS; EPO; JPO; DERWENT; IBM_TDB)	OR	OFF	OFF	2018/11/26 02:03 PM
L26	5002	713/150.ccls.	(US-PGPUB; USPAT; USOCR; FPRS; EPO; JPO; DERWENT; IBM_TDB)	OR	OFF	OFF	2018/11/26 02:03 PM
L27	926	713/163.ccls.	(US-PGPUB; USPAT; USOCR; FPRS; EPO; JPO; DERWENT; IBM_TDB)	OR	OFF	OFF	2018/11/26 02:03 PM
L28	1754	713/181.ccls.	(US-PGPUB; USPAT; USOCR; FPRS; EPO; JPO; DERWENT; IBM_TDB)	OR	OFF	OFF	2018/11/26 02:03 PM
L29	3070	380/255.ccls.	(US-PGPUB; USPAT; USOCR; FPRS; EPO; JPO; DERWENT; IBM_TDB)	OR	OFF	OFF	2018/11/26 02:03 PM
L30	351	380/264.ccls.	(US-PGPUB; USPAT; USOCR; FPRS; EPO; JPO; DERWENT; IBM_TDB)	OR	OFF	OFF	2018/11/26 02:03 PM
L31	134	380/276.ccls.	(US-PGPUB; USPAT; USOCR; FPRS; EPO; JPO; DERWENT; IBM_TDB)	OR	OFF	OFF	2018/11/26 02:04 PM
L32	0	L21 and L23	(US-PGPUB; USPAT; USOCR; FPRS; EPO; JPO; DERWENT; IBM_TDB)	OR	OFF	OFF	2018/11/26 02:04 PM
L33	0	L21 and L24	(US-PGPUB; USPAT; USOCR; FPRS; EPO; JPO; DERWENT; IBM_TDB)	OR	OFF	OFF	2018/11/26 02:04 PM
L34	0	L21 and L25	(US-PGPUB; USPAT; USOCR; FPRS; EPO; JPO; DERWENT; IBM_TDB)	OR	OFF	OFF	2018/11/26 02:04 PM
L35	0	L21 and L26	(US-PGPUB; USPAT; USOCR; FPRS; EPO; JPO; DERWENT; IBM_TDB)	OR	OFF	OFF	2018/11/26 02:04 PM
L36	0	L21 and L27	(US-PGPUB; USPAT; USOCR; FPRS; EPO; JPO; DERWENT; IBM_TDB)	OR	OFF	OFF	2018/11/26 02:04 PM
L37	0	L21 and L28	(US-PGPUB; USPAT; USOCR; FPRS; EPO;	OR	OFF	OFF	2018/11/26 02:04 PM

			JPO; DERWENT; IBM_TDB)				
L38	0	L21 and L29	(US-PGPUB; USPAT; USOCR; FPRS; EPO; JPO; DERWENT; IBM_TDB)	OR	OFF	OFF	2018/11/26 02:04 PM
L39	0	L21 and L30	(US-PGPUB; USPAT; USOCR; FPRS; EPO; JPO; DERWENT; IBM_TDB)	OR	OFF	OFF	2018/11/26 02:04 PM
L40	0	L21 and L31	(US-PGPUB; USPAT; USOCR; FPRS; EPO; JPO; DERWENT; IBM_TDB)	OR	OFF	OFF	2018/11/26 02:05 PM
L41	4	("20050000165"|"20140359552"|"20160006629"|"7171515").PN.	(US-PGPUB; USPAT)	OR	OFF	OFF	2018/11/26 02:07 PM
L48	32	"15237625"	(US-PGPUB; USPAT; USOCR; FPRS; EPO; JPO; DERWENT; IBM_TDB)	OR	OFF	OFF	2019/01/31 01:59 PM
L49	12163	726/23	(US-PGPUB; USPAT; USOCR; FPRS; EPO; JPO; DERWENT; IBM_TDB)	OR	OFF	OFF	2019/01/31 01:59 PM
L50	9487	726/23.ccls.	(US-PGPUB; USPAT; USOCR; FPRS; EPO; JPO; DERWENT; IBM_TDB)	OR	OFF	OFF	2019/01/31 01:59 PM
L51	32	"15237625"	(US-PGPUB; USPAT; USOCR; FPRS; EPO; JPO; DERWENT; IBM_TDB)	OR	OFF	OFF	2019/01/31 01:59 PM
L52	74	(jason near2 crabtree).inv.	(US-PGPUB; USPAT; USOCR; FPRS; EPO; JPO; DERWENT; IBM_TDB)	OR	OFF	OFF	2019/01/31 01:59 PM
L53	0	(fractal near2 industries).as.	(US-PGPUB; USPAT; USOCR; FPRS; EPO; JPO; DERWENT; IBM_TDB)	OR	OFF	OFF	2019/01/31 01:59 PM
L54	54	"14925974"	(US-PGPUB; USPAT; USOCR; FPRS; EPO; JPO; DERWENT; IBM_TDB)	OR	OFF	OFF	2019/01/31 01:59 PM
L55	0	("14925974").PN.	(US-PGPUB; USPAT; USOCR; FPRS; EPO; JPO; DERWENT; IBM_TDB)	OR	OFF	OFF	2019/01/31 01:59 PM
L56	0	("15237625").PN.	(US-PGPUB; USPAT; USOCR; FPRS; EPO; JPO; DERWENT; IBM_TDB)	OR	OFF	OFF	2019/01/31 01:59 PM

L57	18	L48 and (time series).clm.	(US-PGPUB; USPAT; USOCR; FPRS; EPO; JPO; DERWENT; IBM_TDB)	OR	OFF	OFF	2019/01/31 01:59 PM
L58	1	((predictive near2 planning) same (real near2 time near2 triage near2 analysis))	(US-PGPUB; USPAT; USOCR; FPRS; EPO; JPO; DERWENT; IBM_TDB)	OR	OFF	OFF	2019/01/31 01:59 PM
L59	3885161	((predictive near2 planning) same (real near2 time) with triage analysis)	(US-PGPUB; USPAT; USOCR; FPRS; EPO; JPO; DERWENT; IBM_TDB)	OR	OFF	OFF	2019/01/31 01:59 PM
L60	1	((predictive near2 planning) same (real near2 time) with triage with analysis)	(US-PGPUB; USPAT; USOCR; FPRS; EPO; JPO; DERWENT; IBM_TDB)	OR	OFF	OFF	2019/01/31 01:59 PM
L61	21	((real near2 time) with triage with analysis)	(US-PGPUB; USPAT; USOCR; FPRS; EPO; JPO; DERWENT; IBM_TDB)	OR	OFF	OFF	2019/01/31 01:59 PM
L62	0	L61 and (predicitve near2 planning)	(US-PGPUB; USPAT; USOCR; FPRS; EPO; JPO; DERWENT; IBM_TDB)	OR	OFF	OFF	2019/01/31 01:59 PM
L63	1	L61 and (cyber near3 attack$5)	(US-PGPUB; USPAT; USOCR; FPRS; EPO; JPO; DERWENT; IBM_TDB)	OR	OFF	OFF	2019/01/31 01:59 PM
L64	1	L61 and (cybersecurity)	(US-PGPUB; USPAT; USOCR; FPRS; EPO; JPO; DERWENT; IBM_TDB)	OR	OFF	OFF	2019/01/31 01:59 PM
L65	1	L61 and (cyber$1security)	(US-PGPUB; USPAT; USOCR; FPRS; EPO; JPO; DERWENT; IBM_TDB)	OR	OFF	OFF	2019/01/31 01:59 PM
L66	0	(predicitve near2 planning)	(US-PGPUB; USPAT; USOCR; FPRS; EPO; JPO; DERWENT; IBM_TDB)	OR	OFF	OFF	2019/01/31 01:59 PM
L67	646	(predictive near2 planning)	(US-PGPUB; USPAT; USOCR; FPRS; EPO; JPO; DERWENT; IBM_TDB)	OR	OFF	OFF	2019/01/31 01:59 PM
L68	5	L67 and (cyber$1security)	(US-PGPUB; USPAT; USOCR; FPRS; EPO; JPO; DERWENT; IBM_TDB)	OR	OFF	OFF	2019/01/31 01:59 PM
L69	5	L68 AND ((G06Q30/0202 OR G06Q40/04 OR G06Q10/0637 OR G06Q10/067 OR G06Q30/0201 OR	(US-PGPUB; USPAT; USOCR; FPRS; EPO; JPO; DERWENT; IBM_TDB)	OR	OFF	OFF	2019/01/31 01:59 PM

		G06Q30/0205 OR G06Q40/06 OR G06Q40/08 OR G06N5/04 OR G06N7/005 OR G06N99/005 OR H04L63/1425 OR H04L63/1441).CPC.)					
L70	8322	726/2.ccls.	(US-PGPUB; USPAT; USOCR; FPRS; EPO; JPO; DERWENT; IBM_TDB)	OR	OFF	OFF	2019/01/31 01:59 PM
L71	2948	726/21.ccls.	(US-PGPUB; USPAT; USOCR; FPRS; EPO; JPO; DERWENT; IBM_TDB)	OR	OFF	OFF	2019/01/31 01:59 PM
L72	365	726/36.ccls.	(US-PGPUB; USPAT; USOCR; FPRS; EPO; JPO; DERWENT; IBM_TDB)	OR	OFF	OFF	2019/01/31 01:59 PM
L73	5033	713/150.ccls.	(US-PGPUB; USPAT; USOCR; FPRS; EPO; JPO; DERWENT; IBM_TDB)	OR	OFF	OFF	2019/01/31 01:59 PM
L74	938	713/163.ccls.	(US-PGPUB; USPAT; USOCR; FPRS; EPO; JPO; DERWENT; IBM_TDB)	OR	OFF	OFF	2019/01/31 01:59 PM
L75	1772	713/181.ccls.	(US-PGPUB; USPAT; USOCR; FPRS; EPO; JPO; DERWENT; IBM_TDB)	OR	OFF	OFF	2019/01/31 01:59 PM
L76	3084	380/255.ccls.	(US-PGPUB; USPAT; USOCR; FPRS; EPO; JPO; DERWENT; IBM_TDB)	OR	OFF	OFF	2019/01/31 01:59 PM
L77	354	380/264.ccls.	(US-PGPUB; USPAT; USOCR; FPRS; EPO; JPO; DERWENT; IBM_TDB)	OR	OFF	OFF	2019/01/31 01:59 PM
L78	134	380/276.ccls.	(US-PGPUB; USPAT; USOCR; FPRS; EPO; JPO; DERWENT; IBM_TDB)	OR	OFF	OFF	2019/01/31 01:59 PM
L79	0	L68 and L70	(US-PGPUB; USPAT; USOCR; FPRS; EPO; JPO; DERWENT; IBM_TDB)	OR	OFF	OFF	2019/01/31 01:59 PM
L80	0	L68 and L71	(US-PGPUB; USPAT; USOCR; FPRS; EPO; JPO; DERWENT; IBM_TDB)	OR	OFF	OFF	2019/01/31 01:59 PM
L81	0	L68 and L72	(US-PGPUB; USPAT; USOCR; FPRS; EPO;	OR	OFF	OFF	2019/01/31 01:59 PM

			JPO; DERWENT; IBM_TDB)				
L82	0	L68 and L73	(US-PGPUB; USPAT; USOCR; FPRS; EPO; JPO; DERWENT; IBM_TDB)	OR	OFF	OFF	2019/01/31 01:59 PM
L83	0	L68 and L74	(US-PGPUB; USPAT; USOCR; FPRS; EPO; JPO; DERWENT; IBM_TDB)	OR	OFF	OFF	2019/01/31 01:59 PM
L84	0	L68 and L75	(US-PGPUB; USPAT; USOCR; FPRS; EPO; JPO; DERWENT; IBM_TDB)	OR	OFF	OFF	2019/01/31 01:59 PM
L85	0	L68 and L76	(US-PGPUB; USPAT; USOCR; FPRS; EPO; JPO; DERWENT; IBM_TDB)	OR	OFF	OFF	2019/01/31 01:59 PM
L86	0	L68 and L77	(US-PGPUB; USPAT; USOCR; FPRS; EPO; JPO; DERWENT; IBM_TDB)	OR	OFF	OFF	2019/01/31 01:59 PM
L87	0	L68 and L78	(US-PGPUB; USPAT; USOCR; FPRS; EPO; JPO; DERWENT; IBM_TDB)	OR	OFF	OFF	2019/01/31 01:59 PM
L88	4	("20050000165"|"20140359552"|"20160006629"|"7171515").PN.	(US-PGPUB; USPAT)	OR	OFF	OFF	2019/01/31 01:59 PM
L95	34	"15237625"	(US-PGPUB; USPAT; USOCR; FPRS; EPO; JPO; DERWENT; IBM_TDB)	OR	OFF	OFF	2019/06/21 11:40 PM
L96	12835	726/23	(US-PGPUB; USPAT; USOCR; FPRS; EPO; JPO; DERWENT; IBM_TDB)	OR	OFF	OFF	2019/06/21 11:40 PM
L97	9918	726/23.ccls.	(US-PGPUB; USPAT; USOCR; FPRS; EPO; JPO; DERWENT; IBM_TDB)	OR	OFF	OFF	2019/06/21 11:40 PM
L98	34	"15237625"	(US-PGPUB; USPAT; USOCR; FPRS; EPO; JPO; DERWENT; IBM_TDB)	OR	OFF	OFF	2019/06/21 11:40 PM
L99	88	(jason near2 crabtree).inv.	(US-PGPUB; USPAT; USOCR; FPRS; EPO; JPO; DERWENT; IBM_TDB)	OR	OFF	OFF	2019/06/21 11:40 PM
L100	4	(fractal near2 industries).as.	(US-PGPUB; USPAT; USOCR; FPRS; EPO; JPO; DERWENT; IBM_TDB)	OR	OFF	OFF	2019/06/21 11:40 PM

L101	56	"14925974"	(US-PGPUB; USPAT; USOCR; FPRS; EPO; JPO; DERWENT; IBM_TDB)	OR	OFF	OFF	2019/06/21 11:40 PM
L102	0	("14925974").PN.	(US-PGPUB; USPAT; USOCR; FPRS; EPO; JPO; DERWENT; IBM_TDB)	OR	OFF	OFF	2019/06/21 11:40 PM
L103	0	("15237625").PN.	(US-PGPUB; USPAT; USOCR; FPRS; EPO; JPO; DERWENT; IBM_TDB)	OR	OFF	OFF	2019/06/21 11:40 PM
L104	20	L95 and (time series).clm.	(US-PGPUB; USPAT; USOCR; FPRS; EPO; JPO; DERWENT; IBM_TDB)	OR	OFF	OFF	2019/06/21 11:40 PM
L105	2	((predictive near2 planning) same (real near2 time near2 triage near2 analysis))	(US-PGPUB; USPAT; USOCR; FPRS; EPO; JPO; DERWENT; IBM_TDB)	OR	OFF	OFF	2019/06/21 11:40 PM
L106	4018664	((predictive near2 planning) same (real near2 time) with triage analysis)	(US-PGPUB; USPAT; USOCR; FPRS; EPO; JPO; DERWENT; IBM_TDB)	OR	OFF	OFF	2019/06/21 11:40 PM
L107	2	((predictive near2 planning) same (real near2 time) with triage with analysis)	(US-PGPUB; USPAT; USOCR; FPRS; EPO; JPO; DERWENT; IBM_TDB)	OR	OFF	OFF	2019/06/21 11:40 PM
L108	23	((real near2 time) with triage with analysis)	(US-PGPUB; USPAT; USOCR; FPRS; EPO; JPO; DERWENT; IBM_TDB)	OR	OFF	OFF	2019/06/21 11:40 PM
L109	0	L108 and (predicitve near2 planning)	(US-PGPUB; USPAT; USOCR; FPRS; EPO; JPO; DERWENT; IBM_TDB)	OR	OFF	OFF	2019/06/21 11:40 PM
L110	2	L108 and (cyber near3 attack$5)	(US-PGPUB; USPAT; USOCR; FPRS; EPO; JPO; DERWENT; IBM_TDB)	OR	OFF	OFF	2019/06/21 11:40 PM
L111	2	L108 and (cybersecurity)	(US-PGPUB; USPAT; USOCR; FPRS; EPO; JPO; DERWENT; IBM_TDB)	OR	OFF	OFF	2019/06/21 11:40 PM
L112	2	L108 and (cyber$1security)	(US-PGPUB; USPAT; USOCR; FPRS; EPO; JPO; DERWENT; IBM_TDB)	OR	OFF	OFF	2019/06/21 11:40 PM
L113	0	(predicitve near2 planning)	(US-PGPUB; USPAT; USOCR; FPRS; EPO; JPO; DERWENT; IBM_TDB)	OR	OFF	OFF	2019/06/21 11:40 PM
L114	681	(predictive near2	(US-PGPUB; USPAT;	OR	OFF	OFF	2019/06/21

		planning)	USOCR; FPRS; EPO; JPO; DERWENT; IBM_TDB)				11:40 PM
L115	7	L114 and (cyber$1security)	(US-PGPUB; USPAT; USOCR; FPRS; EPO; JPO; DERWENT; IBM_TDB)	OR	OFF	OFF	2019/06/21 11:40 PM
L116	6	L115 AND ((G06Q30/0202 OR G06Q40/04 OR G06Q10/0637 OR G06Q10/067 OR G06Q30/0201 OR G06Q30/0205 OR G06Q40/06 OR G06Q40/08 OR G06N5/04 OR G06N7/005 OR G06N99/005 OR H04L63/1425 OR H04L63/1441).CPC.)	(US-PGPUB; USPAT; USOCR; FPRS; EPO; JPO; DERWENT; IBM_TDB)	OR	OFF	OFF	2019/06/21 11:40 PM
L117	8466	726/2.ccls.	(US-PGPUB; USPAT; USOCR; FPRS; EPO; JPO; DERWENT; IBM_TDB)	OR	OFF	OFF	2019/06/21 11:40 PM
L118	2992	726/21.ccls.	(US-PGPUB; USPAT; USOCR; FPRS; EPO; JPO; DERWENT; IBM_TDB)	OR	OFF	OFF	2019/06/21 11:40 PM
L119	375	726/36.ccls.	(US-PGPUB; USPAT; USOCR; FPRS; EPO; JPO; DERWENT; IBM_TDB)	OR	OFF	OFF	2019/06/21 11:40 PM
L120	5135	713/150.ccls.	(US-PGPUB; USPAT; USOCR; FPRS; EPO; JPO; DERWENT; IBM_TDB)	OR	OFF	OFF	2019/06/21 11:40 PM
L121	963	713/163.ccls.	(US-PGPUB; USPAT; USOCR; FPRS; EPO; JPO; DERWENT; IBM_TDB)	OR	OFF	OFF	2019/06/21 11:40 PM
L122	1821	713/181.ccls.	(US-PGPUB; USPAT; USOCR; FPRS; EPO; JPO; DERWENT; IBM_TDB)	OR	OFF	OFF	2019/06/21 11:40 PM
L123	3147	380/255.ccls.	(US-PGPUB; USPAT; USOCR; FPRS; EPO; JPO; DERWENT; IBM_TDB)	OR	OFF	OFF	2019/06/21 11:40 PM
L124	359	380/264.ccls.	(US-PGPUB; USPAT; USOCR; FPRS; EPO; JPO; DERWENT; IBM_TDB)	OR	OFF	OFF	2019/06/21 11:40 PM
L125	136	380/276.ccls.	(US-PGPUB; USPAT;	OR	OFF	OFF	2019/06/21

			USOCR; FPRS; EPO; JPO; DERWENT; IBM_TDB)				11:40 PM
L126	0	L115 and L117	(US-PGPUB; USPAT; USOCR; FPRS; EPO; JPO; DERWENT; IBM_TDB)	OR	OFF	OFF	2019/06/21 11:40 PM
L127	0	L115 and L118	(US-PGPUB; USPAT; USOCR; FPRS; EPO; JPO; DERWENT; IBM_TDB)	OR	OFF	OFF	2019/06/21 11:40 PM
L128	0	L115 and L119	(US-PGPUB; USPAT; USOCR; FPRS; EPO; JPO; DERWENT; IBM_TDB)	OR	OFF	OFF	2019/06/21 11:40 PM
L129	0	L115 and L120	(US-PGPUB; USPAT; USOCR; FPRS; EPO; JPO; DERWENT; IBM_TDB)	OR	OFF	OFF	2019/06/21 11:40 PM
L130	0	L115 and L121	(US-PGPUB; USPAT; USOCR; FPRS; EPO; JPO; DERWENT; IBM_TDB)	OR	OFF	OFF	2019/06/21 11:40 PM
L131	0	L115 and L122	(US-PGPUB; USPAT; USOCR; FPRS; EPO; JPO; DERWENT; IBM_TDB)	OR	OFF	OFF	2019/06/21 11:40 PM
L132	0	L115 and L123	(US-PGPUB; USPAT; USOCR; FPRS; EPO; JPO; DERWENT; IBM_TDB)	OR	OFF	OFF	2019/06/21 11:40 PM
L133	0	L115 and L124	(US-PGPUB; USPAT; USOCR; FPRS; EPO; JPO; DERWENT; IBM_TDB)	OR	OFF	OFF	2019/06/21 11:40 PM
L134	0	L115 and L125	(US-PGPUB; USPAT; USOCR; FPRS; EPO; JPO; DERWENT; IBM_TDB)	OR	OFF	OFF	2019/06/21 11:40 PM
L135	4	("20050000165"|"20140359552"|"20160006629"|"7171515").PN.	(US-PGPUB; USPAT)	OR	OFF	OFF	2019/06/21 11:40 PM
L136	34	"15237625"	(US-PGPUB; USPAT; USOCR; FPRS; EPO; JPO; DERWENT; IBM_TDB)	OR	OFF	OFF	2019/06/21 11:40 PM
L137	12835	726/23	(US-PGPUB; USPAT; USOCR; FPRS; EPO; JPO; DERWENT; IBM_TDB)	OR	OFF	OFF	2019/06/21 11:40 PM
L138	9918	726/23.ccls.	(US-PGPUB; USPAT; USOCR; FPRS; EPO; JPO; DERWENT;	OR	OFF	OFF	2019/06/21 11:40 PM

			IBM_TDB)				
L139	34	"15237625"	(US-PGPUB; USPAT; USOCR; FPRS; EPO; JPO; DERWENT; IBM_TDB)	OR	OFF	OFF	2019/06/21 11:40 PM
L140	88	(jason near2 crabtree).inv.	(US-PGPUB; USPAT; USOCR; FPRS; EPO; JPO; DERWENT; IBM_TDB)	OR	OFF	OFF	2019/06/21 11:40 PM
L141	4	(fractal near2 industries).as.	(US-PGPUB; USPAT; USOCR; FPRS; EPO; JPO; DERWENT; IBM_TDB)	OR	OFF	OFF	2019/06/21 11:40 PM
L142	56	"14925974"	(US-PGPUB; USPAT; USOCR; FPRS; EPO; JPO; DERWENT; IBM_TDB)	OR	OFF	OFF	2019/06/21 11:40 PM
L143	0	("14925974").PN.	(US-PGPUB; USPAT; USOCR; FPRS; EPO; JPO; DERWENT; IBM_TDB)	OR	OFF	OFF	2019/06/21 11:40 PM
L144	0	("15237625").PN.	(US-PGPUB; USPAT; USOCR; FPRS; EPO; JPO; DERWENT; IBM_TDB)	OR	OFF	OFF	2019/06/21 11:40 PM
L145	20	L136 and (time series).clm.	(US-PGPUB; USPAT; USOCR; FPRS; EPO; JPO; DERWENT; IBM_TDB)	OR	OFF	OFF	2019/06/21 11:40 PM
L146	2	((predictive near2 planning) same (real near2 time near2 triage near2 analysis))	(US-PGPUB; USPAT; USOCR; FPRS; EPO; JPO; DERWENT; IBM_TDB)	OR	OFF	OFF	2019/06/21 11:40 PM
L147	4018664	((predictive near2 planning) same (real near2 time) with triage analysis)	(US-PGPUB; USPAT; USOCR; FPRS; EPO; JPO; DERWENT; IBM_TDB)	OR	OFF	OFF	2019/06/21 11:40 PM
L148	2	((predictive near2 planning) same (real near2 time) with triage with analysis)	(US-PGPUB; USPAT; USOCR; FPRS; EPO; JPO; DERWENT; IBM_TDB)	OR	OFF	OFF	2019/06/21 11:40 PM
L149	23	((real near2 time) with triage with analysis)	(US-PGPUB; USPAT; USOCR; FPRS; EPO; JPO; DERWENT; IBM_TDB)	OR	OFF	OFF	2019/06/21 11:40 PM
L150	0	L149 and (predicitve near2 planning)	(US-PGPUB; USPAT; USOCR; FPRS; EPO; JPO; DERWENT; IBM_TDB)	OR	OFF	OFF	2019/06/21 11:40 PM
L151	2	L149 and (cyber near3 attack$5)	(US-PGPUB; USPAT; USOCR; FPRS; EPO; JPO; DERWENT; IBM_TDB)	OR	OFF	OFF	2019/06/21 11:40 PM

L152	2	L149 and (cybersecurity)	(US-PGPUB; USPAT; USOCR; FPRS; EPO; JPO; DERWENT; IBM_TDB)	OR	OFF	OFF	2019/06/21 11:40 PM
L153	2	L149 and (cyber$1security)	(US-PGPUB; USPAT; USOCR; FPRS; EPO; JPO; DERWENT; IBM_TDB)	OR	OFF	OFF	2019/06/21 11:40 PM
L154	0	(predicitve near2 planning)	(US-PGPUB; USPAT; USOCR; FPRS; EPO; JPO; DERWENT; IBM_TDB)	OR	OFF	OFF	2019/06/21 11:40 PM
L155	681	(predictive near2 planning)	(US-PGPUB; USPAT; USOCR; FPRS; EPO; JPO; DERWENT; IBM_TDB)	OR	OFF	OFF	2019/06/21 11:40 PM
L156	7	L155 and (cyber$1security)	(US-PGPUB; USPAT; USOCR; FPRS; EPO; JPO; DERWENT; IBM_TDB)	OR	OFF	OFF	2019/06/21 11:40 PM
L157	6	L156 AND ((G06Q30/0202 OR G06Q40/04 OR G06Q10/0637 OR G06Q10/067 OR G06Q30/0201 OR G06Q30/0205 OR G06Q40/06 OR G06Q40/08 OR G06N5/04 OR G06N7/005 OR G06N99/005 OR H04L63/1425 OR H04L63/1441).CPC.)	(US-PGPUB; USPAT; USOCR; FPRS; EPO; JPO; DERWENT; IBM_TDB)	OR	OFF	OFF	2019/06/21 11:40 PM
L158	8466	726/2.ccls.	(US-PGPUB; USPAT; USOCR; FPRS; EPO; JPO; DERWENT; IBM_TDB)	OR	OFF	OFF	2019/06/21 11:40 PM
L159	2992	726/21.ccls.	(US-PGPUB; USPAT; USOCR; FPRS; EPO; JPO; DERWENT; IBM_TDB)	OR	OFF	OFF	2019/06/21 11:40 PM
L160	375	726/36.ccls.	(US-PGPUB; USPAT; USOCR; FPRS; EPO; JPO; DERWENT; IBM_TDB)	OR	OFF	OFF	2019/06/21 11:40 PM
L161	5135	713/150.ccls.	(US-PGPUB; USPAT; USOCR; FPRS; EPO; JPO; DERWENT; IBM_TDB)	OR	OFF	OFF	2019/06/21 11:40 PM
L162	963	713/163.ccls.	(US-PGPUB; USPAT; USOCR; FPRS; EPO; JPO; DERWENT; IBM_TDB)	OR	OFF	OFF	2019/06/21 11:40 PM

L163	1821	713/181.ccls.	(US-PGPUB; USPAT; USOCR; FPRS; EPO; JPO; DERWENT; IBM_TDB)	OR	OFF	OFF	2019/06/21 11:40 PM
L164	3147	380/255.ccls.	(US-PGPUB; USPAT; USOCR; FPRS; EPO; JPO; DERWENT; IBM_TDB)	OR	OFF	OFF	2019/06/21 11:40 PM
L165	359	380/264.ccls.	(US-PGPUB; USPAT; USOCR; FPRS; EPO; JPO; DERWENT; IBM_TDB)	OR	OFF	OFF	2019/06/21 11:40 PM
L166	136	380/276.ccls.	(US-PGPUB; USPAT; USOCR; FPRS; EPO; JPO; DERWENT; IBM_TDB)	OR	OFF	OFF	2019/06/21 11:40 PM
L167	0	L156 and L158	(US-PGPUB; USPAT; USOCR; FPRS; EPO; JPO; DERWENT; IBM_TDB)	OR	OFF	OFF	2019/06/21 11:40 PM
L168	0	L156 and L159	(US-PGPUB; USPAT; USOCR; FPRS; EPO; JPO; DERWENT; IBM_TDB)	OR	OFF	OFF	2019/06/21 11:40 PM
L169	0	L156 and L160	(US-PGPUB; USPAT; USOCR; FPRS; EPO; JPO; DERWENT; IBM_TDB)	OR	OFF	OFF	2019/06/21 11:40 PM
L170	0	L156 and L161	(US-PGPUB; USPAT; USOCR; FPRS; EPO; JPO; DERWENT; IBM_TDB)	OR	OFF	OFF	2019/06/21 11:40 PM
L171	0	L156 and L162	(US-PGPUB; USPAT; USOCR; FPRS; EPO; JPO; DERWENT; IBM_TDB)	OR	OFF	OFF	2019/06/21 11:40 PM
L172	0	L156 and L163	(US-PGPUB; USPAT; USOCR; FPRS; EPO; JPO; DERWENT; IBM_TDB)	OR	OFF	OFF	2019/06/21 11:40 PM
L173	0	L156 and L164	(US-PGPUB; USPAT; USOCR; FPRS; EPO; JPO; DERWENT; IBM_TDB)	OR	OFF	OFF	2019/06/21 11:40 PM
L174	0	L156 and L165	(US-PGPUB; USPAT; USOCR; FPRS; EPO; JPO; DERWENT; IBM_TDB)	OR	OFF	OFF	2019/06/21 11:40 PM
L175	0	L156 and L166	(US-PGPUB; USPAT; USOCR; FPRS; EPO; JPO; DERWENT; IBM_TDB)	OR	OFF	OFF	2019/06/21 11:40 PM
L176	4	("20050000165"|"20140	(US-PGPUB; USPAT)	OR	OFF	OFF	2019/06/21

		359552"|"20160006629"|"7171515").PN.					11:40 PM
L177	23	L99 and (time near2 series).clm.	(US-PGPUB; USPAT; USOCR; FPRS; EPO; JPO; DERWENT; IBM_TDB)	OR	OFF	OFF	2019/06/21 11:57 PM
L178	11	L99 and ((time near2 series) with multi$dimensional).clm.	(US-PGPUB; USPAT; USOCR; FPRS; EPO; JPO; DERWENT; IBM_TDB)	OR	OFF	OFF	2019/06/21 11:57 PM
L179	2	("20160275123"|"6256544").PN.	(US-PGPUB; USPAT)	OR	OFF	OFF	2019/06/22 12:07 AM
L180	1	"15790860"	(US-PGPUB; USPAT; USOCR; FPRS; EPO; JPO; DERWENT; IBM_TDB)	OR	OFF	OFF	2019/06/22 12:16 AM
L181	6	"20150020199"	(US-PGPUB; USPAT; USOCR; FPRS; EPO; JPO; DERWENT; IBM_TDB)	OR	OFF	OFF	2019/06/22 12:17 AM
L182	8	"20160006629"	(US-PGPUB; USPAT; USOCR; FPRS; EPO; JPO; DERWENT; IBM_TDB)	OR	OFF	OFF	2019/06/22 01:08 AM
L183	3	"20140359552"	(US-PGPUB; USPAT; USOCR; FPRS; EPO; JPO; DERWENT; IBM_TDB)	OR	OFF	OFF	2019/06/22 01:09 AM
L184	7	(US-20160006629-$ or US-20140359552-$ or US-20050000165-$ or US-20160275123-$ or US-20150020199-$).did. or (US-7171515-$ or US-6256544-$).did.	(US-PGPUB; USPAT)	OR	OFF	OFF	2019/06/22 01:27 AM
L185	0	L184 and (network with traffice with monitor$5)	(US-PGPUB; USPAT; USOCR; FPRS; EPO; JPO; DERWENT; IBM_TDB)	OR	OFF	OFF	2019/06/22 01:28 AM
L186	1	L184 and (network with traffic with monitor$5)	(US-PGPUB; USPAT; USOCR; FPRS; EPO; JPO; DERWENT; IBM_TDB)	OR	OFF	OFF	2019/06/22 01:28 AM
L187	1	L184 and (network with traffic with (scan$5 or monitor$5))	(US-PGPUB; USPAT; USOCR; FPRS; EPO; JPO; DERWENT; IBM_TDB)	OR	OFF	OFF	2019/06/22 01:28 AM
L188	1	L184 and (network with (flow$1 or traffic) with (scan$5 or monitor$5))	(US-PGPUB; USPAT; USOCR; FPRS; EPO; JPO; DERWENT; IBM_TDB)	OR	OFF	OFF	2019/06/22 01:28 AM
L189	1	L184 and (network near3 (scan$5 or	(US-PGPUB; USPAT; USOCR; FPRS; EPO;	OR	OFF	OFF	2019/06/22 01:29 AM

		monitor$5))	JPO; DERWENT; IBM_TDB)				
L190	5	L184 and (baseline$1 or threshold$1 or limit$1)	(US-PGPUB; USPAT; USOCR; FPRS; EPO; JPO; DERWENT; IBM_TDB)	OR	OFF	OFF	2019/06/22 01:31 AM
L191	1	L184 and (score$1)	(US-PGPUB; USPAT; USOCR; FPRS; EPO; JPO; DERWENT; IBM_TDB)	OR	OFF	OFF	2019/06/22 01:41 AM
L192	6	"20130117852"	(US-PGPUB; USPAT; USOCR; FPRS; EPO; JPO; DERWENT; IBM_TDB)	OR	OFF	OFF	2019/06/22 01:42 AM
L193	3	"20070226796"	(US-PGPUB; USPAT; USOCR; FPRS; EPO; JPO; DERWENT; IBM_TDB)	OR	OFF	OFF	2019/06/22 01:42 AM
L194	10	(US-20160006629-$ or US-20140359552-$ or US-20050000165-$ or US-20160275123-$ or US-20150020199-$ or US-20130117852-$ or US-20070226796-$).did. or (US-7171515-$ or US-6256544-$).did. or (US-20070226796-$).did.	(US-PGPUB; USPAT; DERWENT)	OR	OFF	OFF	2019/06/22 01:42 AM
L195	2	L194 and (score$1)	(US-PGPUB; USPAT; USOCR; FPRS; EPO; JPO; DERWENT; IBM_TDB)	OR	OFF	OFF	2019/06/22 01:42 AM
L196	260473	(network near3 (monitor$5 or scan$5))	(US-PGPUB; USPAT; USOCR; FPRS; EPO; JPO; DERWENT; IBM_TDB)	OR	OFF	OFF	2019/06/22 01:44 AM
L209	260955	(network near3 (monitor$5 or scan$5))	(US-PGPUB; USPAT; USOCR; FPRS; EPO; JPO; DERWENT; IBM_TDB)	OR	OFF	OFF	2019/06/22 01:46 AM
L210	596	L209 and (score with access$6 with (resource$1 or content or application$1 or program$1))	(US-PGPUB; USPAT; USOCR; FPRS; EPO; JPO; DERWENT; IBM_TDB)	OR	OFF	OFF	2019/06/22 01:46 AM
L211	330	L210 and @ad<"20151028"	(US-PGPUB; USPAT; USOCR; FPRS; EPO; JPO; DERWENT; IBM_TDB)	OR	OFF	OFF	2019/06/22 01:46 AM
L212	7	L211 and (score with (security or threat) with level$1 with (resource$1 or content	(US-PGPUB; USPAT; USOCR; FPRS; EPO; JPO; DERWENT; IBM_TDB)	OR	OFF	OFF	2019/06/22 01:47 AM

		or application$1 or program$1))					
L213	0	L212 and (score$1 with connection)	(US-PGPUB; USPAT; USOCR; FPRS; EPO; JPO; DERWENT; IBM_TDB)	OR	OFF	OFF	2019/06/22 01:48 AM
L214	1	L212 and (score$1 with media)	(US-PGPUB; USPAT; USOCR; FPRS; EPO; JPO; DERWENT; IBM_TDB)	OR	OFF	OFF	2019/06/22 01:48 AM
L215	11	(US-20160006629-$ or US-20140359552-$ or US-20050000165-$ or US-20160275123-$ or US-20150020199-$ or US-20130117852-$ or US-20070226796-$ or US-20130111592-$).did. or (US-7171515-$ or US-6256544-$).did. or (US-20070226796-$).did.	(US-PGPUB; USPAT; DERWENT)	OR	OFF	OFF	2019/12/16 01:05 AM
L216	0	L215 and (score$1 with (verification or authentication))	(US-PGPUB; USPAT; USOCR; FPRS; EPO; JPO; DERWENT; IBM_TDB)	OR	OFF	OFF	2019/12/16 01:05 AM
L217	0	L215 and (score$1 same (verification or authentication))	(US-PGPUB; USPAT; USOCR; FPRS; EPO; JPO; DERWENT; IBM_TDB)	OR	OFF	OFF	2019/12/16 01:05 AM
L218	2	L215 and ((verification or authentication))	(US-PGPUB; USPAT; USOCR; FPRS; EPO; JPO; DERWENT; IBM_TDB)	OR	OFF	OFF	2019/12/16 01:06 AM
L219	10	L215 and (access$4 or permission$1)	(US-PGPUB; USPAT; USOCR; FPRS; EPO; JPO; DERWENT; IBM_TDB)	OR	OFF	OFF	2019/12/16 01:06 AM
L220	44	"15237625"	(US-PGPUB; USPAT; USOCR; FPRS; EPO; JPO; DERWENT; IBM_TDB)	OR	OFF	OFF	2020/03/31 02:28 PM
L221	14367	726/23	(US-PGPUB; USPAT; USOCR; FPRS; EPO; JPO; DERWENT; IBM_TDB)	OR	OFF	OFF	2020/03/31 02:28 PM
L222	9800	726/23.ccls.	(US-PGPUB; USPAT; USOCR; FPRS; EPO; JPO; DERWENT; IBM_TDB)	OR	OFF	OFF	2020/03/31 02:28 PM
L223	44	"15237625"	(US-PGPUB; USPAT; USOCR; FPRS; EPO; JPO; DERWENT; IBM_TDB)	OR	OFF	OFF	2020/03/31 02:28 PM

L224	125	(jason near2 crabtree).inv.	(US-PGPUB; USPAT; USOCR; FPRS; EPO; JPO; DERWENT; IBM_TDB)	OR	OFF	OFF	2020/03/31 02:28 PM
L225	4	(fractal near2 industries).as.	(US-PGPUB; USPAT; USOCR; FPRS; EPO; JPO; DERWENT; IBM_TDB)	OR	OFF	OFF	2020/03/31 02:28 PM
L226	68	"14925974"	(US-PGPUB; USPAT; USOCR; FPRS; EPO; JPO; DERWENT; IBM_TDB)	OR	OFF	OFF	2020/03/31 02:28 PM
L227	0	("14925974").PN.	(US-PGPUB; USPAT; USOCR; FPRS; EPO; JPO; DERWENT; IBM_TDB)	OR	OFF	OFF	2020/03/31 02:28 PM
L228	0	("15237625").PN.	(US-PGPUB; USPAT; USOCR; FPRS; EPO; JPO; DERWENT; IBM_TDB)	OR	OFF	OFF	2020/03/31 02:28 PM
L229	27	L220 and (time series).clm.	(US-PGPUB; USPAT; USOCR; FPRS; EPO; JPO; DERWENT; IBM_TDB)	OR	OFF	OFF	2020/03/31 02:28 PM
L230	2	((predictive near2 planning) same (real near2 time near2 triage near2 analysis))	(US-PGPUB; USPAT; USOCR; FPRS; EPO; JPO; DERWENT; IBM_TDB)	OR	OFF	OFF	2020/03/31 02:28 PM
L231	4322122	((predictive near2 planning) same (real near2 time) with triage analysis)	(US-PGPUB; USPAT; USOCR; FPRS; EPO; JPO; DERWENT; IBM_TDB)	OR	OFF	OFF	2020/03/31 02:28 PM
L232	2	((predictive near2 planning) same (real near2 time) with triage with analysis)	(US-PGPUB; USPAT; USOCR; FPRS; EPO; JPO; DERWENT; IBM_TDB)	OR	OFF	OFF	2020/03/31 02:28 PM
L233	25	((real near2 time) with triage with analysis)	(US-PGPUB; USPAT; USOCR; FPRS; EPO; JPO; DERWENT; IBM_TDB)	OR	OFF	OFF	2020/03/31 02:28 PM
L234	0	L233 and (predicitve near2 planning)	(US-PGPUB; USPAT; USOCR; FPRS; EPO; JPO; DERWENT; IBM_TDB)	OR	OFF	OFF	2020/03/31 02:28 PM
L235	2	L233 and (cyber near3 attack$5)	(US-PGPUB; USPAT; USOCR; FPRS; EPO; JPO; DERWENT; IBM_TDB)	OR	OFF	OFF	2020/03/31 02:28 PM
L236	2	L233 and (cybersecurity)	(US-PGPUB; USPAT; USOCR; FPRS; EPO; JPO; DERWENT; IBM_TDB)	OR	OFF	OFF	2020/03/31 02:28 PM
L237	2	L233 and	(US-PGPUB; USPAT;	OR	OFF	OFF	2020/03/31

		(cyber$1security)	USOCR; FPRS; EPO; JPO; DERWENT; IBM_TDB)				02:28 PM
L238	0	(predicitve near2 planning)	(US-PGPUB; USPAT; USOCR; FPRS; EPO; JPO; DERWENT; IBM_TDB)	OR	OFF	OFF	2020/03/31 02:28 PM
L239	748	(predictive near2 planning)	(US-PGPUB; USPAT; USOCR; FPRS; EPO; JPO; DERWENT; IBM_TDB)	OR	OFF	OFF	2020/03/31 02:28 PM
L240	8	L239 and (cyber$1security)	(US-PGPUB; USPAT; USOCR; FPRS; EPO; JPO; DERWENT; IBM_TDB)	OR	OFF	OFF	2020/03/31 02:28 PM
L241	7	L240 AND ((G06Q30/0202 OR G06Q40/04 OR G06Q10/0637 OR G06Q10/067 OR G06Q30/0201 OR G06Q30/0205 OR G06Q40/06 OR G06Q40/08 OR G06N5/04 OR G06N7/005 OR G06N99/005 OR H04L63/1425 OR H04L63/1441).CPC.)	(US-PGPUB; USPAT; USOCR; FPRS; EPO; JPO; DERWENT; IBM_TDB)	OR	OFF	OFF	2020/03/31 02:28 PM
L242	8604	726/2.ccls.	(US-PGPUB; USPAT; USOCR; FPRS; EPO; JPO; DERWENT; IBM_TDB)	OR	OFF	OFF	2020/03/31 02:28 PM
L243	3036	726/21.ccls.	(US-PGPUB; USPAT; USOCR; FPRS; EPO; JPO; DERWENT; IBM_TDB)	OR	OFF	OFF	2020/03/31 02:28 PM
L244	384	726/36.ccls.	(US-PGPUB; USPAT; USOCR; FPRS; EPO; JPO; DERWENT; IBM_TDB)	OR	OFF	OFF	2020/03/31 02:28 PM
L245	5181	713/150.ccls.	(US-PGPUB; USPAT; USOCR; FPRS; EPO; JPO; DERWENT; IBM_TDB)	OR	OFF	OFF	2020/03/31 02:28 PM
L246	973	713/163.ccls.	(US-PGPUB; USPAT; USOCR; FPRS; EPO; JPO; DERWENT; IBM_TDB)	OR	OFF	OFF	2020/03/31 02:28 PM
L247	1850	713/181.ccls.	(US-PGPUB; USPAT; USOCR; FPRS; EPO; JPO; DERWENT; IBM_TDB)	OR	OFF	OFF	2020/03/31 02:28 PM
L248	3222	380/255.ccls.	(US-PGPUB; USPAT;	OR	OFF	OFF	2020/03/31

			USOCR; FPRS; EPO; JPO; DERWENT; IBM_TDB)				02:28 PM
L249	361	380/264.ccls.	(US-PGPUB; USPAT; USOCR; FPRS; EPO; JPO; DERWENT; IBM_TDB)	OR	OFF	OFF	2020/03/31 02:28 PM
L250	137	380/276.ccls.	(US-PGPUB; USPAT; USOCR; FPRS; EPO; JPO; DERWENT; IBM_TDB)	OR	OFF	OFF	2020/03/31 02:28 PM
L251	0	L240 and L242	(US-PGPUB; USPAT; USOCR; FPRS; EPO; JPO; DERWENT; IBM_TDB)	OR	OFF	OFF	2020/03/31 02:28 PM
L252	0	L240 and L243	(US-PGPUB; USPAT; USOCR; FPRS; EPO; JPO; DERWENT; IBM_TDB)	OR	OFF	OFF	2020/03/31 02:28 PM
L253	0	L240 and L244	(US-PGPUB; USPAT; USOCR; FPRS; EPO; JPO; DERWENT; IBM_TDB)	OR	OFF	OFF	2020/03/31 02:28 PM
L254	0	L240 and L245	(US-PGPUB; USPAT; USOCR; FPRS; EPO; JPO; DERWENT; IBM_TDB)	OR	OFF	OFF	2020/03/31 02:28 PM
L255	0	L240 and L246	(US-PGPUB; USPAT; USOCR; FPRS; EPO; JPO; DERWENT; IBM_TDB)	OR	OFF	OFF	2020/03/31 02:28 PM
L256	0	L240 and L247	(US-PGPUB; USPAT; USOCR; FPRS; EPO; JPO; DERWENT; IBM_TDB)	OR	OFF	OFF	2020/03/31 02:28 PM
L257	0	L240 and L248	(US-PGPUB; USPAT; USOCR; FPRS; EPO; JPO; DERWENT; IBM_TDB)	OR	OFF	OFF	2020/03/31 02:28 PM
L258	0	L240 and L249	(US-PGPUB; USPAT; USOCR; FPRS; EPO; JPO; DERWENT; IBM_TDB)	OR	OFF	OFF	2020/03/31 02:28 PM
L259	0	L240 and L250	(US-PGPUB; USPAT; USOCR; FPRS; EPO; JPO; DERWENT; IBM_TDB)	OR	OFF	OFF	2020/03/31 02:28 PM
L260	4	("20050000165"|"20140359552"|"20160006629"|"7171515").PN.	(US-PGPUB; USPAT)	OR	OFF	OFF	2020/03/31 02:28 PM
L261	44	"15237625"	(US-PGPUB; USPAT; USOCR; FPRS; EPO; JPO; DERWENT;	OR	OFF	OFF	2020/03/31 02:28 PM

			IBM_TDB)				
L262	14367	726/23	(US-PGPUB; USPAT; USOCR; FPRS; EPO; JPO; DERWENT; IBM_TDB)	OR	OFF	OFF	2020/03/31 02:28 PM
L263	9800	726/23.ccls.	(US-PGPUB; USPAT; USOCR; FPRS; EPO; JPO; DERWENT; IBM_TDB)	OR	OFF	OFF	2020/03/31 02:28 PM
L264	44	"15237625"	(US-PGPUB; USPAT; USOCR; FPRS; EPO; JPO; DERWENT; IBM_TDB)	OR	OFF	OFF	2020/03/31 02:28 PM
L265	125	(jason near2 crabtree).inv.	(US-PGPUB; USPAT; USOCR; FPRS; EPO; JPO; DERWENT; IBM_TDB)	OR	OFF	OFF	2020/03/31 02:28 PM
L266	4	(fractal near2 industries).as.	(US-PGPUB; USPAT; USOCR; FPRS; EPO; JPO; DERWENT; IBM_TDB)	OR	OFF	OFF	2020/03/31 02:28 PM
L267	68	"14925974"	(US-PGPUB; USPAT; USOCR; FPRS; EPO; JPO; DERWENT; IBM_TDB)	OR	OFF	OFF	2020/03/31 02:28 PM
L268	0	("14925974").PN.	(US-PGPUB; USPAT; USOCR; FPRS; EPO; JPO; DERWENT; IBM_TDB)	OR	OFF	OFF	2020/03/31 02:28 PM
L269	0	("15237625").PN.	(US-PGPUB; USPAT; USOCR; FPRS; EPO; JPO; DERWENT; IBM_TDB)	OR	OFF	OFF	2020/03/31 02:28 PM
L270	27	L261 and (time series).clm.	(US-PGPUB; USPAT; USOCR; FPRS; EPO; JPO; DERWENT; IBM_TDB)	OR	OFF	OFF	2020/03/31 02:29 PM
L271	2	((predictive near2 planning) same (real near2 time near2 triage near2 analysis))	(US-PGPUB; USPAT; USOCR; FPRS; EPO; JPO; DERWENT; IBM_TDB)	OR	OFF	OFF	2020/03/31 02:29 PM
L272	4322122	((predictive near2 planning) same (real near2 time) with triage analysis)	(US-PGPUB; USPAT; USOCR; FPRS; EPO; JPO; DERWENT; IBM_TDB)	OR	OFF	OFF	2020/03/31 02:29 PM
L273	2	((predictive near2 planning) same (real near2 time) with triage with analysis)	(US-PGPUB; USPAT; USOCR; FPRS; EPO; JPO; DERWENT; IBM_TDB)	OR	OFF	OFF	2020/03/31 02:29 PM
L274	25	((real near2 time) with triage with analysis)	(US-PGPUB; USPAT; USOCR; FPRS; EPO; JPO; DERWENT; IBM_TDB)	OR	OFF	OFF	2020/03/31 02:29 PM

L275	0	L274 and (predicitve near2 planning)	(US-PGPUB; USPAT; USOCR; FPRS; EPO; JPO; DERWENT; IBM_TDB)	OR	OFF	OFF	2020/03/31 02:29 PM
L276	2	L274 and (cyber near3 attack$5)	(US-PGPUB; USPAT; USOCR; FPRS; EPO; JPO; DERWENT; IBM_TDB)	OR	OFF	OFF	2020/03/31 02:29 PM
L277	2	L274 and (cybersecurity)	(US-PGPUB; USPAT; USOCR; FPRS; EPO; JPO; DERWENT; IBM_TDB)	OR	OFF	OFF	2020/03/31 02:29 PM
L278	2	L274 and (cyber$1security)	(US-PGPUB; USPAT; USOCR; FPRS; EPO; JPO; DERWENT; IBM_TDB)	OR	OFF	OFF	2020/03/31 02:29 PM
L279	0	(predicitve near2 planning)	(US-PGPUB; USPAT; USOCR; FPRS; EPO; JPO; DERWENT; IBM_TDB)	OR	OFF	OFF	2020/03/31 02:29 PM
L280	748	(predictive near2 planning)	(US-PGPUB; USPAT; USOCR; FPRS; EPO; JPO; DERWENT; IBM_TDB)	OR	OFF	OFF	2020/03/31 02:29 PM
L281	8	L280 and (cyber$1security)	(US-PGPUB; USPAT; USOCR; FPRS; EPO; JPO; DERWENT; IBM_TDB)	OR	OFF	OFF	2020/03/31 02:29 PM
L282	7	L281 AND ((G06Q30/0202 OR G06Q40/04 OR G06Q10/0637 OR G06Q10/067 OR G06Q30/0201 OR G06Q30/0205 OR G06Q40/06 OR G06Q40/08 OR G06N5/04 OR G06N7/005 OR G06N99/005 OR H04L63/1425 OR H04L63/1441).CPC.)	(US-PGPUB; USPAT; USOCR; FPRS; EPO; JPO; DERWENT; IBM_TDB)	OR	OFF	OFF	2020/03/31 02:29 PM
L283	8604	726/2.ccls.	(US-PGPUB; USPAT; USOCR; FPRS; EPO; JPO; DERWENT; IBM_TDB)	OR	OFF	OFF	2020/03/31 02:29 PM
L284	3036	726/21.ccls.	(US-PGPUB; USPAT; USOCR; FPRS; EPO; JPO; DERWENT; IBM_TDB)	OR	OFF	OFF	2020/03/31 02:29 PM
L285	384	726/36.ccls.	(US-PGPUB; USPAT; USOCR; FPRS; EPO; JPO; DERWENT; IBM_TDB)	OR	OFF	OFF	2020/03/31 02:29 PM

L286	5181	713/150.ccls.	(US-PGPUB; USPAT; USOCR; FPRS; EPO; JPO; DERWENT; IBM_TDB)	OR	OFF	OFF	2020/03/31 02:29 PM
L287	973	713/163.ccls.	(US-PGPUB; USPAT; USOCR; FPRS; EPO; JPO; DERWENT; IBM_TDB)	OR	OFF	OFF	2020/03/31 02:29 PM
L288	1850	713/181.ccls.	(US-PGPUB; USPAT; USOCR; FPRS; EPO; JPO; DERWENT; IBM_TDB)	OR	OFF	OFF	2020/03/31 02:29 PM
L289	3222	380/255.ccls.	(US-PGPUB; USPAT; USOCR; FPRS; EPO; JPO; DERWENT; IBM_TDB)	OR	OFF	OFF	2020/03/31 02:29 PM
L290	361	380/264.ccls.	(US-PGPUB; USPAT; USOCR; FPRS; EPO; JPO; DERWENT; IBM_TDB)	OR	OFF	OFF	2020/03/31 02:29 PM
L291	137	380/276.ccls.	(US-PGPUB; USPAT; USOCR; FPRS; EPO; JPO; DERWENT; IBM_TDB)	OR	OFF	OFF	2020/03/31 02:29 PM
L292	0	L281 and L283	(US-PGPUB; USPAT; USOCR; FPRS; EPO; JPO; DERWENT; IBM_TDB)	OR	OFF	OFF	2020/03/31 02:29 PM
L293	0	L281 and L284	(US-PGPUB; USPAT; USOCR; FPRS; EPO; JPO; DERWENT; IBM_TDB)	OR	OFF	OFF	2020/03/31 02:29 PM
L294	0	L281 and L285	(US-PGPUB; USPAT; USOCR; FPRS; EPO; JPO; DERWENT; IBM_TDB)	OR	OFF	OFF	2020/03/31 02:29 PM
L295	0	L281 and L286	(US-PGPUB; USPAT; USOCR; FPRS; EPO; JPO; DERWENT; IBM_TDB)	OR	OFF	OFF	2020/03/31 02:29 PM
L296	0	L281 and L287	(US-PGPUB; USPAT; USOCR; FPRS; EPO; JPO; DERWENT; IBM_TDB)	OR	OFF	OFF	2020/03/31 02:29 PM
L297	0	L281 and L288	(US-PGPUB; USPAT; USOCR; FPRS; EPO; JPO; DERWENT; IBM_TDB)	OR	OFF	OFF	2020/03/31 02:29 PM
L298	0	L281 and L289	(US-PGPUB; USPAT; USOCR; FPRS; EPO; JPO; DERWENT; IBM_TDB)	OR	OFF	OFF	2020/03/31 02:29 PM
L299	0	L281 and L290	(US-PGPUB; USPAT;	OR	OFF	OFF	2020/03/31

			USOCR; FPRS; EPO; JPO; DERWENT; IBM_TDB)				02:29 PM
L300	0	L281 and L291	(US-PGPUB; USPAT; USOCR; FPRS; EPO; JPO; DERWENT; IBM_TDB)	OR	OFF	OFF	2020/03/31 02:29 PM
L301	4	("20050000165"|"20140359552"|"20160006629"|"7171515").PN.	(US-PGPUB; USPAT)	OR	OFF	OFF	2020/03/31 02:29 PM
L302	44	"15237625"	(US-PGPUB; USPAT; USOCR; FPRS; EPO; JPO; DERWENT; IBM_TDB)	OR	OFF	OFF	2020/03/31 02:29 PM
L303	14367	726/23	(US-PGPUB; USPAT; USOCR; FPRS; EPO; JPO; DERWENT; IBM_TDB)	OR	OFF	OFF	2020/03/31 02:29 PM
L304	9800	726/23.ccls.	(US-PGPUB; USPAT; USOCR; FPRS; EPO; JPO; DERWENT; IBM_TDB)	OR	OFF	OFF	2020/03/31 02:29 PM
L305	44	"15237625"	(US-PGPUB; USPAT; USOCR; FPRS; EPO; JPO; DERWENT; IBM_TDB)	OR	OFF	OFF	2020/03/31 02:29 PM
L306	125	(jason near2 crabtree).inv.	(US-PGPUB; USPAT; USOCR; FPRS; EPO; JPO; DERWENT; IBM_TDB)	OR	OFF	OFF	2020/03/31 02:29 PM
L307	4	(fractal near2 industries).as.	(US-PGPUB; USPAT; USOCR; FPRS; EPO; JPO; DERWENT; IBM_TDB)	OR	OFF	OFF	2020/03/31 02:29 PM
L308	68	"14925974"	(US-PGPUB; USPAT; USOCR; FPRS; EPO; JPO; DERWENT; IBM_TDB)	OR	OFF	OFF	2020/03/31 02:29 PM
L309	0	("14925974").PN.	(US-PGPUB; USPAT; USOCR; FPRS; EPO; JPO; DERWENT; IBM_TDB)	OR	OFF	OFF	2020/03/31 02:29 PM
L310	0	("15237625").PN.	(US-PGPUB; USPAT; USOCR; FPRS; EPO; JPO; DERWENT; IBM_TDB)	OR	OFF	OFF	2020/03/31 02:29 PM
L311	27	L302 and (time series).clm.	(US-PGPUB; USPAT; USOCR; FPRS; EPO; JPO; DERWENT; IBM_TDB)	OR	OFF	OFF	2020/03/31 02:29 PM
L312	2	((predictive near2 planning) same (real near2 time near2 triage	(US-PGPUB; USPAT; USOCR; FPRS; EPO; JPO; DERWENT;	OR	OFF	OFF	2020/03/31 02:29 PM

		near2 analysis))	IBM_TDB)				
L313	4322122	((predictive near2 planning) same (real near2 time) with triage analysis)	(US-PGPUB; USPAT; USOCR; FPRS; EPO; JPO; DERWENT; IBM_TDB)	OR	OFF	OFF	2020/03/31 02:29 PM
L314	2	((predictive near2 planning) same (real near2 time) with triage with analysis)	(US-PGPUB; USPAT; USOCR; FPRS; EPO; JPO; DERWENT; IBM_TDB)	OR	OFF	OFF	2020/03/31 02:29 PM
L315	25	((real near2 time) with triage with analysis)	(US-PGPUB; USPAT; USOCR; FPRS; EPO; JPO; DERWENT; IBM_TDB)	OR	OFF	OFF	2020/03/31 02:29 PM
L316	0	L315 and (predicitve near2 planning)	(US-PGPUB; USPAT; USOCR; FPRS; EPO; JPO; DERWENT; IBM_TDB)	OR	OFF	OFF	2020/03/31 02:29 PM
L317	2	L315 and (cyber near3 attack$5)	(US-PGPUB; USPAT; USOCR; FPRS; EPO; JPO; DERWENT; IBM_TDB)	OR	OFF	OFF	2020/03/31 02:29 PM
L318	2	L315 and (cybersecurity)	(US-PGPUB; USPAT; USOCR; FPRS; EPO; JPO; DERWENT; IBM_TDB)	OR	OFF	OFF	2020/03/31 02:29 PM
L319	2	L315 and (cyber$1security)	(US-PGPUB; USPAT; USOCR; FPRS; EPO; JPO; DERWENT; IBM_TDB)	OR	OFF	OFF	2020/03/31 02:29 PM
L320	0	(predicitve near2 planning)	(US-PGPUB; USPAT; USOCR; FPRS; EPO; JPO; DERWENT; IBM_TDB)	OR	OFF	OFF	2020/03/31 02:29 PM
L321	748	(predictive near2 planning)	(US-PGPUB; USPAT; USOCR; FPRS; EPO; JPO; DERWENT; IBM_TDB)	OR	OFF	OFF	2020/03/31 02:29 PM
L322	8	L321 and (cyber$1security)	(US-PGPUB; USPAT; USOCR; FPRS; EPO; JPO; DERWENT; IBM_TDB)	OR	OFF	OFF	2020/03/31 02:29 PM
L323	7	L322 AND ((G06Q30/0202 OR G06Q40/04 OR G06Q10/0637 OR G06Q10/067 OR G06Q30/0201 OR G06Q30/0205 OR G06Q40/06 OR G06Q40/08 OR G06N5/04 OR G06N7/005 OR G06N99/005 OR H04L63/1425 OR	(US-PGPUB; USPAT; USOCR; FPRS; EPO; JPO; DERWENT; IBM_TDB)	OR	OFF	OFF	2020/03/31 02:29 PM

		H04L63/1441).CPC.)					
L324	8604	726/2.ccls.	(US-PGPUB; USPAT; USOCR; FPRS; EPO; JPO; DERWENT; IBM_TDB)	OR	OFF	OFF	2020/03/31 02:29 PM
L325	3036	726/21.ccls.	(US-PGPUB; USPAT; USOCR; FPRS; EPO; JPO; DERWENT; IBM_TDB)	OR	OFF	OFF	2020/03/31 02:29 PM
L326	384	726/36.ccls.	(US-PGPUB; USPAT; USOCR; FPRS; EPO; JPO; DERWENT; IBM_TDB)	OR	OFF	OFF	2020/03/31 02:29 PM
L327	5181	713/150.ccls.	(US-PGPUB; USPAT; USOCR; FPRS; EPO; JPO; DERWENT; IBM_TDB)	OR	OFF	OFF	2020/03/31 02:29 PM
L328	973	713/163.ccls.	(US-PGPUB; USPAT; USOCR; FPRS; EPO; JPO; DERWENT; IBM_TDB)	OR	OFF	OFF	2020/03/31 02:29 PM
L329	1850	713/181.ccls.	(US-PGPUB; USPAT; USOCR; FPRS; EPO; JPO; DERWENT; IBM_TDB)	OR	OFF	OFF	2020/03/31 02:29 PM
L330	3222	380/255.ccls.	(US-PGPUB; USPAT; USOCR; FPRS; EPO; JPO; DERWENT; IBM_TDB)	OR	OFF	OFF	2020/03/31 02:29 PM
L331	361	380/264.ccls.	(US-PGPUB; USPAT; USOCR; FPRS; EPO; JPO; DERWENT; IBM_TDB)	OR	OFF	OFF	2020/03/31 02:29 PM
L332	137	380/276.ccls.	(US-PGPUB; USPAT; USOCR; FPRS; EPO; JPO; DERWENT; IBM_TDB)	OR	OFF	OFF	2020/03/31 02:29 PM
L333	0	L322 and L324	(US-PGPUB; USPAT; USOCR; FPRS; EPO; JPO; DERWENT; IBM_TDB)	OR	OFF	OFF	2020/03/31 02:29 PM
L334	0	L322 and L325	(US-PGPUB; USPAT; USOCR; FPRS; EPO; JPO; DERWENT; IBM_TDB)	OR	OFF	OFF	2020/03/31 02:29 PM
L335	0	L322 and L326	(US-PGPUB; USPAT; USOCR; FPRS; EPO; JPO; DERWENT; IBM_TDB)	OR	OFF	OFF	2020/03/31 02:29 PM
L336	0	L322 and L327	(US-PGPUB; USPAT; USOCR; FPRS; EPO; JPO; DERWENT; IBM_TDB)	OR	OFF	OFF	2020/03/31 02:29 PM

L337	0	L322 and L328	(US-PGPUB; USPAT; USOCR; FPRS; EPO; JPO; DERWENT; IBM_TDB)	OR	OFF	OFF	2020/03/31 02:29 PM
L338	0	L322 and L329	(US-PGPUB; USPAT; USOCR; FPRS; EPO; JPO; DERWENT; IBM_TDB)	OR	OFF	OFF	2020/03/31 02:29 PM
L339	0	L322 and L330	(US-PGPUB; USPAT; USOCR; FPRS; EPO; JPO; DERWENT; IBM_TDB)	OR	OFF	OFF	2020/03/31 02:29 PM
L340	0	L322 and L331	(US-PGPUB; USPAT; USOCR; FPRS; EPO; JPO; DERWENT; IBM_TDB)	OR	OFF	OFF	2020/03/31 02:29 PM
L341	0	L322 and L332	(US-PGPUB; USPAT; USOCR; FPRS; EPO; JPO; DERWENT; IBM_TDB)	OR	OFF	OFF	2020/03/31 02:29 PM
L342	4	("20050000165"|"20140359552"|"20160006629"|"7171515").PN.	(US-PGPUB; USPAT)	OR	OFF	OFF	2020/03/31 02:29 PM
L343	44	"15237625"	(US-PGPUB; USPAT; USOCR; FPRS; EPO; JPO; DERWENT; IBM_TDB)	OR	OFF	OFF	2020/03/31 02:29 PM
L344	14367	726/23	(US-PGPUB; USPAT; USOCR; FPRS; EPO; JPO; DERWENT; IBM_TDB)	OR	OFF	OFF	2020/03/31 02:29 PM
L345	9800	726/23.ccls.	(US-PGPUB; USPAT; USOCR; FPRS; EPO; JPO; DERWENT; IBM_TDB)	OR	OFF	OFF	2020/03/31 02:29 PM
L346	44	"15237625"	(US-PGPUB; USPAT; USOCR; FPRS; EPO; JPO; DERWENT; IBM_TDB)	OR	OFF	OFF	2020/03/31 02:30 PM
L347	125	(jason near2 crabtree).inv.	(US-PGPUB; USPAT; USOCR; FPRS; EPO; JPO; DERWENT; IBM_TDB)	OR	OFF	OFF	2020/03/31 02:30 PM
L348	4	(fractal near2 industries).as.	(US-PGPUB; USPAT; USOCR; FPRS; EPO; JPO; DERWENT; IBM_TDB)	OR	OFF	OFF	2020/03/31 02:30 PM
L349	68	"14925974"	(US-PGPUB; USPAT; USOCR; FPRS; EPO; JPO; DERWENT; IBM_TDB)	OR	OFF	OFF	2020/03/31 02:30 PM
L350	0	("14925974").PN.	(US-PGPUB; USPAT; USOCR; FPRS; EPO;	OR	OFF	OFF	2020/03/31 02:30 PM

			JPO; DERWENT; IBM_TDB)				
L351	0	("15237625").PN.	(US-PGPUB; USPAT; USOCR; FPRS; EPO; JPO; DERWENT; IBM_TDB)	OR	OFF	OFF	2020/03/31 02:30 PM
L352	27	L343 and (time series).clm.	(US-PGPUB; USPAT; USOCR; FPRS; EPO; JPO; DERWENT; IBM_TDB)	OR	OFF	OFF	2020/03/31 02:30 PM
L353	2	((predictive near2 planning) same (real near2 time near2 triage near2 analysis))	(US-PGPUB; USPAT; USOCR; FPRS; EPO; JPO; DERWENT; IBM_TDB)	OR	OFF	OFF	2020/03/31 02:30 PM
L354	4322122	((predictive near2 planning) same (real near2 time) with triage analysis)	(US-PGPUB; USPAT; USOCR; FPRS; EPO; JPO; DERWENT; IBM_TDB)	OR	OFF	OFF	2020/03/31 02:30 PM
L355	2	((predictive near2 planning) same (real near2 time) with triage with analysis)	(US-PGPUB; USPAT; USOCR; FPRS; EPO; JPO; DERWENT; IBM_TDB)	OR	OFF	OFF	2020/03/31 02:30 PM
L356	25	((real near2 time) with triage with analysis)	(US-PGPUB; USPAT; USOCR; FPRS; EPO; JPO; DERWENT; IBM_TDB)	OR	OFF	OFF	2020/03/31 02:30 PM
L357	0	L356 and (predicitve near2 planning)	(US-PGPUB; USPAT; USOCR; FPRS; EPO; JPO; DERWENT; IBM_TDB)	OR	OFF	OFF	2020/03/31 02:30 PM
L358	2	L356 and (cyber near3 attack$5)	(US-PGPUB; USPAT; USOCR; FPRS; EPO; JPO; DERWENT; IBM_TDB)	OR	OFF	OFF	2020/03/31 02:30 PM
L359	2	L356 and (cybersecurity)	(US-PGPUB; USPAT; USOCR; FPRS; EPO; JPO; DERWENT; IBM_TDB)	OR	OFF	OFF	2020/03/31 02:30 PM
L360	2	L356 and (cyber$1security)	(US-PGPUB; USPAT; USOCR; FPRS; EPO; JPO; DERWENT; IBM_TDB)	OR	OFF	OFF	2020/03/31 02:30 PM
L361	0	(predicitve near2 planning)	(US-PGPUB; USPAT; USOCR; FPRS; EPO; JPO; DERWENT; IBM_TDB)	OR	OFF	OFF	2020/03/31 02:30 PM
L362	748	(predictive near2 planning)	(US-PGPUB; USPAT; USOCR; FPRS; EPO; JPO; DERWENT; IBM_TDB)	OR	OFF	OFF	2020/03/31 02:30 PM
L363	8	L362 and (cyber$1security)	(US-PGPUB; USPAT; USOCR; FPRS; EPO; JPO; DERWENT;	OR	OFF	OFF	2020/03/31 02:30 PM

			IBM_TDB)				
L364	7	L363 AND ((G06Q30/0202 OR G06Q40/04 OR G06Q10/0637 OR G06Q10/067 OR G06Q30/0201 OR G06Q30/0205 OR G06Q40/06 OR G06Q40/08 OR G06N5/04 OR G06N7/005 OR G06N99/005 OR H04L63/1425 OR H04L63/1441).CPC.)	(US-PGPUB; USPAT; USOCR; FPRS; EPO; JPO; DERWENT; IBM_TDB)	OR	OFF	OFF	2020/03/31 02:30 PM
L365	8604	726/2.ccls.	(US-PGPUB; USPAT; USOCR; FPRS; EPO; JPO; DERWENT; IBM_TDB)	OR	OFF	OFF	2020/03/31 02:30 PM
L366	3036	726/21.ccls.	(US-PGPUB; USPAT; USOCR; FPRS; EPO; JPO; DERWENT; IBM_TDB)	OR	OFF	OFF	2020/03/31 02:30 PM
L367	384	726/36.ccls.	(US-PGPUB; USPAT; USOCR; FPRS; EPO; JPO; DERWENT; IBM_TDB)	OR	OFF	OFF	2020/03/31 02:30 PM
L368	5181	713/150.ccls.	(US-PGPUB; USPAT; USOCR; FPRS; EPO; JPO; DERWENT; IBM_TDB)	OR	OFF	OFF	2020/03/31 02:30 PM
L369	973	713/163.ccls.	(US-PGPUB; USPAT; USOCR; FPRS; EPO; JPO; DERWENT; IBM_TDB)	OR	OFF	OFF	2020/03/31 02:30 PM
L370	1850	713/181.ccls.	(US-PGPUB; USPAT; USOCR; FPRS; EPO; JPO; DERWENT; IBM_TDB)	OR	OFF	OFF	2020/03/31 02:30 PM
L371	3222	380/255.ccls.	(US-PGPUB; USPAT; USOCR; FPRS; EPO; JPO; DERWENT; IBM_TDB)	OR	OFF	OFF	2020/03/31 02:30 PM
L372	361	380/264.ccls.	(US-PGPUB; USPAT; USOCR; FPRS; EPO; JPO; DERWENT; IBM_TDB)	OR	OFF	OFF	2020/03/31 02:30 PM
L373	137	380/276.ccls.	(US-PGPUB; USPAT; USOCR; FPRS; EPO; JPO; DERWENT; IBM_TDB)	OR	OFF	OFF	2020/03/31 02:30 PM
L374	0	L363 and L365	(US-PGPUB; USPAT; USOCR; FPRS; EPO; JPO; DERWENT;	OR	OFF	OFF	2020/03/31 02:30 PM

			IBM_TDB)				
L375	0	L363 and L366	(US-PGPUB; USPAT; USOCR; FPRS; EPO; JPO; DERWENT; IBM_TDB)	OR	OFF	OFF	2020/03/31 02:30 PM
L376	0	L363 and L367	(US-PGPUB; USPAT; USOCR; FPRS; EPO; JPO; DERWENT; IBM_TDB)	OR	OFF	OFF	2020/03/31 02:30 PM
L377	0	L363 and L368	(US-PGPUB; USPAT; USOCR; FPRS; EPO; JPO; DERWENT; IBM_TDB)	OR	OFF	OFF	2020/03/31 02:30 PM
L378	0	L363 and L369	(US-PGPUB; USPAT; USOCR; FPRS; EPO; JPO; DERWENT; IBM_TDB)	OR	OFF	OFF	2020/03/31 02:30 PM
L379	0	L363 and L370	(US-PGPUB; USPAT; USOCR; FPRS; EPO; JPO; DERWENT; IBM_TDB)	OR	OFF	OFF	2020/03/31 02:30 PM
L380	0	L363 and L371	(US-PGPUB; USPAT; USOCR; FPRS; EPO; JPO; DERWENT; IBM_TDB)	OR	OFF	OFF	2020/03/31 02:30 PM
L381	0	L363 and L372	(US-PGPUB; USPAT; USOCR; FPRS; EPO; JPO; DERWENT; IBM_TDB)	OR	OFF	OFF	2020/03/31 02:30 PM
L382	0	L363 and L373	(US-PGPUB; USPAT; USOCR; FPRS; EPO; JPO; DERWENT; IBM_TDB)	OR	OFF	OFF	2020/03/31 02:30 PM
L383	4	("20050000165"|"20140359552"|"20160006629"|"7171515").PN.	(US-PGPUB; USPAT)	OR	OFF	OFF	2020/03/31 02:30 PM
L384	30	L306 and (time near2 series).clm.	(US-PGPUB; USPAT; USOCR; FPRS; EPO; JPO; DERWENT; IBM_TDB)	OR	OFF	OFF	2020/03/31 02:30 PM
L385	13	L306 and ((time near2 series) with multi$dimensional).clm.	(US-PGPUB; USPAT; USOCR; FPRS; EPO; JPO; DERWENT; IBM_TDB)	OR	OFF	OFF	2020/03/31 02:30 PM
L386	2	("20160275123"|"6256544").PN.	(US-PGPUB; USPAT)	OR	OFF	OFF	2020/03/31 02:30 PM
L387	1	"15790860"	(US-PGPUB; USPAT; USOCR; FPRS; EPO; JPO; DERWENT; IBM_TDB)	OR	OFF	OFF	2020/03/31 02:30 PM
L388	6	"20150020199"	(US-PGPUB; USPAT; USOCR; FPRS; EPO; JPO; DERWENT;	OR	OFF	OFF	2020/03/31 02:30 PM

			IBM_TDB)				
L389	8	"20160006629"	(US-PGPUB; USPAT; USOCR; FPRS; EPO; JPO; DERWENT; IBM_TDB)	OR	OFF	OFF	2020/03/31 02:30 PM
L390	3	"20140359552"	(US-PGPUB; USPAT; USOCR; FPRS; EPO; JPO; DERWENT; IBM_TDB)	OR	OFF	OFF	2020/03/31 02:30 PM
L391	7	(US-20160006629-$ or US-20140359552-$ or US-20050000165-$ or US-20160275123-$ or US-20150020199-$).did. or (US-7171515-$ or US-6256544-$).did.	(US-PGPUB; USPAT)	OR	OFF	OFF	2020/03/31 02:30 PM
L392	0	L391 and (network with traffice with monitor$5)	(US-PGPUB; USPAT; USOCR; FPRS; EPO; JPO; DERWENT; IBM_TDB)	OR	OFF	OFF	2020/03/31 02:30 PM
L393	1	L391 and (network with traffic with monitor$5)	(US-PGPUB; USPAT; USOCR; FPRS; EPO; JPO; DERWENT; IBM_TDB)	OR	OFF	OFF	2020/03/31 02:30 PM
L394	1	L391 and (network with traffic with (scan$5 or monitor$5))	(US-PGPUB; USPAT; USOCR; FPRS; EPO; JPO; DERWENT; IBM_TDB)	OR	OFF	OFF	2020/03/31 02:30 PM
L395	1	L391 and (network with (flow$1 or traffic) with (scan$5 or monitor$5))	(US-PGPUB; USPAT; USOCR; FPRS; EPO; JPO; DERWENT; IBM_TDB)	OR	OFF	OFF	2020/03/31 02:30 PM
L396	1	L391 and (network near3 (scan$5 or monitor$5))	(US-PGPUB; USPAT; USOCR; FPRS; EPO; JPO; DERWENT; IBM_TDB)	OR	OFF	OFF	2020/03/31 02:30 PM
L397	5	L391 and (baseline$1 or threshold$1 or limit$1)	(US-PGPUB; USPAT; USOCR; FPRS; EPO; JPO; DERWENT; IBM_TDB)	OR	OFF	OFF	2020/03/31 02:30 PM
L398	1	L391 and (score$1)	(US-PGPUB; USPAT; USOCR; FPRS; EPO; JPO; DERWENT; IBM_TDB)	OR	OFF	OFF	2020/03/31 02:30 PM
L399	6	"20130117852"	(US-PGPUB; USPAT; USOCR; FPRS; EPO; JPO; DERWENT; IBM_TDB)	OR	OFF	OFF	2020/03/31 02:30 PM
L400	3	"20070226796"	(US-PGPUB; USPAT; USOCR; FPRS; EPO; JPO; DERWENT; IBM_TDB)	OR	OFF	OFF	2020/03/31 02:30 PM
L401	10	(US-20160006629-$ or	(US-PGPUB; USPAT;	OR	OFF	OFF	2020/03/31

		US-20140359552-$ or US-20050000165-$ or US-20160275123-$ or US-20150020199-$ or US-20130117852-$ or US-20070226796-$).did. or (US-7171515-$ or US-6256544-$).did. or (US-20070226796-$).did.	DERWENT)				02:30 PM
L402	2	L401 and (score$1)	(US-PGPUB; USPAT; USOCR; FPRS; EPO; JPO; DERWENT; IBM_TDB)	OR	OFF	OFF	2020/03/31 02:30 PM
L403	288969	(network near3 (monitor$5 or scan$5))	(US-PGPUB; USPAT; USOCR; FPRS; EPO; JPO; DERWENT; IBM_TDB)	OR	OFF	OFF	2020/03/31 02:31 PM
L404	288969	(network near3 (monitor$5 or scan$5))	(US-PGPUB; USPAT; USOCR; FPRS; EPO; JPO; DERWENT; IBM_TDB)	OR	OFF	OFF	2020/03/31 02:31 PM
L405	703	L404 and (score with access$6 with (resource$1 or content or application$1 or program$1))	(US-PGPUB; USPAT; USOCR; FPRS; EPO; JPO; DERWENT; IBM_TDB)	OR	OFF	OFF	2020/03/31 02:31 PM
L406	338	L405 and @ad<"20151028"	(US-PGPUB; USPAT; USOCR; FPRS; EPO; JPO; DERWENT; IBM_TDB)	OR	OFF	OFF	2020/03/31 02:31 PM
L407	7	L406 and (score with (security or threat) with level$1 with (resource$1 or content or application$1 or program$1))	(US-PGPUB; USPAT; USOCR; FPRS; EPO; JPO; DERWENT; IBM_TDB)	OR	OFF	OFF	2020/03/31 02:31 PM
L408	0	L407 and (score$1 with connection)	(US-PGPUB; USPAT; USOCR; FPRS; EPO; JPO; DERWENT; IBM_TDB)	OR	OFF	OFF	2020/03/31 02:31 PM
L409	1	L407 and (score$1 with media)	(US-PGPUB; USPAT; USOCR; FPRS; EPO; JPO; DERWENT; IBM_TDB)	OR	OFF	OFF	2020/03/31 02:31 PM
L410	11	(US-20160006629-$ or US-20140359552-$ or US-20050000165-$ or US-20160275123-$ or US-20150020199-$ or US-20130117852-$ or US-20070226796-$ or US-20130111592-$).did. or (US-7171515-$ or US-6256544-$).did.	(US-PGPUB; USPAT; DERWENT)	OR	OFF	OFF	2020/03/31 02:31 PM

		or (US-20070226796-$).did.					
L411	0	L410 and (score$1 with (verification or authentication))	(US-PGPUB; USPAT; USOCR; FPRS; EPO; JPO; DERWENT; IBM_TDB)	OR	OFF	OFF	2020/03/31 02:31 PM
L412	0	L410 and (score$1 same (verification or authentication))	(US-PGPUB; USPAT; USOCR; FPRS; EPO; JPO; DERWENT; IBM_TDB)	OR	OFF	OFF	2020/03/31 02:31 PM
L413	2	L410 and ((verification or authentication))	(US-PGPUB; USPAT; USOCR; FPRS; EPO; JPO; DERWENT; IBM_TDB)	OR	OFF	OFF	2020/03/31 02:31 PM
L414	10	L410 and (access$4 or permission$1)	(US-PGPUB; USPAT; USOCR; FPRS; EPO; JPO; DERWENT; IBM_TDB)	OR	OFF	OFF	2020/03/31 02:31 PM
L415	1	"15790860"	(US-PGPUB; USPAT; USOCR; FPRS; EPO; JPO; DERWENT; IBM_TDB)	OR	OFF	OFF	2020/03/31 02:39 PM
L416	14367	726/23	(US-PGPUB; USPAT; USOCR; FPRS; EPO; JPO; DERWENT; IBM_TDB)	OR	OFF	OFF	2020/03/31 02:40 PM
L417	9800	726/23.ccls.	(US-PGPUB; USPAT; USOCR; FPRS; EPO; JPO; DERWENT; IBM_TDB)	OR	OFF	OFF	2020/03/31 02:40 PM
L418	44	"15237625"	(US-PGPUB; USPAT; USOCR; FPRS; EPO; JPO; DERWENT; IBM_TDB)	OR	OFF	OFF	2020/03/31 02:40 PM
L419	125	(jason near2 crabtree).inv.	(US-PGPUB; USPAT; USOCR; FPRS; EPO; JPO; DERWENT; IBM_TDB)	OR	OFF	OFF	2020/03/31 02:40 PM
L420	4	(fractal near2 industries).as.	(US-PGPUB; USPAT; USOCR; FPRS; EPO; JPO; DERWENT; IBM_TDB)	OR	OFF	OFF	2020/03/31 02:40 PM
L421	68	"14925974"	(US-PGPUB; USPAT; USOCR; FPRS; EPO; JPO; DERWENT; IBM_TDB)	OR	OFF	OFF	2020/03/31 02:40 PM
L422	0	("14925974").PN.	(US-PGPUB; USPAT; USOCR; FPRS; EPO; JPO; DERWENT; IBM_TDB)	OR	OFF	OFF	2020/03/31 02:40 PM
L423	0	("15237625").PN.	(US-PGPUB; USPAT; USOCR; FPRS; EPO; JPO; DERWENT;	OR	OFF	OFF	2020/03/31 02:40 PM

			IBM_TDB)				
L424	2	((predictive near2 planning) same (real near2 time near2 triage near2 analysis))	(US-PGPUB; USPAT; USOCR; FPRS; EPO; JPO; DERWENT; IBM_TDB)	OR	OFF	OFF	2020/03/31 02:40 PM
L425	4322122	((predictive near2 planning) same (real near2 time) with triage analysis)	(US-PGPUB; USPAT; USOCR; FPRS; EPO; JPO; DERWENT; IBM_TDB)	OR	OFF	OFF	2020/03/31 02:40 PM
L426	2	((predictive near2 planning) same (real near2 time) with triage with analysis)	(US-PGPUB; USPAT; USOCR; FPRS; EPO; JPO; DERWENT; IBM_TDB)	OR	OFF	OFF	2020/03/31 02:40 PM
L427	25	((real near2 time) with triage with analysis)	(US-PGPUB; USPAT; USOCR; FPRS; EPO; JPO; DERWENT; IBM_TDB)	OR	OFF	OFF	2020/03/31 02:40 PM
L428	0	L233 and (predicitve near2 planning)	(US-PGPUB; USPAT; USOCR; FPRS; EPO; JPO; DERWENT; IBM_TDB)	OR	OFF	OFF	2020/03/31 02:40 PM
L429	2	L233 and (cyber near3 attack$5)	(US-PGPUB; USPAT; USOCR; FPRS; EPO; JPO; DERWENT; IBM_TDB)	OR	OFF	OFF	2020/03/31 02:40 PM
L430	2	L233 and (cybersecurity)	(US-PGPUB; USPAT; USOCR; FPRS; EPO; JPO; DERWENT; IBM_TDB)	OR	OFF	OFF	2020/03/31 02:40 PM
L431	0	(predicitve near2 planning)	(US-PGPUB; USPAT; USOCR; FPRS; EPO; JPO; DERWENT; IBM_TDB)	OR	OFF	OFF	2020/03/31 02:40 PM
L432	748	(predictive near2 planning)	(US-PGPUB; USPAT; USOCR; FPRS; EPO; JPO; DERWENT; IBM_TDB)	OR	OFF	OFF	2020/03/31 02:40 PM
L433	8	L239 and (cyber$1security)	(US-PGPUB; USPAT; USOCR; FPRS; EPO; JPO; DERWENT; IBM_TDB)	OR	OFF	OFF	2020/03/31 02:40 PM
L434	7	L240 AND ((G06Q30/0202 OR G06Q40/04 OR G06Q10/0637 OR G06Q10/067 OR G06Q30/0201 OR G06Q30/0205 OR G06Q40/06 OR G06Q40/08 OR G06N5/04 OR G06N7/005 OR G06N99/005 OR H04L63/1425 OR	(US-PGPUB; USPAT; USOCR; FPRS; EPO; JPO; DERWENT; IBM_TDB)	OR	OFF	OFF	2020/03/31 02:40 PM

		H04L63/1441).CPC.)					
L435	8604	726/2.ccls.	(US-PGPUB; USPAT; USOCR; FPRS; EPO; JPO; DERWENT; IBM_TDB)	OR	OFF	OFF	2020/03/31 02:40 PM
L436	3036	726/21.ccls.	(US-PGPUB; USPAT; USOCR; FPRS; EPO; JPO; DERWENT; IBM_TDB)	OR	OFF	OFF	2020/03/31 02:40 PM
L437	384	726/36.ccls.	(US-PGPUB; USPAT; USOCR; FPRS; EPO; JPO; DERWENT; IBM_TDB)	OR	OFF	OFF	2020/03/31 02:40 PM
L438	5181	713/150.ccls.	(US-PGPUB; USPAT; USOCR; FPRS; EPO; JPO; DERWENT; IBM_TDB)	OR	OFF	OFF	2020/03/31 02:40 PM
L439	973	713/163.ccls.	(US-PGPUB; USPAT; USOCR; FPRS; EPO; JPO; DERWENT; IBM_TDB)	OR	OFF	OFF	2020/03/31 02:40 PM
L440	1850	713/181.ccls.	(US-PGPUB; USPAT; USOCR; FPRS; EPO; JPO; DERWENT; IBM_TDB)	OR	OFF	OFF	2020/03/31 02:40 PM
L441	3222	380/255.ccls.	(US-PGPUB; USPAT; USOCR; FPRS; EPO; JPO; DERWENT; IBM_TDB)	OR	OFF	OFF	2020/03/31 02:40 PM
L442	361	380/264.ccls.	(US-PGPUB; USPAT; USOCR; FPRS; EPO; JPO; DERWENT; IBM_TDB)	OR	OFF	OFF	2020/03/31 02:40 PM
L443	137	380/276.ccls.	(US-PGPUB; USPAT; USOCR; FPRS; EPO; JPO; DERWENT; IBM_TDB)	OR	OFF	OFF	2020/03/31 02:40 PM
L444	0	L240 and L242	(US-PGPUB; USPAT; USOCR; FPRS; EPO; JPO; DERWENT; IBM_TDB)	OR	OFF	OFF	2020/03/31 02:40 PM
L445	0	L240 and L243	(US-PGPUB; USPAT; USOCR; FPRS; EPO; JPO; DERWENT; IBM_TDB)	OR	OFF	OFF	2020/03/31 02:40 PM
L446	0	L240 and L244	(US-PGPUB; USPAT; USOCR; FPRS; EPO; JPO; DERWENT; IBM_TDB)	OR	OFF	OFF	2020/03/31 02:40 PM
L447	0	L240 and L245	(US-PGPUB; USPAT; USOCR; FPRS; EPO; JPO; DERWENT; IBM_TDB)	OR	OFF	OFF	2020/03/31 02:40 PM

L448	0	L240 and L246	(US-PGPUB; USPAT; USOCR; FPRS; EPO; JPO; DERWENT; IBM_TDB)	OR	OFF	OFF	2020/03/31 02:40 PM
L449	0	L240 and L247	(US-PGPUB; USPAT; USOCR; FPRS; EPO; JPO; DERWENT; IBM_TDB)	OR	OFF	OFF	2020/03/31 02:40 PM
L450	0	L240 and L248	(US-PGPUB; USPAT; USOCR; FPRS; EPO; JPO; DERWENT; IBM_TDB)	OR	OFF	OFF	2020/03/31 02:40 PM
L451	0	L240 and L249	(US-PGPUB; USPAT; USOCR; FPRS; EPO; JPO; DERWENT; IBM_TDB)	OR	OFF	OFF	2020/03/31 02:40 PM
L452	0	L240 and L250	(US-PGPUB; USPAT; USOCR; FPRS; EPO; JPO; DERWENT; IBM_TDB)	OR	OFF	OFF	2020/03/31 02:40 PM
L453	14367	726/23	(US-PGPUB; USPAT; USOCR; FPRS; EPO; JPO; DERWENT; IBM_TDB)	OR	OFF	OFF	2020/03/31 02:40 PM
L454	9800	726/23.ccls.	(US-PGPUB; USPAT; USOCR; FPRS; EPO; JPO; DERWENT; IBM_TDB)	OR	OFF	OFF	2020/03/31 02:40 PM
L455	44	"15237625"	(US-PGPUB; USPAT; USOCR; FPRS; EPO; JPO; DERWENT; IBM_TDB)	OR	OFF	OFF	2020/03/31 02:40 PM
L456	125	(jason near2 crabtree).inv.	(US-PGPUB; USPAT; USOCR; FPRS; EPO; JPO; DERWENT; IBM_TDB)	OR	OFF	OFF	2020/03/31 02:40 PM
L457	4	(fractal near2 industries).as.	(US-PGPUB; USPAT; USOCR; FPRS; EPO; JPO; DERWENT; IBM_TDB)	OR	OFF	OFF	2020/03/31 02:40 PM
L458	68	"14925974"	(US-PGPUB; USPAT; USOCR; FPRS; EPO; JPO; DERWENT; IBM_TDB)	OR	OFF	OFF	2020/03/31 02:40 PM
L459	0	("14925974").PN.	(US-PGPUB; USPAT; USOCR; FPRS; EPO; JPO; DERWENT; IBM_TDB)	OR	OFF	OFF	2020/03/31 02:40 PM
L460	0	("15237625").PN.	(US-PGPUB; USPAT; USOCR; FPRS; EPO; JPO; DERWENT; IBM_TDB)	OR	OFF	OFF	2020/03/31 02:40 PM
L461	2	((predictive near2	(US-PGPUB; USPAT;	OR	OFF	OFF	2020/03/31

		planning) same (real near2 time near2 triage near2 analysis))	USOCR; FPRS; EPO; JPO; DERWENT; IBM_TDB)				02:40 PM
L462	4322122	((predictive near2 planning) same (real near2 time) with triage analysis)	(US-PGPUB; USPAT; USOCR; FPRS; EPO; JPO; DERWENT; IBM_TDB)	OR	OFF	OFF	2020/03/31 02:40 PM
L463	2	((predictive near2 planning) same (real near2 time) with triage with analysis)	(US-PGPUB; USPAT; USOCR; FPRS; EPO; JPO; DERWENT; IBM_TDB)	OR	OFF	OFF	2020/03/31 02:40 PM
L464	25	((real near2 time) with triage with analysis)	(US-PGPUB; USPAT; USOCR; FPRS; EPO; JPO; DERWENT; IBM_TDB)	OR	OFF	OFF	2020/03/31 02:40 PM
L465	0	L274 and (predicitve near2 planning)	(US-PGPUB; USPAT; USOCR; FPRS; EPO; JPO; DERWENT; IBM_TDB)	OR	OFF	OFF	2020/03/31 02:40 PM
L466	2	L274 and (cyber near3 attack$5)	(US-PGPUB; USPAT; USOCR; FPRS; EPO; JPO; DERWENT; IBM_TDB)	OR	OFF	OFF	2020/03/31 02:40 PM
L467	2	L274 and (cybersecurity)	(US-PGPUB; USPAT; USOCR; FPRS; EPO; JPO; DERWENT; IBM_TDB)	OR	OFF	OFF	2020/03/31 02:40 PM
L468	0	(predicitve near2 planning)	(US-PGPUB; USPAT; USOCR; FPRS; EPO; JPO; DERWENT; IBM_TDB)	OR	OFF	OFF	2020/03/31 02:40 PM
L469	748	(predictive near2 planning)	(US-PGPUB; USPAT; USOCR; FPRS; EPO; JPO; DERWENT; IBM_TDB)	OR	OFF	OFF	2020/03/31 02:40 PM
L470	8	L280 and (cyber$1security)	(US-PGPUB; USPAT; USOCR; FPRS; EPO; JPO; DERWENT; IBM_TDB)	OR	OFF	OFF	2020/03/31 02:40 PM
L471	7	L281 AND ((G06Q30/0202 OR G06Q40/04 OR G06Q10/0637 OR G06Q10/067 OR G06Q30/0201 OR G06Q30/0205 OR G06Q40/06 OR G06Q40/08 OR G06N5/04 OR G06N7/005 OR G06N99/005 OR H04L63/1425 OR H04L63/1441).CPC.)	(US-PGPUB; USPAT; USOCR; FPRS; EPO; JPO; DERWENT; IBM_TDB)	OR	OFF	OFF	2020/03/31 02:40 PM
L472	8604	726/2.ccls.	(US-PGPUB; USPAT;	OR	OFF	OFF	2020/03/31

			USOCR; FPRS; EPO; JPO; DERWENT; IBM_TDB)				02:40 PM
L473	3036	726/21.ccls.	(US-PGPUB; USPAT; USOCR; FPRS; EPO; JPO; DERWENT; IBM_TDB)	OR	OFF	OFF	2020/03/31 02:40 PM
L474	384	726/36.ccls.	(US-PGPUB; USPAT; USOCR; FPRS; EPO; JPO; DERWENT; IBM_TDB)	OR	OFF	OFF	2020/03/31 02:40 PM
L475	5181	713/150.ccls.	(US-PGPUB; USPAT; USOCR; FPRS; EPO; JPO; DERWENT; IBM_TDB)	OR	OFF	OFF	2020/03/31 02:40 PM
L476	973	713/163.ccls.	(US-PGPUB; USPAT; USOCR; FPRS; EPO; JPO; DERWENT; IBM_TDB)	OR	OFF	OFF	2020/03/31 02:40 PM
L477	1850	713/181.ccls.	(US-PGPUB; USPAT; USOCR; FPRS; EPO; JPO; DERWENT; IBM_TDB)	OR	OFF	OFF	2020/03/31 02:40 PM
L478	3222	380/255.ccls.	(US-PGPUB; USPAT; USOCR; FPRS; EPO; JPO; DERWENT; IBM_TDB)	OR	OFF	OFF	2020/03/31 02:40 PM
L479	361	380/264.ccls.	(US-PGPUB; USPAT; USOCR; FPRS; EPO; JPO; DERWENT; IBM_TDB)	OR	OFF	OFF	2020/03/31 02:40 PM
L480	137	380/276.ccls.	(US-PGPUB; USPAT; USOCR; FPRS; EPO; JPO; DERWENT; IBM_TDB)	OR	OFF	OFF	2020/03/31 02:40 PM
L481	0	L281 and L283	(US-PGPUB; USPAT; USOCR; FPRS; EPO; JPO; DERWENT; IBM_TDB)	OR	OFF	OFF	2020/03/31 02:40 PM
L482	0	L281 and L284	(US-PGPUB; USPAT; USOCR; FPRS; EPO; JPO; DERWENT; IBM_TDB)	OR	OFF	OFF	2020/03/31 02:40 PM
L483	0	L281 and L285	(US-PGPUB; USPAT; USOCR; FPRS; EPO; JPO; DERWENT; IBM_TDB)	OR	OFF	OFF	2020/03/31 02:40 PM
L484	0	L281 and L286	(US-PGPUB; USPAT; USOCR; FPRS; EPO; JPO; DERWENT; IBM_TDB)	OR	OFF	OFF	2020/03/31 02:40 PM
L485	0	L281 and L287	(US-PGPUB; USPAT; USOCR; FPRS; EPO;	OR	OFF	OFF	2020/03/31 02:40 PM

			JPO; DERWENT; IBM_TDB)				
L486	0	L281 and L288	(US-PGPUB; USPAT; USOCR; FPRS; EPO; JPO; DERWENT; IBM_TDB)	OR	OFF	OFF	2020/03/31 02:40 PM
L487	0	L281 and L289	(US-PGPUB; USPAT; USOCR; FPRS; EPO; JPO; DERWENT; IBM_TDB)	OR	OFF	OFF	2020/03/31 02:40 PM
L488	0	L281 and L290	(US-PGPUB; USPAT; USOCR; FPRS; EPO; JPO; DERWENT; IBM_TDB)	OR	OFF	OFF	2020/03/31 02:40 PM
L489	0	L281 and L291	(US-PGPUB; USPAT; USOCR; FPRS; EPO; JPO; DERWENT; IBM_TDB)	OR	OFF	OFF	2020/03/31 02:40 PM
L490	14367	726/23	(US-PGPUB; USPAT; USOCR; FPRS; EPO; JPO; DERWENT; IBM_TDB)	OR	OFF	OFF	2020/03/31 02:40 PM
L491	9800	726/23.ccls.	(US-PGPUB; USPAT; USOCR; FPRS; EPO; JPO; DERWENT; IBM_TDB)	OR	OFF	OFF	2020/03/31 02:40 PM
L492	44	"15237625"	(US-PGPUB; USPAT; USOCR; FPRS; EPO; JPO; DERWENT; IBM_TDB)	OR	OFF	OFF	2020/03/31 02:40 PM
L493	125	(jason near2 crabtree).inv.	(US-PGPUB; USPAT; USOCR; FPRS; EPO; JPO; DERWENT; IBM_TDB)	OR	OFF	OFF	2020/03/31 02:40 PM
L494	4	(fractal near2 industries).as.	(US-PGPUB; USPAT; USOCR; FPRS; EPO; JPO; DERWENT; IBM_TDB)	OR	OFF	OFF	2020/03/31 02:40 PM
L495	68	"14925974"	(US-PGPUB; USPAT; USOCR; FPRS; EPO; JPO; DERWENT; IBM_TDB)	OR	OFF	OFF	2020/03/31 02:40 PM
L496	0	("14925974").PN.	(US-PGPUB; USPAT; USOCR; FPRS; EPO; JPO; DERWENT; IBM_TDB)	OR	OFF	OFF	2020/03/31 02:40 PM
L497	0	("15237625").PN.	(US-PGPUB; USPAT; USOCR; FPRS; EPO; JPO; DERWENT; IBM_TDB)	OR	OFF	OFF	2020/03/31 02:40 PM
L498	2	((predictive near2 planning) same (real near2 time near2 triage	(US-PGPUB; USPAT; USOCR; FPRS; EPO; JPO; DERWENT;	OR	OFF	OFF	2020/03/31 02:40 PM

		near2 analysis))	IBM_TDB)				
L499	0	"18885474"	(US-PGPUB; USPAT; EPO)	OR	ON	ON	2024/11/01 05:52 PM
L500	412	(jason near2 crabtree).inv.	(US-PGPUB; USPAT; EPO)	OR	ON	ON	2024/11/01 06:04 PM
L501	45	L500 AND (receive near2 request$1).clm.	(US-PGPUB; USPAT; EPO)	OR	ON	ON	2024/11/01 06:04 PM
L502	42	L501 AND (time near2 series)	(US-PGPUB; USPAT; EPO)	OR	ON	ON	2024/11/01 06:05 PM
L503	17	L501 AND (time near2 series).clm.	(US-PGPUB; USPAT; EPO)	OR	ON	ON	2024/11/01 06:05 PM
L504	0	L500 AND (additional near2 verification).clm.	(US-PGPUB; USPAT; EPO)	OR	ON	ON	2024/11/01 06:10 PM
L505	19	L500 AND (historical).clm.	(US-PGPUB; USPAT; EPO)	OR	ON	ON	2024/11/01 06:10 PM
L506	4	L505 AND (authenticat$6).clm.	(US-PGPUB; USPAT; EPO)	OR	ON	ON	2024/11/02 04:00 PM
L507	2	"17106479"	(US-PGPUB; USPAT; EPO)	OR	ON	ON	2024/11/02 04:04 PM
L508	44	("10044726" OR "10191768" OR "10210246" OR "10216485" OR "10270748" OR "10333992" OR "10643144" OR "10846391" OR "20050165822" OR "20110307467" OR "20140324521" OR "20150319156" OR "20160006629" OR "20160012235" OR "20170090893" OR "20180082304" OR "6477572" OR "6857073" OR "7139747" OR "7227948" OR "7310632" OR "7322044" OR "7530105" OR "7546333" OR "7685296" OR "7818224" OR "7818417" OR "7925561" OR "8069190" OR "8346753" OR "8457996" OR "8751867" OR "8832840" OR "8949960" OR "9069976" OR	(US-PGPUB; USPAT)	OR	ON	ON	2024/11/02 06:34 PM

		"9110706" OR "9152727" OR "9256735" OR "9400962" OR "9466041" OR "9558220" OR "9560065" OR "9652538" OR "9774522").pn.					
L509	22	L281 AND ((G06Q30/0202 OR G06Q40/04 OR G06Q10/0637 OR G06Q10/067 OR G06Q30/0201 OR G06Q30/0205 OR G06Q40/06 OR G06Q40/08 OR G06N5/04 OR G06N7/005 OR G06N99/005 OR H04L63/1425 OR H04L63/1441 OR H04L63/0861).CPC.)	(US-PGPUB; USPAT; USOCR; FPRS; EPO; JPO; DERWENT; IBM_TDB)	OR	OFF	OFF	2024/11/02 06:39 PM
L510	44	("10044726" OR "10191768" OR "10210246" OR "10216485" OR "10270748" OR "10333992" OR "10643144" OR "10846391" OR "20050165822" OR "20110307467" OR "20140324521" OR "20150319156" OR "20160006629" OR "20160012235" OR "20170090893" OR "20180082304" OR "6477572" OR "6857073" OR "7139747" OR "7227948" OR "7310632" OR "7322044" OR "7530105" OR "7546333" OR "7685296" OR "7818224" OR "7818417" OR "7925561" OR "8069190" OR "8346753" OR "8457996" OR "8751867" OR "8832840" OR	(US-PGPUB; USPAT)	OR	ON	ON	2024/11/02 06:59 PM

		"8949960" OR "9069976" OR "9110706" OR "9152727" OR "9256735" OR "9400962" OR "9466041" OR "9558220" OR "9560065" OR "9652538" OR "9774522").pn.					

PE2E SEARCH - Search History (Interference)

Ref #	Hits	Search Query	DBs	Default Operator	Plurals	British Equivalents	Time Stamp
N42	5257	(time near2 series near2 data).clm.	(US-PGPUB; USPAT)	OR	OFF	OFF	2018/11/26 02:35 PM
N43	12	N42 and (computational near2 graph$1).clm.	(US-PGPUB; USPAT)	OR	OFF	OFF	2018/11/26 02:36 PM
N44	0	N43 and (real$time).clm.	(US-PGPUB; USPAT)	OR	OFF	OFF	2018/11/26 02:37 PM
N45	62	N42 and (network near2 traffic).clm.	(US-PGPUB; USPAT)	OR	OFF	OFF	2018/11/26 02:38 PM
N46	10	N45 and pattern.clm.	(US-PGPUB; USPAT)	OR	OFF	OFF	2018/11/26 02:38 PM
N47	14	N45 and pattern$1.clm.	(US-PGPUB; USPAT)	OR	OFF	OFF	2018/11/26 02:38 PM
N89	5390	(time near2 series near2 data).clm.	(US-PGPUB; USPAT)	OR	OFF	OFF	2019/01/31 01:59 PM
N90	12	N89 and (computational near2 graph$1).clm.	(US-PGPUB; USPAT)	OR	OFF	OFF	2019/01/31 01:59 PM
N91	0	N90 and (real$time).clm.	(US-PGPUB; USPAT)	OR	OFF	OFF	2019/01/31 01:59 PM
N92	66	N89 and (network near2 traffic).clm.	(US-PGPUB; USPAT)	OR	OFF	OFF	2019/01/31 01:59 PM
N93	11	N92 and pattern.clm.	(US-PGPUB; USPAT)	OR	OFF	OFF	2019/01/31 01:59 PM
N94	15	N92 and pattern$1.clm.	(US-PGPUB; USPAT)	OR	OFF	OFF	2019/01/31 01:59 PM
N197	5699	(time near2 series near2 data).clm.	(US-PGPUB; USPAT)	OR	OFF	OFF	2019/06/21 11:40 PM
N198	13	N197 and (computational near2 graph$1).clm.	(US-PGPUB; USPAT)	OR	OFF	OFF	2019/06/21 11:40 PM
N199	1	N198 and (real$time).clm.	(US-PGPUB; USPAT)	OR	OFF	OFF	2019/06/21 11:40 PM
N200	73	N197 and (network near2 traffic).clm.	(US-PGPUB; USPAT)	OR	OFF	OFF	2019/06/21 11:40 PM
N201	12	N200 and pattern.clm.	(US-PGPUB; USPAT)	OR	OFF	OFF	2019/06/21 11:40 PM

N202	17	N200 and pattern$1.clm.	(US-PGPUB; USPAT)	OR	OFF	OFF	2019/06/21 11:40 PM
N203	5699	(time near2 series near2 data).clm.	(US-PGPUB; USPAT)	OR	OFF	OFF	2019/06/21 11:40 PM
N204	13	N203 and (computational near2 graph$1).clm.	(US-PGPUB; USPAT)	OR	OFF	OFF	2019/06/21 11:40 PM
N205	1	N204 and (real$time).clm.	(US-PGPUB; USPAT)	OR	OFF	OFF	2019/06/21 11:40 PM
N206	73	N203 and (network near2 traffic).clm.	(US-PGPUB; USPAT)	OR	OFF	OFF	2019/06/21 11:40 PM
N207	12	N206 and pattern.clm.	(US-PGPUB; USPAT)	OR	OFF	OFF	2019/06/21 11:40 PM
N208	17	N206 and pattern$1.clm.	(US-PGPUB; USPAT)	OR	OFF	OFF	2019/06/21 11:40 PM
N499	6443	(time near2 series near2 data).clm.	(US-PGPUB; USPAT)	OR	OFF	OFF	2020/03/31 02:28 PM
N500	19	N499 and (computational near2 graph$1).clm.	(US-PGPUB; USPAT)	OR	OFF	OFF	2020/03/31 02:28 PM
N501	1	N500 and (real$time).clm.	(US-PGPUB; USPAT)	OR	OFF	OFF	2020/03/31 02:28 PM
N502	83	N499 and (network near2 traffic).clm.	(US-PGPUB; USPAT)	OR	OFF	OFF	2020/03/31 02:28 PM
N503	12	N502 and pattern.clm.	(US-PGPUB; USPAT)	OR	OFF	OFF	2020/03/31 02:28 PM
N504	18	N502 and pattern$1.clm.	(US-PGPUB; USPAT)	OR	OFF	OFF	2020/03/31 02:28 PM
N505	6443	(time near2 series near2 data).clm.	(US-PGPUB; USPAT)	OR	OFF	OFF	2020/03/31 02:29 PM
N506	19	N505 and (computational near2 graph$1).clm.	(US-PGPUB; USPAT)	OR	OFF	OFF	2020/03/31 02:29 PM
N507	1	N506 and (real$time).clm.	(US-PGPUB; USPAT)	OR	OFF	OFF	2020/03/31 02:29 PM
N508	83	N505 and (network near2 traffic).clm.	(US-PGPUB; USPAT)	OR	OFF	OFF	2020/03/31 02:29 PM
N509	12	N508 and pattern.clm.	(US-PGPUB; USPAT)	OR	OFF	OFF	2020/03/31 02:29 PM
N510	18	N508 and pattern$1.clm.	(US-PGPUB; USPAT)	OR	OFF	OFF	2020/03/31 02:29 PM
N511	6443	(time near2 series near2 data).clm.	(US-PGPUB; USPAT)	OR	OFF	OFF	2020/03/31 02:31 PM
N512	19	N511 and (computational near2 graph$1).clm.	(US-PGPUB; USPAT)	OR	OFF	OFF	2020/03/31 02:31 PM
N513	1	N512 and (real$time).clm.	(US-PGPUB; USPAT)	OR	OFF	OFF	2020/03/31 02:31 PM
N514	83	N511 and (network near2 traffic).clm.	(US-PGPUB; USPAT)	OR	OFF	OFF	2020/03/31 02:31 PM

N515	12	N514 and pattern.clm.	(US-PGPUB; USPAT)	OR	OFF	OFF	2020/03/31 02:31 PM
N516	18	N514 and pattern$1.clm.	(US-PGPUB; USPAT)	OR	OFF	OFF	2020/03/31 02:31 PM
N517	6443	(time near2 series near2 data).clm.	(US-PGPUB; USPAT)	OR	OFF	OFF	2020/03/31 02:31 PM
N518	19	N517 and (computational near2 graph$1).clm.	(US-PGPUB; USPAT)	OR	OFF	OFF	2020/03/31 02:31 PM
N519	1	N518 and (real$time).clm.	(US-PGPUB; USPAT)	OR	OFF	OFF	2020/03/31 02:31 PM
N520	83	N517 and (network near2 traffic).clm.	(US-PGPUB; USPAT)	OR	OFF	OFF	2020/03/31 02:31 PM
N521	12	N520 and pattern.clm.	(US-PGPUB; USPAT)	OR	OFF	OFF	2020/03/31 02:31 PM
N522	18	N520 and pattern$1.clm.	(US-PGPUB; USPAT)	OR	OFF	OFF	2020/03/31 02:31 PM
N523	6443	(time near2 series near2 data).clm.	(US-PGPUB; USPAT)	OR	OFF	OFF	2020/03/31 02:40 PM
N524	19	N499 and (computational near2 graph$1).clm.	(US-PGPUB; USPAT)	OR	OFF	OFF	2020/03/31 02:40 PM
N525	1	N500 and (real$time).clm.	(US-PGPUB; USPAT)	OR	OFF	OFF	2020/03/31 02:40 PM
N526	83	N499 and (network near2 traffic).clm.	(US-PGPUB; USPAT)	OR	OFF	OFF	2020/03/31 02:40 PM
N527	12	N502 and pattern.clm.	(US-PGPUB; USPAT)	OR	OFF	OFF	2020/03/31 02:40 PM
N528	18	N502 and pattern$1.clm.	(US-PGPUB; USPAT)	OR	OFF	OFF	2020/03/31 02:40 PM
N529	6443	(time near2 series near2 data).clm.	(US-PGPUB; USPAT)	OR	OFF	OFF	2020/03/31 02:40 PM
N530	19	N505 and (computational near2 graph$1).clm.	(US-PGPUB; USPAT)	OR	OFF	OFF	2020/03/31 02:40 PM
N531	1	N506 and (real$time).clm.	(US-PGPUB; USPAT)	OR	OFF	OFF	2020/03/31 02:40 PM
N532	83	N505 and (network near2 traffic).clm.	(US-PGPUB; USPAT)	OR	OFF	OFF	2020/03/31 02:40 PM
N533	12	N508 and pattern.clm.	(US-PGPUB; USPAT)	OR	OFF	OFF	2020/03/31 02:40 PM
N534	18	N508 and pattern$1.clm.	(US-PGPUB; USPAT)	OR	OFF	OFF	2020/03/31 02:40 PM

Doc code: IDS
Doc description: Information Disclosure Statement (IDS) Filed

PTO/SB/08a (01-22)
Approved for use through 05/31/2024. OMB 0651-0031
U.S. Patent and Trademark Office; U.S. DEPARTMENT OF COMMERCE
Under the Paperwork Reduction Act of 1995, no persons are required to respond to a collection of information unless it contains a valid OMB control number.

INFORMATION DISCLOSURE STATEMENT BY APPLICANT (Not for submission under 37 CFR 1.99)		
	Application Number	
	Filing Date	2024-09-13
	First Named Inventor	Jason Crabtree
	Art Unit	
	Examiner Name	
	Attorney Docket Number	15387FT

U.S.PATENTS Remove

Examiner Initial*	Cite No	Patent Number	Kind Code[1]	Issue Date	Name of Patentee or Applicant of cited Document	Pages,Columns,Lines where Relevant Passages or Relevant Figures Appear
	1	6477572	B1	2002-11-05	Elderton et al.	Entire Document
	2	6857073	B2	2005-02-15	French et al.	Entire Document
	3	7139747	B1	2006-11-21	Najork	Entire Document
	4	7227948	B2	2007-06-05	Ohkuma et al.	Entire Document
	5	7310632	B2	2007-12-18	Meek et al.	Entire Document
	6	7322044	B2	2008-01-22	Hrastar	Entire Document
	7	7530105	B2	2009-05-05	Gilbert et al.	Entire Document
	8	7546333	B2	2009-06-09	Alon et al.	Entire Document

ALL REFERENCES CONSIDERED EXCEPT WHERE LINED THROUGH. /S.E.U/

INFORMATION DISCLOSURE STATEMENT BY APPLICANT (Not for submission under 37 CFR 1.99)		
	Application Number	
	Filing Date	2024-09-13
	First Named Inventor	Jason Crabtree
	Art Unit	
	Examiner Name	
	Attorney Docket Number	15387FT

	9	7685296	B2	2010-03-23	Brill et al.	Entire Document
	10	7818224	B2	2010-10-19	Boerner	Entire Document
	11	7818417	B2	2010-10-19	Ginis et al.	Entire Document
	12	7925561	B2	2011-04-12	Xu	Entire Document
	13	8069190	B2	2011-11-29	McColl et al.	Entire Document
	14	8346753	B2	2013-01-01	Hayes	Entire Document
	15	8457996	B2	2013-06-04	Winkler et al.	Entire Document
	16	8751867	B2	2014-06-10	Marvasti et al.	Entire Document
	17	8832840	B2	2014-09-09	Zhu et al.	Entire Document
	18	8949960	B2	2015-02-03	Berkman et al.	Entire Document
	19	9069976	B2	2015-06-30	Toole et al.	Entire Document

ALL REFERENCES CONSIDERED EXCEPT WHERE LINED THROUGH. /S.E.U/

INFORMATION DISCLOSURE STATEMENT BY APPLICANT (Not for submission under 37 CFR 1.99)		
	Application Number	
	Filing Date	2024-09-13
	First Named Inventor	Jason Crabtree
	Art Unit	
	Examiner Name	
	Attorney Docket Number	15387FT

	20	9110706	B2	2015-08-18	Yu et al.	Entire Document
	21	9152727	B1	2015-10-06	Balducci et al.	Entire Document
	22	9256735	B2	2016-02-09	Stute	Entire Document
	23	9400962	B2	2016-07-26	Prasad	Entire Document
	24	9466041	B2	2016-10-11	Simitsis et al.	Entire Document
	25	9558220	B2	2017-01-31	Nixon et al.	Entire Document
	26	9560065	B2	2017-01-31	Neil et al.	Entire Document
	27	9652538	B2	2017-05-16	Shivaswamy et al.	Entire Document
	28	9774522	B2	2017-09-26	Vasseur et al.	Entire Document
	29	10044726	B2	2018-08-07	Dulkin et al.	Entire Document
	30	10191768	B2	2019-01-29	Bishop et al.	Entire Document

ALL REFERENCES CONSIDERED EXCEPT WHERE LINED THROUGH. /S.E.U/

INFORMATION DISCLOSURE STATEMENT BY APPLICANT (Not for submission under 37 CFR 1.99)		
	Application Number	
	Filing Date	2024-09-13
	First Named Inventor	Jason Crabtree
	Art Unit	
	Examiner Name	
	Attorney Docket Number	15387FT

	31	10210246	B2	2019-02-19	Stojanovic et al.	Entire Document
	32	10216485	B2	2019-02-26	Misra et al.	Entire Document
	33	10270748	B2	2019-04-23	Briceno et al.	Entire Document
	34	10333992	B2	2019-06-25	Kinder et al.	Entire Document
	35	10643144	B2	2020-05-05	Bowers et al.	Entire Document
	36	10846391	B1	2020-11-24	Bonney et al.	Entire Document

If you wish to add additional U.S. Patent citation information please click the Add button. Add

U.S.PATENT APPLICATION PUBLICATIONS Remove

Examiner Initial*	Cite No	Publication Number	Kind Code[1]	Publication Date	Name of Patentee or Applicant of cited Document	Pages,Columns,Lines where Relevant Passages or Relevant Figures Appear
	1	20050165822	A1	2005-07-28	Yeung, Simon D. et al.	Entire Document
	2	20110307467	A1	2011-12-15	Severance	Entire Document
	3	20140324521	A1	2014-10-30	Mun	Entire Document

ALL REFERENCES CONSIDERED EXCEPT WHERE LINED THROUGH. /S.E.U/

INFORMATION DISCLOSURE STATEMENT BY APPLICANT (Not for submission under 37 CFR 1.99)	Application Number	
	Filing Date	2024-09-13
	First Named Inventor	Jason Crabtree
	Art Unit	
	Examiner Name	
	Attorney Docket Number	15387FT

	4	20150319156	A1	2015-11-05	GUCCIONE et al.	Entire Document
	5	20160006629	A1	2016-01-07	Ianakiev et al.	Entire Document
	6	20160012235	A1	2016-01-14	Lee et al.	Entire Document
	7	20170090893	A1	2017-03-30	Aditya et al.	Entire Document
	8	20180082304	A1	2018-03-22	Summerlin et al.	Entire Document

If you wish to add additional U.S. Published Application citation information please click the Add button. Add

FOREIGN PATENT DOCUMENTS Remove

Examiner Initial*	Cite No	Foreign Document Number[3]	Country Code[2] ¡	Kind Code[4]	Publication Date	Name of Patentee or Applicant of cited Document	Pages,Columns,Lines where Relevant Passages or Relevant Figures Appear	T[5]
	1							☐

If you wish to add additional Foreign Patent Document citation information please click the Add button Add

NON-PATENT LITERATURE DOCUMENTS Remove

Examiner Initials*	Cite No	Include name of the author (in CAPITAL LETTERS), title of the article (when appropriate), title of the item (book, magazine, journal, serial, symposium, catalog, etc), date, pages(s), volume-issue number(s), publisher, city and/or country where published.	T[5]
	1	HUANG, ALEX, A Comparison of Value at Risk Approaches and a New Method with Extreme Value Theory and Kernel Estimator	☐

ALL REFERENCES CONSIDERED EXCEPT WHERE LINED THROUGH. /S.E.U/

INFORMATION DISCLOSURE STATEMENT BY APPLICANT (Not for submission under 37 CFR 1.99)		
	Application Number	
	Filing Date	2024-09-13
	First Named Inventor	Jason Crabtree
	Art Unit	
	Examiner Name	
	Attorney Docket Number	15387FT

	2	MAROZZO, Fabrizio; TALIA, Domenico; TRUNFIO, Paolo; P2P-MapReduce - Parallel Data Processing in Dynamic Cloud Environments, Journal of Computer and System Sciences, 78 (2012) 1382–1402	☐
	3	SIMONIAN, Joseph, DAVIS, Josh., Robust Value-At-Risk: An Information Theoretic Approach, Applied Economic Letters, 2010, 17, 1551-1553.	☐

If you wish to add additional non-patent literature document citation information please click the Add button Add

EXAMINER SIGNATURE

Examiner Signature	/SHARIF E ULLAH/	Date Considered	11/02/2024

*EXAMINER: Initial if reference considered, whether or not citation is in conformance with MPEP 609. Draw line through a citation if not in conformance and not considered. Include copy of this form with next communication to applicant.

[1] See Kind Codes of USPTO Patent Documents at www.USPTO.GOV or MPEP 901.04. [2] Enter office that issued the document, by the two-letter code (WIPO Standard ST.3). [3] For Japanese patent documents, the indication of the year of the reign of the Emperor must precede the serial number of the patent document. [4] Kind of document by the appropriate symbols as indicated on the document under WIPO Standard ST.16 if possible. [5] Applicant is to place a check mark here if English language translation is attached.

ALL REFERENCES CONSIDERED EXCEPT WHERE LINED THROUGH. /S.E.U/

Patent Assignment Abstract of Title

Total Assignments: 4

Application #: 18685510 **Filing Dt:** 09/13/2024 **Patent #:** NONE **Issue Dt:**
PCT #: NONE **Intl Reg #:** **Publication #:** NONE **Pub Dt:**
Inventors: Jason Crabtree, Andrew Sellers, Ian MacLeod
Title: CONTEXTUAL AND RISK-BASED MULTI-FACTOR AUTHENTICATION

Assignment: 1

Reel/Frame: 068590 / 0988 **Received:** 09/15/2024 **Recorded:** 09/15/2024 **Mailed:** 09/17/2024 **Pages:** 6
Conveyance: ASSIGNMENT OF ASSIGNORS INTEREST (SEE DOCUMENT FOR DETAILS).
Assignors: CRABTREE, JASON **Exec Dt:** 10/25/2017
SELLERS, ANDREW **Exec Dt:** 10/25/2017
MACLEOD, IAN **Exec Dt:** 10/26/2017
Assignee: FRACTAL INDUSTRIES, INC.
11091 SUNSET HILL ROAD
SUITE 210
RESTON, VIRGINIA 20190
Correspondent: BRIAN GALVIN
2916 NW BUCKLIN HILL RD
SUITE 485
SILVERDALE, WA 98383

Assignment: 2

Reel/Frame: 068989 / 0708 **Received:** 09/18/2024 **Recorded:** 09/18/2024 **Mailed:** 10/25/2024 **Pages:** 7
Conveyance: CHANGE OF NAME (SEE DOCUMENT FOR DETAILS).
Assignor: FRACTAL INDUSTRIES, INC. **Exec Dt:** 07/22/2019
Assignee: QOMPLX, INC.
1775 TYSONS BLVD.
SUITE 800
TYSONS, VIRGINIA 22102
Correspondent: BRIAN GALVIN
2916 NW BUCKLIN HILL RD
SUITE 485
SILVERDALE, WA 98383

Assignment: 3

Reel/Frame: 069053 / 0339 **Received:** 09/26/2024 **Recorded:** 09/26/2024 **Mailed:** 10/30/2024 **Pages:** 28
Conveyance: ASSIGNMENT OF ASSIGNORS INTEREST (SEE DOCUMENT FOR DETAILS).
Assignor: QOMPLX, INC. **Exec Dt:** 08/10/2023
Assignee: QPX LLC
111 8TH AVE
NEW YORK, NEW YORK 10011
Correspondent: BRIAN GALVIN
2916 NW BUCKLIN HILL RD
SUITE 485
SILVERDALE, WA 98383

Assignment: 4

Reel/Frame: 069070 / 0283 **Received:** 09/28/2024 **Recorded:** 09/28/2024 **Mailed:** 10/31/2024 **Pages:** 7
Conveyance: CHANGE OF NAME (SEE DOCUMENT FOR DETAILS).
Assignor: QPX LLC **Exec Dt:** 08/24/2023
Assignee: QOMPLX LLC
1900 RESTON METRO PLAZA
SUITE 600
RESTON, VIRGINIA 20190
Correspondent: BRIAN GALVINI
2916 NW BUCKLIN HILL RD
SUITE 485
SILVERDALE, WA 98383

Search Results as of: 11/07/2024 09:03 AM

UNITED STATES PATENT AND TRADEMARK OFFICE

UNITED STATES DEPARTMENT OF COMMERCE
United States Patent and Trademark Office
Address: COMMISSIONER FOR PATENTS
P.O. Box 1450
Alexandria, Virginia 22313-1450
www.uspto.gov

APPLICATION NO.	FILING DATE	FIRST NAMED INVENTOR	ATTORNEY DOCKET NO.	CONFIRMATION NO.
18/885,510	09/13/2024	Jason Crabtree	15387FT	5139

82318 7590 11/07/2024
Brian Galvin
Galvin Patent Law LLC
2916 NW Bucklin Hill Road
Suite 485
Silverdale, WA 98383

EXAMINER
ULLAH, SHARIF E

ART UNIT	PAPER NUMBER
2495	

NOTIFICATION DATE	DELIVERY MODE
11/07/2024	ELECTRONIC

Please find below and/or attached an Office communication concerning this application or proceeding.

The time period for reply, if any, is set in the attached communication.

Notice of the Office communication was sent electronically on above-indicated "Notification Date" to the following e-mail address(es):

USPTO@GALVINPATENTLAW.COM
eofficeaction@appcoll.com

PTOL-90A (Rev. 04/07)

Office Action Summary	Application No. 18/885,510	Applicant(s) Crabtree et al.	
	Examiner SHARIF E ULLAH	Art Unit 2495	AIA (FITF) Status Yes

-- The MAILING DATE of this communication appears on the cover sheet with the correspondence address --

Period for Reply

A SHORTENED STATUTORY PERIOD FOR REPLY IS SET TO EXPIRE 3 MONTHS FROM THE MAILING DATE OF THIS COMMUNICATION.

- Extensions of time may be available under the provisions of 37 CFR 1.136(a). In no event, however, may a reply be timely filed after SIX (6) MONTHS from the mailing date of this communication.
- If NO period for reply is specified above, the maximum statutory period will apply and will expire SIX (6) MONTHS from the mailing date of this communication.
- Failure to reply within the set or extended period for reply will, by statute, cause the application to become ABANDONED (35 U.S.C. § 133). Any reply received by the Office later than three months after the mailing date of this communication, even if timely filed, may reduce any earned patent term adjustment. See 37 CFR 1.704(b).

Status

1)☑ Responsive to communication(s) filed on 09/13/24.

☐ A declaration(s)/affidavit(s) under **37 CFR 1.130(b)** was/were filed on _____.

2a)☐ This action is **FINAL.** 2b) ☑ This action is non-final.

3)☐ An election was made by the applicant in response to a restriction requirement set forth during the interview on _____; the restriction requirement and election have been incorporated into this action.

4)☐ Since this application is in condition for allowance except for formal matters, prosecution as to the merits is closed in accordance with the practice under *Ex parte Quayle*, 1935 C.D. 11, 453 O.G. 213.

Disposition of Claims*

5) ☑ Claim(s) 1-30 is/are pending in the application.

5a) Of the above claim(s) _____ is/are withdrawn from consideration.

6) ☐ Claim(s) _____ is/are allowed.

7) ☑ Claim(s) 1-30 is/are rejected.

8) ☐ Claim(s) _____ is/are objected to.

9) ☐ Claim(s) _____ are subject to restriction and/or election requirement

* If any claims have been determined allowable, you may be eligible to benefit from the **Patent Prosecution Highway** program at a participating intellectual property office for the corresponding application. For more information, please see http://www.uspto.gov/patents/init_events/pph/index.jsp or send an inquiry to **PPHfeedback@uspto.gov.**

Application Papers

10)☐ The specification is objected to by the Examiner.

11)☑ The drawing(s) filed on 09/13/24 is/are: a)☑ accepted or b)☐ objected to by the Examiner.

Applicant may not request that any objection to the drawing(s) be held in abeyance. See 37 CFR 1.85(a).

Replacement drawing sheet(s) including the correction is required if the drawing(s) is objected to. See 37 CFR 1.121(d).

Priority under 35 U.S.C. § 119

12)☐ Acknowledgment is made of a claim for foreign priority under 35 U.S.C. § 119(a)-(d) or (f).

Certified copies:

a)☐ All b)☐ Some** c)☐ None of the:

1.☐ Certified copies of the priority documents have been received.

2.☐ Certified copies of the priority documents have been received in Application No. _____.

3.☐ Copies of the certified copies of the priority documents have been received in this National Stage application from the International Bureau (PCT Rule 17.2(a)).

** See the attached detailed Office action for a list of the certified copies not received.

Attachment(s)

1) ☑ Notice of References Cited (PTO-892)

2) ☑ Information Disclosure Statement(s) (PTO/SB/08a and/or PTO/SB/08b) Paper No(s)/Mail Date 09/13/2024.

3) ☐ Interview Summary (PTO-413) Paper No(s)/Mail Date _____.

4) ☐ Other: _____.

DETAILED ACTION

Notice of Pre-AIA or AIA Status

The present application, filed on or after March 16, 2013, is being examined under the first inventor to file provisions of the AIA.

Information Disclosure Statement

The information disclosure statement (IDS) submitted on 09/13/2024 is in compliance with the provisions of 37 CFR 1.97. Accordingly, the information disclosure statement is being considered by the examiner.

Claim Rejections - 35 USC § 112

The following is a quotation of 35 U.S.C. 112(b):
(b) CONCLUSION.—The specification shall conclude with one or more claims particularly pointing out and distinctly claiming the subject matter which the inventor or a joint inventor regards as the invention.

The following is a quotation of 35 U.S.C. 112 (pre-AIA), second paragraph:
The specification shall conclude with one or more claims particularly pointing out and distinctly claiming the subject matter which the applicant regards as his invention.

Claims 26-30 are rejected under 35 U.S.C. 112(b) or 35 U.S.C. 112 (pre-AIA), second paragraph, as being indefinite for failing to particularly point out and distinctly claim the subject matter which the inventor or a joint inventor (or for applications subject to pre-AIA 35 U.S.C. 112, the applicant), regards as the invention. Claim 26 is a method claim that includes an “if” element. It is unclear if the “if” element is optional or required in this method.

Dependent claims 25-30 do not cure this deficiency and there are also rejected under 35 USC 112 (b).

Double Patenting

The nonstatutory double patenting rejection is based on a judicially created doctrine grounded in public policy (a policy reflected in the statute) so as to prevent the unjustified or improper timewise extension of the "right to exclude" granted by a patent and to prevent possible harassment by multiple assignees. A nonstatutory double patenting rejection is appropriate where the conflicting claims are not identical, but at least one examined application claim is not patentably distinct from the reference claim(s) because the examined application claim is either anticipated by, or would have been obvious over, the reference claim(s). See, e.g., *In re Berg*, 140 F.3d 1428, 46 USPQ2d 1226 (Fed. Cir. 1998); *In re Goodman*, 11 F.3d 1046, 29 USPQ2d 2010 (Fed. Cir. 1993); *In re Longi*, 759 F.2d 887, 225 USPQ 645 (Fed. Cir. 1985); *In re Van Ornum*, 686 F.2d 937, 214 USPQ 761 (CCPA 1982); *In re Vogel*, 422 F.2d 438, 164 USPQ 619 (CCPA 1970); *In re Thorington*, 418 F.2d 528, 163 USPQ 644 (CCPA 1969).

A timely filed terminal disclaimer in compliance with 37 CFR 1.321(c) or 1.321(d) may be used to overcome an actual or provisional rejection based on nonstatutory double patenting provided the reference application or patent either is shown to be commonly owned with the examined application, or claims an invention made as a result of activities undertaken within the scope of a joint research agreement. See MPEP § 717.02 for applications subject to examination under the first inventor to file provisions of the AIA as explained in MPEP § 2159. See MPEP §§ 706.02(l)(1) - 706.02(l)(3) for applications not subject to examination under the first inventor to file provisions of the AIA. A terminal disclaimer must be signed in compliance with 37 CFR 1.321(b).

The USPTO Internet website contains terminal disclaimer forms which may be used. Please visit www.uspto.gov/patent/patents-forms. The filing date of the application in which the form is filed

determines what form (e.g., PTO/SB/25, PTO/SB/26, PTO/AIA/25, or PTO/AIA/26) should be used. A web-based eTerminal Disclaimer may be filled out completely online using web-screens. An eTerminal Disclaimer that meets all requirements is auto-processed and approved immediately upon submission. For more information about eTerminal Disclaimers, refer to ww.uspto.gov/patents/process/file/efs/guidance/eTD-info-I.jsp.

Claims 1-30 are provisionally rejected on the ground of nonstatutory double patenting as being unpatentable over claims 1-30 of copending Application No. 18/885474. Although the claims at issue are not identical, they are not patentably distinct from each other because claims 1-30 of application 18/885474 contains every element of claims 1-30 of the instant application and thus anticipate the claims of the instant application.

This is a provisional nonstatutory double patenting rejection because the patentably indistinct claims have not in fact been patented.

Allowable Subject Matter

Claims 1-30 would be allowable if the applicant overcame the rejection(s) under Double Patenting and 35 USC 112.

Conclusion

Applicant's amendment necessitated the new ground(s) of rejection presented in this Office action. Accordingly, **THIS ACTION IS MADE FINAL**. See MPEP § 706.07(a). Applicant is reminded of the extension of time policy as set forth in 37 CFR 1.136(a).

A shortened statutory period for reply to this final action is set to expire THREE MONTHS from the mailing date of this action. In the event a first reply is filed within TWO MONTHS of the mailing date of this final action and the advisory action is not mailed until after the end of the THREE-MONTH

shortened statutory period, then the shortened statutory period will expire on the date the advisory action is mailed, and any extension fee pursuant to 37 CFR 1.136(a) will be calculated from the mailing date of the advisory action. In no event, however, will the statutory period for reply expire later than SIX MONTHS from the date of this final action.

Any inquiry concerning this communication or earlier communications from the examiner should be directed to SHARIF E ULLAH whose telephone number is (571)272-5453. The examiner can normally be reached on Mon-Fri 7:00-5:30.

Examiner interviews are available via telephone, in-person, and video conferencing using a USPTO supplied web-based collaboration tool. To schedule an interview, applicant is encouraged to use the USPTO Automated Interview Request (AIR) at http://www.uspto.gov/interviewpractice.

If attempts to reach the examiner by telephone are unsuccessful, the examiner's supervisor, Farid Homayounmehr can be reached on 571-272-3739. The fax phone number for the organization where this application or proceeding is assigned is 571-273-8300.

Information regarding the status of an application may be obtained from the Patent Application Information Retrieval (PAIR) system. Status information for published applications may be obtained from either Private PAIR or Public PAIR. Status information for unpublished applications is available through Private PAIR only. For more information about the PAIR system, see http://pair-direct.uspto.gov. Should you have questions on access to the Private PAIR system, contact the Electronic Business Center (EBC) at 866-217-9197 (toll-free). If you would like assistance from a USPTO Customer Service Representative or access to the automated information system, call 800-786-9199 (IN USA OR CANADA) or 571-272-1000.

/SHARIF E ULLAH/
Primary Examiner, Art Unit 2495

UNITED STATES
PATENT AND TRADEMARK OFFICE

P.O. Box 1450
Alexandria, VA 22313 - 1450
www.uspto.gov

TERMINAL DISCLAIMER TO OBVIATE A DOUBLE PATENTING REJECTION OVER A PRIOR PATENT

APPLICATION #	FILING DATE	FIRST NAMED INVENTOR	ATTORNEY DOCKET #
18885510	**09/13/2024**	**Jason Crabtree**	**15387FT**

Title of Invention

CONTEXTUAL AND RISK-BASED MULTI-FACTOR AUTHENTICATION

✓ Filing of terminal disclaimer does not obviate requirement for response under 37 CFR 1.111 to outstanding Office Action

✓ This electronic Terminal Disclaimer is not being used for a Joint Research Agreement.

Owner	Percent interest
QOMPLX LLC	100%
Total	**100%**

The owner(s) of percent interest listed above in the instant application hereby disclaims, except as provided below, the terminal part of the statutory term of any patent granted on the instant application which would extend beyond the expiration date of the full statutory term of any patent granted on pending reference Application Number(s)

Application #	Filing Date
18885474	09/13/2024

as the term of any patent granted on said reference application may be shortened by any terminal disclaimer filed prior to the grant of any patent on the pending reference application. The owner hereby agrees that any patent so granted on the instant application shall be enforceable only for and during such period that it and any patent granted on the reference application are commonly owned. This agreement runs with any patent granted on the instant application and is binding upon the grantee, its successors or assigns.
In making the above disclaimer, the owner does not disclaim the terminal part of any patent granted on the instant application that would extend to the expiration date of the full statutory term of any patent granted on said reference application, "as the term of any patent granted on said reference application may be shortened by any terminal disclaimer filed prior to the grant of any patent on the pending reference application," in the event that any such patent granted on the pending reference application: expires for failure to pay a maintenance fee, is held unenforceable, is found invalid by a court of competent jurisdiction, is statutorily disclaimed in whole or terminally disclaimed under 37 CFR 1.321, has all claims canceled by a reexamination certificate, is reissued, or is in any manner terminated prior to the expiration of its full statutory term as shortened by any terminal disclaimer filed prior to its grant.

The owner(s) of percent interest listed above in the instant application hereby disclaims, except as provided below, the terminal part of the statutory term of any patent granted on the instant application which would extend beyond the expiration date of the full statutory term of prior patent number(s)

Patent #

as the term of said prior patent is presently shortened by any terminal disclaimer. The owner hereby agrees that any patent so granted on the instant application shall be enforceable only for and during such period that it and the prior patent are commonly owned. This agreement runs with any patent granted on the instant application and is binding upon the grantee, its successors or assigns.
In making the above disclaimer, the owner does not disclaim the terminal part of the term of any patent granted on the instant application that would extend to the expiration date of the full statutory term of the prior patent, "as the term of said prior patent is presently shortened by any terminal disclaimer," in the event that said prior patent later:
- expires for failure to pay a maintenance fee;
- is held unenforceable;
- is found invalid by a court of competent jurisdiction;
- is statutorily disclaimed in whole or terminally disclaimed under 37 CFR 1.321;
- has all claims canceled by a reexamination certificate;
- is reissued; or
- is in any manner terminated prior to the expiration of its full statutory term as presently shortened by any terminal disclaimer.

Terminal disclaimer fee under 37 CFR 1.20(d) included with Electronic Terminal Disclaimer request.

Applicant claims the following entity status:
Regular Undiscounted

I hereby declare that all statements made herein of my own knowledge are true and that all statemnts made on information and belief are believed to be true; and further that these statements were made with the knowledge that willful false statements and the like so made are punishable by fine or imprisonment, or both, under Section 1001 of Title 18 of the United States Code and that such willful false statements may jeopardize the validity of the application or any patent issued thereon.

I certify, in accordance with 37 CFR 1.4(d)(4) that I am: An attorney or agent registered to practice before the Patent and Trademark Office who is of record in this application

Signature	Name	Registration #
/BRIAN R. GALVIN/	Brian Galvin	50966

* Statement under 37 CFR 3.73(b) is required if terminal disclaimer is signed by the assignee (owner). Form PTO/SB/96 may be used for making this certification. See MPEP 324.

UNITED STATES
PATENT AND TRADEMARK OFFICE

P.O. Box 1450
Alexandria, VA 22313 - 1450
www.uspto.gov

ELECTRONIC ACKNOWLEDGEMENT RECEIPT

APPLICATION #	RECEIPT DATE / TIME	ATTORNEY DOCKET #
18/885,510	**11/19/2024 08:24:23 PM Z ET**	**15387FT**

Title of Invention

CONTEXTUAL AND RISK-BASED MULTI-FACTOR AUTHENTICATION

Application Information

APPLICATION TYPE	Utility - Nonprovisional Application under 35 USC 111(a)	PATENT #	-
CONFIRMATION #	5139	FILED BY	Aura Morrey
PATENT CENTER #	68028479	FILING DATE	09/13/2024
CUSTOMER #	82318	FIRST NAMED INVENTOR	Jason Crabtree
CORRESPONDENCE ADDRESS	-	AUTHORIZED BY	Brian Galvin

Documents

TOTAL DOCUMENTS: 2

DOCUMENT	PAGES	DESCRIPTION	SIZE (KB)
petition-request.pdf	3	Terminal Disclaimer-Filed (Electronic)	44 KB
grantLetter.pdf	1	Terminal Disclaimer-Electronic-Approved	18 KB

Digest

DOCUMENT	MESSAGE DIGEST(SHA-512)
petition-request.pdf	7639E058980815F4C8F1117768E4D83B91D8C6B2177636745CBE3FFFFD63E46CD90032EDB46CD2DBD5CBF9FBB5C0FC86E9F97CB75306DA3820EDDE36ED89203F
grantLetter.pdf	C77FA608AA52E6360B18E32D2D1CE0D018C92862FFEB8860

C505ED7CCE6B1BBC5916A82C26F6FF04700837C344362736B
C01C2C3A5FBCA773A8ACFFFE7BC26D7

This Acknowledgement Receipt evidences receipt on the noted date by the USPTO of the indicated documents, characterized by the applicant, and including page counts, where applicable. It serves as evidence of receipt similar to a Post Card, as described in MPEP 503.

New Applications Under 35 U.S.C. 111

If a new application is being filed and the application includes the necessary components for filing date (see 37 CFR 1.53(b)-(d) and MPEP 506), a Filing Receipt (37 CFR 1.54) will be issued in due course and the date shown on this Acknowledgement Receipt will establish the filing date of the application

National Stage of an International Application under 35 U.S.C. 371

If a timely submission to enter the national stage of an international application is compliant with the conditions of 35 U.S.C. 371 and other applicable requirements a Form PCT/DO/EO/903 indicating acceptance of the application as a national stage submission under 35 U.S.C. 371 will be issued in addition to the Filing Receipt, in due course.

New International Application Filed with the USPTO as a Receiving Office

If a new international application is being filed and the international application includes the necessary components for an international filing date (see PCT Article 11 and MPEP 1810), a Notification of the International Application Number and of the International Filing Date (Form PCT/RO/105) will be issued in due course, subject to prescriptions concerning national security, and the date shown on this Acknowledgement Receipt will establish the international filing date of the application.

UNITED STATES
PATENT AND TRADEMARK OFFICE

P.O. Box 1450
Alexandria, VA 22313 - 1450
www.uspto.gov

ELECTRONIC PAYMENT RECEIPT

APPLICATION #	RECEIPT DATE / TIME	ATTORNEY DOCKET #
18/885,510	**11/19/2024 08:24:23 PM Z ET**	**15387FT**

Title of Invention

CONTEXTUAL AND RISK-BASED MULTI-FACTOR AUTHENTICATION

Application Information

APPLICATION TYPE	Utility - Nonprovisional Application under 35 USC 111(a)	PATENT #	-
CONFIRMATION #	5139	FILED BY	Aura Morrey
PATENT CENTER #	68028479	AUTHORIZED BY	Brian Galvin
CUSTOMER #	82318	FILING DATE	09/13/2024
CORRESPONDENCE ADDRESS	-	FIRST NAMED INVENTOR	Jason Crabtree

Payment Information

PAYMENT METHOD	PAYMENT TRANSACTION ID	PAYMENT AUTHORIZED BY
CARD / 1009	**E2024AIK24466704**	**Brian Galvin**

FEE CODE	DESCRIPTION	ITEM PRICE($)	QUANTITY	ITEM TOTAL($)
1814	STATUTORY DISCLAIMER, INCLUDING TERMINAL DISCLAIMER	170.00	1	170.00
			TOTAL AMOUNT:	**$170.00**

This Acknowledgement Receipt evidences receipt on the noted date by the USPTO of the indicated documents, characterized by the applicant, and including page counts, where applicable. It serves as evidence of receipt similar to a Post Card, as described in MPEP 503.

New Applications Under 35 U.S.C. 111

If a new application is being filed and the application includes the necessary components for filing date (see 37 CFR 1.53(b)-(d) and MPEP 506), a Filing Receipt (37 CFR 1.54) will be issued in due course and the date shown on this Acknowledgement Receipt will establish the filing date of the application

National Stage of an International Application under 35 U.S.C. 371

If a timely submission to enter the national stage of an international application is compliant with the conditions of 35 U.S.C.

371 and other applicable requirements a Form PCT/DO/EO/903 indicating acceptance of the application as a national stage submission under 35 U.S.C. 371 will be issued in addition to the Filing Receipt, in due course.

New International Application Filed with the USPTO as a Receiving Office

If a new international application is being filed and the international application includes the necessary components for an international filing date (see PCT Article 11 and MPEP 1810), a Notification of the International Application Number and of the International Filing Date (Form PCT/RO/105) will be issued in due course, subject to prescriptions concerning national security, and the date shown on this Acknowledgement Receipt will establish the international filing date of the application.

UNITED STATES
PATENT AND TRADEMARK OFFICE

Commissioner for Patents
United States Patent and Trademark Office
P.O. Box 1450
Alexandria, VA 22313 - 1450
www.uspto.gov

APPROVAL LETTER

APPLICATION #	FILING DATE	APPLICANT/PATENT UNDER REEXAMINATION
18/885,510	**09/13/2024**	**Jason Crabtree**

Title of Invention

CONTEXTUAL AND RISK-BASED MULTI-FACTOR AUTHENTICATION

Electronic terminal disclaimer filed on 11/19/2024

☑ Approved

This patent is subject to a Terminal Disclaimer

Approved / Disapproved by: Electronic Terminal Disclaimer automatically approved

UNITED STATES
PATENT AND TRADEMARK OFFICE

P.O. Box 1450
Alexandria, VA 22313 - 1450
www.uspto.gov

ELECTRONIC ACKNOWLEDGEMENT RECEIPT

APPLICATION #	RECEIPT DATE / TIME	ATTORNEY DOCKET #
18/885,510	**11/19/2024 08:36:40 PM Z ET**	**15387FT**

Title of Invention

CONTEXTUAL AND RISK-BASED MULTI-FACTOR AUTHENTICATION

Application Information

APPLICATION TYPE	Utility - Nonprovisional Application under 35 USC 111(a)	PATENT #	-
CONFIRMATION #	5139	FILED BY	Aura Morrey
PATENT CENTER #	68031190	FILING DATE	09/13/2024
CUSTOMER #	82318	FIRST NAMED INVENTOR	Jason Crabtree
CORRESPONDENCE ADDRESS	-	AUTHORIZED BY	Brian Galvin

Documents

TOTAL DOCUMENTS: 1

DOCUMENT	PAGES	DESCRIPTION	SIZE (KB)
241119_15387FT_OAR 1_AS_FILED.pdf	11	Amendment/Request for Reconsideration-After Non-Final Rejection	90 KB

Digest

DOCUMENT	MESSAGE DIGEST(SHA-512)
241119_15387FT_OAR 1_AS_FILED.pdf	4C9A64207F1177F1C9347F6A48D0EE6A5C0B3B493458B795F 03911858CBFB21C43FF9B22FD43DEA0A3C95EF212C10F0F7 AD31B7A68994399261E39E2248DF648

This Acknowledgement Receipt evidences receipt on the noted date by the USPTO of the indicated documents, characterized by the applicant, and including page counts, where applicable. It serves as evidence of receipt similar to a Post Card, as described in MPEP 503.

New Applications Under 35 U.S.C. 111

If a new application is being filed and the application includes the necessary components for filing date (see 37 CFR 1.53(b)-(d) and MPEP 506), a Filing Receipt (37 CFR 1.54) will be issued in due course and the date shown on this Acknowledgement Receipt will establish the filing date of the application

National Stage of an International Application under 35 U.S.C. 371

If a timely submission to enter the national stage of an international application is compliant with the conditions of 35 U.S.C. 371 and other applicable requirements a Form PCT/DO/EO/903 indicating acceptance of the application as a national stage submission under 35 U.S.C. 371 will be issued in addition to the Filing Receipt, in due course.

New International Application Filed with the USPTO as a Receiving Office

If a new international application is being filed and the international application includes the necessary components for an international filing date (see PCT Article 11 and MPEP 1810), a Notification of the International Application Number and of the International Filing Date (Form PCT/RO/105) will be issued in due course, subject to prescriptions concerning national security, and the date shown on this Acknowledgement Receipt will establish the international filing date of the application.

IN THE UNITED STATES PATENT AND TRADEMARK OFFICE

Art Unit: 2495 Examiner: Sharif E. Ullah

In Re: Jason Crabtree et al.
Case: 15387FT
Serial No.: 18/885,510
Filed: September 13, 2024
Subject: CONTEXTUAL AND RISK-BASED MULTI-FACTOR AUTHENTICATION

Commissioner for Patents
PO Box 1450
Alexandria, VA 22313-1450

Dear Commissioner:

Response A

In the Claims

All of the claims standing for examination are reproduced below with appropriate status indication.

1. (Currently amended) A computer system ~~comprising a memory, wherein the computer system is~~ configured to execute software instructions stored on nontransitory machine-readable storage media, wherein the software instructions comprise instructions that:

receive a request to authenticate a client, wherein the request comprises a first identifier and a password,

store, in a multidimensional time-series database, information about the request,

determine whether the password corresponds to a first user account identified by the first identifier,

determine whether ~~the request to authenticate the client requires~~ an additional verification is required to grant access,

wherein determining whether the ~~request to authenticate the client requires~~ additional verification is required to grant access comprises:

retrieving, from the multidimensional time-series database, historical information about previous access requests associated with the first user account, and

determining, based at least on the historical information, whether the first user account is associated with a previous request to authenticate, wherein the previous request to authenticate comprised a second identifier not associated with the first user account; and,

~~if the request to authenticate the client is determined to require~~ based on the additional verification being required to grant access:[[,]]

select an additional verification method from a plurality of verification methods,

cause the client to be prompted to complete the additional verification method, and

determine whether the additional verification method has been completed correctly.

2. (Currently amended) The computer system of claim 1, wherein determining whether the ~~request to authenticate the client requires~~ additional verification is required to grant access further comprises processing endpoint data from entities connected to the network.

3. (Currently amended) The computer system of claim 1, wherein determining whether the ~~request to authenticate the client requires~~ additional verification is required to grant access further comprises processing an external threat intelligence feed.

4. (Original) The computer system of claim 1, wherein the second identifier is associated with a second user account, and wherein the second user account is different from the first user account.

5. (Currently amended) The computer system of claim 1, wherein the ~~further configured to execute~~ software instructions ~~stored on nontransitory machine-readable storage media~~ further comprise instructions that:

~~if the request to authenticate the client is determined to require~~ based on the additional verification being required to grant access:[[,]]

determine that a probable cyberattack is detected, and

provide an alert,

wherein the alert includes the first identifier and an indicator that a probable cyberattack is detected, and

wherein the alert is designated to be provided to an administrator of the network.

6. (Original) The computer system of claim 5, wherein the alert further includes an indication of where the probable cyberattack may have originated.

7. (Original) The computer system of claim 5, wherein the alert further includes an indication of what enterprise information may be at risk in the probable cyberattack.

8. (Original) The computer system of claim 5, wherein the alert further includes predictive information.

9. (Currently amended) A method implemented on a computer system connected to a network, the method comprising:

receiving a request to authenticate a client, wherein the request comprises a first identifier and a password,

storing, in a multidimensional time-series database, information about the request,

determining whether the password corresponds to a first user account identified by the first identifier,

determining whether ~~the request to authenticate the client requires~~ an additional verification is required to grant access,

wherein determining whether the ~~request to authenticate the client requires~~ additional verification is required to grant access comprises:

retrieving, from the multidimensional time-series database, historical information about previous access requests associated with the first user account,

determining, based at least on the historical information, whether the first user account is associated with a previous request to authenticate, wherein the previous request to authenticate comprised a second identifier not associated with the first user account; and,

~~if the request to authenticate the client is determined to require~~ based on the additional verification being required to grant access:[[,]]

selecting an additional verification method from a plurality of verification methods,

causing the client to be prompted to complete the additional verification method, and

determining whether the additional verification method has been completed correctly.

10. (Currently amended) The method of claim 9, wherein determining whether the ~~request to authenticate the client requires~~ additional verification is required to grant access further comprises processing endpoint data from entities connected to the network.

11. (Currently amended) The method of claim 9, wherein determining whether the ~~request to authenticate the client requires~~ additional verification is required to grant access further comprises processing an external threat intelligence feed.

12. (Original) The method of claim 9, wherein the second identifier is associated with a second user account, and wherein the second user account is different from the first user account.

13. (Currently amended) The method of claim 9, further comprising:

~~if the request to authenticate the client is determined to require~~ based on the additional verification being required to grant access:[[,]]

determining that a probable cyberattack is detected, and

delivering an alert,

wherein the alert includes the first identifier and an indicator that a probable cyberattack is detected, and

wherein the alert is designated to be delivered to an administrator of the network.

14. (Original) The method of claim 13, wherein the alert further includes an indication of where the probable cyberattack may have originated.

15. (Original) The method of claim 13, wherein the alert further includes an indication of what enterprise information may be at risk in the probable cyberattack.

16. (Original) The method of claim 13, wherein the alert further includes predictive information.

17. (Currently amended) The method of claim 12, further comprising:

~~if the request to authenticate the client is determined to require~~ based on the additional verification being required to grant access:[[,]]

determining that a probable cyberattack is detected, and

delivering an alert,

wherein the alert includes the first identifier and an indicator that a probable cyberattack is detected, and

wherein the alert is designated to be delivered to an administrator of the network.

18. (Original) The method of claim 17, wherein the alert further includes predictive information.

19. (Currently amended) A computer system ~~comprising a memory, wherein the computer system is~~ configured to execute software instructions stored on nontransitory machine-readable storage media, wherein the software instructions comprise instructions that:

receive a request to authenticate a client, wherein the request comprises a first identifier and a password,

store, in a multidimensional time-series database, information about the request,

determine whether the password corresponds to a user account identified by the first identifier,

determine whether ~~the request to authenticate the client requires~~ an additional verification is required to grant access,

wherein determining whether the ~~request to authenticate the client requires~~ additional verification is required to grant access comprises:

retrieving, from the multidimensional time-series database, historical information about previous access requests associated with the user account,

determining, based at least on the historical information, whether the user account is associated with a plurality of previous requests to authenticate, wherein the plurality of previous requests to authenticate comprises at least one second identifier not associated with any user account; and,

~~if the request to authenticate the client is determined to require~~ based on the additional verification being required to grant access:[[,]]

select an additional verification method from a plurality of verification methods,

cause the client to be prompted to complete the additional verification method, and

determine whether the additional verification method has been completed correctly.

20. (Currently amended) The computer system of claim 19, wherein determining whether the ~~request to authenticate the client requires~~ additional verification is required to grant access further comprises processing endpoint data from entities connected to the network.

21. (Currently amended) The computer system of claim 19 wherein determining whether the ~~request to authenticate the client requires~~ additional verification is required to grant access further comprises processing an external threat intelligence feed.

22. (Original) The computer system of claim 19, wherein selecting an additional verification method from a plurality of verification methods comprises processing at least a portion of the plurality of previous requests to authenticate.

23. (Currently amended) The computer system of claim 19, wherein the ~~further configured to execute~~ software instructions ~~stored on nontransitory machine-readable storage media~~ further comprise instructions that:

~~if the request to authenticate the client is determined to require~~ based on the additional verification being required to grant access:[[,]]

determine that a probable cyberattack is detected, and

provide an alert,

wherein the alert includes the first identifier and an indicator that a probable cyberattack is detected, and

wherein the alert is designated to be provided to an administrator of the network.

24. (Original) The computer system of claim 23, wherein the alert further includes an indication of where the probable cyberattack may have originated.

25. (Original) The computer system of claim 23, wherein the alert further includes an indication of what enterprise information may be at risk in the probable cyberattack.

26. (Currently amended) A method implemented on a computer system connected to a network, the method comprising:

receiving a request to authenticate a client, wherein the request comprises a first identifier and a password,

storing, in a multidimensional time-series database, information about the request,

determining whether the password corresponds to a user account identified by the first identifier,

determining whether ~~the request to authenticate the client requires~~ an additional verification is required to grant access,

wherein determining whether the ~~request to authenticate the client requires~~ additional verification is required to grant access comprises:

retrieving, from the multidimensional time-series database, historical information about previous access requests associated with the user account,

determining, based at least on the historical information, whether the user account is associated with a plurality of previous requests to authenticate, wherein the plurality of previous requests to authenticate comprises at least one second identifier not associated with any user account; and

~~if the request to authenticate the client is determined to require~~ based on the additional verification being required to grant access:[[,]]

selecting an additional verification method from a plurality of verification methods,

causing the client to be prompted to complete the additional verification method, and

determining whether the additional verification method has been completed correctly.

27. (Currently amended) The method of claim 26, wherein determining whether the ~~request to authenticate the client requires~~ additional verification is required to grant access further comprises processing endpoint data from entities connected to the network.

28. (Currently amended) The method of claim 26, wherein determining whether the ~~request to authenticate the client requires~~ additional verification is required to grant access further comprises processing an external threat intelligence feed.

29. (Original) The method of claim 26, wherein selecting an additional verification method from a plurality of verification methods comprises processing at least a portion of the plurality of previous requests to authenticate.

30. (Currently amended) The method of claim 29, further comprising:

~~if the request to authenticate the client is determined to require~~ based on the additional verification being required to grant access:[[,]]

determining that a probable cyberattack is detected, and

delivering an alert,

wherein the alert includes the first identifier and an indicator that a probable cyberattack is detected, and

wherein the alert is designated to be delivered to an administrator of the network.

REMARKS

This communication is responsive to the office action pertaining to the instant invention that was mailed on November 7, 2024.

From the Action:

Claims 26-30 are rejected under 35 U.S.C. §112(b) or 35 U.S.C. §112 (pre-AIA), second paragraph, as being indefinite for failing to particularly point out and distinctly claim the subject matter which the inventor or a joint inventor (or for applications subject to pre-AIA 35 U.S.C. §112, the applicant), regards as the invention. Claim 26 is a method claim that includes an "if" element. It is unclear if the "if" element is optional or required in this method.

Dependent claims 25-30 do not cure this deficiency and there are also rejected under 35 USC §112 (b).

Applicant's Response

Independent claims 1, 9, 19, and 26 have been amended to rephrase the limitation that recited the word, "if"; no new matter has been added. Dependent claims 2-3, 5, 10-11, 17, and 20-21, 23, 27-28, and 30 have been amended for consistency with claims 1, 9, 19, and 26.

Applicant respectfully requests that the §112 rejections be withdrawn accordingly.

From the Action:

Claims 1-30 are provisionally rejected on the ground of nonstatutory double patenting as being unpatentable over claims 1-30 of copending Application No. 18/885,474. Although the claims at issue are not identical, they are not patentably distinct from each other.

A timely filed terminal disclaimer in compliance with 37 CFR §1.321(c) or §1.321(d) may be used to overcome an actual or provisional rejection based on a nonstatutory double patenting ground provided the reference application or patent either is shown to be commonly owned with this application, or claims an invention made as a result of activities undertaken within the scope of a joint research agreement. See MPEP §717.02 for applications subject to examination under the first inventor to file provisions of the AIA as explained in MPEP §2159. See MPEP §§706.02(l)(1) - 706.02(l)(3) for applications not subject to examination under the first inventor

to file provisions of the AIA. A terminal disclaimer must be signed in compliance with 37 CFR §1.321(b).

Applicant's Response

Without conceding the propriety of the rejection, and in the interest of furthering prosecution, a terminal disclaimer is filed herewith, disclaiming all patent term beyond that of U.S. Application No. 18/885,474. The applicant therefore respectfully requests that the double patenting rejections be withdrawn accordingly.

SUMMARY

As all of the claims are believed to be, and to have been shown to be, patentable over the references cited, applicant respectfully requests that the case be passed quickly to issue. If any time extension is needed beyond any extension requested with this amendment, such extension is hereby requested.

Respectfully Submitted,

Jason Crabtree

By: */BRIAN R. GALVIN/*

Brian R. Galvin
Reg. No. 50,966

Galvin Patent Law LLC
2916 NW Bucklin Hill Road
Suite 485
Silverdale, WA 98383
(360) 674-6233
November 19, 2024

Notice of References Cited	Application/Control No. 18/885,510	Applicant(s)/Patent Under Reexamination Crabtree et al.	
	Examiner SHARIF E ULLAH	Art Unit 2495	Page 1 of 5

U.S. PATENT DOCUMENTS

*		Document Number Country Code-Number-Kind Code	Date YYYY-MM-DD	Name	CPC Classification	US Classification
*	A	US-20160006629-A1	2016-01-07	Ianakiev; George	G06F21/85	709/224
*	B	US-20140359552-A1	2014-12-04	Misra; Prateep	H04L67/12	717/100
*	C	US-20150020199-A1	2015-01-15	Neil; Joshua Charles	H04L63/1408	726/23
*	D	US-7171515-B2	2007-01-30	Ohta; Yoshiyuki	G06F12/127	711/E12.076
*	E	US-20050000165-A1	2005-01-06	Dischinat, Greg	E06B7/23	49/496.1
*	F	US-6256544-B1	2001-07-03	Weissinger; Wolfgang	G05B19/0421	700/1
*	G	US-20130117852-A1	2013-05-09	Stute; Michael Roy	H04L63/1425	726/23
*	H	US-20070226796-A1	2007-09-27	Gilbert; Logan	G06F21/577	726/25
*	I	US-20130111592-A1	2013-05-02	ZHU; Fang Julie	G06F21/577	726/25
*	J	US-20160275123-A1	2016-09-22	LIN; WUJUAN	G06F9/5083	1/1
*	K	US-10846391-B1	2020-11-24	Bonney; Jordan C.	G06V40/70	1/1
*	L	US-10643144-B2	2020-05-05	Bowers; Stuart Michael	G06N20/00	1/1
*	M	US-10333992-B2	2019-06-25	Kinder; Ross R.	H04L63/1416	1/1

FOREIGN PATENT DOCUMENTS

*		Document Number Country Code-Number-Kind Code	Date YYYY-MM-DD	Country	Name	CPC Classification
	N					
	O					
	P					
	Q					
	R					
	S					
	T					

NON-PATENT DOCUMENTS

*		Include as applicable: Author, Title Date, Publisher, Edition or Volume, Pertinent Pages)
	U	
	V	
	W	
	X	

*A copy of this reference is not being furnished with this Office action. (See MPEP § 707.05(a).)
Dates in YYYY-MM-DD format are publication dates. Classifications may be US or foreign.

Notice of References Cited	Application/Control No. 18/885,510	Applicant(s)/Patent Under Reexamination Crabtree et al.	
	Examiner SHARIF E ULLAH	Art Unit 2495	Page 2 of 5

U.S. PATENT DOCUMENTS

*		Document Number Country Code-Number-Kind Code	Date YYYY-MM-DD	Name	CPC Classification	US Classification
*	A	US-10270748-B2	2019-04-23	Briceno; Marc	H04L9/006	1/1
*	B	US-10216485-B2	2019-02-26	Misra; Prateep	H04L67/10	1/1
*	C	US-10210246-B2	2019-02-19	Stojanovic; Alexander Sasha	G06Q30/02	1/1
*	D	US-10044726-B2	2018-08-07	Dulkin; Andrey	H04L63/1441	1/1
*	E	US-10191768-B2	2019-01-29	Bishop; Elden Gregory	G06F9/4881	1/1
*	F	US-20180082304-A1	2018-03-22	Summerlin; William Christopher	G06Q20/3229	1/1
*	G	US-9774522-B2	2017-09-26	Vasseur; Jean-Philippe	H04L41/16	1/1
*	H	US-9652538-B2	2017-05-16	Shivaswamy; Gurudatta Horantur	H04N7/16	1/1
*	I	US-9560065-B2	2017-01-31	Neil; Joshua Charles	H04L63/1425	1/1
*	J	US-20170090893-A1	2017-03-30	Aditya; Abhimanyu	G06F8/51	1/1
*	K	US-9558220-B2	2017-01-31	Nixon; Mark J.	G05B19/042	1/1
*	L	US-9400962-B2	2016-07-26	Prasad; Mukul Ranjan	G06Q10/06	1/1
*	M	US-9466041-B2	2016-10-11	Simitsis; Alkiviadis	G06Q10/0633	1/1

FOREIGN PATENT DOCUMENTS

*		Document Number Country Code-Number-Kind Code	Date YYYY-MM-DD	Country	Name	CPC Classification
	N					
	O					
	P					
	Q					
	R					
	S					
	T					

NON-PATENT DOCUMENTS

*		Include as applicable: Author, Title Date, Publisher, Edition or Volume, Pertinent Pages)
	U	
	V	
	W	
	X	

*A copy of this reference is not being furnished with this Office action. (See MPEP § 707.05(a).)
Dates in YYYY-MM-DD format are publication dates. Classifications may be US or foreign.

Notice of References Cited	Application/Control No. 18/885,510	Applicant(s)/Patent Under Reexamination Crabtree et al.	
	Examiner SHARIF E ULLAH	Art Unit 2495	Page 3 of 5

U.S. PATENT DOCUMENTS

*		Document Number Country Code-Number-Kind Code	Date YYYY-MM-DD	Name	CPC Classification	US Classification
*	A	US-9256735-B2	2016-02-09	Stute; Michael Roy	H04L63/1425	1/1
*	B	US-20160012235-A1	2016-01-14	Lee; Thomas Elliott	G06F21/6218	726/25
*	C	US-20150319156-A1	2015-11-05	GUCCIONE; Louis J.	H04L63/083	726/7
*	D	US-9152727-B1	2015-10-06	Balducci; Michael	G06F16/955	1/1
*	E	US-9110706-B2	2015-08-18	Yu; Yuan	G06F8/445	1/1
*	F	US-9069976-B2	2015-06-30	Toole; Robert C.	H04L63/105	1/1
*	G	US-8949960-B2	2015-02-03	Berkman; Omer	G06F21/31	726/6
*	H	US-20140324521-A1	2014-10-30	Mun; Johnathan	G06Q30/0201	705/7.28
*	I	US-8832840-B2	2014-09-09	Zhu; Fang Julie	G06F21/577	726/25
*	J	US-8751867-B2	2014-06-10	Marvasti; Mazda A.	H04L41/147	714/26
*	K	US-8457996-B2	2013-06-04	Winkler; Ulrich	G06Q10/00	705/348
*	L	US-8346753-B2	2013-01-01	Hayes; Paul V	G06F16/951	707/711
*	M	US-8069190-B2	2011-11-29	McColl; William Finlay	G06F16/2465	707/810

FOREIGN PATENT DOCUMENTS

*		Document Number Country Code-Number-Kind Code	Date YYYY-MM-DD	Country	Name	CPC Classification
	N					
	O					
	P					
	Q					
	R					
	S					
	T					

NON-PATENT DOCUMENTS

*		Include as applicable: Author, Title Date, Publisher, Edition or Volume, Pertinent Pages)
	U	
	V	
	W	
	X	

*A copy of this reference is not being furnished with this Office action. (See MPEP § 707.05(a).)
Dates in YYYY-MM-DD format are publication dates. Classifications may be US or foreign.

Notice of References Cited	Application/Control No. 18/885,510	Applicant(s)/Patent Under Reexamination Crabtree et al.	
	Examiner SHARIF E ULLAH	Art Unit 2495	Page 4 of 5

U.S. PATENT DOCUMENTS

*		Document Number Country Code-Number-Kind Code	Date YYYY-MM-DD	Name	CPC Classification	US Classification
*	A	US-20110307467-A1	2011-12-15	Severance; Stephen	H04L67/02	707/E17.108
*	B	US-7925561-B2	2011-04-12	Xu; Chenjian	G06Q40/06	705/37
*	C	US-7818224-B2	2010-10-19	Boerner; Sean T.	G06F17/18	705/37
*	D	US-7818417-B2	2010-10-19	Ginis; Roman	H04L41/50	709/224
*	E	US-7685296-B2	2010-03-23	Brill; Eric D.	G06F16/951	709/204
*	F	US-7546333-B2	2009-06-09	Alon; Roee	H04L67/1097	709/200
*	G	US-7530105-B2	2009-05-05	Gilbert; Logan	H04L63/1425	709/227
*	H	US-7322044-B2	2008-01-22	Hrastar; Scott E.	H04L41/0893	726/22
*	I	US-7310632-B2	2007-12-18	Meek; Christopher A.	G06F16/951	707/E17.108
*	J	US-7227948-B2	2007-06-05	Ohkuma; Kenji	H04L9/0631	380/42
*	K	US-7139747-B1	2006-11-21	Najork; Marc Alexander	G06F16/951	707/999.102
*	L	US-20050165822-A1	2005-07-28	Yeung, Simon D.	G06Q10/10	707/999.102
*	M	US-6857073-B2	2005-02-15	French; Jennifer	H04L63/105	713/168

FOREIGN PATENT DOCUMENTS

*		Document Number Country Code-Number-Kind Code	Date YYYY-MM-DD	Country	Name	CPC Classification
	N					
	O					
	P					
	Q					
	R					
	S					
	T					

NON-PATENT DOCUMENTS

*		Include as applicable: Author, Title Date, Publisher, Edition or Volume, Pertinent Pages)
	U	
	V	
	W	
	X	

*A copy of this reference is not being furnished with this Office action. (See MPEP § 707.05(a).)
Dates in YYYY-MM-DD format are publication dates. Classifications may be US or foreign.

Notice of References Cited	Application/Control No. 18/885,510	Applicant(s)/Patent Under Reexamination Crabtree et al.	
	Examiner SHARIF E ULLAH	Art Unit 2495	Page 5 of 5

U.S. PATENT DOCUMENTS

*		Document Number Country Code-Number-Kind Code	Date YYYY-MM-DD	Name	CPC Classification	US Classification
*	A	US-6477572-B1	2002-11-05	Elderton; John	H04L41/0893	709/224
	B					
	C					
	D					
	E					
	F					
	G					
	H					
	I					
	J					
	K					
	L					
	M					

FOREIGN PATENT DOCUMENTS

*		Document Number Country Code-Number-Kind Code	Date YYYY-MM-DD	Country	Name	CPC Classification
	N					
	O					
	P					
	Q					
	R					
	S					
	T					

NON-PATENT DOCUMENTS

*		Include as applicable: Author, Title Date, Publisher, Edition or Volume, Pertinent Pages)
	U	
	V	
	W	
	X	

*A copy of this reference is not being furnished with this Office action. (See MPEP § 707.05(a).)
Dates in YYYY-MM-DD format are publication dates. Classifications may be US or foreign.

Search Notes	Application/Control No.	Applicant(s)/Patent Under Reexamination
	18/885,510	Crabtree et al.
	Examiner	**Art Unit**
	SHARIF E ULLAH	2495

CPC - Searched*		
Symbol	**Date**	**Examiner**

CPC Combination Sets - Searched*		
Symbol	**Date**	**Examiner**
G06Q30/0202 OR G06Q40/04 OR G06Q10/0637 OR G06Q10/067 OR G06Q30/0201 OR G06Q30/0205 OR G06Q40/06 OR G06Q40/08 OR G06N5/04 OR G06N7/005 OR G06N99/005 OR H04L63/1425 OR H04L63/1441 OR H04L63/0861	11/30/2024	SU

US Classification - Searched*			
Class	**Subclass**	**Date**	**Examiner**
726	2, 7, 21, 36	11/30/2024	SU
713	150, 163, 181	11/30/2024	SU
380	255, 264, 276	11/30/2024	SU

* See search history printout included with this form or the SEARCH NOTES box below to determine the scope of the search.

Search Notes		
Search Notes	**Date**	**Examiner**
SEARCH class limited w/text search (see search history)	11/30/2024	SU
SEARCH inventor and assignee search (see search history)	11/30/2024	SU
SEARCH text search (see search history)	11/30/2024	SU
NPL Google scholar	11/30/2024	SU

/SHARIF E ULLAH/ Primary Examiner, Art Unit 2495	

Search Notes	Application/Control No.	Applicant(s)/Patent Under Reexamination
	18/885,510	Crabtree et al.
	Examiner	**Art Unit**
	SHARIF E ULLAH	2495

Interference Search			
US Class/CPC Symbol	**US Subclass/CPC Group**	**Date**	**Examiner**
		11/30/2024	SU

/SHARIF E ULLAH/ Primary Examiner, Art Unit 2495	

Issue Classification	Application/Control No.	Applicant(s)/Patent Under Reexamination
	18/885,510	Crabtree et al.
	Examiner	**Art Unit**
	SHARIF E ULLAH	2495

CPC						
Symbol					**Type**	**Version**
H04L	/	63	/	0861	F	2013-01-01
H04L	/	63	/	105	I	2013-01-01
H04L	/	43	/	04	I	2013-01-01
H04L	/	63	/	083	I	2013-01-01
H04L	/	63	/	1433	I	2013-01-01
H04L	/	63	/	0876	I	2013-01-01
H04L	/	63	/	1408	A	2013-01-01
H04L	/	2463	/	082	A	2013-01-01

CPC Combination Sets								
Symbol					**Type**	**Set**	**Ranking**	**Version**
	/		/					

NONE (Assistant Examiner)	(Date)	**Total Claims Allowed:** 30	
/SHARIF E ULLAH/ Primary Examiner, Art Unit 2495 (Primary Examiner)	30 November 2024 (Date)	O.G. Print Claim(s) 1	O.G. Print Figure 1

U.S. Patent and Trademark Office

Part of Paper No.: 20241130

Issue Classification	Application/Control No.	Applicant(s)/Patent Under Reexamination
	18/885,510	Crabtree et al.
	Examiner	**Art Unit**
	SHARIF E ULLAH	2495

INTERNATIONAL CLASSIFICATION				
CLAIMED				
H04L	/	63	/	0861

NON-CLAIMED				
	/		/	

US ORIGINAL CLASSIFICATION	
CLASS	**SUBCLASS**
726	7

CROSS REFERENCES(S)						
CLASS	**SUBCLASS (ONE SUBCLASS PER BLOCK)**					
726	2	21	36			
713	150	163	181			
380	255	264	276			

NONE (Assistant Examiner) (Date)		**Total Claims Allowed:** 30	
/SHARIF E ULLAH/ Primary Examiner, Art Unit 2495 (Primary Examiner)	30 November 2024 (Date)	O.G. Print Claim(s) 1	O.G. Print Figure 1

Issue Classification	Application/Control No.	Applicant(s)/Patent Under Reexamination
	18/885,510	Crabtree et al.
	Examiner	**Art Unit**
	SHARIF E ULLAH	2495

☑ Claims renumbered in the same order as presented by applicant ☐ CPA ☑ T.D. ☐ R.1.47

CLAIMS

Final	Original	Final	Original	Final	Original	Final	Original	Final	Original	Final	Original	Final	Original	Final	Original
	1		10		19		28								
	2		11		20		29								
	3		12		21		30								
	4		13		22										
	5		14		23										
	6		15		24										
	7		16		25										
	8		17		26										
	9		18		27										

NONE (Assistant Examiner)	(Date)	**Total Claims Allowed:** 30	
/SHARIF E ULLAH/ Primary Examiner, Art Unit 2495 (Primary Examiner)	30 November 2024 (Date)	O.G. Print Claim(s) 1	O.G. Print Figure 1

U.S. Patent and Trademark Office Part of Paper No.: 20241130

Index of Claims	Application/Control No.	Applicant(s)/Patent Under Reexamination
	18/885,510	Crabtree et al.
	Examiner	**Art Unit**
	SHARIF E ULLAH	2495

✓	Rejected	-	Cancelled	N	Non-Elected	A	Appeal
=	Allowed	÷	Restricted	I	Interference	O	Objected

CLAIMS

☑ Claims renumbered in the same order as presented by applicant ☐ CPA ☑ T.D. ☐ R.1.47

CLAIM		DATE								
Final	Original	11/02/2024	11/30/2024							
	1	✓								
	2	✓	=							
	3	✓	=							
	4	✓	=							
	5	✓	=							
	6	✓	=							
	7	✓	=							
	8	✓	=							
	9	✓	=							
	10	✓	=							
	11	✓	=							
	12	✓	=							
	13	✓	=							
	14	✓	=							
	15	✓	=							
	16	✓	=							
	17	✓	=							
	18	✓	=							
	19	✓	=							
	20	✓	=							
	21	✓	=							
	22	✓	=							
	23	✓	=							
	24	✓	=							
	25	✓	=							
	26	✓	=							
	27	✓	=							
	28	✓	=							
	29	✓	=							
	30	✓	=							

PE2E SEARCH - Search History (Prior Art)

Ref #	Hits	Search Query	DBs	Default Operator	Plurals	British Equivalents	Time Stamp
L1	31	"15237625"	(US-PGPUB; USPAT; USOCR; FPRS; EPO; JPO; DERWENT; IBM_TDB)	OR	OFF	OFF	2018/11/26 01:31 PM
L2	11853	726/23	(US-PGPUB; USPAT; USOCR; FPRS; EPO; JPO; DERWENT; IBM_TDB)	OR	OFF	OFF	2018/11/26 01:31 PM
L3	9315	726/23.ccls.	(US-PGPUB; USPAT; USOCR; FPRS; EPO; JPO; DERWENT; IBM_TDB)	OR	OFF	OFF	2018/11/26 01:31 PM
L4	31	"15237625"	(US-PGPUB; USPAT; USOCR; FPRS; EPO; JPO; DERWENT; IBM_TDB)	OR	OFF	OFF	2018/11/26 01:31 PM
L5	71	(jason near2 crabtree).inv.	(US-PGPUB; USPAT; USOCR; FPRS; EPO; JPO; DERWENT; IBM_TDB)	OR	OFF	OFF	2018/11/26 01:32 PM
L6	0	(fractal near2 industries).as.	(US-PGPUB; USPAT; USOCR; FPRS; EPO; JPO; DERWENT; IBM_TDB)	OR	OFF	OFF	2018/11/26 01:32 PM
L7	53	"14925974"	(US-PGPUB; USPAT; USOCR; FPRS; EPO; JPO; DERWENT; IBM_TDB)	OR	OFF	OFF	2018/11/26 01:32 PM
L8	0	("14925974").PN.	(US-PGPUB; USPAT; USOCR; FPRS; EPO; JPO; DERWENT; IBM_TDB)	OR	OFF	OFF	2018/11/26 01:32 PM
L9	0	("15237625").PN.	(US-PGPUB; USPAT; USOCR; FPRS; EPO; JPO; DERWENT; IBM_TDB)	OR	OFF	OFF	2018/11/26 01:32 PM
L10	17	L1 and (time series).clm.	(US-PGPUB; USPAT; USOCR; FPRS; EPO; JPO; DERWENT; IBM_TDB)	OR	OFF	OFF	2018/11/26 01:34 PM
L11	1	((predictive near2 planning) same (real near2 time near2 triage near2 analysis))	(US-PGPUB; USPAT; USOCR; FPRS; EPO; JPO; DERWENT; IBM_TDB)	OR	OFF	OFF	2018/11/26 01:37 PM
L12	3815236	((predictive near2 planning) same (real near2 time) with triage analysis)	(US-PGPUB; USPAT; USOCR; FPRS; EPO; JPO; DERWENT; IBM_TDB)	OR	OFF	OFF	2018/11/26 01:38 PM
L13	1	((predictive near2	(US-PGPUB; USPAT;	OR	OFF	OFF	2018/11/26

		planning) same (real near2 time) with triage with analysis)	USOCR; FPRS; EPO; JPO; DERWENT; IBM_TDB)				01:38 PM
L14	21	((real near2 time) with triage with analysis)	(US-PGPUB; USPAT; USOCR; FPRS; EPO; JPO; DERWENT; IBM_TDB)	OR	OFF	OFF	2018/11/26 01:38 PM
L15	0	L14 and (predicitve near2 planning)	(US-PGPUB; USPAT; USOCR; FPRS; EPO; JPO; DERWENT; IBM_TDB)	OR	OFF	OFF	2018/11/26 01:39 PM
L16	1	L14 and (cyber near3 attack$5)	(US-PGPUB; USPAT; USOCR; FPRS; EPO; JPO; DERWENT; IBM_TDB)	OR	OFF	OFF	2018/11/26 01:39 PM
L17	1	L14 and (cybersecurity)	(US-PGPUB; USPAT; USOCR; FPRS; EPO; JPO; DERWENT; IBM_TDB)	OR	OFF	OFF	2018/11/26 01:40 PM
L18	1	L14 and (cyber$1security)	(US-PGPUB; USPAT; USOCR; FPRS; EPO; JPO; DERWENT; IBM_TDB)	OR	OFF	OFF	2018/11/26 01:40 PM
L19	0	(predicitve near2 planning)	(US-PGPUB; USPAT; USOCR; FPRS; EPO; JPO; DERWENT; IBM_TDB)	OR	OFF	OFF	2018/11/26 01:40 PM
L20	624	(predictive near2 planning)	(US-PGPUB; USPAT; USOCR; FPRS; EPO; JPO; DERWENT; IBM_TDB)	OR	OFF	OFF	2018/11/26 01:41 PM
L21	5	L20 and (cyber$1security)	(US-PGPUB; USPAT; USOCR; FPRS; EPO; JPO; DERWENT; IBM_TDB)	OR	OFF	OFF	2018/11/26 01:41 PM
L22	5	L21 AND ((G06Q30/0202 OR G06Q40/04 OR G06Q10/0637 OR G06Q10/067 OR G06Q30/0201 OR G06Q30/0205 OR G06Q40/06 OR G06Q40/08 OR G06N5/04 OR G06N7/005 OR G06N99/005 OR H04L63/1425 OR H04L63/1441).CPC.)	(US-PGPUB; USPAT; USOCR; FPRS; EPO; JPO; DERWENT; IBM_TDB)	OR	OFF	OFF	2018/11/26 01:41 PM
L23	8283	726/2.ccls.	(US-PGPUB; USPAT; USOCR; FPRS; EPO; JPO; DERWENT; IBM_TDB)	OR	OFF	OFF	2018/11/26 02:03 PM
L24	2933	726/21.ccls.	(US-PGPUB; USPAT;	OR	OFF	OFF	2018/11/26

			USOCR; FPRS; EPO; JPO; DERWENT; IBM_TDB)				02:03 PM
L25	361	726/36.ccls.	(US-PGPUB; USPAT; USOCR; FPRS; EPO; JPO; DERWENT; IBM_TDB)	OR	OFF	OFF	2018/11/26 02:03 PM
L26	5002	713/150.ccls.	(US-PGPUB; USPAT; USOCR; FPRS; EPO; JPO; DERWENT; IBM_TDB)	OR	OFF	OFF	2018/11/26 02:03 PM
L27	926	713/163.ccls.	(US-PGPUB; USPAT; USOCR; FPRS; EPO; JPO; DERWENT; IBM_TDB)	OR	OFF	OFF	2018/11/26 02:03 PM
L28	1754	713/181.ccls.	(US-PGPUB; USPAT; USOCR; FPRS; EPO; JPO; DERWENT; IBM_TDB)	OR	OFF	OFF	2018/11/26 02:03 PM
L29	3070	380/255.ccls.	(US-PGPUB; USPAT; USOCR; FPRS; EPO; JPO; DERWENT; IBM_TDB)	OR	OFF	OFF	2018/11/26 02:03 PM
L30	351	380/264.ccls.	(US-PGPUB; USPAT; USOCR; FPRS; EPO; JPO; DERWENT; IBM_TDB)	OR	OFF	OFF	2018/11/26 02:03 PM
L31	134	380/276.ccls.	(US-PGPUB; USPAT; USOCR; FPRS; EPO; JPO; DERWENT; IBM_TDB)	OR	OFF	OFF	2018/11/26 02:04 PM
L32	0	L21 and L23	(US-PGPUB; USPAT; USOCR; FPRS; EPO; JPO; DERWENT; IBM_TDB)	OR	OFF	OFF	2018/11/26 02:04 PM
L33	0	L21 and L24	(US-PGPUB; USPAT; USOCR; FPRS; EPO; JPO; DERWENT; IBM_TDB)	OR	OFF	OFF	2018/11/26 02:04 PM
L34	0	L21 and L25	(US-PGPUB; USPAT; USOCR; FPRS; EPO; JPO; DERWENT; IBM_TDB)	OR	OFF	OFF	2018/11/26 02:04 PM
L35	0	L21 and L26	(US-PGPUB; USPAT; USOCR; FPRS; EPO; JPO; DERWENT; IBM_TDB)	OR	OFF	OFF	2018/11/26 02:04 PM
L36	0	L21 and L27	(US-PGPUB; USPAT; USOCR; FPRS; EPO; JPO; DERWENT; IBM_TDB)	OR	OFF	OFF	2018/11/26 02:04 PM
L37	0	L21 and L28	(US-PGPUB; USPAT; USOCR; FPRS; EPO;	OR	OFF	OFF	2018/11/26 02:04 PM

			JPO; DERWENT; IBM_TDB)				
L38	0	L21 and L29	(US-PGPUB; USPAT; USOCR; FPRS; EPO; JPO; DERWENT; IBM_TDB)	OR	OFF	OFF	2018/11/26 02:04 PM
L39	0	L21 and L30	(US-PGPUB; USPAT; USOCR; FPRS; EPO; JPO; DERWENT; IBM_TDB)	OR	OFF	OFF	2018/11/26 02:04 PM
L40	0	L21 and L31	(US-PGPUB; USPAT; USOCR; FPRS; EPO; JPO; DERWENT; IBM_TDB)	OR	OFF	OFF	2018/11/26 02:05 PM
L41	4	("20050000165"|"20140359552"|"20160006629"|"7171515").PN.	(US-PGPUB; USPAT)	OR	OFF	OFF	2018/11/26 02:07 PM
L48	32	"15237625"	(US-PGPUB; USPAT; USOCR; FPRS; EPO; JPO; DERWENT; IBM_TDB)	OR	OFF	OFF	2019/01/31 01:59 PM
L49	12163	726/23	(US-PGPUB; USPAT; USOCR; FPRS; EPO; JPO; DERWENT; IBM_TDB)	OR	OFF	OFF	2019/01/31 01:59 PM
L50	9487	726/23.ccls.	(US-PGPUB; USPAT; USOCR; FPRS; EPO; JPO; DERWENT; IBM_TDB)	OR	OFF	OFF	2019/01/31 01:59 PM
L51	32	"15237625"	(US-PGPUB; USPAT; USOCR; FPRS; EPO; JPO; DERWENT; IBM_TDB)	OR	OFF	OFF	2019/01/31 01:59 PM
L52	74	(jason near2 crabtree).inv.	(US-PGPUB; USPAT; USOCR; FPRS; EPO; JPO; DERWENT; IBM_TDB)	OR	OFF	OFF	2019/01/31 01:59 PM
L53	0	(fractal near2 industries).as.	(US-PGPUB; USPAT; USOCR; FPRS; EPO; JPO; DERWENT; IBM_TDB)	OR	OFF	OFF	2019/01/31 01:59 PM
L54	54	"14925974"	(US-PGPUB; USPAT; USOCR; FPRS; EPO; JPO; DERWENT; IBM_TDB)	OR	OFF	OFF	2019/01/31 01:59 PM
L55	0	("14925974").PN.	(US-PGPUB; USPAT; USOCR; FPRS; EPO; JPO; DERWENT; IBM_TDB)	OR	OFF	OFF	2019/01/31 01:59 PM
L56	0	("15237625").PN.	(US-PGPUB; USPAT; USOCR; FPRS; EPO; JPO; DERWENT; IBM_TDB)	OR	OFF	OFF	2019/01/31 01:59 PM

L57	18	L48 and (time series).clm.	(US-PGPUB; USPAT; USOCR; FPRS; EPO; JPO; DERWENT; IBM_TDB)	OR	OFF	OFF	2019/01/31 01:59 PM
L58	1	((predictive near2 planning) same (real near2 time near2 triage near2 analysis))	(US-PGPUB; USPAT; USOCR; FPRS; EPO; JPO; DERWENT; IBM_TDB)	OR	OFF	OFF	2019/01/31 01:59 PM
L59	3885161	((predictive near2 planning) same (real near2 time) with triage analysis)	(US-PGPUB; USPAT; USOCR; FPRS; EPO; JPO; DERWENT; IBM_TDB)	OR	OFF	OFF	2019/01/31 01:59 PM
L60	1	((predictive near2 planning) same (real near2 time) with triage with analysis)	(US-PGPUB; USPAT; USOCR; FPRS; EPO; JPO; DERWENT; IBM_TDB)	OR	OFF	OFF	2019/01/31 01:59 PM
L61	21	((real near2 time) with triage with analysis)	(US-PGPUB; USPAT; USOCR; FPRS; EPO; JPO; DERWENT; IBM_TDB)	OR	OFF	OFF	2019/01/31 01:59 PM
L62	0	L61 and (predicitve near2 planning)	(US-PGPUB; USPAT; USOCR; FPRS; EPO; JPO; DERWENT; IBM_TDB)	OR	OFF	OFF	2019/01/31 01:59 PM
L63	1	L61 and (cyber near3 attack$5)	(US-PGPUB; USPAT; USOCR; FPRS; EPO; JPO; DERWENT; IBM_TDB)	OR	OFF	OFF	2019/01/31 01:59 PM
L64	1	L61 and (cybersecurity)	(US-PGPUB; USPAT; USOCR; FPRS; EPO; JPO; DERWENT; IBM_TDB)	OR	OFF	OFF	2019/01/31 01:59 PM
L65	1	L61 and (cyber$1security)	(US-PGPUB; USPAT; USOCR; FPRS; EPO; JPO; DERWENT; IBM_TDB)	OR	OFF	OFF	2019/01/31 01:59 PM
L66	0	(predicitve near2 planning)	(US-PGPUB; USPAT; USOCR; FPRS; EPO; JPO; DERWENT; IBM_TDB)	OR	OFF	OFF	2019/01/31 01:59 PM
L67	646	(predictive near2 planning)	(US-PGPUB; USPAT; USOCR; FPRS; EPO; JPO; DERWENT; IBM_TDB)	OR	OFF	OFF	2019/01/31 01:59 PM
L68	5	L67 and (cyber$1security)	(US-PGPUB; USPAT; USOCR; FPRS; EPO; JPO; DERWENT; IBM_TDB)	OR	OFF	OFF	2019/01/31 01:59 PM
L69	5	L68 AND ((G06Q30/0202 OR G06Q40/04 OR G06Q10/0637 OR G06Q10/067 OR G06Q30/0201 OR	(US-PGPUB; USPAT; USOCR; FPRS; EPO; JPO; DERWENT; IBM_TDB)	OR	OFF	OFF	2019/01/31 01:59 PM

		G06Q30/0205 OR G06Q40/06 OR G06Q40/08 OR G06N5/04 OR G06N7/005 OR G06N99/005 OR H04L63/1425 OR H04L63/1441).CPC.)					
L70	8322	726/2.ccls.	(US-PGPUB; USPAT; USOCR; FPRS; EPO; JPO; DERWENT; IBM_TDB)	OR	OFF	OFF	2019/01/31 01:59 PM
L71	2948	726/21.ccls.	(US-PGPUB; USPAT; USOCR; FPRS; EPO; JPO; DERWENT; IBM_TDB)	OR	OFF	OFF	2019/01/31 01:59 PM
L72	365	726/36.ccls.	(US-PGPUB; USPAT; USOCR; FPRS; EPO; JPO; DERWENT; IBM_TDB)	OR	OFF	OFF	2019/01/31 01:59 PM
L73	5033	713/150.ccls.	(US-PGPUB; USPAT; USOCR; FPRS; EPO; JPO; DERWENT; IBM_TDB)	OR	OFF	OFF	2019/01/31 01:59 PM
L74	938	713/163.ccls.	(US-PGPUB; USPAT; USOCR; FPRS; EPO; JPO; DERWENT; IBM_TDB)	OR	OFF	OFF	2019/01/31 01:59 PM
L75	1772	713/181.ccls.	(US-PGPUB; USPAT; USOCR; FPRS; EPO; JPO; DERWENT; IBM_TDB)	OR	OFF	OFF	2019/01/31 01:59 PM
L76	3084	380/255.ccls.	(US-PGPUB; USPAT; USOCR; FPRS; EPO; JPO; DERWENT; IBM_TDB)	OR	OFF	OFF	2019/01/31 01:59 PM
L77	354	380/264.ccls.	(US-PGPUB; USPAT; USOCR; FPRS; EPO; JPO; DERWENT; IBM_TDB)	OR	OFF	OFF	2019/01/31 01:59 PM
L78	134	380/276.ccls.	(US-PGPUB; USPAT; USOCR; FPRS; EPO; JPO; DERWENT; IBM_TDB)	OR	OFF	OFF	2019/01/31 01:59 PM
L79	0	L68 and L70	(US-PGPUB; USPAT; USOCR; FPRS; EPO; JPO; DERWENT; IBM_TDB)	OR	OFF	OFF	2019/01/31 01:59 PM
L80	0	L68 and L71	(US-PGPUB; USPAT; USOCR; FPRS; EPO; JPO; DERWENT; IBM_TDB)	OR	OFF	OFF	2019/01/31 01:59 PM
L81	0	L68 and L72	(US-PGPUB; USPAT; USOCR; FPRS; EPO;	OR	OFF	OFF	2019/01/31 01:59 PM

			JPO; DERWENT; IBM_TDB)				
L82	0	L68 and L73	(US-PGPUB; USPAT; USOCR; FPRS; EPO; JPO; DERWENT; IBM_TDB)	OR	OFF	OFF	2019/01/31 01:59 PM
L83	0	L68 and L74	(US-PGPUB; USPAT; USOCR; FPRS; EPO; JPO; DERWENT; IBM_TDB)	OR	OFF	OFF	2019/01/31 01:59 PM
L84	0	L68 and L75	(US-PGPUB; USPAT; USOCR; FPRS; EPO; JPO; DERWENT; IBM_TDB)	OR	OFF	OFF	2019/01/31 01:59 PM
L85	0	L68 and L76	(US-PGPUB; USPAT; USOCR; FPRS; EPO; JPO; DERWENT; IBM_TDB)	OR	OFF	OFF	2019/01/31 01:59 PM
L86	0	L68 and L77	(US-PGPUB; USPAT; USOCR; FPRS; EPO; JPO; DERWENT; IBM_TDB)	OR	OFF	OFF	2019/01/31 01:59 PM
L87	0	L68 and L78	(US-PGPUB; USPAT; USOCR; FPRS; EPO; JPO; DERWENT; IBM_TDB)	OR	OFF	OFF	2019/01/31 01:59 PM
L88	4	("20050000165"|"20140359552"|"20160006629"|"7171515").PN.	(US-PGPUB; USPAT)	OR	OFF	OFF	2019/01/31 01:59 PM
L95	34	"15237625"	(US-PGPUB; USPAT; USOCR; FPRS; EPO; JPO; DERWENT; IBM_TDB)	OR	OFF	OFF	2019/06/21 11:40 PM
L96	12835	726/23	(US-PGPUB; USPAT; USOCR; FPRS; EPO; JPO; DERWENT; IBM_TDB)	OR	OFF	OFF	2019/06/21 11:40 PM
L97	9918	726/23.ccls.	(US-PGPUB; USPAT; USOCR; FPRS; EPO; JPO; DERWENT; IBM_TDB)	OR	OFF	OFF	2019/06/21 11:40 PM
L98	34	"15237625"	(US-PGPUB; USPAT; USOCR; FPRS; EPO; JPO; DERWENT; IBM_TDB)	OR	OFF	OFF	2019/06/21 11:40 PM
L99	88	(jason near2 crabtree).inv.	(US-PGPUB; USPAT; USOCR; FPRS; EPO; JPO; DERWENT; IBM_TDB)	OR	OFF	OFF	2019/06/21 11:40 PM
L100	4	(fractal near2 industries).as.	(US-PGPUB; USPAT; USOCR; FPRS; EPO; JPO; DERWENT; IBM_TDB)	OR	OFF	OFF	2019/06/21 11:40 PM

L101	56	"14925974"	(US-PGPUB; USPAT; USOCR; FPRS; EPO; JPO; DERWENT; IBM_TDB)	OR	OFF	OFF	2019/06/21 11:40 PM
L102	0	("14925974").PN.	(US-PGPUB; USPAT; USOCR; FPRS; EPO; JPO; DERWENT; IBM_TDB)	OR	OFF	OFF	2019/06/21 11:40 PM
L103	0	("15237625").PN.	(US-PGPUB; USPAT; USOCR; FPRS; EPO; JPO; DERWENT; IBM_TDB)	OR	OFF	OFF	2019/06/21 11:40 PM
L104	20	L95 and (time series).clm.	(US-PGPUB; USPAT; USOCR; FPRS; EPO; JPO; DERWENT; IBM_TDB)	OR	OFF	OFF	2019/06/21 11:40 PM
L105	2	((predictive near2 planning) same (real near2 time near2 triage near2 analysis))	(US-PGPUB; USPAT; USOCR; FPRS; EPO; JPO; DERWENT; IBM_TDB)	OR	OFF	OFF	2019/06/21 11:40 PM
L106	4018664	((predictive near2 planning) same (real near2 time) with triage analysis)	(US-PGPUB; USPAT; USOCR; FPRS; EPO; JPO; DERWENT; IBM_TDB)	OR	OFF	OFF	2019/06/21 11:40 PM
L107	2	((predictive near2 planning) same (real near2 time) with triage with analysis)	(US-PGPUB; USPAT; USOCR; FPRS; EPO; JPO; DERWENT; IBM_TDB)	OR	OFF	OFF	2019/06/21 11:40 PM
L108	23	((real near2 time) with triage with analysis)	(US-PGPUB; USPAT; USOCR; FPRS; EPO; JPO; DERWENT; IBM_TDB)	OR	OFF	OFF	2019/06/21 11:40 PM
L109	0	L108 and (predicitve near2 planning)	(US-PGPUB; USPAT; USOCR; FPRS; EPO; JPO; DERWENT; IBM_TDB)	OR	OFF	OFF	2019/06/21 11:40 PM
L110	2	L108 and (cyber near3 attack$5)	(US-PGPUB; USPAT; USOCR; FPRS; EPO; JPO; DERWENT; IBM_TDB)	OR	OFF	OFF	2019/06/21 11:40 PM
L111	2	L108 and (cybersecurity)	(US-PGPUB; USPAT; USOCR; FPRS; EPO; JPO; DERWENT; IBM_TDB)	OR	OFF	OFF	2019/06/21 11:40 PM
L112	2	L108 and (cyber$1security)	(US-PGPUB; USPAT; USOCR; FPRS; EPO; JPO; DERWENT; IBM_TDB)	OR	OFF	OFF	2019/06/21 11:40 PM
L113	0	(predicitve near2 planning)	(US-PGPUB; USPAT; USOCR; FPRS; EPO; JPO; DERWENT; IBM_TDB)	OR	OFF	OFF	2019/06/21 11:40 PM
L114	681	(predictive near2	(US-PGPUB; USPAT;	OR	OFF	OFF	2019/06/21

		planning)	USOCR; FPRS; EPO; JPO; DERWENT; IBM_TDB)				11:40 PM
L115	7	L114 and (cyber$1security)	(US-PGPUB; USPAT; USOCR; FPRS; EPO; JPO; DERWENT; IBM_TDB)	OR	OFF	OFF	2019/06/21 11:40 PM
L116	6	L115 AND ((G06Q30/0202 OR G06Q40/04 OR G06Q10/0637 OR G06Q10/067 OR G06Q30/0201 OR G06Q30/0205 OR G06Q40/06 OR G06Q40/08 OR G06N5/04 OR G06N7/005 OR G06N99/005 OR H04L63/1425 OR H04L63/1441).CPC.)	(US-PGPUB; USPAT; USOCR; FPRS; EPO; JPO; DERWENT; IBM_TDB)	OR	OFF	OFF	2019/06/21 11:40 PM
L117	8466	726/2.ccls.	(US-PGPUB; USPAT; USOCR; FPRS; EPO; JPO; DERWENT; IBM_TDB)	OR	OFF	OFF	2019/06/21 11:40 PM
L118	2992	726/21.ccls.	(US-PGPUB; USPAT; USOCR; FPRS; EPO; JPO; DERWENT; IBM_TDB)	OR	OFF	OFF	2019/06/21 11:40 PM
L119	375	726/36.ccls.	(US-PGPUB; USPAT; USOCR; FPRS; EPO; JPO; DERWENT; IBM_TDB)	OR	OFF	OFF	2019/06/21 11:40 PM
L120	5135	713/150.ccls.	(US-PGPUB; USPAT; USOCR; FPRS; EPO; JPO; DERWENT; IBM_TDB)	OR	OFF	OFF	2019/06/21 11:40 PM
L121	963	713/163.ccls.	(US-PGPUB; USPAT; USOCR; FPRS; EPO; JPO; DERWENT; IBM_TDB)	OR	OFF	OFF	2019/06/21 11:40 PM
L122	1821	713/181.ccls.	(US-PGPUB; USPAT; USOCR; FPRS; EPO; JPO; DERWENT; IBM_TDB)	OR	OFF	OFF	2019/06/21 11:40 PM
L123	3147	380/255.ccls.	(US-PGPUB; USPAT; USOCR; FPRS; EPO; JPO; DERWENT; IBM_TDB)	OR	OFF	OFF	2019/06/21 11:40 PM
L124	359	380/264.ccls.	(US-PGPUB; USPAT; USOCR; FPRS; EPO; JPO; DERWENT; IBM_TDB)	OR	OFF	OFF	2019/06/21 11:40 PM
L125	136	380/276.ccls.	(US-PGPUB; USPAT;	OR	OFF	OFF	2019/06/21

			USOCR; FPRS; EPO; JPO; DERWENT; IBM_TDB)				11:40 PM
L126	0	L115 and L117	(US-PGPUB; USPAT; USOCR; FPRS; EPO; JPO; DERWENT; IBM_TDB)	OR	OFF	OFF	2019/06/21 11:40 PM
L127	0	L115 and L118	(US-PGPUB; USPAT; USOCR; FPRS; EPO; JPO; DERWENT; IBM_TDB)	OR	OFF	OFF	2019/06/21 11:40 PM
L128	0	L115 and L119	(US-PGPUB; USPAT; USOCR; FPRS; EPO; JPO; DERWENT; IBM_TDB)	OR	OFF	OFF	2019/06/21 11:40 PM
L129	0	L115 and L120	(US-PGPUB; USPAT; USOCR; FPRS; EPO; JPO; DERWENT; IBM_TDB)	OR	OFF	OFF	2019/06/21 11:40 PM
L130	0	L115 and L121	(US-PGPUB; USPAT; USOCR; FPRS; EPO; JPO; DERWENT; IBM_TDB)	OR	OFF	OFF	2019/06/21 11:40 PM
L131	0	L115 and L122	(US-PGPUB; USPAT; USOCR; FPRS; EPO; JPO; DERWENT; IBM_TDB)	OR	OFF	OFF	2019/06/21 11:40 PM
L132	0	L115 and L123	(US-PGPUB; USPAT; USOCR; FPRS; EPO; JPO; DERWENT; IBM_TDB)	OR	OFF	OFF	2019/06/21 11:40 PM
L133	0	L115 and L124	(US-PGPUB; USPAT; USOCR; FPRS; EPO; JPO; DERWENT; IBM_TDB)	OR	OFF	OFF	2019/06/21 11:40 PM
L134	0	L115 and L125	(US-PGPUB; USPAT; USOCR; FPRS; EPO; JPO; DERWENT; IBM_TDB)	OR	OFF	OFF	2019/06/21 11:40 PM
L135	4	("20050000165"|"20140359552"|"20160006629"|"7171515").PN.	(US-PGPUB; USPAT)	OR	OFF	OFF	2019/06/21 11:40 PM
L136	34	"15237625"	(US-PGPUB; USPAT; USOCR; FPRS; EPO; JPO; DERWENT; IBM_TDB)	OR	OFF	OFF	2019/06/21 11:40 PM
L137	12835	726/23	(US-PGPUB; USPAT; USOCR; FPRS; EPO; JPO; DERWENT; IBM_TDB)	OR	OFF	OFF	2019/06/21 11:40 PM
L138	9918	726/23.ccls.	(US-PGPUB; USPAT; USOCR; FPRS; EPO; JPO; DERWENT;	OR	OFF	OFF	2019/06/21 11:40 PM

			IBM_TDB)				
L139	34	"15237625"	(US-PGPUB; USPAT; USOCR; FPRS; EPO; JPO; DERWENT; IBM_TDB)	OR	OFF	OFF	2019/06/21 11:40 PM
L140	88	(jason near2 crabtree).inv.	(US-PGPUB; USPAT; USOCR; FPRS; EPO; JPO; DERWENT; IBM_TDB)	OR	OFF	OFF	2019/06/21 11:40 PM
L141	4	(fractal near2 industries).as.	(US-PGPUB; USPAT; USOCR; FPRS; EPO; JPO; DERWENT; IBM_TDB)	OR	OFF	OFF	2019/06/21 11:40 PM
L142	56	"14925974"	(US-PGPUB; USPAT; USOCR; FPRS; EPO; JPO; DERWENT; IBM_TDB)	OR	OFF	OFF	2019/06/21 11:40 PM
L143	0	("14925974").PN.	(US-PGPUB; USPAT; USOCR; FPRS; EPO; JPO; DERWENT; IBM_TDB)	OR	OFF	OFF	2019/06/21 11:40 PM
L144	0	("15237625").PN.	(US-PGPUB; USPAT; USOCR; FPRS; EPO; JPO; DERWENT; IBM_TDB)	OR	OFF	OFF	2019/06/21 11:40 PM
L145	20	L136 and (time series).clm.	(US-PGPUB; USPAT; USOCR; FPRS; EPO; JPO; DERWENT; IBM_TDB)	OR	OFF	OFF	2019/06/21 11:40 PM
L146	2	((predictive near2 planning) same (real near2 time near2 triage near2 analysis))	(US-PGPUB; USPAT; USOCR; FPRS; EPO; JPO; DERWENT; IBM_TDB)	OR	OFF	OFF	2019/06/21 11:40 PM
L147	4018664	((predictive near2 planning) same (real near2 time) with triage analysis)	(US-PGPUB; USPAT; USOCR; FPRS; EPO; JPO; DERWENT; IBM_TDB)	OR	OFF	OFF	2019/06/21 11:40 PM
L148	2	((predictive near2 planning) same (real near2 time) with triage with analysis)	(US-PGPUB; USPAT; USOCR; FPRS; EPO; JPO; DERWENT; IBM_TDB)	OR	OFF	OFF	2019/06/21 11:40 PM
L149	23	((real near2 time) with triage with analysis)	(US-PGPUB; USPAT; USOCR; FPRS; EPO; JPO; DERWENT; IBM_TDB)	OR	OFF	OFF	2019/06/21 11:40 PM
L150	0	L149 and (predicitve near2 planning)	(US-PGPUB; USPAT; USOCR; FPRS; EPO; JPO; DERWENT; IBM_TDB)	OR	OFF	OFF	2019/06/21 11:40 PM
L151	2	L149 and (cyber near3 attack$5)	(US-PGPUB; USPAT; USOCR; FPRS; EPO; JPO; DERWENT; IBM_TDB)	OR	OFF	OFF	2019/06/21 11:40 PM

L152	2	L149 and (cybersecurity)	(US-PGPUB; USPAT; USOCR; FPRS; EPO; JPO; DERWENT; IBM_TDB)	OR	OFF	OFF	2019/06/21 11:40 PM
L153	2	L149 and (cyber$1security)	(US-PGPUB; USPAT; USOCR; FPRS; EPO; JPO; DERWENT; IBM_TDB)	OR	OFF	OFF	2019/06/21 11:40 PM
L154	0	(predicitve near2 planning)	(US-PGPUB; USPAT; USOCR; FPRS; EPO; JPO; DERWENT; IBM_TDB)	OR	OFF	OFF	2019/06/21 11:40 PM
L155	681	(predictive near2 planning)	(US-PGPUB; USPAT; USOCR; FPRS; EPO; JPO; DERWENT; IBM_TDB)	OR	OFF	OFF	2019/06/21 11:40 PM
L156	7	L155 and (cyber$1security)	(US-PGPUB; USPAT; USOCR; FPRS; EPO; JPO; DERWENT; IBM_TDB)	OR	OFF	OFF	2019/06/21 11:40 PM
L157	6	L156 AND ((G06Q30/0202 OR G06Q40/04 OR G06Q10/0637 OR G06Q10/067 OR G06Q30/0201 OR G06Q30/0205 OR G06Q40/06 OR G06Q40/08 OR G06N5/04 OR G06N7/005 OR G06N99/005 OR H04L63/1425 OR H04L63/1441).CPC.)	(US-PGPUB; USPAT; USOCR; FPRS; EPO; JPO; DERWENT; IBM_TDB)	OR	OFF	OFF	2019/06/21 11:40 PM
L158	8466	726/2.ccls.	(US-PGPUB; USPAT; USOCR; FPRS; EPO; JPO; DERWENT; IBM_TDB)	OR	OFF	OFF	2019/06/21 11:40 PM
L159	2992	726/21.ccls.	(US-PGPUB; USPAT; USOCR; FPRS; EPO; JPO; DERWENT; IBM_TDB)	OR	OFF	OFF	2019/06/21 11:40 PM
L160	375	726/36.ccls.	(US-PGPUB; USPAT; USOCR; FPRS; EPO; JPO; DERWENT; IBM_TDB)	OR	OFF	OFF	2019/06/21 11:40 PM
L161	5135	713/150.ccls.	(US-PGPUB; USPAT; USOCR; FPRS; EPO; JPO; DERWENT; IBM_TDB)	OR	OFF	OFF	2019/06/21 11:40 PM
L162	963	713/163.ccls.	(US-PGPUB; USPAT; USOCR; FPRS; EPO; JPO; DERWENT; IBM_TDB)	OR	OFF	OFF	2019/06/21 11:40 PM

L163	1821	713/181.ccls.	(US-PGPUB; USPAT; USOCR; FPRS; EPO; JPO; DERWENT; IBM_TDB)	OR	OFF	OFF	2019/06/21 11:40 PM
L164	3147	380/255.ccls.	(US-PGPUB; USPAT; USOCR; FPRS; EPO; JPO; DERWENT; IBM_TDB)	OR	OFF	OFF	2019/06/21 11:40 PM
L165	359	380/264.ccls.	(US-PGPUB; USPAT; USOCR; FPRS; EPO; JPO; DERWENT; IBM_TDB)	OR	OFF	OFF	2019/06/21 11:40 PM
L166	136	380/276.ccls.	(US-PGPUB; USPAT; USOCR; FPRS; EPO; JPO; DERWENT; IBM_TDB)	OR	OFF	OFF	2019/06/21 11:40 PM
L167	0	L156 and L158	(US-PGPUB; USPAT; USOCR; FPRS; EPO; JPO; DERWENT; IBM_TDB)	OR	OFF	OFF	2019/06/21 11:40 PM
L168	0	L156 and L159	(US-PGPUB; USPAT; USOCR; FPRS; EPO; JPO; DERWENT; IBM_TDB)	OR	OFF	OFF	2019/06/21 11:40 PM
L169	0	L156 and L160	(US-PGPUB; USPAT; USOCR; FPRS; EPO; JPO; DERWENT; IBM_TDB)	OR	OFF	OFF	2019/06/21 11:40 PM
L170	0	L156 and L161	(US-PGPUB; USPAT; USOCR; FPRS; EPO; JPO; DERWENT; IBM_TDB)	OR	OFF	OFF	2019/06/21 11:40 PM
L171	0	L156 and L162	(US-PGPUB; USPAT; USOCR; FPRS; EPO; JPO; DERWENT; IBM_TDB)	OR	OFF	OFF	2019/06/21 11:40 PM
L172	0	L156 and L163	(US-PGPUB; USPAT; USOCR; FPRS; EPO; JPO; DERWENT; IBM_TDB)	OR	OFF	OFF	2019/06/21 11:40 PM
L173	0	L156 and L164	(US-PGPUB; USPAT; USOCR; FPRS; EPO; JPO; DERWENT; IBM_TDB)	OR	OFF	OFF	2019/06/21 11:40 PM
L174	0	L156 and L165	(US-PGPUB; USPAT; USOCR; FPRS; EPO; JPO; DERWENT; IBM_TDB)	OR	OFF	OFF	2019/06/21 11:40 PM
L175	0	L156 and L166	(US-PGPUB; USPAT; USOCR; FPRS; EPO; JPO; DERWENT; IBM_TDB)	OR	OFF	OFF	2019/06/21 11:40 PM
L176	4	("20050000165"|"20140	(US-PGPUB; USPAT)	OR	OFF	OFF	2019/06/21

		359552"|"20160006629"|"7171515").PN.					11:40 PM
L177	23	L99 and (time near2 series).clm.	(US-PGPUB; USPAT; USOCR; FPRS; EPO; JPO; DERWENT; IBM_TDB)	OR	OFF	OFF	2019/06/21 11:57 PM
L178	11	L99 and ((time near2 series) with multi$dimensional).clm.	(US-PGPUB; USPAT; USOCR; FPRS; EPO; JPO; DERWENT; IBM_TDB)	OR	OFF	OFF	2019/06/21 11:57 PM
L179	2	("20160275123"|"6256544").PN.	(US-PGPUB; USPAT)	OR	OFF	OFF	2019/06/22 12:07 AM
L180	1	"15790860"	(US-PGPUB; USPAT; USOCR; FPRS; EPO; JPO; DERWENT; IBM_TDB)	OR	OFF	OFF	2019/06/22 12:16 AM
L181	6	"20150020199"	(US-PGPUB; USPAT; USOCR; FPRS; EPO; JPO; DERWENT; IBM_TDB)	OR	OFF	OFF	2019/06/22 12:17 AM
L182	8	"20160006629"	(US-PGPUB; USPAT; USOCR; FPRS; EPO; JPO; DERWENT; IBM_TDB)	OR	OFF	OFF	2019/06/22 01:08 AM
L183	3	"20140359552"	(US-PGPUB; USPAT; USOCR; FPRS; EPO; JPO; DERWENT; IBM_TDB)	OR	OFF	OFF	2019/06/22 01:09 AM
L184	7	(US-20160006629-$ or US-20140359552-$ or US-20050000165-$ or US-20160275123-$ or US-20150020199-$).did. or (US-7171515-$ or US-6256544-$).did.	(US-PGPUB; USPAT)	OR	OFF	OFF	2019/06/22 01:27 AM
L185	0	L184 and (network with traffice with monitor$5)	(US-PGPUB; USPAT; USOCR; FPRS; EPO; JPO; DERWENT; IBM_TDB)	OR	OFF	OFF	2019/06/22 01:28 AM
L186	1	L184 and (network with traffic with monitor$5)	(US-PGPUB; USPAT; USOCR; FPRS; EPO; JPO; DERWENT; IBM_TDB)	OR	OFF	OFF	2019/06/22 01:28 AM
L187	1	L184 and (network with traffic with (scan$5 or monitor$5))	(US-PGPUB; USPAT; USOCR; FPRS; EPO; JPO; DERWENT; IBM_TDB)	OR	OFF	OFF	2019/06/22 01:28 AM
L188	1	L184 and (network with (flow$1 or traffic) with (scan$5 or monitor$5))	(US-PGPUB; USPAT; USOCR; FPRS; EPO; JPO; DERWENT; IBM_TDB)	OR	OFF	OFF	2019/06/22 01:28 AM
L189	1	L184 and (network near3 (scan$5 or	(US-PGPUB; USPAT; USOCR; FPRS; EPO;	OR	OFF	OFF	2019/06/22 01:29 AM

		monitor$5))	JPO; DERWENT; IBM_TDB)				
L190	5	L184 and (baseline$1 or threshold$1 or limit$1)	(US-PGPUB; USPAT; USOCR; FPRS; EPO; JPO; DERWENT; IBM_TDB)	OR	OFF	OFF	2019/06/22 01:31 AM
L191	1	L184 and (score$1)	(US-PGPUB; USPAT; USOCR; FPRS; EPO; JPO; DERWENT; IBM_TDB)	OR	OFF	OFF	2019/06/22 01:41 AM
L192	6	"20130117852"	(US-PGPUB; USPAT; USOCR; FPRS; EPO; JPO; DERWENT; IBM_TDB)	OR	OFF	OFF	2019/06/22 01:42 AM
L193	3	"20070226796"	(US-PGPUB; USPAT; USOCR; FPRS; EPO; JPO; DERWENT; IBM_TDB)	OR	OFF	OFF	2019/06/22 01:42 AM
L194	10	(US-20160006629-$ or US-20140359552-$ or US-20050000165-$ or US-20160275123-$ or US-20150020199-$ or US-20130117852-$ or US-20070226796-$).did. or (US-7171515-$ or US-6256544-$).did. or (US-20070226796-$).did.	(US-PGPUB; USPAT; DERWENT)	OR	OFF	OFF	2019/06/22 01:42 AM
L195	2	L194 and (score$1)	(US-PGPUB; USPAT; USOCR; FPRS; EPO; JPO; DERWENT; IBM_TDB)	OR	OFF	OFF	2019/06/22 01:42 AM
L196	260473	(network near3 (monitor$5 or scan$5))	(US-PGPUB; USPAT; USOCR; FPRS; EPO; JPO; DERWENT; IBM_TDB)	OR	OFF	OFF	2019/06/22 01:44 AM
L209	260955	(network near3 (monitor$5 or scan$5))	(US-PGPUB; USPAT; USOCR; FPRS; EPO; JPO; DERWENT; IBM_TDB)	OR	OFF	OFF	2019/06/22 01:46 AM
L210	596	L209 and (score with access$6 with (resource$1 or content or application$1 or program$1))	(US-PGPUB; USPAT; USOCR; FPRS; EPO; JPO; DERWENT; IBM_TDB)	OR	OFF	OFF	2019/06/22 01:46 AM
L211	330	L210 and @ad<"20151028"	(US-PGPUB; USPAT; USOCR; FPRS; EPO; JPO; DERWENT; IBM_TDB)	OR	OFF	OFF	2019/06/22 01:46 AM
L212	7	L211 and (score with (security or threat) with level$1 with (resource$1 or content	(US-PGPUB; USPAT; USOCR; FPRS; EPO; JPO; DERWENT; IBM_TDB)	OR	OFF	OFF	2019/06/22 01:47 AM

		or application$1 or program$1))					
L213	0	L212 and (score$1 with connection)	(US-PGPUB; USPAT; USOCR; FPRS; EPO; JPO; DERWENT; IBM_TDB)	OR	OFF	OFF	2019/06/22 01:48 AM
L214	1	L212 and (score$1 with media)	(US-PGPUB; USPAT; USOCR; FPRS; EPO; JPO; DERWENT; IBM_TDB)	OR	OFF	OFF	2019/06/22 01:48 AM
L215	11	(US-20160006629-$ or US-20140359552-$ or US-20050000165-$ or US-20160275123-$ or US-20150020199-$ or US-20130117852-$ or US-20070226796-$ or US-20130111592-$).did. or (US-7171515-$ or US-6256544-$).did. or (US-20070226796-$).did.	(US-PGPUB; USPAT; DERWENT)	OR	OFF	OFF	2019/12/16 01:05 AM
L216	0	L215 and (score$1 with (verification or authentication))	(US-PGPUB; USPAT; USOCR; FPRS; EPO; JPO; DERWENT; IBM_TDB)	OR	OFF	OFF	2019/12/16 01:05 AM
L217	0	L215 and (score$1 same (verification or authentication))	(US-PGPUB; USPAT; USOCR; FPRS; EPO; JPO; DERWENT; IBM_TDB)	OR	OFF	OFF	2019/12/16 01:05 AM
L218	2	L215 and ((verification or authentication))	(US-PGPUB; USPAT; USOCR; FPRS; EPO; JPO; DERWENT; IBM_TDB)	OR	OFF	OFF	2019/12/16 01:06 AM
L219	10	L215 and (access$4 or permission$1)	(US-PGPUB; USPAT; USOCR; FPRS; EPO; JPO; DERWENT; IBM_TDB)	OR	OFF	OFF	2019/12/16 01:06 AM
L220	44	"15237625"	(US-PGPUB; USPAT; USOCR; FPRS; EPO; JPO; DERWENT; IBM_TDB)	OR	OFF	OFF	2020/03/31 02:28 PM
L221	14367	726/23	(US-PGPUB; USPAT; USOCR; FPRS; EPO; JPO; DERWENT; IBM_TDB)	OR	OFF	OFF	2020/03/31 02:28 PM
L222	9800	726/23.ccls.	(US-PGPUB; USPAT; USOCR; FPRS; EPO; JPO; DERWENT; IBM_TDB)	OR	OFF	OFF	2020/03/31 02:28 PM
L223	44	"15237625"	(US-PGPUB; USPAT; USOCR; FPRS; EPO; JPO; DERWENT; IBM_TDB)	OR	OFF	OFF	2020/03/31 02:28 PM

L224	125	(jason near2 crabtree).inv.	(US-PGPUB; USPAT; USOCR; FPRS; EPO; JPO; DERWENT; IBM_TDB)	OR	OFF	OFF	2020/03/31 02:28 PM
L225	4	(fractal near2 industries).as.	(US-PGPUB; USPAT; USOCR; FPRS; EPO; JPO; DERWENT; IBM_TDB)	OR	OFF	OFF	2020/03/31 02:28 PM
L226	68	"14925974"	(US-PGPUB; USPAT; USOCR; FPRS; EPO; JPO; DERWENT; IBM_TDB)	OR	OFF	OFF	2020/03/31 02:28 PM
L227	0	("14925974").PN.	(US-PGPUB; USPAT; USOCR; FPRS; EPO; JPO; DERWENT; IBM_TDB)	OR	OFF	OFF	2020/03/31 02:28 PM
L228	0	("15237625").PN.	(US-PGPUB; USPAT; USOCR; FPRS; EPO; JPO; DERWENT; IBM_TDB)	OR	OFF	OFF	2020/03/31 02:28 PM
L229	27	L220 and (time series).clm.	(US-PGPUB; USPAT; USOCR; FPRS; EPO; JPO; DERWENT; IBM_TDB)	OR	OFF	OFF	2020/03/31 02:28 PM
L230	2	((predictive near2 planning) same (real near2 time near2 triage near2 analysis))	(US-PGPUB; USPAT; USOCR; FPRS; EPO; JPO; DERWENT; IBM_TDB)	OR	OFF	OFF	2020/03/31 02:28 PM
L231	4322122	((predictive near2 planning) same (real near2 time) with triage analysis)	(US-PGPUB; USPAT; USOCR; FPRS; EPO; JPO; DERWENT; IBM_TDB)	OR	OFF	OFF	2020/03/31 02:28 PM
L232	2	((predictive near2 planning) same (real near2 time) with triage with analysis)	(US-PGPUB; USPAT; USOCR; FPRS; EPO; JPO; DERWENT; IBM_TDB)	OR	OFF	OFF	2020/03/31 02:28 PM
L233	25	((real near2 time) with triage with analysis)	(US-PGPUB; USPAT; USOCR; FPRS; EPO; JPO; DERWENT; IBM_TDB)	OR	OFF	OFF	2020/03/31 02:28 PM
L234	0	L233 and (predicitve near2 planning)	(US-PGPUB; USPAT; USOCR; FPRS; EPO; JPO; DERWENT; IBM_TDB)	OR	OFF	OFF	2020/03/31 02:28 PM
L235	2	L233 and (cyber near3 attack$5)	(US-PGPUB; USPAT; USOCR; FPRS; EPO; JPO; DERWENT; IBM_TDB)	OR	OFF	OFF	2020/03/31 02:28 PM
L236	2	L233 and (cybersecurity)	(US-PGPUB; USPAT; USOCR; FPRS; EPO; JPO; DERWENT; IBM_TDB)	OR	OFF	OFF	2020/03/31 02:28 PM
L237	2	L233 and	(US-PGPUB; USPAT;	OR	OFF	OFF	2020/03/31

		(cyber$1security)	USOCR; FPRS; EPO; JPO; DERWENT; IBM_TDB)				02:28 PM
L238	0	(predicitve near2 planning)	(US-PGPUB; USPAT; USOCR; FPRS; EPO; JPO; DERWENT; IBM_TDB)	OR	OFF	OFF	2020/03/31 02:28 PM
L239	748	(predictive near2 planning)	(US-PGPUB; USPAT; USOCR; FPRS; EPO; JPO; DERWENT; IBM_TDB)	OR	OFF	OFF	2020/03/31 02:28 PM
L240	8	L239 and (cyber$1security)	(US-PGPUB; USPAT; USOCR; FPRS; EPO; JPO; DERWENT; IBM_TDB)	OR	OFF	OFF	2020/03/31 02:28 PM
L241	7	L240 AND ((G06Q30/0202 OR G06Q40/04 OR G06Q10/0637 OR G06Q10/067 OR G06Q30/0201 OR G06Q30/0205 OR G06Q40/06 OR G06Q40/08 OR G06N5/04 OR G06N7/005 OR G06N99/005 OR H04L63/1425 OR H04L63/1441).CPC.)	(US-PGPUB; USPAT; USOCR; FPRS; EPO; JPO; DERWENT; IBM_TDB)	OR	OFF	OFF	2020/03/31 02:28 PM
L242	8604	726/2.ccls.	(US-PGPUB; USPAT; USOCR; FPRS; EPO; JPO; DERWENT; IBM_TDB)	OR	OFF	OFF	2020/03/31 02:28 PM
L243	3036	726/21.ccls.	(US-PGPUB; USPAT; USOCR; FPRS; EPO; JPO; DERWENT; IBM_TDB)	OR	OFF	OFF	2020/03/31 02:28 PM
L244	384	726/36.ccls.	(US-PGPUB; USPAT; USOCR; FPRS; EPO; JPO; DERWENT; IBM_TDB)	OR	OFF	OFF	2020/03/31 02:28 PM
L245	5181	713/150.ccls.	(US-PGPUB; USPAT; USOCR; FPRS; EPO; JPO; DERWENT; IBM_TDB)	OR	OFF	OFF	2020/03/31 02:28 PM
L246	973	713/163.ccls.	(US-PGPUB; USPAT; USOCR; FPRS; EPO; JPO; DERWENT; IBM_TDB)	OR	OFF	OFF	2020/03/31 02:28 PM
L247	1850	713/181.ccls.	(US-PGPUB; USPAT; USOCR; FPRS; EPO; JPO; DERWENT; IBM_TDB)	OR	OFF	OFF	2020/03/31 02:28 PM
L248	3222	380/255.ccls.	(US-PGPUB; USPAT;	OR	OFF	OFF	2020/03/31

			USOCR; FPRS; EPO; JPO; DERWENT; IBM_TDB)				02:28 PM
L249	361	380/264.ccls.	(US-PGPUB; USPAT; USOCR; FPRS; EPO; JPO; DERWENT; IBM_TDB)	OR	OFF	OFF	2020/03/31 02:28 PM
L250	137	380/276.ccls.	(US-PGPUB; USPAT; USOCR; FPRS; EPO; JPO; DERWENT; IBM_TDB)	OR	OFF	OFF	2020/03/31 02:28 PM
L251	0	L240 and L242	(US-PGPUB; USPAT; USOCR; FPRS; EPO; JPO; DERWENT; IBM_TDB)	OR	OFF	OFF	2020/03/31 02:28 PM
L252	0	L240 and L243	(US-PGPUB; USPAT; USOCR; FPRS; EPO; JPO; DERWENT; IBM_TDB)	OR	OFF	OFF	2020/03/31 02:28 PM
L253	0	L240 and L244	(US-PGPUB; USPAT; USOCR; FPRS; EPO; JPO; DERWENT; IBM_TDB)	OR	OFF	OFF	2020/03/31 02:28 PM
L254	0	L240 and L245	(US-PGPUB; USPAT; USOCR; FPRS; EPO; JPO; DERWENT; IBM_TDB)	OR	OFF	OFF	2020/03/31 02:28 PM
L255	0	L240 and L246	(US-PGPUB; USPAT; USOCR; FPRS; EPO; JPO; DERWENT; IBM_TDB)	OR	OFF	OFF	2020/03/31 02:28 PM
L256	0	L240 and L247	(US-PGPUB; USPAT; USOCR; FPRS; EPO; JPO; DERWENT; IBM_TDB)	OR	OFF	OFF	2020/03/31 02:28 PM
L257	0	L240 and L248	(US-PGPUB; USPAT; USOCR; FPRS; EPO; JPO; DERWENT; IBM_TDB)	OR	OFF	OFF	2020/03/31 02:28 PM
L258	0	L240 and L249	(US-PGPUB; USPAT; USOCR; FPRS; EPO; JPO; DERWENT; IBM_TDB)	OR	OFF	OFF	2020/03/31 02:28 PM
L259	0	L240 and L250	(US-PGPUB; USPAT; USOCR; FPRS; EPO; JPO; DERWENT; IBM_TDB)	OR	OFF	OFF	2020/03/31 02:28 PM
L260	4	("20050000165"|"20140359552"|"20160006629"|"7171515").PN.	(US-PGPUB; USPAT)	OR	OFF	OFF	2020/03/31 02:28 PM
L261	44	"15237625"	(US-PGPUB; USPAT; USOCR; FPRS; EPO; JPO; DERWENT;	OR	OFF	OFF	2020/03/31 02:28 PM

			IBM_TDB)				
L262	14367	726/23	(US-PGPUB; USPAT; USOCR; FPRS; EPO; JPO; DERWENT; IBM_TDB)	OR	OFF	OFF	2020/03/31 02:28 PM
L263	9800	726/23.ccls.	(US-PGPUB; USPAT; USOCR; FPRS; EPO; JPO; DERWENT; IBM_TDB)	OR	OFF	OFF	2020/03/31 02:28 PM
L264	44	"15237625"	(US-PGPUB; USPAT; USOCR; FPRS; EPO; JPO; DERWENT; IBM_TDB)	OR	OFF	OFF	2020/03/31 02:28 PM
L265	125	(jason near2 crabtree).inv.	(US-PGPUB; USPAT; USOCR; FPRS; EPO; JPO; DERWENT; IBM_TDB)	OR	OFF	OFF	2020/03/31 02:28 PM
L266	4	(fractal near2 industries).as.	(US-PGPUB; USPAT; USOCR; FPRS; EPO; JPO; DERWENT; IBM_TDB)	OR	OFF	OFF	2020/03/31 02:28 PM
L267	68	"14925974"	(US-PGPUB; USPAT; USOCR; FPRS; EPO; JPO; DERWENT; IBM_TDB)	OR	OFF	OFF	2020/03/31 02:28 PM
L268	0	("14925974").PN.	(US-PGPUB; USPAT; USOCR; FPRS; EPO; JPO; DERWENT; IBM_TDB)	OR	OFF	OFF	2020/03/31 02:28 PM
L269	0	("15237625").PN.	(US-PGPUB; USPAT; USOCR; FPRS; EPO; JPO; DERWENT; IBM_TDB)	OR	OFF	OFF	2020/03/31 02:28 PM
L270	27	L261 and (time series).clm.	(US-PGPUB; USPAT; USOCR; FPRS; EPO; JPO; DERWENT; IBM_TDB)	OR	OFF	OFF	2020/03/31 02:29 PM
L271	2	((predictive near2 planning) same (real near2 time near2 triage near2 analysis))	(US-PGPUB; USPAT; USOCR; FPRS; EPO; JPO; DERWENT; IBM_TDB)	OR	OFF	OFF	2020/03/31 02:29 PM
L272	4322122	((predictive near2 planning) same (real near2 time) with triage analysis)	(US-PGPUB; USPAT; USOCR; FPRS; EPO; JPO; DERWENT; IBM_TDB)	OR	OFF	OFF	2020/03/31 02:29 PM
L273	2	((predictive near2 planning) same (real near2 time) with triage with analysis)	(US-PGPUB; USPAT; USOCR; FPRS; EPO; JPO; DERWENT; IBM_TDB)	OR	OFF	OFF	2020/03/31 02:29 PM
L274	25	((real near2 time) with triage with analysis)	(US-PGPUB; USPAT; USOCR; FPRS; EPO; JPO; DERWENT; IBM_TDB)	OR	OFF	OFF	2020/03/31 02:29 PM

L275	0	L274 and (predicitve near2 planning)	(US-PGPUB; USPAT; USOCR; FPRS; EPO; JPO; DERWENT; IBM_TDB)	OR	OFF	OFF	2020/03/31 02:29 PM
L276	2	L274 and (cyber near3 attack$5)	(US-PGPUB; USPAT; USOCR; FPRS; EPO; JPO; DERWENT; IBM_TDB)	OR	OFF	OFF	2020/03/31 02:29 PM
L277	2	L274 and (cybersecurity)	(US-PGPUB; USPAT; USOCR; FPRS; EPO; JPO; DERWENT; IBM_TDB)	OR	OFF	OFF	2020/03/31 02:29 PM
L278	2	L274 and (cyber$1security)	(US-PGPUB; USPAT; USOCR; FPRS; EPO; JPO; DERWENT; IBM_TDB)	OR	OFF	OFF	2020/03/31 02:29 PM
L279	0	(predicitve near2 planning)	(US-PGPUB; USPAT; USOCR; FPRS; EPO; JPO; DERWENT; IBM_TDB)	OR	OFF	OFF	2020/03/31 02:29 PM
L280	748	(predictive near2 planning)	(US-PGPUB; USPAT; USOCR; FPRS; EPO; JPO; DERWENT; IBM_TDB)	OR	OFF	OFF	2020/03/31 02:29 PM
L281	8	L280 and (cyber$1security)	(US-PGPUB; USPAT; USOCR; FPRS; EPO; JPO; DERWENT; IBM_TDB)	OR	OFF	OFF	2020/03/31 02:29 PM
L282	7	L281 AND ((G06Q30/0202 OR G06Q40/04 OR G06Q10/0637 OR G06Q10/067 OR G06Q30/0201 OR G06Q30/0205 OR G06Q40/06 OR G06Q40/08 OR G06N5/04 OR G06N7/005 OR G06N99/005 OR H04L63/1425 OR H04L63/1441).CPC.)	(US-PGPUB; USPAT; USOCR; FPRS; EPO; JPO; DERWENT; IBM_TDB)	OR	OFF	OFF	2020/03/31 02:29 PM
L283	8604	726/2.ccls.	(US-PGPUB; USPAT; USOCR; FPRS; EPO; JPO; DERWENT; IBM_TDB)	OR	OFF	OFF	2020/03/31 02:29 PM
L284	3036	726/21.ccls.	(US-PGPUB; USPAT; USOCR; FPRS; EPO; JPO; DERWENT; IBM_TDB)	OR	OFF	OFF	2020/03/31 02:29 PM
L285	384	726/36.ccls.	(US-PGPUB; USPAT; USOCR; FPRS; EPO; JPO; DERWENT; IBM_TDB)	OR	OFF	OFF	2020/03/31 02:29 PM

L286	5181	713/150.ccls.	(US-PGPUB; USPAT; USOCR; FPRS; EPO; JPO; DERWENT; IBM_TDB)	OR	OFF	OFF	2020/03/31 02:29 PM
L287	973	713/163.ccls.	(US-PGPUB; USPAT; USOCR; FPRS; EPO; JPO; DERWENT; IBM_TDB)	OR	OFF	OFF	2020/03/31 02:29 PM
L288	1850	713/181.ccls.	(US-PGPUB; USPAT; USOCR; FPRS; EPO; JPO; DERWENT; IBM_TDB)	OR	OFF	OFF	2020/03/31 02:29 PM
L289	3222	380/255.ccls.	(US-PGPUB; USPAT; USOCR; FPRS; EPO; JPO; DERWENT; IBM_TDB)	OR	OFF	OFF	2020/03/31 02:29 PM
L290	361	380/264.ccls.	(US-PGPUB; USPAT; USOCR; FPRS; EPO; JPO; DERWENT; IBM_TDB)	OR	OFF	OFF	2020/03/31 02:29 PM
L291	137	380/276.ccls.	(US-PGPUB; USPAT; USOCR; FPRS; EPO; JPO; DERWENT; IBM_TDB)	OR	OFF	OFF	2020/03/31 02:29 PM
L292	0	L281 and L283	(US-PGPUB; USPAT; USOCR; FPRS; EPO; JPO; DERWENT; IBM_TDB)	OR	OFF	OFF	2020/03/31 02:29 PM
L293	0	L281 and L284	(US-PGPUB; USPAT; USOCR; FPRS; EPO; JPO; DERWENT; IBM_TDB)	OR	OFF	OFF	2020/03/31 02:29 PM
L294	0	L281 and L285	(US-PGPUB; USPAT; USOCR; FPRS; EPO; JPO; DERWENT; IBM_TDB)	OR	OFF	OFF	2020/03/31 02:29 PM
L295	0	L281 and L286	(US-PGPUB; USPAT; USOCR; FPRS; EPO; JPO; DERWENT; IBM_TDB)	OR	OFF	OFF	2020/03/31 02:29 PM
L296	0	L281 and L287	(US-PGPUB; USPAT; USOCR; FPRS; EPO; JPO; DERWENT; IBM_TDB)	OR	OFF	OFF	2020/03/31 02:29 PM
L297	0	L281 and L288	(US-PGPUB; USPAT; USOCR; FPRS; EPO; JPO; DERWENT; IBM_TDB)	OR	OFF	OFF	2020/03/31 02:29 PM
L298	0	L281 and L289	(US-PGPUB; USPAT; USOCR; FPRS; EPO; JPO; DERWENT; IBM_TDB)	OR	OFF	OFF	2020/03/31 02:29 PM
L299	0	L281 and L290	(US-PGPUB; USPAT;	OR	OFF	OFF	2020/03/31

			USOCR; FPRS; EPO; JPO; DERWENT; IBM_TDB)				02:29 PM
L300	0	L281 and L291	(US-PGPUB; USPAT; USOCR; FPRS; EPO; JPO; DERWENT; IBM_TDB)	OR	OFF	OFF	2020/03/31 02:29 PM
L301	4	("20050000165"|"20140359552"|"20160006629"|"7171515").PN.	(US-PGPUB; USPAT)	OR	OFF	OFF	2020/03/31 02:29 PM
L302	44	"15237625"	(US-PGPUB; USPAT; USOCR; FPRS; EPO; JPO; DERWENT; IBM_TDB)	OR	OFF	OFF	2020/03/31 02:29 PM
L303	14367	726/23	(US-PGPUB; USPAT; USOCR; FPRS; EPO; JPO; DERWENT; IBM_TDB)	OR	OFF	OFF	2020/03/31 02:29 PM
L304	9800	726/23.ccls.	(US-PGPUB; USPAT; USOCR; FPRS; EPO; JPO; DERWENT; IBM_TDB)	OR	OFF	OFF	2020/03/31 02:29 PM
L305	44	"15237625"	(US-PGPUB; USPAT; USOCR; FPRS; EPO; JPO; DERWENT; IBM_TDB)	OR	OFF	OFF	2020/03/31 02:29 PM
L306	125	(jason near2 crabtree).inv.	(US-PGPUB; USPAT; USOCR; FPRS; EPO; JPO; DERWENT; IBM_TDB)	OR	OFF	OFF	2020/03/31 02:29 PM
L307	4	(fractal near2 industries).as.	(US-PGPUB; USPAT; USOCR; FPRS; EPO; JPO; DERWENT; IBM_TDB)	OR	OFF	OFF	2020/03/31 02:29 PM
L308	68	"14925974"	(US-PGPUB; USPAT; USOCR; FPRS; EPO; JPO; DERWENT; IBM_TDB)	OR	OFF	OFF	2020/03/31 02:29 PM
L309	0	("14925974").PN.	(US-PGPUB; USPAT; USOCR; FPRS; EPO; JPO; DERWENT; IBM_TDB)	OR	OFF	OFF	2020/03/31 02:29 PM
L310	0	("15237625").PN.	(US-PGPUB; USPAT; USOCR; FPRS; EPO; JPO; DERWENT; IBM_TDB)	OR	OFF	OFF	2020/03/31 02:29 PM
L311	27	L302 and (time series).clm.	(US-PGPUB; USPAT; USOCR; FPRS; EPO; JPO; DERWENT; IBM_TDB)	OR	OFF	OFF	2020/03/31 02:29 PM
L312	2	((predictive near2 planning) same (real near2 time near2 triage	(US-PGPUB; USPAT; USOCR; FPRS; EPO; JPO; DERWENT;	OR	OFF	OFF	2020/03/31 02:29 PM

		near2 analysis))	IBM_TDB)				
L313	4322122	((predictive near2 planning) same (real near2 time) with triage analysis)	(US-PGPUB; USPAT; USOCR; FPRS; EPO; JPO; DERWENT; IBM_TDB)	OR	OFF	OFF	2020/03/31 02:29 PM
L314	2	((predictive near2 planning) same (real near2 time) with triage with analysis)	(US-PGPUB; USPAT; USOCR; FPRS; EPO; JPO; DERWENT; IBM_TDB)	OR	OFF	OFF	2020/03/31 02:29 PM
L315	25	((real near2 time) with triage with analysis)	(US-PGPUB; USPAT; USOCR; FPRS; EPO; JPO; DERWENT; IBM_TDB)	OR	OFF	OFF	2020/03/31 02:29 PM
L316	0	L315 and (predicitve near2 planning)	(US-PGPUB; USPAT; USOCR; FPRS; EPO; JPO; DERWENT; IBM_TDB)	OR	OFF	OFF	2020/03/31 02:29 PM
L317	2	L315 and (cyber near3 attack$5)	(US-PGPUB; USPAT; USOCR; FPRS; EPO; JPO; DERWENT; IBM_TDB)	OR	OFF	OFF	2020/03/31 02:29 PM
L318	2	L315 and (cybersecurity)	(US-PGPUB; USPAT; USOCR; FPRS; EPO; JPO; DERWENT; IBM_TDB)	OR	OFF	OFF	2020/03/31 02:29 PM
L319	2	L315 and (cyber$1security)	(US-PGPUB; USPAT; USOCR; FPRS; EPO; JPO; DERWENT; IBM_TDB)	OR	OFF	OFF	2020/03/31 02:29 PM
L320	0	(predicitve near2 planning)	(US-PGPUB; USPAT; USOCR; FPRS; EPO; JPO; DERWENT; IBM_TDB)	OR	OFF	OFF	2020/03/31 02:29 PM
L321	748	(predictive near2 planning)	(US-PGPUB; USPAT; USOCR; FPRS; EPO; JPO; DERWENT; IBM_TDB)	OR	OFF	OFF	2020/03/31 02:29 PM
L322	8	L321 and (cyber$1security)	(US-PGPUB; USPAT; USOCR; FPRS; EPO; JPO; DERWENT; IBM_TDB)	OR	OFF	OFF	2020/03/31 02:29 PM
L323	7	L322 AND ((G06Q30/0202 OR G06Q40/04 OR G06Q10/0637 OR G06Q10/067 OR G06Q30/0201 OR G06Q30/0205 OR G06Q40/06 OR G06Q40/08 OR G06N5/04 OR G06N7/005 OR G06N99/005 OR H04L63/1425 OR	(US-PGPUB; USPAT; USOCR; FPRS; EPO; JPO; DERWENT; IBM_TDB)	OR	OFF	OFF	2020/03/31 02:29 PM

		H04L63/1441).CPC.)					
L324	8604	726/2.ccls.	(US-PGPUB; USPAT; USOCR; FPRS; EPO; JPO; DERWENT; IBM_TDB)	OR	OFF	OFF	2020/03/31 02:29 PM
L325	3036	726/21.ccls.	(US-PGPUB; USPAT; USOCR; FPRS; EPO; JPO; DERWENT; IBM_TDB)	OR	OFF	OFF	2020/03/31 02:29 PM
L326	384	726/36.ccls.	(US-PGPUB; USPAT; USOCR; FPRS; EPO; JPO; DERWENT; IBM_TDB)	OR	OFF	OFF	2020/03/31 02:29 PM
L327	5181	713/150.ccls.	(US-PGPUB; USPAT; USOCR; FPRS; EPO; JPO; DERWENT; IBM_TDB)	OR	OFF	OFF	2020/03/31 02:29 PM
L328	973	713/163.ccls.	(US-PGPUB; USPAT; USOCR; FPRS; EPO; JPO; DERWENT; IBM_TDB)	OR	OFF	OFF	2020/03/31 02:29 PM
L329	1850	713/181.ccls.	(US-PGPUB; USPAT; USOCR; FPRS; EPO; JPO; DERWENT; IBM_TDB)	OR	OFF	OFF	2020/03/31 02:29 PM
L330	3222	380/255.ccls.	(US-PGPUB; USPAT; USOCR; FPRS; EPO; JPO; DERWENT; IBM_TDB)	OR	OFF	OFF	2020/03/31 02:29 PM
L331	361	380/264.ccls.	(US-PGPUB; USPAT; USOCR; FPRS; EPO; JPO; DERWENT; IBM_TDB)	OR	OFF	OFF	2020/03/31 02:29 PM
L332	137	380/276.ccls.	(US-PGPUB; USPAT; USOCR; FPRS; EPO; JPO; DERWENT; IBM_TDB)	OR	OFF	OFF	2020/03/31 02:29 PM
L333	0	L322 and L324	(US-PGPUB; USPAT; USOCR; FPRS; EPO; JPO; DERWENT; IBM_TDB)	OR	OFF	OFF	2020/03/31 02:29 PM
L334	0	L322 and L325	(US-PGPUB; USPAT; USOCR; FPRS; EPO; JPO; DERWENT; IBM_TDB)	OR	OFF	OFF	2020/03/31 02:29 PM
L335	0	L322 and L326	(US-PGPUB; USPAT; USOCR; FPRS; EPO; JPO; DERWENT; IBM_TDB)	OR	OFF	OFF	2020/03/31 02:29 PM
L336	0	L322 and L327	(US-PGPUB; USPAT; USOCR; FPRS; EPO; JPO; DERWENT; IBM_TDB)	OR	OFF	OFF	2020/03/31 02:29 PM

L337	0	L322 and L328	(US-PGPUB; USPAT; USOCR; FPRS; EPO; JPO; DERWENT; IBM_TDB)	OR	OFF	OFF	2020/03/31 02:29 PM
L338	0	L322 and L329	(US-PGPUB; USPAT; USOCR; FPRS; EPO; JPO; DERWENT; IBM_TDB)	OR	OFF	OFF	2020/03/31 02:29 PM
L339	0	L322 and L330	(US-PGPUB; USPAT; USOCR; FPRS; EPO; JPO; DERWENT; IBM_TDB)	OR	OFF	OFF	2020/03/31 02:29 PM
L340	0	L322 and L331	(US-PGPUB; USPAT; USOCR; FPRS; EPO; JPO; DERWENT; IBM_TDB)	OR	OFF	OFF	2020/03/31 02:29 PM
L341	0	L322 and L332	(US-PGPUB; USPAT; USOCR; FPRS; EPO; JPO; DERWENT; IBM_TDB)	OR	OFF	OFF	2020/03/31 02:29 PM
L342	4	("20050000165"|"20140359552"|"20160006629"|"7171515").PN.	(US-PGPUB; USPAT)	OR	OFF	OFF	2020/03/31 02:29 PM
L343	44	"15237625"	(US-PGPUB; USPAT; USOCR; FPRS; EPO; JPO; DERWENT; IBM_TDB)	OR	OFF	OFF	2020/03/31 02:29 PM
L344	14367	726/23	(US-PGPUB; USPAT; USOCR; FPRS; EPO; JPO; DERWENT; IBM_TDB)	OR	OFF	OFF	2020/03/31 02:29 PM
L345	9800	726/23.ccls.	(US-PGPUB; USPAT; USOCR; FPRS; EPO; JPO; DERWENT; IBM_TDB)	OR	OFF	OFF	2020/03/31 02:29 PM
L346	44	"15237625"	(US-PGPUB; USPAT; USOCR; FPRS; EPO; JPO; DERWENT; IBM_TDB)	OR	OFF	OFF	2020/03/31 02:30 PM
L347	125	(jason near2 crabtree).inv.	(US-PGPUB; USPAT; USOCR; FPRS; EPO; JPO; DERWENT; IBM_TDB)	OR	OFF	OFF	2020/03/31 02:30 PM
L348	4	(fractal near2 industries).as.	(US-PGPUB; USPAT; USOCR; FPRS; EPO; JPO; DERWENT; IBM_TDB)	OR	OFF	OFF	2020/03/31 02:30 PM
L349	68	"14925974"	(US-PGPUB; USPAT; USOCR; FPRS; EPO; JPO; DERWENT; IBM_TDB)	OR	OFF	OFF	2020/03/31 02:30 PM
L350	0	("14925974").PN.	(US-PGPUB; USPAT; USOCR; FPRS; EPO;	OR	OFF	OFF	2020/03/31 02:30 PM

			JPO; DERWENT; IBM_TDB)				
L351	0	("15237625").PN.	(US-PGPUB; USPAT; USOCR; FPRS; EPO; JPO; DERWENT; IBM_TDB)	OR	OFF	OFF	2020/03/31 02:30 PM
L352	27	L343 and (time series).clm.	(US-PGPUB; USPAT; USOCR; FPRS; EPO; JPO; DERWENT; IBM_TDB)	OR	OFF	OFF	2020/03/31 02:30 PM
L353	2	((predictive near2 planning) same (real near2 time near2 triage near2 analysis))	(US-PGPUB; USPAT; USOCR; FPRS; EPO; JPO; DERWENT; IBM_TDB)	OR	OFF	OFF	2020/03/31 02:30 PM
L354	4322122	((predictive near2 planning) same (real near2 time) with triage analysis)	(US-PGPUB; USPAT; USOCR; FPRS; EPO; JPO; DERWENT; IBM_TDB)	OR	OFF	OFF	2020/03/31 02:30 PM
L355	2	((predictive near2 planning) same (real near2 time) with triage with analysis)	(US-PGPUB; USPAT; USOCR; FPRS; EPO; JPO; DERWENT; IBM_TDB)	OR	OFF	OFF	2020/03/31 02:30 PM
L356	25	((real near2 time) with triage with analysis)	(US-PGPUB; USPAT; USOCR; FPRS; EPO; JPO; DERWENT; IBM_TDB)	OR	OFF	OFF	2020/03/31 02:30 PM
L357	0	L356 and (predicitve near2 planning)	(US-PGPUB; USPAT; USOCR; FPRS; EPO; JPO; DERWENT; IBM_TDB)	OR	OFF	OFF	2020/03/31 02:30 PM
L358	2	L356 and (cyber near3 attack$5)	(US-PGPUB; USPAT; USOCR; FPRS; EPO; JPO; DERWENT; IBM_TDB)	OR	OFF	OFF	2020/03/31 02:30 PM
L359	2	L356 and (cybersecurity)	(US-PGPUB; USPAT; USOCR; FPRS; EPO; JPO; DERWENT; IBM_TDB)	OR	OFF	OFF	2020/03/31 02:30 PM
L360	2	L356 and (cyber$1security)	(US-PGPUB; USPAT; USOCR; FPRS; EPO; JPO; DERWENT; IBM_TDB)	OR	OFF	OFF	2020/03/31 02:30 PM
L361	0	(predicitve near2 planning)	(US-PGPUB; USPAT; USOCR; FPRS; EPO; JPO; DERWENT; IBM_TDB)	OR	OFF	OFF	2020/03/31 02:30 PM
L362	748	(predictive near2 planning)	(US-PGPUB; USPAT; USOCR; FPRS; EPO; JPO; DERWENT; IBM_TDB)	OR	OFF	OFF	2020/03/31 02:30 PM
L363	8	L362 and (cyber$1security)	(US-PGPUB; USPAT; USOCR; FPRS; EPO; JPO; DERWENT;	OR	OFF	OFF	2020/03/31 02:30 PM

			IBM_TDB)				
L364	7	L363 AND ((G06Q30/0202 OR G06Q40/04 OR G06Q10/0637 OR G06Q10/067 OR G06Q30/0201 OR G06Q30/0205 OR G06Q40/06 OR G06Q40/08 OR G06N5/04 OR G06N7/005 OR G06N99/005 OR H04L63/1425 OR H04L63/1441).CPC.)	(US-PGPUB; USPAT; USOCR; FPRS; EPO; JPO; DERWENT; IBM_TDB)	OR	OFF	OFF	2020/03/31 02:30 PM
L365	8604	726/2.ccls.	(US-PGPUB; USPAT; USOCR; FPRS; EPO; JPO; DERWENT; IBM_TDB)	OR	OFF	OFF	2020/03/31 02:30 PM
L366	3036	726/21.ccls.	(US-PGPUB; USPAT; USOCR; FPRS; EPO; JPO; DERWENT; IBM_TDB)	OR	OFF	OFF	2020/03/31 02:30 PM
L367	384	726/36.ccls.	(US-PGPUB; USPAT; USOCR; FPRS; EPO; JPO; DERWENT; IBM_TDB)	OR	OFF	OFF	2020/03/31 02:30 PM
L368	5181	713/150.ccls.	(US-PGPUB; USPAT; USOCR; FPRS; EPO; JPO; DERWENT; IBM_TDB)	OR	OFF	OFF	2020/03/31 02:30 PM
L369	973	713/163.ccls.	(US-PGPUB; USPAT; USOCR; FPRS; EPO; JPO; DERWENT; IBM_TDB)	OR	OFF	OFF	2020/03/31 02:30 PM
L370	1850	713/181.ccls.	(US-PGPUB; USPAT; USOCR; FPRS; EPO; JPO; DERWENT; IBM_TDB)	OR	OFF	OFF	2020/03/31 02:30 PM
L371	3222	380/255.ccls.	(US-PGPUB; USPAT; USOCR; FPRS; EPO; JPO; DERWENT; IBM_TDB)	OR	OFF	OFF	2020/03/31 02:30 PM
L372	361	380/264.ccls.	(US-PGPUB; USPAT; USOCR; FPRS; EPO; JPO; DERWENT; IBM_TDB)	OR	OFF	OFF	2020/03/31 02:30 PM
L373	137	380/276.ccls.	(US-PGPUB; USPAT; USOCR; FPRS; EPO; JPO; DERWENT; IBM_TDB)	OR	OFF	OFF	2020/03/31 02:30 PM
L374	0	L363 and L365	(US-PGPUB; USPAT; USOCR; FPRS; EPO; JPO; DERWENT;	OR	OFF	OFF	2020/03/31 02:30 PM

			IBM_TDB)				
L375	0	L363 and L366	(US-PGPUB; USPAT; USOCR; FPRS; EPO; JPO; DERWENT; IBM_TDB)	OR	OFF	OFF	2020/03/31 02:30 PM
L376	0	L363 and L367	(US-PGPUB; USPAT; USOCR; FPRS; EPO; JPO; DERWENT; IBM_TDB)	OR	OFF	OFF	2020/03/31 02:30 PM
L377	0	L363 and L368	(US-PGPUB; USPAT; USOCR; FPRS; EPO; JPO; DERWENT; IBM_TDB)	OR	OFF	OFF	2020/03/31 02:30 PM
L378	0	L363 and L369	(US-PGPUB; USPAT; USOCR; FPRS; EPO; JPO; DERWENT; IBM_TDB)	OR	OFF	OFF	2020/03/31 02:30 PM
L379	0	L363 and L370	(US-PGPUB; USPAT; USOCR; FPRS; EPO; JPO; DERWENT; IBM_TDB)	OR	OFF	OFF	2020/03/31 02:30 PM
L380	0	L363 and L371	(US-PGPUB; USPAT; USOCR; FPRS; EPO; JPO; DERWENT; IBM_TDB)	OR	OFF	OFF	2020/03/31 02:30 PM
L381	0	L363 and L372	(US-PGPUB; USPAT; USOCR; FPRS; EPO; JPO; DERWENT; IBM_TDB)	OR	OFF	OFF	2020/03/31 02:30 PM
L382	0	L363 and L373	(US-PGPUB; USPAT; USOCR; FPRS; EPO; JPO; DERWENT; IBM_TDB)	OR	OFF	OFF	2020/03/31 02:30 PM
L383	4	("20050000165"|"20140359552"|"20160006629"|"7171515").PN.	(US-PGPUB; USPAT)	OR	OFF	OFF	2020/03/31 02:30 PM
L384	30	L306 and (time near2 series).clm.	(US-PGPUB; USPAT; USOCR; FPRS; EPO; JPO; DERWENT; IBM_TDB)	OR	OFF	OFF	2020/03/31 02:30 PM
L385	13	L306 and ((time near2 series) with multi$dimensional).clm.	(US-PGPUB; USPAT; USOCR; FPRS; EPO; JPO; DERWENT; IBM_TDB)	OR	OFF	OFF	2020/03/31 02:30 PM
L386	2	("20160275123"|"6256544").PN.	(US-PGPUB; USPAT)	OR	OFF	OFF	2020/03/31 02:30 PM
L387	1	"15790860"	(US-PGPUB; USPAT; USOCR; FPRS; EPO; JPO; DERWENT; IBM_TDB)	OR	OFF	OFF	2020/03/31 02:30 PM
L388	6	"20150020199"	(US-PGPUB; USPAT; USOCR; FPRS; EPO; JPO; DERWENT;	OR	OFF	OFF	2020/03/31 02:30 PM

			IBM_TDB)				
L389	8	"20160006629"	(US-PGPUB; USPAT; USOCR; FPRS; EPO; JPO; DERWENT; IBM_TDB)	OR	OFF	OFF	2020/03/31 02:30 PM
L390	3	"20140359552"	(US-PGPUB; USPAT; USOCR; FPRS; EPO; JPO; DERWENT; IBM_TDB)	OR	OFF	OFF	2020/03/31 02:30 PM
L391	7	(US-20160006629-$ or US-20140359552-$ or US-20050000165-$ or US-20160275123-$ or US-20150020199-$).did. or (US-7171515-$ or US-6256544-$).did.	(US-PGPUB; USPAT)	OR	OFF	OFF	2020/03/31 02:30 PM
L392	0	L391 and (network with traffice with monitor$5)	(US-PGPUB; USPAT; USOCR; FPRS; EPO; JPO; DERWENT; IBM_TDB)	OR	OFF	OFF	2020/03/31 02:30 PM
L393	1	L391 and (network with traffic with monitor$5)	(US-PGPUB; USPAT; USOCR; FPRS; EPO; JPO; DERWENT; IBM_TDB)	OR	OFF	OFF	2020/03/31 02:30 PM
L394	1	L391 and (network with traffic with (scan$5 or monitor$5))	(US-PGPUB; USPAT; USOCR; FPRS; EPO; JPO; DERWENT; IBM_TDB)	OR	OFF	OFF	2020/03/31 02:30 PM
L395	1	L391 and (network with (flow$1 or traffic) with (scan$5 or monitor$5))	(US-PGPUB; USPAT; USOCR; FPRS; EPO; JPO; DERWENT; IBM_TDB)	OR	OFF	OFF	2020/03/31 02:30 PM
L396	1	L391 and (network near3 (scan$5 or monitor$5))	(US-PGPUB; USPAT; USOCR; FPRS; EPO; JPO; DERWENT; IBM_TDB)	OR	OFF	OFF	2020/03/31 02:30 PM
L397	5	L391 and (baseline$1 or threshold$1 or limit$1)	(US-PGPUB; USPAT; USOCR; FPRS; EPO; JPO; DERWENT; IBM_TDB)	OR	OFF	OFF	2020/03/31 02:30 PM
L398	1	L391 and (score$1)	(US-PGPUB; USPAT; USOCR; FPRS; EPO; JPO; DERWENT; IBM_TDB)	OR	OFF	OFF	2020/03/31 02:30 PM
L399	6	"20130117852"	(US-PGPUB; USPAT; USOCR; FPRS; EPO; JPO; DERWENT; IBM_TDB)	OR	OFF	OFF	2020/03/31 02:30 PM
L400	3	"20070226796"	(US-PGPUB; USPAT; USOCR; FPRS; EPO; JPO; DERWENT; IBM_TDB)	OR	OFF	OFF	2020/03/31 02:30 PM
L401	10	(US-20160006629-$ or	(US-PGPUB; USPAT;	OR	OFF	OFF	2020/03/31

		US-20140359552-$ or US-20050000165-$ or US-20160275123-$ or US-20150020199-$ or US-20130117852-$ or US-20070226796-$).did. or (US-7171515-$ or US-6256544-$).did. or (US-20070226796-$).did.	DERWENT)				02:30 PM
L402	2	L401 and (score$1)	(US-PGPUB; USPAT; USOCR; FPRS; EPO; JPO; DERWENT; IBM_TDB)	OR	OFF	OFF	2020/03/31 02:30 PM
L403	288969	(network near3 (monitor$5 or scan$5))	(US-PGPUB; USPAT; USOCR; FPRS; EPO; JPO; DERWENT; IBM_TDB)	OR	OFF	OFF	2020/03/31 02:31 PM
L404	288969	(network near3 (monitor$5 or scan$5))	(US-PGPUB; USPAT; USOCR; FPRS; EPO; JPO; DERWENT; IBM_TDB)	OR	OFF	OFF	2020/03/31 02:31 PM
L405	703	L404 and (score with access$6 with (resource$1 or content or application$1 or program$1))	(US-PGPUB; USPAT; USOCR; FPRS; EPO; JPO; DERWENT; IBM_TDB)	OR	OFF	OFF	2020/03/31 02:31 PM
L406	338	L405 and @ad<"20151028"	(US-PGPUB; USPAT; USOCR; FPRS; EPO; JPO; DERWENT; IBM_TDB)	OR	OFF	OFF	2020/03/31 02:31 PM
L407	7	L406 and (score with (security or threat) with level$1 with (resource$1 or content or application$1 or program$1))	(US-PGPUB; USPAT; USOCR; FPRS; EPO; JPO; DERWENT; IBM_TDB)	OR	OFF	OFF	2020/03/31 02:31 PM
L408	0	L407 and (score$1 with connection)	(US-PGPUB; USPAT; USOCR; FPRS; EPO; JPO; DERWENT; IBM_TDB)	OR	OFF	OFF	2020/03/31 02:31 PM
L409	1	L407 and (score$1 with media)	(US-PGPUB; USPAT; USOCR; FPRS; EPO; JPO; DERWENT; IBM_TDB)	OR	OFF	OFF	2020/03/31 02:31 PM
L410	11	(US-20160006629-$ or US-20140359552-$ or US-20050000165-$ or US-20160275123-$ or US-20150020199-$ or US-20130117852-$ or US-20070226796-$ or US-20130111592-$).did. or (US-7171515-$ or US-6256544-$).did.	(US-PGPUB; USPAT; DERWENT)	OR	OFF	OFF	2020/03/31 02:31 PM

		or (US-20070226796-$).did.					
L411	0	L410 and (score$1 with (verification or authentication))	(US-PGPUB; USPAT; USOCR; FPRS; EPO; JPO; DERWENT; IBM_TDB)	OR	OFF	OFF	2020/03/31 02:31 PM
L412	0	L410 and (score$1 same (verification or authentication))	(US-PGPUB; USPAT; USOCR; FPRS; EPO; JPO; DERWENT; IBM_TDB)	OR	OFF	OFF	2020/03/31 02:31 PM
L413	2	L410 and ((verification or authentication))	(US-PGPUB; USPAT; USOCR; FPRS; EPO; JPO; DERWENT; IBM_TDB)	OR	OFF	OFF	2020/03/31 02:31 PM
L414	10	L410 and (access$4 or permission$1)	(US-PGPUB; USPAT; USOCR; FPRS; EPO; JPO; DERWENT; IBM_TDB)	OR	OFF	OFF	2020/03/31 02:31 PM
L415	1	"15790860"	(US-PGPUB; USPAT; USOCR; FPRS; EPO; JPO; DERWENT; IBM_TDB)	OR	OFF	OFF	2020/03/31 02:39 PM
L416	14367	726/23	(US-PGPUB; USPAT; USOCR; FPRS; EPO; JPO; DERWENT; IBM_TDB)	OR	OFF	OFF	2020/03/31 02:40 PM
L417	9800	726/23.ccls.	(US-PGPUB; USPAT; USOCR; FPRS; EPO; JPO; DERWENT; IBM_TDB)	OR	OFF	OFF	2020/03/31 02:40 PM
L418	44	"15237625"	(US-PGPUB; USPAT; USOCR; FPRS; EPO; JPO; DERWENT; IBM_TDB)	OR	OFF	OFF	2020/03/31 02:40 PM
L419	125	(jason near2 crabtree).inv.	(US-PGPUB; USPAT; USOCR; FPRS; EPO; JPO; DERWENT; IBM_TDB)	OR	OFF	OFF	2020/03/31 02:40 PM
L420	4	(fractal near2 industries).as.	(US-PGPUB; USPAT; USOCR; FPRS; EPO; JPO; DERWENT; IBM_TDB)	OR	OFF	OFF	2020/03/31 02:40 PM
L421	68	"14925974"	(US-PGPUB; USPAT; USOCR; FPRS; EPO; JPO; DERWENT; IBM_TDB)	OR	OFF	OFF	2020/03/31 02:40 PM
L422	0	("14925974").PN.	(US-PGPUB; USPAT; USOCR; FPRS; EPO; JPO; DERWENT; IBM_TDB)	OR	OFF	OFF	2020/03/31 02:40 PM
L423	0	("15237625").PN.	(US-PGPUB; USPAT; USOCR; FPRS; EPO; JPO; DERWENT;	OR	OFF	OFF	2020/03/31 02:40 PM

			IBM_TDB)				
L424	2	((predictive near2 planning) same (real near2 time near2 triage near2 analysis))	(US-PGPUB; USPAT; USOCR; FPRS; EPO; JPO; DERWENT; IBM_TDB)	OR	OFF	OFF	2020/03/31 02:40 PM
L425	4322122	((predictive near2 planning) same (real near2 time) with triage analysis)	(US-PGPUB; USPAT; USOCR; FPRS; EPO; JPO; DERWENT; IBM_TDB)	OR	OFF	OFF	2020/03/31 02:40 PM
L426	2	((predictive near2 planning) same (real near2 time) with triage with analysis)	(US-PGPUB; USPAT; USOCR; FPRS; EPO; JPO; DERWENT; IBM_TDB)	OR	OFF	OFF	2020/03/31 02:40 PM
L427	25	((real near2 time) with triage with analysis)	(US-PGPUB; USPAT; USOCR; FPRS; EPO; JPO; DERWENT; IBM_TDB)	OR	OFF	OFF	2020/03/31 02:40 PM
L428	0	L233 and (predicitve near2 planning)	(US-PGPUB; USPAT; USOCR; FPRS; EPO; JPO; DERWENT; IBM_TDB)	OR	OFF	OFF	2020/03/31 02:40 PM
L429	2	L233 and (cyber near3 attack$5)	(US-PGPUB; USPAT; USOCR; FPRS; EPO; JPO; DERWENT; IBM_TDB)	OR	OFF	OFF	2020/03/31 02:40 PM
L430	2	L233 and (cybersecurity)	(US-PGPUB; USPAT; USOCR; FPRS; EPO; JPO; DERWENT; IBM_TDB)	OR	OFF	OFF	2020/03/31 02:40 PM
L431	0	(predicitve near2 planning)	(US-PGPUB; USPAT; USOCR; FPRS; EPO; JPO; DERWENT; IBM_TDB)	OR	OFF	OFF	2020/03/31 02:40 PM
L432	748	(predictive near2 planning)	(US-PGPUB; USPAT; USOCR; FPRS; EPO; JPO; DERWENT; IBM_TDB)	OR	OFF	OFF	2020/03/31 02:40 PM
L433	8	L239 and (cyber$1security)	(US-PGPUB; USPAT; USOCR; FPRS; EPO; JPO; DERWENT; IBM_TDB)	OR	OFF	OFF	2020/03/31 02:40 PM
L434	7	L240 AND ((G06Q30/0202 OR G06Q40/04 OR G06Q10/0637 OR G06Q10/067 OR G06Q30/0201 OR G06Q30/0205 OR G06Q40/06 OR G06Q40/08 OR G06N5/04 OR G06N7/005 OR G06N99/005 OR H04L63/1425 OR	(US-PGPUB; USPAT; USOCR; FPRS; EPO; JPO; DERWENT; IBM_TDB)	OR	OFF	OFF	2020/03/31 02:40 PM

		H04L63/1441).CPC.)					
L435	8604	726/2.ccls.	(US-PGPUB; USPAT; USOCR; FPRS; EPO; JPO; DERWENT; IBM_TDB)	OR	OFF	OFF	2020/03/31 02:40 PM
L436	3036	726/21.ccls.	(US-PGPUB; USPAT; USOCR; FPRS; EPO; JPO; DERWENT; IBM_TDB)	OR	OFF	OFF	2020/03/31 02:40 PM
L437	384	726/36.ccls.	(US-PGPUB; USPAT; USOCR; FPRS; EPO; JPO; DERWENT; IBM_TDB)	OR	OFF	OFF	2020/03/31 02:40 PM
L438	5181	713/150.ccls.	(US-PGPUB; USPAT; USOCR; FPRS; EPO; JPO; DERWENT; IBM_TDB)	OR	OFF	OFF	2020/03/31 02:40 PM
L439	973	713/163.ccls.	(US-PGPUB; USPAT; USOCR; FPRS; EPO; JPO; DERWENT; IBM_TDB)	OR	OFF	OFF	2020/03/31 02:40 PM
L440	1850	713/181.ccls.	(US-PGPUB; USPAT; USOCR; FPRS; EPO; JPO; DERWENT; IBM_TDB)	OR	OFF	OFF	2020/03/31 02:40 PM
L441	3222	380/255.ccls.	(US-PGPUB; USPAT; USOCR; FPRS; EPO; JPO; DERWENT; IBM_TDB)	OR	OFF	OFF	2020/03/31 02:40 PM
L442	361	380/264.ccls.	(US-PGPUB; USPAT; USOCR; FPRS; EPO; JPO; DERWENT; IBM_TDB)	OR	OFF	OFF	2020/03/31 02:40 PM
L443	137	380/276.ccls.	(US-PGPUB; USPAT; USOCR; FPRS; EPO; JPO; DERWENT; IBM_TDB)	OR	OFF	OFF	2020/03/31 02:40 PM
L444	0	L240 and L242	(US-PGPUB; USPAT; USOCR; FPRS; EPO; JPO; DERWENT; IBM_TDB)	OR	OFF	OFF	2020/03/31 02:40 PM
L445	0	L240 and L243	(US-PGPUB; USPAT; USOCR; FPRS; EPO; JPO; DERWENT; IBM_TDB)	OR	OFF	OFF	2020/03/31 02:40 PM
L446	0	L240 and L244	(US-PGPUB; USPAT; USOCR; FPRS; EPO; JPO; DERWENT; IBM_TDB)	OR	OFF	OFF	2020/03/31 02:40 PM
L447	0	L240 and L245	(US-PGPUB; USPAT; USOCR; FPRS; EPO; JPO; DERWENT; IBM_TDB)	OR	OFF	OFF	2020/03/31 02:40 PM

L448	0	L240 and L246	(US-PGPUB; USPAT; USOCR; FPRS; EPO; JPO; DERWENT; IBM_TDB)	OR	OFF	OFF	2020/03/31 02:40 PM
L449	0	L240 and L247	(US-PGPUB; USPAT; USOCR; FPRS; EPO; JPO; DERWENT; IBM_TDB)	OR	OFF	OFF	2020/03/31 02:40 PM
L450	0	L240 and L248	(US-PGPUB; USPAT; USOCR; FPRS; EPO; JPO; DERWENT; IBM_TDB)	OR	OFF	OFF	2020/03/31 02:40 PM
L451	0	L240 and L249	(US-PGPUB; USPAT; USOCR; FPRS; EPO; JPO; DERWENT; IBM_TDB)	OR	OFF	OFF	2020/03/31 02:40 PM
L452	0	L240 and L250	(US-PGPUB; USPAT; USOCR; FPRS; EPO; JPO; DERWENT; IBM_TDB)	OR	OFF	OFF	2020/03/31 02:40 PM
L453	14367	726/23	(US-PGPUB; USPAT; USOCR; FPRS; EPO; JPO; DERWENT; IBM_TDB)	OR	OFF	OFF	2020/03/31 02:40 PM
L454	9800	726/23.ccls.	(US-PGPUB; USPAT; USOCR; FPRS; EPO; JPO; DERWENT; IBM_TDB)	OR	OFF	OFF	2020/03/31 02:40 PM
L455	44	"15237625"	(US-PGPUB; USPAT; USOCR; FPRS; EPO; JPO; DERWENT; IBM_TDB)	OR	OFF	OFF	2020/03/31 02:40 PM
L456	125	(jason near2 crabtree).inv.	(US-PGPUB; USPAT; USOCR; FPRS; EPO; JPO; DERWENT; IBM_TDB)	OR	OFF	OFF	2020/03/31 02:40 PM
L457	4	(fractal near2 industries).as.	(US-PGPUB; USPAT; USOCR; FPRS; EPO; JPO; DERWENT; IBM_TDB)	OR	OFF	OFF	2020/03/31 02:40 PM
L458	68	"14925974"	(US-PGPUB; USPAT; USOCR; FPRS; EPO; JPO; DERWENT; IBM_TDB)	OR	OFF	OFF	2020/03/31 02:40 PM
L459	0	("14925974").PN.	(US-PGPUB; USPAT; USOCR; FPRS; EPO; JPO; DERWENT; IBM_TDB)	OR	OFF	OFF	2020/03/31 02:40 PM
L460	0	("15237625").PN.	(US-PGPUB; USPAT; USOCR; FPRS; EPO; JPO; DERWENT; IBM_TDB)	OR	OFF	OFF	2020/03/31 02:40 PM
L461	2	((predictive near2	(US-PGPUB; USPAT;	OR	OFF	OFF	2020/03/31

		planning) same (real near2 time near2 triage near2 analysis))	USOCR; FPRS; EPO; JPO; DERWENT; IBM_TDB)				02:40 PM
L462	4322122	((predictive near2 planning) same (real near2 time) with triage analysis)	(US-PGPUB; USPAT; USOCR; FPRS; EPO; JPO; DERWENT; IBM_TDB)	OR	OFF	OFF	2020/03/31 02:40 PM
L463	2	((predictive near2 planning) same (real near2 time) with triage with analysis)	(US-PGPUB; USPAT; USOCR; FPRS; EPO; JPO; DERWENT; IBM_TDB)	OR	OFF	OFF	2020/03/31 02:40 PM
L464	25	((real near2 time) with triage with analysis)	(US-PGPUB; USPAT; USOCR; FPRS; EPO; JPO; DERWENT; IBM_TDB)	OR	OFF	OFF	2020/03/31 02:40 PM
L465	0	L274 and (predicitve near2 planning)	(US-PGPUB; USPAT; USOCR; FPRS; EPO; JPO; DERWENT; IBM_TDB)	OR	OFF	OFF	2020/03/31 02:40 PM
L466	2	L274 and (cyber near3 attack$5)	(US-PGPUB; USPAT; USOCR; FPRS; EPO; JPO; DERWENT; IBM_TDB)	OR	OFF	OFF	2020/03/31 02:40 PM
L467	2	L274 and (cybersecurity)	(US-PGPUB; USPAT; USOCR; FPRS; EPO; JPO; DERWENT; IBM_TDB)	OR	OFF	OFF	2020/03/31 02:40 PM
L468	0	(predicitve near2 planning)	(US-PGPUB; USPAT; USOCR; FPRS; EPO; JPO; DERWENT; IBM_TDB)	OR	OFF	OFF	2020/03/31 02:40 PM
L469	748	(predictive near2 planning)	(US-PGPUB; USPAT; USOCR; FPRS; EPO; JPO; DERWENT; IBM_TDB)	OR	OFF	OFF	2020/03/31 02:40 PM
L470	8	L280 and (cyber$1security)	(US-PGPUB; USPAT; USOCR; FPRS; EPO; JPO; DERWENT; IBM_TDB)	OR	OFF	OFF	2020/03/31 02:40 PM
L471	7	L281 AND ((G06Q30/0202 OR G06Q40/04 OR G06Q10/0637 OR G06Q10/067 OR G06Q30/0201 OR G06Q30/0205 OR G06Q40/06 OR G06Q40/08 OR G06N5/04 OR G06N7/005 OR G06N99/005 OR H04L63/1425 OR H04L63/1441).CPC.)	(US-PGPUB; USPAT; USOCR; FPRS; EPO; JPO; DERWENT; IBM_TDB)	OR	OFF	OFF	2020/03/31 02:40 PM
L472	8604	726/2.ccls.	(US-PGPUB; USPAT;	OR	OFF	OFF	2020/03/31

			USOCR; FPRS; EPO; JPO; DERWENT; IBM_TDB)				02:40 PM
L473	3036	726/21.ccls.	(US-PGPUB; USPAT; USOCR; FPRS; EPO; JPO; DERWENT; IBM_TDB)	OR	OFF	OFF	2020/03/31 02:40 PM
L474	384	726/36.ccls.	(US-PGPUB; USPAT; USOCR; FPRS; EPO; JPO; DERWENT; IBM_TDB)	OR	OFF	OFF	2020/03/31 02:40 PM
L475	5181	713/150.ccls.	(US-PGPUB; USPAT; USOCR; FPRS; EPO; JPO; DERWENT; IBM_TDB)	OR	OFF	OFF	2020/03/31 02:40 PM
L476	973	713/163.ccls.	(US-PGPUB; USPAT; USOCR; FPRS; EPO; JPO; DERWENT; IBM_TDB)	OR	OFF	OFF	2020/03/31 02:40 PM
L477	1850	713/181.ccls.	(US-PGPUB; USPAT; USOCR; FPRS; EPO; JPO; DERWENT; IBM_TDB)	OR	OFF	OFF	2020/03/31 02:40 PM
L478	3222	380/255.ccls.	(US-PGPUB; USPAT; USOCR; FPRS; EPO; JPO; DERWENT; IBM_TDB)	OR	OFF	OFF	2020/03/31 02:40 PM
L479	361	380/264.ccls.	(US-PGPUB; USPAT; USOCR; FPRS; EPO; JPO; DERWENT; IBM_TDB)	OR	OFF	OFF	2020/03/31 02:40 PM
L480	137	380/276.ccls.	(US-PGPUB; USPAT; USOCR; FPRS; EPO; JPO; DERWENT; IBM_TDB)	OR	OFF	OFF	2020/03/31 02:40 PM
L481	0	L281 and L283	(US-PGPUB; USPAT; USOCR; FPRS; EPO; JPO; DERWENT; IBM_TDB)	OR	OFF	OFF	2020/03/31 02:40 PM
L482	0	L281 and L284	(US-PGPUB; USPAT; USOCR; FPRS; EPO; JPO; DERWENT; IBM_TDB)	OR	OFF	OFF	2020/03/31 02:40 PM
L483	0	L281 and L285	(US-PGPUB; USPAT; USOCR; FPRS; EPO; JPO; DERWENT; IBM_TDB)	OR	OFF	OFF	2020/03/31 02:40 PM
L484	0	L281 and L286	(US-PGPUB; USPAT; USOCR; FPRS; EPO; JPO; DERWENT; IBM_TDB)	OR	OFF	OFF	2020/03/31 02:40 PM
L485	0	L281 and L287	(US-PGPUB; USPAT; USOCR; FPRS; EPO;	OR	OFF	OFF	2020/03/31 02:40 PM

			JPO; DERWENT; IBM_TDB)				
L486	0	L281 and L288	(US-PGPUB; USPAT; USOCR; FPRS; EPO; JPO; DERWENT; IBM_TDB)	OR	OFF	OFF	2020/03/31 02:40 PM
L487	0	L281 and L289	(US-PGPUB; USPAT; USOCR; FPRS; EPO; JPO; DERWENT; IBM_TDB)	OR	OFF	OFF	2020/03/31 02:40 PM
L488	0	L281 and L290	(US-PGPUB; USPAT; USOCR; FPRS; EPO; JPO; DERWENT; IBM_TDB)	OR	OFF	OFF	2020/03/31 02:40 PM
L489	0	L281 and L291	(US-PGPUB; USPAT; USOCR; FPRS; EPO; JPO; DERWENT; IBM_TDB)	OR	OFF	OFF	2020/03/31 02:40 PM
L490	14367	726/23	(US-PGPUB; USPAT; USOCR; FPRS; EPO; JPO; DERWENT; IBM_TDB)	OR	OFF	OFF	2020/03/31 02:40 PM
L491	9800	726/23.ccls.	(US-PGPUB; USPAT; USOCR; FPRS; EPO; JPO; DERWENT; IBM_TDB)	OR	OFF	OFF	2020/03/31 02:40 PM
L492	44	"15237625"	(US-PGPUB; USPAT; USOCR; FPRS; EPO; JPO; DERWENT; IBM_TDB)	OR	OFF	OFF	2020/03/31 02:40 PM
L493	125	(jason near2 crabtree).inv.	(US-PGPUB; USPAT; USOCR; FPRS; EPO; JPO; DERWENT; IBM_TDB)	OR	OFF	OFF	2020/03/31 02:40 PM
L494	4	(fractal near2 industries).as.	(US-PGPUB; USPAT; USOCR; FPRS; EPO; JPO; DERWENT; IBM_TDB)	OR	OFF	OFF	2020/03/31 02:40 PM
L495	68	"14925974"	(US-PGPUB; USPAT; USOCR; FPRS; EPO; JPO; DERWENT; IBM_TDB)	OR	OFF	OFF	2020/03/31 02:40 PM
L496	0	("14925974").PN.	(US-PGPUB; USPAT; USOCR; FPRS; EPO; JPO; DERWENT; IBM_TDB)	OR	OFF	OFF	2020/03/31 02:40 PM
L497	0	("15237625").PN.	(US-PGPUB; USPAT; USOCR; FPRS; EPO; JPO; DERWENT; IBM_TDB)	OR	OFF	OFF	2020/03/31 02:40 PM
L498	2	((predictive near2 planning) same (real near2 time near2 triage	(US-PGPUB; USPAT; USOCR; FPRS; EPO; JPO; DERWENT;	OR	OFF	OFF	2020/03/31 02:40 PM

		near2 analysis))	IBM_TDB)				
L499	0	"18885474"	(US-PGPUB; USPAT; EPO)	OR	ON	ON	2024/11/01 05:52 PM
L500	412	(jason near2 crabtree).inv.	(US-PGPUB; USPAT; EPO)	OR	ON	ON	2024/11/01 06:04 PM
L501	45	L500 AND (receive near2 request$1).clm.	(US-PGPUB; USPAT; EPO)	OR	ON	ON	2024/11/01 06:04 PM
L502	42	L501 AND (time near2 series)	(US-PGPUB; USPAT; EPO)	OR	ON	ON	2024/11/01 06:05 PM
L503	17	L501 AND (time near2 series).clm.	(US-PGPUB; USPAT; EPO)	OR	ON	ON	2024/11/01 06:05 PM
L504	0	L500 AND (additional near2 verification).clm.	(US-PGPUB; USPAT; EPO)	OR	ON	ON	2024/11/01 06:10 PM
L505	19	L500 AND (historical).clm.	(US-PGPUB; USPAT; EPO)	OR	ON	ON	2024/11/01 06:10 PM
L506	4	L505 AND (authenticat$6).clm.	(US-PGPUB; USPAT; EPO)	OR	ON	ON	2024/11/02 04:00 PM
L507	2	"17106479"	(US-PGPUB; USPAT; EPO)	OR	ON	ON	2024/11/02 04:04 PM
L508	44	("10044726" OR "10191768" OR "10210246" OR "10216485" OR "10270748" OR "10333992" OR "10643144" OR "10846391" OR "20050165822" OR "20110307467" OR "20140324521" OR "20150319156" OR "20160006629" OR "20160012235" OR "20170090893" OR "20180082304" OR "6477572" OR "6857073" OR "7139747" OR "7227948" OR "7310632" OR "7322044" OR "7530105" OR "7546333" OR "7685296" OR "7818224" OR "7818417" OR "7925561" OR "8069190" OR "8346753" OR "8457996" OR "8751867" OR "8832840" OR "8949960" OR "9069976" OR	(US-PGPUB; USPAT)	OR	ON	ON	2024/11/02 06:34 PM

		"9110706" OR "9152727" OR "9256735" OR "9400962" OR "9466041" OR "9558220" OR "9560065" OR "9652538" OR "9774522").pn.					
L509	22	L281 AND ((G06Q30/0202 OR G06Q40/04 OR G06Q10/0637 OR G06Q10/067 OR G06Q30/0201 OR G06Q30/0205 OR G06Q40/06 OR G06Q40/08 OR G06N5/04 OR G06N7/005 OR G06N99/005 OR H04L63/1425 OR H04L63/1441 OR H04L63/0861).CPC.)	(US-PGPUB; USPAT; USOCR; FPRS; EPO; JPO; DERWENT; IBM_TDB)	OR	OFF	OFF	2024/11/02 06:39 PM
L510	44	("10044726" OR "10191768" OR "10210246" OR "10216485" OR "10270748" OR "10333992" OR "10643144" OR "10846391" OR "20050165822" OR "20110307467" OR "20140324521" OR "20150319156" OR "20160006629" OR "20160012235" OR "20170090893" OR "20180082304" OR "6477572" OR "6857073" OR "7139747" OR "7227948" OR "7310632" OR "7322044" OR "7530105" OR "7546333" OR "7685296" OR "7818224" OR "7818417" OR "7925561" OR "8069190" OR "8346753" OR "8457996" OR "8751867" OR "8832840" OR	(US-PGPUB; USPAT)	OR	ON	ON	2024/11/02 06:59 PM

		"8949960" OR "9069976" OR "9110706" OR "9152727" OR "9256735" OR "9400962" OR "9466041" OR "9558220" OR "9560065" OR "9652538" OR "9774522").pn.					
L511	329	"15237625"	(US-PGPUB; USPAT; USOCR; FPRS; EPO; JPO; DERWENT; IBM_TDB)	OR	OFF	OFF	2024/11/30 03:34 PM
L512	28028	726/23	(US-PGPUB; USPAT; USOCR; FPRS; EPO; JPO; DERWENT; IBM_TDB)	OR	OFF	OFF	2024/11/30 03:34 PM
L513	11197	726/23.ccls.	(US-PGPUB; USPAT; USOCR; FPRS; EPO; JPO; DERWENT; IBM_TDB)	OR	OFF	OFF	2024/11/30 03:34 PM
L514	329	"15237625"	(US-PGPUB; USPAT; USOCR; FPRS; EPO; JPO; DERWENT; IBM_TDB)	OR	OFF	OFF	2024/11/30 03:34 PM
L515	525	(jason near2 crabtree).inv.	(US-PGPUB; USPAT; USOCR; FPRS; EPO; JPO; DERWENT; IBM_TDB)	OR	OFF	OFF	2024/11/30 03:34 PM
L516	4	(fractal near2 industries).as.	(US-PGPUB; USPAT; USOCR; FPRS; EPO; JPO; DERWENT; IBM_TDB)	OR	OFF	OFF	2024/11/30 03:34 PM
L517	409	"14925974"	(US-PGPUB; USPAT; USOCR; FPRS; EPO; JPO; DERWENT; IBM_TDB)	OR	OFF	OFF	2024/11/30 03:34 PM
L518	0	("14925974").PN.	(US-PGPUB; USPAT; USOCR; FPRS; EPO; JPO; DERWENT; IBM_TDB)	OR	OFF	OFF	2024/11/30 03:34 PM
L519	0	("15237625").PN.	(US-PGPUB; USPAT; USOCR; FPRS; EPO; JPO; DERWENT; IBM_TDB)	OR	OFF	OFF	2024/11/30 03:34 PM
L520	158	L1 and (time series).clm.	(US-PGPUB; USPAT; USOCR; FPRS; EPO; JPO; DERWENT; IBM_TDB)	OR	OFF	OFF	2024/11/30 03:34 PM
L521	2	((predictive near2 planning) same (real near2 time near2 triage	(US-PGPUB; USPAT; USOCR; FPRS; EPO; JPO; DERWENT;	OR	OFF	OFF	2024/11/30 03:34 PM

		near2 analysis))	IBM_TDB)				
L522	6410653	((predictive near2 planning) same (real near2 time) with triage analysis)	(US-PGPUB; USPAT; USOCR; FPRS; EPO; JPO; DERWENT; IBM_TDB)	OR	OFF	OFF	2024/11/30 03:34 PM
L523	2	((predictive near2 planning) same (real near2 time) with triage with analysis)	(US-PGPUB; USPAT; USOCR; FPRS; EPO; JPO; DERWENT; IBM_TDB)	OR	OFF	OFF	2024/11/30 03:34 PM
L524	59	((real near2 time) with triage with analysis)	(US-PGPUB; USPAT; USOCR; FPRS; EPO; JPO; DERWENT; IBM_TDB)	OR	OFF	OFF	2024/11/30 03:34 PM
L525	0	L14 and (predicitve near2 planning)	(US-PGPUB; USPAT; USOCR; FPRS; EPO; JPO; DERWENT; IBM_TDB)	OR	OFF	OFF	2024/11/30 03:34 PM
L526	2	L14 and (cyber near3 attack$5)	(US-PGPUB; USPAT; USOCR; FPRS; EPO; JPO; DERWENT; IBM_TDB)	OR	OFF	OFF	2024/11/30 03:34 PM
L527	6	L14 and (cybersecurity)	(US-PGPUB; USPAT; USOCR; FPRS; EPO; JPO; DERWENT; IBM_TDB)	OR	OFF	OFF	2024/11/30 03:34 PM
L528	6	L14 and (cyber$1security)	(US-PGPUB; USPAT; USOCR; FPRS; EPO; JPO; DERWENT; IBM_TDB)	OR	OFF	OFF	2024/11/30 03:34 PM
L529	0	(predicitve near2 planning)	(US-PGPUB; USPAT; USOCR; FPRS; EPO; JPO; DERWENT; IBM_TDB)	OR	OFF	OFF	2024/11/30 03:34 PM
L530	1293	(predictive near2 planning)	(US-PGPUB; USPAT; USOCR; FPRS; EPO; JPO; DERWENT; IBM_TDB)	OR	OFF	OFF	2024/11/30 03:34 PM
L531	24	L20 and (cyber$1security)	(US-PGPUB; USPAT; USOCR; FPRS; EPO; JPO; DERWENT; IBM_TDB)	OR	OFF	OFF	2024/11/30 03:34 PM
L532	22	L21 AND ((G06Q30/0202 OR G06Q40/04 OR G06Q10/0637 OR G06Q10/067 OR G06Q30/0201 OR G06Q30/0205 OR G06Q40/06 OR G06Q40/08 OR G06N5/04 OR G06N7/005 OR G06N99/005 OR H04L63/1425 OR	(US-PGPUB; USPAT; USOCR; FPRS; EPO; JPO; DERWENT; IBM_TDB)	OR	OFF	OFF	2024/11/30 03:34 PM

		H04L63/1441).CPC.)					
L533	9988	726/2.ccls.	(US-PGPUB; USPAT; USOCR; FPRS; EPO; JPO; DERWENT; IBM_TDB)	OR	OFF	OFF	2024/11/30 03:34 PM
L534	3429	726/21.ccls.	(US-PGPUB; USPAT; USOCR; FPRS; EPO; JPO; DERWENT; IBM_TDB)	OR	OFF	OFF	2024/11/30 03:34 PM
L535	389	726/36.ccls.	(US-PGPUB; USPAT; USOCR; FPRS; EPO; JPO; DERWENT; IBM_TDB)	OR	OFF	OFF	2024/11/30 03:34 PM
L536	5930	713/150.ccls.	(US-PGPUB; USPAT; USOCR; FPRS; EPO; JPO; DERWENT; IBM_TDB)	OR	OFF	OFF	2024/11/30 03:34 PM
L537	1147	713/163.ccls.	(US-PGPUB; USPAT; USOCR; FPRS; EPO; JPO; DERWENT; IBM_TDB)	OR	OFF	OFF	2024/11/30 03:34 PM
L538	2183	713/181.ccls.	(US-PGPUB; USPAT; USOCR; FPRS; EPO; JPO; DERWENT; IBM_TDB)	OR	OFF	OFF	2024/11/30 03:34 PM
L539	3674	380/255.ccls.	(US-PGPUB; USPAT; USOCR; FPRS; EPO; JPO; DERWENT; IBM_TDB)	OR	OFF	OFF	2024/11/30 03:34 PM
L540	432	380/264.ccls.	(US-PGPUB; USPAT; USOCR; FPRS; EPO; JPO; DERWENT; IBM_TDB)	OR	OFF	OFF	2024/11/30 03:34 PM
L541	163	380/276.ccls.	(US-PGPUB; USPAT; USOCR; FPRS; EPO; JPO; DERWENT; IBM_TDB)	OR	OFF	OFF	2024/11/30 03:34 PM
L542	0	L21 and L23	(US-PGPUB; USPAT; USOCR; FPRS; EPO; JPO; DERWENT; IBM_TDB)	OR	OFF	OFF	2024/11/30 03:34 PM
L543	0	L21 and L24	(US-PGPUB; USPAT; USOCR; FPRS; EPO; JPO; DERWENT; IBM_TDB)	OR	OFF	OFF	2024/11/30 03:34 PM
L544	0	L21 and L25	(US-PGPUB; USPAT; USOCR; FPRS; EPO; JPO; DERWENT; IBM_TDB)	OR	OFF	OFF	2024/11/30 03:34 PM
L545	0	L21 and L26	(US-PGPUB; USPAT; USOCR; FPRS; EPO; JPO; DERWENT; IBM_TDB)	OR	OFF	OFF	2024/11/30 03:34 PM

L546	0	L21 and L27	(US-PGPUB; USPAT; USOCR; FPRS; EPO; JPO; DERWENT; IBM_TDB)	OR	OFF	OFF	2024/11/30 03:34 PM
L547	0	L21 and L28	(US-PGPUB; USPAT; USOCR; FPRS; EPO; JPO; DERWENT; IBM_TDB)	OR	OFF	OFF	2024/11/30 03:34 PM
L548	0	L21 and L29	(US-PGPUB; USPAT; USOCR; FPRS; EPO; JPO; DERWENT; IBM_TDB)	OR	OFF	OFF	2024/11/30 03:34 PM
L549	0	L21 and L30	(US-PGPUB; USPAT; USOCR; FPRS; EPO; JPO; DERWENT; IBM_TDB)	OR	OFF	OFF	2024/11/30 03:34 PM
L550	0	L21 and L31	(US-PGPUB; USPAT; USOCR; FPRS; EPO; JPO; DERWENT; IBM_TDB)	OR	OFF	OFF	2024/11/30 03:34 PM
L551	4	("20050000165"|"20140359552"|"20160006629"|"7171515").PN.	(US-PGPUB; USPAT)	OR	OFF	OFF	2024/11/30 03:34 PM
L552	329	"15237625"	(US-PGPUB; USPAT; USOCR; FPRS; EPO; JPO; DERWENT; IBM_TDB)	OR	OFF	OFF	2024/11/30 03:34 PM
L553	28028	726/23	(US-PGPUB; USPAT; USOCR; FPRS; EPO; JPO; DERWENT; IBM_TDB)	OR	OFF	OFF	2024/11/30 03:34 PM
L554	11197	726/23.ccls.	(US-PGPUB; USPAT; USOCR; FPRS; EPO; JPO; DERWENT; IBM_TDB)	OR	OFF	OFF	2024/11/30 03:34 PM
L555	329	"15237625"	(US-PGPUB; USPAT; USOCR; FPRS; EPO; JPO; DERWENT; IBM_TDB)	OR	OFF	OFF	2024/11/30 03:34 PM
L556	525	(jason near2 crabtree).inv.	(US-PGPUB; USPAT; USOCR; FPRS; EPO; JPO; DERWENT; IBM_TDB)	OR	OFF	OFF	2024/11/30 03:34 PM
L557	4	(fractal near2 industries).as.	(US-PGPUB; USPAT; USOCR; FPRS; EPO; JPO; DERWENT; IBM_TDB)	OR	OFF	OFF	2024/11/30 03:34 PM
L558	409	"14925974"	(US-PGPUB; USPAT; USOCR; FPRS; EPO; JPO; DERWENT; IBM_TDB)	OR	OFF	OFF	2024/11/30 03:34 PM
L559	0	("14925974").PN.	(US-PGPUB; USPAT; USOCR; FPRS; EPO;	OR	OFF	OFF	2024/11/30 03:34 PM

			JPO; DERWENT; IBM_TDB)				
L560	0	("15237625").PN.	(US-PGPUB; USPAT; USOCR; FPRS; EPO; JPO; DERWENT; IBM_TDB)	OR	OFF	OFF	2024/11/30 03:34 PM
L561	158	L48 and (time series).clm.	(US-PGPUB; USPAT; USOCR; FPRS; EPO; JPO; DERWENT; IBM_TDB)	OR	OFF	OFF	2024/11/30 03:34 PM
L562	2	((predictive near2 planning) same (real near2 time near2 triage near2 analysis))	(US-PGPUB; USPAT; USOCR; FPRS; EPO; JPO; DERWENT; IBM_TDB)	OR	OFF	OFF	2024/11/30 03:34 PM
L563	6410653	((predictive near2 planning) same (real near2 time) with triage analysis)	(US-PGPUB; USPAT; USOCR; FPRS; EPO; JPO; DERWENT; IBM_TDB)	OR	OFF	OFF	2024/11/30 03:34 PM
L564	2	((predictive near2 planning) same (real near2 time) with triage with analysis)	(US-PGPUB; USPAT; USOCR; FPRS; EPO; JPO; DERWENT; IBM_TDB)	OR	OFF	OFF	2024/11/30 03:34 PM
L565	59	((real near2 time) with triage with analysis)	(US-PGPUB; USPAT; USOCR; FPRS; EPO; JPO; DERWENT; IBM_TDB)	OR	OFF	OFF	2024/11/30 03:34 PM
L566	0	L61 and (predicitve near2 planning)	(US-PGPUB; USPAT; USOCR; FPRS; EPO; JPO; DERWENT; IBM_TDB)	OR	OFF	OFF	2024/11/30 03:34 PM
L567	2	L61 and (cyber near3 attack$5)	(US-PGPUB; USPAT; USOCR; FPRS; EPO; JPO; DERWENT; IBM_TDB)	OR	OFF	OFF	2024/11/30 03:34 PM
L568	6	L61 and (cybersecurity)	(US-PGPUB; USPAT; USOCR; FPRS; EPO; JPO; DERWENT; IBM_TDB)	OR	OFF	OFF	2024/11/30 03:34 PM
L569	6	L61 and (cyber$1security)	(US-PGPUB; USPAT; USOCR; FPRS; EPO; JPO; DERWENT; IBM_TDB)	OR	OFF	OFF	2024/11/30 03:34 PM
L570	0	(predicitve near2 planning)	(US-PGPUB; USPAT; USOCR; FPRS; EPO; JPO; DERWENT; IBM_TDB)	OR	OFF	OFF	2024/11/30 03:34 PM
L571	1293	(predictive near2 planning)	(US-PGPUB; USPAT; USOCR; FPRS; EPO; JPO; DERWENT; IBM_TDB)	OR	OFF	OFF	2024/11/30 03:34 PM
L572	24	L67 and (cyber$1security)	(US-PGPUB; USPAT; USOCR; FPRS; EPO; JPO; DERWENT;	OR	OFF	OFF	2024/11/30 03:34 PM

			IBM_TDB)				
L573	22	L68 AND ((G06Q30/0202 OR G06Q40/04 OR G06Q10/0637 OR G06Q10/067 OR G06Q30/0201 OR G06Q30/0205 OR G06Q40/06 OR G06Q40/08 OR G06N5/04 OR G06N7/005 OR G06N99/005 OR H04L63/1425 OR H04L63/1441).CPC.)	(US-PGPUB; USPAT; USOCR; FPRS; EPO; JPO; DERWENT; IBM_TDB)	OR	OFF	OFF	2024/11/30 03:34 PM
L574	9988	726/2.ccls.	(US-PGPUB; USPAT; USOCR; FPRS; EPO; JPO; DERWENT; IBM_TDB)	OR	OFF	OFF	2024/11/30 03:34 PM
L575	3429	726/21.ccls.	(US-PGPUB; USPAT; USOCR; FPRS; EPO; JPO; DERWENT; IBM_TDB)	OR	OFF	OFF	2024/11/30 03:34 PM
L576	389	726/36.ccls.	(US-PGPUB; USPAT; USOCR; FPRS; EPO; JPO; DERWENT; IBM_TDB)	OR	OFF	OFF	2024/11/30 03:34 PM
L577	5930	713/150.ccls.	(US-PGPUB; USPAT; USOCR; FPRS; EPO; JPO; DERWENT; IBM_TDB)	OR	OFF	OFF	2024/11/30 03:34 PM
L578	1147	713/163.ccls.	(US-PGPUB; USPAT; USOCR; FPRS; EPO; JPO; DERWENT; IBM_TDB)	OR	OFF	OFF	2024/11/30 03:34 PM
L579	2183	713/181.ccls.	(US-PGPUB; USPAT; USOCR; FPRS; EPO; JPO; DERWENT; IBM_TDB)	OR	OFF	OFF	2024/11/30 03:34 PM
L580	3674	380/255.ccls.	(US-PGPUB; USPAT; USOCR; FPRS; EPO; JPO; DERWENT; IBM_TDB)	OR	OFF	OFF	2024/11/30 03:34 PM
L581	432	380/264.ccls.	(US-PGPUB; USPAT; USOCR; FPRS; EPO; JPO; DERWENT; IBM_TDB)	OR	OFF	OFF	2024/11/30 03:34 PM
L582	163	380/276.ccls.	(US-PGPUB; USPAT; USOCR; FPRS; EPO; JPO; DERWENT; IBM_TDB)	OR	OFF	OFF	2024/11/30 03:34 PM
L583	0	L68 and L70	(US-PGPUB; USPAT; USOCR; FPRS; EPO; JPO; DERWENT;	OR	OFF	OFF	2024/11/30 03:34 PM

			IBM_TDB)				
L584	0	L68 and L71	(US-PGPUB; USPAT; USOCR; FPRS; EPO; JPO; DERWENT; IBM_TDB)	OR	OFF	OFF	2024/11/30 03:34 PM
L585	0	L68 and L72	(US-PGPUB; USPAT; USOCR; FPRS; EPO; JPO; DERWENT; IBM_TDB)	OR	OFF	OFF	2024/11/30 03:34 PM
L586	0	L68 and L73	(US-PGPUB; USPAT; USOCR; FPRS; EPO; JPO; DERWENT; IBM_TDB)	OR	OFF	OFF	2024/11/30 03:34 PM
L587	0	L68 and L74	(US-PGPUB; USPAT; USOCR; FPRS; EPO; JPO; DERWENT; IBM_TDB)	OR	OFF	OFF	2024/11/30 03:34 PM
L588	0	L68 and L75	(US-PGPUB; USPAT; USOCR; FPRS; EPO; JPO; DERWENT; IBM_TDB)	OR	OFF	OFF	2024/11/30 03:34 PM
L589	0	L68 and L76	(US-PGPUB; USPAT; USOCR; FPRS; EPO; JPO; DERWENT; IBM_TDB)	OR	OFF	OFF	2024/11/30 03:34 PM
L590	0	L68 and L77	(US-PGPUB; USPAT; USOCR; FPRS; EPO; JPO; DERWENT; IBM_TDB)	OR	OFF	OFF	2024/11/30 03:34 PM
L591	0	L68 and L78	(US-PGPUB; USPAT; USOCR; FPRS; EPO; JPO; DERWENT; IBM_TDB)	OR	OFF	OFF	2024/11/30 03:34 PM
L592	4	("20050000165"|"20140359552"|"20160006629"|"7171515").PN.	(US-PGPUB; USPAT)	OR	OFF	OFF	2024/11/30 03:34 PM
L593	329	"15237625"	(US-PGPUB; USPAT; USOCR; FPRS; EPO; JPO; DERWENT; IBM_TDB)	OR	OFF	OFF	2024/11/30 03:34 PM
L594	28028	726/23	(US-PGPUB; USPAT; USOCR; FPRS; EPO; JPO; DERWENT; IBM_TDB)	OR	OFF	OFF	2024/11/30 03:34 PM
L595	11197	726/23.ccls.	(US-PGPUB; USPAT; USOCR; FPRS; EPO; JPO; DERWENT; IBM_TDB)	OR	OFF	OFF	2024/11/30 03:34 PM
L596	329	"15237625"	(US-PGPUB; USPAT; USOCR; FPRS; EPO; JPO; DERWENT; IBM_TDB)	OR	OFF	OFF	2024/11/30 03:34 PM
L597	525	(jason near2	(US-PGPUB; USPAT;	OR	OFF	OFF	2024/11/30

		crabtree).inv.	USOCR; FPRS; EPO; JPO; DERWENT; IBM_TDB)				03:34 PM
L598	4	(fractal near2 industries).as.	(US-PGPUB; USPAT; USOCR; FPRS; EPO; JPO; DERWENT; IBM_TDB)	OR	OFF	OFF	2024/11/30 03:34 PM
L599	409	"14925974"	(US-PGPUB; USPAT; USOCR; FPRS; EPO; JPO; DERWENT; IBM_TDB)	OR	OFF	OFF	2024/11/30 03:34 PM
L600	0	("14925974").PN.	(US-PGPUB; USPAT; USOCR; FPRS; EPO; JPO; DERWENT; IBM_TDB)	OR	OFF	OFF	2024/11/30 03:34 PM
L601	0	("15237625").PN.	(US-PGPUB; USPAT; USOCR; FPRS; EPO; JPO; DERWENT; IBM_TDB)	OR	OFF	OFF	2024/11/30 03:34 PM
L602	158	L95 and (time series).clm.	(US-PGPUB; USPAT; USOCR; FPRS; EPO; JPO; DERWENT; IBM_TDB)	OR	OFF	OFF	2024/11/30 03:34 PM
L603	2	((predictive near2 planning) same (real near2 time near2 triage near2 analysis))	(US-PGPUB; USPAT; USOCR; FPRS; EPO; JPO; DERWENT; IBM_TDB)	OR	OFF	OFF	2024/11/30 03:34 PM
L604	6410653	((predictive near2 planning) same (real near2 time) with triage analysis)	(US-PGPUB; USPAT; USOCR; FPRS; EPO; JPO; DERWENT; IBM_TDB)	OR	OFF	OFF	2024/11/30 03:34 PM
L605	2	((predictive near2 planning) same (real near2 time) with triage with analysis)	(US-PGPUB; USPAT; USOCR; FPRS; EPO; JPO; DERWENT; IBM_TDB)	OR	OFF	OFF	2024/11/30 03:34 PM
L606	59	((real near2 time) with triage with analysis)	(US-PGPUB; USPAT; USOCR; FPRS; EPO; JPO; DERWENT; IBM_TDB)	OR	OFF	OFF	2024/11/30 03:34 PM
L607	0	L108 and (predicitve near2 planning)	(US-PGPUB; USPAT; USOCR; FPRS; EPO; JPO; DERWENT; IBM_TDB)	OR	OFF	OFF	2024/11/30 03:34 PM
L608	2	L108 and (cyber near3 attack$5)	(US-PGPUB; USPAT; USOCR; FPRS; EPO; JPO; DERWENT; IBM_TDB)	OR	OFF	OFF	2024/11/30 03:34 PM
L609	6	L108 and (cybersecurity)	(US-PGPUB; USPAT; USOCR; FPRS; EPO; JPO; DERWENT; IBM_TDB)	OR	OFF	OFF	2024/11/30 03:34 PM
L610	6	L108 and (cyber$1security)	(US-PGPUB; USPAT; USOCR; FPRS; EPO;	OR	OFF	OFF	2024/11/30 03:34 PM

			JPO; DERWENT; IBM_TDB)				
L611	0	(predicitve near2 planning)	(US-PGPUB; USPAT; USOCR; FPRS; EPO; JPO; DERWENT; IBM_TDB)	OR	OFF	OFF	2024/11/30 03:34 PM
L612	1293	(predictive near2 planning)	(US-PGPUB; USPAT; USOCR; FPRS; EPO; JPO; DERWENT; IBM_TDB)	OR	OFF	OFF	2024/11/30 03:34 PM
L613	24	L114 and (cyber$1security)	(US-PGPUB; USPAT; USOCR; FPRS; EPO; JPO; DERWENT; IBM_TDB)	OR	OFF	OFF	2024/11/30 03:34 PM
L614	22	L115 AND ((G06Q30/0202 OR G06Q40/04 OR G06Q10/0637 OR G06Q10/067 OR G06Q30/0201 OR G06Q30/0205 OR G06Q40/06 OR G06Q40/08 OR G06N5/04 OR G06N7/005 OR G06N99/005 OR H04L63/1425 OR H04L63/1441).CPC.)	(US-PGPUB; USPAT; USOCR; FPRS; EPO; JPO; DERWENT; IBM_TDB)	OR	OFF	OFF	2024/11/30 03:34 PM
L615	9988	726/2.ccls.	(US-PGPUB; USPAT; USOCR; FPRS; EPO; JPO; DERWENT; IBM_TDB)	OR	OFF	OFF	2024/11/30 03:34 PM
L616	3429	726/21.ccls.	(US-PGPUB; USPAT; USOCR; FPRS; EPO; JPO; DERWENT; IBM_TDB)	OR	OFF	OFF	2024/11/30 03:34 PM
L617	389	726/36.ccls.	(US-PGPUB; USPAT; USOCR; FPRS; EPO; JPO; DERWENT; IBM_TDB)	OR	OFF	OFF	2024/11/30 03:34 PM
L618	5930	713/150.ccls.	(US-PGPUB; USPAT; USOCR; FPRS; EPO; JPO; DERWENT; IBM_TDB)	OR	OFF	OFF	2024/11/30 03:34 PM
L619	1147	713/163.ccls.	(US-PGPUB; USPAT; USOCR; FPRS; EPO; JPO; DERWENT; IBM_TDB)	OR	OFF	OFF	2024/11/30 03:34 PM
L620	2183	713/181.ccls.	(US-PGPUB; USPAT; USOCR; FPRS; EPO; JPO; DERWENT; IBM_TDB)	OR	OFF	OFF	2024/11/30 03:34 PM
L621	3674	380/255.ccls.	(US-PGPUB; USPAT; USOCR; FPRS; EPO;	OR	OFF	OFF	2024/11/30 03:34 PM

			JPO; DERWENT; IBM_TDB)				
L622	432	380/264.ccls.	(US-PGPUB; USPAT; USOCR; FPRS; EPO; JPO; DERWENT; IBM_TDB)	OR	OFF	OFF	2024/11/30 03:34 PM
L623	163	380/276.ccls.	(US-PGPUB; USPAT; USOCR; FPRS; EPO; JPO; DERWENT; IBM_TDB)	OR	OFF	OFF	2024/11/30 03:34 PM
L624	0	L115 and L117	(US-PGPUB; USPAT; USOCR; FPRS; EPO; JPO; DERWENT; IBM_TDB)	OR	OFF	OFF	2024/11/30 03:34 PM
L625	0	L115 and L118	(US-PGPUB; USPAT; USOCR; FPRS; EPO; JPO; DERWENT; IBM_TDB)	OR	OFF	OFF	2024/11/30 03:34 PM
L626	0	L115 and L119	(US-PGPUB; USPAT; USOCR; FPRS; EPO; JPO; DERWENT; IBM_TDB)	OR	OFF	OFF	2024/11/30 03:34 PM
L627	0	L115 and L120	(US-PGPUB; USPAT; USOCR; FPRS; EPO; JPO; DERWENT; IBM_TDB)	OR	OFF	OFF	2024/11/30 03:34 PM
L628	0	L115 and L121	(US-PGPUB; USPAT; USOCR; FPRS; EPO; JPO; DERWENT; IBM_TDB)	OR	OFF	OFF	2024/11/30 03:34 PM
L629	0	L115 and L122	(US-PGPUB; USPAT; USOCR; FPRS; EPO; JPO; DERWENT; IBM_TDB)	OR	OFF	OFF	2024/11/30 03:34 PM
L630	0	L115 and L123	(US-PGPUB; USPAT; USOCR; FPRS; EPO; JPO; DERWENT; IBM_TDB)	OR	OFF	OFF	2024/11/30 03:34 PM
L631	0	L115 and L124	(US-PGPUB; USPAT; USOCR; FPRS; EPO; JPO; DERWENT; IBM_TDB)	OR	OFF	OFF	2024/11/30 03:34 PM
L632	0	L115 and L125	(US-PGPUB; USPAT; USOCR; FPRS; EPO; JPO; DERWENT; IBM_TDB)	OR	OFF	OFF	2024/11/30 03:34 PM
L633	4	("20050000165"|"20140359552"|"20160006629"|"7171515").PN.	(US-PGPUB; USPAT)	OR	OFF	OFF	2024/11/30 03:34 PM
L634	329	"15237625"	(US-PGPUB; USPAT; USOCR; FPRS; EPO; JPO; DERWENT; IBM_TDB)	OR	OFF	OFF	2024/11/30 03:34 PM

L635	28028	726/23	(US-PGPUB; USPAT; USOCR; FPRS; EPO; JPO; DERWENT; IBM_TDB)	OR	OFF	OFF	2024/11/30 03:34 PM
L636	11197	726/23.ccls.	(US-PGPUB; USPAT; USOCR; FPRS; EPO; JPO; DERWENT; IBM_TDB)	OR	OFF	OFF	2024/11/30 03:34 PM
L637	329	"15237625"	(US-PGPUB; USPAT; USOCR; FPRS; EPO; JPO; DERWENT; IBM_TDB)	OR	OFF	OFF	2024/11/30 03:34 PM
L638	525	(jason near2 crabtree).inv.	(US-PGPUB; USPAT; USOCR; FPRS; EPO; JPO; DERWENT; IBM_TDB)	OR	OFF	OFF	2024/11/30 03:34 PM
L639	4	(fractal near2 industries).as.	(US-PGPUB; USPAT; USOCR; FPRS; EPO; JPO; DERWENT; IBM_TDB)	OR	OFF	OFF	2024/11/30 03:34 PM
L640	409	"14925974"	(US-PGPUB; USPAT; USOCR; FPRS; EPO; JPO; DERWENT; IBM_TDB)	OR	OFF	OFF	2024/11/30 03:34 PM
L641	0	("14925974").PN.	(US-PGPUB; USPAT; USOCR; FPRS; EPO; JPO; DERWENT; IBM_TDB)	OR	OFF	OFF	2024/11/30 03:34 PM
L642	0	("15237625").PN.	(US-PGPUB; USPAT; USOCR; FPRS; EPO; JPO; DERWENT; IBM_TDB)	OR	OFF	OFF	2024/11/30 03:34 PM
L643	158	L136 and (time series).clm.	(US-PGPUB; USPAT; USOCR; FPRS; EPO; JPO; DERWENT; IBM_TDB)	OR	OFF	OFF	2024/11/30 03:34 PM
L644	2	((predictive near2 planning) same (real near2 time near2 triage near2 analysis))	(US-PGPUB; USPAT; USOCR; FPRS; EPO; JPO; DERWENT; IBM_TDB)	OR	OFF	OFF	2024/11/30 03:34 PM
L645	6410653	((predictive near2 planning) same (real near2 time) with triage analysis)	(US-PGPUB; USPAT; USOCR; FPRS; EPO; JPO; DERWENT; IBM_TDB)	OR	OFF	OFF	2024/11/30 03:34 PM
L646	2	((predictive near2 planning) same (real near2 time) with triage with analysis)	(US-PGPUB; USPAT; USOCR; FPRS; EPO; JPO; DERWENT; IBM_TDB)	OR	OFF	OFF	2024/11/30 03:34 PM
L647	59	((real near2 time) with triage with analysis)	(US-PGPUB; USPAT; USOCR; FPRS; EPO; JPO; DERWENT; IBM_TDB)	OR	OFF	OFF	2024/11/30 03:34 PM
L648	0	L149 and (predicitve	(US-PGPUB; USPAT;	OR	OFF	OFF	2024/11/30

		near2 planning)	USOCR; FPRS; EPO; JPO; DERWENT; IBM_TDB)				03:34 PM
L649	2	L149 and (cyber near3 attack$5)	(US-PGPUB; USPAT; USOCR; FPRS; EPO; JPO; DERWENT; IBM_TDB)	OR	OFF	OFF	2024/11/30 03:34 PM
L650	6	L149 and (cybersecurity)	(US-PGPUB; USPAT; USOCR; FPRS; EPO; JPO; DERWENT; IBM_TDB)	OR	OFF	OFF	2024/11/30 03:34 PM
L651	6	L149 and (cyber$1security)	(US-PGPUB; USPAT; USOCR; FPRS; EPO; JPO; DERWENT; IBM_TDB)	OR	OFF	OFF	2024/11/30 03:34 PM
L652	0	(predicitve near2 planning)	(US-PGPUB; USPAT; USOCR; FPRS; EPO; JPO; DERWENT; IBM_TDB)	OR	OFF	OFF	2024/11/30 03:34 PM
L653	1293	(predictive near2 planning)	(US-PGPUB; USPAT; USOCR; FPRS; EPO; JPO; DERWENT; IBM_TDB)	OR	OFF	OFF	2024/11/30 03:34 PM
L654	24	L155 and (cyber$1security)	(US-PGPUB; USPAT; USOCR; FPRS; EPO; JPO; DERWENT; IBM_TDB)	OR	OFF	OFF	2024/11/30 03:34 PM
L655	22	L156 AND ((G06Q30/0202 OR G06Q40/04 OR G06Q10/0637 OR G06Q10/067 OR G06Q30/0201 OR G06Q30/0205 OR G06Q40/06 OR G06Q40/08 OR G06N5/04 OR G06N7/005 OR G06N99/005 OR H04L63/1425 OR H04L63/1441).CPC.)	(US-PGPUB; USPAT; USOCR; FPRS; EPO; JPO; DERWENT; IBM_TDB)	OR	OFF	OFF	2024/11/30 03:34 PM
L656	9988	726/2.ccls.	(US-PGPUB; USPAT; USOCR; FPRS; EPO; JPO; DERWENT; IBM_TDB)	OR	OFF	OFF	2024/11/30 03:34 PM
L657	3429	726/21.ccls.	(US-PGPUB; USPAT; USOCR; FPRS; EPO; JPO; DERWENT; IBM_TDB)	OR	OFF	OFF	2024/11/30 03:34 PM
L658	389	726/36.ccls.	(US-PGPUB; USPAT; USOCR; FPRS; EPO; JPO; DERWENT; IBM_TDB)	OR	OFF	OFF	2024/11/30 03:34 PM
L659	5930	713/150.ccls.	(US-PGPUB; USPAT;	OR	OFF	OFF	2024/11/30

			USOCR; FPRS; EPO; JPO; DERWENT; IBM_TDB)				03:34 PM
L660	1147	713/163.ccls.	(US-PGPUB; USPAT; USOCR; FPRS; EPO; JPO; DERWENT; IBM_TDB)	OR	OFF	OFF	2024/11/30 03:34 PM
L661	2183	713/181.ccls.	(US-PGPUB; USPAT; USOCR; FPRS; EPO; JPO; DERWENT; IBM_TDB)	OR	OFF	OFF	2024/11/30 03:34 PM
L662	3674	380/255.ccls.	(US-PGPUB; USPAT; USOCR; FPRS; EPO; JPO; DERWENT; IBM_TDB)	OR	OFF	OFF	2024/11/30 03:34 PM
L663	432	380/264.ccls.	(US-PGPUB; USPAT; USOCR; FPRS; EPO; JPO; DERWENT; IBM_TDB)	OR	OFF	OFF	2024/11/30 03:34 PM
L664	163	380/276.ccls.	(US-PGPUB; USPAT; USOCR; FPRS; EPO; JPO; DERWENT; IBM_TDB)	OR	OFF	OFF	2024/11/30 03:34 PM
L665	0	L156 and L158	(US-PGPUB; USPAT; USOCR; FPRS; EPO; JPO; DERWENT; IBM_TDB)	OR	OFF	OFF	2024/11/30 03:34 PM
L666	0	L156 and L159	(US-PGPUB; USPAT; USOCR; FPRS; EPO; JPO; DERWENT; IBM_TDB)	OR	OFF	OFF	2024/11/30 03:34 PM
L667	0	L156 and L160	(US-PGPUB; USPAT; USOCR; FPRS; EPO; JPO; DERWENT; IBM_TDB)	OR	OFF	OFF	2024/11/30 03:34 PM
L668	0	L156 and L161	(US-PGPUB; USPAT; USOCR; FPRS; EPO; JPO; DERWENT; IBM_TDB)	OR	OFF	OFF	2024/11/30 03:34 PM
L669	0	L156 and L162	(US-PGPUB; USPAT; USOCR; FPRS; EPO; JPO; DERWENT; IBM_TDB)	OR	OFF	OFF	2024/11/30 03:34 PM
L670	0	L156 and L163	(US-PGPUB; USPAT; USOCR; FPRS; EPO; JPO; DERWENT; IBM_TDB)	OR	OFF	OFF	2024/11/30 03:34 PM
L671	0	L156 and L164	(US-PGPUB; USPAT; USOCR; FPRS; EPO; JPO; DERWENT; IBM_TDB)	OR	OFF	OFF	2024/11/30 03:34 PM
L672	0	L156 and L165	(US-PGPUB; USPAT; USOCR; FPRS; EPO;	OR	OFF	OFF	2024/11/30 03:34 PM

			JPO; DERWENT; IBM_TDB)				
L673	0	L156 and L166	(US-PGPUB; USPAT; USOCR; FPRS; EPO; JPO; DERWENT; IBM_TDB)	OR	OFF	OFF	2024/11/30 03:34 PM
L674	4	("20050000165"|"20140359552"|"20160006629"|"7171515").PN.	(US-PGPUB; USPAT)	OR	OFF	OFF	2024/11/30 03:34 PM
L675	124	L99 and (time near2 series).clm.	(US-PGPUB; USPAT; USOCR; FPRS; EPO; JPO; DERWENT; IBM_TDB)	OR	OFF	OFF	2024/11/30 03:34 PM
L676	50	L99 and ((time near2 series) with multi$dimensional).clm.	(US-PGPUB; USPAT; USOCR; FPRS; EPO; JPO; DERWENT; IBM_TDB)	OR	OFF	OFF	2024/11/30 03:34 PM
L677	2	("20160275123"|"6256544").PN.	(US-PGPUB; USPAT)	OR	OFF	OFF	2024/11/30 03:34 PM
L678	17	"15790860"	(US-PGPUB; USPAT; USOCR; FPRS; EPO; JPO; DERWENT; IBM_TDB)	OR	OFF	OFF	2024/11/30 03:34 PM
L679	28	"20150020199"	(US-PGPUB; USPAT; USOCR; FPRS; EPO; JPO; DERWENT; IBM_TDB)	OR	OFF	OFF	2024/11/30 03:34 PM
L680	28	"20160006629"	(US-PGPUB; USPAT; USOCR; FPRS; EPO; JPO; DERWENT; IBM_TDB)	OR	OFF	OFF	2024/11/30 03:34 PM
L681	40	"20140359552"	(US-PGPUB; USPAT; USOCR; FPRS; EPO; JPO; DERWENT; IBM_TDB)	OR	OFF	OFF	2024/11/30 03:34 PM
L682	7	(US-20160006629-$ or US-20140359552-$ or US-20050000165-$ or US-20160275123-$ or US-20150020199-$).did. or (US-7171515-$ or US-6256544-$).did.	(US-PGPUB; USPAT)	OR	OFF	OFF	2024/11/30 03:34 PM
L683	0	L184 and (network with traffice with monitor$5)	(US-PGPUB; USPAT; USOCR; FPRS; EPO; JPO; DERWENT; IBM_TDB)	OR	OFF	OFF	2024/11/30 03:34 PM
L684	1	L184 and (network with traffic with monitor$5)	(US-PGPUB; USPAT; USOCR; FPRS; EPO; JPO; DERWENT; IBM_TDB)	OR	OFF	OFF	2024/11/30 03:34 PM
L685	1	L184 and (network with traffic with (scan$5 or monitor$5))	(US-PGPUB; USPAT; USOCR; FPRS; EPO; JPO; DERWENT;	OR	OFF	OFF	2024/11/30 03:34 PM

			IBM_TDB)				
L686	1	L184 and (network with (flow$1 or traffic) with (scan$5 or monitor$5))	(US-PGPUB; USPAT; USOCR; FPRS; EPO; JPO; DERWENT; IBM_TDB)	OR	OFF	OFF	2024/11/30 03:34 PM
L687	1	L184 and (network near3 (scan$5 or monitor$5))	(US-PGPUB; USPAT; USOCR; FPRS; EPO; JPO; DERWENT; IBM_TDB)	OR	OFF	OFF	2024/11/30 03:34 PM
L688	5	L184 and (baseline$1 or threshold$1 or limit$1)	(US-PGPUB; USPAT; USOCR; FPRS; EPO; JPO; DERWENT; IBM_TDB)	OR	OFF	OFF	2024/11/30 03:34 PM
L689	1	L184 and (score$1)	(US-PGPUB; USPAT; USOCR; FPRS; EPO; JPO; DERWENT; IBM_TDB)	OR	OFF	OFF	2024/11/30 03:34 PM
L690	75	"20130117852"	(US-PGPUB; USPAT; USOCR; FPRS; EPO; JPO; DERWENT; IBM_TDB)	OR	OFF	OFF	2024/11/30 03:34 PM
L691	33	"20070226796"	(US-PGPUB; USPAT; USOCR; FPRS; EPO; JPO; DERWENT; IBM_TDB)	OR	OFF	OFF	2024/11/30 03:34 PM
L692	18	(US-20160006629-$ or US-20140359552-$ or US-20050000165-$ or US-20160275123-$ or US-20150020199-$ or US-20130117852-$ or US-20070226796-$).did. or (US-7171515-$ or US-6256544-$).did. or (US-20070226796-$).did.	(US-PGPUB; USPAT; DERWENT)	OR	OFF	OFF	2024/11/30 03:34 PM
L693	3	L194 and (score$1)	(US-PGPUB; USPAT; USOCR; FPRS; EPO; JPO; DERWENT; IBM_TDB)	OR	OFF	OFF	2024/11/30 03:34 PM
L694	424641	(network near3 (monitor$5 or scan$5))	(US-PGPUB; USPAT; USOCR; FPRS; EPO; JPO; DERWENT; IBM_TDB)	OR	OFF	OFF	2024/11/30 03:34 PM
L695	424641	(network near3 (monitor$5 or scan$5))	(US-PGPUB; USPAT; USOCR; FPRS; EPO; JPO; DERWENT; IBM_TDB)	OR	OFF	OFF	2024/11/30 03:34 PM
L696	1583	L209 and (score with access$6 with (resource$1 or content or application$1 or program$1))	(US-PGPUB; USPAT; USOCR; FPRS; EPO; JPO; DERWENT; IBM_TDB)	OR	OFF	OFF	2024/11/30 03:34 PM
L697	338	L210 and	(US-PGPUB; USPAT;	OR	OFF	OFF	2024/11/30

		@ad<"20151028"	USOCR; FPRS; EPO; JPO; DERWENT; IBM_TDB)				03:34 PM
L698	10	L211 and (score with (security or threat) with level$1 with (resource$1 or content or application$1 or program$1))	(US-PGPUB; USPAT; USOCR; FPRS; EPO; JPO; DERWENT; IBM_TDB)	OR	OFF	OFF	2024/11/30 03:34 PM
L699	0	L212 and (score$1 with connection)	(US-PGPUB; USPAT; USOCR; FPRS; EPO; JPO; DERWENT; IBM_TDB)	OR	OFF	OFF	2024/11/30 03:34 PM
L700	2	L212 and (score$1 with media)	(US-PGPUB; USPAT; USOCR; FPRS; EPO; JPO; DERWENT; IBM_TDB)	OR	OFF	OFF	2024/11/30 03:34 PM
L701	20	(US-20160006629-$ or US-20140359552-$ or US-20050000165-$ or US-20160275123-$ or US-20150020199-$ or US-20130117852-$ or US-20070226796-$ or US-20130111592-$).did. or (US-7171515-$ or US-6256544-$).did. or (US-20070226796-$).did.	(US-PGPUB; USPAT; DERWENT)	OR	OFF	OFF	2024/11/30 03:34 PM
L702	0	L215 and (score$1 with (verification or authentication))	(US-PGPUB; USPAT; USOCR; FPRS; EPO; JPO; DERWENT; IBM_TDB)	OR	OFF	OFF	2024/11/30 03:34 PM
L703	0	L215 and (score$1 same (verification or authentication))	(US-PGPUB; USPAT; USOCR; FPRS; EPO; JPO; DERWENT; IBM_TDB)	OR	OFF	OFF	2024/11/30 03:34 PM
L704	4	L215 and ((verification or authentication))	(US-PGPUB; USPAT; USOCR; FPRS; EPO; JPO; DERWENT; IBM_TDB)	OR	OFF	OFF	2024/11/30 03:34 PM
L705	14	L215 and (access$4 or permission$1)	(US-PGPUB; USPAT; USOCR; FPRS; EPO; JPO; DERWENT; IBM_TDB)	OR	OFF	OFF	2024/11/30 03:34 PM
L706	329	"15237625"	(US-PGPUB; USPAT; USOCR; FPRS; EPO; JPO; DERWENT; IBM_TDB)	OR	OFF	OFF	2024/11/30 03:34 PM
L707	28028	726/23	(US-PGPUB; USPAT; USOCR; FPRS; EPO; JPO; DERWENT; IBM_TDB)	OR	OFF	OFF	2024/11/30 03:34 PM
L708	11197	726/23.ccls.	(US-PGPUB; USPAT;	OR	OFF	OFF	2024/11/30

			USOCR; FPRS; EPO; JPO; DERWENT; IBM_TDB)				03:34 PM
L709	329	"15237625"	(US-PGPUB; USPAT; USOCR; FPRS; EPO; JPO; DERWENT; IBM_TDB)	OR	OFF	OFF	2024/11/30 03:34 PM
L710	525	(jason near2 crabtree).inv.	(US-PGPUB; USPAT; USOCR; FPRS; EPO; JPO; DERWENT; IBM_TDB)	OR	OFF	OFF	2024/11/30 03:34 PM
L711	4	(fractal near2 industries).as.	(US-PGPUB; USPAT; USOCR; FPRS; EPO; JPO; DERWENT; IBM_TDB)	OR	OFF	OFF	2024/11/30 03:34 PM
L712	409	"14925974"	(US-PGPUB; USPAT; USOCR; FPRS; EPO; JPO; DERWENT; IBM_TDB)	OR	OFF	OFF	2024/11/30 03:34 PM
L713	0	("14925974").PN.	(US-PGPUB; USPAT; USOCR; FPRS; EPO; JPO; DERWENT; IBM_TDB)	OR	OFF	OFF	2024/11/30 03:34 PM
L714	0	("15237625").PN.	(US-PGPUB; USPAT; USOCR; FPRS; EPO; JPO; DERWENT; IBM_TDB)	OR	OFF	OFF	2024/11/30 03:34 PM
L715	158	L220 and (time series).clm.	(US-PGPUB; USPAT; USOCR; FPRS; EPO; JPO; DERWENT; IBM_TDB)	OR	OFF	OFF	2024/11/30 03:34 PM
L716	2	((predictive near2 planning) same (real near2 time near2 triage near2 analysis))	(US-PGPUB; USPAT; USOCR; FPRS; EPO; JPO; DERWENT; IBM_TDB)	OR	OFF	OFF	2024/11/30 03:34 PM
L717	6410653	((predictive near2 planning) same (real near2 time) with triage analysis)	(US-PGPUB; USPAT; USOCR; FPRS; EPO; JPO; DERWENT; IBM_TDB)	OR	OFF	OFF	2024/11/30 03:34 PM
L718	2	((predictive near2 planning) same (real near2 time) with triage with analysis)	(US-PGPUB; USPAT; USOCR; FPRS; EPO; JPO; DERWENT; IBM_TDB)	OR	OFF	OFF	2024/11/30 03:34 PM
L719	59	((real near2 time) with triage with analysis)	(US-PGPUB; USPAT; USOCR; FPRS; EPO; JPO; DERWENT; IBM_TDB)	OR	OFF	OFF	2024/11/30 03:34 PM
L720	0	L233 and (predicitve near2 planning)	(US-PGPUB; USPAT; USOCR; FPRS; EPO; JPO; DERWENT; IBM_TDB)	OR	OFF	OFF	2024/11/30 03:34 PM
L721	2	L233 and (cyber near3 attack$5)	(US-PGPUB; USPAT; USOCR; FPRS; EPO;	OR	OFF	OFF	2024/11/30 03:34 PM

			JPO; DERWENT; IBM_TDB)				
L722	6	L233 and (cybersecurity)	(US-PGPUB; USPAT; USOCR; FPRS; EPO; JPO; DERWENT; IBM_TDB)	OR	OFF	OFF	2024/11/30 03:34 PM
L723	6	L233 and (cyber$1security)	(US-PGPUB; USPAT; USOCR; FPRS; EPO; JPO; DERWENT; IBM_TDB)	OR	OFF	OFF	2024/11/30 03:34 PM
L724	0	(predicitve near2 planning)	(US-PGPUB; USPAT; USOCR; FPRS; EPO; JPO; DERWENT; IBM_TDB)	OR	OFF	OFF	2024/11/30 03:34 PM
L725	1293	(predictive near2 planning)	(US-PGPUB; USPAT; USOCR; FPRS; EPO; JPO; DERWENT; IBM_TDB)	OR	OFF	OFF	2024/11/30 03:34 PM
L726	24	L239 and (cyber$1security)	(US-PGPUB; USPAT; USOCR; FPRS; EPO; JPO; DERWENT; IBM_TDB)	OR	OFF	OFF	2024/11/30 03:34 PM
L727	22	L240 AND ((G06Q30/0202 OR G06Q40/04 OR G06Q10/0637 OR G06Q10/067 OR G06Q30/0201 OR G06Q30/0205 OR G06Q40/06 OR G06Q40/08 OR G06N5/04 OR G06N7/005 OR G06N99/005 OR H04L63/1425 OR H04L63/1441).CPC.)	(US-PGPUB; USPAT; USOCR; FPRS; EPO; JPO; DERWENT; IBM_TDB)	OR	OFF	OFF	2024/11/30 03:34 PM
L728	9988	726/2.ccls.	(US-PGPUB; USPAT; USOCR; FPRS; EPO; JPO; DERWENT; IBM_TDB)	OR	OFF	OFF	2024/11/30 03:34 PM
L729	3429	726/21.ccls.	(US-PGPUB; USPAT; USOCR; FPRS; EPO; JPO; DERWENT; IBM_TDB)	OR	OFF	OFF	2024/11/30 03:34 PM
L730	389	726/36.ccls.	(US-PGPUB; USPAT; USOCR; FPRS; EPO; JPO; DERWENT; IBM_TDB)	OR	OFF	OFF	2024/11/30 03:34 PM
L731	5930	713/150.ccls.	(US-PGPUB; USPAT; USOCR; FPRS; EPO; JPO; DERWENT; IBM_TDB)	OR	OFF	OFF	2024/11/30 03:34 PM
L732	1147	713/163.ccls.	(US-PGPUB; USPAT; USOCR; FPRS; EPO;	OR	OFF	OFF	2024/11/30 03:34 PM

			JPO; DERWENT; IBM_TDB)				
L733	2183	713/181.ccls.	(US-PGPUB; USPAT; USOCR; FPRS; EPO; JPO; DERWENT; IBM_TDB)	OR	OFF	OFF	2024/11/30 03:34 PM
L734	3674	380/255.ccls.	(US-PGPUB; USPAT; USOCR; FPRS; EPO; JPO; DERWENT; IBM_TDB)	OR	OFF	OFF	2024/11/30 03:34 PM
L735	432	380/264.ccls.	(US-PGPUB; USPAT; USOCR; FPRS; EPO; JPO; DERWENT; IBM_TDB)	OR	OFF	OFF	2024/11/30 03:34 PM
L736	163	380/276.ccls.	(US-PGPUB; USPAT; USOCR; FPRS; EPO; JPO; DERWENT; IBM_TDB)	OR	OFF	OFF	2024/11/30 03:34 PM
L737	0	L240 and L242	(US-PGPUB; USPAT; USOCR; FPRS; EPO; JPO; DERWENT; IBM_TDB)	OR	OFF	OFF	2024/11/30 03:34 PM
L738	0	L240 and L243	(US-PGPUB; USPAT; USOCR; FPRS; EPO; JPO; DERWENT; IBM_TDB)	OR	OFF	OFF	2024/11/30 03:34 PM
L739	0	L240 and L244	(US-PGPUB; USPAT; USOCR; FPRS; EPO; JPO; DERWENT; IBM_TDB)	OR	OFF	OFF	2024/11/30 03:34 PM
L740	0	L240 and L245	(US-PGPUB; USPAT; USOCR; FPRS; EPO; JPO; DERWENT; IBM_TDB)	OR	OFF	OFF	2024/11/30 03:34 PM
L741	0	L240 and L246	(US-PGPUB; USPAT; USOCR; FPRS; EPO; JPO; DERWENT; IBM_TDB)	OR	OFF	OFF	2024/11/30 03:34 PM
L742	0	L240 and L247	(US-PGPUB; USPAT; USOCR; FPRS; EPO; JPO; DERWENT; IBM_TDB)	OR	OFF	OFF	2024/11/30 03:34 PM
L743	0	L240 and L248	(US-PGPUB; USPAT; USOCR; FPRS; EPO; JPO; DERWENT; IBM_TDB)	OR	OFF	OFF	2024/11/30 03:34 PM
L744	0	L240 and L249	(US-PGPUB; USPAT; USOCR; FPRS; EPO; JPO; DERWENT; IBM_TDB)	OR	OFF	OFF	2024/11/30 03:34 PM
L745	0	L240 and L250	(US-PGPUB; USPAT; USOCR; FPRS; EPO; JPO; DERWENT;	OR	OFF	OFF	2024/11/30 03:34 PM

			IBM_TDB)				
L746	4	("20050000165"|"20140359552"|"20160006629"|"7171515").PN.	(US-PGPUB; USPAT)	OR	OFF	OFF	2024/11/30 03:34 PM
L747	329	"15237625"	(US-PGPUB; USPAT; USOCR; FPRS; EPO; JPO; DERWENT; IBM_TDB)	OR	OFF	OFF	2024/11/30 03:34 PM
L748	28028	726/23	(US-PGPUB; USPAT; USOCR; FPRS; EPO; JPO; DERWENT; IBM_TDB)	OR	OFF	OFF	2024/11/30 03:34 PM
L749	11197	726/23.ccls.	(US-PGPUB; USPAT; USOCR; FPRS; EPO; JPO; DERWENT; IBM_TDB)	OR	OFF	OFF	2024/11/30 03:34 PM
L750	329	"15237625"	(US-PGPUB; USPAT; USOCR; FPRS; EPO; JPO; DERWENT; IBM_TDB)	OR	OFF	OFF	2024/11/30 03:34 PM
L751	525	(jason near2 crabtree).inv.	(US-PGPUB; USPAT; USOCR; FPRS; EPO; JPO; DERWENT; IBM_TDB)	OR	OFF	OFF	2024/11/30 03:34 PM
L752	4	(fractal near2 industries).as.	(US-PGPUB; USPAT; USOCR; FPRS; EPO; JPO; DERWENT; IBM_TDB)	OR	OFF	OFF	2024/11/30 03:34 PM
L753	409	"14925974"	(US-PGPUB; USPAT; USOCR; FPRS; EPO; JPO; DERWENT; IBM_TDB)	OR	OFF	OFF	2024/11/30 03:34 PM
L754	0	("14925974").PN.	(US-PGPUB; USPAT; USOCR; FPRS; EPO; JPO; DERWENT; IBM_TDB)	OR	OFF	OFF	2024/11/30 03:34 PM
L755	0	("15237625").PN.	(US-PGPUB; USPAT; USOCR; FPRS; EPO; JPO; DERWENT; IBM_TDB)	OR	OFF	OFF	2024/11/30 03:34 PM
L756	158	L261 and (time series).clm.	(US-PGPUB; USPAT; USOCR; FPRS; EPO; JPO; DERWENT; IBM_TDB)	OR	OFF	OFF	2024/11/30 03:34 PM
L757	2	((predictive near2 planning) same (real near2 time near2 triage near2 analysis))	(US-PGPUB; USPAT; USOCR; FPRS; EPO; JPO; DERWENT; IBM_TDB)	OR	OFF	OFF	2024/11/30 03:34 PM
L758	6410653	((predictive near2 planning) same (real near2 time) with triage analysis)	(US-PGPUB; USPAT; USOCR; FPRS; EPO; JPO; DERWENT; IBM_TDB)	OR	OFF	OFF	2024/11/30 03:34 PM
L759	2	((predictive near2	(US-PGPUB; USPAT;	OR	OFF	OFF	2024/11/30

		planning) same (real near2 time) with triage with analysis)	USOCR; FPRS; EPO; JPO; DERWENT; IBM_TDB)				03:34 PM
L760	59	((real near2 time) with triage with analysis)	(US-PGPUB; USPAT; USOCR; FPRS; EPO; JPO; DERWENT; IBM_TDB)	OR	OFF	OFF	2024/11/30 03:34 PM
L761	0	L274 and (predicitve near2 planning)	(US-PGPUB; USPAT; USOCR; FPRS; EPO; JPO; DERWENT; IBM_TDB)	OR	OFF	OFF	2024/11/30 03:34 PM
L762	2	L274 and (cyber near3 attack$5)	(US-PGPUB; USPAT; USOCR; FPRS; EPO; JPO; DERWENT; IBM_TDB)	OR	OFF	OFF	2024/11/30 03:34 PM
L763	6	L274 and (cybersecurity)	(US-PGPUB; USPAT; USOCR; FPRS; EPO; JPO; DERWENT; IBM_TDB)	OR	OFF	OFF	2024/11/30 03:34 PM
L764	6	L274 and (cyber$1security)	(US-PGPUB; USPAT; USOCR; FPRS; EPO; JPO; DERWENT; IBM_TDB)	OR	OFF	OFF	2024/11/30 03:34 PM
L765	0	(predicitve near2 planning)	(US-PGPUB; USPAT; USOCR; FPRS; EPO; JPO; DERWENT; IBM_TDB)	OR	OFF	OFF	2024/11/30 03:34 PM
L766	1293	(predictive near2 planning)	(US-PGPUB; USPAT; USOCR; FPRS; EPO; JPO; DERWENT; IBM_TDB)	OR	OFF	OFF	2024/11/30 03:34 PM
L767	24	L280 and (cyber$1security)	(US-PGPUB; USPAT; USOCR; FPRS; EPO; JPO; DERWENT; IBM_TDB)	OR	OFF	OFF	2024/11/30 03:34 PM
L768	22	L281 AND ((G06Q30/0202 OR G06Q40/04 OR G06Q10/0637 OR G06Q10/067 OR G06Q30/0201 OR G06Q30/0205 OR G06Q40/06 OR G06Q40/08 OR G06N5/04 OR G06N7/005 OR G06N99/005 OR H04L63/1425 OR H04L63/1441).CPC.)	(US-PGPUB; USPAT; USOCR; FPRS; EPO; JPO; DERWENT; IBM_TDB)	OR	OFF	OFF	2024/11/30 03:34 PM
L769	9988	726/2.ccls.	(US-PGPUB; USPAT; USOCR; FPRS; EPO; JPO; DERWENT; IBM_TDB)	OR	OFF	OFF	2024/11/30 03:34 PM
L770	3429	726/21.ccls.	(US-PGPUB; USPAT;	OR	OFF	OFF	2024/11/30

			USOCR; FPRS; EPO; JPO; DERWENT; IBM_TDB)				03:34 PM
L771	389	726/36.ccls.	(US-PGPUB; USPAT; USOCR; FPRS; EPO; JPO; DERWENT; IBM_TDB)	OR	OFF	OFF	2024/11/30 03:34 PM
L772	5930	713/150.ccls.	(US-PGPUB; USPAT; USOCR; FPRS; EPO; JPO; DERWENT; IBM_TDB)	OR	OFF	OFF	2024/11/30 03:34 PM
L773	1147	713/163.ccls.	(US-PGPUB; USPAT; USOCR; FPRS; EPO; JPO; DERWENT; IBM_TDB)	OR	OFF	OFF	2024/11/30 03:34 PM
L774	2183	713/181.ccls.	(US-PGPUB; USPAT; USOCR; FPRS; EPO; JPO; DERWENT; IBM_TDB)	OR	OFF	OFF	2024/11/30 03:34 PM
L775	3674	380/255.ccls.	(US-PGPUB; USPAT; USOCR; FPRS; EPO; JPO; DERWENT; IBM_TDB)	OR	OFF	OFF	2024/11/30 03:34 PM
L776	432	380/264.ccls.	(US-PGPUB; USPAT; USOCR; FPRS; EPO; JPO; DERWENT; IBM_TDB)	OR	OFF	OFF	2024/11/30 03:34 PM
L777	163	380/276.ccls.	(US-PGPUB; USPAT; USOCR; FPRS; EPO; JPO; DERWENT; IBM_TDB)	OR	OFF	OFF	2024/11/30 03:34 PM
L778	0	L281 and L283	(US-PGPUB; USPAT; USOCR; FPRS; EPO; JPO; DERWENT; IBM_TDB)	OR	OFF	OFF	2024/11/30 03:34 PM
L779	0	L281 and L284	(US-PGPUB; USPAT; USOCR; FPRS; EPO; JPO; DERWENT; IBM_TDB)	OR	OFF	OFF	2024/11/30 03:34 PM
L780	0	L281 and L285	(US-PGPUB; USPAT; USOCR; FPRS; EPO; JPO; DERWENT; IBM_TDB)	OR	OFF	OFF	2024/11/30 03:34 PM
L781	0	L281 and L286	(US-PGPUB; USPAT; USOCR; FPRS; EPO; JPO; DERWENT; IBM_TDB)	OR	OFF	OFF	2024/11/30 03:34 PM
L782	0	L281 and L287	(US-PGPUB; USPAT; USOCR; FPRS; EPO; JPO; DERWENT; IBM_TDB)	OR	OFF	OFF	2024/11/30 03:34 PM
L783	0	L281 and L288	(US-PGPUB; USPAT; USOCR; FPRS; EPO;	OR	OFF	OFF	2024/11/30 03:34 PM

			JPO; DERWENT; IBM_TDB)				
L784	0	L281 and L289	(US-PGPUB; USPAT; USOCR; FPRS; EPO; JPO; DERWENT; IBM_TDB)	OR	OFF	OFF	2024/11/30 03:34 PM
L785	0	L281 and L290	(US-PGPUB; USPAT; USOCR; FPRS; EPO; JPO; DERWENT; IBM_TDB)	OR	OFF	OFF	2024/11/30 03:34 PM
L786	0	L281 and L291	(US-PGPUB; USPAT; USOCR; FPRS; EPO; JPO; DERWENT; IBM_TDB)	OR	OFF	OFF	2024/11/30 03:34 PM
L787	4	("20050000165"|"20140359552"|"20160006629"|"7171515").PN.	(US-PGPUB; USPAT)	OR	OFF	OFF	2024/11/30 03:34 PM
L788	329	"15237625"	(US-PGPUB; USPAT; USOCR; FPRS; EPO; JPO; DERWENT; IBM_TDB)	OR	OFF	OFF	2024/11/30 03:34 PM
L789	28028	726/23	(US-PGPUB; USPAT; USOCR; FPRS; EPO; JPO; DERWENT; IBM_TDB)	OR	OFF	OFF	2024/11/30 03:34 PM
L790	11197	726/23.ccls.	(US-PGPUB; USPAT; USOCR; FPRS; EPO; JPO; DERWENT; IBM_TDB)	OR	OFF	OFF	2024/11/30 03:34 PM
L791	329	"15237625"	(US-PGPUB; USPAT; USOCR; FPRS; EPO; JPO; DERWENT; IBM_TDB)	OR	OFF	OFF	2024/11/30 03:34 PM
L792	525	(jason near2 crabtree).inv.	(US-PGPUB; USPAT; USOCR; FPRS; EPO; JPO; DERWENT; IBM_TDB)	OR	OFF	OFF	2024/11/30 03:34 PM
L793	4	(fractal near2 industries).as.	(US-PGPUB; USPAT; USOCR; FPRS; EPO; JPO; DERWENT; IBM_TDB)	OR	OFF	OFF	2024/11/30 03:34 PM
L794	409	"14925974"	(US-PGPUB; USPAT; USOCR; FPRS; EPO; JPO; DERWENT; IBM_TDB)	OR	OFF	OFF	2024/11/30 03:34 PM
L795	0	("14925974").PN.	(US-PGPUB; USPAT; USOCR; FPRS; EPO; JPO; DERWENT; IBM_TDB)	OR	OFF	OFF	2024/11/30 03:34 PM
L796	0	("15237625").PN.	(US-PGPUB; USPAT; USOCR; FPRS; EPO; JPO; DERWENT; IBM_TDB)	OR	OFF	OFF	2024/11/30 03:34 PM

L797	158	L302 and (time series).clm.	(US-PGPUB; USPAT; USOCR; FPRS; EPO; JPO; DERWENT; IBM_TDB)	OR	OFF	OFF	2024/11/30 03:34 PM
L798	2	((predictive near2 planning) same (real near2 time near2 triage near2 analysis))	(US-PGPUB; USPAT; USOCR; FPRS; EPO; JPO; DERWENT; IBM_TDB)	OR	OFF	OFF	2024/11/30 03:34 PM
L799	6410653	((predictive near2 planning) same (real near2 time) with triage analysis)	(US-PGPUB; USPAT; USOCR; FPRS; EPO; JPO; DERWENT; IBM_TDB)	OR	OFF	OFF	2024/11/30 03:34 PM
L800	2	((predictive near2 planning) same (real near2 time) with triage with analysis)	(US-PGPUB; USPAT; USOCR; FPRS; EPO; JPO; DERWENT; IBM_TDB)	OR	OFF	OFF	2024/11/30 03:34 PM
L801	59	((real near2 time) with triage with analysis)	(US-PGPUB; USPAT; USOCR; FPRS; EPO; JPO; DERWENT; IBM_TDB)	OR	OFF	OFF	2024/11/30 03:34 PM
L802	0	L315 and (predicitve near2 planning)	(US-PGPUB; USPAT; USOCR; FPRS; EPO; JPO; DERWENT; IBM_TDB)	OR	OFF	OFF	2024/11/30 03:34 PM
L803	2	L315 and (cyber near3 attack$5)	(US-PGPUB; USPAT; USOCR; FPRS; EPO; JPO; DERWENT; IBM_TDB)	OR	OFF	OFF	2024/11/30 03:34 PM
L804	6	L315 and (cybersecurity)	(US-PGPUB; USPAT; USOCR; FPRS; EPO; JPO; DERWENT; IBM_TDB)	OR	OFF	OFF	2024/11/30 03:34 PM
L805	6	L315 and (cyber$1security)	(US-PGPUB; USPAT; USOCR; FPRS; EPO; JPO; DERWENT; IBM_TDB)	OR	OFF	OFF	2024/11/30 03:34 PM
L806	0	(predicitve near2 planning)	(US-PGPUB; USPAT; USOCR; FPRS; EPO; JPO; DERWENT; IBM_TDB)	OR	OFF	OFF	2024/11/30 03:34 PM
L807	1293	(predictive near2 planning)	(US-PGPUB; USPAT; USOCR; FPRS; EPO; JPO; DERWENT; IBM_TDB)	OR	OFF	OFF	2024/11/30 03:34 PM
L808	24	L321 and (cyber$1security)	(US-PGPUB; USPAT; USOCR; FPRS; EPO; JPO; DERWENT; IBM_TDB)	OR	OFF	OFF	2024/11/30 03:34 PM
L809	22	L322 AND ((G06Q30/0202 OR G06Q40/04 OR G06Q10/0637 OR G06Q10/067 OR G06Q30/0201 OR	(US-PGPUB; USPAT; USOCR; FPRS; EPO; JPO; DERWENT; IBM_TDB)	OR	OFF	OFF	2024/11/30 03:34 PM

		G06Q30/0205 OR G06Q40/06 OR G06Q40/08 OR G06N5/04 OR G06N7/005 OR G06N99/005 OR H04L63/1425 OR H04L63/1441).CPC.)					
L810	9988	726/2.ccls.	(US-PGPUB; USPAT; USOCR; FPRS; EPO; JPO; DERWENT; IBM_TDB)	OR	OFF	OFF	2024/11/30 03:34 PM
L811	3429	726/21.ccls.	(US-PGPUB; USPAT; USOCR; FPRS; EPO; JPO; DERWENT; IBM_TDB)	OR	OFF	OFF	2024/11/30 03:34 PM
L812	389	726/36.ccls.	(US-PGPUB; USPAT; USOCR; FPRS; EPO; JPO; DERWENT; IBM_TDB)	OR	OFF	OFF	2024/11/30 03:34 PM
L813	5930	713/150.ccls.	(US-PGPUB; USPAT; USOCR; FPRS; EPO; JPO; DERWENT; IBM_TDB)	OR	OFF	OFF	2024/11/30 03:34 PM
L814	1147	713/163.ccls.	(US-PGPUB; USPAT; USOCR; FPRS; EPO; JPO; DERWENT; IBM_TDB)	OR	OFF	OFF	2024/11/30 03:34 PM
L815	2183	713/181.ccls.	(US-PGPUB; USPAT; USOCR; FPRS; EPO; JPO; DERWENT; IBM_TDB)	OR	OFF	OFF	2024/11/30 03:34 PM
L816	3674	380/255.ccls.	(US-PGPUB; USPAT; USOCR; FPRS; EPO; JPO; DERWENT; IBM_TDB)	OR	OFF	OFF	2024/11/30 03:34 PM
L817	432	380/264.ccls.	(US-PGPUB; USPAT; USOCR; FPRS; EPO; JPO; DERWENT; IBM_TDB)	OR	OFF	OFF	2024/11/30 03:34 PM
L818	163	380/276.ccls.	(US-PGPUB; USPAT; USOCR; FPRS; EPO; JPO; DERWENT; IBM_TDB)	OR	OFF	OFF	2024/11/30 03:34 PM
L819	0	L322 and L324	(US-PGPUB; USPAT; USOCR; FPRS; EPO; JPO; DERWENT; IBM_TDB)	OR	OFF	OFF	2024/11/30 03:34 PM
L820	0	L322 and L325	(US-PGPUB; USPAT; USOCR; FPRS; EPO; JPO; DERWENT; IBM_TDB)	OR	OFF	OFF	2024/11/30 03:34 PM
L821	0	L322 and L326	(US-PGPUB; USPAT; USOCR; FPRS; EPO;	OR	OFF	OFF	2024/11/30 03:34 PM

			JPO; DERWENT; IBM_TDB)				
L822	0	L322 and L327	(US-PGPUB; USPAT; USOCR; FPRS; EPO; JPO; DERWENT; IBM_TDB)	OR	OFF	OFF	2024/11/30 03:34 PM
L823	0	L322 and L328	(US-PGPUB; USPAT; USOCR; FPRS; EPO; JPO; DERWENT; IBM_TDB)	OR	OFF	OFF	2024/11/30 03:34 PM
L824	0	L322 and L329	(US-PGPUB; USPAT; USOCR; FPRS; EPO; JPO; DERWENT; IBM_TDB)	OR	OFF	OFF	2024/11/30 03:34 PM
L825	0	L322 and L330	(US-PGPUB; USPAT; USOCR; FPRS; EPO; JPO; DERWENT; IBM_TDB)	OR	OFF	OFF	2024/11/30 03:34 PM
L826	0	L322 and L331	(US-PGPUB; USPAT; USOCR; FPRS; EPO; JPO; DERWENT; IBM_TDB)	OR	OFF	OFF	2024/11/30 03:34 PM
L827	0	L322 and L332	(US-PGPUB; USPAT; USOCR; FPRS; EPO; JPO; DERWENT; IBM_TDB)	OR	OFF	OFF	2024/11/30 03:34 PM
L828	4	("20050000165"|"20140359552"|"20160006629"|"7171515").PN.	(US-PGPUB; USPAT)	OR	OFF	OFF	2024/11/30 03:34 PM
L829	329	"15237625"	(US-PGPUB; USPAT; USOCR; FPRS; EPO; JPO; DERWENT; IBM_TDB)	OR	OFF	OFF	2024/11/30 03:34 PM
L830	28028	726/23	(US-PGPUB; USPAT; USOCR; FPRS; EPO; JPO; DERWENT; IBM_TDB)	OR	OFF	OFF	2024/11/30 03:34 PM
L831	11197	726/23.ccls.	(US-PGPUB; USPAT; USOCR; FPRS; EPO; JPO; DERWENT; IBM_TDB)	OR	OFF	OFF	2024/11/30 03:34 PM
L832	329	"15237625"	(US-PGPUB; USPAT; USOCR; FPRS; EPO; JPO; DERWENT; IBM_TDB)	OR	OFF	OFF	2024/11/30 03:34 PM
L833	525	(jason near2 crabtree).inv.	(US-PGPUB; USPAT; USOCR; FPRS; EPO; JPO; DERWENT; IBM_TDB)	OR	OFF	OFF	2024/11/30 03:34 PM
L834	4	(fractal near2 industries).as.	(US-PGPUB; USPAT; USOCR; FPRS; EPO; JPO; DERWENT; IBM_TDB)	OR	OFF	OFF	2024/11/30 03:34 PM

L835	409	"14925974"	(US-PGPUB; USPAT; USOCR; FPRS; EPO; JPO; DERWENT; IBM_TDB)	OR	OFF	OFF	2024/11/30 03:34 PM
L836	0	("14925974").PN.	(US-PGPUB; USPAT; USOCR; FPRS; EPO; JPO; DERWENT; IBM_TDB)	OR	OFF	OFF	2024/11/30 03:34 PM
L837	0	("15237625").PN.	(US-PGPUB; USPAT; USOCR; FPRS; EPO; JPO; DERWENT; IBM_TDB)	OR	OFF	OFF	2024/11/30 03:34 PM
L838	158	L343 and (time series).clm.	(US-PGPUB; USPAT; USOCR; FPRS; EPO; JPO; DERWENT; IBM_TDB)	OR	OFF	OFF	2024/11/30 03:34 PM
L839	2	((predictive near2 planning) same (real near2 time near2 triage near2 analysis))	(US-PGPUB; USPAT; USOCR; FPRS; EPO; JPO; DERWENT; IBM_TDB)	OR	OFF	OFF	2024/11/30 03:34 PM
L840	6410653	((predictive near2 planning) same (real near2 time) with triage analysis)	(US-PGPUB; USPAT; USOCR; FPRS; EPO; JPO; DERWENT; IBM_TDB)	OR	OFF	OFF	2024/11/30 03:34 PM
L841	2	((predictive near2 planning) same (real near2 time) with triage with analysis)	(US-PGPUB; USPAT; USOCR; FPRS; EPO; JPO; DERWENT; IBM_TDB)	OR	OFF	OFF	2024/11/30 03:34 PM
L842	59	((real near2 time) with triage with analysis)	(US-PGPUB; USPAT; USOCR; FPRS; EPO; JPO; DERWENT; IBM_TDB)	OR	OFF	OFF	2024/11/30 03:34 PM
L843	0	L356 and (predicitve near2 planning)	(US-PGPUB; USPAT; USOCR; FPRS; EPO; JPO; DERWENT; IBM_TDB)	OR	OFF	OFF	2024/11/30 03:34 PM
L844	2	L356 and (cyber near3 attack$5)	(US-PGPUB; USPAT; USOCR; FPRS; EPO; JPO; DERWENT; IBM_TDB)	OR	OFF	OFF	2024/11/30 03:34 PM
L845	6	L356 and (cybersecurity)	(US-PGPUB; USPAT; USOCR; FPRS; EPO; JPO; DERWENT; IBM_TDB)	OR	OFF	OFF	2024/11/30 03:34 PM
L846	6	L356 and (cyber$1security)	(US-PGPUB; USPAT; USOCR; FPRS; EPO; JPO; DERWENT; IBM_TDB)	OR	OFF	OFF	2024/11/30 03:34 PM
L847	0	(predicitve near2 planning)	(US-PGPUB; USPAT; USOCR; FPRS; EPO; JPO; DERWENT; IBM_TDB)	OR	OFF	OFF	2024/11/30 03:34 PM
L848	1293	(predictive near2	(US-PGPUB; USPAT;	OR	OFF	OFF	2024/11/30

		planning)	USOCR; FPRS; EPO; JPO; DERWENT; IBM_TDB)				03:34 PM
L849	24	L362 and (cyber$1security)	(US-PGPUB; USPAT; USOCR; FPRS; EPO; JPO; DERWENT; IBM_TDB)	OR	OFF	OFF	2024/11/30 03:34 PM
L850	22	L363 AND ((G06Q30/0202 OR G06Q40/04 OR G06Q10/0637 OR G06Q10/067 OR G06Q30/0201 OR G06Q30/0205 OR G06Q40/06 OR G06Q40/08 OR G06N5/04 OR G06N7/005 OR G06N99/005 OR H04L63/1425 OR H04L63/1441).CPC.)	(US-PGPUB; USPAT; USOCR; FPRS; EPO; JPO; DERWENT; IBM_TDB)	OR	OFF	OFF	2024/11/30 03:34 PM
L851	9988	726/2.ccls.	(US-PGPUB; USPAT; USOCR; FPRS; EPO; JPO; DERWENT; IBM_TDB)	OR	OFF	OFF	2024/11/30 03:34 PM
L852	3429	726/21.ccls.	(US-PGPUB; USPAT; USOCR; FPRS; EPO; JPO; DERWENT; IBM_TDB)	OR	OFF	OFF	2024/11/30 03:34 PM
L853	389	726/36.ccls.	(US-PGPUB; USPAT; USOCR; FPRS; EPO; JPO; DERWENT; IBM_TDB)	OR	OFF	OFF	2024/11/30 03:34 PM
L854	5930	713/150.ccls.	(US-PGPUB; USPAT; USOCR; FPRS; EPO; JPO; DERWENT; IBM_TDB)	OR	OFF	OFF	2024/11/30 03:34 PM
L855	1147	713/163.ccls.	(US-PGPUB; USPAT; USOCR; FPRS; EPO; JPO; DERWENT; IBM_TDB)	OR	OFF	OFF	2024/11/30 03:34 PM
L856	2183	713/181.ccls.	(US-PGPUB; USPAT; USOCR; FPRS; EPO; JPO; DERWENT; IBM_TDB)	OR	OFF	OFF	2024/11/30 03:34 PM
L857	3674	380/255.ccls.	(US-PGPUB; USPAT; USOCR; FPRS; EPO; JPO; DERWENT; IBM_TDB)	OR	OFF	OFF	2024/11/30 03:34 PM
L858	432	380/264.ccls.	(US-PGPUB; USPAT; USOCR; FPRS; EPO; JPO; DERWENT; IBM_TDB)	OR	OFF	OFF	2024/11/30 03:34 PM
L859	163	380/276.ccls.	(US-PGPUB; USPAT;	OR	OFF	OFF	2024/11/30

			USOCR; FPRS; EPO; JPO; DERWENT; IBM_TDB)				03:34 PM
L860	0	L363 and L365	(US-PGPUB; USPAT; USOCR; FPRS; EPO; JPO; DERWENT; IBM_TDB)	OR	OFF	OFF	2024/11/30 03:34 PM
L861	0	L363 and L366	(US-PGPUB; USPAT; USOCR; FPRS; EPO; JPO; DERWENT; IBM_TDB)	OR	OFF	OFF	2024/11/30 03:34 PM
L862	0	L363 and L367	(US-PGPUB; USPAT; USOCR; FPRS; EPO; JPO; DERWENT; IBM_TDB)	OR	OFF	OFF	2024/11/30 03:34 PM
L863	0	L363 and L368	(US-PGPUB; USPAT; USOCR; FPRS; EPO; JPO; DERWENT; IBM_TDB)	OR	OFF	OFF	2024/11/30 03:34 PM
L864	0	L363 and L369	(US-PGPUB; USPAT; USOCR; FPRS; EPO; JPO; DERWENT; IBM_TDB)	OR	OFF	OFF	2024/11/30 03:34 PM
L865	0	L363 and L370	(US-PGPUB; USPAT; USOCR; FPRS; EPO; JPO; DERWENT; IBM_TDB)	OR	OFF	OFF	2024/11/30 03:34 PM
L866	0	L363 and L371	(US-PGPUB; USPAT; USOCR; FPRS; EPO; JPO; DERWENT; IBM_TDB)	OR	OFF	OFF	2024/11/30 03:34 PM
L867	0	L363 and L372	(US-PGPUB; USPAT; USOCR; FPRS; EPO; JPO; DERWENT; IBM_TDB)	OR	OFF	OFF	2024/11/30 03:34 PM
L868	0	L363 and L373	(US-PGPUB; USPAT; USOCR; FPRS; EPO; JPO; DERWENT; IBM_TDB)	OR	OFF	OFF	2024/11/30 03:34 PM
L869	4	("20050000165"|"20140359552"|"20160006629"|"7171515").PN.	(US-PGPUB; USPAT)	OR	OFF	OFF	2024/11/30 03:34 PM
L870	124	L306 and (time near2 series).clm.	(US-PGPUB; USPAT; USOCR; FPRS; EPO; JPO; DERWENT; IBM_TDB)	OR	OFF	OFF	2024/11/30 03:34 PM
L871	50	L306 and ((time near2 series) with multi$dimensional).clm.	(US-PGPUB; USPAT; USOCR; FPRS; EPO; JPO; DERWENT; IBM_TDB)	OR	OFF	OFF	2024/11/30 03:34 PM
L872	2	("20160275123"|"6256544").PN.	(US-PGPUB; USPAT)	OR	OFF	OFF	2024/11/30 03:34 PM
L873	17	"15790860"	(US-PGPUB; USPAT;	OR	OFF	OFF	2024/11/30

			USOCR; FPRS; EPO; JPO; DERWENT; IBM_TDB)				03:34 PM
L874	28	"20150020199"	(US-PGPUB; USPAT; USOCR; FPRS; EPO; JPO; DERWENT; IBM_TDB)	OR	OFF	OFF	2024/11/30 03:34 PM
L875	28	"20160006629"	(US-PGPUB; USPAT; USOCR; FPRS; EPO; JPO; DERWENT; IBM_TDB)	OR	OFF	OFF	2024/11/30 03:34 PM
L876	40	"20140359552"	(US-PGPUB; USPAT; USOCR; FPRS; EPO; JPO; DERWENT; IBM_TDB)	OR	OFF	OFF	2024/11/30 03:34 PM
L877	7	(US-20160006629-$ or US-20140359552-$ or US-20050000165-$ or US-20160275123-$ or US-20150020199-$).did. or (US-7171515-$ or US-6256544-$).did.	(US-PGPUB; USPAT)	OR	OFF	OFF	2024/11/30 03:34 PM
L878	0	L391 and (network with traffice with monitor$5)	(US-PGPUB; USPAT; USOCR; FPRS; EPO; JPO; DERWENT; IBM_TDB)	OR	OFF	OFF	2024/11/30 03:34 PM
L879	1	L391 and (network with traffic with monitor$5)	(US-PGPUB; USPAT; USOCR; FPRS; EPO; JPO; DERWENT; IBM_TDB)	OR	OFF	OFF	2024/11/30 03:34 PM
L880	1	L391 and (network with traffic with (scan$5 or monitor$5))	(US-PGPUB; USPAT; USOCR; FPRS; EPO; JPO; DERWENT; IBM_TDB)	OR	OFF	OFF	2024/11/30 03:34 PM
L881	1	L391 and (network with (flow$1 or traffic) with (scan$5 or monitor$5))	(US-PGPUB; USPAT; USOCR; FPRS; EPO; JPO; DERWENT; IBM_TDB)	OR	OFF	OFF	2024/11/30 03:34 PM
L882	1	L391 and (network near3 (scan$5 or monitor$5))	(US-PGPUB; USPAT; USOCR; FPRS; EPO; JPO; DERWENT; IBM_TDB)	OR	OFF	OFF	2024/11/30 03:34 PM
L883	5	L391 and (baseline$1 or threshold$1 or limit$1)	(US-PGPUB; USPAT; USOCR; FPRS; EPO; JPO; DERWENT; IBM_TDB)	OR	OFF	OFF	2024/11/30 03:34 PM
L884	1	L391 and (score$1)	(US-PGPUB; USPAT; USOCR; FPRS; EPO; JPO; DERWENT; IBM_TDB)	OR	OFF	OFF	2024/11/30 03:34 PM
L885	75	"20130117852"	(US-PGPUB; USPAT; USOCR; FPRS; EPO; JPO; DERWENT; IBM_TDB)	OR	OFF	OFF	2024/11/30 03:34 PM

L886	33	"20070226796"	(US-PGPUB; USPAT; USOCR; FPRS; EPO; JPO; DERWENT; IBM_TDB)	OR	OFF	OFF	2024/11/30 03:34 PM
L887	18	(US-20160006629-$ or US-20140359552-$ or US-20050000165-$ or US-20160275123-$ or US-20150020199-$ or US-20130117852-$ or US-20070226796-$).did. or (US-7171515-$ or US-6256544-$).did. or (US-20070226796-$).did.	(US-PGPUB; USPAT; DERWENT)	OR	OFF	OFF	2024/11/30 03:34 PM
L888	3	L401 and (score$1)	(US-PGPUB; USPAT; USOCR; FPRS; EPO; JPO; DERWENT; IBM_TDB)	OR	OFF	OFF	2024/11/30 03:34 PM
L889	424641	(network near3 (monitor$5 or scan$5))	(US-PGPUB; USPAT; USOCR; FPRS; EPO; JPO; DERWENT; IBM_TDB)	OR	OFF	OFF	2024/11/30 03:34 PM
L890	424641	(network near3 (monitor$5 or scan$5))	(US-PGPUB; USPAT; USOCR; FPRS; EPO; JPO; DERWENT; IBM_TDB)	OR	OFF	OFF	2024/11/30 03:34 PM
L891	1583	L404 and (score with access$6 with (resource$1 or content or application$1 or program$1))	(US-PGPUB; USPAT; USOCR; FPRS; EPO; JPO; DERWENT; IBM_TDB)	OR	OFF	OFF	2024/11/30 03:34 PM
L892	338	L405 and @ad<"20151028"	(US-PGPUB; USPAT; USOCR; FPRS; EPO; JPO; DERWENT; IBM_TDB)	OR	OFF	OFF	2024/11/30 03:34 PM
L893	10	L406 and (score with (security or threat) with level$1 with (resource$1 or content or application$1 or program$1))	(US-PGPUB; USPAT; USOCR; FPRS; EPO; JPO; DERWENT; IBM_TDB)	OR	OFF	OFF	2024/11/30 03:34 PM
L894	0	L407 and (score$1 with connection)	(US-PGPUB; USPAT; USOCR; FPRS; EPO; JPO; DERWENT; IBM_TDB)	OR	OFF	OFF	2024/11/30 03:34 PM
L895	2	L407 and (score$1 with media)	(US-PGPUB; USPAT; USOCR; FPRS; EPO; JPO; DERWENT; IBM_TDB)	OR	OFF	OFF	2024/11/30 03:34 PM
L896	20	(US-20160006629-$ or US-20140359552-$ or US-20050000165-$ or US-20160275123-$ or	(US-PGPUB; USPAT; DERWENT)	OR	OFF	OFF	2024/11/30 03:34 PM

		US-20150020199-$ or US-20130117852-$ or US-20070226796-$ or US-20130111592-$).did. or (US-7171515-$ or US-6256544-$).did. or (US-20070226796-$).did.					
L897	0	L410 and (score$1 with (verification or authentication))	(US-PGPUB; USPAT; USOCR; FPRS; EPO; JPO; DERWENT; IBM_TDB)	OR	OFF	OFF	2024/11/30 03:34 PM
L898	0	L410 and (score$1 same (verification or authentication))	(US-PGPUB; USPAT; USOCR; FPRS; EPO; JPO; DERWENT; IBM_TDB)	OR	OFF	OFF	2024/11/30 03:34 PM
L899	4	L410 and ((verification or authentication))	(US-PGPUB; USPAT; USOCR; FPRS; EPO; JPO; DERWENT; IBM_TDB)	OR	OFF	OFF	2024/11/30 03:34 PM
L900	14	L410 and (access$4 or permission$1)	(US-PGPUB; USPAT; USOCR; FPRS; EPO; JPO; DERWENT; IBM_TDB)	OR	OFF	OFF	2024/11/30 03:34 PM
L901	17	"15790860"	(US-PGPUB; USPAT; USOCR; FPRS; EPO; JPO; DERWENT; IBM_TDB)	OR	OFF	OFF	2024/11/30 03:34 PM
L902	28028	726/23	(US-PGPUB; USPAT; USOCR; FPRS; EPO; JPO; DERWENT; IBM_TDB)	OR	OFF	OFF	2024/11/30 03:34 PM
L903	11197	726/23.ccls.	(US-PGPUB; USPAT; USOCR; FPRS; EPO; JPO; DERWENT; IBM_TDB)	OR	OFF	OFF	2024/11/30 03:34 PM
L904	329	"15237625"	(US-PGPUB; USPAT; USOCR; FPRS; EPO; JPO; DERWENT; IBM_TDB)	OR	OFF	OFF	2024/11/30 03:34 PM
L905	525	(jason near2 crabtree).inv.	(US-PGPUB; USPAT; USOCR; FPRS; EPO; JPO; DERWENT; IBM_TDB)	OR	OFF	OFF	2024/11/30 03:34 PM
L906	4	(fractal near2 industries).as.	(US-PGPUB; USPAT; USOCR; FPRS; EPO; JPO; DERWENT; IBM_TDB)	OR	OFF	OFF	2024/11/30 03:34 PM
L907	409	"14925974"	(US-PGPUB; USPAT; USOCR; FPRS; EPO; JPO; DERWENT; IBM_TDB)	OR	OFF	OFF	2024/11/30 03:34 PM
L908	0	("14925974").PN.	(US-PGPUB; USPAT; USOCR; FPRS; EPO;	OR	OFF	OFF	2024/11/30 03:34 PM

			JPO; DERWENT; IBM_TDB)				
L909	0	("15237625").PN.	(US-PGPUB; USPAT; USOCR; FPRS; EPO; JPO; DERWENT; IBM_TDB)	OR	OFF	OFF	2024/11/30 03:34 PM
L910	2	((predictive near2 planning) same (real near2 time near2 triage near2 analysis))	(US-PGPUB; USPAT; USOCR; FPRS; EPO; JPO; DERWENT; IBM_TDB)	OR	OFF	OFF	2024/11/30 03:34 PM
L911	6410653	((predictive near2 planning) same (real near2 time) with triage analysis)	(US-PGPUB; USPAT; USOCR; FPRS; EPO; JPO; DERWENT; IBM_TDB)	OR	OFF	OFF	2024/11/30 03:34 PM
L912	2	((predictive near2 planning) same (real near2 time) with triage with analysis)	(US-PGPUB; USPAT; USOCR; FPRS; EPO; JPO; DERWENT; IBM_TDB)	OR	OFF	OFF	2024/11/30 03:34 PM
L913	59	((real near2 time) with triage with analysis)	(US-PGPUB; USPAT; USOCR; FPRS; EPO; JPO; DERWENT; IBM_TDB)	OR	OFF	OFF	2024/11/30 03:34 PM
L914	0	L233 and (predicitve near2 planning)	(US-PGPUB; USPAT; USOCR; FPRS; EPO; JPO; DERWENT; IBM_TDB)	OR	OFF	OFF	2024/11/30 03:34 PM
L915	2	L233 and (cyber near3 attack$5)	(US-PGPUB; USPAT; USOCR; FPRS; EPO; JPO; DERWENT; IBM_TDB)	OR	OFF	OFF	2024/11/30 03:34 PM
L916	6	L233 and (cybersecurity)	(US-PGPUB; USPAT; USOCR; FPRS; EPO; JPO; DERWENT; IBM_TDB)	OR	OFF	OFF	2024/11/30 03:34 PM
L917	0	(predicitve near2 planning)	(US-PGPUB; USPAT; USOCR; FPRS; EPO; JPO; DERWENT; IBM_TDB)	OR	OFF	OFF	2024/11/30 03:34 PM
L918	1293	(predictive near2 planning)	(US-PGPUB; USPAT; USOCR; FPRS; EPO; JPO; DERWENT; IBM_TDB)	OR	OFF	OFF	2024/11/30 03:34 PM
L919	24	L239 and (cyber$1security)	(US-PGPUB; USPAT; USOCR; FPRS; EPO; JPO; DERWENT; IBM_TDB)	OR	OFF	OFF	2024/11/30 03:34 PM
L920	22	L240 AND ((G06Q30/0202 OR G06Q40/04 OR G06Q10/0637 OR G06Q10/067 OR G06Q30/0201 OR G06Q30/0205 OR G06Q40/06 OR	(US-PGPUB; USPAT; USOCR; FPRS; EPO; JPO; DERWENT; IBM_TDB)	OR	OFF	OFF	2024/11/30 03:34 PM

		G06Q40/08 OR G06N5/04 OR G06N7/005 OR G06N99/005 OR H04L63/1425 OR H04L63/1441).CPC.)					
L921	9988	726/2.ccls.	(US-PGPUB; USPAT; USOCR; FPRS; EPO; JPO; DERWENT; IBM_TDB)	OR	OFF	OFF	2024/11/30 03:34 PM
L922	3429	726/21.ccls.	(US-PGPUB; USPAT; USOCR; FPRS; EPO; JPO; DERWENT; IBM_TDB)	OR	OFF	OFF	2024/11/30 03:34 PM
L923	389	726/36.ccls.	(US-PGPUB; USPAT; USOCR; FPRS; EPO; JPO; DERWENT; IBM_TDB)	OR	OFF	OFF	2024/11/30 03:34 PM
L924	5930	713/150.ccls.	(US-PGPUB; USPAT; USOCR; FPRS; EPO; JPO; DERWENT; IBM_TDB)	OR	OFF	OFF	2024/11/30 03:34 PM
L925	1147	713/163.ccls.	(US-PGPUB; USPAT; USOCR; FPRS; EPO; JPO; DERWENT; IBM_TDB)	OR	OFF	OFF	2024/11/30 03:34 PM
L926	2183	713/181.ccls.	(US-PGPUB; USPAT; USOCR; FPRS; EPO; JPO; DERWENT; IBM_TDB)	OR	OFF	OFF	2024/11/30 03:34 PM
L927	3674	380/255.ccls.	(US-PGPUB; USPAT; USOCR; FPRS; EPO; JPO; DERWENT; IBM_TDB)	OR	OFF	OFF	2024/11/30 03:34 PM
L928	432	380/264.ccls.	(US-PGPUB; USPAT; USOCR; FPRS; EPO; JPO; DERWENT; IBM_TDB)	OR	OFF	OFF	2024/11/30 03:34 PM
L929	163	380/276.ccls.	(US-PGPUB; USPAT; USOCR; FPRS; EPO; JPO; DERWENT; IBM_TDB)	OR	OFF	OFF	2024/11/30 03:34 PM
L930	0	L240 and L242	(US-PGPUB; USPAT; USOCR; FPRS; EPO; JPO; DERWENT; IBM_TDB)	OR	OFF	OFF	2024/11/30 03:34 PM
L931	0	L240 and L243	(US-PGPUB; USPAT; USOCR; FPRS; EPO; JPO; DERWENT; IBM_TDB)	OR	OFF	OFF	2024/11/30 03:34 PM
L932	0	L240 and L244	(US-PGPUB; USPAT; USOCR; FPRS; EPO; JPO; DERWENT; IBM_TDB)	OR	OFF	OFF	2024/11/30 03:34 PM

L933	0	L240 and L245	(US-PGPUB; USPAT; USOCR; FPRS; EPO; JPO; DERWENT; IBM_TDB)	OR	OFF	OFF	2024/11/30 03:34 PM
L934	0	L240 and L246	(US-PGPUB; USPAT; USOCR; FPRS; EPO; JPO; DERWENT; IBM_TDB)	OR	OFF	OFF	2024/11/30 03:34 PM
L935	0	L240 and L247	(US-PGPUB; USPAT; USOCR; FPRS; EPO; JPO; DERWENT; IBM_TDB)	OR	OFF	OFF	2024/11/30 03:34 PM
L936	0	L240 and L248	(US-PGPUB; USPAT; USOCR; FPRS; EPO; JPO; DERWENT; IBM_TDB)	OR	OFF	OFF	2024/11/30 03:34 PM
L937	0	L240 and L249	(US-PGPUB; USPAT; USOCR; FPRS; EPO; JPO; DERWENT; IBM_TDB)	OR	OFF	OFF	2024/11/30 03:34 PM
L938	0	L240 and L250	(US-PGPUB; USPAT; USOCR; FPRS; EPO; JPO; DERWENT; IBM_TDB)	OR	OFF	OFF	2024/11/30 03:34 PM
L939	28028	726/23	(US-PGPUB; USPAT; USOCR; FPRS; EPO; JPO; DERWENT; IBM_TDB)	OR	OFF	OFF	2024/11/30 03:34 PM
L940	11197	726/23.ccls.	(US-PGPUB; USPAT; USOCR; FPRS; EPO; JPO; DERWENT; IBM_TDB)	OR	OFF	OFF	2024/11/30 03:34 PM
L941	329	"15237625"	(US-PGPUB; USPAT; USOCR; FPRS; EPO; JPO; DERWENT; IBM_TDB)	OR	OFF	OFF	2024/11/30 03:34 PM
L942	525	(jason near2 crabtree).inv.	(US-PGPUB; USPAT; USOCR; FPRS; EPO; JPO; DERWENT; IBM_TDB)	OR	OFF	OFF	2024/11/30 03:34 PM
L943	4	(fractal near2 industries).as.	(US-PGPUB; USPAT; USOCR; FPRS; EPO; JPO; DERWENT; IBM_TDB)	OR	OFF	OFF	2024/11/30 03:34 PM
L944	409	"14925974"	(US-PGPUB; USPAT; USOCR; FPRS; EPO; JPO; DERWENT; IBM_TDB)	OR	OFF	OFF	2024/11/30 03:34 PM
L945	0	("14925974").PN.	(US-PGPUB; USPAT; USOCR; FPRS; EPO; JPO; DERWENT; IBM_TDB)	OR	OFF	OFF	2024/11/30 03:34 PM
L946	0	("15237625").PN.	(US-PGPUB; USPAT;	OR	OFF	OFF	2024/11/30

			USOCR; FPRS; EPO; JPO; DERWENT; IBM_TDB)				03:34 PM
L947	2	((predictive near2 planning) same (real near2 time near2 triage near2 analysis))	(US-PGPUB; USPAT; USOCR; FPRS; EPO; JPO; DERWENT; IBM_TDB)	OR	OFF	OFF	2024/11/30 03:34 PM
L948	6410653	((predictive near2 planning) same (real near2 time) with triage analysis)	(US-PGPUB; USPAT; USOCR; FPRS; EPO; JPO; DERWENT; IBM_TDB)	OR	OFF	OFF	2024/11/30 03:34 PM
L949	2	((predictive near2 planning) same (real near2 time) with triage with analysis)	(US-PGPUB; USPAT; USOCR; FPRS; EPO; JPO; DERWENT; IBM_TDB)	OR	OFF	OFF	2024/11/30 03:34 PM
L950	59	((real near2 time) with triage with analysis)	(US-PGPUB; USPAT; USOCR; FPRS; EPO; JPO; DERWENT; IBM_TDB)	OR	OFF	OFF	2024/11/30 03:34 PM
L951	0	L274 and (predicitve near2 planning)	(US-PGPUB; USPAT; USOCR; FPRS; EPO; JPO; DERWENT; IBM_TDB)	OR	OFF	OFF	2024/11/30 03:34 PM
L952	2	L274 and (cyber near3 attack$5)	(US-PGPUB; USPAT; USOCR; FPRS; EPO; JPO; DERWENT; IBM_TDB)	OR	OFF	OFF	2024/11/30 03:34 PM
L953	6	L274 and (cybersecurity)	(US-PGPUB; USPAT; USOCR; FPRS; EPO; JPO; DERWENT; IBM_TDB)	OR	OFF	OFF	2024/11/30 03:34 PM
L954	0	(predicitve near2 planning)	(US-PGPUB; USPAT; USOCR; FPRS; EPO; JPO; DERWENT; IBM_TDB)	OR	OFF	OFF	2024/11/30 03:34 PM
L955	1293	(predictive near2 planning)	(US-PGPUB; USPAT; USOCR; FPRS; EPO; JPO; DERWENT; IBM_TDB)	OR	OFF	OFF	2024/11/30 03:34 PM
L956	24	L280 and (cyber$1security)	(US-PGPUB; USPAT; USOCR; FPRS; EPO; JPO; DERWENT; IBM_TDB)	OR	OFF	OFF	2024/11/30 03:34 PM
L957	22	L281 AND ((G06Q30/0202 OR G06Q40/04 OR G06Q10/0637 OR G06Q10/067 OR G06Q30/0201 OR G06Q30/0205 OR G06Q40/06 OR G06Q40/08 OR G06N5/04 OR G06N7/005 OR	(US-PGPUB; USPAT; USOCR; FPRS; EPO; JPO; DERWENT; IBM_TDB)	OR	OFF	OFF	2024/11/30 03:34 PM

		G06N99/005 OR H04L63/1425 OR H04L63/1441).CPC.)					
L958	9988	726/2.ccls.	(US-PGPUB; USPAT; USOCR; FPRS; EPO; JPO; DERWENT; IBM_TDB)	OR	OFF	OFF	2024/11/30 03:34 PM
L959	3429	726/21.ccls.	(US-PGPUB; USPAT; USOCR; FPRS; EPO; JPO; DERWENT; IBM_TDB)	OR	OFF	OFF	2024/11/30 03:34 PM
L960	389	726/36.ccls.	(US-PGPUB; USPAT; USOCR; FPRS; EPO; JPO; DERWENT; IBM_TDB)	OR	OFF	OFF	2024/11/30 03:34 PM
L961	5930	713/150.ccls.	(US-PGPUB; USPAT; USOCR; FPRS; EPO; JPO; DERWENT; IBM_TDB)	OR	OFF	OFF	2024/11/30 03:34 PM
L962	1147	713/163.ccls.	(US-PGPUB; USPAT; USOCR; FPRS; EPO; JPO; DERWENT; IBM_TDB)	OR	OFF	OFF	2024/11/30 03:34 PM
L963	2183	713/181.ccls.	(US-PGPUB; USPAT; USOCR; FPRS; EPO; JPO; DERWENT; IBM_TDB)	OR	OFF	OFF	2024/11/30 03:34 PM
L964	3674	380/255.ccls.	(US-PGPUB; USPAT; USOCR; FPRS; EPO; JPO; DERWENT; IBM_TDB)	OR	OFF	OFF	2024/11/30 03:34 PM
L965	432	380/264.ccls.	(US-PGPUB; USPAT; USOCR; FPRS; EPO; JPO; DERWENT; IBM_TDB)	OR	OFF	OFF	2024/11/30 03:34 PM
L966	163	380/276.ccls.	(US-PGPUB; USPAT; USOCR; FPRS; EPO; JPO; DERWENT; IBM_TDB)	OR	OFF	OFF	2024/11/30 03:34 PM
L967	0	L281 and L283	(US-PGPUB; USPAT; USOCR; FPRS; EPO; JPO; DERWENT; IBM_TDB)	OR	OFF	OFF	2024/11/30 03:34 PM
L968	0	L281 and L284	(US-PGPUB; USPAT; USOCR; FPRS; EPO; JPO; DERWENT; IBM_TDB)	OR	OFF	OFF	2024/11/30 03:34 PM
L969	0	L281 and L285	(US-PGPUB; USPAT; USOCR; FPRS; EPO; JPO; DERWENT; IBM_TDB)	OR	OFF	OFF	2024/11/30 03:34 PM
L970	0	L281 and L286	(US-PGPUB; USPAT; USOCR; FPRS; EPO;	OR	OFF	OFF	2024/11/30 03:34 PM

			JPO; DERWENT; IBM_TDB)				
L971	0	L281 and L287	(US-PGPUB; USPAT; USOCR; FPRS; EPO; JPO; DERWENT; IBM_TDB)	OR	OFF	OFF	2024/11/30 03:34 PM
L972	0	L281 and L288	(US-PGPUB; USPAT; USOCR; FPRS; EPO; JPO; DERWENT; IBM_TDB)	OR	OFF	OFF	2024/11/30 03:34 PM
L973	0	L281 and L289	(US-PGPUB; USPAT; USOCR; FPRS; EPO; JPO; DERWENT; IBM_TDB)	OR	OFF	OFF	2024/11/30 03:34 PM
L974	0	L281 and L290	(US-PGPUB; USPAT; USOCR; FPRS; EPO; JPO; DERWENT; IBM_TDB)	OR	OFF	OFF	2024/11/30 03:34 PM
L975	0	L281 and L291	(US-PGPUB; USPAT; USOCR; FPRS; EPO; JPO; DERWENT; IBM_TDB)	OR	OFF	OFF	2024/11/30 03:34 PM
L976	28028	726/23	(US-PGPUB; USPAT; USOCR; FPRS; EPO; JPO; DERWENT; IBM_TDB)	OR	OFF	OFF	2024/11/30 03:34 PM
L977	11197	726/23.ccls.	(US-PGPUB; USPAT; USOCR; FPRS; EPO; JPO; DERWENT; IBM_TDB)	OR	OFF	OFF	2024/11/30 03:34 PM
L978	329	"15237625"	(US-PGPUB; USPAT; USOCR; FPRS; EPO; JPO; DERWENT; IBM_TDB)	OR	OFF	OFF	2024/11/30 03:34 PM
L979	525	(jason near2 crabtree).inv.	(US-PGPUB; USPAT; USOCR; FPRS; EPO; JPO; DERWENT; IBM_TDB)	OR	OFF	OFF	2024/11/30 03:34 PM
L980	4	(fractal near2 industries).as.	(US-PGPUB; USPAT; USOCR; FPRS; EPO; JPO; DERWENT; IBM_TDB)	OR	OFF	OFF	2024/11/30 03:34 PM
L981	409	"14925974"	(US-PGPUB; USPAT; USOCR; FPRS; EPO; JPO; DERWENT; IBM_TDB)	OR	OFF	OFF	2024/11/30 03:34 PM
L982	0	("14925974").PN.	(US-PGPUB; USPAT; USOCR; FPRS; EPO; JPO; DERWENT; IBM_TDB)	OR	OFF	OFF	2024/11/30 03:34 PM
L983	0	("15237625").PN.	(US-PGPUB; USPAT; USOCR; FPRS; EPO; JPO; DERWENT;	OR	OFF	OFF	2024/11/30 03:34 PM

			IBM_TDB)				
L984	2	((predictive near2 planning) same (real near2 time near2 triage near2 analysis))	(US-PGPUB; USPAT; USOCR; FPRS; EPO; JPO; DERWENT; IBM_TDB)	OR	OFF	OFF	2024/11/30 03:34 PM
L985	0	"18885474"	(US-PGPUB; USPAT; EPO)	OR	ON	ON	2024/11/30 03:34 PM
L986	424	(jason near2 crabtree).inv.	(US-PGPUB; USPAT; EPO)	OR	ON	ON	2024/11/30 03:34 PM
L987	45	L500 AND (receive near2 request$1).clm.	(US-PGPUB; USPAT; EPO)	OR	ON	ON	2024/11/30 03:34 PM
L988	42	L501 AND (time near2 series)	(US-PGPUB; USPAT; EPO)	OR	ON	ON	2024/11/30 03:34 PM
L989	17	L501 AND (time near2 series).clm.	(US-PGPUB; USPAT; EPO)	OR	ON	ON	2024/11/30 03:34 PM
L990	0	L500 AND (additional near2 verification).clm.	(US-PGPUB; USPAT; EPO)	OR	ON	ON	2024/11/30 03:34 PM
L991	19	L500 AND (historical).clm.	(US-PGPUB; USPAT; EPO)	OR	ON	ON	2024/11/30 03:34 PM
L992	4	L505 AND (authenticat$6).clm.	(US-PGPUB; USPAT; EPO)	OR	ON	ON	2024/11/30 03:34 PM
L993	2	"17106479"	(US-PGPUB; USPAT; EPO)	OR	ON	ON	2024/11/30 03:34 PM
L994	44	("10044726" OR "10191768" OR "10210246" OR "10216485" OR "10270748" OR "10333992" OR "10643144" OR "10846391" OR "20050165822" OR "20110307467" OR "20140324521" OR "20150319156" OR "20160006629" OR "20160012235" OR "20170090893" OR "20180082304" OR "6477572" OR "6857073" OR "7139747" OR "7227948" OR "7310632" OR "7322044" OR "7530105" OR "7546333" OR "7685296" OR "7818224" OR "7818417" OR "7925561" OR "8069190" OR "8346753" OR "8457996" OR	(US-PGPUB; USPAT)	OR	ON	ON	2024/11/30 03:34 PM

		"8751867" OR "8832840" OR "8949960" OR "9069976" OR "9110706" OR "9152727" OR "9256735" OR "9400962" OR "9466041" OR "9558220" OR "9560065" OR "9652538" OR "9774522").pn.					
L995	22	L281 AND ((G06Q30/0202 OR G06Q40/04 OR G06Q10/0637 OR G06Q10/067 OR G06Q30/0201 OR G06Q30/0205 OR G06Q40/06 OR G06Q40/08 OR G06N5/04 OR G06N7/005 OR G06N99/005 OR H04L63/1425 OR H04L63/1441 OR H04L63/0861).CPC.)	(US-PGPUB; USPAT; USOCR; FPRS; EPO; JPO; DERWENT; IBM_TDB)	OR	OFF	OFF	2024/11/30 03:34 PM
L996	44	("10044726" OR "10191768" OR "10210246" OR "10216485" OR "10270748" OR "10333992" OR "10643144" OR "10846391" OR "20050165822" OR "20110307467" OR "20140324521" OR "20150319156" OR "20160006629" OR "20160012235" OR "20170090893" OR "20180082304" OR "6477572" OR "6857073" OR "7139747" OR "7227948" OR "7310632" OR "7322044" OR "7530105" OR "7546333" OR "7685296" OR "7818224" OR "7818417" OR "7925561" OR "8069190" OR	(US-PGPUB; USPAT)	OR	ON	ON	2024/11/30 03:34 PM

		"8346753" OR "8457996" OR "8751867" OR "8832840" OR "8949960" OR "9069976" OR "9110706" OR "9152727" OR "9256735" OR "9400962" OR "9466041" OR "9558220" OR "9560065" OR "9652538" OR "9774522").pn.					

PE2E SEARCH - Search History (Interference)

Ref #	Hits	Search Query	DBs	Default Operator	Plurals	British Equivalents	Time Stamp
N42	5257	(time near2 series near2 data).clm.	(US-PGPUB; USPAT)	OR	OFF	OFF	2018/11/26 02:35 PM
N43	12	N42 and (computational near2 graph$1).clm.	(US-PGPUB; USPAT)	OR	OFF	OFF	2018/11/26 02:36 PM
N44	0	N43 and (real$time).clm.	(US-PGPUB; USPAT)	OR	OFF	OFF	2018/11/26 02:37 PM
N45	62	N42 and (network near2 traffic).clm.	(US-PGPUB; USPAT)	OR	OFF	OFF	2018/11/26 02:38 PM
N46	10	N45 and pattern.clm.	(US-PGPUB; USPAT)	OR	OFF	OFF	2018/11/26 02:38 PM
N47	14	N45 and pattern$1.clm.	(US-PGPUB; USPAT)	OR	OFF	OFF	2018/11/26 02:38 PM
N89	5390	(time near2 series near2 data).clm.	(US-PGPUB; USPAT)	OR	OFF	OFF	2019/01/31 01:59 PM
N90	12	N89 and (computational near2 graph$1).clm.	(US-PGPUB; USPAT)	OR	OFF	OFF	2019/01/31 01:59 PM
N91	0	N90 and (real$time).clm.	(US-PGPUB; USPAT)	OR	OFF	OFF	2019/01/31 01:59 PM
N92	66	N89 and (network near2 traffic).clm.	(US-PGPUB; USPAT)	OR	OFF	OFF	2019/01/31 01:59 PM
N93	11	N92 and pattern.clm.	(US-PGPUB; USPAT)	OR	OFF	OFF	2019/01/31 01:59 PM
N94	15	N92 and pattern$1.clm.	(US-PGPUB; USPAT)	OR	OFF	OFF	2019/01/31 01:59 PM
N197	5699	(time near2 series near2 data).clm.	(US-PGPUB; USPAT)	OR	OFF	OFF	2019/06/21 11:40 PM
N198	13	N197 and (computational near2 graph$1).clm.	(US-PGPUB; USPAT)	OR	OFF	OFF	2019/06/21 11:40 PM
N199	1	N198 and (real$time).clm.	(US-PGPUB; USPAT)	OR	OFF	OFF	2019/06/21 11:40 PM
N200	73	N197 and (network	(US-PGPUB; USPAT)	OR	OFF	OFF	2019/06/21

		near2 traffic).clm.					11:40 PM
N201	12	N200 and pattern.clm.	(US-PGPUB; USPAT)	OR	OFF	OFF	2019/06/21 11:40 PM
N202	17	N200 and pattern$1.clm.	(US-PGPUB; USPAT)	OR	OFF	OFF	2019/06/21 11:40 PM
N203	5699	(time near2 series near2 data).clm.	(US-PGPUB; USPAT)	OR	OFF	OFF	2019/06/21 11:40 PM
N204	13	N203 and (computational near2 graph$1).clm.	(US-PGPUB; USPAT)	OR	OFF	OFF	2019/06/21 11:40 PM
N205	1	N204 and (real$time).clm.	(US-PGPUB; USPAT)	OR	OFF	OFF	2019/06/21 11:40 PM
N206	73	N203 and (network near2 traffic).clm.	(US-PGPUB; USPAT)	OR	OFF	OFF	2019/06/21 11:40 PM
N207	12	N206 and pattern.clm.	(US-PGPUB; USPAT)	OR	OFF	OFF	2019/06/21 11:40 PM
N208	17	N206 and pattern$1.clm.	(US-PGPUB; USPAT)	OR	OFF	OFF	2019/06/21 11:40 PM
N499	6443	(time near2 series near2 data).clm.	(US-PGPUB; USPAT)	OR	OFF	OFF	2020/03/31 02:28 PM
N500	19	N499 and (computational near2 graph$1).clm.	(US-PGPUB; USPAT)	OR	OFF	OFF	2020/03/31 02:28 PM
N501	1	N500 and (real$time).clm.	(US-PGPUB; USPAT)	OR	OFF	OFF	2020/03/31 02:28 PM
N502	83	N499 and (network near2 traffic).clm.	(US-PGPUB; USPAT)	OR	OFF	OFF	2020/03/31 02:28 PM
N503	12	N502 and pattern.clm.	(US-PGPUB; USPAT)	OR	OFF	OFF	2020/03/31 02:28 PM
N504	18	N502 and pattern$1.clm.	(US-PGPUB; USPAT)	OR	OFF	OFF	2020/03/31 02:28 PM
N505	6443	(time near2 series near2 data).clm.	(US-PGPUB; USPAT)	OR	OFF	OFF	2020/03/31 02:29 PM
N506	19	N505 and (computational near2 graph$1).clm.	(US-PGPUB; USPAT)	OR	OFF	OFF	2020/03/31 02:29 PM
N507	1	N506 and (real$time).clm.	(US-PGPUB; USPAT)	OR	OFF	OFF	2020/03/31 02:29 PM
N508	83	N505 and (network near2 traffic).clm.	(US-PGPUB; USPAT)	OR	OFF	OFF	2020/03/31 02:29 PM
N509	12	N508 and pattern.clm.	(US-PGPUB; USPAT)	OR	OFF	OFF	2020/03/31 02:29 PM
N510	18	N508 and pattern$1.clm.	(US-PGPUB; USPAT)	OR	OFF	OFF	2020/03/31 02:29 PM
N511	6443	(time near2 series near2 data).clm.	(US-PGPUB; USPAT)	OR	OFF	OFF	2020/03/31 02:31 PM
N512	19	N511 and (computational near2 graph$1).clm.	(US-PGPUB; USPAT)	OR	OFF	OFF	2020/03/31 02:31 PM
N513	1	N512 and	(US-PGPUB; USPAT)	OR	OFF	OFF	2020/03/31

		(real$time).clm.					02:31 PM
N514	83	N511 and (network near2 traffic).clm.	(US-PGPUB; USPAT)	OR	OFF	OFF	2020/03/31 02:31 PM
N515	12	N514 and pattern.clm.	(US-PGPUB; USPAT)	OR	OFF	OFF	2020/03/31 02:31 PM
N516	18	N514 and pattern$1.clm.	(US-PGPUB; USPAT)	OR	OFF	OFF	2020/03/31 02:31 PM
N517	6443	(time near2 series near2 data).clm.	(US-PGPUB; USPAT)	OR	OFF	OFF	2020/03/31 02:31 PM
N518	19	N517 and (computational near2 graph$1).clm.	(US-PGPUB; USPAT)	OR	OFF	OFF	2020/03/31 02:31 PM
N519	1	N518 and (real$time).clm.	(US-PGPUB; USPAT)	OR	OFF	OFF	2020/03/31 02:31 PM
N520	83	N517 and (network near2 traffic).clm.	(US-PGPUB; USPAT)	OR	OFF	OFF	2020/03/31 02:31 PM
N521	12	N520 and pattern.clm.	(US-PGPUB; USPAT)	OR	OFF	OFF	2020/03/31 02:31 PM
N522	18	N520 and pattern$1.clm.	(US-PGPUB; USPAT)	OR	OFF	OFF	2020/03/31 02:31 PM
N523	6443	(time near2 series near2 data).clm.	(US-PGPUB; USPAT)	OR	OFF	OFF	2020/03/31 02:40 PM
N524	19	N499 and (computational near2 graph$1).clm.	(US-PGPUB; USPAT)	OR	OFF	OFF	2020/03/31 02:40 PM
N525	1	N500 and (real$time).clm.	(US-PGPUB; USPAT)	OR	OFF	OFF	2020/03/31 02:40 PM
N526	83	N499 and (network near2 traffic).clm.	(US-PGPUB; USPAT)	OR	OFF	OFF	2020/03/31 02:40 PM
N527	12	N502 and pattern.clm.	(US-PGPUB; USPAT)	OR	OFF	OFF	2020/03/31 02:40 PM
N528	18	N502 and pattern$1.clm.	(US-PGPUB; USPAT)	OR	OFF	OFF	2020/03/31 02:40 PM
N529	6443	(time near2 series near2 data).clm.	(US-PGPUB; USPAT)	OR	OFF	OFF	2020/03/31 02:40 PM
N530	19	N505 and (computational near2 graph$1).clm.	(US-PGPUB; USPAT)	OR	OFF	OFF	2020/03/31 02:40 PM
N531	1	N506 and (real$time).clm.	(US-PGPUB; USPAT)	OR	OFF	OFF	2020/03/31 02:40 PM
N532	83	N505 and (network near2 traffic).clm.	(US-PGPUB; USPAT)	OR	OFF	OFF	2020/03/31 02:40 PM
N533	12	N508 and pattern.clm.	(US-PGPUB; USPAT)	OR	OFF	OFF	2020/03/31 02:40 PM
N534	18	N508 and pattern$1.clm.	(US-PGPUB; USPAT)	OR	OFF	OFF	2020/03/31 02:40 PM

Patents

CONTEXTUAL AND RISK-BASED MULTI-FACTOR AUTHENTICATION

(CONTEXTUAL AND RISK-BASED MULTI-FACTOR AUTHENTICATION);

About 82,737 results

Download · Side-by-si

Sort by · Relevance · Group by · None · Deduplicate by · Family · Results / page · 10

Security policy manager to configure permissions on computing devices

EP US · US20200285761A1 · Brian James Buck · Lookout, Inc.
Priority 2019-03-07 · Filed 2019-03-07 · Published 2020-09-10
15 . The system of claim 14 , wherein the instructions are further configured to instruct the at least one processor to: determine a change of **context** for the user device; and in response to determining the change of **context**, revoke the permission for the software on the user device. 16 . The system ...

Multi-factor authentication

WO US GB · US20190123904A1 · Karl Ackerman · Sophos Limited
Priority 2016-06-30 · Filed 2018-12-18 · Published 2019-04-25
18 . A security appliance for providing a **multi-factor authentication** verification method based on a secure heartbeat from and endpoint, the security appliance comprising: a network interface configured to couple the security appliance in a communicating relationship with a data network; a memory;

Methods of Dynamically Securing Electronic Devices and Other Communications ...

WO US GA · US20200151349A1 · Steven Cavanaugh · Internet Infrastructure Services Corp.
Priority 2013-10-24 · Filed 2020-01-10 · Published 2020-05-14
Existing systems do not leverage the increased computational power of the modern devices or use methods of onboard sensor data capture and analysis to produce a **contextual** awareness of the user, device and assigned security policies. The need for a near real time **contextual** system with predictive ...

Communicating with client device to determine security risk in allowing access ...

US · US11818192B2 · Rade Zerad · Lookout, Inc.
Priority 2019-03-07 · Filed 2020-06-05 · Granted 2023-11-14 · Published 2023-11-14
, wherein the determination of the first security state includes transmitting a request for a first **context** to the client device. 3. The method of claim 2 , further comprising receiving the first **context** from the client device, the first **context** representing information related to the security of the ...

Quarantine of software based on analysis of updated device data

US · US11301156B2 · Timothy Michael Wyatt · Lookout, Inc.
Priority 2019-03-07 · Filed 2019-03-07 · Granted 2022-04-12 · Published 2022-04-12
... . 7. The method of claim 1 , wherein the message to the second computing device includes at least one of an identifier of a source of the first security threat, an assessment of the first security threat, a **context** for the first security threat, or a recommended response. 8. The method of claim 1 , ...

Securing out-of-band messages

US CN · US8447787B2 · Johannes Klein · Microsoft Corporation
Priority 2010-02-09 · Filed 2010-02-09 · Granted 2013-05-21 · Published 2013-05-21
Similar ... , mobile telephones, network PCs, minicomputers, mainframe computers, distributed computing environments that include any of the above systems or devices, and the like. Embodiments of the disclosure may be described in the general **context** of computer-executable instructions, such as program modules,

Distributed denial of service attack protection for internet of things devices

US · US10382488B2 · K Thumalaiswar Reddy · Cisco Technology, Inc.
Priority 2016-10-13 · Filed 2016-10-13 · Granted 2019-08-13 · Published 2019-08-13
Similar DOTS supplements calls for help with pertinent details about the detected attack, allowing those appropriate entities participating in DOTS to form ad hoc, adaptive alliances against DDoS attacks. The embodiments described herein are explained in the **context** of DOTS. However, those skilled in the ...

Protection against phishing of two-factor authentication credentials

US · US20210053388A1 · Bjorn Markus Jakobsson · Rightquestion, Llc
Priority 2018-08-08 · Filed 2020-10-19 · Published 2021-02-25
50, no. 10, pp. 94-100, 2007; and Cisco, "Email Attacks: This Time It's Personal") that the success rate of deceptive emails can be increased from single-digit percentages to more than 70% by using **contextual** information for targeting. In terms of the initial compromise, it is noteworthy that the ...

Distributing security codes through a restricted communications channel

US • US10129240B2 • Manjunath Bhat • Airwatch Llc

Priority 2015-06-18 • Filed 2017-11-06 • Granted 2018-11-13 • Published 2018-11-13

Similar ... data store 121 includes, for example, compliance rules 130 , device data 133 , and potentially other data. Within the context of an enterprise, compliance rules 130 include one or more rules that, when violated, can cause the management service 112 to issue a management command. Compliance rules 130

Use of device risk evaluation to manage access to services

WO EP US R. • US10218697B2 • Aaron Cockerill • Lookout, Inc.

Priority 2017-06-09 • Filed 2017-06-09 • Granted 2019-02-26 • Published 2019-02-26

performing the evaluation comprises determining an authenticity of the application; and performing the evaluation further comprises assessing a context of a user of the first computing device, the context comprising at least one of: a location of the first computing device, a device location for a ...

Next > >> About 82,737 results

Top 1000 results by filing date

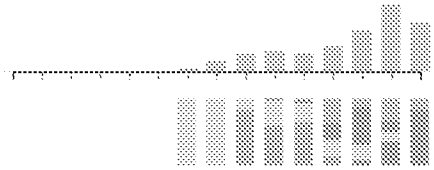

Relative count of top 5 values

Assignees	Inventors	CPCs
Research In Motion Limited		1
[redacted]		1
International Business Machines Corporation		
Oracle International Corporation		0
Citrix Systems, Inc.		0

Expand

Related landscapes

Engineering & Computer Science

Computer Security & Cryptography

Computer Networks & Wireless Communication

About Send Feedback Public Datasets Terms Privacy Policy Help

UNITED STATES PATENT AND TRADEMARK OFFICE

UNITED STATES DEPARTMENT OF COMMERCE
United States Patent and Trademark Office
Address: COMMISSIONER FOR PATENTS
P.O. Box 1450
Alexandria, Virginia 22313-1450
www.uspto.gov

NOTICE OF ALLOWANCE AND FEE(S) DUE

82318 7590 12/11/2024
Brian Galvin
Galvin Patent Law LLC
2916 NW Bucklin Hill Road
Suite 485
Silverdale, WA 98383

EXAMINER
ULLAH, SHARIF E

ART UNIT	PAPER NUMBER
2495	

DATE MAILED: 12/11/2024

APPLICATION NO.	FILING DATE	FIRST NAMED INVENTOR	ATTORNEY DOCKET NO.	CONFIRMATION NO.
18/885,510	09/13/2024	Jason Crabtree	15387FT	5139

TITLE OF INVENTION: CONTEXTUAL AND RISK-BASED MULTI-FACTOR AUTHENTICATION

APPLN. TYPE	ENTITY STATUS	ISSUE FEE DUE	PUBLICATION FEE DUE	PREV. PAID ISSUE FEE	TOTAL FEE(S) DUE	DATE DUE
nonprovisional	UNDISCOUNTED	$1200	$0.00	$0.00	$1200	03/11/2025

THE APPLICATION IDENTIFIED ABOVE HAS BEEN EXAMINED AND IS ALLOWED FOR ISSUANCE AS A PATENT. PROSECUTION ON THE MERITS IS CLOSED. THIS NOTICE OF ALLOWANCE IS NOT A GRANT OF PATENT RIGHTS. THIS APPLICATION IS SUBJECT TO WITHDRAWAL FROM ISSUE AT THE INITIATIVE OF THE OFFICE OR UPON PETITION BY THE APPLICANT. SEE 37 CFR 1.313 AND MPEP 1308.

THE ISSUE FEE AND PUBLICATION FEE (IF REQUIRED) MUST BE PAID WITHIN THREE MONTHS FROM THE MAILING DATE OF THIS NOTICE OR THIS APPLICATION SHALL BE REGARDED AS ABANDONED. THIS STATUTORY PERIOD CANNOT BE EXTENDED. SEE 35 U.S.C. 151. THE ISSUE FEE DUE INDICATED ABOVE DOES NOT REFLECT A CREDIT FOR ANY PREVIOUSLY PAID ISSUE FEE IN THIS APPLICATION. IF AN ISSUE FEE HAS PREVIOUSLY BEEN PAID IN THIS APPLICATION (AS SHOWN ABOVE), THE RETURN OF PART B OF THIS FORM WILL BE CONSIDERED A REQUEST TO REAPPLY THE PREVIOUSLY PAID ISSUE FEE TOWARD THE ISSUE FEE NOW DUE.

HOW TO REPLY TO THIS NOTICE:

I. Review the ENTITY STATUS shown above. If the ENTITY STATUS is shown as SMALL or MICRO, verify whether entitlement to that entity status still applies.

If the ENTITY STATUS is the same as shown above, pay the TOTAL FEE(S) DUE shown above.

If the ENTITY STATUS is changed from that shown above, on PART B - FEE(S) TRANSMITTAL, complete section number 5 titled "Change in Entity Status (from status indicated above)".

For purposes of this notice, small entity fees are 40% the amount of undiscounted fees, and micro entity fees are 20% the amount of undiscounted fees.

II. PART B - FEE(S) TRANSMITTAL, or its equivalent, must be completed and returned to the United States Patent and Trademark Office (USPTO) with your ISSUE FEE and PUBLICATION FEE (if required). If you are charging the fee(s) to your deposit account, section "4b" of Part B - Fee(s) Transmittal should be completed. If an equivalent of Part B is filed, a request to reapply a previously paid issue fee must be clearly made, and delays in processing may occur due to the difficulty in recognizing the paper as an equivalent of Part B.

III. All communications regarding this application must give the application number. Please direct all communications prior to issuance to Mail Stop ISSUE FEE unless advised to the contrary.

IMPORTANT REMINDER: Maintenance fees are due in utility patents issuing on applications filed on or after Dec. 12, 1980. It is patentee's responsibility to ensure timely payment of maintenance fees when due. More information is available at www.uspto.gov/PatentMaintenanceFees.

PART B - FEE(S) TRANSMITTAL

Complete and send this form, together with applicable fee(s), by mail or fax, or via the USPTO patent electronic filing system.

By mail, send to: Mail Stop ISSUE FEE
Commissioner for Patents
P.O. Box 1450
Alexandria, Virginia 22313-1450

By fax, send to: (571)-273-2885

INSTRUCTIONS: This form should be used for transmitting the ISSUE FEE and PUBLICATION FEE (if required). Blocks 1 through 5 should be completed where appropriate. All further correspondence will be mailed to the current correspondence address as indicated unless corrected below or directed otherwise in Block 1, by (a) specifying a new correspondence address; and/or (b) indicating a separate "FEE ADDRESS" for maintenance fee notifications. **Because electronic patent issuance may occur shortly after issue fee payment, any desired continuing application should preferably be filed prior to payment of this issue fee in order not to jeopardize copendency.**

CURRENT CORRESPONDENCE ADDRESS (Note: Use Block 1 for any change of address)

82318 7590 12/11/2024

Brian Galvin
Galvin Patent Law LLC
2916 NW Bucklin Hill Road
Suite 485
Silverdale, WA 98383

Note: A certificate of mailing can only be used for domestic mailings of the Fee(s) Transmittal. This certificate cannot be used for any other accompanying papers. Each additional paper, such as an assignment or formal drawing, must have its own certificate of mailing or transmission.

Certificate of Mailing or Transmission

I hereby certify that this Fee(s) Transmittal is being deposited with the United States Postal Service with sufficient postage for first class mail in an envelope addressed to the Mail Stop ISSUE FEE address above, or being transmitted to the USPTO via the USPTO patent electronic filing system or by facsimile to (571) 273-2885, on the date below.

(Typed or printed name)
(Signature)
(Date)

APPLICATION NO.	FILING DATE	FIRST NAMED INVENTOR	ATTORNEY DOCKET NO.	CONFIRMATION NO.
18/885,510	09/13/2024	Jason Crabtree	15387FT	5139

TITLE OF INVENTION: CONTEXTUAL AND RISK-BASED MULTI-FACTOR AUTHENTICATION

APPLN. TYPE	ENTITY STATUS	ISSUE FEE DUE	PUBLICATION FEE DUE	PREV. PAID ISSUE FEE	TOTAL FEE(S) DUE	DATE DUE
nonprovisional	UNDISCOUNTED	$1200	$0.00	$0.00	$1200	03/11/2025

EXAMINER	ART UNIT	CLASS-SUBCLASS
ULLAH, SHARIF E	2495	726-007000

1. Change of correspondence address or indication of "Fee Address" (37 CFR 1.363).

❑ Change of correspondence address (or Change of Correspondence Address form PTO/AIA/122 or PTO/SB/122) attached.

❑ "Fee Address" indication (or "Fee Address" Indication form PTO/AIA/47 or PTO/SB/47; Rev 03-02 or more recent) attached. **Use of a Customer Number is required.**

2. For printing on the patent front page, list
(1) The names of up to 3 registered patent attorneys or agents OR, alternatively,
(2) The name of a single firm (having as a member a registered attorney or agent) and the names of up to 2 registered patent attorneys or agents. If no name is listed, no name will be printed.

1_____
2_____
3_____

3. ASSIGNEE NAME AND RESIDENCE DATA TO BE PRINTED ON THE PATENT (print or type)

PLEASE NOTE: Unless an assignee is identified below, no assignee data will appear on the patent. If an assignee is identified below, the document must have been previously recorded, or filed for recordation, as set forth in 37 CFR 3.11 and 37 CFR 3.81(a). Completion of this form is NOT a substitute for filing an assignment.

(A) NAME OF ASSIGNEE (B) RESIDENCE: (CITY and STATE OR COUNTRY)

Please check the appropriate assignee category or categories (will not be printed on the patent) : ❑ Individual ❑ Corporation or other private group entity ❑ Government

4a. Fees submitted: ❑Issue Fee ❑Publication Fee (if required)

4b. Method of Payment: *(Please first reapply any previously paid fee shown above)*

❑ Electronic Payment via the USPTO patent electronic filing system ❑ Enclosed check ❑ Non-electronic payment by credit card (Attach form PTO-2038)

❑ The Director is hereby authorized to charge the required fee(s), any deficiency, or credit any overpayment to Deposit Account No. _____

5. **Change in Entity Status** (from status indicated above)

❑ Applicant certifying micro entity status. See 37 CFR 1.29

NOTE: Absent a valid certification of Micro Entity Status (see forms PTO/SB/15A and 15B), issue fee payment in the micro entity amount will not be accepted at the risk of application abandonment.

❑ Applicant asserting small entity status. See 37 CFR 1.27

NOTE: If the application was previously under micro entity status, checking this box will be taken to be a notification of loss of entitlement to micro entity status.

❑ Applicant changing to regular undiscounted fee status.

NOTE: Checking this box will be taken to be a notification of loss of entitlement to small or micro entity status, as applicable.

NOTE: This form must be signed in accordance with 37 CFR 1.31 and 1.33. See 37 CFR 1.4 for signature requirements and certifications.

Authorized Signature _____ Date _____

Typed or printed name _____ Registration No. _____

UNITED STATES DEPARTMENT OF COMMERCE
United States Patent and Trademark Office
Address: COMMISSIONER FOR PATENTS
P.O. Box 1450
Alexandria, Virginia 22313-1450
www.uspto.gov

APPLICATION NO.	FILING DATE	FIRST NAMED INVENTOR	ATTORNEY DOCKET NO.	CONFIRMATION NO.
18/885,510	09/13/2024	Jason Crabtree	15387FT	5139

82318 7590 12/11/2024

Brian Galvin
Galvin Patent Law LLC
2916 NW Bucklin Hill Road
Suite 485
Silverdale, WA 98383

EXAMINER
ULLAH, SHARIF E

ART UNIT	PAPER NUMBER
2495	

DATE MAILED: 12/11/2024

Determination of Patent Term Adjustment under 35 U.S.C. 154 (b)
(Applications filed on or after May 29, 2000)

The Office has discontinued providing a Patent Term Adjustment (PTA) calculation with the Notice of Allowance.

Section 1(h)(2) of the AIA Technical Corrections Act amended 35 U.S.C. 154(b)(3)(B)(i) to eliminate the requirement that the Office provide a patent term adjustment determination with the notice of allowance. See Revisions to Patent Term Adjustment, 78 Fed. Reg. 19416, 19417 (Apr. 1, 2013). Therefore, the Office is no longer providing an initial patent term adjustment determination with the notice of allowance. The Office will continue to provide a patent term adjustment determination with the Issue Notification Letter that is mailed to applicant approximately three weeks prior to the issue date of the patent, and will include the patent term adjustment on the patent. Any request for reconsideration of the patent term adjustment determination (or reinstatement of patent term adjustment) should follow the process outlined in 37 CFR 1.705.

Any questions regarding the Patent Term Extension or Adjustment determination should be directed to the Office of Patent Legal Administration at (571)-272-7702. Questions relating to issue and publication fee payments should be directed to the Customer Service Center of the Office of Patent Publication at 1-(888)-786-0101 or (571)-272-4200.

OMB Clearance and PRA Burden Statement for PTOL-85 Part B

The Paperwork Reduction Act (PRA) of 1995 requires Federal agencies to obtain Office of Management and Budget approval before requesting most types of information from the public. When OMB approves an agency request to collect information from the public, OMB (i) provides a valid OMB Control Number and expiration date for the agency to display on the instrument that will be used to collect the information and (ii) requires the agency to inform the public about the OMB Control Number's legal significance in accordance with 5 CFR 1320.5(b).

The information collected by PTOL-85 Part B is required by 37 CFR 1.311. The information is required to obtain or retain a benefit by the public which is to file (and by the USPTO to process) an application. Confidentiality is governed by 35 U.S.C. 122 and 37 CFR 1.14. This collection is estimated to take 30 minutes to complete, including gathering, preparing, and submitting the completed application form to the USPTO. Time will vary depending upon the individual case. Any comments on the amount of time you require to complete this form and/or suggestions for reducing this burden, should be sent to the Chief Information Officer, U.S. Patent and Trademark Office, U.S. Department of Commerce, P.O. Box 1450, Alexandria, Virginia 22313-1450. DO NOT SEND FEES OR COMPLETED FORMS TO THIS ADDRESS. SEND TO: Commissioner for Patents, P.O. Box 1450, Alexandria, Virginia 22313-1450. Under the Paperwork Reduction Act of 1995, no persons are required to respond to a collection of information unless it displays a valid OMB control number.

Privacy Act Statement

The Privacy Act of 1974 (P.L. 93-579) requires that you be given certain information in connection with your submission of the attached form related to a patent application or patent. The United States Patent and Trademark Office (USPTO) collects the information in this record under authority of 35 U.S.C. 2. The USPTO's system of records is used to manage all applicant and owner information including name, citizenship, residence, post office address, and other information with respect to inventors and their legal representatives pertaining to the applicant's/owner's activities in connection with the invention for which a patent is sought or has been granted. The applicable Privacy Act System of Records Notice for the information collected in this form is COMMERCE/PAT-TM-7 Patent Application Files, available in the Federal Register at 78 FR 19243 (March 29, 2013).
https://www.govinfo.gov/content/pkg/FR-2013-03-29/pdf/2013-07341.pdf

Routine uses of the information in this record may include disclosure to:

1) law enforcement, in the event that the system of records indicates a violation or potential violation of law;
2) a federal, state, local, or international agency, in response to its request;
3) a contractor of the USPTO having need for the information in order to perform a contract;
4) the Department of Justice for determination of whether the Freedom of Information Act (FOIA) requires disclosure of the record;
5) a Member of Congress submitting a request involving an individual to whom the record pertains, when the individual has requested the Member's assistance with respect to the subject matter of the record;
6) a court, magistrate, or administrative tribunal, in the course of presenting evidence, including disclosures to opposing counsel in the course of settlement negotiations;
7) the Administrator, General Services Administration (GSA), or their designee, during an inspection of records conducted by GSA under authority of 44 U.S.C. 2904 and 2906, in accordance with the GSA regulations and any other relevant (i.e., GSA or Commerce) directive, where such disclosure shall not be used to make determinations about individuals;
8) another federal agency for purposes of National Security review (35 U.S.C. 181) and for review pursuant to the Atomic Energy Act (42 U.S.C. 218(c));
9) the Office of Personnel Management (OPM) for personnel research purposes; and
10) the Office of Management and Budget (OMB) for legislative coordination and clearance.

If you do not furnish the information requested on this form, the USPTO may not be able to process and/or examine your submission, which may result in termination of proceedings, abandonment of the application, and/or expiration of the patent.

Notice of Allowability	Application No. 18/885,510	Applicant(s) Crabtree et al.	
	Examiner SHARIF E ULLAH	Art Unit 2495	AIA (FITF) Status Yes

-- The MAILING DATE of this communication appears on the cover sheet with the correspondence address--

All claims being allowable, PROSECUTION ON THE MERITS IS (OR REMAINS) CLOSED in this application. If not included herewith (or previously mailed), a Notice of Allowance (PTOL-85) or other appropriate communication will be mailed in due course. **THIS NOTICE OF ALLOWABILITY IS NOT A GRANT OF PATENT RIGHTS.** This application is subject to withdrawal from issue at the initiative of the Office or upon petition by the applicant. See 37 CFR 1.313 and MPEP 1308.

1. ☑ This communication is responsive to 11/19/2024.
   ☐ A declaration(s)/affidavit(s) under **37 CFR 1.130(b)** was/were filed on _____.

2. ☐ An election was made by the applicant in response to a restriction requirement set forth during the interview on _____; the restriction requirement and election have been incorporated into this action.

3. ☑ The allowed claim(s) is/are 1-30 . As a result of the allowed claim(s), you may be eligible to benefit from the **Patent Prosecution Highway** program at a participating intellectual property office for the corresponding application. For more information, please see **http://www.uspto.gov/patents/init_events/pph/index.jsp** or send an inquiry to **PPHfeedback@uspto.gov.**

4. ☐ Acknowledgment is made of a claim for foreign priority under 35 U.S.C. § 119(a)-(d) or (f).

   Certified copies:

   a) ☐ All b) ☐ Some* c) ☐ None of the:

   1. ☐ Certified copies of the priority documents have been received.
   2. ☐ Certified copies of the priority documents have been received in Application No. _____ .
   3. ☐ Copies of the certified copies of the priority documents have been received in this national stage application from the International Bureau (PCT Rule 17.2(a)).

   * Certified copies not received: _____ .

Applicant has THREE MONTHS FROM THE "MAILING DATE" of this communication to file a reply complying with the requirements noted below. Failure to timely comply will result in ABANDONMENT of this application.
THIS THREE-MONTH PERIOD IS NOT EXTENDABLE.

5. ☐ CORRECTED DRAWINGS (as "replacement sheets") must be submitted.
   ☐ including changes required by the attached Examiner's Amendment / Comment or in the Office action of Paper No./Mail Date _____ .

   Identifying indicia such as the application number (see 37 CFR 1.84(c)) should be written on the drawings in the front (not the back) of each sheet. Replacement sheet(s) should be labeled as such in the header according to 37 CFR 1.121(d).

6. ☐ DEPOSIT OF and/or INFORMATION about the deposit of BIOLOGICAL MATERIAL must be submitted. Note the attached Examiner's comment regarding REQUIREMENT FOR THE DEPOSIT OF BIOLOGICAL MATERIAL.

Attachment(s)

1. ☑ Notice of References Cited (PTO-892)
2. ☐ Information Disclosure Statements (PTO/SB/08), Paper No./Mail Date _____.
3. ☐ Examiner's Comment Regarding Requirement for Deposit of Biological Material _____.
4. ☐ Interview Summary (PTO-413), Paper No./Mail Date. _____.
5. ☐ Examiner's Amendment/Comment
6. ☑ Examiner's Statement of Reasons for Allowance
7. ☐ Other _____.

/SHARIF E ULLAH/
Primary Examiner, Art Unit 2495

Notice of Pre-AIA or AIA Status

The present application, filed on or after March 16, 2013, is being examined under the first inventor to file provisions of the AIA.

DETAILED ACTION

Notice of Pre-AIA or AIA Status

The present application, filed on or after March 16, 2013, is being examined under the first inventor to file provisions of the AIA.

Allowable Subject Matter

Claims 1-30 are allowed.

Examiner's Statement of Reasons for Allowance

The following is an examiner's statement of reasons for allowance: although the prior art of record (such as Stute US 2013/0117852)) *provide detecting emerging behaviors associated with cyber security attacks, such as advanced persistent threat (APT) attacks, on communications networks. Other embodiments of the present disclosure also generally provide methods of analyzing data that reduce common occurrences of little value and identify those events that accurately indicate a security breach has occurred or will occur. For instance, in an embodiment, the methods of analyzing data comprise methods of analyzing metadata (data about data) such that it may produce more actionable alerts with fewer false positives and fewer false negatives. These methods of analyzing metadata may also reduce the number of total alerts while increasing the relevance of the alerts that are actually released to a security analyst's console…* (Para. 0006)

None of the prior art, alone or in combination, teaches:

"… receive a request to authenticate a client, wherein the request comprises a first identifier and a password, store, in a multidimensional time-series database, information about the request, determine whether the password corresponds to a first user account identified by the first identifier…. additional verification is required to grant access comprises: retrieving, from the multidimensional time-series database, historical information about previous access requests associated with the first user account, and determining, based at least on the historical information, whether the first user account is associated with a previous request to authenticate, wherein the previous request to authenticate comprised a second identifier not associated with the first user account…"

In view of other limitations of claim 1.

Independent Claims 1, 9, 19 & 26 are allowed based on reasons mentioned above in regards to independent claim 1.

Dependent claims are allowed as they depend from an allowable independent claim.

The closest prior are made of record are:

I. Stute (US 2013/0117852) The present invention provides decomposing a plurality of data packets into a plurality of component data types associated with a candidate alert representing a potential security threat in a network. The method may also include retrieving, from a database, a count for each of a plurality of historical data types matching at least a subset of the component data types, each of the counts quantifying an amount of data of a corresponding historical data type previously detected in the network in a given time period. The method may further include calculating a score that

indicates a discrepancy between an amount of data in each of the subset of the component data types and the counts for each corresponding historical data type in the same time period, and handling the candidate alert based upon the score.

II. Neil at al. (US 2015/0020199) The present invention relates to detecting anomalous behavior in a network. Historical parameters of the network are determined in order to determine normal activity levels. A plurality of paths in the network are enumerated as part of a graph representing the network, where each computing system in the network may be a node in the graph and the sequence of connections between two computing systems may be a directed edge in the graph. A statistical model is applied to the plurality of paths in the graph on a sliding window basis to detect anomalous behavior. Data collected by a Unified Host Collection Agent ("UHCA") may also be used to detect anomalous behavior.

III. Zhu et al. (US 2013/0111592) The present invention techniques to receive a list of applications installed on a user device; obtain application profiles that identify risk levels associated with the applications; obtain a user profile that identifies a job level, security risk level, or an access level to confidential information associated with the user of the user device; identify a highest risk level authorized for the user device based on whether the job level is greater than a first threshold, the security risk level is greater than a second threshold, or the access level is greater than a third threshold; determine whether any of the risk levels are greater than the highest risk level; and transmit a notification that one of the applications is to be removed from the user device when one of the risk levels, associated with the one of the applications, is greater than the highest risk level.

Any comments considered necessary by applicant must be submitted no later than the payment of the issue fee and, to avoid processing delays, should preferably accompany the issue fee. Such submissions should be clearly labeled "Comments on Statement of Reasons for Allowance".

Conclusion

Any inquiry concerning this communication or earlier communications from the examiner should be directed to SHARIF E ULLAH whose telephone number is (571)272-5453. The examiner can normally be reached Mon-Fri 7:00-5:30.

Examiner interviews are available via telephone, in-person, and video conferencing using a USPTO supplied web-based collaboration tool. To schedule an interview, applicant is encouraged to use the USPTO Automated Interview Request (AIR) at http://www.uspto.gov/interviewpractice.

If attempts to reach the examiner by telephone are unsuccessful, the examiner's supervisor, Farid Homayounmehr can be reached on 571-272-3739. The fax phone number for the organization where this application or proceeding is assigned is 571-273-8300.

Information regarding the status of published or unpublished applications may be obtained from Patent Center. Unpublished application information in Patent Center is available to registered users. To file and manage patent submissions in Patent Center, visit: https://patentcenter.uspto.gov. Visit https://www.uspto.gov/patents/apply/patent-center for more information about Patent Center and https://www.uspto.gov/patents/docx for information about filing in DOCX format. For additional questions, contact the Electronic Business Center (EBC) at 866-217-9197 (toll-free). If you would like assistance from a USPTO Customer Service Representative, call 800-786-9199 (IN USA OR CANADA) or 571-272-1000.

/SHARIF E ULLAH/
Primary Examiner, Art Unit 2495

UNITED STATES
PATENT AND TRADEMARK OFFICE

P.O. Box 1450
Alexandria, VA 22313 - 1450
www.uspto.gov

ELECTRONIC ACKNOWLEDGEMENT RECEIPT

APPLICATION #	RECEIPT DATE / TIME	ATTORNEY DOCKET #
18/885,510	**12/26/2024 07:07:07 PM Z ET**	**15387FT**

Title of Invention

CONTEXTUAL AND RISK-BASED MULTI-FACTOR AUTHENTICATION

Application Information

APPLICATION TYPE	Utility - Nonprovisional Application under 35 USC 111(a)	PATENT #	-
CONFIRMATION #	5139	FILED BY	Aura Morrey
PATENT CENTER #	68525360	FILING DATE	09/13/2024
CUSTOMER #	82318	FIRST NAMED INVENTOR	Jason Crabtree
CORRESPONDENCE ADDRESS	-	AUTHORIZED BY	Brian Galvin

Documents

TOTAL DOCUMENTS: 1

DOCUMENT	PAGES	DESCRIPTION	SIZE (KB)
241226_15387FT_Issue Fee Payment_AS_FILED.pdf	1	Issue Fee Payment (PTO-85B)	293 KB

Digest

DOCUMENT	MESSAGE DIGEST(SHA-512)
241226_15387FT_Issue Fee Payment_AS_FILED.pdf	A1386FD55D9E371461CC71F0F4FE1AC99BBE1A314ADCEFF2F3C364E3DB18B0585F33184CCDAB25DAA83A2903FBF8B91F3248B3A2060CB6E2DB52469AE9C27AF7

This Acknowledgement Receipt evidences receipt on the noted date by the USPTO of the indicated documents, characterized by the applicant, and including page counts, where applicable. It serves as evidence of receipt similar to a Post Card, as described in MPEP 503.

New Applications Under 35 U.S.C. 111

If a new application is being filed and the application includes the necessary components for filing date (see 37 CFR 1.53(b)-(d) and MPEP 506), a Filing Receipt (37 CFR 1.54) will be issued in due course and the date shown on this Acknowledgement Receipt will establish the filing date of the application

National Stage of an International Application under 35 U.S.C. 371

If a timely submission to enter the national stage of an international application is compliant with the conditions of 35 U.S.C. 371 and other applicable requirements a Form PCT/DO/EO/903 indicating acceptance of the application as a national stage submission under 35 U.S.C. 371 will be issued in addition to the Filing Receipt, in due course.

New International Application Filed with the USPTO as a Receiving Office

If a new international application is being filed and the international application includes the necessary components for an international filing date (see PCT Article 11 and MPEP 1810), a Notification of the International Application Number and of the International Filing Date (Form PCT/RO/105) will be issued in due course, subject to prescriptions concerning national security, and the date shown on this Acknowledgement Receipt will establish the international filing date of the application.

PART B - FEE(S) TRANSMITTAL

Complete and send this form, together with applicable fee(s), by mail or fax, or via the USPTO patent electronic filing system.

By mail, send to: Mail Stop ISSUE FEE
Commissioner for Patents
P.O. Box 1450
Alexandria, Virginia 22313-1450

By fax, send to: (571)-273-2885

INSTRUCTIONS: This form should be used for transmitting the ISSUE FEE and PUBLICATION FEE (if required). Blocks 1 through 5 should be completed where appropriate. All further correspondence will be mailed to the current correspondence address as indicated unless corrected below or directed otherwise in Block 1, by (a) specifying a new correspondence address; and/or (b) indicating a separate "FEE ADDRESS" for maintenance fee notifications. **Because electronic patent issuance may occur shortly after issue fee payment, any desired continuing application should preferably be filed prior to payment of this issue fee in order not to jeopardize copendency.**

CURRENT CORRESPONDENCE ADDRESS (Note: Use Block 1 for any change of address)

82318 7590 12/11/2024

Brian Galvin
Galvin Patent Law LLC
2916 NW Bucklin Hill Road
Suite 485
Silverdale, WA 98383

Note: A certificate of mailing can only be used for domestic mailings of the Fee(s) Transmittal. This certificate cannot be used for any other accompanying papers. Each additional paper, such as an assignment or formal drawing, must have its own certificate of mailing or transmission.

Certificate of Mailing or Transmission

I hereby certify that this Fee(s) Transmittal is being deposited with the United States Postal Service with sufficient postage for first class mail in an envelope addressed to the Mail Stop ISSUE FEE address above, or being transmitted to the USPTO via the USPTO patent electronic filing system or by facsimile to (571) 273-2885, on the date below.

(Typed or printed name)
(Signature)
(Date)

APPLICATION NO.	FILING DATE	FIRST NAMED INVENTOR	ATTORNEY DOCKET NO.	CONFIRMATION NO.
18/885,510	09/13/2024	Jason Crabtree	15387FT	5139

TITLE OF INVENTION: CONTEXTUAL AND RISK-BASED MULTI-FACTOR AUTHENTICATION

APPLN. TYPE	ENTITY STATUS	ISSUE FEE DUE	PUBLICATION FEE DUE	PREV. PAID ISSUE FEE	TOTAL FEE(S) DUE	DATE DUE
nonprovisional	UNDISCOUNTED	$1200	$0.00	$0.00	$1200	03/11/2025

EXAMINER	ART UNIT	CLASS-SUBCLASS
ULLAH, SHARIF E	2495	726-007000

1. Change of correspondence address or indication of "Fee Address" (37 CFR 1.363).

❑ Change of correspondence address (or Change of Correspondence Address form PTO/AIA/122 or PTO/SB/122) attached.

❑ "Fee Address" indication (or "Fee Address" Indication form PTO/AIA/47 or PTO/SB/47; Rev 03-02 or more recent) attached. **Use of a Customer Number is required.**

2. For printing on the patent front page, list
(1) The names of up to 3 registered patent attorneys or agents OR, alternatively,
(2) The name of a single firm (having as a member a registered attorney or agent) and the names of up to 2 registered patent attorneys or agents. If no name is listed, no name will be printed.

1 GALVIN PATENT LAW LLC
2 BRIAN R. GALVIN
3

3. ASSIGNEE NAME AND RESIDENCE DATA TO BE PRINTED ON THE PATENT (print or type)

PLEASE NOTE: Unless an assignee is identified below, no assignee data will appear on the patent. If an assignee is identified below, the document must have been previously recorded, or filed for recordation, as set forth in 37 CFR 3.11 and 37 CFR 3.81(a). Completion of this form is NOT a substitute for filing an assignment.

(A) NAME OF ASSIGNEE: QOMPLX LLC

(B) RESIDENCE: (CITY and STATE OR COUNTRY): Reston, VA

Please check the appropriate assignee category or categories (will not be printed on the patent) : ❑ Individual ☒ Corporation or other private group entity ❑ Government

4a. Fees submitted: ☒ Issue Fee ❑ Publication Fee (if required)

4b. Method of Payment: *(Please first reapply any previously paid fee shown above)*

☒ Electronic Payment via the USPTO patent electronic filing system ❑ Enclosed check ❑ Non-electronic payment by credit card (Attach form PTO-2038)

❑ The Director is hereby authorized to charge the required fee(s), any deficiency, or credit any overpayment to Deposit Account No. _____

5. **Change in Entity Status** (from status indicated above)

❑ Applicant certifying micro entity status. See 37 CFR 1.29

NOTE: Absent a valid certification of Micro Entity Status (see forms PTO/SB/15A and 15B), issue fee payment in the micro entity amount will not be accepted at the risk of application abandonment.

❑ Applicant asserting small entity status. See 37 CFR 1.27

NOTE: If the application was previously under micro entity status, checking this box will be taken to be a notification of loss of entitlement to micro entity status.

❑ Applicant changing to regular undiscounted fee status.

NOTE: Checking this box will be taken to be a notification of loss of entitlement to small or micro entity status, as applicable.

NOTE: This form must be signed in accordance with 37 CFR 1.31 and 1.33. See 37 CFR 1.4 for signature requirements and certifications.

Authorized Signature /BRIAN R. GALVIN/ Date December 26, 2024

Typed or printed name Brian R. Galvin Registration No. 50,966

UNITED STATES
PATENT AND TRADEMARK OFFICE

P.O. Box 1450
Alexandria, VA 22313 - 1450
www.uspto.gov

ELECTRONIC PAYMENT RECEIPT

APPLICATION #	RECEIPT DATE / TIME	ATTORNEY DOCKET #
18/885,510	**12/26/2024 07:07:07 PM Z ET**	**15387FT**

Title of Invention

CONTEXTUAL AND RISK-BASED MULTI-FACTOR AUTHENTICATION

Application Information

APPLICATION TYPE	Utility - Nonprovisional Application under 35 USC 111(a)	PATENT #	-
CONFIRMATION #	5139	FILED BY	Aura Morrey
PATENT CENTER #	68525360	AUTHORIZED BY	Brian Galvin
CUSTOMER #	82318	FILING DATE	09/13/2024
CORRESPONDENCE ADDRESS	-	FIRST NAMED INVENTOR	Jason Crabtree

Payment Information

PAYMENT METHOD	PAYMENT TRANSACTION ID	PAYMENT AUTHORIZED BY
CARD / 1009	**E2024BPJ07588800**	**Aura Morrey**

FEE CODE	DESCRIPTION	ITEM PRICE($)	QUANTITY	ITEM TOTAL($)
1501	UTILITY ISSUE FEE	1200.00	1	1200.00
			TOTAL AMOUNT:	**$1,200.00**

This Acknowledgement Receipt evidences receipt on the noted date by the USPTO of the indicated documents, characterized by the applicant, and including page counts, where applicable. It serves as evidence of receipt similar to a Post Card, as described in MPEP 503.

New Applications Under 35 U.S.C. 111

If a new application is being filed and the application includes the necessary components for filing date (see 37 CFR 1.53(b)-(d) and MPEP 506), a Filing Receipt (37 CFR 1.54) will be issued in due course and the date shown on this Acknowledgement Receipt will establish the filing date of the application

National Stage of an International Application under 35 U.S.C. 371

If a timely submission to enter the national stage of an international application is compliant with the conditions of 35 U.S.C. 371 and other applicable requirements a Form PCT/DO/EO/903 indicating acceptance of the application as a national stage submission under 35 U.S.C. 371 will be issued in addition to the Filing Receipt, in due course.

New International Application Filed with the USPTO as a Receiving Office

If a new international application is being filed and the international application includes the necessary components for an international filing date (see PCT Article 11 and MPEP 1810), a Notification of the International Application Number and of the International Filing Date (Form PCT/RO/105) will be issued in due course, subject to prescriptions concerning national security, and the date shown on this Acknowledgement Receipt will establish the international filing date of the application.

UNITED STATES PATENT AND TRADEMARK OFFICE

UNITED STATES DEPARTMENT OF COMMERCE
United States Patent and Trademark Office
Address: COMMISSIONER FOR PATENTS
P.O. Box 1450
Alexandria, Virginia 22313-1450
www.uspto.gov

APPLICATION NUMBER	FILING OR 371(C) DATE	FIRST NAMED APPLICANT	ATTY. DOCKET NO./TITLE
18/885,510	09/13/2024	Jason Crabtree	15387FT

CONFIRMATION NO. 5139

PUBLICATION NOTICE

OC000000082862093

82318
Brian Galvin
Galvin Patent Law LLC
2916 NW Bucklin Hill Road
Suite 485
Silverdale, WA 98383

Date Mailed: 01/10/2025

Title:CONTEXTUAL AND RISK-BASED MULTI-FACTOR AUTHENTICATION

Publication No.US-2025-0016154-A1
Publication Date:01/09/2025

NOTICE OF PUBLICATION OF APPLICATION

The above-identified application will be electronically published as a patent application publication pursuant to 37 CFR 1.211, et seq. The patent application publication number and publication date are set forth above.

The publication may be viewed using the USPTO's publicly available Searchable Databases via the Patent Public Search tool at www.uspto.gov. The direct link to access the Patent Public Search tool is currently https://ppubs.uspto.gov/pubwebapp/static/pages/ppubsbasic.html.

The publication process established by the Office does not provide for mailing a copy of the publication to applicant. A copy of the publication may be obtained from the Office upon payment of the appropriate fee set forth in 37 CFR 1.19(a)(1). Orders for copies of patent application publications are handled by the USPTO's Public Records Division. The Public Records Division can be reached by telephone at (571) 272-3150 or (800) 972-6382, by facsimile at (571) 273-3250, by mail addressed to the United States Patent and Trademark Office, Public Records Division, Alexandria, VA 22313-1450 or via the Internet.

In addition, information on the status of the application, including the mailing date of Office actions and the dates of receipt of correspondence filed in the Office, may also be accessed via the Internet through Patent Center, the USPTO's electronic patent application filing and management system. The direct link to access this status information is currently https://patentcenter.uspto.gov/. Prior to publication, such status information is confidential and may only be obtained by applicant using the private side of Patent Center.

Further assistance in electronically accessing the publication, or about Patent Center, is available by calling the Patent Electronic Business Center at 1-866-217-9197.

Office of Data Managment, Application Assistance Unit (571) 272-4000, or (571) 272-4200, or 1-888-786-0101

UNITED STATES PATENT AND TRADEMARK OFFICE

UNITED STATES DEPARTMENT OF COMMERCE
United States Patent and Trademark Office
Address: COMMISSIONER FOR PATENTS
P.O. Box 1450
Alexandria, Virginia 22313-1450
www.uspto.gov

APPLICATION NO.	ISSUE DATE	PATENT NO.	ATTORNEY DOCKET NO.	CONFIRMATION NO.
18/885,510	02/18/2025	12231426	15387FT	5139

82318 7590 01/29/2025

Brian Galvin
Galvin Patent Law LLC
2916 NW Bucklin Hill Road
Suite 485
Silverdale, WA 98383

ISSUE NOTIFICATION

The projected patent number and issue date are specified above. The patent will issue electronically. The electronically issued patent is the official patent grant pursuant to 35 U.S.C. § 153. The patent may be accessed on or after the issue date through Patent Center at https://patentcenter.uspto.gov/. The patent will be available in both the public and the private sides of Patent Center. Further assistance in electronically accessing the patent, or about Patent Center, is available by calling the Patent Electronic Business Center at 1-888-217-9197.

The USPTO is implementing electronic patent issuance with a transition period, during which period the USPTO will mail a ceremonial paper copy of the electronic patent grant to the correspondence address of record. Additional copies of the patent (i.e., certified and presentation copies) may be ordered for a fee from the USPTO's Certified Copy Center at https://certifiedcopycenter.uspto.gov/index.html. The Certified Copy Center may be reached at (800)972-6382.

Determination of Patent Term Adjustment under 35 U.S.C. 154 (b)
(application filed on or after May 29, 2000)

The Patent Term Adjustment is 0 day(s). Any patent to issue from the above-identified application will include an indication of the adjustment on the front page.

If a Continued Prosecution Application (CPA) was filed in the above-identified application, the filing date that determines Patent Term Adjustment is the filing date of the most recent CPA.

Applicant will be able to obtain more detailed information by accessing the Patent Center (https://patentcenter.uspto.gov).

Any questions regarding the Patent Term Extension or Adjustment determination should be directed to the Office of Patent Legal Administration at (571)-272-7702. Questions relating to issue and publication fee payments should be directed to the Application Assistance Unit (AAU) of the Office of Patents Stakeholder Experience (OPSE), Stakeholder Support Division (SSD) at (571)-272-4200.

INVENTOR(s) (Please see PATENT CENTER site https://patentcenter.uspto.gov for additional inventors):

Jason Crabtree, Vienna, VA;
Andrew Sellers, Monument, CO;
Ian MacLeod, Arlington, VA;

APPLICANT(s) (Please see PATENT CENTER site https://patentcenter.uspto.gov for additional applicants):

QOMPLX LLC, Reston, VA;

The United States represents the largest, most dynamic marketplace in the world and is an unparalleled location for business investment, innovation, and commercialization of new technologies. The USA offers tremendous resources and advantages for those who invest and manufacture goods here. Through SelectUSA, our nation works to encourage and facilitate business investment. To learn more about why the USA is the best country in the world to develop technology, manufacture products, and grow your business, visit SelectUSA.gov.

UNITED STATES PATENT AND TRADEMARK OFFICE

UNITED STATES DEPARTMENT OF COMMERCE
United States Patent and Trademark Office
Address: COMMISSIONER FOR PATENTS
P.O. Box 1450
Alexandria, Virginia 22313-1450
www.uspto.gov

APPLICATION NO.	FILING DATE	FIRST NAMED INVENTOR	ATTORNEY DOCKET NO.	CONFIRMATION NO.
18/885,510	09/13/2024	Jason Crabtree	15387FT	5139

82318 7590 02/18/2025
Brian Galvin
Galvin Patent Law LLC
2916 NW Bucklin Hill Road
Suite 485
Silverdale, WA 98383

EXAMINER
ULLAH, SHARIF E

ART UNIT	PAPER NUMBER
2495	

NOTIFICATION DATE	DELIVERY MODE
02/18/2025	ELECTRONIC

Please find below and/or attached an Office communication concerning this application or proceeding.

The time period for reply, if any, is set in the attached communication.

Notice of the Office communication was sent electronically on above-indicated "Notification Date" to the following e-mail address(es):

USPTO@GALVINPATENTLAW.COM
eofficeaction@appcoll.com

PTOL-90A (Rev. 04/07)

APPLICATION NO.	ISSUE DATE	PATENT NO.
18/885,510	18-Feb-2025	12231426

Brian Galvin
Galvin Patent Law LLC
2916 NW Bucklin Hill Road
Silverdale, WA 98383

EGRANT NOTIFICATION

Your electronic patent grant (eGrant) is now available, which can be accessed via Patent Center at https://patentcenter.uspto.gov

The electronic patent grant is the official patent grant under 35 U.S.C. 153. For more information, please visit https://www.uspto.gov/electronicgrants