US007058018B1

(12) **United States Patent**
Hasty, Jr. et al.

(10) **Patent No.: US 7,058,018 B1**
(45) **Date of Patent: Jun. 6, 2006**

(54) **SYSTEM AND METHOD FOR USING PER-PACKET RECEIVE SIGNAL STRENGTH INDICATION AND TRANSMIT POWER LEVELS TO COMPUTE PATH LOSS FOR A LINK FOR USE IN LAYER II ROUTING IN A WIRELESS COMMUNICATION NETWORK**

(75) Inventors: **William Vann Hasty, Jr.**, Lake Forest, FL (US); **Peter J. Stanforth**, Winter Springs, FL (US)

(73) Assignee: **MeshNetworks, Inc.**, Maitland, FL (US)

(*) Notice: Subject to any disclaimer, the term of this patent is extended or adjusted under 35 U.S.C. 154(b) by 294 days.

(21) Appl. No.: **10/091,035**

(22) Filed: **Mar. 6, 2002**

(51) **Int. Cl.**
H04B 7/212 (2006.01)
H04Q 7/00 (2006.01)
H04Q 7/20 (2006.01)

(52) **U.S. Cl.** **370/250**; 370/331; 370/349; 455/450

(58) **Field of Classification Search** 370/250, 370/328, 331–337, 252, 445, 447, 448, 461, 370/465, 522, 342–350, 479–503; 455/422, 455/226, 67, 69, 432–455, 515–524; 709/222, 709/250, 253
See application file for complete search history.

(56) **References Cited**

U.S. PATENT DOCUMENTS

4,494,192	A	1/1985	Lew et al.	364/200
4,617,656	A	10/1986	Kobayashi et al.	370/74
4,736,371	A	4/1988	Tejima et al.	370/95
4,742,357	A	5/1988	Rackley	342/457
4,747,130	A	5/1988	Ho	379/269
4,910,521	A	3/1990	Mellon	342/45
5,034,961	A	7/1991	Adams	375/130

(Continued)

FOREIGN PATENT DOCUMENTS

CA 2132180 3/1996

(Continued)

OTHER PUBLICATIONS

Wong et al., "Soft Handoffs in CDMA Mobile Systems", Dec. 1997, IEEE Personal Communications.

(Continued)

Primary Examiner—Man U. Phan
(74) *Attorney, Agent, or Firm*—Randi L. Karpinia; Joseph J. Buczynski

(57) **ABSTRACT**

A system and method for evaluating at least one communication link between a transmitting node and a receiving node in a communications network, such as a wireless ad-hoc communications network in accordance with the 802.11 standard. The system and method perform the operation of assigning respective link quality values to the respective communication links based on a transmit power level (TPL) value at which the respective data packets were transmitted by the transmitting node over the respective links, a received sensitivity (RS) value of the receiving node receiving the data packets, and a receive signal strength indication (RSSI) value provided by the network for each respective link. The system and method can examine a content of a data packet being sent between the two nodes to determine the TPL, and can receive the RSSI value from a physical layer of the communications network. Accordingly, the system and method can determine which link that additional data packets are to be sent by the transmitting node to the receiving node via the communication link based on the link quality values. Specifically, the link having the highest link quality value is selected.

48 Claims, 5 Drawing Sheets

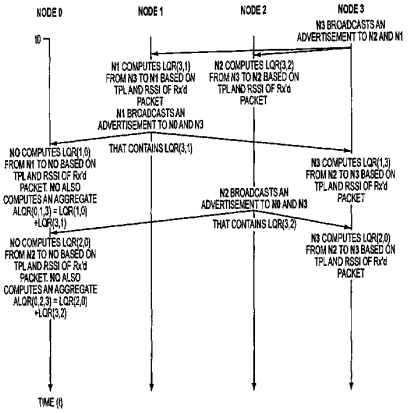

U.S. PATENT DOCUMENTS

5,068,916	A		11/1991	Harrison et al.	455/39
5,231,634	A		7/1993	Giles et al.	370/95.1
5,233,604	A		8/1993	Ahmadi et al.	370/60
5,241,542	A		8/1993	Natarajan et al.	370/95.3
5,317,566	A		5/1994	Joshi	370/60
5,392,450	A		2/1995	Nossen	455/12.1
5,412,654	A	*	5/1995	Perkins	370/312
5,424,747	A		6/1995	Chazelas et al.	342/70
5,491,837	A	*	2/1996	Haartsen	455/62
5,502,722	A		3/1996	Fulghum	370/69.1
5,517,491	A		5/1996	Nanni et al.	370/29
5,555,425	A		9/1996	Zeller et al.	395/800
5,555,540	A		9/1996	Radke	370/16.1
5,572,528	A		11/1996	Shuen	370/85.13
5,615,212	A		3/1997	Ruszczyk et al.	370/433
5,618,045	A		4/1997	Kagan et al.	463/40
5,621,732	A		4/1997	Osawa	370/79
5,623,495	A		4/1997	Eng et al.	370/397
5,627,976	A		5/1997	McFarland et al.	395/308
5,631,897	A		5/1997	Pacheco et al.	370/237
5,644,576	A		7/1997	Bauchot et al.	370/437
5,652,751	A		7/1997	Sharony	370/227
5,680,392	A		10/1997	Semaan	370/261
5,684,794	A		11/1997	Lopez et al.	370/337
5,687,194	A		11/1997	Paneth et al.	375/283
5,696,903	A		12/1997	Mahany	395/200.58
5,697,056	A	*	12/1997	Tayloe	455/513
5,701,294	A		12/1997	Ward et al.	370/252
5,706,428	A		1/1998	Boer et al.	395/200
5,717,689	A		2/1998	Ayanoglu	370/349
5,732,077	A	*	3/1998	Whitehead	370/349
5,745,483	A		4/1998	Nakagawa et al.	370/335
5,768,684	A	*	6/1998	Grubb et al.	455/13.4
5,774,876	A		6/1998	Woolley et al.	705/28
5,781,540	A		7/1998	Malcolm et al.	370/321
5,787,080	A		7/1998	Hulyalkar et al.	370/348
5,794,154	A		8/1998	Bar-On et al.	455/509
5,796,732	A		8/1998	Mazzola et al.	370/362
5,796,741	A		8/1998	Saito et al.	370/439
5,805,593	A		9/1998	Busche	370/396
5,805,842	A		9/1998	Nagaraj et al.	395/306
5,805,977	A		9/1998	Hill et al.	455/31.3
5,809,518	A		9/1998	Lee	711/115
5,822,309	A		10/1998	Ayanoglu et al.	370/315
5,844,905	A		12/1998	McKay et al.	370/443
5,845,097	A		12/1998	Kang et al.	395/297
5,857,084	A		1/1999	Klein	395/309
5,862,345	A	*	1/1999	Okanoue et al.	709/238
5,870,350	A		2/1999	Bertin et al.	365/233
5,877,724	A		3/1999	Davis	342/357
5,881,095	A		3/1999	Cadd	375/202
5,881,372	A		3/1999	Kruys	455/113
5,886,992	A		3/1999	Raatikainen et al.	370/410
5,896,561	A		4/1999	Schrader et al.	455/67.1
5,903,559	A		5/1999	Acharya et al.	370/355
5,909,651	A		6/1999	Chander et al.	455/466
5,936,953	A		8/1999	Simmons	370/364
5,943,322	A		8/1999	Mayor et al.	370/280
5,960,335	A	*	9/1999	Umemoto et al.	455/226
5,987,011	A	*	11/1999	Toh	370/331
5,987,033	A		11/1999	Boer et al.	370/445
5,991,279	A		11/1999	Haugli et al.	370/311
6,021,125	A	*	2/2000	Sakoda et al.	370/345
6,028,853	A		2/2000	Haartsen	370/338
6,029,217	A		2/2000	Arimilli et al.	710/107
6,034,542	A		3/2000	Ridgeway	326/39
6,035,183	A	*	3/2000	Todd et al.	455/226
6,044,062	A		3/2000	Brownrigg et al.	370/238
6,047,330	A		4/2000	Stracke, Jr.	709/238
6,052,594	A		4/2000	Chuang et al.	455/450
6,052,752	A		4/2000	Kwon	710/126
6,058,107	A	*	5/2000	Love et al.	370/332
6,064,626	A		5/2000	Stevens	365/233
6,067,291	A		5/2000	Kamerman et al.	370/338
6,078,566	A		6/2000	Kikinis	370/286
6,104,712	A		8/2000	Robert et al.	370/389
6,108,738	A		8/2000	Chambers et al.	710/113
6,115,580	A		9/2000	Chuprun et al.	455/1
6,122,690	A		9/2000	Nannetti et al.	710/102
6,130,881	A		10/2000	Stiller et al.	370/238
6,132,306	A		10/2000	Trompower	453/11.1
6,137,993	A		10/2000	Almgren et al.	
6,138,024	A	*	10/2000	Evans et al.	455/452
6,147,975	A		11/2000	Bowman-Amuah	370/252
6,157,616	A	*	12/2000	Whitehead	370/252
6,163,699	A		12/2000	Naor et al.	455/453
6,175,745	B1	*	1/2001	Bringby et al.	455/522
6,178,337	B1		1/2001	Spartz et al.	455/561
6,192,053	B1		2/2001	Angelico et al.	370/448
6,192,230	B1		2/2001	van Bokhorst et al.	455/343
6,208,870	B1		3/2001	Lorello et al.	455/466
6,223,240	B1		4/2001	Odenwald et al.	710/129
6,240,294	B1		5/2001	Hamilton et al.	455/456
6,246,875	B1		6/2001	Seazholtz et al.	455/432
6,249,516	B1		6/2001	Brownrigg et al.	370/338
6,275,707	B1		8/2001	Reed et al.	455/456
6,285,892	B1		9/2001	Hulyalkar	455/574
6,304,556	B1		10/2001	Haas	370/254
6,307,843	B1	*	10/2001	Okanoue	370/312
6,327,300	B1		12/2001	Souissi et al.	375/219
6,349,091	B1		2/2002	Li	370/238
6,349,210	B1		2/2002	Li	455/450
6,498,932	B1	*	12/2002	Silventoinen et al.	455/424
6,498,934	B1	*	12/2002	Muller	455/450
6,512,935	B1	*	1/2003	Redi	455/574
6,519,236	B1	*	2/2003	Haartsen et al.	370/332
6,678,252	B1	*	1/2004	Cansever	370/253
6,735,448	B1	*	5/2004	Krishnamurthy et al.	455/522
6,829,226	B1	*	12/2004	Apostolides et al.	370/318
2001/0053699	A1		12/2001	McCrady et al.	455/513
2002/0071395	A1	*	6/2002	Redi et al.	370/252
2004/0059825	A1	*	3/2004	Edwards et al.	709/230

FOREIGN PATENT DOCUMENTS

EP	0513842	A2	11/1992
EP	0627827	A2	12/1994
EP	0924890	A2	6/1999
FR	2683326		7/1993
WO	WO 9608884		3/1996
WO	WO 9724005		7/1997
WO	WO 9839936		9/1998
WO	WO 99123052		3/1999
WO	WO 0034932		6/2000
WO	WO 0110154		2/2001
WO	WO 0133770		5/2001
WO	WO 0135567		5/2001
WO	WO 0137481		5/2001
WO	WO 0137482		5/2001
WO	WO 0137483		5/2001
WO	WO 0235253		5/2002

OTHER PUBLICATIONS

Wong et al., "A Pattern Recognition System for Handoff Algorithms", Jul. 2000, IEEE Journal on Selected Areas in Communications, vol. 18, No. 7.

Andras G. Valko, "Cellular IP: A New Approach to Internet Host Mobility", Jan. 1999, ACM Computer Communication Review.

Richard North, Dale Bryan and Dennis Baker, "Wireless Networked Radios: Comparison of Military, Commercial, and R&D Protocols", Feb. 28-Mar. 3, 1992, 2nd Annual

UCSD Conference on Wireless Communications, San Diego CA.
Benjamin B. Peterson, Chris Kmiecik, Richard Hartnett, Patrick M. Thompson, Jose Mendoza and Hung Nguyen, "Spread Spectrum Indoor Geolocation", Aug. 1998, Navigation: Journal of the Institute of Navigation, vol. 45, No. 2, summer 1998.
Josh Broch, David A. Maltz, David B. Johnson, Yih-Chun Hu and Jorjeta Jetcheva, "A Performance Comparison of Multi-Hop Wireless Ad Hoc Network Routing Protocols", Oct. 25-30, 1998, Proceedings of the 4th Annual ACM/IEEE International Conference on Mobile Computing and Networking.
C. David Young, "USAP: A Unifying Dynamic Distributed Multichannel TDMA Slot Assignment Protocol".
Chip Elliott and Bob Heile, "Self-Organizing, Sef-Healing Wireless Networks", 2000 IEEE.
J.J. Garcia-Luna-Aceves and Asimakis Tzamaloukas, "Reversing the Collision-Avoidance Handshake in Wireless Networks".
J.J. Garcia-Luna-Aceves and Marcelo Spohn, "Transmission-Efficient Routing in Wireless Networks Using Link-State Information".
J.J. Garcia-Luna-Aceves and Ewerton L. Madruga, "The Core-Assisted Mesh Protocol", Aug. 1999, IEEE Journal on Selected Areas in Communications, vol. 17, No. 8.
Ad Kamerman and Guido Aben, "Net Throughput with IEEE 802.11 Wireless LANs".
J.R. McChesney and R.J. Saulitis, "Optimization of an Adaptive Link Control Protocol for Multimedia Packet Radio Networks".
Ram Ramanathan and Regina Rosales-Hain, "Topology Control of Multihop Wireless Networks using Transmit Power Adjustment".
Ram Ramanathan and Martha E. Steenstrup, "Hierarchically-Organized, Multihop Mobile Wireless Networks for Quality-of-Service Support".
Martha E. Steenstrup, "Dynamic Multipoint Virtual Circuits for Multimedia Traffic in Multihop Mobile Wireless Networks".
Zhenyu Tang and J.J. Garcia-Luna-Aceves, "Collision-Avoidance Transmission Scheduling for Ad-Hoc Networks".
George Vardakas and Wendell Kishaba, "QoS Networking With Adaptive Link Control and Tactical Multi-Channel Software Radios".

* cited by examiner

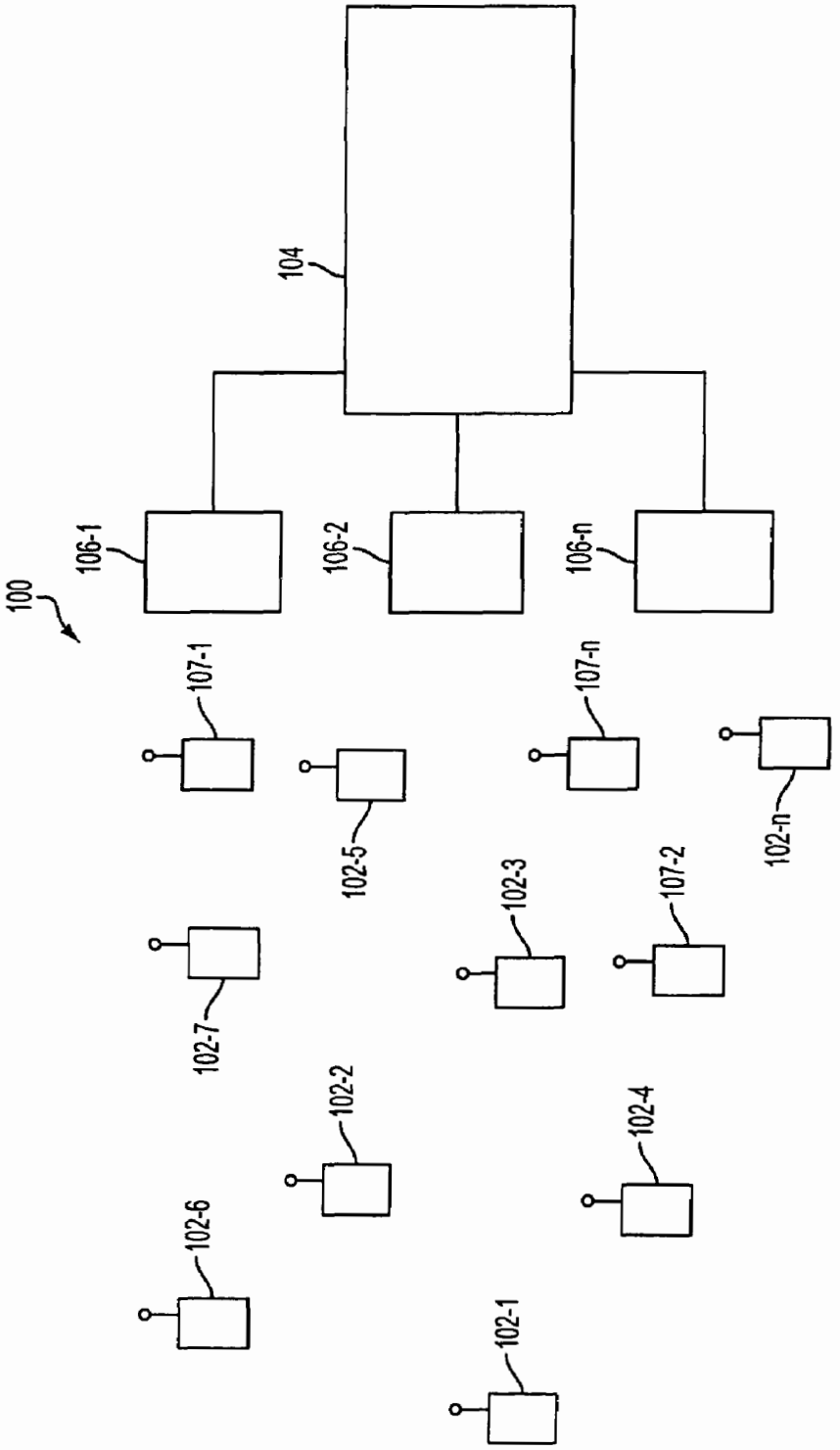
100
104
106-1
106-2
106-n
107-1
107-n
102-5
102-n
102-3
107-2
102-7
102-2
102-4
102-6
102-1

FIG. 1

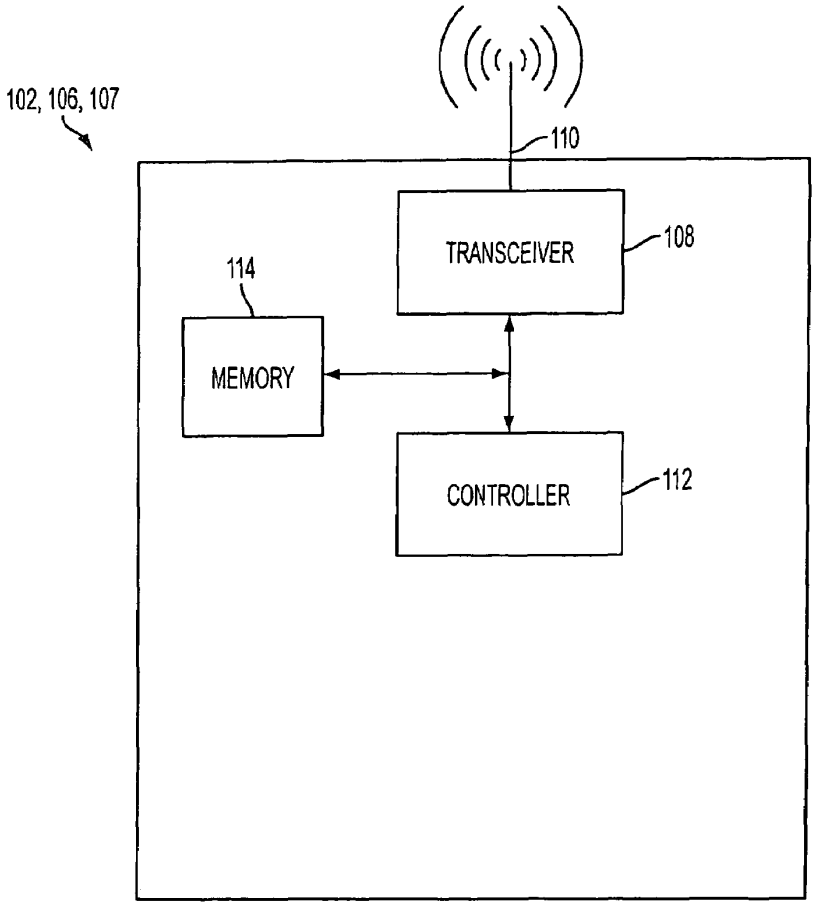

FIG. 2

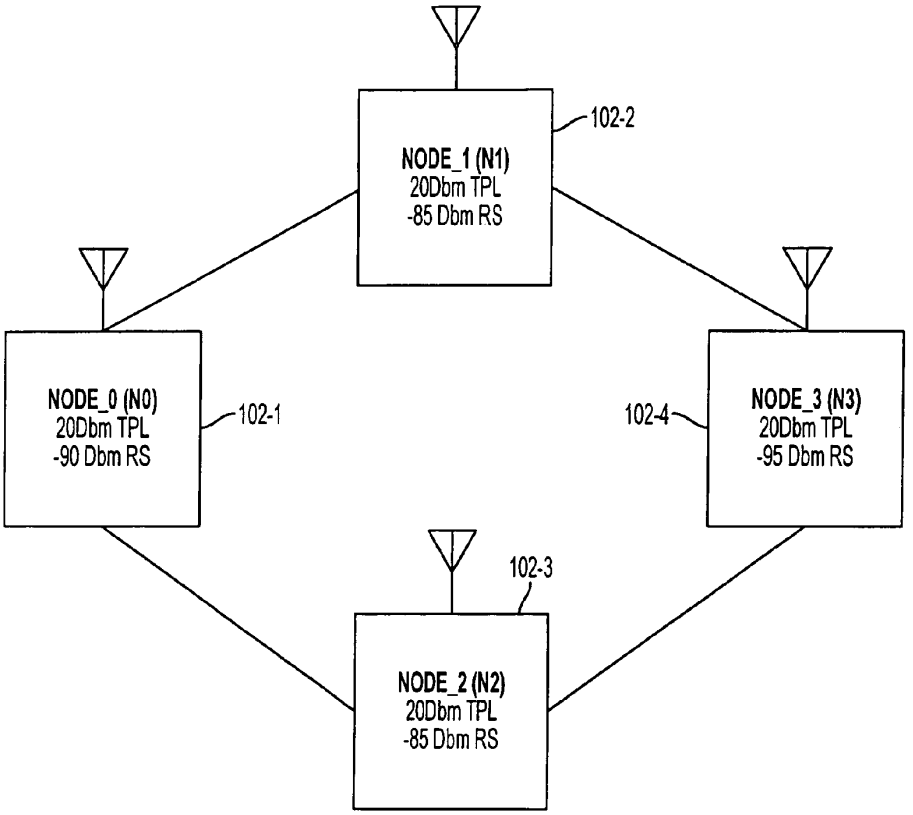
NODE_1 (N1)
20Dbm TPL
-85 Dbm RS
102-2
NODE_0 (N0)
20Dbm TPL
-90 Dbm RS
102-1
NODE_3 (N3)
20Dbm TPL
-95 Dbm RS
102-4
102-3
NODE_2 (N2)
20Dbm TPL
-85 Dbm RS

FIG. 3

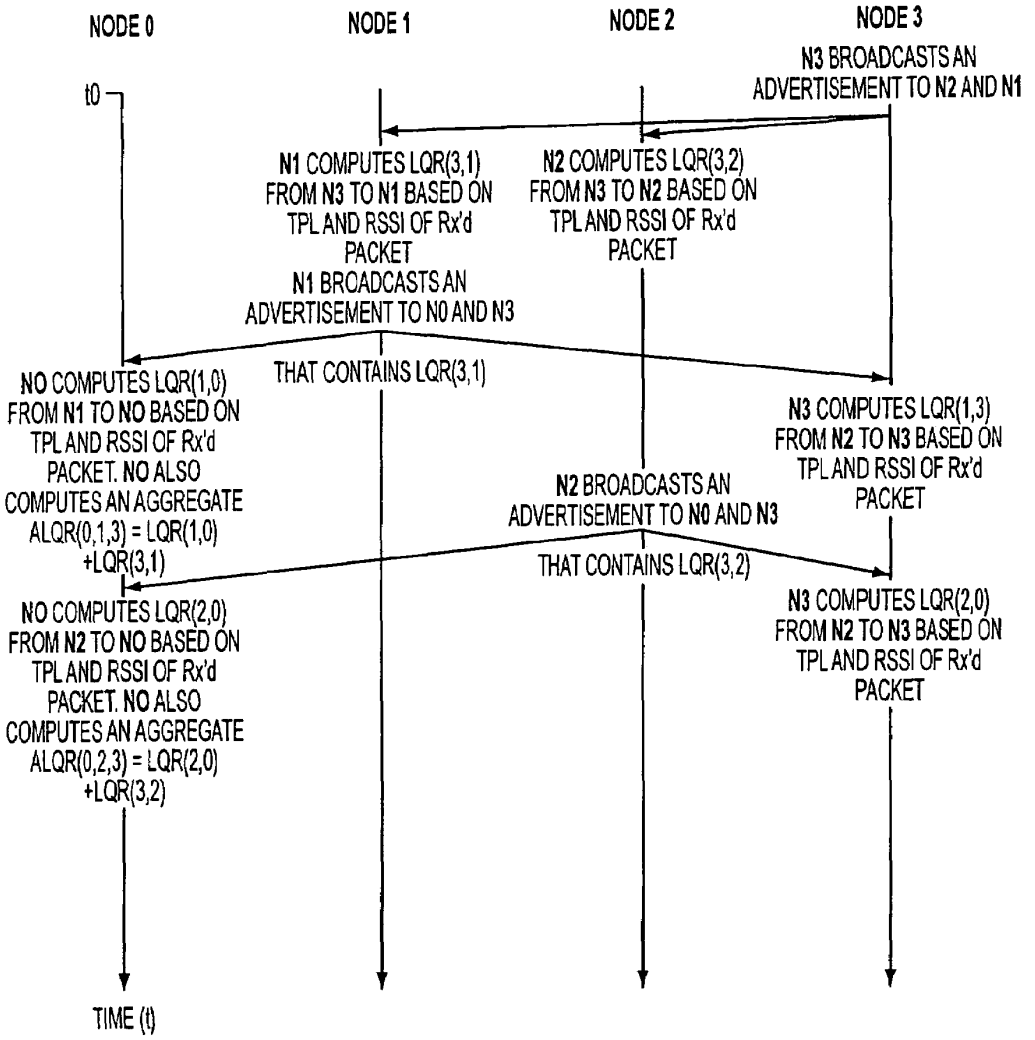
NODE 0
NODE 1
NODE 2
NODE 3
N3 BROADCASTS AN ADVERTISEMENT TO N2 AND N1
t0
N1 COMPUTES LQR(3,1) FROM N3 TO N1 BASED ON TPL AND RSSI OF Rx'd PACKET
N2 COMPUTES LQR(3,2) FROM N3 TO N2 BASED ON TPL AND RSSI OF Rx'd PACKET
N1 BROADCASTS AN ADVERTISEMENT TO N0 AND N3
THAT CONTAINS LQR(3,1)
N0 COMPUTES LQR(1,0) FROM N1 TO N0 BASED ON TPL AND RSSI OF Rx'd PACKET. N0 ALSO COMPUTES AN AGGREGATE ALQR(0,1,3) = LQR(1,0) +LQR(3,1)
N3 COMPUTES LQR(1,3) FROM N2 TO N3 BASED ON TPL AND RSSI OF Rx'd PACKET
N2 BROADCASTS AN ADVERTISEMENT TO N0 AND N3
THAT CONTAINS LQR(3,2)
N0 COMPUTES LQR(2,0) FROM N2 TO N0 BASED ON TPL AND RSSI OF Rx'd PACKET. N0 ALSO COMPUTES AN AGGREGATE ALQR(0,2,3) = LQR(2,0) +LQR(3,2)
N3 COMPUTES LQR(2,0) FROM N2 TO N3 BASED ON TPL AND RSSI OF Rx'd PACKET
TIME (t)

FIG. 4

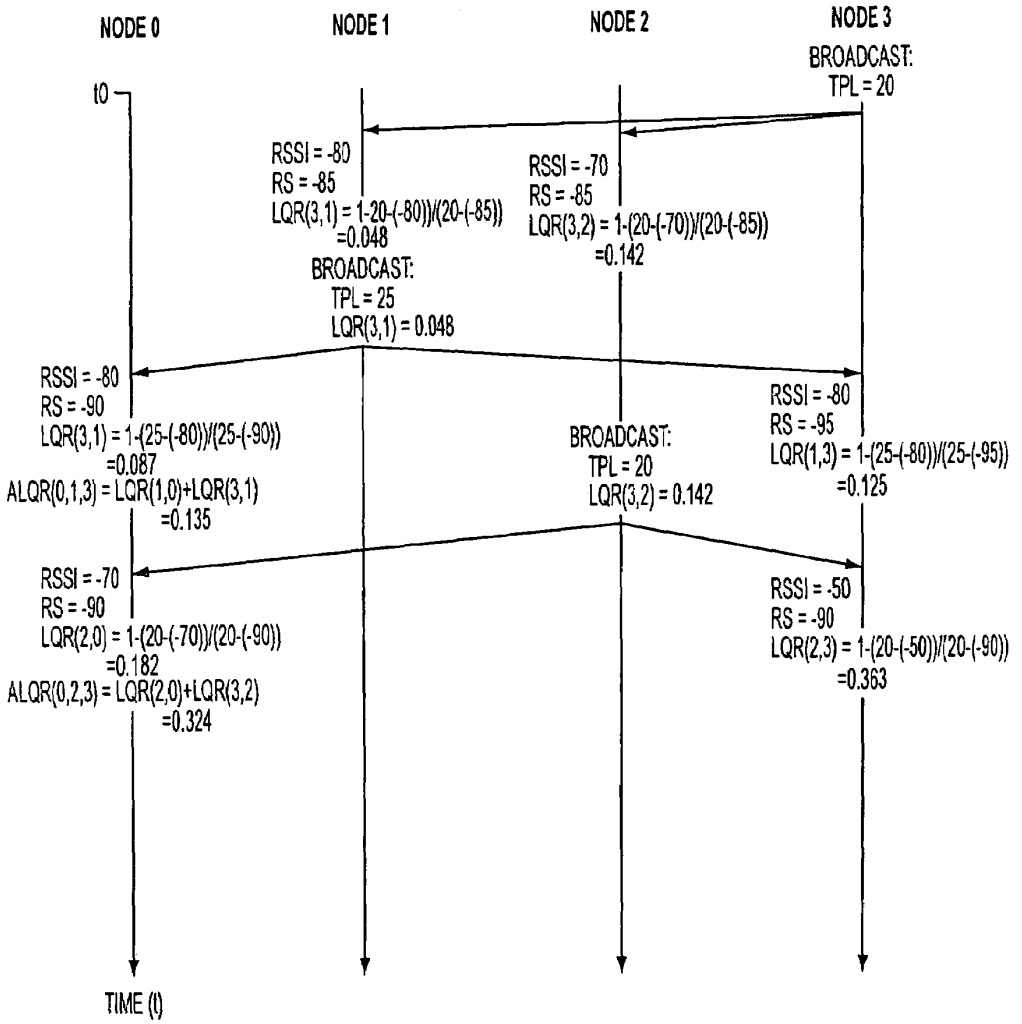
NODE 0
NODE 1
NODE 2
NODE 3
BROADCAST:
TPL = 20
t0
RSSI = -80
RS = -85
LQR(3,1) = 1-20-(-80))/(20-(-85))
=0.048
RSSI = -70
RS = -85
LQR(3,2) = 1-(20-(-70))/(20-(-85))
=0.142
BROADCAST:
TPL = 25
LQR(3,1) = 0.048
RSSI = -80
RS = -90
LQR(3,1) = 1-(25-(-80))/(25-(-90))
=0.087
ALQR(0,1,3) = LQR(1,0)+LQR(3,1)
=0.135
BROADCAST:
TPL = 20
LQR(3,2) = 0.142
RSSI = -80
RS = -95
LQR(1,3) = 1-(25-(-80))/(25-(-95))
=0.125
RSSI = -70
RS = -90
LQR(2,0) = 1-(20-(-70))/(20-(-90))
=0.182
ALQR(0,2,3) = LQR(2,0)+LQR(3,2)
=0.324
RSSI = -50
RS = -90
LQR(2,3) = 1-(20-(-50))/(20-(-90))
=0.363
TIME (t)

FIG. 5

SYSTEM AND METHOD FOR USING PER-PACKET RECEIVE SIGNAL STRENGTH INDICATION AND TRANSMIT POWER LEVELS TO COMPUTE PATH LOSS FOR A LINK FOR USE IN LAYER II ROUTING IN A WIRELESS COMMUNICATION NETWORK

BACKGROUND OF THE INVENTION

1. Field of the Invention

The present invention relates to a system and method for using a receive signal strength indication and a transmit power level to determine the integrity of a link for use in Layer II routing in a network, such as an 802.11 network. More particularly, the present invention relates to a system and method for using indications of per-packet receive signal strengths and per-packet transmit power levels to compute path losses for links between nodes in a communication network, such as an 802.11 network, in order to select the most suitable link over which to send data packets between the nodes.

2. Description of the Related Art

In recent years, a type of mobile communications network known as an "ad-hoc" network has been developed. In this type of network, each user terminal (hereinafter "mobile node") is capable of operating as a base station or router for the other mobile nodes, thus eliminating the need for a fixed infrastructure of base stations. Accordingly, data packets being sent from a source mobile node to a destination mobile node are typically routed through a number of intermediate mobile nodes before reaching the destination mobile node. Details of an ad-hoc network are set forth in U.S. Pat. No. 5,943,322 to Mayor, the entire content of which is incorporated herein by reference.

More sophisticated ad-hoc networks are also being developed which, in addition to enabling mobile nodes to communicate with each other as in a conventional ad-hoc network, further enable the mobile nodes to access a fixed network and thus communicate with other types of user terminals, such as those on the public switched telephone network (PSTN) and on other networks such as the Internet. Details of these types of ad-hoc networks are described in U.S. patent application Ser. No. 09/897,790 entitled "Ad Hoc Peer-to-Peer Mobile Radio Access System Interfaced to the PSTN and Cellular Networks", filed on Jun. 29, 2001, in U.S. patent application Ser. No. 09/815,157 entitled "Time Division Protocol for an Ad-Hoc, Peer-to-Peer Radio Network Having Coordinating Channel Access to Shared Parallel Data Channels with Separate Reservation Channel", filed on Mar. 22, 2001, and in U.S. patent application Ser. No. 09/815,164 entitled "Prioritized-Routing for an Ad-Hoc, Peer-to-Peer, Mobile Radio Access System", filed on Mar. 22, 2001, the entire content of each of said patent applications being incorporated herein by reference.

As can be appreciated by one skilled in the art, when a node sends packetized data to a destination node, the node typically checks its routing table to determine whether the destination node is contained in its routing table. If the destination node is contained in the node's routing table, the data is transmitted via a path that leads to the destination node. If the destination node is not listed in the node's routing table, then the packet is sent to one or more other nodes listed in the node's routing table, and those other nodes determine if the destination table is listed in their routing tables. The process continues until the data packet eventually reaches the destination node.

In these types of ad-hoc networks, the algorithms that are used to determine the path of intermediate nodes via which the data packets are routed between source and destination nodes are typically based on the shortest distance between the source and destination nodes or, assuming that the data packet transport medium is wireless, the least power required to perform the routing. However, such algorithms do not necessarily produce a predictable delivery of data packets. For example, routing of data packets can be delayed due to congestion in intermediate nodes. Also, delivery failure of data packets can occur on noisy radio links between nodes. Moreover, because many of the nodes are mobile, the conditions of the links can be constantly changing.

In addition, other factors such as the signal strength at which a data-packet is received by a node over a link, as well as the power level at which the node finds it necessary to transmit a data-packet over the link, provide an indication of the integrity of the link. Currently, ad-hoc wireless communications networks, and especially those employing terminals which operate in accordance with 802.11 standards, do not take into account the received signal strength or the transmitted power level when determining the suitability of a link for use in sending data packets between nodes. Details of the 802.11 standards are set forth in ISO/IEC 8802-11, ANSI/IEEE 802.11 "Information Technology—Telecommunications and Information Exchange Between Systems—Local and Metropolitan Area Network Specific Requirements", Part 11: Wireless Medium Access Control (MAC) and Physical Layer (PHY) Specifications, the entire contents of which being incorporated herein by reference. Also, a description of the 802.11 standard is found in a book by Bob O'Hara and Al Petrick entitled *IEEE* 802.11 *Handbook: A Designer's Companion*, IEEE, 1999, the entire contents of which being incorporated herein by reference.

Accordingly, a need exists for a system and method which enables wireless ad-hoc communications network, such as an 802.11 network, to evaluate the integrity of a link between nodes based on the strength at which a signal is received over the link and transmission power level at which a signal is transmitted over the link, in order to determine whether to use the link for data packet routing between the nodes.

SUMMARY OF THE INVENTION

An object of the present invention is to provide a system and method for computing the path loss along a link between nodes in a wireless ad-hoc communications network using transmitted power level information contained in a received data packet and the receive signal strength indication (RSSI) at which the data packet is received.

Another object of the present invention is to provide a system and method for enabling a node, such as a mobile user terminal, in a wireless communications network, such as an 802.11 network, to compute the path loss along a link between itself and another node using the per-packet RSSI and the per-packet transmitted power level of data packets received and transmitted over that link, to thus determine the suitability of that link.

A further object of the present invention is to provide a system and method that provides for improved communication between nodes in an ad-hoc wireless communications network, in particular, an 802.11 network, by allowing the nodes to select the path having the least loss as a medium for transporting packets.

These and other objects are substantially achieved by providing a system and method for evaluating at least one communication link between a transmitting node and a receiving node in a communications network, such as a wireless ad-hoc communications network in accordance with the 802.11 standard. The system and method perform the operation of assigning respective link quality values to the respective communication links based on a transmit power level (TPL) value at which the respective data packets were transmitted by the transmitting node over the respective links, a received sensitivity (RS) value of the receiving node receiving the data packets, and a receive signal strength indication (RSSI) value provided by the network for each respective link. The system and method can examine a content of a data packet being sent between the two nodes to determine the TPL, and can receive the RSSI value from a physical layer of the communications network. Accordingly, the system and method can determine which link that additional data packets are to be sent by the transmitting node to the receiving node via the communication link based on the link quality values. Specifically, the link having the highest link quality value is selected.

BRIEF DESCRIPTION OF THE DRAWINGS

These and other objects, advantages and novel features of the invention will be more readily appreciated from the following detailed description when read in conjunction with the accompanying drawings, in which:

FIG. **1** is a block diagram of an example of an ad-hoc wireless communications network employing a system and method for evaluating the integrity of links between nodes according to an embodiment of the present invention;

FIG. **2** is a block diagram illustrating an example of components of a node employed in the network shown in FIG. **1**;

FIG. **3** is a block diagram depicting a comparison of path loss for two routes between nodes in the ad-hoc wireless communications network shown in FIG. **1** according to an embodiment of the present invention; and

FIGS. **4** and **5** are timing diagrams illustrating an example of operations performed for computing a quality value for a link between nodes in the network shown in FIG. **1** according to an embodiment of the present invention.

DETAILED DESCRIPTION OF THE PREFERRED EMBODIMENTS

FIG. **1** is a block diagram illustrating an example of an ad-hoc packet-switched wireless communications network **100** employing an embodiment of the present invention. Specifically, the network **100** includes a plurality of mobile wireless user terminals **102-1** through **102**-n (referred to generally as nodes or mobile nodes **102**), and a fixed network **104** having a plurality of access points **106-1**, **106-2**, . . . **106**-n (referred to generally as nodes or access points **106**), for providing the nodes **102** with access to the fixed network **104**. The fixed network **104** includes, for example, a core local access network (LAN), and a plurality of servers and gateway routers, to thus provide the nodes **102** with access to other networks, such as other ad-hoc networks, the public switched telephone network (PSTN) and the Internet. The network **100** further includes a plurality of fixed routers **107-1** through **107**-n (referred to generally as nodes or fixed routers **107**) for routing data packets between other nodes **102**, **106** or **107**.

As can be appreciated by one skilled in the art, the nodes **102**, **106** and **107** are capable of communicating with each other directly, or via one or more other nodes **102**, **106** or **107** operating as a router or routers for data packets being sent between nodes **102**, as described in U.S. Pat. No. 5,943,322 to Mayor and in U.S. patent application Ser. Nos. 09/897,790, 09/815,157 and 09/815,164, referenced above. Specifically, as shown in FIG. **2**, each node **102**, **106** and **107** includes a transceiver **108** which is coupled to an antenna **110** and is capable of receiving and transmitting signals, such as packetized data signals, to and from the node **102**, **106** or **107**, under the control of a controller **112**. The packetized data signals can include, for example, voice, data or multimedia.

Each node **102**, **106** and **107** further includes a memory **114**, such as a random access memory (RAM), that is capable of storing, among other things, routing information pertaining to itself and other nodes **102**, **106** or **107** in the network **100**. The nodes **102**, **106** and **107** exchange their respective routing information, referred to as routing advertisements or routing table information, with each other via a broadcasting mechanism periodically, for example, when a new node **102** enters the network **100**, or when existing nodes **102** in the network **100** move. A node **102**, **106** or **107** will broadcast its routing table updates, and nearby nodes **102**, **106** or **107** will only receive the broadcast routing table updates if within broadcast range (e.g., radio frequency (RF) range) of the broadcasting node **102**, **106** or **107**. For example, assuming that nodes **102-1**, **102-2** and **102-7** are within the RF broadcast range of node **102-6**, when node **102-6** broadcasts its routing table information, that information is received by nodes **102-1**, **102-2** and **102-7**. However, if nodes **102-3**, **102-4** and **102-5** through **102**-n are out of the broadcast range, none of those nodes will receive the broadcast routing table information from node **102-6**.

An example of the manner in which the integrity of a link is evaluated in accordance with an embodiment of the present invention will now be discussed with reference to FIGS. **1**–**4**. Specifically, an embodiment of the present invention uses the available per-packet receive signal strength indication (RSSI) from an 802.11 physical layer combined with the per-packet transmitted power level to evaluate the path loss along a link for a packet sent within the network **100**, which in this example is an 802.11 wireless network as discussed in the Background section above.

The per-packet path loss is used as a metric that determines the integrity of a link between two 802.11-compliant nodes **102**, **106** or **107**, as well as the probability that future packets will be successfully transmitted on the link between the two nodes. Routing algorithms in Layer II of the network **100**, which is known as the switching layer as can be appreciated by one skilled in the art, can use this probability to eliminate links that have a low probability of successful packet delivery.

Referring to FIG. **3**, four nodes **102-1**, **102-2**, **102-3** and **102-4**, which are also identified as nodes N**0**, N**1**, N**2** and N**3**, respectively, are depicted as forming two routes. The first route comprises nodes N**0**, N**1** and N**3**, while the second route comprises nodes N**0**, N**2** and N**3**. In this example, node N**0** is the origination node and node N**34** is the destination node, while nodes N**1** and N**2** are intermediate nodes. An example of the manner in which an embodiment of the present invention computes path loss will now be discussed in detail with respect to FIGS. **3**–**5**.

As shown in FIGS. **4** and **5**, each node N**0** through N**3** in the network **100** periodically broadcasts routing advertisements to other nodes within its broadcast range. In this

example, node N3 broadcasts routing advertisements to nodes N2 and N1 which are within the broadcast range of node N3. A broadcast routing advertisement includes information in its header pertaining to the transmit power level (TPL) in Decibels (Dbm). That is, prior to transmitting a packet, the controller **112** of node N3 causes this information to be included in the header of the packet. The RSSI is available from the 802.11 physical layer implementation Also, each node knows its receive sensitivity (RS), which is the lowest level signal strength at which a received signal containing a data packet can be received in order for the node to be able to successfully recover data from the received data packet. In other words, any signal received with a value less than the threshold RS value will be viewed as noise. The following equation represents an example of the manner in which the value of the link quality ratio (LQR) of the link from node N3 to node N2, and from node N3 to node N1, can be calculated that yields a ratio which can be used to measure the per packet link quality between wireless nodes in the network **100**:

$$LQR=1-(TPL(\text{Dbm})-RSSI(\text{Dbm}))/(TPL(\text{Dbm})-RS(\text{Dbm}))$$

In this example, each node N0 through N3 in FIG. **3** has a TPL value of 20 Dbm. Node N0 has an RS value of −90 Dbm, nodes N1 and N2 each have an RS value of −85 Dbm, and node N3 has an RS value of −95 Dbm. In this example, the RSSI for the link from node N3 to node N2 is −70 Dbm, and the RSSI for the link from node N3 to node N1 is −80 Dbm. Accordingly, applying the LQR equation to the TPL, RS and RSSI values at node N2, a LQR value can be calculated by the controller **112** of node N2 as follows:

$$1-[((20\ \text{Dbm}-(-70\ \text{Dbm}))/(20\ \text{Dbm}-(-85\ \text{Dbm}))]=0.142\ LQR$$

The RSSI value for the link between nodes N3 and N2 is −80 Dbm. Applying the LQR equation as shown results in:

$$1-[((20\ \text{Dbm}-(-80\ \text{Dbm}))/(20\ \text{Dbm}-(-85\ \text{Dbm}))]=0.048\ LQR$$

As indicated, the route from node N3 to node N1 has a higher LQR value that the route from node N3 to node N2, which indicates that the route from node N3 to node N1 has a higher integrity level and there is thus a higher probability that future packets taking this route will have better success than if they took the route from node N3 to node N2. As further shown in FIGS. **4** and **5**, node N1 broadcasts a routing advertisement to nodes N0 and N3 which are in the broadcast range of node N1. Nodes N0 and N3 calculate the respective LQR based on these received routing advertisements in the manner described above. It is further noted that the routing advertisements broadcast by node N1 includes information pertaining to the calculated LQR for the link from node N3 to node N1. Node N2 also broadcasts a routing advertisement to nodes N0 and N3 which are in the broadcast range of node N2. It is further noted that the routing advertisements broadcast by node N2 includes information pertaining to the calculated LQR for the link from node N3 to node N2.

The respective controllers **112** of nodes N0 and N3 thus calculate the respective LQR based on these received routing advertisements in the manner described above. It is also noted that node N0 is not shown as broadcasting any routing advertisements to any of the nodes within its broadcast range because, as discussed above, node N0 in this example is an origination node that sends a data packet to a destination node N3, and thus its routing advertisements are irrelevant for purposes of this description. However, like all nodes, node N0 would broadcast routing advertisements to the nodes in its broadcast range.

Furthermore, because node N0 is the origination node in this example, and is sending a data packet to destination node N3, the controller **112** of node N0 also calculates the aggregate link quality ratio (ALQR) for the two paths, namely, the path including nodes N0, N1 and N3, and the path including nodes N0, N1 and N3. Hence, node **0** calculates the ALQR for the path including nodes N0, N1 and N3 by adding the LQRs for the links N3 to N1 and NI to N0 as calculated above. The ALQR for this path is calculated to be 0.135 as shown in FIG. **5**. Similarly, node **0** calculates the ALQR for the path including nodes N0, N2 and N3 by adding the LQRs for the links N3 to N2 and N2 to N0 as calculated above. The ALQR for this path is calculated to be 0.324 as shown in FIG. **5**. Assuming that all other variables are equal, the controller **112** of node N0 chooses the path having the highest ALQR, namely, the path including nodes N0, N2 and N3

As noted before, the check for LQR is done with the delivery of each packet. Thus, the technique according to the embodiment of the present invention described above provides a means of determining the best route on a continuous basis. Therefore, the mobility of the nodes **102** does not have a major effect on the quality of packet transmission for the wireless network **100**. Furthermore, a running average of the LQR can be maintained by the source node N0 to determine the probable link reliability and can be used in determining which potential route to select. That is, over time, the LQR of the respective links can be accumulated to provide a more statistically meaningful measure of the quality of the links.

It can be assumed that future packets taking the selected route will also have a higher LQR value. However, as noted above, the check for LQR values is done continuously. Therefore, future selected routes can change based on the LQR values changing for presently used routes. For example, presently used routes can have LQR values that diminish. In another example, presently used routes can maintain the same LQR value, but unused routes can have an increase in LQR value.

It will also be appreciated by those skilled in the art that although the technique is described above in relation to 802.11 protocols, the technique invention can be modified to include other protocols and still fall within the scope of the present invention. For example, the techniques described above can be employed in other types of wireless mediums, such as Home RF, Bluetooth, and so on.

Although only a few exemplary embodiments of the present invention have been described in detail above, those skilled in the art will readily appreciate that many modifications are possible in the exemplary embodiments without materially departing from the novel teachings and advantages of this invention. Accordingly, all such modifications are intended to be included within the scope of this invention as defined in the following claims.

What is claimed is:

1. A system, adapted for use in a communications network, for evaluating at least one communication link between a transmitting node and a receiving node in the communications network, the system comprising:

a processor for assigning a link quality value to said communication link based on a transmit power level (TPL) value at which said data packet was transmitted by said transmitting node, a received sensitivity (RS) value of said receiving node receiving said data packet,

and a receive signal strength indication (RSSI) value provided by said network; and

wherein said processor calculates said link quality value as a link quality ratio (LQR) represented by the equation

$$LQR=1-(TPL-RSSI)/(TPL-RS).$$

2. A system as claimed in claim **1**, further comprising:

a packet analyzer for examining a content of a data packet being sent between said two nodes to determine said TPL.

3. A system as claimed in claim **1**, wherein:

said processor receives said RSSI value from a physical layer of said communications network.

4. A system as claimed in claim **1**, wherein:

said processor determines whether additional data packets are to be sent by said transmitting node to said receiving node via said communication link based on said link quality value.

5. A system as claimed in claim **1**, wherein:

said network includes an ad-hoc wireless communications network; and

said processor assigns said link quality value to said communication link between said transmitting and receiving nodes which are each wireless nodes in said ad-hoc wireless communications network.

6. A system as claimed in claim **1**, wherein:

said network includes an 802.11-type network; and

said processor assigns said link quality value to said communication link between said transmitting and receiving nodes which are each wireless 802.11-type nodes in said 802.11-type network.

7. A system as claimed in claim **1**, wherein:

said processor assigns a respective said link quality value to each respective one of said communication links between said transmitting and receiving nodes.

8. A system as claimed in claim **7**, wherein:

said processor selects one of said communication links as a selected route via which additional data packets are to be sent by said transmitting node to said receiving node via said communication link based on said link quality value.

9. A system as claimed in claim **8**, wherein:

said processor selects as said selected route one of said communications links having the highest link quality value.

10. A system as claimed in claim **1**, wherein:

said processor assigns said link quality value on a per packet basis.

11. A method for evaluating at least one communication link between a transmitting node and a receiving node in a communications network, the method comprising:

assigning a link quality value to said communication link based on a transit power level (TPL) value at which said data packet was transmitted by said transmitting node, a received sensitivity (RS) value of said receiving node receiving said data packet, and a receive signal strength indication (RSSI) value provided by said network; and

wherein said assigning calculates said link quality value as a link quality ratio (LQR) represented by the equation

$$LQR=1-(TPL-RSSI)/(TPL-RS).$$

12. A method as claimed in claim **11**, further comprising:

examining a content of a data packet being sent between said two nodes to determine said TPL.

13. A method as claimed in claim **11**, further comprising:

receiving said RSSI value from a physical layer of said communications network.

14. A method as claimed in claim **11**, further comprising:

determining whether additional data packets are to be sent by said transmitting node to said receiving node via said communication link based on said link quality value.

15. A method as claimed in claim **11**, wherein:

said network includes an ad-hoc wireless communications network; and

said assigning signs said link quality value to said communication link between said transmitting and receiving nodes which are each wireless nodes in said ad-hoc wireless communications network.

16. A method as claimed in claim **11**, wherein:

said network includes an 802.11-type network; and

said assigning assigns said link quality value to said communication link between said transmitting and receiving nodes which are each wireless 802.11-type nodes in said 802.11-type network.

17. A method as claimed in claim **11**, wherein:

said assigning assigns a respective said link quality value to each respective one of said communication links between said transmitting and receiving nodes.

18. A method as claimed in claim **17**, further comprising:

selecting one of said communication links as a selected route via which additional data packets are to be sent by said transmitting node to said receiving node via said communication link based on said link quality value.

19. A method as claimed in claim **18**, wherein:

said selecting selects as said selected route one of said communications links having the highest link quality value.

20. A method as claimed in claim **11**, wherein:

said assigning assigns said link quality value on a per packet basis.

21. A computer-readable medium of instructions, adapted for use with a communications network for evaluating at least one communication link between a transmitting node and a receiving node in the communications network, the instructions comprising:

a first set of instructions for assigning a link quality value to said communication link based on a transmit power level (TPL) value at which said data packet was transmitted by said transmitting node, a received sensitivity (RS) value of said receiving node receiving said data packet, and a receive signal strength indication (RSSI) value provided by said network; and

wherein said first set of instructions calculates said link quality value as a link quality ratio (LQR) represented by the equation

$$LQR=1-(TPL-RSSI)/(TPL-RS).$$

22. A computer-readable medium of instructions as claimed in claim **21**, further comprising:

a second set of instructions for examining a content of a data packet being sent between said two nodes to determine said TPL.

23. A computer-readable medium of instructions as claimed in claim **21**, further comprising:

a third set of instructions for obtaining said RSSI value from a physical layer of said communications network.

24. A computer-readable medium of instructions as claimed in claim **21**, further comprising:

a fourth set of instructions for determining whether additional data packets are to be sent by said transmitting

node to said receiving node via said communication link based on said link quality value.

25. A computer-readable medium of instructions as claimed in claim **21**, wherein:

said network includes an ad-hoc wireless communications network; and

said first set of instructions assigns said link quality value to said communication link between said transmitting and receiving nodes which are each wireless nodes in said ad-hoc wireless communications network.

26. A computer-readable medium of instructions as claimed in claim **21**, wherein:

said network includes an 802.11-type network; and

said first set of instructions assigns said link quality value to said communication link between said transmitting and receiving nodes which are each wireless 802.11-type nodes in said 802.11-type network.

27. A computer-readable medium of instructions as claimed in claim **21**, wherein:

said first set of instructions assigns a respective said link quality value to each respective one of said communication links between sad transmitting and receiving nodes.

28. A computer-readable medium of instructions as claimed in claim **27**, further comprising:

a fifth set of instructions for selecting one of said communication links as a selected route via which additional data packets are to be sent by said transmitting node to said receiving node via said communication link based on said link quality value.

29. A computer-readable medium of instructions as claimed in claim **28**, wherein:

said fifth set of instructions selects as said selected route one of said communications links having the highest link quality value.

30. A computer-readable medium of instructions as claimed in claim **21**, wherein:

said first set of instructions assigns said link quality value on a per packet basis.

31. A system as claimed in claim **1**, wherein:

said processor is employed in said receiving node.

32. A system as claimed in claim **31**, wherein:

said receiving node is a mobile wireless node in said communications network.

33. A system as claimed in claim **5**, wherein:

said processor is employed in said receiving node.

34. A system as claimed in claim **33**, wherein:

said receiving node is mobile.

35. A system as claimed in claim **6**, wherein:

said processor is employed in said receiving node.

36. A system as claimed in claim **35**, wherein:

said receiving node is mobile.

37. A method as claimed in claim **11**, wherein:

said receiving node performs said assigning step.

38. A method as claimed in claim **37**, where:

said receiving node is a mobile wireless node in said communications network.

39. A method as claimed in claim **15**, wherein:

said receiving node performs said assigning step.

40. A method as claimed in claim **39**, wherein:

said receiving node is mobile.

41. A method as claimed in claim **16**, wherein:

said receiving node performs said assigning step.

42. A method as claimed in claim **41**, wherein:

said receiving node is mobile.

43. A computer-readable medium of instructions as claimed in claim **21**, wherein:

said first set of instructions controls said receiving node to assign a link quality value to said communication link based on a transmit power level (TPL) value at which said data packet was transmitted by said transmitting node, a received sensitivity (RS) value of said receiving node riving said data packet, and a receive signal strength indication (RSSI) value provided by said network.

44. A computer-readable medium of instructions as claimed in claim **43**, wherein:

said receiving node is a mobile wireless node in said communications network.

45. A computer-readable medium of instructions as claimed in claim **25**, wherein:

said first set of instructions controls said receiving node to assign a link quality value to said communication link based on a transmit power level (TPL) value at which said data packet was transmitted by said transmitting node, a received sensitivity (RS) value of said receiving node receiving said data packet, and a receive signal strength indication (RSSI) value provided by said network.

46. A computer-readable medium of instructions as claimed in claim **45**, wherein:

said receiving node is mobile.

47. A computer-readable medium of instructions as claimed in claim **26**, wherein:

said first set of instructions controls said receiving node to assign a link quality value to said communication link based on a transmit power level (TPL) value at which said data packet was transmitted by said transmitting node, a received sensitivity (RS) value of said receiving node receiving said data packet, and a receive signal strength indication (RSSI) value provided by said network.

48. A computer-readable medium of instructions as claimed in claim **47**, wherein:

said receiving node is mobile.

* * * * *