US012095149B2

(12) **United States Patent**
Puente Baliarda et al.

(10) **Patent No.: US 12,095,149 B2**
(45) **Date of Patent: *Sep. 17, 2024**

(54) **MULTIPLE-BODY-CONFIGURATION MULTIMEDIA AND SMARTPHONE MULTIFUNCTION WIRELESS DEVICES**

(71) Applicant: **Fractus, S.A.**, Barcelona (ES)

(72) Inventors: **Carles Puente Baliarda**, Barcelona (ES); **Josep Mumbru**, Asnières-sur-Seine (FR); **Jordi Ilario**, Barcelona (ES)

(73) Assignee: **Fractus, S.A.**, Barcelona (ES)

(*) Notice: Subject to any disclaimer, the term of this patent is extended or adjusted under 35 U.S.C. 154(b) by 0 days.

This patent is subject to a terminal disclaimer.

(21) Appl. No.: **18/339,523**

(22) Filed: **Jun. 22, 2023**

(65) **Prior Publication Data**

US 2023/0335886 A1 Oct. 19, 2023

Related U.S. Application Data

(63) Continuation of application No. 17/704,942, filed on Mar. 25, 2022, now Pat. No. 11,735,810, which is a

(Continued)

(30) **Foreign Application Priority Data**

Jul. 18, 2006 (EP) 06117352

(51) **Int. Cl.**
H01Q 1/24 (2006.01)
H01Q 1/36 (2006.01)

(Continued)

(52) **U.S. Cl.**
CPC ***H01Q 1/243*** (2013.01); ***H01Q 1/36*** (2013.01); ***H01Q 5/371*** (2015.01); ***H01Q 5/40*** (2015.01);

(Continued)

(58) **Field of Classification Search**
CPC H01Q 1/36; H01Q 21/30; H01Q 9/0407; H01Q 5/00; H01Q 21/28
See application file for complete search history.

(56) **References Cited**

U.S. PATENT DOCUMENTS

3,079,602 A 2/1963 Du Hamel
3,521,284 A 7/1970 Shelton
(Continued)

FOREIGN PATENT DOCUMENTS

CA 2382128 3/2001
CA 2416437 1/2002
(Continued)

OTHER PUBLICATIONS

Document 0288—Defendants LG Electronics Inc., LG Electronics USA, Inc., and LG Electronics Mobilecomm USA Inc. First amended answer and counterclaim to second amended complaint, Defendants, Feb. 24, 2010.

(Continued)

Primary Examiner — Dung Hong
(74) *Attorney, Agent, or Firm* — Edell, Shapiro & Finnan, LLC

(57) **ABSTRACT**

A multifunction wireless device having at least one of multimedia functionality and smartphone functionality, the multifunction wireless device including an upper body and a lower body, the upper body and the lower body being adapted to move relative to each other in at least one of a clamshell, a slide, and a twist manner. The multifunction wireless device further includes an antenna system disposed within at least one of the upper body and the lower body and having a shape with a level of complexity of an antenna contour defined by complexity factors F_{21} having a value of at least 1.05 and not greater than 1.80 and F32 having a value of at least 1.10 and not greater than 1.90.

20 Claims, 29 Drawing Sheets

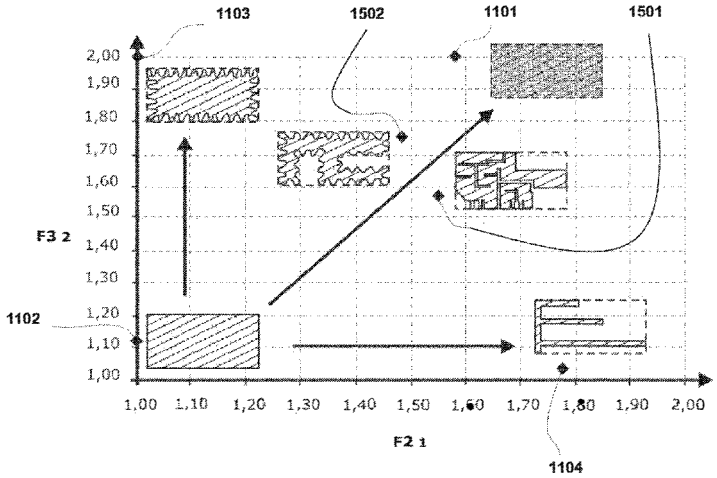

Related U.S. Application Data

continuation of application No. 17/246,192, filed on Apr. 30, 2021, now Pat. No. 11,349,200, which is a continuation of application No. 16/832,820, filed on Mar. 27, 2020, now Pat. No. 11,031,677, which is a continuation of application No. 15/856,626, filed on Dec. 28, 2017, now Pat. No. 10,644,380, which is a continuation of application No. 14/738,090, filed on Jun. 12, 2015, now Pat. No. 9,899,727, which is a continuation of application No. 14/246,491, filed on Apr. 7, 2014, now Pat. No. 9,099,773, which is a continuation of application No. 11/614,429, filed on Dec. 21, 2006, now Pat. No. 8,738,103.

(60) Provisional application No. 60/856,410, filed on Nov. 3, 2006, provisional application No. 60/831,544, filed on Jul. 18, 2006.

(51) **Int. Cl.**
H01Q 5/371 (2015.01)
H01Q 5/40 (2015.01)
H01Q 9/04 (2006.01)

(52) **U.S. Cl.**
CPC ***H01Q 9/0407*** (2013.01); ***H01Q 9/0421*** (2013.01)

(56) **References Cited**

U.S. PATENT DOCUMENTS

3,599,214	A	8/1971	Altmayer
3,622,890	A	11/1971	Fujimoto
3,683,376	A	8/1972	Pronovost
3,683,379	A	8/1972	Saddler
3,689,929	A	9/1972	Moody
3,818,490	A	6/1974	Leahy
3,967,276	A	6/1976	Goubau
3,969,730	A	7/1976	Fuchser
4,021,810	A	5/1977	Urpo
4,024,542	A	5/1977	Ikawa
4,038,662	A	7/1977	Turner
4,072,951	A	2/1978	Kaloi
4,131,893	A	12/1978	Munson
4,141,016	A	2/1979	Nelson
4,318,109	A	3/1982	Weathers
4,356,492	A	10/1982	Kaloi
4,381,566	A	4/1983	Kane
4,471,358	A	9/1984	Glasser
4,471,493	A	9/1984	Shober
4,504,834	A	3/1985	Garay
4,536,725	A	8/1985	Hubler
4,543,581	A	9/1985	Nemet
4,571,595	A	2/1986	Phillips
4,584,709	A	4/1986	Kneisel
4,590,614	A	5/1986	Erat
4,608,572	A	8/1986	Blakney
4,623,894	A	11/1986	Lee
4,628,322	A	12/1986	Marko
4,673,948	A	6/1987	Kuo
4,723,305	A	2/1988	Phillips
4,730,195	A	3/1988	Phillips
4,752,968	A	6/1988	Lindenmeier
4,827,266	A	5/1989	Sato
4,827,271	A	5/1989	Berneking
4,839,660	A	6/1989	Hadzoglou
4,843,468	A	6/1989	Drewery
4,847,629	A	7/1989	Shimazaki
4,849,766	A	7/1989	Inaba
4,857,939	A	8/1989	Shimazaki
4,860,019	A	8/1989	Jiang
4,890,114	A	12/1989	Egashira
4,894,663	A	1/1990	Urbish
4,907,011	A	3/1990	Kuo
4,912,481	A	3/1990	Mace
4,975,711	A	12/1990	Lee
5,030,963	A	7/1991	Tadama
5,138,328	A	8/1992	Zibrick
5,168,472	A	12/1992	Lockwood
5,172,084	A	12/1992	Fiedziuszko
5,200,756	A	4/1993	Feller
5,212,488	A	5/1993	Konotchick
5,212,742	A	5/1993	Normile
5,214,434	A	5/1993	Hsu
5,218,370	A	6/1993	Blaese
5,227,804	A	7/1993	Oda
5,227,808	A	7/1993	Davis
5,245,350	A	9/1993	Sroka
5,248,988	A	9/1993	Makino
5,255,002	A	10/1993	Day
5,257,032	A	10/1993	Diamond
5,307,075	A	4/1994	Huynh
5,337,063	A	8/1994	Takahira
5,337,065	A	8/1994	Bonnet
5,347,291	A	9/1994	Moore
5,355,144	A	10/1994	Walton
5,355,318	A	10/1994	Dionnet
5,363,114	A	11/1994	Shoemaker
5,373,300	A	12/1994	Jenness
5,402,134	A	3/1995	Miller
5,410,322	A	4/1995	Sonoda
5,420,599	A	5/1995	Erkocevic
5,422,651	A	6/1995	Chang
5,451,965	A	9/1995	Matsumoto
5,451,968	A	9/1995	Emery
5,453,751	A	9/1995	Tsukamoto
5,453,752	A	9/1995	Wang
5,457,469	A	10/1995	Diamond
5,471,224	A	11/1995	Barkeshli
5,493,702	A	2/1996	Crowley
5,495,261	A	2/1996	Baker
5,508,709	A	4/1996	Krenz
5,534,877	A	7/1996	Sorbello
5,537,367	A	7/1996	Lockwood
5,557,293	A	9/1996	McCoy
5,569,879	A	10/1996	Gloton
H1631	H	2/1997	Montgomery
5,608,417	A	3/1997	De Vall
5,619,205	A	4/1997	Johnson
5,627,550	A	5/1997	Sanad
5,646,635	A	7/1997	Cockson
5,657,028	A	8/1997	Sanad
5,680,144	A	10/1997	Sanad
5,684,672	A	11/1997	Karidis
5,703,600	A	12/1997	Burrell
5,712,640	A	1/1998	Andou
5,767,811	A	6/1998	Mandai
5,784,032	A	7/1998	Johnston
5,790,080	A	8/1998	Apostolos
5,798,688	A	8/1998	Shofield
5,808,586	A	9/1998	Phillips
5,809,433	A	9/1998	Thompson
5,821,907	A	10/1998	Zhu
5,838,285	A	11/1998	Tay
5,841,402	A	11/1998	Dias
5,841,403	A	11/1998	West
5,870,066	A	2/1999	Asakura
5,872,546	A	2/1999	Ihara
5,898,404	A	4/1999	Jou
5,903,240	A	5/1999	Kawahata
5,918,183	A	6/1999	Janky
5,926,139	A	7/1999	Korisch
5,926,141	A	7/1999	Lindenmeier
5,929,825	A	7/1999	Niu
5,936,583	A	8/1999	Sekine
5,936,587	A	8/1999	Gudilev
5,943,020	A	8/1999	Liebendoerfer
5,966,098	A	10/1999	Qi
5,973,651	A	10/1999	Suesada
5,986,609	A	11/1999	Spall
5,986,610	A	11/1999	Miron
5,986,615	A	11/1999	Westfall
5,990,838	A	11/1999	Burns

(56) **References Cited**

U.S. PATENT DOCUMENTS

5,995,052 A 11/1999 Sadler
6,002,367 A 12/1999 Engblom
6,005,524 A 12/1999 Hayes
6,008,764 A 12/1999 Ollikainen
6,011,518 A 1/2000 Yamagishi
6,011,699 A 1/2000 Murray
6,016,130 A 1/2000 Annamaa
6,028,567 A 2/2000 Lahti
6,028,568 A 2/2000 Asakura
6,031,495 A 2/2000 Simmons
6,031,499 A 2/2000 Dichter
6,031,505 A 2/2000 Qi
6,040,803 A 3/2000 Spall
6,058,211 A 5/2000 Bormans
6,069,592 A 5/2000 Wass
6,072,434 A 6/2000 Papatheodorou
6,075,489 A 6/2000 Sullivan
6,075,500 A 6/2000 Kurz
6,078,294 A 6/2000 Mitarai
6,081,237 A 6/2000 Sato
6,087,990 A 7/2000 Thill
6,091,365 A 7/2000 Derneryd
6,094,179 A 7/2000 Davidson
6,097,339 A 8/2000 Filipovic
6,097,345 A 8/2000 Walton
6,104,349 A 8/2000 Cohen
6,107,920 A 8/2000 Eberhardt
6,111,545 A 8/2000 Saari
6,122,533 A 9/2000 Zhang
6,127,977 A 10/2000 Cohen
6,130,651 A 10/2000 Yanagisawa
6,131,042 A 10/2000 Lee
6,138,245 A 10/2000 Son
6,140,966 A 10/2000 Pankinaho
6,140,969 A 10/2000 Lindenmeier
6,140,975 A 10/2000 Cohen
6,141,540 A 10/2000 Richards
6,147,649 A 11/2000 Ivrissimtzis
6,147,652 A 11/2000 Sekine
6,147,655 A 11/2000 Roesner
6,157,344 A 12/2000 Bateman
6,160,513 A 12/2000 Davidson
6,166,694 A 12/2000 Ying
6,172,618 B1 1/2001 Hakozaki
6,181,281 B1 1/2001 Desclos
6,181,284 B1 1/2001 Madsen
6,195,048 B1 2/2001 Chiba
6,198,442 B1 3/2001 Rutkowski
6,201,501 B1 3/2001 Arkko
6,204,826 B1 3/2001 Rutkowski
6,211,824 B1 4/2001 Holden
6,211,826 B1 4/2001 Aoki
6,211,889 B1 4/2001 Stoutamire
6,215,474 B1 4/2001 Shah
6,218,992 B1 4/2001 Sadler
D441,733 S 5/2001 Do
6,236,366 B1 5/2001 Yamamoto
6,236,372 B1 5/2001 Lindenmeier
6,239,765 B1 5/2001 Johnson
6,243,592 B1 6/2001 Nakada
6,255,994 B1 7/2001 Saito
6,259,407 B1 7/2001 Tran
6,266,023 B1 7/2001 Nagy
6,266,538 B1 7/2001 Waldron
6,271,794 B1 8/2001 Geeraert
6,272,356 B1 8/2001 Dolman
6,275,198 B1 8/2001 Kenoun
6,281,846 B1 8/2001 Puente
6,281,848 B1 8/2001 Nagumo
6,285,326 B1 9/2001 Diximus
6,285,327 B1 9/2001 See
6,285,342 B1 9/2001 Brady
6,288,680 B1 9/2001 Tsuru
6,292,154 B1 9/2001 Deguchi
6,300,910 B1 10/2001 Kim
6,300,914 B1 10/2001 Yang
6,301,489 B1 10/2001 Winstead
6,307,511 B1 10/2001 Ying
6,307,512 B1 10/2001 Geeraert
6,307,519 B1 10/2001 Livingston
6,317,083 B1 11/2001 Johnson
6,320,543 B1 11/2001 Ohata
6,326,919 B1 12/2001 Diximus
6,327,485 B1 12/2001 Waldron
6,329,951 B1 12/2001 Wen
6,329,954 B1 12/2001 Fuchs
6,329,962 B2 12/2001 Ying
6,333,716 B1 12/2001 Pontoppidan
6,333,719 B1 12/2001 Varadan
6,343,208 B1 1/2002 Ying
6,346,914 B1 2/2002 Annamaa
6,348,892 B1 2/2002 Annamaa
6,352,434 B1 3/2002 Emmert
6,353,443 B1 3/2002 Ying
6,360,105 B2 3/2002 Nakada
6,366,243 B1 4/2002 Isohatala
6,367,939 B1 4/2002 Carter
6,373,447 B1 4/2002 Rostoker
6,380,902 B2 4/2002 Duroux
6,384,790 B2 5/2002 Dishart
6,388,626 B1 5/2002 Gamalielsson
6,392,610 B1 5/2002 Braun
6,396,444 B1 5/2002 Goward
6,407,710 B2 6/2002 Keilen
6,408,190 B1 6/2002 Ying
6,417,810 B1 7/2002 Huels
6,417,816 B2 7/2002 Sadler
6,421,013 B1 7/2002 Chung
6,431,712 B1 8/2002 Turnbull
6,380,899 B1 9/2002 Madsen
6,445,352 B1 9/2002 Cohen
6,452,549 B1 9/2002 Lo
6,452,553 B1 * 9/2002 Cohen H01Q 1/36 343/702
6,452,556 B1 9/2002 Ha
6,470,174 B1 10/2002 Schefte
6,476,766 B1 11/2002 Cohen
6,476,769 B1 11/2002 Lehtola
6,480,159 B1 11/2002 Ilsu
6,483,462 B2 11/2002 Weinberger
6,496,154 B2 12/2002 Gyenes
6,498,586 B2 12/2002 Pankinaho
6,498,588 B1 12/2002 Callaghan
6,525,691 B2 2/2003 Varadan
6,538,604 B1 3/2003 Isohatala
6,552,690 B2 4/2003 Veerasamy
6,573,867 B1 6/2003 Desclos
6,597,319 B2 7/2003 Meng
6,603,434 B2 8/2003 Lindenmeier
6,618,017 B1 9/2003 Ryken
6,650,294 B2 11/2003 Ying
6,664,932 B2 12/2003 Sabet
6,680,705 B2 1/2004 Tan
6,697,022 B2 2/2004 Ponce De Leon
6,697,024 B2 2/2004 Fuerst
6,707,428 B2 3/2004 Gram
6,716,103 B1 4/2004 Eck
6,741,215 B2 5/2004 Grant
6,756,944 B2 6/2004 Tessier
6,762,723 B2 7/2004 Di Nallo
6,784,844 B1 8/2004 Boakes
6,801,164 B2 10/2004 Bit-Babik
6,806,834 B2 10/2004 Yoon
6,831,606 B2 12/2004 Sajadinia
6,839,040 B2 1/2005 Huber
6,903,686 B2 6/2005 Vance
6,928,413 B1 8/2005 Pulitzer
6,967,731 B1 11/2005 Kizawa
6,989,794 B2 1/2006 Tran
6,992,633 B2 1/2006 Kim
7,015,868 B2 3/2006 Puente Baliarda et al.
7,030,833 B2 4/2006 Ohara
7,068,230 B2 6/2006 Qi
7,069,043 B2 6/2006 Sawamura

(56) **References Cited**

U.S. PATENT DOCUMENTS

7,075,484	B2	7/2006	Sung	
7,091,911	B2	8/2006	Qi	
7,123,208	B2	10/2006	Puente Baliarda et al.	
7,148,850	B2	12/2006	Puente Baliarda et al.	
7,151,955	B2	12/2006	Huber	
7,183,983	B2	2/2007	Ozden	
7,202,822	B2	4/2007	Baliarda et al.	
7,229,385	B2	6/2007	Freeman	
7,265,724	B1	9/2007	Tan	
7,394,432	B2	7/2008	Baliarda et al.	
7,397,431	B2	7/2008	Baliarda et al.	
7,511,675	B2	3/2009	Puente	
7,528,782	B2	5/2009	Baliarda et al.	
7,548,915	B2	6/2009	Ramer	
8,738,103	B2 *	5/2014	Puente Baliarda	H01Q 1/36 455/575.7
9,099,773	B2 *	8/2015	Puente Baliarda	H01Q 1/36
9,899,727	B2 *	2/2018	Puente Baliarda	H01Q 9/0407
10,644,380	B2 *	5/2020	Puente Baliarda	H01Q 5/40
11,031,677	B2 *	6/2021	Puente Baliarda	H01Q 5/371
11,349,200	B2 *	5/2022	Puente Baliarda	H01Q 1/36
2001/0002823	A1	6/2001	Ying	
2001/0033250	A1	10/2001	Keilen	
2001/0050636	A1	12/2001	Weinberger	
2002/0000940	A1	1/2002	Moren	
2002/0000942	A1	1/2002	Duroux	
2002/0000944	A1 *	1/2002	Sabet	H01Q 5/25 343/895
2002/0036594	A1	3/2002	Gyenes	
2002/0105468	A1	8/2002	Tessier	
2002/0109633	A1	8/2002	Ow	
2002/0126051	A1	9/2002	Jha	
2002/0126054	A1	9/2002	Fuerst	
2002/0126055	A1	9/2002	Lindenmeier	
2002/0140601	A1	10/2002	Sanada et al.	
2002/0140615	A1	10/2002	Carles et al.	
2002/0149519	A1	10/2002	Varadan	
2002/0164986	A1	11/2002	Briand	
2002/0175211	A1	11/2002	Dominquez	
2002/0175866	A1	11/2002	Gram	
2002/0175879	A1	11/2002	Sabet	
2002/0190904	A1	12/2002	Cohen	
2003/0025637	A1	2/2003	Mendolia	
2003/0064750	A1	4/2003	Oh	
2003/0090421	A1	5/2003	Sajadinia	
2003/0098814	A1	5/2003	Keller	
2003/0137461	A1	7/2003	Peng	
2003/0189518	A1	10/2003	Johnson	
2003/0210200	A1	11/2003	McConnell	
2003/0228892	A1	12/2003	Maalismaa	
2004/0009755	A1	1/2004	Yoshida	
2004/0027295	A1	2/2004	Huber	
2004/0029581	A1	2/2004	Lu	
2004/0056985	A1	3/2004	Seong	
2004/0085244	A1	5/2004	Kadambi	
2004/0090372	A1	5/2004	Di Nallo	
2004/0095289	A1	5/2004	Bae	
2004/0110479	A1	6/2004	Ormson	
2004/0119644	A1	6/2004	Puente-Baliarda et al.	
2004/0145527	A1 *	7/2004	Mikkola	H01Q 5/335 343/702
2004/0164904	A1 *	8/2004	Tran	H01Q 9/28 343/700 MS
2004/0176025	A1	9/2004	Holm	
2004/0198436	A1	10/2004	Alden	
2004/0204008	A1	10/2004	Deng	
2004/0204126	A1	10/2004	Reyes	
2004/0212545	A1	10/2004	Li	
2004/0214541	A1	10/2004	Choi	
2005/0001767	A1	1/2005	Wulff et al.	
2005/0017910	A1	1/2005	Park	
2005/0041624	A1	2/2005	Hui	
2005/0057398	A1	3/2005	Ryken	
2005/0069069	A1	3/2005	Gunzelmann	
2005/0075098	A1	4/2005	Lee	
2005/0088340	A1	4/2005	Deng	
2005/0107052	A1	5/2005	Zangerl	
2005/0136958	A1	6/2005	Seshadri	
2005/0153709	A1	7/2005	Forrester	
2005/0156785	A1	7/2005	Ryken	
2005/0157807	A1	7/2005	Shim	
2005/0176390	A1 *	8/2005	Navsariwala	H01Q 5/328 455/168.1
2005/0181826	A1	8/2005	Yueh	
2005/0184909	A1	8/2005	Tchistiakov et al.	
2005/0192009	A1	9/2005	Shaheen	
2005/0195112	A1	9/2005	Baliarda et al.	
2005/0195273	A1	9/2005	Yamamoto	
2005/0201307	A1	9/2005	Chae	
2005/0231439	A1	10/2005	Suwa	
2005/0233705	A1	10/2005	Vare	
2005/0239446	A1	10/2005	Tagawa	
2005/0259013	A1	11/2005	Gala Gala et al.	
2005/0259031	A1	11/2005	Sanz	
2005/0264453	A1	12/2005	Baliarda et al.	
2005/0270995	A1	12/2005	Byun	
2006/0001576	A1	1/2006	Contopanagos	
2006/0015664	A1	1/2006	Zhang	
2006/0019730	A1	1/2006	Kim	
2006/0031616	A1	2/2006	Chuang	
2006/0031886	A1	2/2006	Bae	
2006/0033668	A1	2/2006	Ryu	
2006/0044195	A1	3/2006	Arkko et al.	
2006/0050473	A1	3/2006	Zheng	
2006/0050859	A1	3/2006	Otsuka	
2006/0060068	A1	3/2006	Hwang	
2006/0077115	A1	4/2006	Oh	
2006/0077310	A1	4/2006	Wang	
2006/0082505	A1	4/2006	Baliarda et al.	
2006/0121865	A1	6/2006	Frank et al.	
2006/0290573	A1	12/2006	Puente Baliarda et al.	
2007/0013589	A1	1/2007	Park	
2007/0229383	A1	10/2007	Koyanagi	

FOREIGN PATENT DOCUMENTS

CA	2483357	4/2005
CA	2525859	2/2006
CA	2480581	3/2006
CN	2224466	4/1996
DE	3337941	5/1985
DE	19929689	1/2001
DE	10206426	11/2002
DE	10142965	3/2003
DE	10108859	5/2003
DE	10138265	7/2003
EP	0096847	12/1983
EP	0253608	1/1988
EP	0297813	1/1989
EP	0358090	3/1990
EP	0396033	11/1990
EP	0543645	5/1993
EP	0590671	9/1993
EP	0571124	11/1993
EP	0620677	10/1994
EP	0688040	12/1995
EP	0765001	9/1996
EP	0736926	10/1996
EP	0753897	1/1997
EP	0814536	12/1997
EP	0823748	2/1998
EP	0825672	2/1998
EP	0856907	8/1998
EP	0871238	10/1998
EP	0892459	1/1999
EP	0902472	3/1999
EP	0929121	7/1999
EP	0932219	7/1999
EP	0938158	8/1999
EP	0942488	9/1999
EP	0969375	1/2000
EP	1024552	1/2000
EP	0986130	3/2000
EP	0997972	3/2000

(56) **References Cited**

FOREIGN PATENT DOCUMENTS

EP	0993070	4/2000
EP	0997974	5/2000
EP	1011167	6/2000
EP	1018777	7/2000
EP	1018779	7/2000
EP	1026774	8/2000
EP	1063721	12/2000
EP	1067627	1/2001
EP	1071161	1/2001
EP	1079462	2/2001
EP	1083623	3/2001
EP	1083624	3/2001
EP	1091446	4/2001
EP	1094545	4/2001
EP	1096602	5/2001
EP	1111921	6/2001
EP	1126522	8/2001
EP	1148581	10/2001
EP	1198027	10/2001
EP	0749176	9/2002
EP	1237224	9/2002
EP	1258054	11/2002
EP	1267438	12/2002
EP	1280230	1/2003
EP	1353471	3/2003
EP	0924793	6/2003
EP	1324423	7/2003
EP	1333596	8/2003
EP	1501221	10/2003
EP	1326302	11/2003
EP	1016158	12/2003
EP	1317018	2/2004
EP	1396906	3/2004
EP	1401050	3/2004
EP	1569450	3/2004
EP	1414106	4/2004
EP	1424747	6/2004
EP	1443595	8/2004
EP	1453140	9/2004
EP	1528822	9/2004
EP	0843905	12/2004
EP	1501202	1/2005
EP	1223637	3/2005
EP	1515392	3/2005
EP	1534010	5/2005
EP	1542375	6/2005
EP	1610411	6/2005
EP	1569300	8/2005
EP	1569425	8/2005
EP	1587323	10/2005
EP	1589608	10/2005
EP	1603311	12/2005
EP	1617564	1/2006
EP	1617567	1/2006
EP	1617671	1/2006
EP	1650938	4/2006
EP	1770824	4/2007
EP	1592083	4/2013
ES	2112163	3/1998
ES	2142280	5/2000
ES	2156832	1/2002
ES	2174707	7/2004
FI	972897	1/1999
FR	2543744	10/1984
FR	2704359	11/1994
FR	2837339	9/2003
GB	1313020	4/1973
GB	2161026	1/1986
GB	2215136	9/1989
GB	2293275	3/1996
GB	2317994	4/1998
GB	2330951	5/1999
GB	2355116	4/2001
GB	2361584	10/2001
GB	2376568	12/2002
GB	2387486	10/2003
GB	2417863	3/2006
JP	55147806	11/1980
JP	05007109	1/1993
JP	5129816	5/1993
JP	5267916	10/1993
JP	05283928	10/1993
JP	05308223	11/1993
JP	05347507	12/1993
JP	06085530	3/1994
JP	6204908	7/1994
JP	6252629	9/1994
JP	7073310	3/1995
JP	08052968	2/1996
JP	09069718	3/1997
JP	09199939	7/1997
JP	1997246852	9/1997
JP	10163748	6/1998
JP	10209744	8/1998
JP	10303637	11/1998
JP	11004113	1/1999
JP	11027042	1/1999
JP	11136015	5/1999
JP	11220319	8/1999
MX	PA04009319	6/2005
MX	PA05005670	7/2005
MX	PA05002647	9/2005
SE	518988	12/2002
TW	554571	9/2003
WO	88/09065	11/1988
WO	93/12559	6/1993
WO	95/11530	4/1995
WO	96/04691	2/1996
WO	96/27219	9/1996
WO	96/29755	9/1996
WO	96/38881	12/1996
WO	97/06578	2/1997
WO	97/07557	2/1997
WO	98/05088	2/1997
WO	97/11507	3/1997
WO	97/32355	9/1997
WO	97/33338	11/1997
WO	97/35360	11/1997
WO	97/47054	12/1997
WO	98/12771	3/1998
WO	98/20578	5/1998
WO	98/36469	8/1998
WO	99/03166	1/1999
WO	99/03167	1/1999
WO	99/03168	1/1999
WO	99/25042	5/1999
WO	99/25044	5/1999
WO	99/27607	6/1999
WO	99/27608	6/1999
WO	99/43039	8/1999
WO	99/56345	11/1999
WO	99/57785	11/1999
WO	99/65102	12/1999
WO	00/01028	1/2000
WO	00/03167	1/2000
WO	00/03451	1/2000
WO	00/03453	1/2000
WO	00/08712	2/2000
WO	00/22695	4/2000
WO	00/25266	5/2000
WO	00/34916	6/2000
WO	00/36700	6/2000
WO	00/49680	8/2000
WO	00/52784	9/2000
WO	00/52787	9/2000
WO	00/57511	9/2000
WO	00/65686	11/2000
WO	00/67342	11/2000
WO	00/74172	12/2000
WO	00/77728	12/2000
WO	00/77884	12/2000
WO	01/03238	1/2001
WO	01/05048	1/2001
WO	01/08093	2/2001

(56) **References Cited**

FOREIGN PATENT DOCUMENTS

WO	01/08254	2/2001	
WO	01/08257	2/2001	
WO	01/08260	2/2001	
WO	01/09976	2/2001	
WO	01/11716	2/2001	
WO	01/11721	2/2001	
WO	01/13464	2/2001	
WO	01/15271	3/2001	
WO	01/17061	3/2001	
WO	01/17063	3/2001	
WO	01/17064	3/2001	
WO	01/18909	3/2001	
WO	01/20714	3/2001	
WO	01/20927	3/2001	
WO	01/22528	3/2001	
WO	01/24314	4/2001	
WO	01/24316	4/2001	
WO	01/26182	4/2001	
WO	01/28035	4/2001	
WO	01/29927	4/2001	
WO	01/31739	5/2001	
WO	01/31747	5/2001	
WO	01/33663	5/2001	
WO	01/33664	5/2001	
WO	01/33665	5/2001	
WO	01/35491	5/2001	
WO	01/35492	5/2001	
WO	01/37369	5/2001	
WO	01/37370	5/2001	
WO	01/41252	6/2001	
WO	01/47056	6/2001	
WO	01/48860	7/2001	
WO	01/48861	7/2001	
WO	01/54225	7/2001	
WO	WO-0152353 A2 *	7/2001	..... H01Q 1/36
WO	01/65636	9/2001	
WO	01/69805	9/2001	
WO	01/73890	10/2001	
WO	01/78192	10/2001	
WO	01/82410	11/2001	
WO	01/86753	11/2001	
WO	01/89031	11/2001	
WO	02/01668	1/2002	
WO	02/03092	1/2002	
WO	02/23667	3/2002	
WO	02/35646	5/2002	
WO	02/35652	5/2002	
WO	02/063715	8/2002	
WO	02/065583	8/2002	
WO	02/071535	9/2002	
WO	02/078121	10/2002	
WO	02/078123	10/2002	
WO	02/078124	10/2002	
WO	02/080306	10/2002	
WO	02/084790	10/2002	
WO	02/087014	10/2002	
WO	02/091518	11/2002	
WO	02/095874	11/2002	
WO	02/096166	11/2002	
WO	03/003503	1/2003	
WO	03/017421	2/2003	
WO	03/023900	3/2003	
WO	03/026064	3/2003	
WO	03/043326	5/2003	
WO	03/047035	6/2003	
WO	03/075398	9/2003	
WO	03/083989	10/2003	
WO	2004/001578	12/2003	
WO	2004/027922	4/2004	
WO	2004/062032	7/2004	
WO	2004/066437	8/2004	
WO	2004/070874	8/2004	
WO	2004/077829	9/2004	
WO	2004/079861	9/2004	
WO	2004/084345	9/2004	
WO	2004/097976	11/2004	
WO	2004/114464	12/2004	
WO	2005/004283	1/2005	
WO	2005/006743	1/2005	
WO	2005/013515	2/2005	
WO	2005/050780	6/2005	
WO	2005/055594	6/2005	
WO	2005/057923	6/2005	
WO	2005/062550	7/2005	
WO	2005/067458	7/2005	
WO	2005/069439	7/2005	
WO	2005/076933	8/2005	
WO	2005/081358	9/2005	
WO	2005/083991	9/2005	
WO	2005/081549	10/2005	
WO	2005/093605	10/2005	
WO	2005/104445	11/2005	
WO	2005/107103	11/2005	
WO	2005/114965	12/2005	
WO	2006/003681	1/2006	
WO	2006/008180	1/2006	
WO	2006/010583	2/2006	
WO	2006/011323	2/2006	
WO	2006/011776	2/2006	
WO	2006/027646	3/2006	
WO	2006/036117	4/2006	
WO	2006/043756	4/2006	
WO	2006/051113	5/2006	
WO	2006/070017	7/2006	
WO	2007/028448	3/2007	
WO	2007/128340	11/2007	

OTHER PUBLICATIONS

Document 0290—Defendant HTC America, Inc.'s amended answer and counterclaim to plaintiff's second amended complaint, Defendants, Feb. 24, 2010.

Document 0291—Defendant HTC Corporation's amended answer and counterclaim to plaintiff's second amended complaint, Defendants, Feb. 24, 2010.

Document 0297—Defendant HTC Corporation's amended answer and counterclaim to plaintiff's second amended complaint, Defendants, Feb. 25, 2010.

Document 0298—Defendant HTC America, Inc.'s amended answer and counterclaim to plaintiff's second amended complaint, Defendants, Feb. 25, 2010.

Document 0351—Plaintiff Fractus, S. A.'s answer to amended counterclaims of defendant Samsung Telecommunications America LLC's to Fractus's Second Amended Complaint, Susman Godfrey, Apr. 1, 2010.

Document 0352—Plaintiff Fractus, S. A.'s answer to amended counterclaims of defendant HTC Corporation to Fractus's Second Amended Complaint, Susman Godfrey, Apr. 1, 2010.

Document 0353—Plaintiff Fractus, S. A.'s answer to amended counterclaims of defendant HTC America, Inc. to Fractus's Second Amended Complaint, Susman Godfrey, Apr. 1, 2010.

Document 0354—Plaintiff Fractus, S. A.'s answer to amended counterclaims of defendant LG Electronics Inc., LG Electronics USA, Inc., and LG Electronics Mobilecomm USA Inc's to Fractus's Second Amended Complaint, Susman Godfrey, Apr. 1, 2010.

Document 0415—P.R. 4-3 joint claim construction statement, Susman Godfrey, Jun. 14, 2010.

Document 0423—Fractus SA's Opening Claim Construction Brief with Parties' Proposed and Agreed Constructions in the case of *Fractus SA* v. *Samsung Electornics Co. Ltd. et al.*, Susman Godfrey, Jul. 16, 2010.

Document 0428—Response of defendants Kyocera Communications, Inc; Palm Inc. and UTStarcom, Inc. to plaintiff Fractus SA's opening claim construction brief in "Case 6:09-cv-00203-LED-JDL", Defendants, Jul. 30, 2010.

Document 0429—Declaration of Jeffery D. Baxter—Including Exhibits: J, K, L, M , N , O, P, Q, R, S, T, U, Z, AA, KK, LL, Defendants, Jul. 30, 2010.

(56) **References Cited**

OTHER PUBLICATIONS

Document 0430—Defendants RIM, Samsung, HTC, LG and Pantech's response to plaintiff Fractus SA's opening claim construction brief, Defendants, Jul. 30, 2010.
Document 0430—Defendants RIM, Samsung, HTC, LG and Pantech's response to plaintiff Fractus SA's opening claim construction brief—Exhibit 1—Chart of Agreed Terms and Disputed Terms, Defendants, Jul. 30, 2010.
Document 0430—Defendants RIM, Samsung, HTC, LG and Pantech's response to plaintiff Fractus SA's opening claim construction brief—Exhibit 2—Family Tree of Asserted Patents, Defendants, Jul. 30, 2010.
Document 0430—Defendants RIM, Samsung, HTC, LG and Pantech's response to plaintiff Fractus SA's opening claim construction brief—Exhibit 33—Excerpt from Plaintiff's '868 pat. inf.cont.for Samsung SPH M540, Defendants, Jul. 30, 2010.
Document 0430—Defendants RIM, Samsung, HTC, LG and Pantech's response to plaintiff Fractus SA's opening claim construction brief—Exhibit 34—Excerpts from Plaintiff's '431 patent Infringement Contentions of HTC Diamond, Defendants, Jul. 30, 2010.
Document 0430—Defendants RIM, Samsung, HTC, LG and Pantech's response to plaintiff Fractus SA's opening claim construction brief—Exhibit 41—Demonstrative re: counting segments, Defendants, Jul. 30, 2010.
Document 0430—Defendants RIM, Samsung, HTC, LG and Pantech's response to plaintiff Fractus SA's opening claim construction brief—Exhibit 42—Demonstrative showing how straight segments can be fitted over a curved surface, Defendants, Jul. 30, 2010.
Document 0430—Defendants RIM, Samsung, HTC, LG and Pantech's response to plaintiff Fractus SA's opening claim construction brief—Exhibit 57—Excerpts from Plaintiff's '868 and '762 Pat. Infr. cont. for RIM 8310, Defendants, Jul. 30, 2010.
Document 0440—Fractus's opposition to defendants' motion for summary judgement of invalidity based on Indefiniteness and lack of written description for certain terms, Susman Godfrey, Aug. 16, 2010.
Document 0440-1—Expert declaration by Dr. D. Jaggard including exhibits (curriculum and datasheets from Cushcraft, Antenova, Ethertronics and Taoglas), Susman Godfrey, Aug. 16, 2010.
Document 0440-2—Declaration of Micah Howe in support of Fractus SA opposition to defendants' motion for summary judgement of invalidity based on indefiniteness and lack of written description for certain terms, Heim , Payne and Chorus LLP, Aug. 16, 2010.
Document 0452—Defendant's reply in support of their motion for summary judgment of invalidity based on Indefiniteness and lack of written description for certain terms with exhibits WW, BBB, EEE, GGG, HHH, III, KKK, MMM, NNN, ●●●, PPP, ●, Defendants, Aug. 30, 2010.
Document 0475—●rder. Provisional claim construction and motion for summary judgement. Provisional markman order, Court, Nov. 9, 2010.
Document 0526—Memorandum order and opinion, Court, Dec. 17, 2010.
Document 0575—Fractus 's ●bjections to claim construction memorandum and order, Susman Godfrey, Jan. 14, 2011.
Document 0582—Memorandum opinion and order, Court, Jan. 20, 2011.
Document 0583—Defendant's notice of compliance regarding second amended invalidity contentions, Defendants, Jan. 21, 2011.
Document 0607—Declaration of Thomas E. Nelson—Exhibit A—Antenna photos, Defendants, Feb. 3, 2011.
Document 0609—Fractus' reply to defendant's motion for reconsideration of, and objections to, magistrate Judge Love's markman order, Susman Godfrey, Feb. 4, 2011.
Document 0611—Report and recommendation of United States magistrate judge, Court, Feb. 8, 2011.
Document 0622—●rder adopting report and recommendation of magistrate judge, Court, Feb. 11, 2011.
Document 0624—Notice of compliance with motion practice orders, Susman Godfrey, Feb. 14, 2011.
Document 0641—Defendant HTC America, Inc's second amended answer and counterclaim to plaintiff's second amended complaint, Defendants, Feb. 25, 2011.
Document 0642—Defendant HTC Corporation's second amended answer and counterclaim to plaintiff's second amended complaint, Defendants, Feb. 25, 2011.
Document 0645—Reply brief in support of Defendant's motion for reconsideration of the court's ruling on the term "at least a portion" in the court's Dec. 17, 2010 claim construction order based on newly-available evidence, Defendants, Feb. 25, 2011.
Document 0647—Defendants Samsung Electronics Co LTD (et al) second amended answer and counterclaims to the second amended complaint of plaintiff Fractus SA—Document 647, Defendants, Feb. 28, 2011.
Document 0649—Defendants LG Electronics Inc, LG Electronics USA, and LG Electronics Mobilecomm USA Inc's second amended answer and counterclaim to second amended complaint, Defendants, Feb. 28, 2011.
Document 0657—Defendant Pantech Wireless Inc amended answer, affirmative defenses, and counterclaims to Fractus' second amended complaint, Defendants, Feb. 28, 2011.
Document 0666—Fractus's sur-reply to defendants' motion for reconsideration of the court's Dec. 17, 2010 claim construction order based on newly-available evidence, Susman Godfrey, Mar. 8, 2011.
Document 0670—●rder, Court, Mar. 9, 2011.
Document 0678—Plaintiff Fractus SA's answer to second amended counterclaims of defendant HTC Corporation to Fractus's second amended complaint, Susman Godfrey, Mar. 14, 2011.
Document 0680—Plaintiff Fractus SA's answer to second amended counterclaims of defendant HTC to Fractus's second amended complaint, Susman Godfrey, Mar. 14, 2011.
Document 0694—Plaintiff Fractus SA's answer to second amended counterclaims of defendant LG Electronics to Fractus's second amended complaint, Susman Godfrey, Mar. 15, 2011.
Document 0695—Plaintiff Fractus SA's answer to second amended counterclaims of defendant Samsung to Fractus's second amended complaint, Susman Godfrey, Mar. 15, 2011.
Document 0696—Plaintiff Fractus SA's answer to amended counterclaims of defendant Pantech Wireless Inc to Fractus's second amended complaint, Susman Godfrey, Mar. 15, 2011.
Document 0715—Letter to John D. Love—Permission to file a summary judgment motion of no indefiniteness on the issues wher the Court's Report and Recommendation already has held that the claim term is not indefinite, Susman Godfrey, Mar. 18, 2011.
Document 0716—Letter to John D. Love—Permission to file a partial summary judgement motion on infringement., Susman Godfrey , LLP, Mar. 18, 2011.
Document 0721—Letter to John D. Love—Permission to file a motion for summary judgment of invalidity of the following 7 asserted claims from the MLV, patent family . . . , Defendants—Baker Botts, LLP, Mar. 18, 2011.
Document 0768—Fractus, S.A.'s objections to the Court's Mar. 9, 2011, ●rder, Susman Godfrey, Mar. 25, 2011.
Document 0780—Defendants' opposition to Fractus SA objections to the Court's Mar. 9, 2011 ●rder, Defendants—Baker Botts, LLP, Mar. 31, 2011.
Document 0783—●rder, Court, Apr. 1, 2011.
Document 0841—Stipulation of Dismissal of all Claims and Counterclaims re '850 and '822, Defendants, Apr. 15, 2011.
Document 0843—Joint Motion to Dismiss Claims and Counterclaims re '850 and '822, Defendants, Apr. 15, 2011.
Document 0854—Defendants' Motion to Clarify Claim Construction, Defendants, Apr. 18, 2011.
Document 0868—●rder, Court, Apr. 19, 2011.
Document 0876—Fractus's surreply to defendants' Motion for Summary Judgment re publication dates of three references, Susman Godfrey, Apr. 20, 2011.
Document 0887—Fractus's Response to Defendants' Motion to Clarify Claim Construction, Susman Godfrey, Apr. 25, 2011.

(56) **References Cited**

OTHER PUBLICATIONS

Document 0889—Reply in support of defendants' motion to clarify claim construction, Defendants, Apr. 27, 2011.
Document 0893—Fractus SA's surreply to defendant's motion to clarify claim construction, Susman Godfrey, Apr. 29, 2011.
Document 0900—Order, Court, Apr. 29, 2011.
Document 0901—Report and recommendation of United States Magistrate Judge, Court, May 2, 2011.
Document 0902—Fractus SA's objections to defendants' prior art notice, Susman Godfrey, May 2, 2011.
Document 0915—Defendants' response to plaintiff's objections to defendants notice of prior art, Defendants, May 5, 2011.
Document 0933—Defendants' motion for reconsideration of, and objections to, the May 2, 2011 report and recommendation clarifying claim construction, Defendants, May 9, 2011.
Document 0939—Fractus's response to defendants' motion for reconsideration of and objections to the May 2, 2011, report and recommendations clarifying claim construction, Susman Godfrey, May 10, 2011.
Document 0968—Order, Court, May 13, 2011.
Document 0971—Order, Court, May 13, 2011.
Document 1082—Joint motion to dismiss HTC, Susman Godfrey LLP, Sep. 13, 2011.
Document 1083—Order—Final consent judgement HTC, Court, Sep. 15, 2011.
Document 1088—Samsung's motion to determine intervening rights in view of new Federal Circuit case law or, in the alternative, to stay the case pending the outcome of reexamination, Defendants, Oct. 19, 2011.
Document 1091—Fractus's response to Samsung's motion to determine intervening rights or to stay the case pending the outcome of reexamination, Susman Godfrey LLC, Nov. 2, 2011.
Document 1092—Samsung's reply in support of its motion to determine intervening rights in view of new Federal Circuit case law or, in the alternative, to stay the case pending the outcome of reexamination, Defendants, Nov. 14, 2011.
Expert report of Dr. Warren L. Stutzman (redacted)—expert witness retained by Fractus, Fractus, Feb. 23, 2011.
Expert report of Dwight L. Jaggard (redacted)—expert witness retained by Fractus, Fractus, Feb. 23, 2011.
Expert report of Dwight L. Jaggard (redacted)—expert witness retained by Fractus, Fractus, Feb. 23, 2011, pp. ii-vi, 12-24.
Expert report of Stuart Long (redacted)—expert witness retained by Fractus, Fractus, Feb. 23, 2011.
Fractus' Claim Construction Presentation—Markman Hearing, Fractus, Sep. 2, 2010.
Letter from Baker Botts to Howison & Arnott LLP including exhibits, Defendants—Baker Botts, Aug. 5, 2010.
Letter from Baker Botts to Kenyon & Kenyon LLP, Winstead PC and Howison & Arnott LLP including exhibits., Defendants—Baker Botts, Oct. 28, 2009.
Oral and videotaped deposition of Dr. Stuart Long—vol. 1, , Mar. 11, 2011.
Oral and videotaped deposition of Dr. Stuart Long—vol. 2, Fractus, Mar. 13, 2011.
Oral and videotaped deposition of Dr. Stuart Long—vol. 3, Fractus, Mar. 14, 2011.
Oral and videotaped deposition of Dr. Warren L. Stutzman—vol. 1, Fractus, Mar. 3, 2011.
Oral and videotaped deposition of Dr. Warren L. Stutzman—vol. 2, Fractus, Mar. 4, 2011.
Rebuttal expert report of Dr. Dwight L. Jaggard (redacted version), Fractus, Feb. 16, 2011.
Rebuttal expert report of Dr. Stuart A. Long (redacted version), Fractus, Feb. 16, 2011.
Rebuttal expert report of Dr. Warren L. Stutzman (redacted version), Fractus, Feb. 16, 2011.
The oral and videotaped deposition of Dwight Jaggard. vol. 1, Defendants, Mar. 8, 2011.
The oral and videotaped deposition of Dwight Jaggard. vol. 2, Defendants, Mar. 9, 2011.
The oral and videotaped deposition of Dwight Jaggard. vol. 3, Defendants, Mar. 10, 2011.
Transcript of jury trial before the Honorable Leonard Davis—May 18, 2011—1:00 PM, Court, May 18, 2011.
Transcript of jury trial before the Honorable Leonard Davis—May 18, 2011—8:45 AM, Court, May 18, 2011.
Transcript of jury trial before the Honorable Leonard Davis—May 19, 2011—1:00 PM, Court, May 19, 2011.
Transcript of jury trial before the Honorable Leonard Davis—May 19, 2011—8:45 AM, Court, May 19, 2011.
Transcript of jury trial before the Honorable Leonard Davis—May 20, 2011—12:30 PM, Court, May 20, 2011.
Transcript of jury trial before the Honorable Leonard Davis—May 20, 2011—8:30 AM, Court, May 20, 2011.
Transcript of jury trial before the Honorable Leonard Davis—May 23, 2011—8:55 AM, Court, May 23, 2011.
Dubost , G., Wideband flat dipole and short-circuit microstrip patch elements and arrays. In Handbook of microstrip antennas—Chapter 7, Peter Peregrinus Ltd. James , J. R. ; Hall , P. S. (ed.), Jan. 1, 1989, vol. 1, p. 354-359.
DuHamel , R. H., Broadband logarithmically periodic antenna structures, Convention Record, 1957. IRE International, Mar. 14, 1957, vol. 5, p. 119-128.
DuHamel , R. H. ; Scherer , J. P., Antenna engineering handbook—Chapter 14—Frequency-Independent Antennas, Johnson , R. McGraw-Hill (3rd. edition), Jan. 1, 1993, vol., No., p. 14-1-14-5.
Durgun , A. C. ; Reese , M. S. ; Balanis , C. A. et al, Flexible bow-tie antennas with reduced metallization, Radio and Wireless (RWS), 2011. IEEE Symposium, Jan. 16, 2011, vol., No., pp. 50-53.
Dyson , J. D., The equiangular spiral antenna, Antennas and Propagation, IRE Transactions on, Apr. 1, 1959.
Dyson , J. D., The non-planar equiangular spiral antenna, USAF Antenna Research and Development Program, 8th , 1958. Symposium on the, Oct. 20, 1958.
Efland , T. R. et al, The earth is mobile power, Power Semiconductor Devices and IC's (ISPSD), 2003. International Symposium, Jul. 1, 2003.
Ellis , A. R., Airborne UHF antenna pattern improvements, USAF Antenna Research and Development Program, 3th , 1953. Symposium on the, Oct. 18, 1953.
Erätuuli , P et al, Dual frequency wire antennas, Electronics Letters, Jun. 6, 1996.
Esteban , J. ; Rebollar , J. M., Design and optimization of a compact Ka-Band antenna diplexer, Antennas and Propagation Society (APS), 1995. IEEE International Symposium, Jun. 18, 1995.
Falconer , K., Fractal geometry _Full, John Wiley Sons—2nd ed., Jan. 1, 2003.
Falconer , K., Fractal geometry. Mathematical foundations and applications, John Wiley and Sons, Jan. 1, 1990, p. 38-41.
Falconer , K., Fractal Geometry: Mathematical Foundations and Applications, John Wiley & Sons, Jan. 1, 1990, p. 38-44.
Falconer , K., Fractal Geometry: Mathematical Foundations and Applications, John Wiley & Sons, Jan. 1, 1990, p. 38-45.
Fang , A, A dual frequency equilateral-triangular microstrip antenna with a pair of narrow slots, Microwave and Optical Technology Letters, Oct. 20, 1999.
Feder, J., Fractals, Plenum Press, Jan. 1, 1988, vol., No., pp. 10-11, 15-17, and 25.
Feng , J., Fractional box-counting approach to fractal dimension estimation, Pattern Recognition, 13th , 1996. International Conference on, Jan. 1, 1996.
Fenwick , R. C., A new class of electrically small antennas, Antennas and Propagation, IEEE Transactions on, May 1, 1965.
Ferris , J. E., A status report of an Azimuth and elevation direction finder, USAF Antenna Research and Development Program, 18th , 1968. Symposium on the, Oct. 15, 1968.
Fleischmann , J. et al., Prototyping networked embedded systems, Computer, Feb. 1, 1999.
Fleishmann , M. ; Tildesley , D. J. ; Balls , R. C., Fractals in the natural sciences, Royal Society of London, Jan. 1, 1999.

(56) **References Cited**

OTHER PUBLICATIONS

Force , R. et al., Synthesis of multilayer walls for radomes of aerospace vehicles, USAF Antenna Research and Development Program, 17th , 1967. Symposium on the, Nov. 14, 1967.
Foroutan-Pour , K. ; Dutilleul , P. ; Smith , D.L., Advances in the implementation of the box-counting method of fractal dimension estimation, Applied Mathematics and Computation, May 1, 1999, vol. 105, p. 195-210.
Foss , A., On migrating a legacy application to the palm platform, Program Comprehesion, 12th, 2004. International Workshop on, Jan. 1, 2004.
Fujimoto , K. et al, Small Antennas, Research Studies Press LTD, Jan. 1, 1987, p. Preface and Table of Contents.
Gagnepain , J. J., Fractal approach to two-dimensional and three-dimensional surface roughness, Wear, May 1, 1986, vol. 109.
Gambhir , A., User experience is key (Viewpoint), Mobile Handset Analyst, Sep. 12, 2006.
Gandara , T. et al., Planar inverted-F antennas for small multi-standard handsets, Applied Electromagnetics and Communications (ICECom), 18th , 2005 International Conference on, Oct. 12, 2005.
Garg , R. et al, Microstrip antenna design handbook---Chapter 1—Microstrip Radiators, Artech House, Jan. 1, 2001.
Garg , R. et al., Characteristics of coupled microstriplines, Microwave Theory and Techniques, IEEE Transactions on, Jul. 1, 1979.
Garg , R. et al., Microstrip antenna design handbook, Artech House, Jan. 1, 2001, p. 845.
George , J. ; Aanandan , C. K. ; Mohanan , P. et al, Analysis of a new compact microstrip antenna, Antennas and Propagation, IEEE Transactions on, Nov. 1, 1998.
Gianvittorio , J. P., Fractal element antennas—a compilation of configurations with novel characteristics, Antennas and Propagation Society (APS), 2000. IEEE International Symposium, Jul. 16, 2000.
Gilbert , R. ; Pirrung , A. ; Kopf , D. et al., Structurally-integrated optically-reconfigurable antenna array, Antenna Applications, 1995. Symposium, Sep. 20, 1995.
Gillespie , E. S., Glide slope antenna in the nose radome of the F-104 A and B, USAF Antenna Research and Development Program, 7th , 1957. Symposium on the, Oct. 21, 1957.
Gobien , A. T., Investigation of low profile antenna designs for use in hand-held radios—Master of Science, Virginia Polytechnic Institute and State University, Aug. 1, 2007.
Gough , C. E. ; Porch , A. ; Lancaster , M. J. et al, High Tc coplanar resonators for microwave applications and scientific studies, Physica C, Aug. 1, 1997, vol. 282-287, No. 2001, p. 395-398.
Graf, R, Modern dictionary of electronics, Butterworth-Heinemann (6th Ed.), Jan. 1, 1984, p. 209, 644.
Gray , D. ; Lu , J. W. ; Thiel , D. V., Electronically steerable Yagi-Uda microstrip patch antenna array, Antennas and Propagation, IEEE Transactions on, May 1, 1998, vol. 46.
Greiser , J. W. and Brown , G. S., A 500:1 scale model of warla : A wide aperture radio location array, USAF Antenna Research and Development Program, 13th , 1963. Symposium on the, Oct. 14, 1963.
Guo , Y., Miniature built-in multiband antennas for mobile handsets, Antennas and Propagation, IEEE Transactions on, Aug. 1, 2004, vol. 52, No. 8.
Guo , Y. X. ; Luk , K. F. Lee ; Chow , Y. L., Double U-slot rectangular patch antenna, Electronics Letters, Sep. 17, 1998.
Guo , Z., A VSLI implementation of MIMO detection for future wireless communications, Personal Indoor and Mobile Radio Communications (PIMRC), 14th , 2003. International Symposium on, Jan. 1, 2003.
Gupta , K. C., Broadbanding techniques for microstrip patch antennas—a review, Antenna Applications, 1988. Sysmposium, Sep. 21, 1988.
Gupta , K. C. ; Benalla , A., Microstrip antenna design, Artech House, Jan. 1, 1988.
Guterman , J., Dual-band miniaturized microstrip fractal antenna for a small GSM1800 + UMTS mobile handset, Melecon , IEEE, May 12, 2004.
Guterman , J. ; Moreira , A. ; Peixeiro , C., Two-elements multi-band fractal PIFA for MIMO applications in small size terminals, Antennas and Propagation Society (APS), 2004. IEEE International Symposium, Jun. 11, 2004.
Hagström , P., Novel ceramic antenna filters for GSM / DECT and GSM / PCN network terminals, Personal Indoor and Mobile Radio Communications (PIMRC), 8th , 1997. Waves of the year 2000. International Symposium on, Sep. 1, 1997.
Halloran , T. W., A dual channel VHF telemetry antenna system for re-entry vehicle applications, USAF Antenna Research and Development Program, 11th , 1961. Symposium on the, Oct. 16, 1961.
Hansen , R. C., Fundamental limitations in antennas, Proceedings of the IEEE, Feb. 1, 1981, vol. 69, No. 2, p. 170-182.
Infringement Chart—Samsung SGH-I907. U.S. Pat. No. 7,148,850, Fractus, Nov. 5, 2009.
Infringement Chart—Samsung SGH-I907. U.S. Pat. No. 7,202,822, Fractus, Nov. 5, 2009.
Infringement Chart—Samsung SGH-T219., Fractus, Nov. 5, 2009.
Infringement Chart—Samsung SGH-T219. U.S. Pat. No. 7,148,850, Fractus, Nov. 5, 2009.
Infringement Chart—Samsung SGH-T219. U.S. Pat. No. 7,202,822, Fractus, Nov. 5, 2009.
Infringement Chart—Samsung SGH-T239, Fractus, Nov. 5, 2009.
Infringement Chart—Samsung SGH-T239. U.S. Pat. No. 7,148,850, Fractus, Nov. 5, 2009.
Infringement Chart—Samsung SGH-T239. U.S. Pat. No. 7,202,822, Fractus, Nov. 5, 2009.
Infringement Chart—Samsung SGH-T559, Fractus, Nov. 5, 2009.
Infringement Chart—Samsung SGH-T559 Comeback. U.S. Pat. No. 7,148,850, Fractus, Nov. 5, 2009.
Infringement Chart—Samsung SGH-T559 Comeback. U.S. Pat. No. 7,202,822, Fractus, Nov. 5, 2009.
Infringement Chart—Samsung SGH-T639, Fractus, Nov. 5, 2009.
Infringement Chart—Samsung SGH-T639. U.S. Pat. No. 7,148,850, Fractus, Nov. 5, 2009.
Infringement Chart—Samsung SGH-T639. U.S. Pat. No. 7,202,822, Fractus, Nov. 5, 2009.
Infringement Chart—Samsung SGH-T739, Fractus, Nov. 5, 2009.
Infringement Chart—Samsung SGH-T739. U.S. Pat. No. 7,148,850, Fractus, Nov. 5, 2009.
Infringement Chart—Samsung SGH-T739. U.S. Pat. No. 7,202,822, Fractus, Nov. 5, 2009.
Infringement Chart—Samsung SGH-T819, Fractus, Nov. 5, 2009.
Infringement Chart—Samsung SGH-T819. U.S. Pat. No. 7,148,850, Fractus, Nov. 5, 2009.
Infringement Chart—Samsung SGH-T819. U.S. Pat. No. 7,202,822, Fractus, Nov. 5, 2009.
Infringement Chart—Samsung SGH-T929, Fractus, Nov. 5, 2009.
Infringement Chart—Samsung SGH-T929. U.S. Pat. No. 7,148,850, Fractus, Nov. 5, 2009.
Infringement Chart—Samsung SGH-T929. U.S. Pat. No. 7,202,822, Fractus, Nov. 5, 2009.
Infringement Chart—Samsung SGH A117, Fractus, Nov. 5, 2009.
Infringement Chart—Samsung SGH A117. U.S. Pat. No. 7,148,850, Fractus, Nov. 5, 2009.
Infringement Chart—Samsung SGH A117. U.S. Pat. No. 7,202,822, Fractus, Nov. 5, 2009.
Infringement Chart—Samsung SGH A127. U.S. Pat. No. 7,148,850, Fractus, Nov. 5, 2009.
Infringement Chart—Samsung SGH A127. U.S. Pat. No. 7,202,822, Fractus, Nov. 5, 2009.
Infringement Chart—Samsung SGH A437, Fractus, Nov. 5, 2009.
Infringement Chart—Samsung SGH A437. U.S. Pat. No. 7,148,850, Fractus, Nov. 5, 2009.
Infringement Chart—Samsung SGH A437. U.S. Pat. No. 7,202,822, Fractus, Nov. 5, 2009.
Infringement Chart—Samsung SGH A737, Fractus, Nov. 5, 2009.
Infringement Chart—Samsung SGH A737. U.S. Pat. No. 7,148,850, Fractus, Nov. 5, 2009.
Infringement Chart—Samsung SGH A737. U.S. Pat. No. 7,202,822, Fractus, Nov. 5, 2009.
Infringement Chart—Samsung SGH A867, Fractus, Nov. 5, 2009.

(56) **References Cited**

OTHER PUBLICATIONS

Infringement Chart—Samsung SGH A867. U.S. Pat. No. 7,148,850, Fractus, Nov. 5, 2009.
Infringement Chart—Samsung SGH A867. U.S. Pat. No. 7,202,822, Fractus, Nov. 5, 2009.
Infringement Chart—Samsung SGH T229, Fractus, Nov. 5, 2009.
Infringement Chart—Samsung SGH T229. U.S. Pat. No. 7,148,850, Fractus, Nov. 5, 2009.
Infringement Chart—Samsung SGH T229. U.S. Pat. No. 7,202,822, Fractus, Nov. 5, 2009.
Infringement Chart—Samsung SGH T439, Fractus, Nov. 5, 2009.
Infringement Chart—Samsung SGH T439. U.S. Pat. No. 7,148,850, Fractus, Nov. 5, 2009.
Infringement Chart—Samsung SGH T439. U.S. Pat. No. 7,202,822, Fractus, Nov. 5, 2009.
Infringement Chart—Samsung SGH T459, Fractus, Nov. 5, 2009.
Infringement Chart—Samsung SGH T459. U.S. Pat. No. 7,148,850, Fractus, Nov. 5, 2009.
Infringement Chart—Samsung SGH T459. U.S. Pat. No. 7,202,822, Fractus, Nov. 5, 2009.
Infringement Chart—Samsung SGH T919, Fractus, Nov. 5, 2009.
Infringement Chart—Samsung SGH T919. U.S. Pat. No. 7,148,850, Fractus, Nov. 5, 2009.
Infringement Chart—Samsung SGH T919. U.S. Pat. No. 7,202,822, Fractus, Nov. 5, 2009.
Infringement Chart—Samsung Spex R210a, Fractus, Nov. 5, 2009.
Hara Prasad , R. V., Microstrip fractal patch antenna for multiband communication, Electromagnetic Letters, IEEE, Jul. 6, 2000, vol. 36, No. 14, p. 1179-1180.
Harrington , R. F., Effect of antenna size on gain, bandwidth, and efficiency, Journal of Research of the National Bureau of Standards—D. Radio Propagation, Jan. 1, 1960, vol. 64D, No. 1.
Hart , N. ; Chalmers , A., Fractal element antennas, Digital Image Computer Techniques and Applications (DICTA) , Auckland, 1997., Jun. 2, 1997.
Hartwig , S. et al, Mobile multimedia—challenges and opportunities, Consumer Electronics (ICCE), 2000. IEEE International Conference on, Sep. 1, 2000.
Heberling , D. ; Geisser , M., Trends on handset antennas, Microwave Conference (EuMC), 29th , 1999. European, Mar. 3, 1999, vol. 1.
Heikkili , M., Increasing HSDPA throughput by employing space-time equalization, Personal Indoor and Mobile Radio Communications (PIMRC), 15th , 2004 International Symposium on, Sep. 5, 2004, vol. 4.
Henderson West , B, The Prentice-Hall encyclopedia of mathematics, Prentice-Hall, Jan. 1, 1982, p. 404-425.
Hikita , M. ; Shibagaki , N. ; Asal , K. et al, New miniature saw antenna duplexer used in GHz-band digital mobile cellular radios, Ultrasonics Symposium, IEEE, Nov. 7, 1995.
Hikita , M. et al, Miniature SAW antenna duplexer for 800-Mhz portable telephone used in cellular radio systems, Microwave Theory and Techniques, IEEE Transactions on, Jun. 1, 1988.
Hill , J. E. ; Bass , J. F., An integrated strip-transmission-line antenna system for J-band, USAF Antenna Research and Development Program, 23th , 1973. Symposium on the, Oct. 10, 1973.
Hofer , D. A. ; Kesler , Dr. O. B. ; Loyet , L. L., A compact multi-polarized broadband antenna, Antenna Applications, 1989. Symposium, Sep. 20, 1989.
Hoffmeister , M., The dual-frequency-inverted-F monopole antenna for mobile communications, N/A, Jan. 6, 1999.
Hohlfeld , R. G. ; Cohen N., Self-similarity and the geometric requirements for frequency independence in antennae, Fractals, Jan. 17, 1999, vol. 7, No. 1, p. 79-84.
Holtum , A. G., A dual frequency dual polarized microwave antenna, USAF Antenna Research and Development Program, 16th , 1966. Symposium on the, Oct. 11, 1966.
Holzschuh , D. L., Hardened antennas for atlas and titan missile site communications, USAF Antenna Research and Development Program, 13th , 1963. Symposium on the, Oct. 14, 1963.
Hong , J. S. ; Lancaster , M. J., Compact microwave elliptic function filter using novel microstrip meander open-loop resonators, Electronics Letters, Mar. 14, 1996, vol. 32, p. 563-564.
Hong , J. S. ; Lancaster , M. J., Recent advances in microstrip filters for communications and other applications, Advances in Passive Microwave Components, 1997. IEE Colloquium on, May 22, 1997.
Huang , C. ; Wu , J. Y. ; Wong , K. L., Cross slot coupled microstrip antenna and dielectric resonator antenna for circular polarization, Antennas and Propagation, IEEE Transactions on, Apr. 1, 1999.
Huang , Q. ; Lorch , J. R. ; Dubes , R., Can the fractal dimension of images be measured?, Pattern Recognition, Feb. 1, 1994, vol. 27.
Huynh , T. ; Lee , K. F., Single-layer single-patch wideband microstrip antenna, Electronics Letters, Aug. 3, 1995, vol. 31.
Hyneman , R. F. ; Mayes , P. E. ; Becker , R. C., Homing antennas for aircraft (450-2500 MC), USAF Antenna Research and Development Program, 5th , 1955. Symposium on the, Oct. 16, 1955.
Ikata , O. ; Satoh , Y. ; Uchishiba , H. et al., Development of small antenna duplexer using saw filters for handheld phones, Ultrasonics Symposium, IEEE, Oct. 31, 1993.
Ingerson , P. G. ; Mayes , P. E., Asymmetrical feeders for log-periodic antennas, USAF Antenna Research and Development Program, 17th , 1967. Symposium on the, Nov. 14, 1967.
Isbell , D. E., Multiple terminal log-periodic antennas, USAF Antenna Research and Development Program, 8th , 1958. Symposium on the, Oct. 20, 1958.
Isbell , D. E., Non-planar logarithmically periodic antenna structures, USAF Antenna Research and Development Program, 7th , 1957. Symposium on the, Oct. 21, 1957.
Ishikawa , Y. ; Hattori , J. ; Andoh , M. et al., 800 MHz High Power Bandpass Filter Using TM Dual Mode Dielectric Resonators, Microwave Conference (EuMC), 21st , 1991. European, Sep. 9, 1991, vol. 2.
Iwasaki , H., A circularly polarized small size microstrip antenna with a cross slot, Antennas and Propagation, IEEE Transactions on, Oct. 1, 1996.
Jaggard , D. L., Diffraction by Bandlimited Fractal Screens, Journal of the Optical Society of America, Jun. 1, 1987, vol. 4, No. 6.
Jaggard , D. L., Fractal electrodynamics and modeling, Directions in electromagnetic wave modeling, Jan. 1, 1991, p. 435-446.
James , J. R. ; Hall , P. S., Handbook of microstrip antennas, Peter Peregrinus Ltd., Jan. 1, 1989, vol. 1, pp. 3-4 , 205-207.
Jang , B. et al, Internal antenna design for a triple band using an overlap of return loss, Kyungpook National University, Jan. 1, 2006.
Jing , X., Compact planar monopole antenna for multi-band mobile phones, Microwave Conference (APMC), 2005. Asia-Pacific, Dec. 1, 2005, vol. 4.
Johnson , R. C., Antenna engineering handbook—Table of contents, McGraw-Hill, Jan. 1, 1993.
Jones , H. S., Conformal and Small antenna designs, Proceedings of the Antennas Applications Symposium, Aug. 1, 1981.
Jones , W. D. et al., WI-Fi hotspot networks sprout like mushrooms, Spectrum, IEEE, Sep. 1, 2002.
Katsibas , K. D. ; Balanis , C. A. ; Panayiotis , A. T. ; Birtcher , C. R., Folded loop antenna for mobile hand-held units, Antennas and Propagation, IEEE Transactions on, Feb. 1, 1998, vol. 46, No. 2.
Kawitkar , R. S., Design of smart antenna testbed prototype, Antennas, Propagation and EM Theory (ISAPE), 6th. , 2003. International Symposium on, Oct. 28, 2003.
Kim , W. et al., Internal dual-band low profile antenna for T-DMB/UHF mobile handset applications, Antennas and Propagation Society (APS), 2006. IEEE International Symposium, Jul. 9, 2006.
Kim, S. M. et al., Design and implementation of dual wideband sleeve dipole type antenna for the reception of S-DMB and 2.4/5GHZ WLAN signals, Antennas and Propagation Society (APS), 2006. IEEE International Symposium, Jul. 9, 2006.
Kobayashi , K., Estimation of 3D fractal dimension of real electrical tree patterns, Properties and Applications of Dielectric Materials, 4th , 1994. International Conference on, Jul. 1, 1994.
Kokotoff , D. M. ; Aberle , J. T. ; Waterhouse , R. B., Rigorous analysis of probe fed printed annular ring antennas, Antennas and Propagation, IEEE Transactions on, Feb. 1, 1999.
Kraus , J. D., Antennas, McGraw-Hill Book Company, Jan. 1, 1988, p. Contents.

(56) **References Cited**

OTHER PUBLICATIONS

Kraus , J. D., Antennas—Chapter 8, McGraw-Hill, Jan. 1, 1988, Chapter 8 : 340-359.
Krikelis , A., Considerations for a new generation of mobile multimedia communication systems, Concurrency, IEEE, Apr. 1, 2000, vol. 8, No. 2.
Krikelis , A., Mobile multimedia considerations, Concurrency, IEEE, Oct. 1, 1999.
Kritikos , H.N. ; Jaggard , D. L., Recent advances in electromagnetic theory—Chapter 6 on fractal electrodynamics, Springer, Oct. 1, 1990, Chapter 6.
Kuhlman , E. A., A directional flush mounted UHF communications antenna for high performance jet aircraft for the 225-400 MC frequency range, USAF Antenna Research and Development Program, 5th , 1955. Symposium on the, Oct. 1, 1955.
Kumar , G. ; Gupta , K., Nonradiating edges and four edges gap-coupled multiple resonator broadband microstrip antennas, Antennas and Propagation, IEEE Transactions on, Feb. 1, 1985.
Kumar , G. ; Gupta , K., Directly coupled multiple resonator wide-band microstrip antennas, Antennas and Propagation, IEEE Transactions on, Jun. 6, 1985, vol. AP-33.
Kumar Bisoi , A. ; Mishra , J., On calculation of fractal dimension of images, Pattern Recognition Letters, May 1, 2001, vol. 22.
Transcript of jury trial before the Honorable Leonard Davis US District Judge—May 17, 2011—8:00 AM, Court, May 17, 2011.
Transcript of jury trial before the Honorable Leonard Davis, US District Judge—May 17, 2011—1:10 PM, Court, May 17, 2011.
Transcript of pretrial hearing before the Honorable Leonard Davis, US District Judge—May 16, 2011—2:00 PM, Court, May 16, 2011.
CN00818542—Response to Office Action dated on Nov. 5, 2004, Herrero & Asociados, Mar. 31, 2005.
CN01823716—Office action dated on Feb. 16, 2007, CN-PTO, Feb. 16, 2007.
CN01823716—Response to the office action dated on Feb. 16, 2007, CN-PTO, Aug. 21, 2007.
CN01823716—Response to the office action dated on Sep. 21, 2007, CN-PTO, Dec. 3, 2007.
EP00909089—Claims, Herrero & Asociados, Jan. 28, 2005.
EP00909089—Minutes from Oral Proceedings, EPO, Jan. 28, 2005.
EP00909089—Office Action dated on Feb. 7, 2003, EPO, Feb. 7, 2003.
EP00909089—Response to Office Action dated on Feb. 7, 2003, Herrero & Asociados, Aug. 14, 2003.
EP00909089—Sunumons to attend oral proceedings, EPO, Oct. 28, 2004.
EP00909089—Written submissions, Herrero & Asociados, Dec. 15, 2004.
EP05012854—Communication of the board of appeal, EPO, Dec. 30, 2010.
EP05012854—Decision of the Technical Board of Appeal of the European Patent Office dated Apr. 20, 2012, EPO, Apr. 20, 2012.
PCT/EP00/00411—International preliminary examination report dated on Aug. 29, 2002—Notification concerning documents transmitted, EPO, Aug. 29, 2002.
PCT/EP00/00411—Invitation to restrict or to pay additional fees dated on Mar. 5, 2002, EPO, Mar. 5, 2002.
PCT/ES99/00296—Reply to the Written Opinion dated on Nov. 15, 2001—Declaration of J. Baxter—Exhibit FFF—, Herrero & Asociados, Nov. 15, 2001.
U.S. Appl. No. 10/102,568—Amendment and response to the Office Action dated on Jan. 23, 2004, Jones Day, May 26, 2004.
U.S. Appl. No. 10/102,568—Office Action dated on Jan. 23, 2004, USPTO, Jan. 23, 2004.
U.S. Appl. No. 10/102,568—Preliminary Amendment—Exhibit CCCC, Rosenman & Colin LLP, Mar. 18, 2002.
U.S. Appl. No. 10/181,790—Office action dated on Aug. 4, 2005, USPTO, Aug. 4, 2005.
U.S. Appl. No. 10/181,790—Office action dated on Aug. 27, 2004, USPTO, Aug. 27, 2004.
U.S. Appl. No. 10/181,790—Office action dated on Jun. 2, 2005, USPTO, Jun. 2, 2005.
U.S. Appl. No. 10/181,790—Office action dated on Mar. 2, 2005, USPTO, Mar. 2, 2005.
U.S. Appl. No. 10/181,790—Response to office action dated on Aug. 27, 2004, Jones Day, Dec. 8, 2004.
U.S. Appl. No. 10/181,790—Response to the office action dated on Jun. 2, 2005, Jones Day, Jul. 20, 2005.
U.S. Appl. No. 10/181,790—Response to the office action dated on Mar. 2, 2005, Jones Day, Mar. 14, 2005.
U.S. Appl. No. 10/182,635—Amendment and response to office action dated on Dec. 13, 2004, Jones Day, Mar. 17, 2005.
U.S. Appl. No. 10/182,635—Amendment and response to office action dated on Oct. 4, 2004, Jones Day, Nov. 12, 2004.
U.S. Appl. No. 10/182,635—Notice of Allowance dated on Apr. 11, 2005, USPTO, Apr. 11, 2005.
U.S. Appl. No. 10/182,635—Office Action dated on Dec. 13, 2004, USPTO, Dec. 13, 2004.
U.S. Appl. No. 10/182,635—Office action dated on Oct. 4, 2004, USPTO, Oct. 4, 2004.
U.S. Appl. No. 10/371,676—Amendment and response to final rejection dated on Oct. 6, 2001, Kyocera, Dec. 3, 2004.
U.S. Appl. No. 10/422,578—Advisory Action before the filing of an Appeal Brief, USPTO, Jun. 23, 2005.
U.S. Appl. No. 10/422,578—Office Action dated on Apr. 7, 2005, USPTO, Apr. 7, 2005.
U.S. Appl. No. 10/422,578—Office Action dated on Aug. 23, 2007, USPTO, Aug. 23, 2007.
U.S. Appl. No. 10/422,578—Office Action dated on Aug. 24, 2005, USPTO, Aug. 24, 2005.
U.S. Appl. No. 10/422,578—Office Action dated on Jan. 26, 2006, USPTO, Jan. 26, 2006.
U.S. Appl. No. 10/422,578—Office Action dated on Mar. 12, 2007, USPTO, Mar. 12, 2007.
U.S. Appl. No. 10/422,578—Office action dated on Mar. 26, 2008, USPTO, Mar. 26, 2008.
U.S. Appl. No. 10/422,578—Office Action dated on Oct. 4, 2004, USPTO, Oct. 4, 2004.
U.S. Appl. No. 10/422,578—Request for Continued Examination with response to the office action dated on Apr. 7, 2005 and the advisory action dated on Jun. 23, 2005, Jones Day, Aug. 8, 2005.
U.S. Appl. No. 10/422,578—Response to the Office Action dated on Apr. 7, 2005, Jones Day, May 31, 2005.
U.S. Appl. No. 10/422,578—Response to the Office Action dated on Oct. 4, 2004, Jones Day, Jan. 6, 2005.
U.S. Appl. No. 10/422,578—Response to the Office Action mailed on Jan. 26, 2006 and Advisory Action mailed on Mar. 29, 2006, Jones Day, May 1, 2006.
U.S. Appl. No. 10/797,732—Office action dated on Aug. 9, 2007, USPTO, Aug. 9, 2007.
U.S. Appl. No. 10/797,732—Response to Office Action dated Aug. 9, 2007, Winstead, Nov. 8, 2007.
U.S. Appl. No. 10/822,933—Notice of allowance dated on Oct. 18, 2007, USPTO, Oct. 18, 2007.
U.S. Appl. No. 10/822,933—Office Action dated on Oct. 5, 2006, USPTO, Oct. 5, 2006.
Bushman , F. W., The boeing B-52 all flush antenna system, USAF Antenna Research and Development Program, 5th , 1955. Symposium on the, Oct. 16, 1955.
Cabedo , A., Antenas multibanda para aplicaciones 2G, 3G, WiFi, WLAN y Bluetooth en terminales móviles de nueva generación, Fractus & La Salle, Oct. 1, 2006.
Campi , M., Design of microstrip linear array antennas, Antenna Applications, 1981. Symposium, Aug. 8, 1981.
Campos , O., Multiband and miniature fractal antennas study : Estudi d'antenes fractal multibanda i en miniatura, Universitat Politecnica de Catalunya (UPC), Jan. 1, 1998.
Carver , K. R. et al., Microstrip antenna technology, Antennas and Propagation, IEEE Transactions on, Jan. 1, 1981, vol. AP29, No. 1.
Carver , K. R. et al., Microstrip antenna technology, in "Microstrip antennas" to D.M. Pozar; IEEE Antennas and Propagation Society, Jan. 1, 1995, p. 3-26.

(56) **References Cited**

OTHER PUBLICATIONS

Caswell , W. E., Invisible errors in dimensions calculations: geometric and systematic effects, Dimensions and Entropies in Chaotic Systems, Jan. 1, 1986, p. 123-136.
Chang , J. et al, Hybrid fractal cross antenna, Microwave and Optical Technology Letters, Jun. 20, 2000.
Chen , H., Dual frequency microstrip antenna with embedded reactive loading, Microwave and Optical Technology Letters, Nov. 5, 1999, vol. 23, No. 3.
Chen , H., On the circular polarization operation of annular-ring microstrip antennas, Antennas and Propagation, IEEE Transactions on, Aug. 1, 1999.
Chen , M.H., A compact EHF/SHF dual frequency antenna, Antennas and Propagation Society (APS), 1990. IEEE International Symposium, May 7, 1990, vol. 4.
Chen , S. et al., On the calculation of Fractal features from images, Pattern Analysis and Machine Intelligence, IEEE Transactions on, Oct. 1, 1993, vol. 15, No. 10.
Chen , W. S., Small circularly polarized microstrip antennas, Antennas and Propagation Society (APS), 1999. IEEE International Symposium, Jul. 11, 1999.
Chen , W. S., Square-ring microstrip antenna with a cross strip for compact circular polarization operation, Antennas and Propagation, IEEE Transactions on, Oct. 1, 1999.
Chen , X. ; Ying , Z., Small Antenna Design for Mobile Handsets (part I), Sony Ericsson, Mar. 25, 2009.
Cherry , S., A match made in packets, Spectrum, IEEE, Jul. 1, 2005.
Chiba , N. et al, Dual frequency planar antenna for handsets, Electronics Letters, Dec. 10, 1998.
Chien , S. et al, Planar inverted-F antenna with a hollow shorting cylinder for internal mobile phone antenna, Antennas and Propagation Society (APS), 2004. IEEE International Symposium, Jun. 20, 2004.
Cho , Y. J., A wideband internal antenna with dual monopole radiation elements, Antennas and Wireless Propagation Letters, IEEE, Jan. 1, 2005, vol. 4.
Chow , Y. W. et al., An innovative monopole antenna for mobile phone handsets, Microwave and Optical Technology Letters, Apr. 20, 2000.
Chu , L. J., Physical limitations of omni-directional antennas, Journal of Applied Physics, Dec. 1, 1948.
Cimini , L. J. et al, Advanced cellular internet services (ACIS), Communication Magazine, IEEE, Oct. 1, 1998.
Clawson , J. et al., The impacts of limited visual feedback on mobile text entry for the twiddler and mini-QWERTY keyboards, Wereable Computers, 9th , 2005. International Symposium on, Jan. 1, 2005.
Cohen , N., Fractal and shaped dipoles - Some simple fractal dipoles, their benefits and limitations, Communications Quarterly, Mar. 1, 1996.
Cohen , N., Fractal antenna applications in wireless telecommunications, Electronics Industries Forum of New England, 1997. IEEE Professional Program Proceedings, May 6, 1997, p. 43-49.
Cohen , N., Fractal antennas—Part 1—Introduction and the fractal quad, Communications Quarterly, Jul. 1, 1995.
Cohen , N., Fractal antennas—Part 2—A discussion of relevant, but disparate, qualities, Communications Quarterly, Jul. 1, 1996.
Cohen , N., Fractal element antennas, Journal of Electronic Defense, Jul. 1, 1997.
Cohen , N., NEC4 analysis of a fractalized monofiliar helix in an axial mode, Wireless Communications and Applied Computational Electromagnetics (ACES), 1998. IEEE International Conference on, Apr. 1, 1998, p. 1051.
Cohen , N. ; Hohlfeld , R. G., Fractal loops and the small loop approximation—Exploring fractal resonances, Communications Quarterly, Dec. 1, 1996.
Cohn , S. B., Flush airborne radar antennas, USAF Antenna Research and Development Program, 3th , 1953. Symposium on the, Oct. 18, 1953.
Collander , P. ; Karlsson , M .; Salo , J. ; Haavisto , P. ; Laine-Ylijoki , T., Mobile multimedia communication, Electronic Manufacturing Technology, 18th, 1995. IEEE/CPMT Japan International Symposium, Dec. 4, 1995, p. 20-22.
Collier , C. P., Geometry for teachers, Waveland Press, Inc., Jan. 1, 1984.
Collier , D. ; Shnitkin , H., The monopole as a wideband array antenna element, Antenna Applications, 1993. Symposium, Sep. 22, 1993.
Counter , V. A., Flush, re-entrant, impedance phased, circularly polarized cavity antenna for missiles, USAF Antenna Research and Development Program, 2th , 1952. Symposium on the, Oct. 19, 1952.
Counter , V. A. ; Margerum , D. L., Flush dielectric disc antenna for radar, USAF Antenna Research and Development Program, 2th , 1952. Symposium on the, Oct. 19, 1952.
Cozza , R. et al, Nokia's E-Series brings PC management strategies to smartphones, Gartner, Jan. 1, 2006.
Cristal , E. G. et al, Hairpin-line and hybrid hairpin-line / Half-wave parallel-coupled-line filers, Microwave Theory and Techniques, IEEE Transactions on, Nov. 1, 1972.
Dailey Paulson , L., Low power chips for high powered handhelds, Computer, Jan. 1, 2003.
Daniel , A. E. ; Kumar , G., Rectangular microstrip antennas with stub along the non-radiating edge for dual band operation, Antennas and Propagation Society (APS), 1995. IEEE International Symposium, Jun. 18, 1995, vol. 4, p. 2136-2139.
Davidson , B. et al., MID wide band helix antenna for PDC diversity, Molded Interconnect Devices (MID), 1998, Feb. 2, 1998.
De la Vergne , H. J. et al, Market focus—Smartphones, Worldwide, 2005, Gartner, Dec. 5, 2005.
Debicki , P. S. et al., Calculating input impedance of electrically small insulated antennas for microwave hyperthermia, Microwave Theory and Techniques, IEEE Transactions on, Feb. 1, 1993.
Del Re , E. et al., Multiple antenna systems: frontier of wireless access, Personal Indoor and Mobile Radio Communications (PIMRC), 15th , 2004 International Symposium on, Sep. 5, 2004, vol. 2.
Deng , S. M., A t-strip loaded rectangular microstrip patch antenna for dual-frequency operation, Antennas and Propagation Society (APS), 1999. IEEE International Symposium, Jul. 1, 1999.
Deschamps , G., Microstrip Microwave Antenna, USAF Antenna Research and Development Program, 3th , 1953. Symposium on the, Oct. 18, 1953.
Desclos , L. et al., An interdigitated printed antenna for PC Card Applications, Antennas and Propagation, IEEE Transactions on, Sep. 1, 1998, vol. 46, No. 9.
Dickstein , H. D., Antenna system for a ground passive electronic reconnaissance facility, USAF Antenna Research and Development Program, 8th , 1958. Symposium on the, Oct. 20, 1958.
Du , Z. et al, A novel compact wide-band planar antenna for mobile handsets, Antennas and Propagation, IEEE Transactions on, Feb. 1, 2006.
Du Plessis , M. ; Cloete , J. H., Tuning stubs for microstrip patch antennas, Antennas and Propagation Society (APS), 1993. IEEE International Symposium, Jun. 28, 1993, vol. 2, p. 964-967.
Russell , D. A. et al., Dimension of strange attractors, Physical Review, Oct. 6, 1980, vol. 45, No. 14.
Samavati , H. ; Hajimiri , A. et al, Fractal capacitors, Solid State Circuits, IEEE Journal of, Dec. 1, 1998, vol. 33, No. 12, p. 2035-2041.
Sanad , M., A compact dual broadband microstrip antenna having both stacked and planar parasitic elements, Antennas and Propagation Society (APS), 1996. IEEE International Symposium, Jul. 21, 1996, p. 6-9.
Sanchez Hernandez , D. et al, Analysis and design of a dual-band circularly polarized microstrip patch antenna, Antennas and Propagation, IEEE Transactions on, Feb. 1, 1995.
Sandlin , B. ; Terzouli , A. J., A genetic antenna desig for improved radiation over earth, Antenna Applications, 1997. Symposium, Sep. 17, 1997.

(56) **References Cited**

OTHER PUBLICATIONS

Sarkar , N., An efficient differential box-counting approach to compute fractal dimension of image, Systems, Man and Cybernetics, 1994. IEEE International Conference on, Jan. 3, 1994, vol. 24, No. 1.
Saunders , S. R., Antennas and Propagation for Wireless Communication Systems---Chapter 4, John Wiley & Sons, Jan. 1, 1999.
Sawaya , K. ; Ishizone , T. ; Mushiake , Y., A simplified Expression of Dyadic Green's Function for a Conduction Half Sheet (Sep. 1981), Antennas and Propagation, IEEE Transactions on, Sep. 1, 1981, vol. AP-29, No. 5.
Scharfman , W., Telemetry antennas for high altitude missiles, USAF Antenna Research and Development Program, 8th , 1958. Symposium on the, Oct. 20, 1958.
Schaubert , D. H. ; Chang , W. C. ; Wunsch , G. J., Measurement of phased array performance at arbitrary scan angles, Antenna Applications, 1994. Symposium, Sep. 21, 1994.
Sclater , N. ; Markus , J., McGraw-Hill Electronics Dictionary, Mc-Graw Hill, Jan. 1, 1997, p. 21, 35, 183, 263, 298, 300.
Seavey , J., C-band paste-on and floating ring reflector antennas, USAF Antenna Research and Development Program, 23th , 1973. Symposium on the, Oct. 10, 1973.
Shenoy , A. et al., Notebook satcom terminal technology development, Digital Satellite Communications, 10th , 1995. International Conference on, May 15, 1995.
Shibagaki , N., Saw antenna duplexer module using saw-resonator-coupled filter for PCN system, Ultrasonics Symposium, IEEE, Oct. 5, 1998, vol. 1.
Shibagaki , N. ; Sakiyama , K. ; Hikita , M., Miniature saw antenna duplexer module for 1.9GHz PCN systems using saw-resonator-coupled filters, Ultrasonics Symposium, IEEE, Oct. 5, 1998, vol. 1.
Shim , H. et al, Power saving in handheld multimedia systems using MPEG-21 digital item adaptation, Embedded Systems for Real-Time Multimedia (ESTImedia), 2nd , 2004. Workshop on, Nov. 1, 2004.
Shimoda , R. Y., A variable impedance ratio printed circuit balun, Antenna Applications, 1979. Symposium, Sep. 26, 1979.
Shnitkin , H., Analysis of log-periodic folded dipole array, Antenna Applications, 1992. Symposium, Sep. 10, 1992.
Simpson , R. et al., Mobile communications worldwide: glossary, methodology and definitions, 2006, Gartner, Apr. 3, 2006.
Simpson , T. L. et al, Equivalent circuits for electrically small antennas using LS-decomposition with the method of moments, Antennas and Propagation, IEEE Transactions on, Dec. 1, 1989.
Sinclair, G., Theory of models of electromagnetic systems, Proceedings of the IRE, Nov. 1, 1948.
Smith , G. S., Efficiency of electrically small antennas combined with matching networks, Antennas and Propagation, IEEE Transactions on, May 1, 1977.
Snow , W. L., Ku-band planar spiral antenna, USAF Antenna Research and Development Program, 19th , 1969. Symposium on the, Oct. 14, 1969.
Snow , W. L., UHF crossed-slot antenna and applications, USAF Antenna Research and Development Program, 13th , 1963. Symposium on the, Sep. 1, 1963.
So , P. et al, Box-counting dimension without boxes---Computing D0 from average expansion rates, Physical Review, Jul. 1, 1999, vol. 60, No. 1.
Song , C. T. P. et al, Multi-circular loop monopole antenna, Electronics Letters, Mar. 2, 2000.
Song, C. T. P., Fractal stacked monopole with very wide bandwidth, Electronics Letters, Jun. 1, 1999, vol. 35, p. 945-946.
Stabernack , B. ; Colln , G. von, An MPEG-4 video codec soc for mobile multi-media applications, Consumer Electronics (ICCE), 2003. IEEE International Conference on, Jun. 2, 2003.
Stang , P. F., Balanced flush mounted log-periodic antenna for aerospace vehicles—in Abstracts of the Twelfth Annual Symposium USAF antenna research, USAF Antenna Research and Development Program, 12th , 1962. Symposium on the, Oct. 16, 1962, vol. 1.
Strugatsky , A. et al, Multimode multiband antenna, Tactical Communications: Technology in Transition, 1992. Conference of, Apr. 28, 1992.
Stutzman , W. L. ; Thiele , G., Antenna theory and design, John Wiley and Sons, Jan. 1, 1981, p. 18, 36.
Stutzman , W. L. ; Thiele , G. A., Antenna theory and design, John Wiley and Sons, Jan. 1, 1998, p. 8-9 , 43-48, 210-219.
Stutzman , W. L. ; Thiele , G. A., Antenna theory and design—Chapter 5—Resonant Antennas: Wires and Patches, Wiley, Jan. 1, 1998, Chapter 5 p. 210.
Su , C., EMC internal patch antenna for UMTS operation in a mobile device, Antennas and Propagation, IEEE Transactions on, Nov. 1, 2005, vol. 53.
Taga , T., Performance analysis of a built-in planar inverted F antenna for 800 MHz band portable radio units, Journal on Selected Areas in Communications , IEEE, Jan. 1, 1987, vol. 5, No. 5.
Tai , C. T ; Long , S., Antenna engineering handbook—Chapter 4—Dipoles and Monopoles, Johnson , R. Mc Graw Hill---(3rd Ed.), Jan. 1, 1993, p. 4-26-4-33.
Tanaka , Y., Fundamental features of perpendicular magnetic recording and the design consideration for future portable HDD integration, Magnetics, IEEE Transactions on, Oct. 3, 2005, vol. 41, No. 10.
Tang , C. et al, Small circular microstrip antenna with dual-frequency operation, Electronics Letters, Jun. 19, 1997.
Tang , Y., The application of fractal analysis to feature extraction, IEEE, Jan. 1, 1999.
Tanidokoro , H. ; Konishi , N. et al, I-wavelength loop dielectric chip antennas, Antennas and Propagation, IEEE Transactions on, Jan. 1, 1998.
Tanner , R. L. ; O'Reilly , G. A., Electronic counter measure antennas for a modern electronic reconnaissance aircraft, USAF Antenna Research and Development Program, 4th , 1954. Symposium on the, Oct. 17, 1954.
Teeter , W. L. ; Bushore , K. R., A variable-ratio microwave power divider and multiplexer, Microwave Theory and Techniques, IEEE Transactions on, Oct. 1, 1957.
Teng , P. L. ; Wong , K. L., Planar monopole folded into a compact structure for very-low-profile multiband mobile-phone antenna, Microwave and Optical Technology Letters, Apr. 5, 2002.
Terman , F. E., Radio engineering, McGraw-Hill Book Company, Inc., Jan. 1, 1947, p. 73-74, 690-691, 730.
The Glenn L. Martin Company, Antennas for Usaf B-57 series bombers, USAF Antenna Research and Development Program, 2th , 1952. Symposium on the, Oct. 19, 1952.
Theiler , J., Estimating fractal dimension, Journal of the Optical Society of America (JOSA), Jun. 1, 1990, vol. 7, No. 6, p. 1055-1073.
Tsachtsiris , G. et al., Analysis of a modified sierpinski gasket monopole antenna printed on dual band wireless devices, Antennas and Propagation, IEEE Transactions on, Oct. 1, 2004, vol. 52, No. 10.
Turner , E. M., Broadband passive electrically small antennas for TV application, Antenna Applications, 1977. Symposium, Apr. 27, 1977.
Turner , E. M. ; Richard , D. J., Development of an electrically small broadband antenna, USAF Antenna Research and Development Program, 18th , 1968. Symposium on the, Oct. 15, 1968.
Van Antwerpen , H. et al, Energy-aware system design for wireless multimedia, Design, Automation and Test, 2003. Europe Conference and Exhibition, Feb. 1, 2004.
U.S. Appl. No. 10/822,933—Response to Office Action dated on Oct. 5, 2006, Jenkens & Gilchrist, Jan. 4, 2007.
U.S. Appl. No. 10/963,080—Notice of allowance dated on Sep. 1, 2005., USPTO, Sep. 1, 2005.
U.S. Appl. No. 10/963,080—Preliminary amendment—Declaration of J. Baxter—Exhibit W, Jones Day, Dec. 10, 2004.
U.S. Appl. No. 11/021,597---Office action dated Oct. 30, 2007, USPTO, Oct. 30, 2007.
U.S. Appl. No. 11/021,597—Office Action dated on Mar. 12, 2007, USPTO, Mar. 12, 2007.
U.S. Appl. No. 11/021,597—Response to the Office Action dated Mar. 12, 2007, Winstead, Aug. 9, 2007.

(56) **References Cited**

OTHER PUBLICATIONS

U.S. Appl. No. 11/021,597—Response to the office action dated Oct. 30, 2007, Winstead, Dec. 28, 2007.
U.S. Appl. No. 11/033,788—Response to Office Action dated Feb. 7, 2006, Jenkens & Gilchrist, Jun. 1, 2006.
U.S. Appl. No. 11/102,390—Notice of allowance dated on Jul. 6, 2006., USPTO, Jun. 25, 2006.
U.S. Appl. No. 11/110,052—Notice of Allowance dated on Mar. 29, 2006, USPTO, Mar. 31, 2006.
U.S. Appl. No. 11/110,052—Notice of Allowance dated on May 30, 2006, USPTO, May 30, 2006.
U.S. Appl. No. 11/110,052—Preliminary amendment dated on Apr. 18, 2005, Howison & Arnott, Apr. 18, 2005.
U.S. Appl. No. 11/124,768—Amendment in response to non-final office action dated Aug. 23, 2006, Jenkens & Gilchrist, Nov. 13, Nov. 13, 2006.
U.S. Appl. No. 11/154,843—Amendment and response to office action dated Aug. 2, 2006, Howison & Arnott, Aug. 11, 2006.
U.S. Appl. No. 11/154,843—Notice of Allowance dated on Oct. 24, 2006, USPTO, Oct. 24, 2006.
U.S. Appl. No. 11/154,843—Office Action dated on Aug. 2, 2006, USPTO, Aug. 2, 2006.
U.S. Appl. No. 11/154,843—Office action dated on May 9, 2006, USPTO, May 9, 2006.
U.S. Appl. No. 11/179,250—Notice of Allowance dated on Jan. 20, 2007, USPTO, Jan. 26, 2007.
U.S. Appl. No. 11/179,250—Response office action, Howison & Arnott, Jul. 12, 2005.
U.S. Appl. No. 11/179,257—Notice of allowance dated on Oct. 19, 2006, USPTO, Oct. 19, 2006.
U.S. Appl. No. 11/550,256—Office Action dated on Jan. 15, 2008, USPTO, Jan. 15, 2008.
U.S. Appl. No. 11/614,429—Office Action dated on Aug. 16, 2010, USPTO, Aug. 16, 2010.
U.S. Appl. No. 11/614,429—Office Action dated on Mar. 7, 2011, USPTO, Mar. 7, 2011.
U.S. Appl. No. 11/614,429—Office action dated on Mar. 19, 2013, USPTO, Mar. 19, 2013.
U.S. Appl. No. 11/614,429—Office Action dated on May 27, 2011., USPTO, May 27, 2011.
U.S. Appl. No. 11/614,429—Response to the Final Office Action dated on May 27, 2011, Winstead, Nov. 23, 2011.
U.S. Appl. No. 11/614,429—Response to the Office Action dated on Aug. 16, 2010, Winstead, Feb. 11, 2011.
U.S. Appl. No. 11/686,804—Amendment and response to office action dated Apr. 15, 2008, Howison & Arnott, Jul. 9, 2008.
U.S. Appl. No. 11/686,804—Notice of Allowance dated on Sep. 9, 2008, USPTO, Sep. 9, 2008.
U.S. Appl. No. 11/686,804—Office action dated on Apr. 15, 2008., USPTO, Apr. 15, 2008.
U.S. Appl. No. 11/780,932—Preliminary amendment dated on Jul. 20, 2007, Howison & Arnott, Jul. 20, 2007.
U.S. Appl. No. 12/309,463—Amendment after final action, Winstead, May 23, 2012.
U.S. Appl. No. 12/309,463—Office action, USPTO, Mar. 28, 2012.
U.S. Appl. No. 12/309,463—Office action dated on Aug. 4, 2011, USPTO, Aug. 4, 2011.
U.S. Appl. No. 12/309,463—Response to non-final office action dated on Aug. 4, 2011, Winstead, Jan. 23, 2012.
U.S. Appl. No. 12/347,462—Amendment and response to office action dated Oct. 28, 2009, Howison & Arnott, Mar. 15, 2010.
U.S. Appl. No. 12/347,462—Amendment and response to office action dated on Dec. 7, 2011, Howison & Arnott, Apr. 3, 2012.
U.S. Appl. No. 12/347,462—Notice of allowance dated on Apr. 13, 2012, USPTO, Apr. 13, 2012.
U.S. Appl. No. 12/347,462—Notice of Allowance dated on Apr. 19, 2010, USPTO, Apr. 19, 2010.
U.S. Appl. No. 12/347,462—Notice of Allowance dated on Jun. 29, 2010, USPTO, Jun. 29, 2010.
U.S. Appl. No. 12/347,462—Notice of Allowance dated on May 18, 2009, USPTO, May 18, 2009.
U.S. Appl. No. 12/347,462—Office Action dated on Dec. 7, 2011, USPTO, Dec. 7, 2011.
U.S. Appl. No. 12/347,462—Office Action dated on Oct. 28, 2009, USPTO, Oct. 28, 2009.
U.S. Appl. No. 12/498,090—Amendment and response to office action dated Dec. 30, 2011, Howison & Arnott, Apr. 3, 2012.
U.S. Appl. No. 12/498,090—Notice of allowance dated on Apr. 13, 2012, USPTO, Apr. 13, 2012.
U.S. Appl. No. 12/498,090—Notice of Allowance dated on Mar. 10, 2011, USPTO, Mar. 10, 2011.
U.S. Appl. No. 12/498,090—Office Action dated on Aug. 18, 2010, USPTO, Aug. 18, 2010.
U.S. Appl. No. 12/498,090—Office action dated on Dec. 30, 2011, USPTO, Dec. 30, 2011.
U.S. Appl. No. 12/498,090—Response to office action dated on Aug. 18, 2010, Howison & Arnott, Jan. 17, 2011.
U.S. Appl. No. 13/020,034—Amendment and response to office action dated on Nov. 8, 2011, Howison & Arnott, Apr. 3, 2012.
Kuo , S., Frequency-independent log-periodic antenna arrays with increased directivity and gain, USAF Antenna Research and Development Program, 21th , 1971. Symposium on the, Oct. 12, 1971.
Kurpis , G. P., The New IEEE standard dictionary of electrical and electronics terms, IEEE Standards, Jan. 1, 1993, p. 90, 352, 393.
Kutter , R. E., Fractal antenna design, University of Dayton, Jan. 1, 1996.
Kyriacos , S. ; Buczkowski , S. et al., A modified box-counting method, Fractals, Jan. 1, 1994, vol. 2, No. 2, p. 321-324.
Ladebusch , U. ; Liss , C., Terrestrial DVB (DVB-T): a broadcast technology for stationary portable and mobile use, Proceedings of the IEEE, Jan. 1, 2006, vol. 94, No. 1.
Lam , K. W. ; Yung , E. K. N., A novel leaky wave antenna for the base station in an innovative indoors cellular mobile communication system, Antennas and Propagation Society (APS), 1999. IEEE International Symposium, Jul. 11, 1999.
Lancaster , M. J. et al, Superconducting filters using slow-wave transmission lines, Advances in Superconductivity, 8th , New Delhi, 1996. International Symposium on, Jan. 1, 1996.
Lancaster , M. J. et al., Miniature superconducting filters, Microwave Theory and Techniques, IEEE Transactions on, Jul. 1, 1996.
Larson , J., A BAW Antenna Duplexer for the 1900 MHz PCS Band, Ultrasonics Symposium, IEEE, Oct. 17, 1999.
Larson , L., Radio frequency integrated circuit technology for low-power wireless communications, Personal Communications, IEEE, Jun. 1, 1998.
Lauwerier , H., Fractals. Endlessly repeated geometrical figures, Princeton University Press, Jan. 1, 1991, vol. Chapters 1, 3 and 5 for Space-filling.
Lee , C. S., Planar circularly polarized microstrip antenna with a single feed, Antennas and Propagation, IEEE Transactions on, Jun. 1, 1999.
Lee , C. S. ; Chen , P. W., Electrically small microstrip antennas, Antennas and Propagation Society (APS), 2000. EEE International Symposium, Jul. 7, 2000.
Lee , J. C., Analysis of differential line length diplexers and long-stub filters, USAF Antenna Research and Development Program, 21th , 1971. Symposium on the, Oct. 12, 1971.
Leisten , O. et al., Miniature dielectric-loaded personal telephone antennas with low user exposure, Electronics Letters, Aug. 20, 1998, vol. 34, No. 17.
Lettieri , P. et al, Advances in wireless terminals, Personal Communications, IEEE, Feb. 1, 1999.
Li, J. ; Du , Q. ; Sun , C., An improved box-counting method for image fractal dimension estimation, Pattern Recognition, Sep. 6, 2007, vol. 42.
Li, J. ; Sun , C. ; Du , Q., A New Box-Counting Method for Estimation of Image Fractal Dimension, Image Processing, 2006. IEEE International Conference on, Oct. 8, 2006.
Liu , D., A multi-branch monopole antenna for dual-band cellular applications, Antennas and Propagation Society (APS), 1999. IEEE International Symposium, Sep. 3, 1999, vol. 3.

(56) **References Cited**

OTHER PUBLICATIONS

Liu , S. T., An improved differential box-counting approach to compute fractal dimension of gray-level image, Information Science and Engineering (ISISE), 2008. International Symposium on, Mar. 4, 2008, vol. 1.
Liu , Z. D. ; Hall , P. S. ; Wake , D., Dual-frequency planar inverted-f antenna, Antennas and Propagation, IEEE Transactions on, Oct. 1, 1997.
Lo , T. K. ; Hwang , Y., Bandwidth enhancement of PIFA loaded with a very high permittivity material using FDTD, Antennas and Propagation Society (APS), 1998. IEEE International Symposium, Jun. 21, 1998.
Lo , Y. T. ; Solomon , D. ; Richards , W. F., Theory and experiment on microstrip antennas, Antenna Applications, 1978. Symposium, Sep. 20, 1978.
Locus , S. S., Antenna design for high performance missile environment, USAF Antenna Research and Development Program, 5th , 1955. Symposium on the, Oct. 16, 1955.
Lu , J. H., Slot-coupled small triangular microstrip antenna, Microwave and Optical Technology Letters, Dec. 20, 1997.
Lu , J. H. ; Tang , C. L. ; Wong , K. L., Novel dual-frequency and broad-band designs of slot-loaded equilateral triangular microstrip antennas, Antennas and Propagation, IEEE Transactions on, Jul. 1, 2000, vol. 48.
Lu , J. H. ; Tang , C. L. ; Wong , K. L., Single-feed slotted equilateral triangular microstrip antenna for circular polarization, Antennas and Propagation, IEEE Transactions on, Jul. 1, 1999.
Lu , J. H. ; Wong , K. L., Dual-frequency rectangular microstrip antenna with embedded spur lines and integrated reactive loading, Microwave and Optical Technology Letters, May 20, 1999, vol. 21.
Lu , J. H. ; Wong , K. L., Single-feed dual-frequency equilateral-triangular microstrip antenna with pair of spur lines, Electronics Letters, Jun. 11, 1998, vol. 34.
Lu , J. H. ; Yang , K. P, Slot coupled compact triangular microstrip antenna with lumped load, Antennas and Propagation Society (APS), 1998. IEEE International Symposium, Jun. 21, 1998.
Lu , J. H. et al., Slot-loaded, Meandered Rectangular Microstrip Antenna With Compact Dualfrequency Operation, Electronics Letters, May 28, 1998, vol. 34, No. 11.
Lyon , J. ; Rassweiler , G. ; Chen , C., Ferrite-loading effects on helical and spiral antennas, USAF Antenna Research and Development Program, 15th , 1965. Symposium on the, Oct. 12, 1965.
Maci , S. et al., Dual-band Slot-loaded patch antenna, Microwaves, Antennas and Propagation, IEE Proceedings H, Jun. 1, 1995, vol. 142, p. 225-232.
Maci , S. et al., Dual-frequency patch antennas, Antennas and Propagation Magazine, IEEE, Dec. 1, 1997.
Mahmoud , Q. H., Building wireless internet services—state of the art, Computer Systems and Applications (ACS), 2003. IEEE International Conference on, Jul. 14, 2003.
Mandelbrot , B. B., Opinions (Benoit B. Mandelbrot), World Scientific Publishing Company—Case 6:09-cv-00203-LED-JDL, Jan. 1, 1993.
Mandelbrot, B. B., The fractal geometry of nature, Freeman and Company, Jan. 1, 1982, p. 32-35.
Markopoupou , A. et al, Energy efficient communication in battery constrained portable devices, Broadband Networks (BroadNets), 2005. International Conference on, Oct. 1, 2005.
Martin , R. W. ; Stangel , J. J., An unfurlable, high-gain log-periodic antenna for space use, USAF Antenna Research and Development Program, 17th , 1967. Symposium on the, Nov. 14, 1967.
Martin, W. R., Flush vor antenna for c-121 aircraft, USAF Antenna Research and Development Program, 2th , 1952. Symposium on the, Oct. 19, 1952.
Martinez-Vazquez , M. et al., Integrated planar multiband antennas for personal communications handsets, Antennas and Propagation, IEEE Transactions on, Feb. 1, 2006, vol. 54, No. 2.
Matsushima et al, Electromagnetically coupled dielectric chip antenna, Antennas and Propagation, IEEE Transactions on, Jun. 1, 1998.
Matthaei , G. L., Microwave filters impedance-matching networks and coupling structures, Artech House, Jan. 1, 1980, p. 1096.
Matthaei , G. L. et al., Hairpin-comb filters for HTS and other narrow-band applications, Microwave Theory and Techniques, IEEE Transactions on, Aug. 1, 1997, vol. 45, No. 3.
May , M., Aerial magic, New Scientist, Jan. 31, 1998.
Mayes , P., Some broadband , low-profile antennas, Antenna Applications, 1985. Symposium, Sep. 18, 1985.
Mayes , P. E., High gain log-periodic antennas, USAF Antenna Research and Development Program, 10th , 1960. Symposium on the, Oct. 3, 1960.
Mayes , P. E., Multi-arm logarithmic spiral antennas, USAF Antenna Research and Development Program, 10th , 1960. Symposium on the, Oct. 3, 1960.
McCormick , J., A Low-profile electrically small VHF antenna, USAF Antenna Research and Development Program, 15th , 1965. Symposium on the, Oct. 12, 1965.
McDowell , E. P., Flush mounted X-band beacon antennas for aircraft, USAF Antenna Research and Development Program, 3th , 1953. Symposium on the, Oct. 18, 1953.
Helmberg , G., Getting acquainted with fractals, Walter de Gruyter, 2007, Preface, p. 50-53.
NA, Motorola P935, Motorola, Aug. 13, 1997.
NA, Nokia 3210, Nokia, Jan. 1, 1999.
NA, Nokia 3360, Nokia, May 3, 2001.
NA, Nokia 6233 and 6282 announced, GSM Arena, Dec. 1, 2005.
NA, Nokia 8210, Nokia, Jan. 1, 1999.
NA, Nokia 8260, Nokia, Sep. 8, 2000.
NA, Nokia 8260—FCC ID GMLNSW-4DX, Nokia, Apr. 1, 1999.
NA, Nokia 8265, Nokia, Mar. 4, 2002.
NA, Nokia 8810, Nokia, Jan. 1, 1998.
NA, Nokia 8850, Nokia, Jan. 1, 1999.
NA, Nokia 8860—External photos—OET Exhibits list for FCC ID: LJPNSW-6NX, Federal Communications Commission (FCC), Jul. 8, 1999.
NA, Nokia 8860—Internal photos—FCC ID: LJPNSW-6NX, Nokia and Federal Communications Commission (FCC), Jun. 24, 1999.
NA, Nokia N-Series—N91, N90 and N70, Gsm Arena, Apr. 27, 2005.
NA, Nokia N-Series—second wave, GSM Arena, Nov. 2, 2005.
NA, Pictures of Mobile handset telephones, Fractus SA, Feb. 22, 2007.
NA, RIM 857 pager, RIM, Oct. 1, 2000.
NA, RIM 950 product—Photos of, RIM, Jun. 30, 1998.
NA, RIM 957 page maker, RIM, Nov. 15, 2000.
NA, Rockwell B-1B Lancer, <http://home.att.net/~jbaugher2/newb1_2.html>, Oct. 12, 2001.
NA, Samsung at 3GSM 2006, GSM Arena, Feb. 13, 2006.
NA, Software—Box counting dimension [electronic], Sewanee—http://www.sewanee.edu/Physics/PHYSICS123/BOX%20COUNTING%20DIMENSION.html, Apr. 1, 2002.
NA, The American Century Dictionary, Oxford University Press, Jan. 1, 1995, p. 376, 448.
NA, The American Heritage College Dictionary, Houghton Mifflin Comp.—3d ed.—Case 6:09-cv-00203-LED-JDL, Jan. 1, 1997, p. 684 and 1060.
NA, The American Heritage Dictionary, Morris—William—(Second College edition)—Case 6:09-cv-00203-LED-JDL, Jan. 1, 1982, p. 817 , 961.
NA, The American Heritage Dictionary, New College ed. (2nd ed.), Jan. 1, 1982, p. 311, 1208.
NA, The handbook of antenna design—Index, Rudge, A. W. et al.—Peter Peregrinus—Institution of Electrical Engineers, Jan. 1, 1986, vol. 1-2.
NA, The Random House Dictionary, Random House, Jan. 1, 1984, p. 1029, 1034.
NA, United States Table of Frequency allocations—The Radio Spectrum, United States Department of Commerce, Mar. 1, 1996.
NA, Webster's New Collegiate Dictionary, G & C Merriam Co., Jan. 1, 1981, p. 60, 237, 746.
Nadan , T. ; Coupez , J. P., Integration of an antenna filter device, using a multi-layer, multi-technology process, Microwave Conference (EuMC), 28th , 1988. European, Oct. 1, 1988, vol. 1.

(56) **References Cited**

OTHER PUBLICATIONS

Nagai , K. ; Mikuni , Y. ; Iwasaki , H., A mobile radio antenna system having a self-diplexing function, Vehicular Technology (VTC), 29th , 1979. IEEE Conference, Nov. 1, 1979, vol. 28.
Nagy , L. L, Antenna engineering handbook—Chapter 39—Automobile antennas, Volakis , J.—McGraw-Hill; 4th edition, Jan. 1, 2007, Chapter 39.
Naik , A. ; Bathnagar , P. S., Experimental study on stacked ring coupled triangular microstrip antenna, Antenna Applications, 1994. Symposium, Sep. 21, 1994.
Nakano , H. ; Vichien , K., Dual-frequency square patch antenna with rectangular notch, Electronics Letters, Aug. 3, 1989. vol. 25.
Navarro , M., Original and translation in English of Final Degree Project—Diverse modifications applied to the Sierpinski antenna, a multi-band fractal antenna, Universitat Politecnica de Catalunya (UPC), Oct. 1, 1997.
Neary , D., Fractal methods in image analysis and coding, Dublin City University—www.redbrick.dcu.ie/*bolsh/thesis/node16.html and *node22.html, Jan. 22, 2001.
Nelson , T. R. ; Jaggard , D. L., Fractals in the Imaging Sciences, Journal of the Optical Society of America, Jan. 1, 1999.
Neuvo , Y. et al, Wireless meets multimedia—new products and services, Image Processing, 2002. IEEE International Conference on, Sep. 1, 2002.
Ng , V., Diagnosis of melanoma with fractal dimesions, TENCON, 1993. IEEE Conference, Jan. 1, 1993.
Nicol , C. ; Cooke , M., Integrated circuits for 3GPP mobile wireless systems, Custom Integrated Circuits, 2002. IEEE Conference, Jan. 1, 2002.
Nishikawa , T., Ishikawa , Y., Hattori , J. and Wakino , K., Dielectric receiving filter with Sharp stopband using an active feedback resonator method for cellular base stations, Microwave Theory and Techniques, IEEE Transactions on, Dec. 1, 1989, vol. 37.
Noguchi , K. et al, Broadbanding of a plate antenna with slits, Antennas and Propagation Society (APS), 2000. IEEE International Symposium, Jul. 16, 2000.
Offutt , W. ; DeSize , L. K., Antenna Egineering Handbook—Chapter 23—Methods of Polarization Synthesis, Johnson R. C.—McGraw Hill, Jan. 1, 1993, 3rd Ed.
Ohmine , H. et al., A TM mode annular-ring microstrip antenna for personal satellite communication use, IEICE Society, 1996. Conference of, Sep. 1, 1996, vol. E79, No. 9.
Omar, A. A. ; Antar , Y. M. M., A new broad band dual frequency coplanar waveguide fed slot antenna, Antennas and Propagation Society (APS), 1999. IEEE International Symposium, Jul. 11, 1999.
Ophir , L., Wi-Fi (IEEE802.11) and Bluetooth coexistence: issues and solutions, Personal Indoor and Mobile Radio Communications (PIMRC), 15th , 2004 International Symposium on, Jan. 1, 2004.
Ou , J. D., An analysis of annular, annular sector, and circular sector microstrip antennas, Antenna Applications, 1981. Symposium, Sep. 23, 1981.
Pahlavan , K. et al., Trends in local wireless data networks, Vehicular Technology (VTC), 46th , 1996. IEEE Conference, Apr. 28, 1996, vol. 1.
Palit , S. K. ; Hamadi , A. ; Tan , D., Design of a wideband dual-frequency notched microstrip antenna, Antennas and Propagation Society (APS), 1998. IEEE International Symposium, Jun. 1, 1998.
Pan, S. et al., Single-feed dual-frequency microstrip antenna with two patches, Antennas and Propagation Society (APS), 1999. IEEE International Symposium, Aug. 1, 1999.
Infringement Chart—Blackberry 8220. U.S. Pat. No. 7,202,822, Fractus, Nov. 5, 2009.
Infringement Chart—Blackberry 8310. U.S. Pat. No. 7,148,850, Fractus, Nov. 5, 2009.
Infringement Chart—Blackberry 8310. U.S. Pat. No. 7,202,822, Fractus, Nov. 5, 2009.
Infringement Chart—Blackberry 8320. U.S. Pat. No. 7,148,850, Fractus, Nov. 5, 2009.
Infringement Chart—Blackberry 8320. U.S. Pat. No. 7,202,822, Fractus, Nov. 5, 2009.
Infringement Chart—Blackberry 8330. U.S. Pat. No. 7,148,850, Fractus, Nov. 5, 2009.
Infringement Chart—Blackberry 8330. U.S. Pat. No. 7,202,822, Fractus, Nov. 5, 2009.
Infringement Chart—Blackberry 8820. U.S. Pat. No. 7,148,850, Fractus, Nov. 5, 2009.
Infringement Chart—Blackberry 8820. U.S. Pat. No. 7,202,822, Fractus, Nov. 5, 2009.
Infringement Chart—Blackberry 8830. U.S. Pat. No. 7,148,850, Fractus, Nov. 5, 2009.
Infringement Chart—Blackberry 8830. U.S. Pat. No. 7,202,822, Fractus, Nov. 5, 2009.
Infringement Chart—Blackberry 8900. U.S. Pat. No. 7,148,850, Fractus, Nov. 5, 2009.
Infringement Chart—Blackberry 8900. U.S. Pat. No. 7,202,822, Fractus, Nov. 5, 2009.
Infringement Chart—Blackberry 9630. U.S. Pat. No. 7,148,850, Fractus, Nov. 5, 2009.
Infringement Chart—Blackberry 9630. U.S. Pat. No. 7,202,822, Fractus, Nov. 5, 2009.
Infringement Chart—Blackberry Bold 9000. U.S. Pat. No. 7,148,850, Fractus, Nov. 5, 2009.
Infringement Chart—Blackberry Bold 9000. U.S. Pat. No. 7,202,822, Fractus, Nov. 5, 2009.
Infringement Chart—Blackberry Storm 9530. U.S. Pat. No. 7,148,850, Fractus, Nov. 5, 2009.
Infringement Chart—Blackberry Storm 9530. U.S. Pat. No. 7,202,822, Fractus, Nov. 5, 2009.
Infringement Chart—HTC Dash, Fractus, Nov. 5, 2009.
Infringement Chart—HTC Dash. U.S. Pat. No. 7,148,850, Fractus, Nov. 5, 2009.
Infringement Chart—HTC Dash. U.S. Pat. No. 7,202,822, Fractus, Nov. 5, 2009.
Infringement Chart—HTC Diamond, Fractus, Nov. 5, 2009.
Infringement Chart—HTC Diamond. U.S. Pat. No. 7,148,850, Fractus, Nov. 5, 2009.
Infringement Chart—HTC Diamond. U.S. Pat. No. 7,202,822, Fractus, Nov. 5, 2009.
Infringement Chart—HTC G1 Google., Fractus, Nov. 5, 2009.
Infringement Chart—HTC G1 Google. U.S. Pat. No. 7,148,850, Fractus, Nov. 5, 2009.
Infringement Chart—HTC G1 Google. U.S. Pat. No. 7,202,822, Fractus, Nov. 5, 2009.
Infringement Chart—HTC My Touch., Fractus, Nov. 5, 2009.
Infringement Chart—HTC My Touch. U.S. Pat. No. 7,148,850, Fractus, Nov. 5, 2009.
Infringement Chart—HTC My Touch. U.S. Pat. No. 7,202,822, Fractus, Nov. 5, 2009.
Infringement Chart—HTC Ozone, Fractus, Nov. 5, 2009.
Infringement Chart—HTC Ozone. U.S. Pat. No. 7,148,850, Fractus, Nov. 5, 2009.
Infringement Chart—HTC Ozone. U.S. Pat. No. 7,202,822, Fractus, Nov. 5, 2009.
Infringement Chart—HTC Pure, Fractus, Nov. 5, 2009.
Infringement Chart—HTC Pure. U.S. Pat. No. 7,148,850, Fractus, Nov. 5, 2009.
Infringement Chart—HTC Pure. U.S. Pat. No. 7,202,822, Fractus, Nov. 5, 2009.
Infringement Chart—HTC Snap, Fractus, Nov. 5, 2009.
Infringement Chart—HTC Snap. U.S. Pat. No. 7,148,850, Fractus, Nov. 5, 2009.
Infringement Chart—HTC Snap. U.S. Pat. No. 7,202,822, Fractus, Nov. 5, 2009.
Infringement Chart—HTC TILT 8925., Fractus, Nov. 5, 2009.
Infringement Chart—HTC TILT 8925. U.S. Pat. No. 7,148,850, Fractus, Nov. 5, 2009.
Infringement Chart—HTC TILT 8925. U.S. Pat. No. 7,202,822, Fractus, Nov. 5, 2009.
Infringement Chart—HTC Touch Pro 2, Fractus, Nov. 5, 2009.
Infringement Chart—HTC Touch Pro 2 CDMA. U.S. Pat. No. 7,148,850, Fractus, Nov. 5, 2009.

(56) **References Cited**

OTHER PUBLICATIONS

Infringement Chart—HTC Touch Pro 2. U.S. Pat. No. 7,202,822, Fractus, Nov. 5, 2009.
Infringement Chart—HTC Touch Pro Fuze, Fractus, Nov. 5, 2009.
Infringement Chart—HTC Touch Pro Fuze. U.S. Pat. No. 7,148,850, Fractus, Nov. 5, 2009.
Infringement Chart—HTC Touch Pro Fuze. U.S. Pat. No. 7,202,822, Fractus, Nov. 5, 2009.
Infringement Chart—HTC Touch Pro., Fractus, Nov. 5, 2009.
Detailed rejection of U.S. Appl. No. 12/347,462, Defendants, Jul. 1, 2010.
Document 0001—Complaint for patent infringement, Susman Godfrey, May 5, 2009.
Document 0014—Amended complaint for patent infringement, Fractus, May 6, 2009.
Document 0032—Defendants LG Electronics Mobilecomm USA., Inc.'s answer and counterclaim to complaint, Defendants, Oct. 1, 2009.
Document 0064—Defendant Pantech Wireless, Inc.'S answer, affirmative defenses and counterclaims to Fractus SA's Amended complaint, Defendants, Jun. 4, 2009.
Document 0066—Defendant UTStarcom, Inc's answer affirmative defenses and counterclaims to plaintiff's amended complaint, Defendants, Sep. 8, 2009.
Document 0073—Plaintiff Fractus SA's answer to defendant Pantech Wireless, Inc' s counterclaims, Defendants, Jun. 24, 2009.
Document 0079—Plaintiff Fractus SA's answer to defendant UTStarcom, Inc's counterclaims, Fractus, Jun. 29, 2009.
Document 0091—Answer, affirmative defenses and counterclaims to the amended complaint for patent infringement on behalf of Defendant Personal Communications Devices Holdings, LLC, Defendants, Jul. 20, 2009.
Document 0099—Defendant Sanyo North America Corporation's partial answer to amended complaint for patent Infringement, Defendants, Jul. 20, 2009.
Document 0106—Kyocera Communications Inc's answer, affirmative defenses and counterclaims to plaintiff's amended complaint, Defendants, Jul. 21, 2009.
Document 0107—Kyocera Wireless Corp's answer, affirmative defenses and counterclaims to plaintiff's amended complaint, Defendants, Jul. 21, 2009.
Document 0108—Palm Inc.'s answer, affirmative defenses and counterclaims to plaintiff's amended complaint, Defendants, Jul. 21, 2009.
Document 0111—Civil cover sheet, Susman Godfrey, May 5, 2009.
Document 0175—Defendant HTC Corporation's amended answer and counterclaim to plaintiff's second amended complaint, Defendants, Sep. 25, 2009.
Document 0176—Defendant HTC America Inc's answer and counterclaim to plaintiff's amended complaint, Defendants, Sep. 25, 2009.
Document 0180—Defendants Samsung Electronics Co., Ltd.'s; Samsung Electronics Research Institute's and Samsung Semiconductor Europe GMBH's answer, and Samsung Telecommunications America LLC's answer and counterclaim, Defendants, Oct. 1, 2009.
Document 0185—Defendants Research in Motion LTD, and Research in Motion Corporation's answers, defenses and counterclaims to plaintiff's amended complaint, Defendants, Oct. 1, 2009.
Document 0187—Defendants LG Electronics Inc., LG Electronics USA, Inc., and LG Electronics Mobilecomm USA Inc. answer and counterclaim to amended complaint, Defendants, Oct. 1, 2009.
Document 0190—Defendant HTC Corporation's First amended answer and counterclaim to plaintiff's amended complaint, Defendants, Oct. 2, 2009.
Document 0191—Defendant HTC America, Inc's first amended answer and counterclaims to plaintiff's amended complaint, Defendants, Oct. 2, 2009.
Document 0217—Defendants Research in Motion LTD, and Research in Motion Corporation's amended answer, defenses and counterclaims to plaintiff's amended complaint, Defendants, Nov. 24, 2009.
Document 0222—Second amended complaint for patent infringement, Susman Godfrey, Dec. 2, 2009.
Document 0227—Second amended complaint for patent infringement—Case 6:09-cv-00203, Fractus, Dec. 8, 2009.
Document 0235—Answer, affirmative defenses and counterclaims to the second amended complaint for patent infringement on behalf of Defendant Personal Communications Devices Holdings, LLC, Defendants, Dec. 17, 2009.
Document 0238—Defendant HTC America, Inc's answer and counterclaims to plaintiff's second amended complaint, Defendants, Dec. 21, 2009.
Document 0239—Defendant HTC Corporation's answer and counterclaims to plaintiff's second amended complaint, Defendants, Dec. 21, 2009.
Document 0241—Defendant Research in Motion LTD and Research in Motion Corporation's second answer, defenses and counterclaims to plaintiff's second amended complaint, Defendants, Dec. 21, 2009.
Document 0242—Defendant Pantech Wireless, Inc's answer, affirmative defenses and counterclaims to Fractus SA's second amended complaint, Defendants, Dec. 21, 2009.
Document 0243—Defendant Sanyo Electric Co. LTD's answer to second amended complaint for patent infringement, Defendants, Dec. 22, 2009.
Document 0244—Defendant Sanyo North America Corporation's answer to second amended complaint for patent Infringement, Defendants, Dec. 22, 2009.
Document 0246—Defendant UTStarcom, Inc's answer, affirmative defenses and counterclaims to Fractus SA's second amended complaint, Defendants, Dec. 22, 2009.
Document 0247—Palm, Inc's answer, affirmative defenses and counterclaims to plaintiff's second amended complaint, Defendants, Dec. 22, 2009.
Document 0248—Kyocera Communications, Inc's answer, affirmative defenses and counterclaims to plaintiff's second amended complaint, Defendants, Dec. 22, 2009.
Document 0249—Kyocera Wireless Corp's answer, affirmative defenses and counterclaims to plaintiff's second amended complaint, Defendants, Dec. 22, 2009.
Document 0250—Defendants Samsung Electronics Co., Ltd.'s; Samsung Electronics answer and counterclaim to the second amended complaint of plaintiff Fractus, Defendants, Dec. 23, 2009.
Document 0251—Defendants LG Electronics Inc., LG Electronics USA, Inc., and LG Electronics Mobilecomm USA Inc. answer and counterclaim to second amended complaint, Defendants, Dec. 28, 2009.
Document 0252—Answer of the Sharp Defendants to plaintiff's second amended complaint, Defendants, Dec. 29, 2009.
Document 0255—Plaintiff Fractus, S. A.'s answer to defendant Personal Communications Devices Holdings, LLC's counterclaims to the Second Amended Complaint, Susman Godfrey, Jan. 4, 2010.
Document 0256—Plaintiff Fractus, S. A.'s answer to the counterclaims of defendants Research in Motion LTD. and Research in Motion Corporation to the Second Amended Complaint, Susman Godfrey, Jan. 4, 2010.
Document 0257—Plaintiff Fractus, S. A.'s answer to counterclaims of defendant Pantech Wireless, Inc. to the Second Amended Complaint, Susman Godfrey, Jan. 4, 2010.
Document 0258—Plaintiff Fractus, S. A.'s answer to defendant Kyocera Communications, Inc's Counterclaims to the Second Amended Complaint, Susman Godfrey, Jan. 4, 2010.
Document 0259—Plaintiff Fractus, S. A.'s answer to defendant Kyocera Wireless Corp's Counterclaims to the Second Amended Complaint, Susman Godfrey, Jan. 4, 2010.
Document 0260—Plaintiff Fractus, S. A.'s answer to defendant Palm, Inc's Counterclaims to the Second Amended Complaint, Susman Godfrey, Jan. 4, 2010.
Document 0261—Plaintiff Fractus, S. A.'s answer to defendant UTStarcom, Inc's Counterclaims to the Second Amended Complaint, Susman Godfrey, Jan. 4, 2010.
Document 0262—Plaintiff Fractus, S. A.'s answer to counterclaims of defendant Samsung Telecommunications America LLC to the Second Amended Complaint, Susman Godfrey, Jan. 4, 2010.

(56) **References Cited**

OTHER PUBLICATIONS

Document 0263—Plaintiff Fractus, S. A.'s answer to counterclaims of defendants LG Electronics Inc., Electronics USA, Inc., and LG Electronics Mobilecomm USA, Inc. to the Second Amended Complaint, Susman Godfrey, Jan. 4, 2010.
Document 0273—Plaintiff Fractus, S. A.'s answer to counterclaims of defendants HTC America, Inc to the Second Amended Complaint, Susman Godfrey, Jan. 14, 2010.
Document 0286—Amended answer of the Sharp defendants to plaintiff's second amended complaint, Defendants, Feb. 24, 2010.
Document 0287—Defendants Samsung Electronics Co., Ltd.'s; Samsung Electronics Research Institute's and Samsung Semiconductor Europe GmbH's first amended answer; and Samsung Telecommunications America LLC's first amended answer, Defendants, Feb. 24, 2010.
Infringement Chart—Samsung SCH-R500., Fractus, Nov. 5, 2009.
Infringement Chart—Samsung SCH-R500. U.S. Pat. No. 7,148,850, Fractus, Nov. 5, 2009.
Infringement Chart—Samsung SCH-R500. U.S. Pat. No. 7,202,822, Fractus, Nov. 5, 2009.
Infringement Chart—Samsung SCH-R600, Fractus, Nov. 5, 2009.
Infringement Chart—Samsung SCH-R600. U.S. Pat. No. 7,148,850, Fractus, Nov. 5, 2009.
Infringement Chart—Samsung SCH-R600. U.S. Pat. No. 7,202,822, Fractus, Nov. 5, 2009.
Infringement Chart—Samsung SCH-R800, Fractus, Nov. 5, 2009.
Infringement Chart—Samsung SCH-R800. U.S. Pat. No. 7,148,850, Fractus, Nov. 5, 2009.
Infringement Chart—Samsung SCH-R800. U.S. Pat. No. 7,202,822, Fractus, Nov. 5, 2009.
Infringement Chart—Samsung SCH-U310, Fractus, Nov. 5, 2009.
Infringement Chart—Samsung SCH-U310. U.S. Pat. No. 7,148,850, Fractus, Nov. 5, 2009.
Infringement Chart—Samsung SCH-U310. U.S. Pat. No. 7,202,822, Fractus, Nov. 5, 2009.
Infringement Chart—Samsung SCH-U430, Fractus, Nov. 5, 2009.
Infringement Chart—Samsung SCH-U430. U.S. Pat. No. 7,148,850, Fractus, Nov. 5, 2009.
Infringement Chart—Samsung SCH-U430. U.S. Pat. No. 7,202,822, Fractus, Nov. 5, 2009.
Infringement Chart—Samsung SCH-U470, Fractus, Nov. 5, 2009.
Infringement Chart—Samsung SCH-U470. U.S. Pat. No. 7,148,850, Fractus, Nov. 5, 2009.
Infringement Chart—Samsung SCH-U470. U.S. Pat. No. 7,202,822, Fractus, Nov. 5, 2009.
Infringement Chart—Samsung SCH-U520, Fractus, Nov. 5, 2009.
Infringement Chart—Samsung SCH-U520. U.S. Pat. No. 7,148,850, Fractus, Nov. 5, 2009.
Infringement Chart—Samsung SCH-U520. U.S. Pat. No. 7,202,822, Fractus, Nov. 5, 2009.
Infringement Chart—Samsung SCH-U740, Fractus, Nov. 5, 2009.
Infringement Chart—Samsung SCH-U740. U.S. Pat. No. 7,148,850, Fractus, Nov. 5, 2009.
Infringement Chart—Samsung SCH-U740. U.S. Pat. No. 7,202,822, Fractus, Nov. 5, 2009.
Infringement Chart—Samsung SCH-U750, Fractus, Nov. 5, 2009.
Infringement Chart—Samsung SCH-U750. U.S. Pat. No. 7,148,850, Fractus, Nov. 5, 2009.
Infringement Chart—Samsung SCH-U750. U.S. Pat. No. 7,202,822, Fractus, Nov. 5, 2009.
Infringement Chart—Samsung SCH-U940, Fractus, Nov. 5, 2009.
Infringement Chart—Samsung SCH-U940. U.S. Pat. No. 7,202,822, Fractus, Nov. 5, 2009.
Infringement Chart—Samsung SCH-U940. U.S. Pat. No. 7,148,850, Fractus, Nov. 5, 2009.
Infringement Chart—Samsung SCH A127, Fractus, Nov. 5, 2009.
Infringement Chart—Samsung SCH U340., Fractus, Nov. 5, 2009.
Infringement Chart—Samsung SCH U340. U.S. Pat. No. 7,148,850, Fractus, Nov. 5, 2009.
Infringement Chart—Samsung SCH U340. U.S. Pat. No. 7,202,822, Fractus, Nov. 5, 2009.
Infringement Chart—Samsung SCH U410., Fractus, Nov. 5, 2009.
Infringement Chart—Samsung SCH U410. U.S. Pat. No. 7,148,850, Fractus, Nov. 5, 2009.
Infringement Chart—Samsung SCH U410. U.S. Pat. No. 7,202,822, Fractus, Nov. 5, 2009.
Infringement Chart—Samsung SCH U700, Fractus, Nov. 5, 2009.
Infringement Chart—Samsung Sch U700. U.S. Pat. No. 7,148,850, Fractus, Nov. 5, 2009.
Infringement Chart—Samsung SCH U700. U.S. Pat. No. 7,202,822, Fractus, Nov. 5, 2009.
Infringement Chart—Samsung SGH-A237, Fractus, Nov. 5, 2009.
Infringement Chart—Samsung SGH-A237. U.S. Pat. No. 7,148,850, Fractus, Nov. 5, 2009.
Infringement Chart—Samsung SGH-A237. U.S. Pat. No. 7,202,822, Fractus, Nov. 5, 2009.
Infringement Chart—Samsung SGH-A257, Fractus, Nov. 5, 2009.
Infringement Chart—Samsung SGH-A257 Magnet. U.S. Pat. No. 7,148,850, Fractus, Nov. 5, 2009.
Infringement Chart—Samsung SGH-A257 Magnet. U.S. Pat. No. 7,202,822, Fractus, Nov. 5, 2009.
Infringement Chart—Samsung SGH-A837, Fractus, Nov. 5, 2009.
Infringement Chart—Samsung SGH-A837. U.S. Pat. No. 7,148,850, Fractus, Nov. 5, 2009.
Infringement Chart—Samsung SGH-A837. U.S. Pat. No. 7,202,822, Fractus, Nov. 5, 2009.
Infringement Chart—Samsung SGH-A887, Fractus, Nov. 5, 2009.
Infringement Chart—LG VX5400. U.S. Pat. No. 7,202,822, Fractus, Nov. 5, 2009.
Infringement Chart—LG VX5500, Fractus, Nov. 5, 2009.
Infringement Chart—LG VX5500. U.S. Pat. No. 7,148,850, Fractus, Nov. 5, 2009.
Infringement Chart—LG VX5500. U.S. Pat. No. 7,202,822, Fractus, Nov. 5, 2009.
Infringement Chart—LG VX8350, Fractus, Nov. 5, 2009.
Infringement Chart—LG VX8350. U.S. Pat. No. 7,148,850, Fractus, Nov. 5, 2009.
Infringement Chart—LG VX8350. U.S. Pat. No. 7,202,822, Fractus, Nov. 5, 2009.
Infringement Chart—LG VX8360., Fractus, Nov. 5, 2009.
Infringement Chart—LG VX8360. U.S. Pat. No. 7,148,850, Fractus, Nov. 5, 2009.
Infringement Chart—LG VX8360. U.S. Pat. No. 7,202,822, Fractus, Nov. 5, 2009.
Infringement Chart—LG VX8500, Fractus, Nov. 5, 2009.
Infringement Chart—LG VX8500. U.S. Pat. No. 7,148,850, Fractus, Nov. 5, 2009.
Infringement Chart—LG VX8500. U.S. Pat. No. 7,202,822, Fractus, Nov. 5, 2009.
Infringement Chart—LG VX8560 Chocolate 3, Fractus, Nov. 5, 2009.
Infringement Chart—LG VX8560 Chocolate 3. U.S. Pat. No. 7,148,850, Fractus, Nov. 5, 2009.
Infringement Chart—LG VX8560 Chocolate 3. U.S. Pat. No. 7,202,822, Fractus, Nov. 5, 2009.
Infringement Chart—LG VX8610, Fractus, Nov. 5, 2009.
Infringement Chart—LG VX8610. U.S. Pat. No. 7,148,850, Fractus, Nov. 5, 2009.
Infringement Chart—LG VX8610. U.S. Pat. No. 7,202,822, Fractus, Nov. 5, 2009.
Infringement Chart—LG VX8800, Fractus, Nov. 5, 2009.
Infringement Chart—LG VX8800. U.S. Pat. No. 7,148,850, Fractus, Nov. 5, 2009.
Infringement Chart—LG VX8800. U.S. Pat. No. 7,202,822, Fractus, Nov. 5, 2009.
Infringement Chart—LG VX9400, Fractus, Nov. 5, 2009.
Infringement Chart—LG Xenon GR500., Fractus, Nov. 5, 2009.
Infringement Chart—LG Xenon GR500. U.S. Pat. No. 7,148,850, Fractus, Nov. 5, 2009.
Infringement Chart—LG Xenon GR500. U.S. Pat. No. 7,202,822, Fractus, Nov. 5, 2009.
Infringement Chart—Palm Centro 685, Fractus, Nov. 5, 2009.

(56) **References Cited**

OTHER PUBLICATIONS

Infringement Chart—Palm Centro 685. U.S. Pat. No. 7,148,850, Fractus, Nov. 5, 2009.
Infringement Chart—Palm Centro 685. U.S. Pat. No. 7,202,822, Fractus, Nov. 5, 2009.
Infringement Chart—Palm Centro 690, Fractus, Nov. 5, 2009.
Infringement Chart—Palm Centro 690. U.S. Pat. No. 7,148,850, Fractus, Nov. 5, 2009.
Infringement Chart—Palm Centro 690. U.S. Pat. No. 7,202,822, Fractus, Nov. 5, 2009.
Infringement Chart—Palm Pre, Fractus, Nov. 5, 2009.
Infringement Chart—Palm Pre. U.S. Pat. No. 7,148,850, Fractus, Nov. 5, 2009.
Infringement Chart—Palm Pre. U.S. Pat. No. 7,202,822, Fractus, Nov. 5, 2009.
Infringement Chart—Pantech Breeze C520., Fractus, Nov. 5, 2009.
Infringement Chart—Pantech Breeze C520. U.S. Pat. No. 7,148,850, Fractus, Nov. 5, 2009.
Infringement Chart—Pantech Breeze C520. U.S. Pat. No. 7,202,822, Fractus, Nov. 5, 2009.
Infringement Chart—Pantech C610, Fractus, Nov. 5, 2009.
Infringement Chart—Pantech C610. U.S. Pat. No. 7,148,850, Fractus, Nov. 5, 2009.
Infringement Chart—Pantech C610. U.S. Pat. No. 7,202,822, Fractus, Nov. 5, 2009.
Infringement Chart—Pantech C740, Fractus, Nov. 5, 2009.
Infringement Chart—Pantech C740. U.S. Pat. No. 7,148,850, Fractus, Nov. 5, 2009.
Infringement Chart—Pantech C740. U.S. Pat. No. 7,202,822, Fractus, Nov. 5, 2009.
Infringement Chart—Pantech DUO C810., Fractus, Nov. 5, 2009.
Infringement Chart—Pantech DUO C810. U.S. Pat. No. 7,148,850, Fractus, Nov. 5, 2009.
Infringement Chart—Pantech DUO C810. U.S. Pat. No. 7,202,822, Fractus, Nov. 5, 2009.
Infringement Chart—Pantech Slate C530, Fractus, Nov. 5, 2009.
Infringement Chart—Phone: LG Dare VX9700, Fractus, Nov. 5, 2009.
Infringement Chart—RIM Blackberry 8110, Fractus, Nov. 5, 2009.
Infringement Chart—LG Dare VX9700 . U.S. Pat. No. 7,528,782, Fractus, Nov. 5, 2009.
Infringement Chart—LG Dare VX9700. U.S. Pat. No. 7,148,850, Fractus, Nov. 5, 2009.
Infringement Chart—LG Dare VX9700. U.S. Pat. No. 7,202,822, Fractus, Nov. 5, 2009.
Infringement Chart—LG enV Touch VX1100., Fractus, Nov. 5, 2009.
Infringement Chart—LGenV Touch VX1100. U.S. Pat. No. 7,148,850, Fractus, Nov. 5, 2009.
Infringement Chart—LGenV Touch VX1100. U.S. Pat. No. 7,202,822, Fractus, Nov. 5, 2009.
Infringement Chart—LG enV VX-9900, Fractus, Nov. 5, 2009.
Infringement Chart—LG enV VX-9900. U.S. Pat. No. 7,148,850, Fractus, Nov. 5, 2009.
Infringement Chart—LG enV VX-9900. U.S. Pat. No. 7,202,822, Fractus, Nov. 5, 2009.
Infringement Chart—LG EnV2 VX9100, Fractus, Nov. 5, 2009.
Infringement Chart—LG EnV2 VX9100. U.S. Pat. No. 7,148,850, Fractus, Nov. 5, 2009.
Infringement Chart—LG EnV2 VX9100. U.S. Pat. No. 7,202,822, Fractus, Nov. 5, 2009.
Infringement Chart—LG EnV3 VX9200., Fractus, Nov. 5, 2009.
Infringement Chart—LG EnV3 VX9200. U.S. Pat. No. 7,148,850, Fractus, Nov. 5, 2009.
Infringement Chart—LG EnV3 VX9200. U.S. Pat. No. 7,202,822, Fractus, Nov. 5, 2009.
Infringement Chart—LG Flare LX165, Fractus, Nov. 5, 2009.
Infringement Chart—LG Flare LX165. U.S. Pat. No. 7,148,850, Fractus, Nov. 5, 2009.
Infringement Chart—LG Flare LX165. U.S. Pat. No. 7,202,822, Fractus, Nov. 5, 2009.
Infringement Chart—LG GT365 NEON., Fractus, Nov. 5, 2009.
Infringement Chart—LG GT365 NEON. U.S. Pat. No. 7,148,850, Fractus, Nov. 5, 2009.
Infringement Chart—LG GT365 NEON. U.S. Pat. No. 7,202,822, Fractus, Nov. 5, 2009.
Infringement Chart—LG Lotus, Fractus, Nov. 5, 2009.
Infringement Chart—LG Lotus. U.S. Pat. No. 7,148,850, Fractus, Nov. 5, 2009.
Infringement Chart—LG Lotus. U.S. Pat. No. 7,202,822, Fractus, Nov. 5, 2009.
Infringement Chart—LG MUZIQ LX570, Fractus, Nov. 5, 2009.
Infringement Chart—LG Muziq LX570. U.S. Pat. No. 7,148,850, Fractus, Nov. 5, 2009.
Infringement Chart—LG Muziq LX570. U.S. Pat. No. 7,202,822, Fractus, Nov. 5, 2009.
Infringement Chart—LG Rumor, Fractus, Nov. 5, 2009.
Infringement Chart—LG Rumor 2., Fractus, Nov. 5, 2009.
Infringement Chart—LG Rumor 2. U.S. Pat. No. 7,148,850, Fractus, Nov. 5, 2009.
Infringement Chart—LG Rumor 2. U.S. Pat. No. 7,202,822, Fractus, Nov. 5, 2009.
Infringement Chart—LG Rumor. U.S. Pat. No. 7,148,850, Fractus, Nov. 5, 2009.
Infringement Chart—LG Rumor. U.S. Pat. No. 7,202,822, Fractus, Nov. 5, 2009.
Infringement Chart—LG Shine CU720, Fractus, Nov. 5, 2009.
Infringement Chart—LG Shine CU720. U.S. Pat. No. 7,148,850, Fractus, Nov. 5, 2009.
Infringement Chart—LG Shine CU720. U.S. Pat. No. 7,202,822, Fractus, Nov. 5, 2009.
Infringement Chart—LG UX280, Fractus, Nov. 5, 2009.
Infringement Chart—LG UX280. U.S. Pat. No. 7,148,850, Fractus, Nov. 5, 2009.
Infringement Chart—LG UX280. U.S. Pat. No. 7,202,822, Fractus, Nov. 5, 2009.
Infringement Chart—LG Versa VX9600, Fractus, Nov. 5, 2009.
Infringement Chart—LG Versa VX9600. U.S. Pat. No. 7,148,850, Fractus, Nov. 5, 2009.
Infringement Chart—LG Versa VX9600. U.S. Pat. No. 7,202,822, Fractus, Nov. 5, 2009.
Infringement Chart—LG Voyager VX10000, Fractus, Nov. 5, 2009.
Infringement Chart—LG Voyager VX10000. U.S. Pat. No. 7,148,850, Fractus, Nov. 5, 2009.
Infringement Chart—LG Voyager VX10000. U.S. Pat. No. 7,202,822, Fractus, Nov. 5, 2009.
Infringement Chart—LG VU CU920, Fractus, Nov. 5, 2009.
Infringement Chart—LG Vu CU920. U.S. Pat. No. 7,148,850, Fractus, Nov. 5, 2009.
Infringement Chart—LG Vu CU920. U.S. Pat. No. 7,202,822, Fractus, Nov. 5, 2009.
Infringement Chart—LG VX5400, Fractus, Nov. 5, 2009.
Infringement Chart—LG VX5400. U.S. Pat. No. 7,148,850, Fractus, Nov. 5, 2009.
Aazhanng , B., Wireless communication: a power efficiency perspective—, Spread Spectrum Techniques and Applications, 7th , 2002. IEEE Seventh International Symposium on, Sep. 2, 2002.
Acquaviva , A., Power-aware network swapping for wireless palmtop PCs, Mobile Computing, IEEE Transactions on, May 1, 2006, vol. 5, No. 5.
Adcock , M. D, New type feed for high speed conical scanning, USAF Antenna Research and Development Program, 2th , 1952. Symposium on the, Aug. 11, 1952.
Addison , P. S., Fractals and chaos, Institute of Physics Publishing, Jan. 1, 1997, p. 256.
Addison , P. S., Fractals and chaos—An illustrated course, Institute of Physics Publishing, Jan. 1, 1997, pp. 1-3 , 30-36.
Addison , P. S., Fractals and Chaos—An illustrated course—Full, Institute of Physics Publising Bristol and Philadelphia, Jan. 1, 1997.
Addison , P. S., Fractals and chaos. An illustrated course, Institute of Physics Publishing, Jan. 1, 1997, p. 14-15.

(56) **References Cited**

OTHER PUBLICATIONS

Agrawal , P. et al, An experimental indoor wireless network—SWAN—a mobile multimedia wireless network, Personal Communications, IEEE, Apr. 1, 1996.
Ali , M. ; Hayes , G. J. et al, A triple band internal antenna for mobile handheld terminals, Antennas and Propagation Society (APS), 2002. IEEE International Symposium, Jun. 16, 2002.
Ancona , C., On small antenna impedance in weakly dissipative media, Antennas and Propagation, IEEE Transactions on, Mar. 1, 1978.
Andersen , J. B., The handbook of antenna design—Low- and medium-gain microwave antennas, Rudge , A. W. et al—IEE Eletromagnetic Waves Series; Peter Peregrinus Ltd. (2nd ed.), Jan. 1, 1986, vol. 1 and 2, p. 526-543.
Anguera , J. ; Puente , C. ; Borja , C., A procedure to design stacked microstrip patch antennas on a simple network model, Microwave and Optical Technology Letters, Aug. 1, 2001.
Anguera , J. ; Puente , C. ; Borja , C., A procedure to design wide-band electromagnetically-coupled stacked microstrip antennas based on a simple network model, Antennas and Propagation Society (APS), 1999. IEEE International Symposium, Jul. 11, 1999.
Anguera , J. ; Puente , C. ; Borja , C. ; Romeu , J., Miniature wideband stacked microstrip patch antenna based on the sierpinski fractal geometry, Antennas and Propagation Society (APS), 2000. IEEE International Symposium, Jul. 1, 2000, vol. 3, p. 1700-1703.
Anguera , J. ; Puente , C. ; Borja , C. ; Romeu , J. ; Aznar , M., Antenas microstrip apiladas con geometria de anillo—Stacked microstrip patch antennas, Unión Científica Internacional de la Radio (URSI), 15th , Zaragoza, 2000. Simposium Nacional de la, Sep. 1, 2000.
Anguera , J. ; Sanz , I. ; Mumbru , J. ; Puente , C., Multiband handset antenna behaviour by combining PIFA and slot radiators, Antennas and Propagation Society (APS), 2007. IEEE International Symposium, Jul. 1, 2007.
Ardizzoni , J., Know your trade-offs in portable designs, Mobile Handset Design Line, Jun. 13, 2005.
Arutaki , A. ; Chiba , J., Communication in a three-layered conducting media with a vertical magnetic dipole, Antennas and Propagation, IEEE Transactions on, Jul. 1, 1980, vol. 28, No. 4.
Auckland , D. T. et al., Reconfigurable antennas and RF front ends for portable wireless devices, Software Defined Radio Technical , 2002. Conference, Jan. 1, 2001, p. 29-33.
Bach Andersen , J. et al., On closely coupled dipoles in a random field, Antennas and Wireless Propagation Letters, IEEE, Dec. 1, 2006, vol. 5.
Balanis , C. A., Antenna theory—Analysis and Design—Chapter 9 / Chapter 14—Broadband dipoles and matching techniques / Microstrip antennas, Hamilton Printing, Jan. 1, 1982, p. 465-484 and 722-767.
Balanis , C. A., Antenna Theory—Analysis and design---Chapter 10—Travelling wave and broadband antennas, Hamilton Printing, Jan. 1, 1982, p. 498-502.
Balanis , C. A., Antenna theory—Analysis and design---Chapter 2—Fundamental parameters of antennas, John Wiley & Sons, Jan. 1, 1982, p. 28-100.
Barnsley , M., Fractals Everywhere, Academic Press Professional, Jan. 1, 1993, vol. 2nd Ed.
Barrick , W., A helical resonator antenna diplexer, USAF Antenna Research and Development Program, 10th , 1960. Symposium on the, Oct. 3, 1960.
Batson , D. D. et al, VHF unfurlable turnstile antennas, USAF Antenna Research and Development Program, 19th , 1969. Symposium on the, Oct. 14, 1969.
Behmann , F., Impact of wireless (Wi.Fi, WiMAX) on 3G and Next Generation—An initial assessment, Electro Information Technology, 2005. IEEE International Conference on, May 22, 2005.
Bellofiore , S., Smart-antenna systems for mobile communication networks. Part 1: Overview and antenna design, Antennas and Propagation Magazine, IEEE, Jun. 1, 2002, vol. 44, No. 3.
Bellofiore , S., Smart antenna system analysis, integration and performance for mobile ad-hoc networks (MANETs), Antennas and Propagation, IEEE Transactions on, May 1, 2002, vol. 50, No. 5.
Bennani , N., Integrating a digital camera in the home environment: architecture and prototype, Multimedia Software Engineering, 2000. IEEE Proceedings of International Symposium, Jan. 1, 2000.
Berizzi , F., Fractal analysis of the signal scattered from the sea surface, Antennas and Propagation, IEEE Transactions on, Feb. 1, 1999, vol. 47, No. 2.
Besthorn, 1.0 to 21.0 GHz Log-periodic dipole antenna, USAF Antenna Research and Development Program, 18th , 1968. Symposium on the, Oct. 15, 1968.
Blackband , W. T., The handbook of antenna design—Chapter 18---Coaxial transmisison lines and components, Rudge , A. W. et al.Peter Peregrinus, Jan. 1, 1986, vol. 1 and 2, No., p. 1612-1623.
Blackband , W. T., The handbook of antenna design—Chapter 18---Coaxial transmission lines and components, Rudge , A. W. et al—IEE Eletromagnetic Waves Series; Peter Peregrinus Ltd., Jan. 1, 1986, vol. 2nd ed., p. 1612-1616.
Bokhari , S. A. ; Zurcher , J. F. ; Mosig , J. R. et al, A small microstrip patch antenna with a convenient tuning option, Antennas and Propagation, IEEE Transactions on, Nov. 1, 1996.
Borja , C., Fractal microstrip antennas : Antenas fractales microstrip, Universitat Politecnica de Catalunya (UPC), Jul. 1, 1997.
Borja , C., High directivity fractal boundary microstrip patch antenna, Electronics Letters, Apr. 27, 2000, vol. 36, No. 9.
Borja , C., MSPK product, Fractus—Telefonica, Jan. 1, 1998.
Borja , C., Panel 01, Fractus—Telefonica, Jan. 1, 1998.
Borja , C. ; Puente , C., Iterative network models to predict the performance of Sierpinski fractal antennas and networks, Antennas and Propagation Society (APS), 1999. IEEE International Symposium, Jul. 11, 1999.
Borowski , E. J., Dictionary of Mathematics, Collins---Case 6:09-cv-00203-LED-JDL, Jan. 1, 1989, p. 456-457.
Boshoff , H., A fast box counting algorithm for determining the fractal dimension of sampled continuous functions, IEEE, Jan. 1, 1992.
Braun , C. ; Engblom , G. ; Beckman , C., Antenna diversity for mobile telephones, Antennas and Propagation Society (APS), 1998. IEEE International Symposium, Jun. 1, 1998.
Breden , R. et al., Multiband printed antenna for vehicles, University of Kent, Jan. 3, 2000.
Breden , R. et al., Printed fractal antennas, Antennas and Propagation, 1999. IEE National Conference on, Apr. 1, 1999.
Brown, A., A high-performance integrated K-band diplexer, Microwave Theory and Techniques, IEEE Transactions on, Aug. 8, 1999, vol. 47.
Buchholz , M. et al, Analysis, realisation and measurement of broadband miniature antennas for digital TV receivers in handheld terminals, Broadband Multimedia Systems and Broadcasting Preliminary Program (BMSB), 2006. IEEE International Symposium on, Apr. 6, 2006.
Buczkowski , S. ; Hildgen , P. ; Cartilier , L., Measurements of fractal dimension by box-counting: a critical analysis of data scatter, Physica A, Apr. 1, 1998, vol. 252.
Buczkowski , S. ; Kyriacos , S. ; Nekka , F. ; Cartilier , L., The modified box-countig method: analysis of some characteristic parameters, Pattern Recognition, Apr. 20, 1998, vol. 31, p. 411-418(8).
Burnett , G. F., Antenna installations on super constellation airbone early warning and control aircraft, USAF Antenna Research and Development Program, 4th , 1954. Symposium on the, Oct. 17, 1954.
Parker , E. A. ; El Sheikh , A. N. A., Convoluted array elements and reduced size unit cells for frequency selective surfaces, Microwaves, Antennas and Propagation, IEE Proceedings H, Feb. 1, 1991, p. 19-22.
Parker , S., McGraw-Hill Dictionary of Scientific and Technical Terms (5th ed. 1994), McGraw-Hill---Case 6:09-cv-00203-LED-JDL, Jan. 1, 1994, p. 1542.
Parker, E. A. ; El Sheikh , A. N. A., Convoluted dipole array elements, Electronics Letters, Feb. 14, 1991.
Paschen , D. A., Broadband microstrip matching techniques, Antenna Applications, 1983. Symposium, Sep. 21, 1983.

(56) **References Cited**

OTHER PUBLICATIONS

Paschen , D. A., Structural stopband elimination with the monopole-slot antenna, Antenna Applications, 1982. Symposium, Sep. 22, 1982.
Paschen , D. A. ; Olson , S., A crossed-slot antenna with an infinite balun feed, Antenna Applications, 1995. Symposium, Sep. 20, 1995.
Peitgen , H., Chaos and fractals : New frontiers of science, Springer, Jan. 1, 1992, pp. 231-233 and 386-391.
Peitgen , H. ; Saupe , D., The science of fractal images, Springer, Jan. 1, 1988, p. 60-63.
Peitgen , H. O. ; Jürgens , H. ; Saupe , D., Chaos and fractals. New frontiers of science, Springer, Feb. 12, 1993, pp. 212-216 ; 387-388.
Peitgen , H. O. ; Saupe , H., The science of fractal images, Springer, Jan. 1, 1988, p. 1-3, 24-27, 58-61.
Peitgen , H. O. et al, Chaos and fractals, Springer, Jan. 1, 1992, p. 23-28, 94-95, 202-206, 225, 231-243, 283-292, 392-396, 441, 225, 372-373, 386-389, 390-391.
Peitgen , H. O. et al, Chaos and fractals, Springer, Jan. 1, 1992, p. 880-895.
Peitgen , H. O. et al, Chaos and fractals : new frontiers of science, Springer, Jan. 1, 1992, p. 22-26, 62-66, 94-105, 212-219, 229-243.
Penn , A., Fractal dimension of low-resolution medical images, Engineering in Medicine and Biology Society (EMBS), 18th , 1996. IEEE Annual International Conference of the, Jan. 1, 1996.
Perez-Costa , X. et al, Analysis of the integration of IEEE 802.11e capabilities in battery limited mobile devices, Wireless Communications, IEEE, Dec. 1, 2005.
Phelan , R., A wide-band parallel-connected balun, Microwave Theory and Techniques, IEEE Transactions on, May 1, 1970.
Poilasne , G., Active metallic photonic band-gap materials (MPBG): experimental resultors on beam shaper, Antennas and Propagation, IEEE Transactions on, Jan. 1, 2000, vol. 48, No. 1.
Pozar , D. M., Comparison of three methods for the measurement of printed antenna efficiency, Antennas and Propagation, IEEE Transactions on, Jan. 1, 1988.
Pozar , D. M., Microstrip antennas, Proceedings of the IEEE, Jan. 1, 1992.
Pozar , D. M., Microwave Engineering---Chapter 12: Introduction to Microwave Systems, Addison-Wesley, Jan. 1, 1990, p. 663-666 , 675-676.
Pozar , D. M. ; Newman , E. H., Analysis of a Monopole Mounted near or at the Edge of a Half-Plane, Antennas and Propagation, IEEE Transactions on, May 1, 1981, vol. AP-29, No. 3.
Pozar , D. M. ; Schaubert , D. H., Microstrip antennas. The analysis and design of microstrip antennas and arrays, IEEE Press; Pozar, Schaubert, Jan. 1, 1995, p. 431.
Pressley, A, Elementary Differential Geometry, Springer, Jan. 1, 2000, p. 252-257.
Pribetich , P. ; Combet , Y. et al, Quasifractal planar microstrip resonators for microwave circuits, Microwave and Optical Technology Letters, Jun. 20, 1999, vol. 21, No. 6, p. 433-436.
Prokhorov , A. M., Bolshaya Sovetskaya Entsiklopediya, Sovetskaya Entsiklopediya, Jan. 1, 1976, vol. 24, Book 1, p. 67.
Puente , C, Fractal antennas, Universitat Politecnica de Catalunya (UPC), May 1, 1997, pp. ix-xiv, 234-237.
Puente , C., Fractal antennas, Universitat Politecnica de Catalunya (UPC), May 1, 1997.
Puente , C. ; Claret , J. ; Sagues , F. et al, Multiband properties of a fractal tree antenna generated by electrochemical deposition, Electronics Letters, Dec. 5, 1996, vol. 32, No. 25, p. 2298-2299.
Puente , C. ; Pous , R., Diseño fractal de agrupaciones de antenas—Fractal design of antenna arrays, Unión Científica Internacional de la Radio (URSI), 9th , La Palma, 1994. Simposium Nacional de la, Sep. 1, 1994.
Puente , C. ; Pous , R., Fractal design of multiband and low side-lobe arrays, Antennas and Propagation, IEEE Transactions on, May 1, 1996, vol. 44, No. 5.
Puente , C. ; Romeu , J. ; Bartolome , R. ; Pous , R., Perturbation of the Sierpinski antenna to allocate operating bands, Electronics Letters, Nov. 21, 1996, vol. 32, No. 24.
Puente , C. ; Romeu , J. ; Cardama , A., Fractal-shaped antennas, Frontiers in electromagnetics—IEEE Press, Jan. 1, 2000, Chapter 2, p. 48-50.
Puente , C. ; Romeu , J. ; Cardama , A., La antena de Koch—un monopolo largo pero pequeño, Unión Científica Internacional de la Radio (URSI), 12th , Bilbao, 1997. Simposium Nacional de la, Sep. 1, 1998.
Puente , C. ; Romeu , J. ; Cardama , A. ; Pous , R., Multiband fractal antennas and arrays, Fractals engineering—from theory to industrial applications, Jan. 1, 1997.
Puente , C. ; Romeu , J. ; Cardama , A. ; Pous , R., On the behavior of the Sierpinski multiband fractal antenna, Antennas and Propagation, IEEE Transactions on, Apr. 1, 1998, vol. 46, No. 4.
Puente , C. ; Romeu , J. ; Cardama, A., The Koch monopole—a small fractal antenna, Antennas and Propagation, IEEE Transactions on, Nov. 1, 2000, vol. 48, No. 11.
Puente , C. et al, Small but long Koch fractal monopole, Electronics Letters, Jan. 8, 1998, vol. 34, No. 1, p. 9-10.
Qiu , J. et al., A planar monopole antenna design with band-notched characteristic, Antennas and Propagation, IEEE Transactions on, Jan. 1, 2006, vol. 54, No. 1, p. 288-292.
Rademacher , H. ; Toeplitz , O., The Enjoyment of Math, Princeton Science Library, Jan. 1, 1957, p. 164-169.
Rensh , Y. A., Broadband microstrip antenna, Antenna Theory and Techniques, 1998. International Conference on, Sep. 22, 1998, vol. 28, p. 420-423.
Rich , B., Review of Elementary Mathematics 2d ed. 1997, McGraw-Hill---Case 6:09-cv-00203-LED-JDL, Jan. 1, 1997, p. 245-247.
Romeu , J. ; Blanch , S., A three dimensional hilbert antenna, Antennas and Propagation Society (APS), 2002. IEEE International Symposium, Jun. 16, 2002.
Romeu , J. ; Puente , C. ; Cardama , J., Small fractal antennas, Fractals in Engineering, 1999. India Conference, Jun. 1, 1999, p. 35-36.
Rosa , J. ; Case E. W., A wide angle circularly polarized omnidirectional array antenna, USAF Antenna Research and Development Program, 18th , 1968. Symposium on the, Oct. 15, 1968.
Rotman , W., Problems encountered in the design of flush-mounted antennas for high speed aircraft, USAF Antenna Research and Development Program, 2th , 1952. Symposium on the, Oct. 19, 1952, vol. 46.
Rouvier , R. et al., Fractal analysis of bidimensional profiles and application to electromagnetic scattering from soils, IEEE, Jan. 1, 1996.
Rowell , C. R. ; Murch , R. D., A compact PIFA suitable for dual-frequency 900-1800-MHz operation, Antennas and Propagation, IEEE Transactions on, Apr. 1, 1998.
Rowell , C. R. ; Murch , R.D., A capacitively loaded PIFA for compact mobile telephone handsets, Antennas and Propagation, IEEE Transactions on, May 1, 1997.
Rumsey , V., Frequency independent antennas, Academic Press, Jan. 1, 1996, p. 2-3.
Rumsey , V., Frequency independent antennas—Full, Academic Press, Jan. 1, 1966.
Verdura, O., Miniature fractal antenna : Antena fractal miniatura, Universitat Politecnica de Catalunya (UPC), Sep. 1, 1997.
Virga , K. L., Low-profile enhanced-bandwidth PIFA antennas for wireless communications packaging, Microwave Theory and Techniques, IEEE Transactions on, Oct. 10, 1997, vol. 45.
Volgov , V. A., Parts and units of radio electronic equipment, Energiya, Jan. 1, 1967.
Walker , G. J. et al, Fractal vol. antennas, Electronics Letters, Aug. 6, 1998.
Wall , H. ; Davies , H. W., Communications antennas for mercury space capsule, USAF Antenna Research and Development Program, 11th , 1961. Symposium on the, Oct. 16, 1961.
Walsh , J.J. ; Watterson , J., Fractal analysis of fracture patterns using the standard box-counting technique: valid and Invalid methodologies, Journal of Structure Geology, Mar. 10, 1993, vol. 15.
Wang , C. J. et al, Compact microstrip meander antenna, Microwave and Optical Technology Letters, Sep. 20, 1990.

(56) **References Cited**

OTHER PUBLICATIONS

Wang , H. Y. ; Lancaster , M. J., Aperture-coupled thin-film superconducting meander antennas, Antennas and Propagation, IEEE Transactions on, May 1, 1999.
Watanabe , T. ; Furutani , K. ; Nakajima , N. et al, Antenna switch duplexer for dualband phone (GSM / DCS) using LTCC multilayer technology, Microwave Symposium Digest (MTT-S), 1999. IEEE International, Jun. 19, 1999.
Waterhouse , R. B., Small microstrip patch antenna, Electronics Letters, Apr. 13, 1995, p. 604-605.
Waterhouse , R. B., Small printed antenna easily integrated into a mobile handset terminal, Electronics Letters, Aug. 20, 1998.
Waterhouse , R. B., Small printed antennas with low cross-polarised fields, Electronics Letters, Jul. 17, 1997.
Waterhouse , R. B. ; Kokotoff , D. M. ; Zavosh , F., Investigation of small printed antennas suitable for mobile communication handsets, Antennas and Propagation Society (APS), 1998. IEEE International Symposium, Jun. 21, 1998.
Waterhouse , R. B. ; Targonski , S. D. ; Kokotoff , D. M., Design and performance of small printed antennas, Antennas and Propagation, IEEE Transactions on, Nov. 1, 1998.
Watson , T. ; Friesser , J., A phase shift direction finding technique, USAF Antenna Research and Development Program, 7th , 1957. Symposium on the, Oct. 21, 1957.
Weeks , W. L., Antenna engineering, McGraw-Hill Book Company, Jan. 1, 1968, p. 167-180.
Weeks , W. L., Eletromagnetic theory for engineering applications, John Wiley & Sons, Jan. 1, 1964, p. 46-50.
Wegner , D. E., B-70 antenna system, USAF Antenna Research and Development Program, 13th , 1963. Symposium on the, Oct. 14, 1963.
Wei , G. ; Tang , J., Study of minimum box-counting method for image fractal dimension estimation, Electricity Distribution (CICED), 2008. China International Conference on, Dec. 10, 2008.
Weinstein , S. et al., Multi-user wireless access to a digital cable system, Wireless Communications and Networking (WCNC), 2004. IEEE Conference on, Mar. 21, 2004, vol. 1.
Werner , D. H and Mittra , R., Frontiers in electromagnetics, IEEE Press, Jan. 1, 2000, p. 5-7.
Werner , D. H., Frequency independent features of self-similar fractal antennas, Radio Science, Nov. 1, 1996.
Werner , D. H., Radiation characteristics of thin-wire ternary fractal trees, Electronics Letters, Apr. 15, 1999.
West , B.H. et al., The Prentice-Hall Encyclopedia of Mathematics (1982), Prentice-Hall, Jan. 1, 1982, p. 404-405.
Wheeler , H. A., Fundamental limitations of small antennas, Proceedings of the IRE, Jan. 1, 1947.
Wheeler , H. A., Antenna engineering handbook—Chapter 6—Small antennas, Johnson , R. C.—McGraw-Hill, Jan. 1, 1993.
Wheeler , H. A., Small antennas, USAF Antenna Research and Development Program, 23th , 1973. Symposium on the, Oct. 10, 1973.
Wheeler , H. A., Small antennas, Antennas and Propagation, IEEE Transactions on, Jul. 1, 1975, vol. 23.
Wheeler , H. A., The radiansphere around a small antenna, Proceedings of the IRE, Aug. 1, 1959.
Wikka , K., Letter to FCC that will authorize the appointment of Morton Flom Eng and/or FlomAssociates Inc to act as their Agent in all FCC matters, Nokia Mobile Phones, Aug. 5, 1999.
Williams , T. et al, Dual band meander antenna for wireless telephones, Microwave and Optical Technology Letters, Jan. 20, 2000.
Wong , K. L., Modified planar inverted F antenna, Electronics Letters, Jan. 8, 1998.
Wong , K. L., Surface-mountable EMC monopole chip antenna for WLAN operation, Antennas and Propagation, IEEE Transactions on, Apr. 1, 2006, vol. 54, No. 4.
Wong , K. L. ; Kuo , J. S. ; Fang , S. T. et al, Broadband microstrip antennas with integrated reactive loading, Microwave Conference (APMC), 1999. Asia Pacific, Dec. 3, 1999.
Wong , K. L. ; Sze , J. Y., Dual-frequency slotted rectangular microstrip antenna, Electronics Letters, Jul. 9, 1998.
Wong , S., An improved microstrip Sierpinski carpet antenna, Microwave Conference (APMC), 2001. Asia-Pacific, Jan. 1, 2001.
Wu , C. S. et al., Personal mobile multimedia communications in a wireless WAN environment, Multimedia Signal Processing, 1st , 1997. IEEE Workshop on, Jun. 23, 1997.
Yew-Siow , R., Dipole configurations with strongly improved radiation efficiency for hand-held transceivers, Antennas and Propagation, IEEE Transactions on, Jul. 1, 1998, vol. 46, No. 6.
Yoon , H., Internal antenna for multiband mobile handset applications, Antennas and Propagation Society (APS), 2005. IEEE International Symposium, Jul. 3, 2005.
Zhang , D. ; Liang , G. C. ; Shih , C. F., Narrowband lumped element microstrip filters using capacitively loaded inductors, Microwave Symposium Digest (MTT-S), 1995. IEEE International, May 16, 1995, p. 379-382.
Zhang , H., Adaptive content delivery on mobile internet across multiple form factors, Multimedia Conference, 10th. 2004. Conference, Jan. 1, 2004.
Infringement Chart—Blackberry 8100. U.S. Pat. No. 7,148,850, Fractus, Nov. 5, 2009.
Infringement Chart—Blackberry 8100. U.S. Pat. No. 7,202,822, Fractus, Nov. 5, 2009.
Infringement Chart—Blackberry 8110. U.S. Pat. No. 7,148,850, Fractus, Nov. 5, 2009.
Infringement Chart—Blackberry 8110. U.S. Pat. No. 7,202,822, Fractus, Nov. 5, 2009.
Infringement Chart—Blackberry 8120. U.S. Pat. No. 7,148,850, Fractus, Nov. 5, 2009.
Infringement Chart—Blackberry 8120. U.S. Pat. No. 7,202,822, Fractus, Nov. 5, 2009.
Infringement Chart—Blackberry 8130. U.S. Pat. No. 7,148,850, Fractus, Nov. 5, 2009.
Infringement Chart—Blackberry 8130. U.S. Pat. No. 7,202,822, Fractus, Nov. 5, 2009.
Infringement Chart—Blackberry 8220. U.S. Pat. No. 7,148,850, Fractus, Nov. 5, 2009.
Infringement Chart—RIM Blackberry 8120, Fractus, Nov. 5, 2009.
Infringement Chart—RIM Blackberry 8130, Fractus, Nov. 5, 2009.
Infringement Chart—RIM Blackberry 8220, Fractus, Nov. 5, 2009.
Infringement Chart—RIM Blackberry 8310, Fractus, Nov. 5, 2009.
Infringement Chart—RIM Blackberry 8320, Fractus, Nov. 5, 2009.
Infringement Chart—RIM Blackberry 8330, Fractus, Nov. 5, 2009.
Infringement Chart—RIM Blackberry 8820, Fractus, Nov. 5, 2009.
Infringement Chart—RIM Blackberry 8830, Fractus, Nov. 5, 2009.
Infringement Chart—RIM Blackberry 8900, Fractus, Nov. 5, 2009.
Infringement Chart—RIM Blackberry 9630, Fractus, Nov. 5, 2009.
Infringement Chart—RIM Blackberry Bold 9000., Fractus, Nov. 5, 2009.
Infringement Chart—RIM Blackberry Pearl 8100, Fractus, Nov. 5, 2009.
Infringement Chart—RIM Blackberry Storm 9530., Fractus, Nov. 5, 2009.
Infringement Chart—Samsung Blackjack II SCH-1617. U.S. Pat. No. 7,148,850, Fractus, Nov. 5, 2009.
Infringement Chart—Samsung Blackjack II SCH-1617. U.S. Pat. No. 7,202,822, Fractus, Nov. 5, 2009.
Infringement Chart—Samsung Blackjack II SGH-i617., Fractus, Nov. 5, 2009.
Infringement Chart—Samsung Blast SGH-T729. U.S. Pat. No. 7,148,850, Fractus, Nov. 5, 2009.
Infringement Chart—Samsung Blast SGH-T729. U.S. Pat. No. 7,202,822, Fractus, Nov. 5, 2009.
Infringement Chart—Samsung Blast SGH T729, Fractus, Nov. 5, 2009.
Infringement Chart—Samsung EPIX SGH-1907, Fractus, Nov. 5, 2009.
Infringement Chart—Samsung FlipShot SCH-U900, Fractus, Nov. 5, 2009.
Infringement Chart—Samsung FlipShot SCH-U900. U.S. Pat. No. 7,148,850, Fractus, Nov. 5, 2009.

(56) **References Cited**

OTHER PUBLICATIONS

Infringement Chart—Samsung FlipShot SCH-U900. U.S. Pat. No. 7,202,822, Fractus, Nov. 5, 2009.
Infringement Chart—Samsung Instinct M800, Fractus, Nov. 5, 2009.
Infringement Chart—Samsung Instinct M800. U.S. Pat. No. 7,148,850, Fractus, Nov. 5, 2009.
Infringement Chart—Samsung Instinct M800. U.S. Pat. No. 7,202,822, Fractus, Nov. 5, 2009.
Infringement Chart—Samsung M320, Fractus, Nov. 5, 2009.
Infringement Chart—Samsung M320. U.S. Pat. No. 7,148,850, Fractus, Nov. 5, 2009.
Infringement Chart—Samsung M320. U.S. Pat. No. 7,202,822, Fractus, Nov. 5, 2009.
Infringement Chart—Samsung Messager, Fractus, Nov. 5, 2009.
Infringement Chart—Samsung Messager. U.S. Pat. No. 7,148,850, Fractus, Nov. 5, 2009.
Infringement Chart—Samsung Messager. U.S. Pat. No. 7,202,822, Fractus, Nov. 5, 2009.
Infringement Chart—Samsung Omnia SGH-I900, Fractus, Nov. 5, 2009.
Infringement Chart—Samsung Omnia SGH-I900. U.S. Pat. No. 7,148,850, Fractus, Nov. 5, 2009.
Infringement Chart—Samsung Omnia SGH-I900. U.S. Pat. No. 7,202,822, Fractus, Nov. 5, 2009.
Infringement Chart—Samsung SCH-A630, Fractus, Nov. 5, 2009.
Infringement Chart—Samsung SCH-A630. U.S. Pat. No. 7,148,850, Fractus, Nov. 5, 2009.
Infringement Chart—Samsung SCH-A630. U.S. Pat. No. 7,202,822, Fractus, Nov. 5, 2009.
Infringement Chart—Samsung SCH-A645, Fractus, Nov. 5, 2009.
Infringement Chart—Samsung SCH-A645. U.S. Pat. No. 7,148,850, Fractus, Nov. 5, 2009.
Infringement Chart—Samsung SCH-A645. U.S. Pat. No. 7,202,822, Fractus, Nov. 5, 2009.
Infringement Chart—Samsung SCH-A870, Fractus, Nov. 5, 2009.
Infringement Chart—Samsung SCH-A887 Solstice. U.S. Pat. No. 7,148,850, Fractus, Nov. 5, 2009.
Infringement Chart—Samsung SCH-A887 Solstice. U.S. Pat. No. 7,202,822, Fractus, Nov. 5, 2009.
Infringement Chart—Samsung SCH-I910, Fractus, Nov. 5, 2009.
Infringement Chart—Samsung SCH-I910. U.S. Pat. No. 7,148,850, Fractus, Nov. 5, 2009.
Infringement Chart—Samsung SCH-I910. U.S. Pat. No. 7,202,822, Fractus, Nov. 5, 2009.
Infringement Chart—Samsung SCH-R430, Fractus, Nov. 5, 2009.
Infringement Chart—Samsung SCH-R430. U.S. Pat. No. 7,148,850, Fractus, Nov. 5, 2009.
Infringement Chart—Samsung SCH-R430. U.S. Pat. No. 7,202,822, Fractus, Nov. 5, 2009.
Infringement Chart—Samsung Spex R210a. U.S. Pat. No. 7,148,850, Fractus, Nov. 5, 2009.
Infringement Chart—Samsung Spex R210a. U.S. Pat. No. 7,202,822, Fractus, Nov. 5, 2009.
Infringement Chart—Samsung SPH-A523, Fractus, Nov. 5, 2009.
Infringement Chart—Samsung SPH-A523. U.S. Pat. No. 7,148,850, Fractus, Nov. 5, 2009.
Infringement Chart—Samsung SPH-A523. U.S. Pat. No. 7,202,822, Fractus, Nov. 5, 2009.
Infringement Chart—Samsung SPH-M550, Fractus, Nov. 5, 2009.
Infringement Chart—Samsung SPH-M550. U.S. Pat. No. 7,148,850, Fractus, Nov. 5, 2009.
Infringement Chart—Samsung SPH-M550. U.S. Pat. No. 7,202,822, Fractus, Nov. 5, 2009.
Infringement Chart—Samsung SPH M520, Fractus, Nov. 5, 2009.
Infringement Chart—Samsung SPH M520. U.S. Pat. No. 7,148,850, Fractus, Nov. 5, 2009.
Infringement Chart—Samsung SPH M520. U.S. Pat. No. 7,202,822, Fractus, Nov. 5, 2009.
Infringement Chart—Samsung SPH M540., Fractus, Nov. 5, 2009.
Infringement Chart—Samsung SPH M540. U.S. Pat. No. 7,148,850, Fractus, Nov. 5, 2009.
Infringement Chart—Samsung SPH M540. U.S. Pat. No. 7,202,822, Fractus, Nov. 5, 2009.
Infringement Chart—Samsung Sway SCH-U650, Fractus, Nov. 5, 2009.
Infringement Chart—Samsung Sway SCH-U650. U.S. Pat. No. 7,148,850, Fractus, Nov. 5, 2009.
Infringement Chart—Samsung Sway SCH-U650. U.S. Pat. No. 7,202,822, Fractus, Nov. 5, 2009.
Infringement Chart—Sanyo Katana II., Fractus, Nov. 5, 2009.
Infringement Chart—Sanyo Katana II. U.S. Pat. No. 7,148,850, Fractus, Nov. 5, 2009.
Infringement Chart—Sanyo Katana II. U.S. Pat. No. 7,202,822, Fractus, Nov. 5, 2009.
Infringement Chart—Sanyo Katana LX, Fractus, Nov. 5, 2009.
Infringement Chart—Sanyo Katana LX. U.S. Pat. No. 7,148,850, Fractus, Nov. 5, 2009.
Infringement Chart—Sanyo Katana LX. U.S. Pat. No. 7,202,822, Fractus, Nov. 5, 2009.
Infringement Chart—Sanyo S1, Fractus, Nov. 5, 2009.
Infringement Chart—Sanyo S1. U.S. Pat. No. 7,148,850, Fractus, Nov. 5, 2009.
Infringement Chart—Sanyo S1. U.S. Pat. No. 7,202,822, Fractus, Nov. 5, 2009.
Infringement Chart—Sanyo SCP 2700., Fractus, Nov. 5, 2009.
Infringement Chart—Sanyo SCP 2700. U.S. Pat. No. 7,1488,50, Fractus, Nov. 5, 2009.
Infringement Chart—Sanyo SCP 2700. U.S. Pat. No. 7,202,822, Fractus, Nov. 5, 2009.
Infringement Chart—Sharp Sidekick 3, Fractus, Nov. 5, 2009.
Infringement Chart—Sharp Sidekick 3. U.S. Pat. No. 7,148,850, Fractus, Nov. 5, 2009.
Infringement Chart—Sharp Sidekick 3. U.S. Pat. No. 7,202,822, Fractus, Nov. 5, 2009.
Infringement Chart—Sharp Sidekick 2008., Fractus, Nov. 5, 2009.
Infringement Chart—Sharp Sidekick 2008. U.S. Pat. No. 7,148,850, Fractus, Nov. 5, 2009.
Infringement Chart—Sharp Sidekick 2008. U.S. Pat. No. 7,202,822, Fractus, Nov. 5, 2009.
Infringement Chart—Sharp Sidekick LX 2009., Fractus, Nov. 5, 2009.
Infringement Chart—Sharp Sidekick LX 2009. U.S. Pat. No. 7,148,850, Fractus, Nov. 5, 2009.
Infringement Chart—Sharp Sidekick LX 2009. U.S. Pat. No. 7,202,822, Fractus, Nov. 5, 2009.
Infringement Chart—Sharp Sidekick LX. U.S. Pat. No. 7,148,850, Fractus, Nov. 5, 2009.
Infringement Chart—Sharp Sidekick LX. U.S. Pat. No. 7,202,822, Fractus, Nov. 5, 2009.
Infringement Chart—UTStarcom CDM7126., Fractus, Nov. 5, 2009.
Infringement Chart—UTStarcom CDM7126. U.S. Pat. No. 7,148,850, Fractus, Nov. 5, 2009.
Infringement Chart—UTStarcom CDM7126. U.S. Pat. No. 7,202,822, Fractus, Nov. 5, 2009.
Infringement Chart—UTStarcom Quickfire GTX75., Fractus, Nov. 5, 2009.
Infringement Chart—UTStarcom Quickfire GTX75. U.S. Pat. No. 7,148,850, Fractus, Nov. 5, 2009.
Infringement Chart—UTStarcom Quickfire GTX75. U.S. Pat. No. 7,202,822, Fractus, Nov. 5, 2009.
Claim construction and motion for summary judgement—Markman Hearing—[Defendants], Defendants, Sep. 2, 2010.
Defendant's Invalidity Contentions including appendix B and exhibits 6, 7, 10, 11 referenced in Space Filling Antenna, Defendants, Feb. 24, 2010.
Demonstratives presented by Dr. Steven Best during trial, Defendants, May 19, 2011.
Demonstratives presented by Dr. Stuart Long during trial, Fractus, May 18, 2011.

(56) **References Cited**

OTHER PUBLICATIONS

McDowell , E. P., High speed aircraft antenna problems and some specific solutions for MX-1554, USAF Antenna Research and Development Program, 2th , 1952. Symposium on the, Oct. 19, 1952.
McLean , J. S., A re-examination of the fundamental limits on the radiation q of electrically small antennas, Antennas and Propagation, IEEE Transactions on, May 1, 1996.
McSpadden , J. O., Design and experiments of a high-conversion-efficiency 5.8-GHz rectenna, Microwave Theory and Techniques, IEEE Transactions on, Dec. 1, 1998, vol. 46.
Mehaute, A., Fractal Geometrics, CRC Press---Case 6:09-cv-00203-LED-JDL, Jan. 1, 1990, p. 3-35.
Meier , K. ; Burkhard , M. ; Schmid , T. et al, Broadband calibration of E-field probes in Lossy Media, Microwave Theory and Techniques, IEEE Transactions on, Oct. 1, 1996, vol. 44, No. 10.
Meinke , H. ; Gundlah , F. V., Radio engineering reference book—vol. 1—Radio components. Circuits with lumped parameters . . . , State energy publishing house, Jan. 1, 1961, p. 4.
Misra , S., Experimental investigations on the impedance and radiation properties of a three-element concentric microstrip square-ring antenna, Microwave and Optical Technology Letters, Feb. 5, 1996, vol. 11, No. 2.
Misra , S. ; Chowdhury , S. K., Study of impedance and radiation properties of a concentric microstrip triangular-ring antenna and Its modeling techniques using FDTD method, Antennas and Propagation, IEEE Transactions on, Apr. 1, 1998, vol. 46, No. 4.
Model , A. M., Microwave filters in radiorelay systems, Svyaz, Moscow, Jan. 1, 1967.
Moheb , H., Design and development of co-polarized ku-band ground terminal system for very small aperture terminal (VSAT) application, Antennas and Propagation Society (APS), 1999. IEEE International Symposium, Jul. 11, 1999.
Moon , J. et al, A framework design for the next generation radio access system, Journal on Selected Areas in Communications , IEEE, Mar. 1, 2006.
Morishita , H. et al, Design concept of antennas for small mobile terminals and the future perspective, Antennas and Propagation Magazine, IEEE, Oct. 1, 2002.
Munson , R., Antenna engineering Handbook—Chapter 7—Microstrip Antennas, Johnson , R. C.—McGraw-Hill—Third Edition, Jan. 1, 1993.
Munson , R., Conformal microstrip array for a parabolic dish, USAF Antenna Research and Development Program, 23th , 1973. Symposium on the, Oct. 1, 1973.
Munson , R., Microstrip phased array antennas, USAF Antenna Research and Development Program, 22th , 1972. Symposium on the, Oct. 11, 1972.
Munson , R. E., Conformal microstrip communication antenna, USAF Antenna Research and Development Program, 23th , 1973. Symposium on the, Oct. 10, 1973.
Muramoto , M. et al, Characteristics of a small planar loop antenna, Antennas and Propagation, IEEE Transactions on, Dec. 1, 1997.
Murch , R. D. et al., Antenna systems for broadband wireless access, Communications Magazine, IEEE, Apr. 1, 2002.
Mushiake, Y., Self-Complementary Antennas : Principle of Self Complementarity for Constant Impedance, Springer, Jan. 1, 1996, p. 81-86.
Musser , G., Practical fractals, Scientific American Magazine, Jul. 1, 1999, vol. 281, No. 1.
NA, American Heritage College Dictionary (1997). pp. 340 and 1016, Mifflin Comp. Case 6:09-cv-00203-LED-JDL, Jan. 1, 1997, p. 340 , 1016.
NA, American Heritage Dictionary of the English Language, Houghton Mifflin Company, Jan. 1, 2000, p. 1306-1361.
NA, Applications of IE3D in designing planar and 3D antennas—Release 15.0, Mentor Graphics, Jan. 1, 2010.
NA, BenQ-Siemens EF81, S88 and S68, GSM Arena—www.gsmarena.com, Jan. 17, 2006.
NA, Collins Dictionary, Collins, Jan. 1, 1979, p. 608.
NA, Digital cellular telecommunications system (Phase 2) : Types of Mobile Stations (MX) (GSM 02.06), European Telecommunications Standard Institute (ETSI), May 9, 1996.
NA, Digital cellular telecommunications system (Phase 2 plus) ; Radio transmission and reception (GSM 05.05), European Telecommunications Standard Institute (ETSI), Jul. 1, 1996.
NA, Digital cellular telecommunications system (Phase2) : Abbreviations and acronyms (GSM01.04) GSM Technical Specification vs. 5.0.0, European Telecommunications Standard Institute (ETSI), Mar. 1, 1996.
NA, Digital cellular telecommunications system (Phase2). Mobile Station MS Conformance specifiaction Part 1 Conformance Specification GSM11.10-1), European Telecommunications Standard Institute (ETSI), Mar. 1, 1996.
NA, Digital cellular telecommunications system (Phase2); Mobile Station (MS) conformance specification; Part 1: Conformance specification (GSM 11.10-1 version 4.21.1), European Telecommunications Standard Institute (ETSI), Aug. 1, 1998.
NA, European Patent Convention—Article 123—Declaration of Jeffery D. Baxter—Exhibit JJJ, European Patent Office, Jan. 1, 2000, p. 132-133.
NA, FCC—United States table of frequency allocations, Federal Communications Commission (FCC), Oct. 1, 1999, p. 377-538.
NA, Fractal Antenna—Frequently asked questions, Fractal Antenna Systems, Jan. 1, 2011.
NA, FractalComs web---www.tsc.upc.es/fractalcoms/, Universitat Politecnica de Catalunya (UPC).
NA, Fractus web---www.fractus.com/main/fractus/corporate/, Fractus SA, Oct. 7, 2010.
NA, GSM Technical specification and related materials, European Telecommunications Standard Institute (ETSI), Mar. 1, 1996.
NA, Hagenuk mobile phone—Antenna photo—Technical specs—User manual, Hagenuk Telecom GmbH, Jan. 1, 1996.
NA, Handset and antenna analysis—Next-IP project, IPR Department—Fractus, SA, May 1, 2006.
NA, IE3D User's Manual, Mentor Graphics, Jan. 1, 2010, vol. 15.0.
NA, IEEE Standard definitions of terms for antennas, IEEE Std. 145-1983, The Institute of Electrical and Electronic Engineers (IEEE), Jun. 22, 1983.
NA, IEEE Standard Dictionary of Electrical and Electronics Terms, IEEE Press (6th ed.), Jan. 1, 1996, p. 359, 688, and 878.
NA, IEEE Standard dictionary of electrical and electronics terms, IEEE Standard (6th ed.), Jan. 1, 1996, vol., No., pp. 229, 431, 595, 857.
NA, In Focus—Making TV mobile ; Making mobiles accessible ; Wi-Fi sidles up to cellular etc, Nokia, Nov. 1, 2005.
NA, Int'l Electro-Technical Commission IEV No. 712-01-04—Electropedia : the world's online electrotechnical vocabulary, Electropedia—http://www.electropedia.org, Apr. 1, 1998.
NA, Letter to FCC—Application form 731 and Engineering Test Report by Nokia Mobile Phones for FCC ID: LJPNSW-6NX, M. Flom Associates (MFA), Apr. 1, 1999.
NA, Merriam-Webster's Collegiate Dictionary (1993)—Declaration of J. Baxter—Exhibit CC, Merriam-Webster's. Case 6:09-cv-00203-LED-JDL, Jan. 1, 1993, p. 863.
NA, Motorola 2000x pager, Motorola, Jun. 13, 1997.
NA, Motorola Advisor Elite mobile phone—Antenna photos—User manual, Motorola, Jan. 1, 1997.
NA, Motorola Advisor Gold FLX pager, Motorola, Aug. 1, 1996.
NA, Motorola Bravo Plus pager, Motorola, Mar. 3, 1995.
U.S. Appl. No. 95/001,413—U.S. Appl. No. 95/000,593—U.S. Appl. No. 95/000,598—Patent owner's response to first office action for U.S. Pat. No. 7,148,850 of Jul. 29, 2011, Sterne Kessler Goldstein Fox, Oct. 31, 2011.
U.S. Appl. No. 95/001,414—Corrected Patent Owner's Response to Office Action of Oct. 8, 2010 of U.S. Pat. No. 7,202,822, Sterne Kessler Goldstein Fox, Apr. 11, 2011.
U.S. Appl. No. 95/001,414---Office action for the U.S. Pat. No. 7,202,822 dated on Oct. 8, 2010, USPTO, Oct. 8, 2010.
U.S. Appl. No. 95/001,414—Request for inter partes reexamination for U.S. Pat. No. 7,202,822 including claim charts from CC-A-1 to CCD, Samsung, Aug. 4, 2010.

(56) **References Cited**

OTHER PUBLICATIONS

U.S. Appl. No. 95/001,414—Request for inter partes reexamination for U.S. Pat. No. 7,202,822—CC-A-1—Claim chart comparing claims 1, 4-5, 7-9, 20-21, 25 and 31 of U.S. Pat. No. 7,202,822 to U.S. Pat. No. 6,140,975, Samsung, Aug. 9, 2010.
U.S. Appl. No. 95/001,414—Request for inter partes reexamination for U.S. Pat. No. 7,202,822—CC-D—Claim Chart Comparing claims 1, 4-5, 7-9, 12, 13, 15, 18, 21, 25, 29-31, 35, 44, 46, 48 and 52 of U.S. Pat. No. 7,202,822 to U.S. Pat. No. 5,363,114 to Shoemaker, Samsung, Aug. 4, 2010.
U.S. Appl. No. 95/001,414—Request for inter partes reexamination for U.S. Pat. No. 7,202,822 issued Apr. 10, 2007—CC-C—Claim Chart Comparing claims 1, 4, 5, 7-9, 12, 13, 15, 18, 21, 25, 29-31, 35, 44, 46, 48 and 52 of U.S. Pat. No. 7,202,822 to Sanad., Samsung, Aug. 4, 2010.
U.S. Appl. No. 95/001,414—Request for inter partes reexamination for U.S. Pat. No. 7,202,822. Exhibit CC-A-2. Claim chart comparing claims 1, 4-5, 7-9, 12-13, 15, 18, 20-22, and 31 of U.S. Pat. No. 7,202,822 to U.S. Pat. No. 6,140,975, Samsung, Aug. 9, 2010.
U.S. Appl. No. 95/001,414—Request for inter partes reexamination for U.S. Pat. No. 7,202,822. Exhibit CC-A-3. Claim Chart Comparing claims 1, 4, 5, 7-9, 12, 13, 15, 18, 20-25, 29-31, 35, 44, 46, 48, 52 and 53 of U.S. Pat. No. 7,202,822 to U.S. Pat. No. 6,140,975, Samsung, Aug. 9, 2010.
U.S. Appl. No. 95/001,414—Request for inter partes reexamination for U.S. Pat. No. 7,202,822. Exhibit CC-A-4 Claim Chart Comparing claims 1, 4, 5, 7-9, 12, 13, 15, 18, 20-25, 29-31, 35, 44, 46, 48, 52 and 53 of U.S. Pat. No. 7,202,822 to U.S. Pat. No. 6,140,975, Samsung, Aug. 9, 2010.
U.S. Appl. No. 95/001,414—Request for inter partes reexamination for U.S. Pat. No. 7,202,822. Exhibit CC-B Claim Chart Comparing claims 1, 4, 5, 7-9, 13, 15, 18, 20-25, 29-31, 35, 44, 46, 48, 52, and 53 of U.S. Pat. No. 7,202,822 to Sekine, Samsung, Aug. 9, 2010.
U.S. Appl. No. 95/001,414—Request for inter partes reexamination of U.S. Pat. No. 7,202,822 issued Apr. 10, 2007—●TH-B—Samsung SCH U340, Samsung, Aug. 10, 2010.
U.S. Appl. No. 95/001,414—Request for inter partes reexamination of U.S. Pat. No. 7,202,822 issued Apr. 10, 2007—●TH-C—Samsung SCH-R500, Samsung, Aug. 10, 2010.
U.S. Appl. No. 95/001,414—Request for inter partes reexamination of U.S. Pat. No. 7,202,822 issued Apr. 10, 2007—●TH-D—Civil Action No. 6:09-cv-00203, Samsung, May 28, 2010.
U.S. Appl. No. 95/001,414—Third party requester's comments to patent owner's reply dated on Jan. 10, 2011 for U.S. Pat. No. 7,202,822, Samsung, Feb. 9, 2011.
U.S. Appl. No. 95/001,414—U.S. Appl. No. 95/000,592—Action closing prosecution dated Aug. 9, 2012 for U.S. Pat. No. 7,202,822, USPT●, Aug. 9, 2012.
U.S. Appl. No. 95/001,414—U.S. Appl. No. 95/000,592—Action Closing Prosecution dated on Apr. 20, 2012 for U.S. Pat. No. 7,202,822, USPT●, Apr. 20, 2012.
U.S. Appl. No. 95/001,414—U.S. Appl. No. 95/000,592—Patent owner amendment in response to Right of Appeal Notice mailed on Dec. 13, 2012 for U.S. Pat. No. 7,202,822, Edell , Shapiro & Finnan , LLC, Mar. 13, 2013.
U.S. Appl. No. 95/001,414—U.S. Appl. No. 95/000,592—Right of appeal notice for the U.S. Pat. No. 7,202,822, USPT●, Dec. 17, 2012.
U.S. Appl. No. 95/001,414—U.S. Appl. No. 95/000,592—U.S. Appl. No. 95/000,610—Decision Sua Sponte to merge reexamination proceedings of U.S. Pat. No. 7,202,822, USPT●, Jun. 7, 2011.
U.S. Appl. No. 95/001,414—U.S. Appl. No. 95/000,592—U.S. Appl. No. 95/000,610—●ffice Action of U.S. Pat. No. 7,202,822 dated Jul. 29, 2011, USPT●, Jul. 29, 2011.
U.S. Appl. No. 95/001,414—U.S. Appl. No. 95/000,592—U.S. Appl. No. 95/000,610—Patent owner's response to first office action of Jul. 29, 2011 of U.S. Pat. No. 7,202,822, Sterne Kessler Goldstein Fox, ●ct. 31, 2011.
U.S. Appl. No. 95/001,414—U.S. Appl. No. 95/000,592—U.S. Appl. No. 95/000,610—Third party requester's comments to patent owner's response of ●ct. 31, 2011 for U.S. Pat. No. 7,202,822, Samsung—Kyocera—HTC, Mar. 23, 2012.
U.S. Appl. No. 13/020,034—Communication to examiner and preliminary amendment, Howison & Arnott, Jul. 24, 2012.
U.S. Appl. No. 13/020,034—Notice of allowance dated Apr. 23, 2012, USPT●, Apr. 23, 2012.
U.S. Appl. No. 13/020,034—Notice of allowance dated Jan. 15, 2013, USPT●, Jan. 15, 2013.
U.S. Appl. No. 13/020,034—Notice of allowance dated on Apr. 3, 2013, USPT●, Apr. 3, 2013.
U.S. Appl. No. 13/020,034—●ffice Action dated on Nov. 8, 2011, USPT●, Nov. 8, 2011.
U.S. Appl. No. 13/038,883—Amendment and response to office action dated Dec. 1, 2011, Howison & Arnott, Apr. 3, 2012.
U.S. Appl. No. 13/038,883—Amendment and response to office action dated on Jul. 2, 2013, Howison and Arnott, Jul. 25, 2013.
U.S. Appl. No. 13/038,883—Amendment to the claims and RCE, Howison & Arnott, Jun. 7, 2013.
U.S. Appl. No. 13/038,883—Communication to examiner and preliminary amendment, Howison & Arnott, Aug. 10, 2012.
U.S. Appl. No. 13/038,883—Notice of allowance dated Apr. 30, 2012, USPT●, Apr. 30, 2012.
U.S. Appl. No. 13/038,883—Notice of allowance dated Aug. 6, 2013, USPT●, Aug. 6, 2013.
U.S. Appl. No. 13/038,883—Notice of Allowance dated on Apr. 2, 2013, USPT●, Apr. 2, 2013.
U.S. Appl. No. 13/038,883—●ffice action dated on Dec. 1, 2011, USPT●, Dec. 1, 2011.
U.S. Appl. No. 13/038,883—●ffice action dated on Jul. 2, 2013, USPT●, Jul. 2, 2013.
U.S. Appl. No. 13/044,207—Amendment and response to office action dated on Dec. 5, 2011, Howison & Arnott, Apr. 3, 2012.
U.S. Appl. No. 13/044,207—Amendment and response to office action dated on Jul. 2, 2013, Howison and Arnott, Jul. 25, 2013.
U.S. Appl. No. 13/044,207—Amendment to the claims and RCE, Howison & Arnott, Jun. 7, 2013.
U.S. Appl. No. 13/044,207—Communication to examiner and preliminary amendment, Howison & Arnott, Aug. 14, 2012.
U.S. Appl. No. 13/044,207—Notice of allowance dated Aug. 5, 2013, USPT●, Aug. 5, 2013.
U.S. Appl. No. 13/044,207—Notice of allowance dated May 1, 2012, USPT●, May 1, 2012.
U.S. Appl. No. 13/044,207—Notice of Allowance dated on Apr. 2, 2013, USPT●, Apr. 2, 2013.
U.S. Appl. No. 13/044,207—●ffice action dated on Dec. 5, 2011, USPT●, Dec. 5, 2011.
U.S. Appl. No. 13/044,207—●ffice action dated on Jul. 2, 2013, USPT●, Jul. 2, 2013.
U.S. Appl. No. 95/000,592—Request for inter partes reexamination for U.S. Pat. No. 7,202,822 including exhibits from CC1 to CC6, Kyocera, Nov. 16, 2010.
U.S. Appl. No. 95/000,593—Request for inter partes reexamination for U.S. Pat. No. 7,148,850 including exhibits from CC1 to CC7, Kyocera, Nov. 16, 2010.
U.S. Appl. No. 95/000,598—Request for inter partes reexamination for U.S. Pat. No. 7,148,850 including exhibits from C1 to F3, HTC, Dec. 3, 2010.
U.S. Appl. No. 95/000,610—Request for inter partes reexamination of U.S. Pat. No. 7,202,822 including exhibits C1-I5, HTC, Dec. 14, 2010.
U.S. Appl. No. 95/001,389—●ffice Action for the U.S. Pat. No. 7,123,208 dated on Aug. 12, 2010, USPT●, Aug. 12, 2010.
U.S. Appl. No. 95/001,390—●ffice Action for the U.S. Pat. No. 7,015,868 dated Aug. 19, 2010, USPT●, Aug. 19, 2010.
U.S. Appl. No. 95/001,390—Response to the ●ffice Action for the U.S. Pat. No. 7,015,868 dated on Aug. 19, 2010, Sterne Kessler Goldstein Fox, Nov. 19, 2010.
U.S. Appl. No. 95/001,413—Request for inter partes reexamination for U.S. Pat. No. 7,148,850 including claim charts from CC-A to CC-F, Samsung, Aug. 4, 2010.
U.S. Appl. No. 95/001,413—Request for inter partes reexamination for U.S. Pat. No. 7,148,850. CC-F: Claim Chart Comparing Claims

(56) **References Cited**

OTHER PUBLICATIONS

1, 4, 6, 16, 17, 19, 21, 22, 24-26, 29, 35, 38, 40, 45-48, 51, 53, 57, 58, 61, 65, 66, 69, and 70 to U.S. Pat. No. 5,363,114 Shoemaker, Samsung, Aug. 1, 2010.

U.S. Appl. No. 95/001,413—Request for inter partes reexamination for U.S. Pat. No. 7,148,850. CC-A: Claim Chart Comparing Claims 1, 4, 6, 17, 19, 21, 22, 24-26, 29, 35, 38, 40, 45-48, 51, 53, 58, 61, 65, 66, 69, and 70 to U.S. Pat. No. 6,140,975 Cohen, Samsung, Aug. 1, 2010.

U.S. Appl. No. 95/001,413—Request for inter partes reexamination for U.S. Pat. No. 7,148,850. CC-B: Claim Chart Comparing Claims 1, 4, 6, 16, 17, 19, 21, 22, 24-26, 29, 35, 38, 40, 45-48, 51, 53, 57, 58, 61, 65, 66, 69 and 70 to U.S. Pat. No. 6,140,975 Cohen, Samsung, Aug. 1, 2010.

U.S. Appl. No. 95/001,413—Request for inter partes reexamination for U.S. Pat. No. 7,148,850. CC-C: Claim Chart Comparing Claims 1, 4, 6, 17, 19, 21, 22, 24-26, 29, 35, 38, 40, 45-48, 53, 58, 61, 65, 66, and 69 to U.S. Pat. No. 6,140,975 Cohen, Samsung, Aug. 1, 2010.

U.S. Appl. No. 95/001,413—Request for inter partes reexamination for U.S. Pat. No. 7,148,850. CC-D: Claim Chart Comparing Claims 1, 4, 6, 16, 17, 19, 21, 22, 24-26, 29, 35, 38, 40, 45-48, 51, 53, 57, 58, 61, 65, 66, and 69 to U.S. Pat. No. 6,140,975 Cohen, Samsung, Aug. 1, 2010.

U.S. Appl. No. 95/001,413—Request for inter partes reexamination for U.S. Pat. No. 7,148,850. CC-E: Claim Chart Comparing Claims 1, 4, 6, 16-17, 19, 21, 22, 24-26, 29, 35, 38, 40, 45-48, 51, 53, 57, 58, 61, 65, 66, 69 and 70 to patent EP0590671B1 Sekine, Samsung, Aug. 1, 2010.

U.S. Appl. No. 95/001,413—U.S. Appl. No. 95/000,593—Action Closing Prosecution dated on Apr. 20, 2012 for U.S. Pat. No. 7,148,850, USPTO, Apr. 20, 2012.

U.S. Appl. No. 95/001,413—U.S. Appl. No. 95/000,593—Action closing prosecution dated on Jul. 27, 2012 for U.S. Pat. No. 7,148,850, USPTO, Jul. 27, 2012.

U.S. Appl. No. 95/001,413—U.S. Appl. No. 95/000,593—Inter partes reexamination certificate for U.S. Pat. No. 7,148,850, USPTO, Jun. 6, 2013.

U.S. Appl. No. 95/001,413—U.S. Appl. No. 95/000,593—Patent owner amendment in response to the Right of Appeal Notice mailed Dec. 13, 2012 for U.S. Pat. No. 7,148,850, Edell , Shapiro & Finnan, LLC, Mar. 13, 2013.

U.S. Appl. No. 95/001,413—U.S. Appl. No. 95/000,593—Right of appeal notice for the U.S. Pat. No. 7,148,850, USPTO, Dec. 13, 2012.

U.S. Appl. No. 95/001,413—U.S. Appl. No. 95/000,593—Third party requester's comments to patent owner's response of Oct. 31, 2011 for JS patent 7148850, Samsung—Kyocera, Mar. 23, 2012.

U.S. Appl. No. 95/001,413—U.S. Appl. No. 95/000,593—U.S. Appl. No. 95/000,598—Third party requester's comments to patent owner's reply dated on Apr. 11, 2011 for U.S. Pat. No. 7,148,850, Samsung—Kyocera—HTC, May 2, 2011.

U.S. Appl. No. 95/001,413—U.S. Appl. No. 95/000,593—U.S. Appl. No. 95/000,598—Third party requester's comments to patent owner's reply dated on Jan. 10, 2011 for U.S. Pat. No. 7,148,850, Samsung—Kyocera—HTC, Feb. 9, 2011.

U.S. Appl. No. 95/001,413—U.S. Appl. No. 95/000,593—U.S. Appl. No. 95/000,598—Corrected Patent Owner's Response to First Office Action of Oct. 8, 2010 of U.S. Pat. No. 7,148,850, Sterne Kessler Goldstein Fox, Apr. 11, 2011.

U.S. Appl. No. 95/001,413—U.S. Appl. No. 95/000,593—U.S. Appl. No. 95/000,598—Corrected Patent Owner's Response to First Office Action of Oct. 3, 2010 of U.S. Pat. No. 7,148,850—Exhibit 1, Sterne Kessler Goldstein Fox, Apr. 11, 2011.

U.S. Appl. No. 95/001,413—U.S. Appl. No. 95/000,593—U.S. Appl. No. 95/000,598—Decision Sua Sponte to merge reexamination proceedings of U.S. Pat. No. 7,148,850, USPTO, Jun. 8, 2011.

U.S. Appl. No. 95/001,413—U.S. Appl. No. 95/000,593—U.S. Appl. No. 95/000,598—Office action for the U.S. Pat. No. 7,148,850 dated on Oct. 8, 2010, USPTO, Oct. 8, 2010.

U.S. Appl. No. 95/001,413—U.S. Appl. No. 95/000,593—U.S. Appl. No. 95/000,598—Office Action of U.S. Pat. No. 7,148,850 dated Jul. 29, 2011, USPTO, Jul. 29, 2011.

Infringement Chart—HTC Touch Pro. U.S. Pat. No. 7,148,850, Fractus, Nov. 5, 2009.

Infringement Chart—HTC Touch Pro. U.S. Pat. No. 7,202,822, Fractus, Nov. 5, 2009.

Infringement Chart—HTC Wing, Fractus, Nov. 5, 2009.

Infringement Chart—HTC Wing. U.S. Pat. No. 7,148,850, Fractus, Nov. 5, 2009.

Infringement Chart—HTC Wing. U.S. Pat. No. 7,202,822, Fractus, Nov. 5, 2009.

Infringement Chart—Kyocera Jax, Fractus, Nov. 5, 2009.

Infringement Chart—Kyocera Jax. U.S. Pat. No. 7,148,850, Fractus, Nov. 5, 2009.

Infringement Chart—Kyocera Jax. U.S. Pat. No. 7,202,822, Fractus, Nov. 5, 2009.

Infringement Chart—Kyocera MARBL, Fractus, Nov. 5, 2009.

Infringement Chart—Kyocera MARBL. U.S. Pat. No. 7,148,850, Fractus, Nov. 5, 2009.

Infringement Chart—Kyocera MARBL. U.S. Pat. No. 7,202,822, Fractus, Nov. 5, 2009.

Infringement Chart—Kyocera NEO E1100, Fractus, Nov. 5, 2009.

Infringement Chart—Kyocera NEO E1100. U.S. Pat. No. 7,148,850, Fractus, Nov. 5, 2009.

Infringement Chart—Kyocera NEO E1100. U.S. Pat. No. 7,202,822, Fractus, Nov. 5, 2009.

Infringement Chart—Kyocera S2400, Fractus, Nov. 5, 2009.

Infringement Chart—Kyocera S2400. U.S. Pat. No. 7,148,850, Fractus, Nov. 5, 2009.

Infringement Chart—Kyocera S2400. U.S. Pat. No. 7,202,822, Fractus, Nov. 5, 2009.

Infringement Chart—Kyocera Wildcard M1000, Fractus, Nov. 5, 2009.

Infringement Chart—Kyocera Wildcard M1000. U.S. Pat. No. 7,148,850, Fractus, Nov. 5, 2009.

Infringement Chart—Kyocera Wildcard M1000. U.S. Pat. No. 7,202,822, Fractus, Nov. 5, 2009.

Infringement Chart—LG 300G., Fractus, Nov. 5, 2009.

Infringement Chart—LG 300G. U.S. Pat. No. 7,148,850, Fractus, Nov. 5, 2009.

Infringement Chart—LG 300G. U.S. Pat. No. 7,202,822, Fractus, Nov. 5, 2009.

Infringement Chart—LG Aloha LX140., Fractus, Nov. 5, 2009.

Infringement Chart—LG Aloha LX140. U.S. Pat. No. 7,148,850, Fractus, Nov. 5, 2009.

Infringement Chart—LG Aloha LX140. U.S. Pat. No. 7,202,822, Fractus, Nov. 5, 2009.

Infringement Chart—LG AX155., Fractus, Nov. 5, 2009.

Infringement Chart—LG AX155. U.S. Pat. No. 7,148,850, Fractus, Nov. 5, 2009.

Infringement Chart—LG AX155. U.S. Pat. No. 7,202,822, Fractus, Nov. 5, 2009.

Infringement Chart—LG AX300, Fractus, Nov. 5, 2009.

Infringement Chart—LG AX300. U.S. Pat. No. 7,148,850, Fractus, Nov. 5, 2009.

Infringement Chart—LG AX300. U.S. Pat. No. 7,202,822, Fractus, Nov. 5, 2009.

Infringement Chart—LG AX380, Fractus, Nov. 5, 2009.

Infringement Chart—LG AX380. U.S. Pat. No. 7,148,850, Fractus, Nov. 5, 2009.

Infringement Chart—LG AX380. U.S. Pat. No. 7,202,822, Fractus, Nov. 5, 2009.

Infringement Chart—LG AX585., Fractus, Nov. 5, 2009.

Infringement Chart—LG AX585. U.S. Pat. No. 7,148,850, Fractus, Nov. 5, 2009.

Infringement Chart—LG AX585. U.S. Pat. No. 7,202,822, Fractus, Nov. 5, 2009.

Infringement Chart—LG AX8600, Fractus, Nov. 5, 2009.

Infringement Chart—LG AX8600. U.S. Pat. No. 7,148,850, Fractus, Nov. 5, 2009.

Infringement Chart—LG AX8600. U.S. Pat. No. 7,202,822, Fractus, Nov. 5, 2009.

(56) **References Cited**

OTHER PUBLICATIONS

Infringement Chart—LG CF360., Fractus, Nov. 5, 2009.
Infringement Chart—LG CF360. U.S. Pat. No. 7,148,850, Fractus, Nov. 5, 2009.
Infringement Chart—LG CF360. U.S. Pat. No. 7,202,822, Fractus, Nov. 5, 2009.
Infringement Chart—LG Chocolate VX8550, Fractus, Nov. 5, 2009.
Infringement Chart—LG Chocolate VX8550. U.S. Pat. No. 7,148,850, Fractus, Nov. 5, 2009.
Infringement Chart—LG Chocolate VX8550. U.S. Pat. No. 7,202,822, Fractus, Nov. 5, 2009.
Infringement Chart—LG CU515, Fractus, Nov. 5, 2009.
Infringement Chart—LG CU515. U.S. Pat. No. 7,148,850, Fractus, Nov. 5, 2009.
Infringement Chart—LG CU515. U.S. Pat. No. 7,202,822, Fractus, Nov. 5, 2009.

* cited by examiner

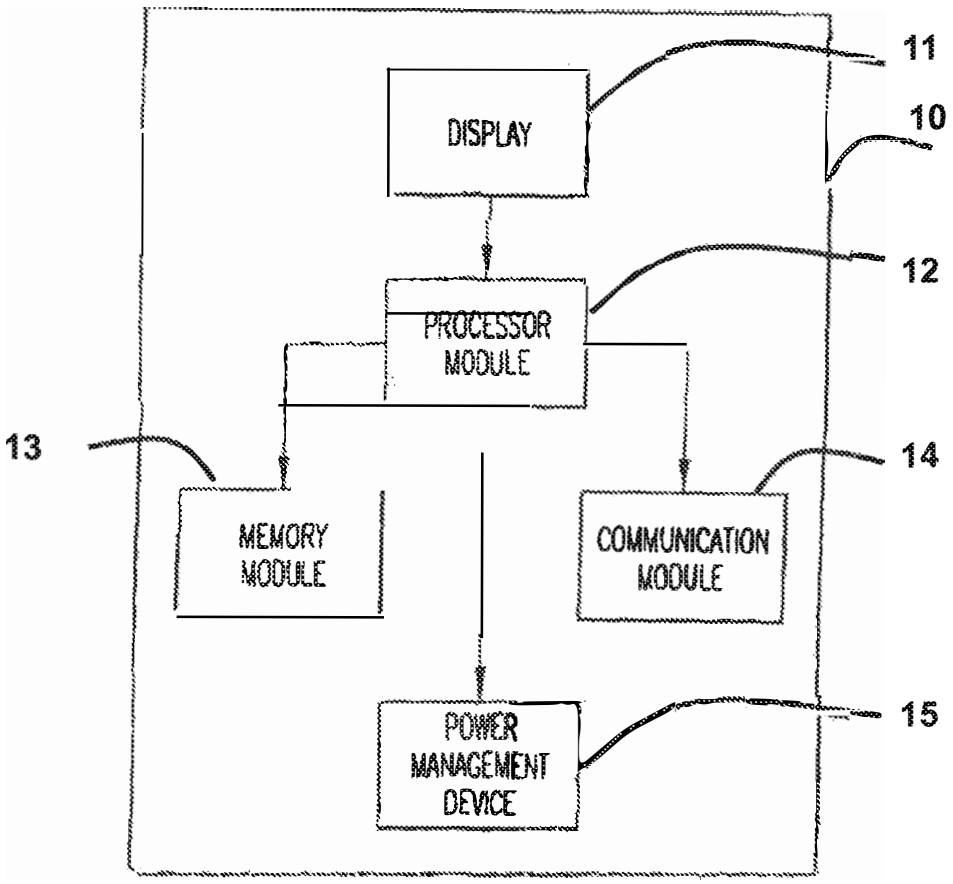
11
10
DISPLAY
12
PROCESSOR MODULE
13
14
MEMORY MODULE
COMMUNICATION MODULE
15
POWER MANAGEMENT DEVICE

FIG. 1A

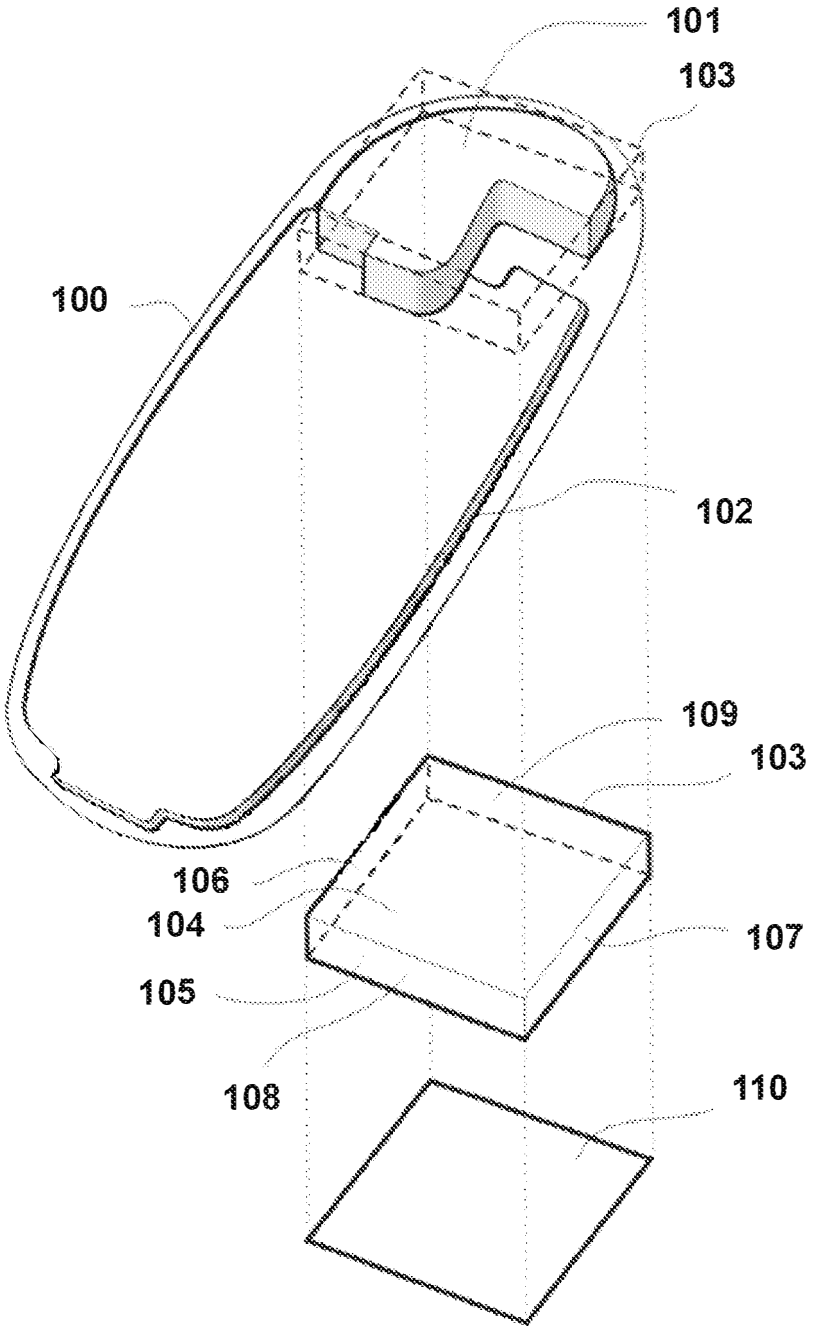

FIG. 1B

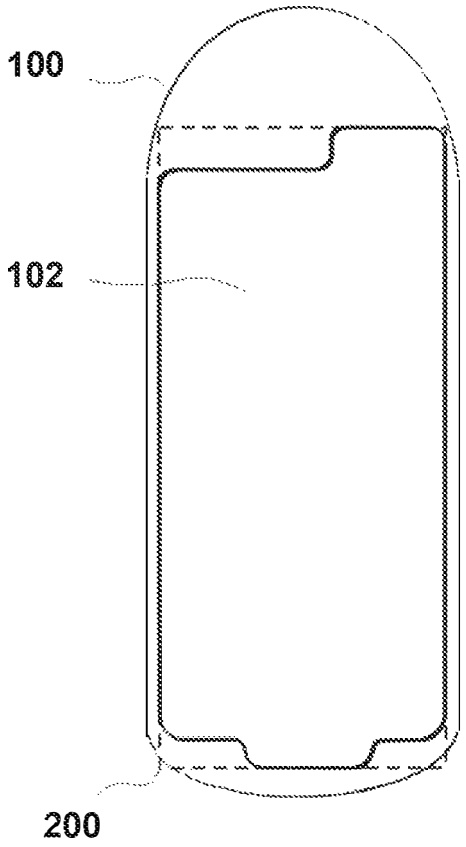

FIG. 2A

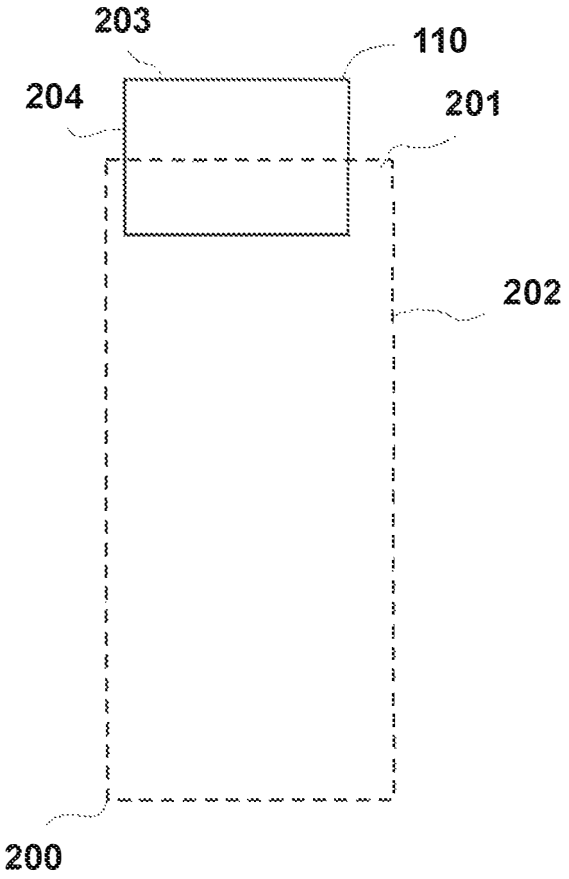

FIG. 2B

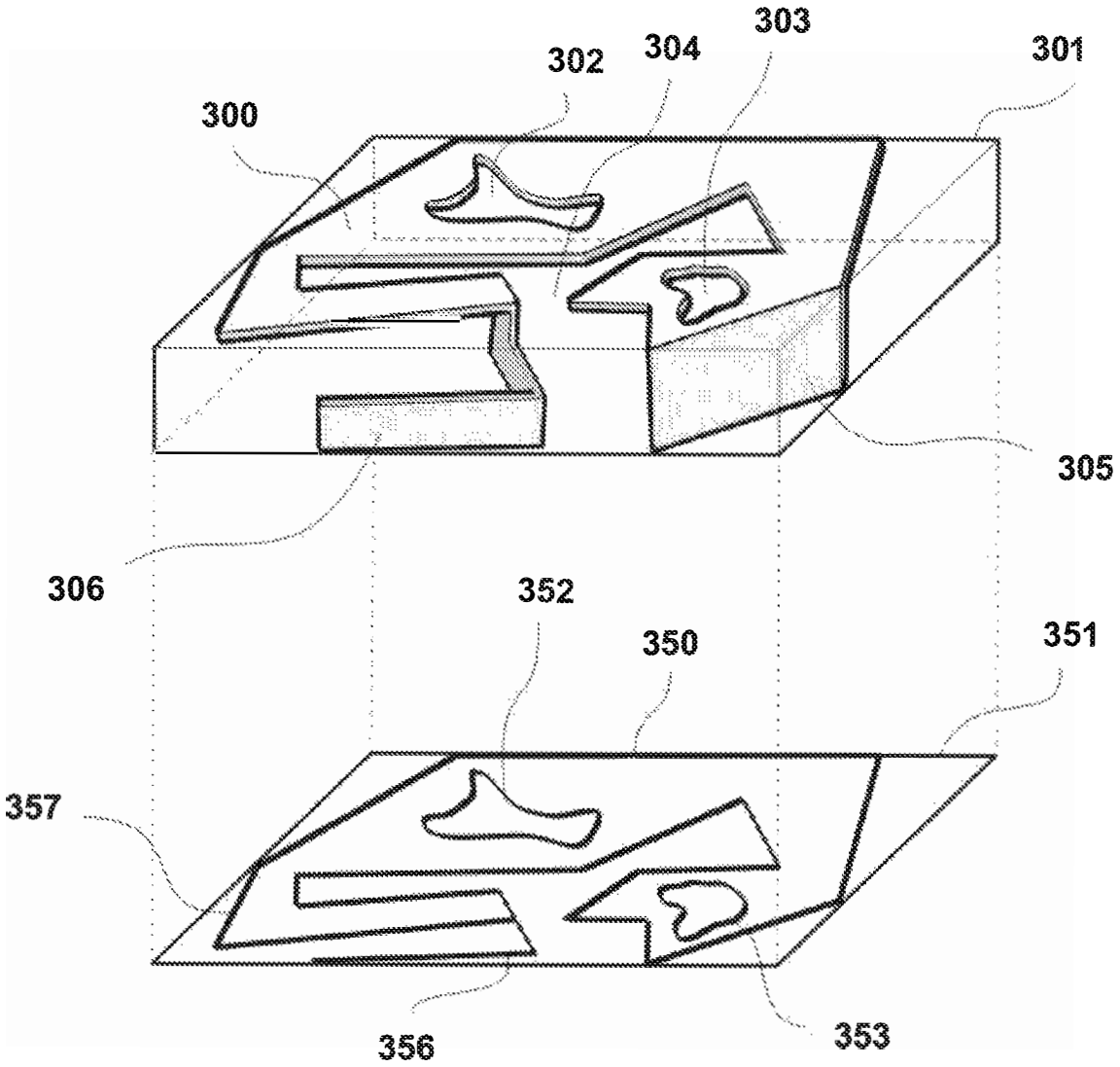

FIG. 3

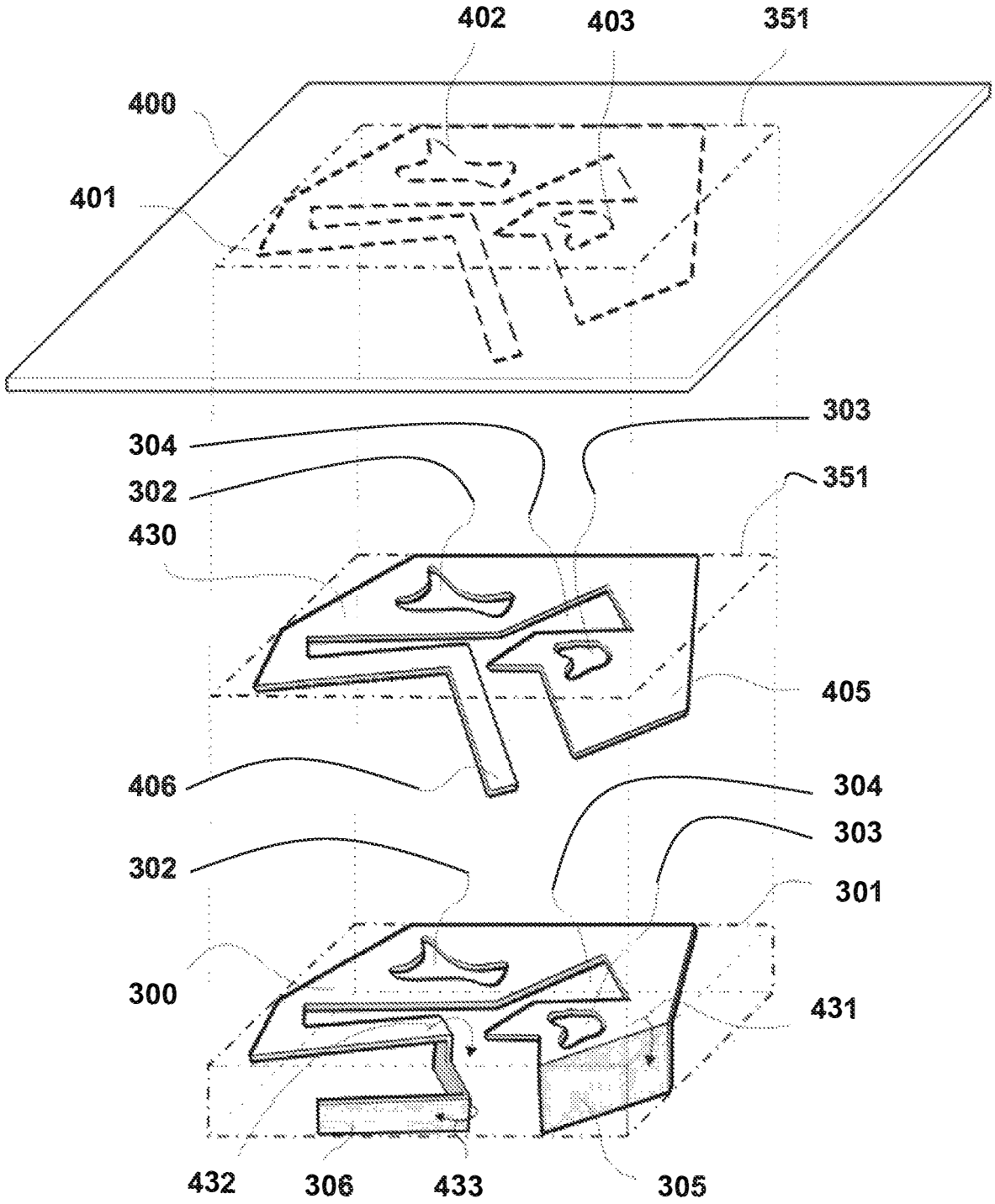
402
403
351
400
401
303
304
302
351
430
405
406
304
303
302
301
300
431
432
306
433
305

FIG. 4

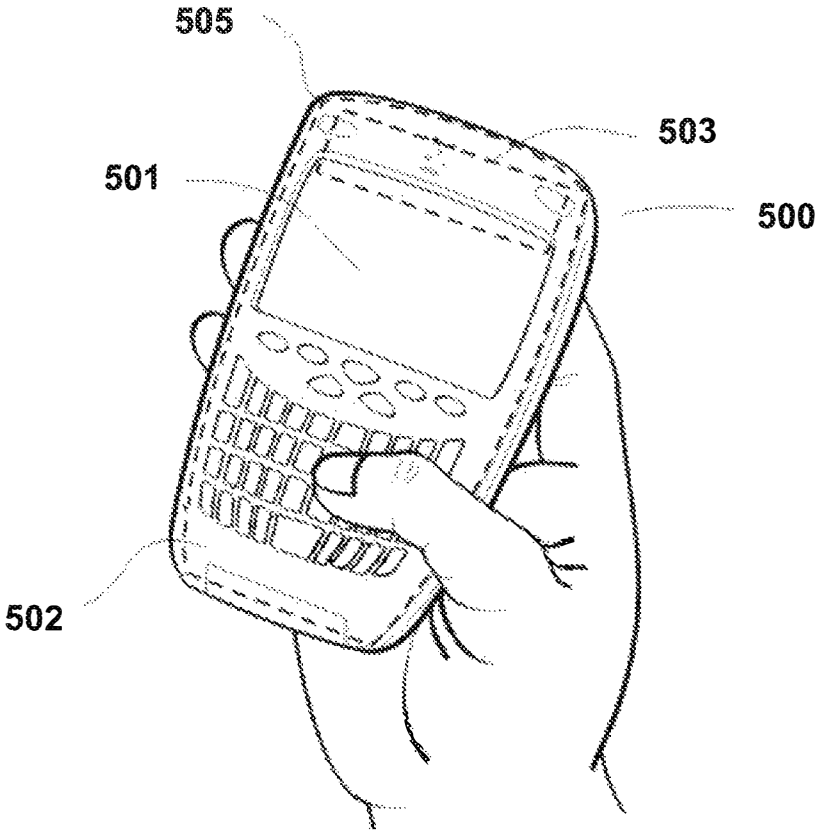

FIG. 5A

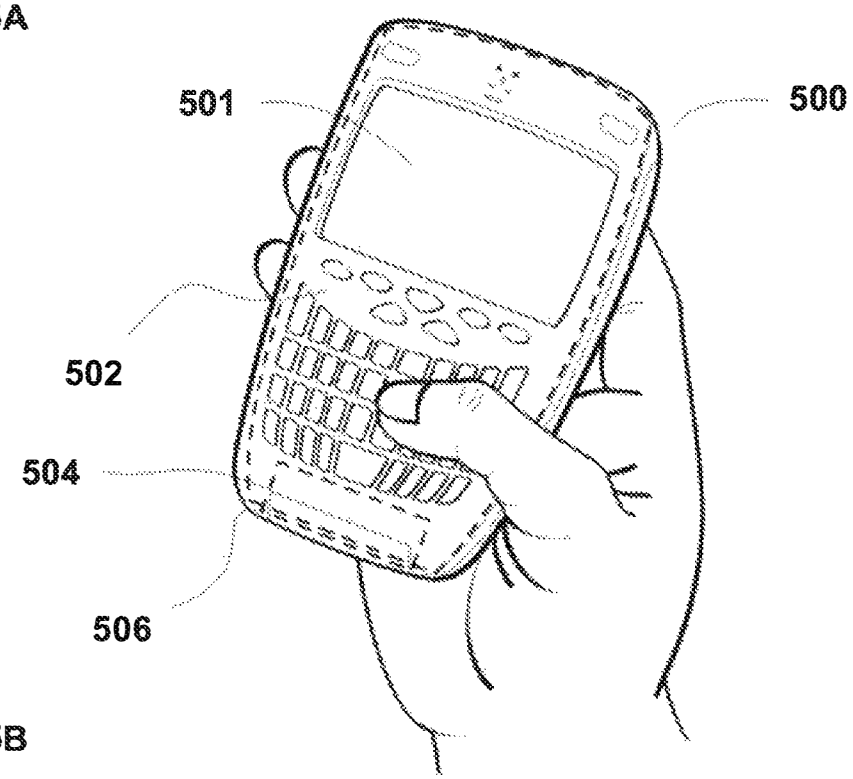

FIG. 5B

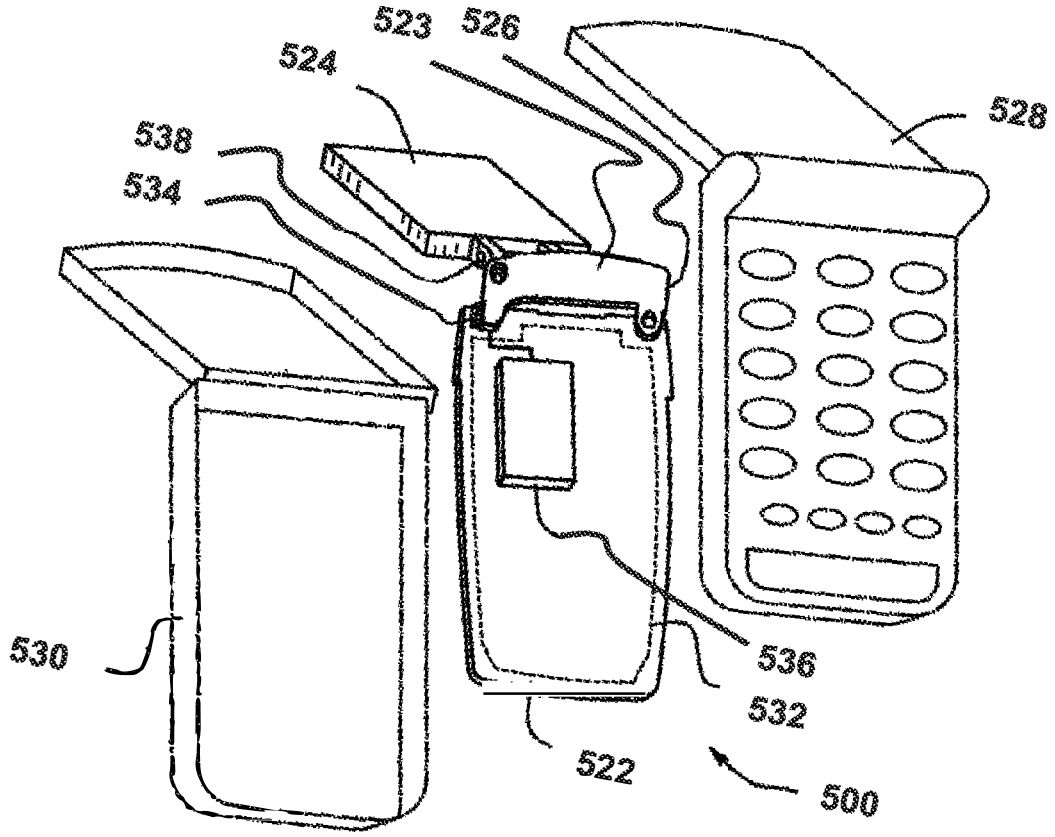

FIG. 5C

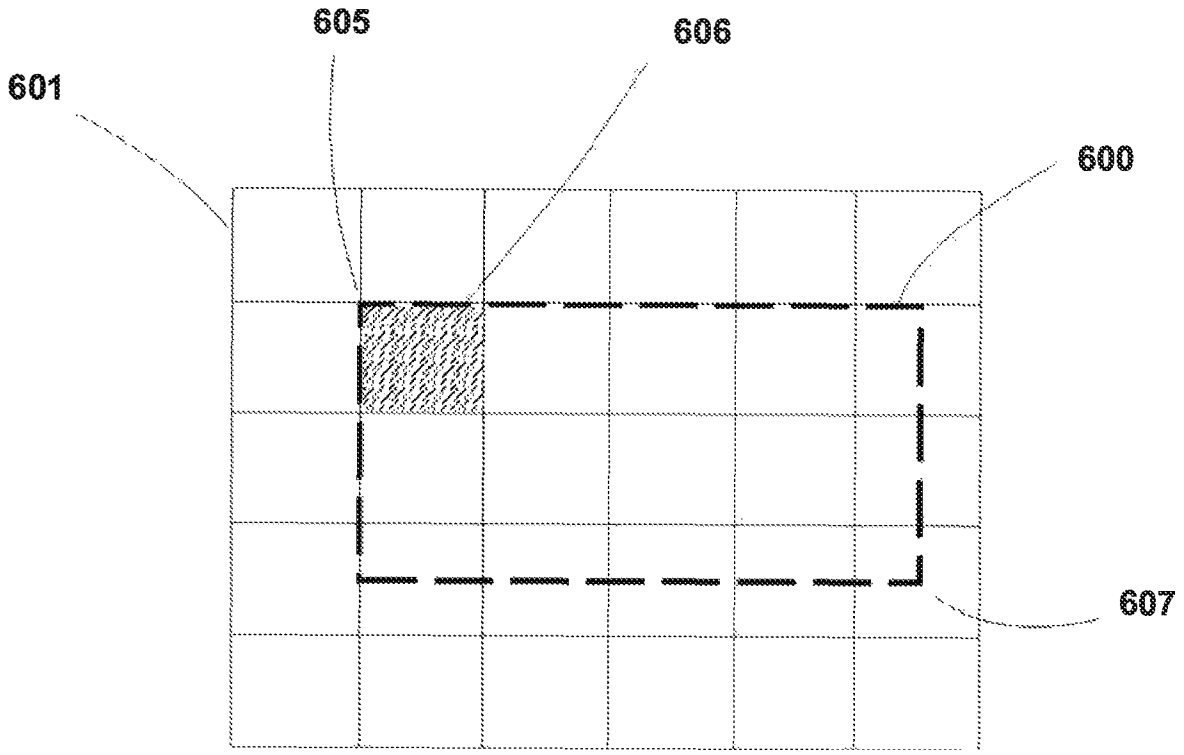

FIG. 6A

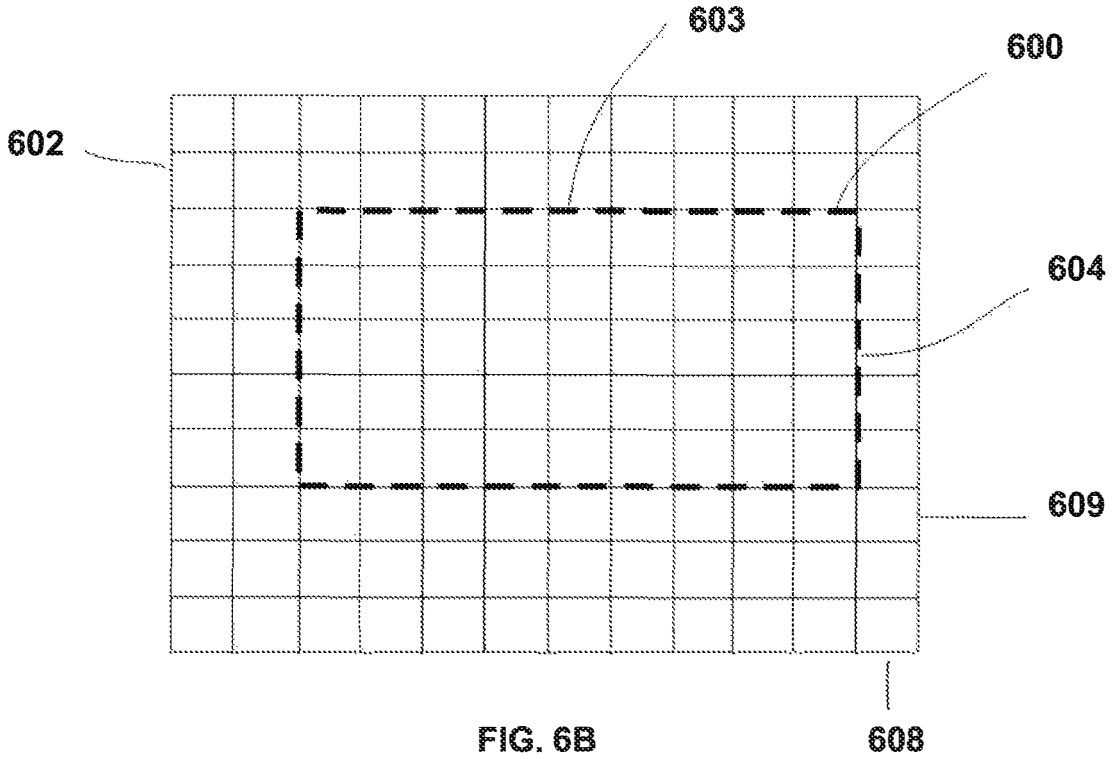

FIG. 6B

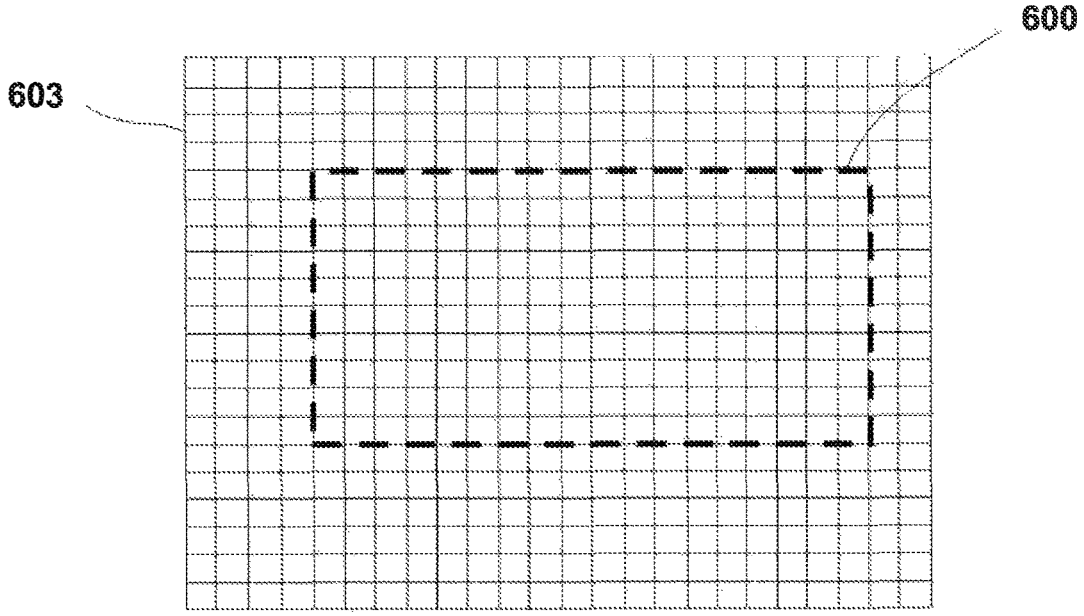
600
603

FIG. 6C

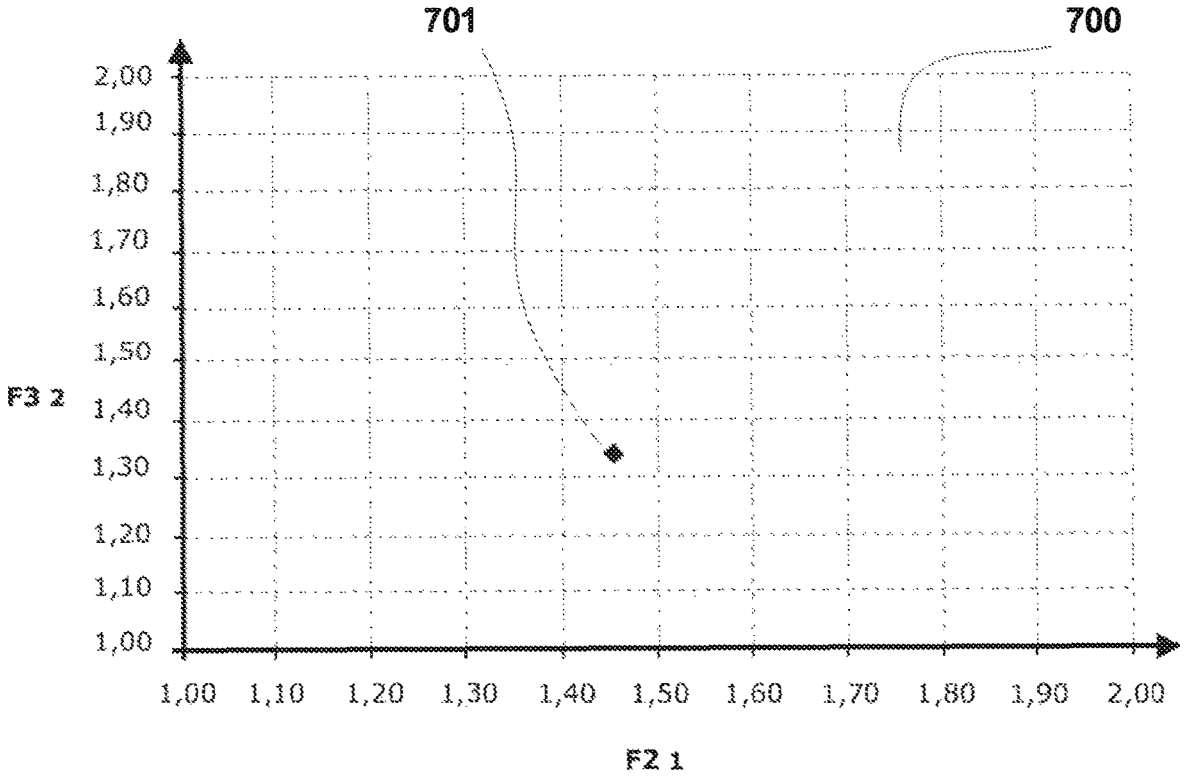
701
700
2,00
1,90
1,80
1,70
1,60
1,50
F3 2
1,40
1,30
1,20
1,10
1,00
1,00 1,10 1,20 1,30 1,40 1,50 1,60 1,70 1,80 1,90 2,00
F2 1

FIG. 7

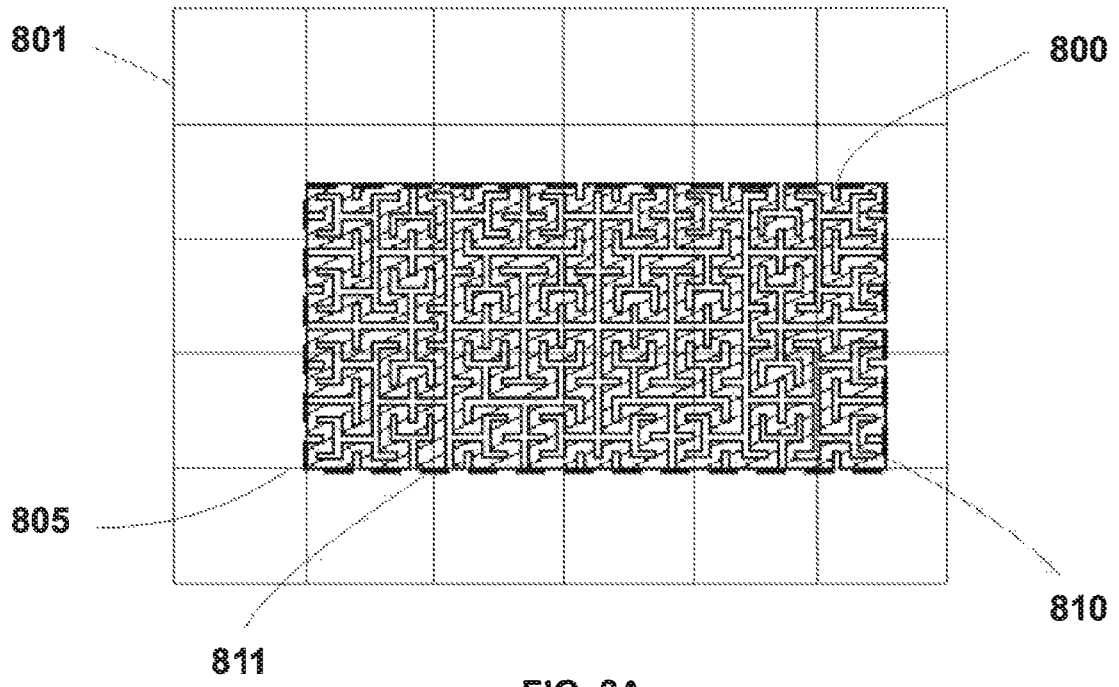

FIG. 8A

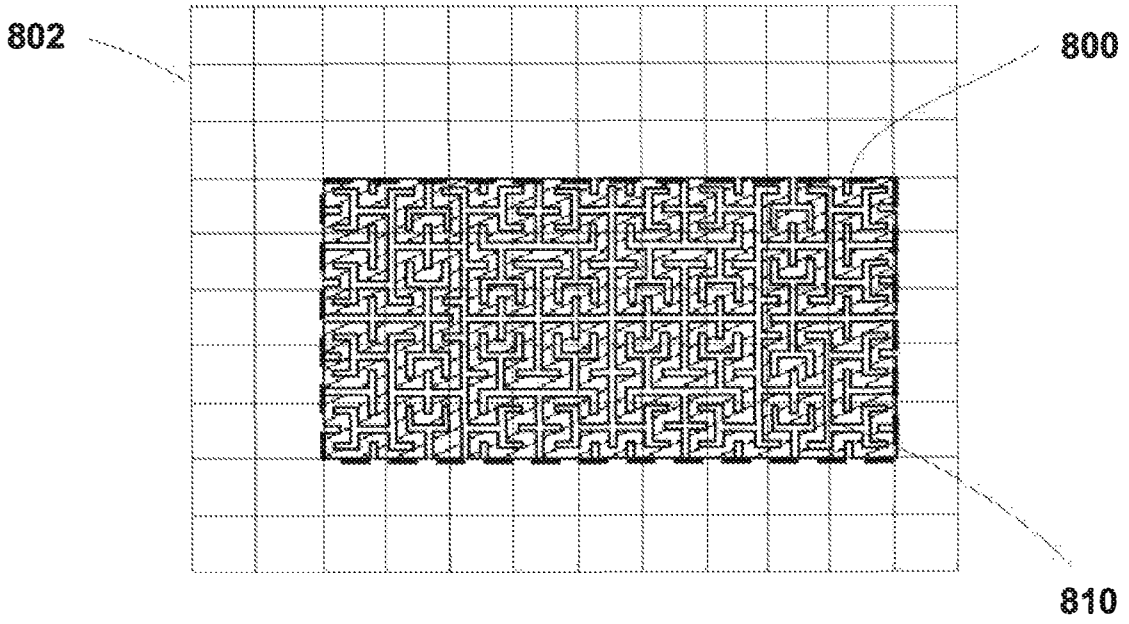

FIG. 8B

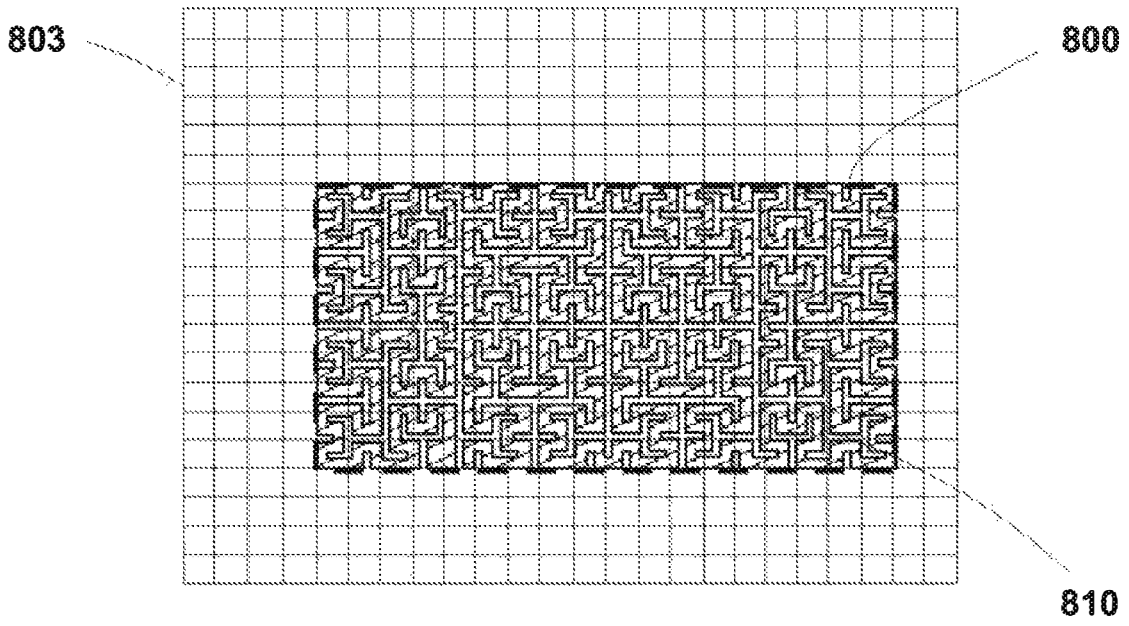

FIG. 8C

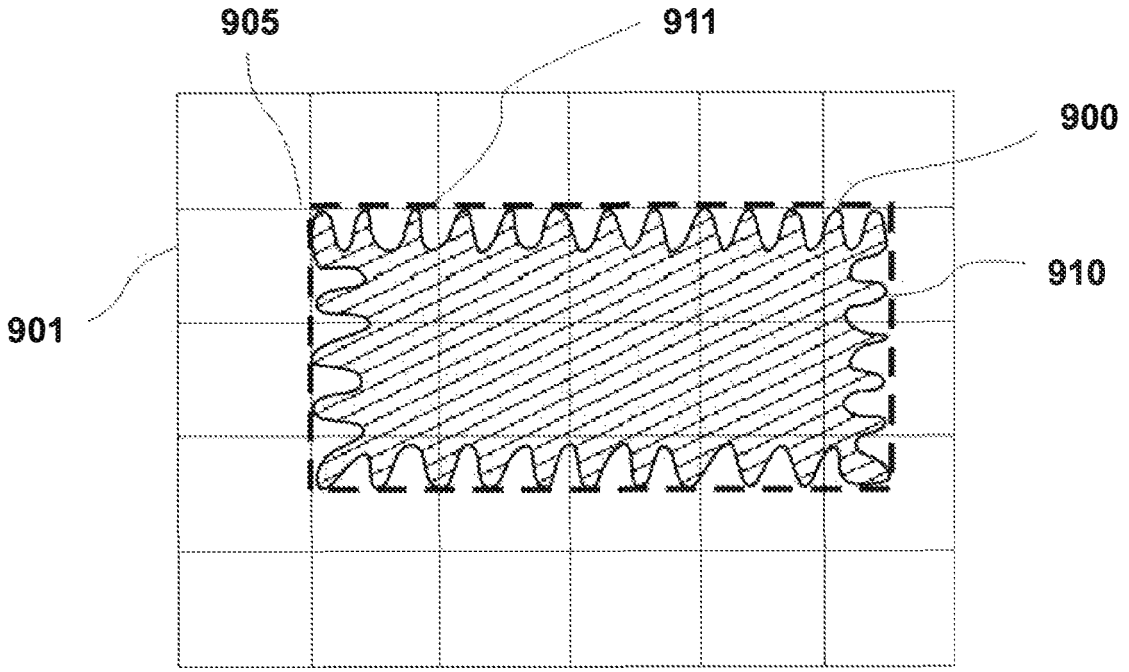

FIG. 9A

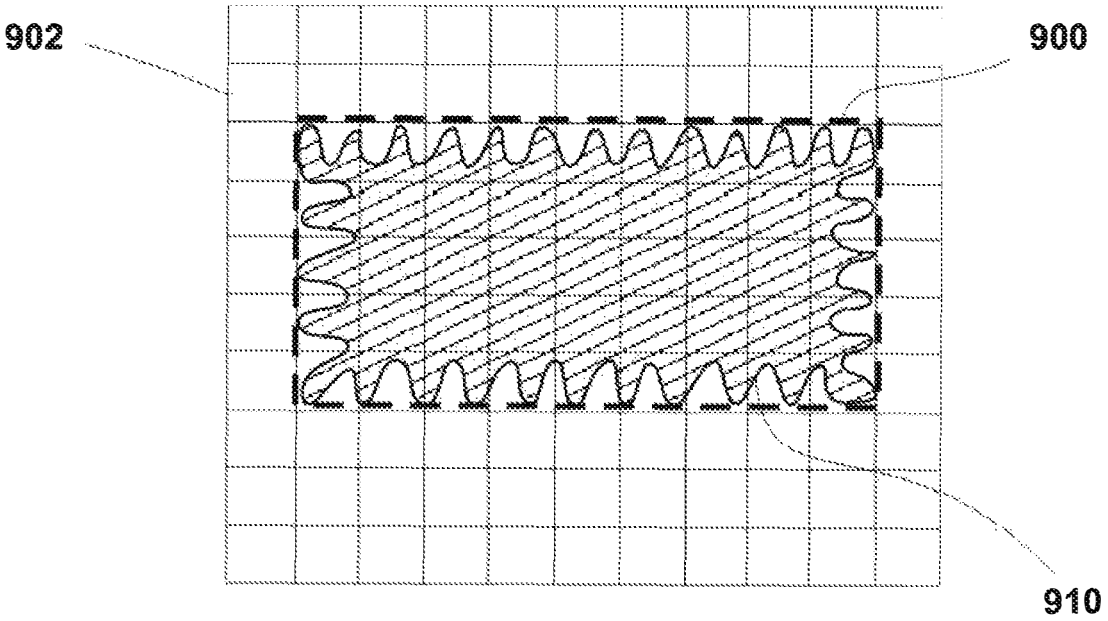

FIG. 9B

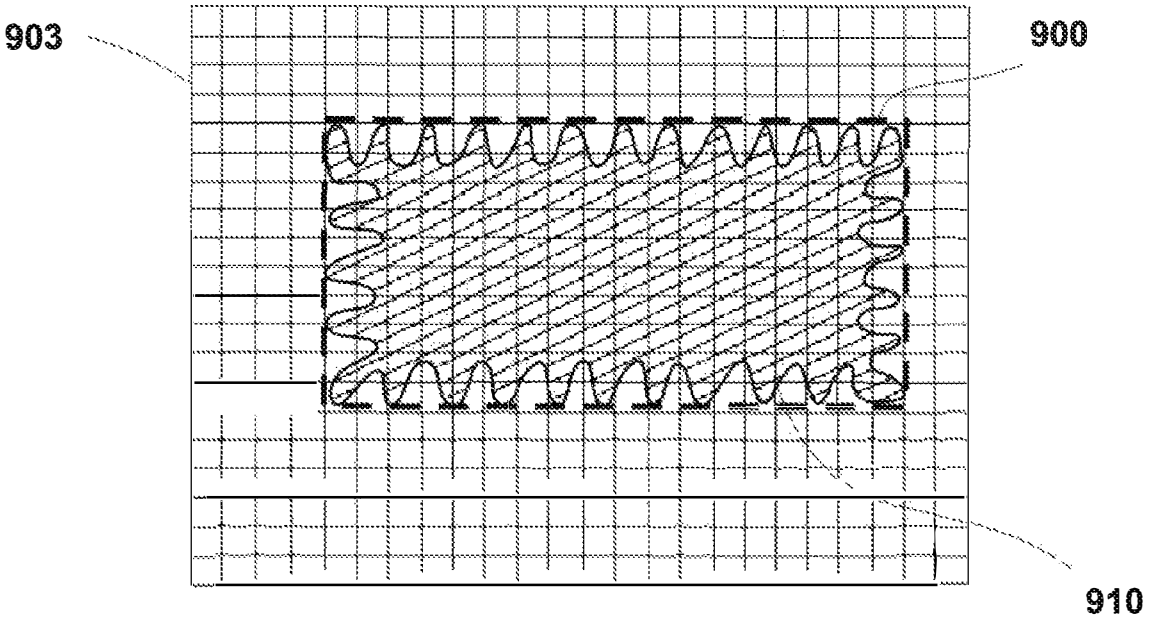

FIG. 9C

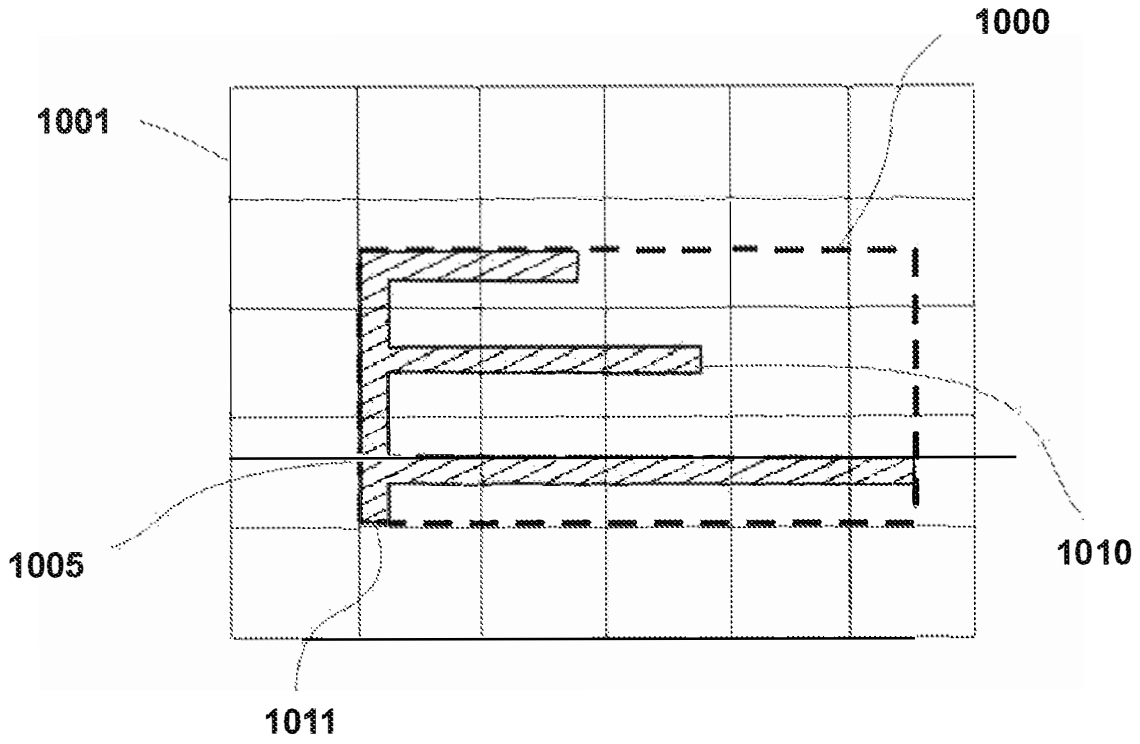

FIG. 10A

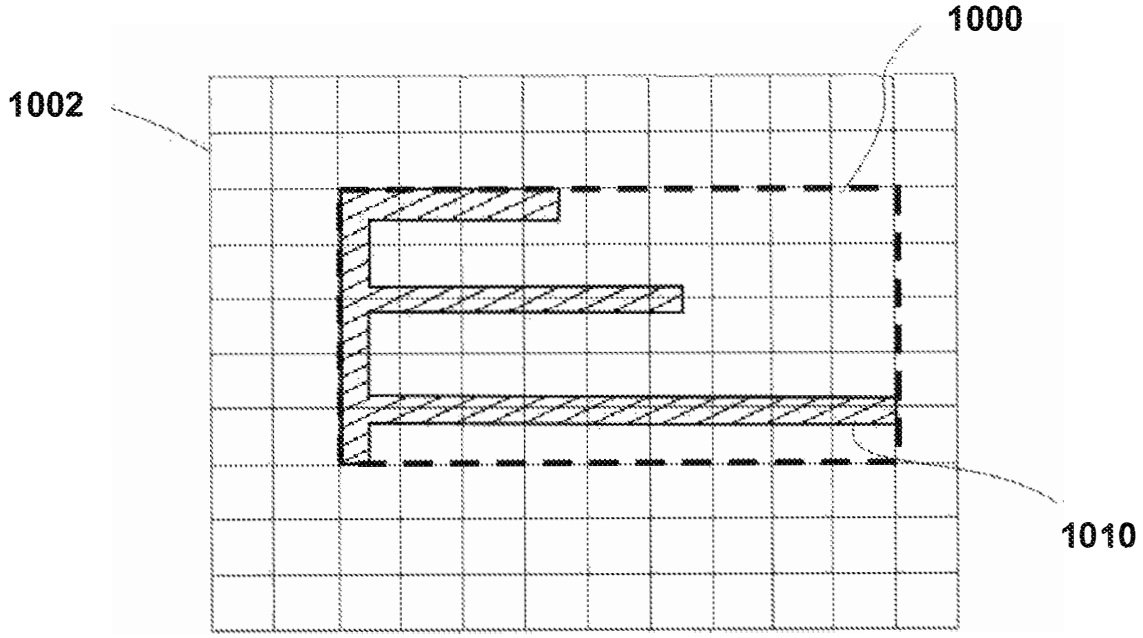

FIG. 10B

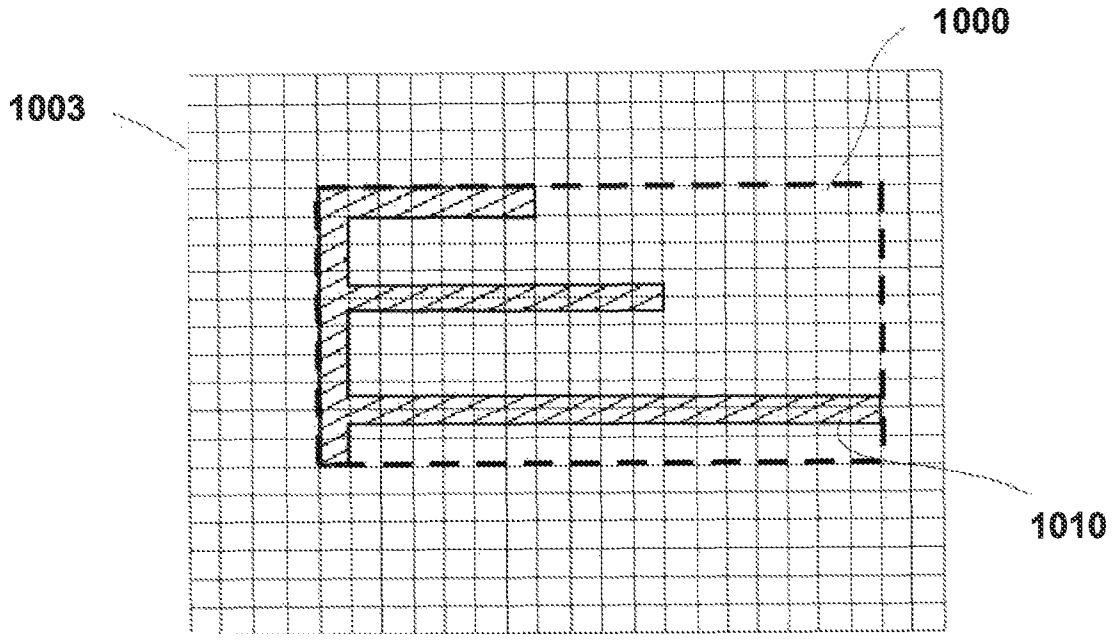

FIG. 10C

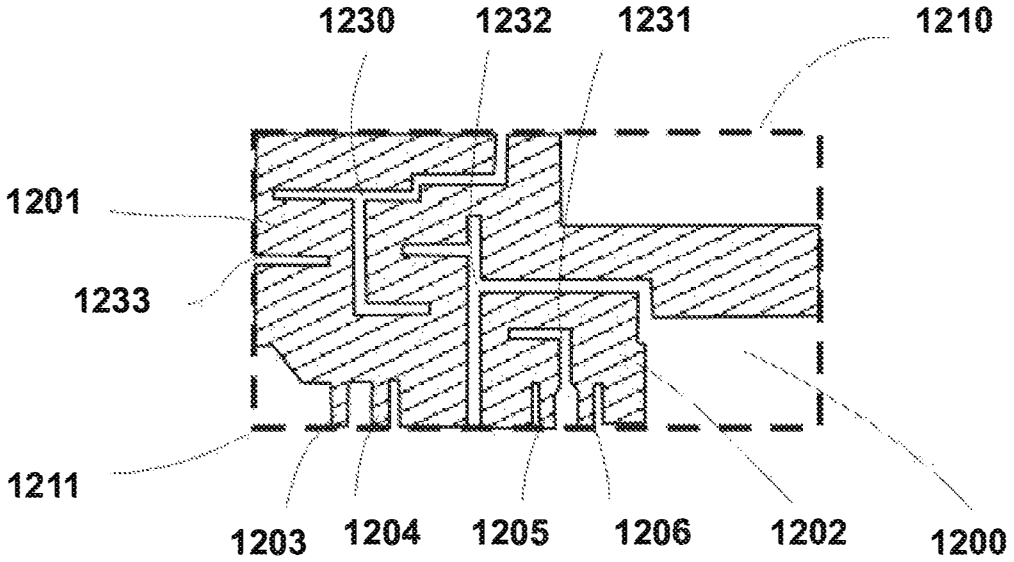

FIG. 12A

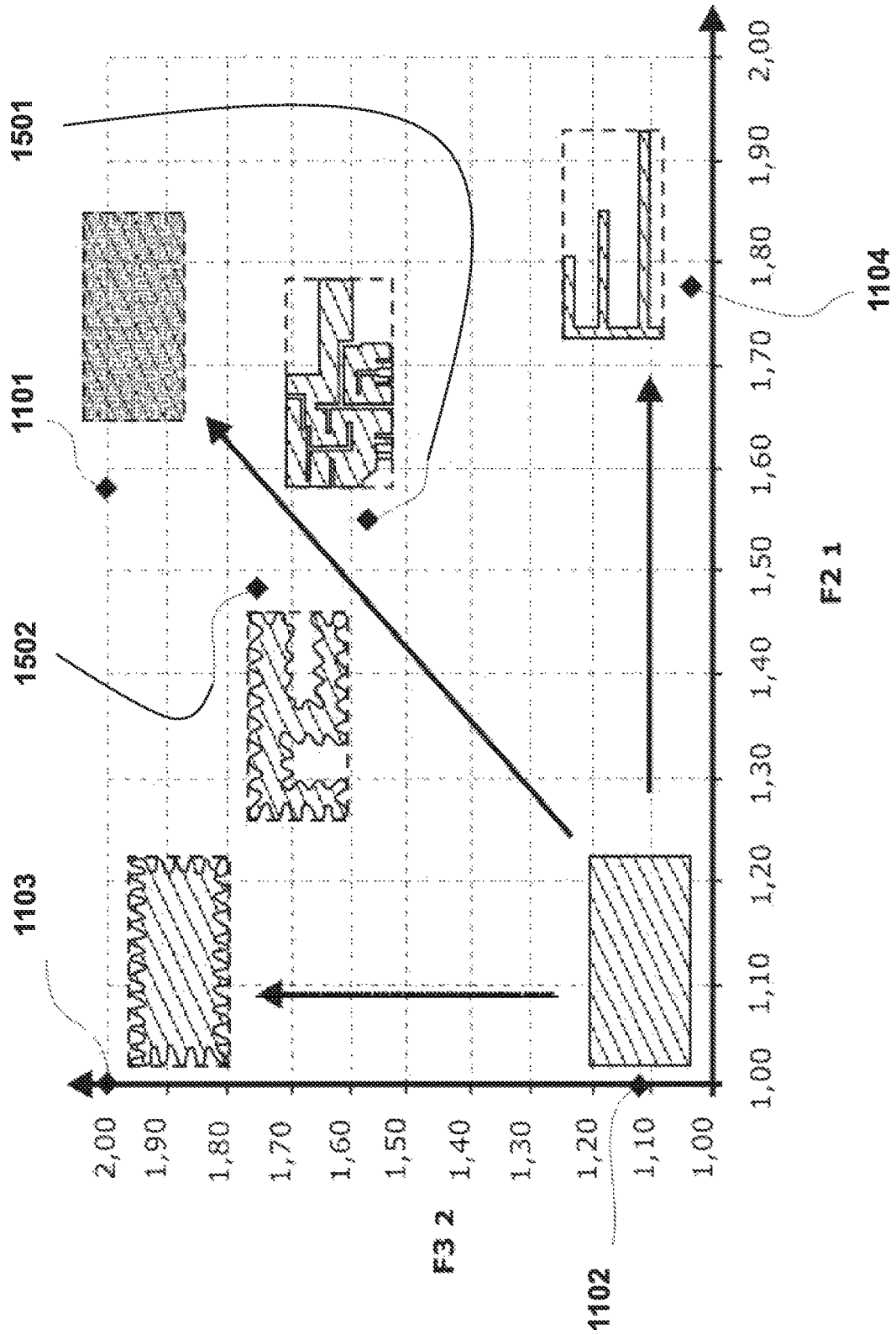
1501
1101
1502
1103
1102
1104
F3 2
F2 1
2,00
1,90
1,80
1,70
1,60
1,50
1,40
1,30
1,20
1,10
1,00

FIG. 11

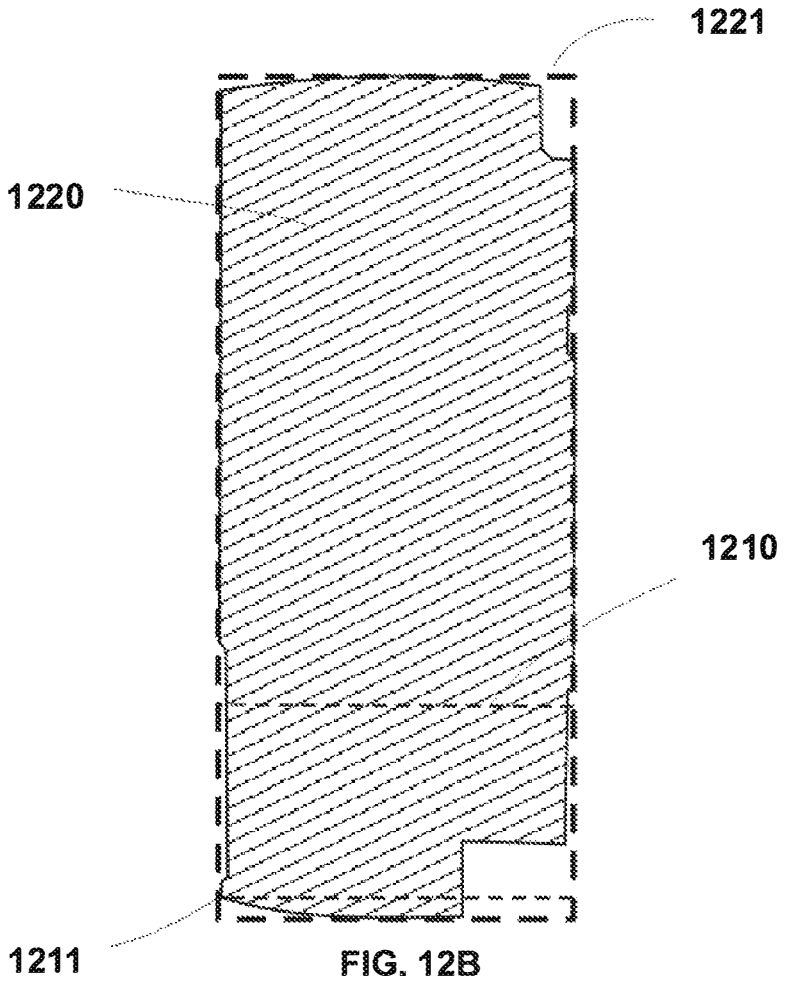

FIG. 12B

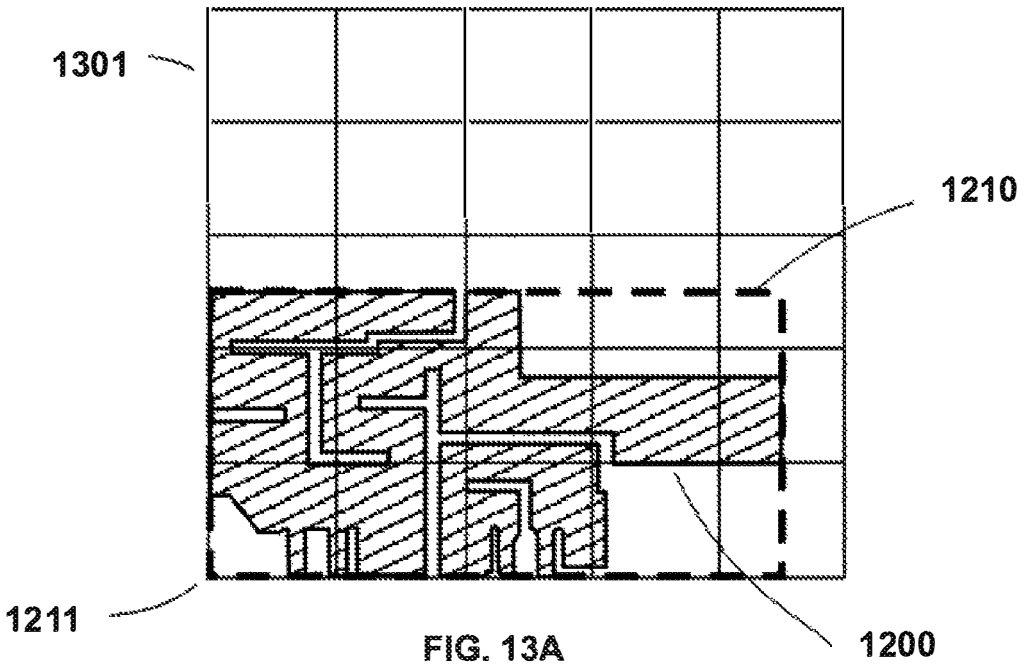

FIG. 13A

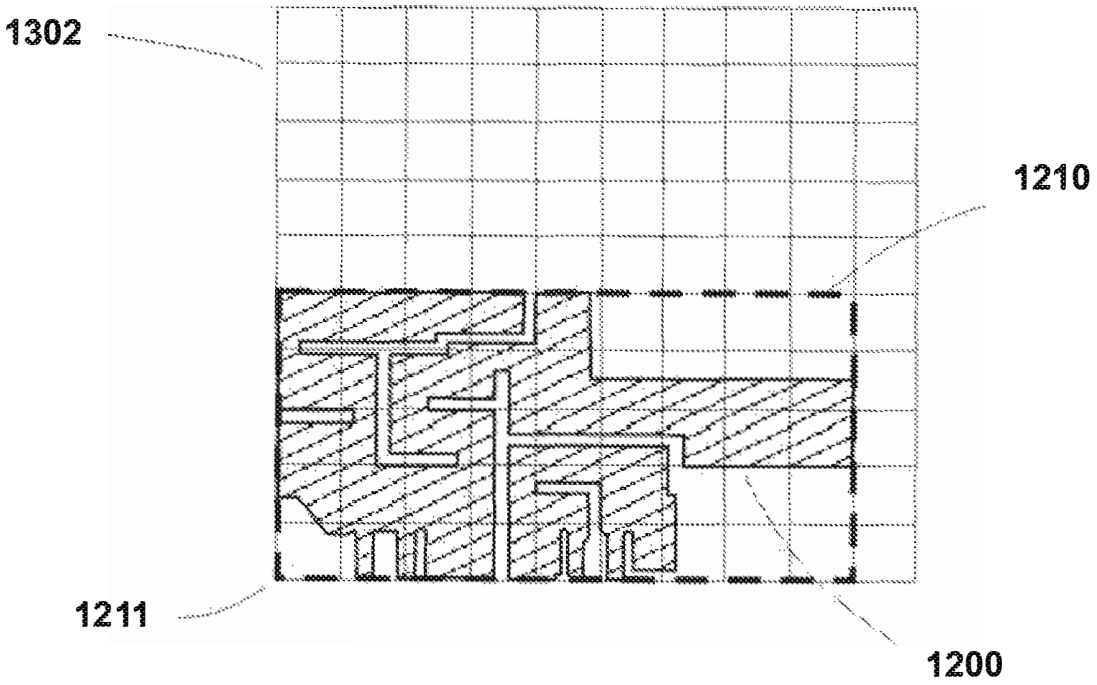

FIG. 13B

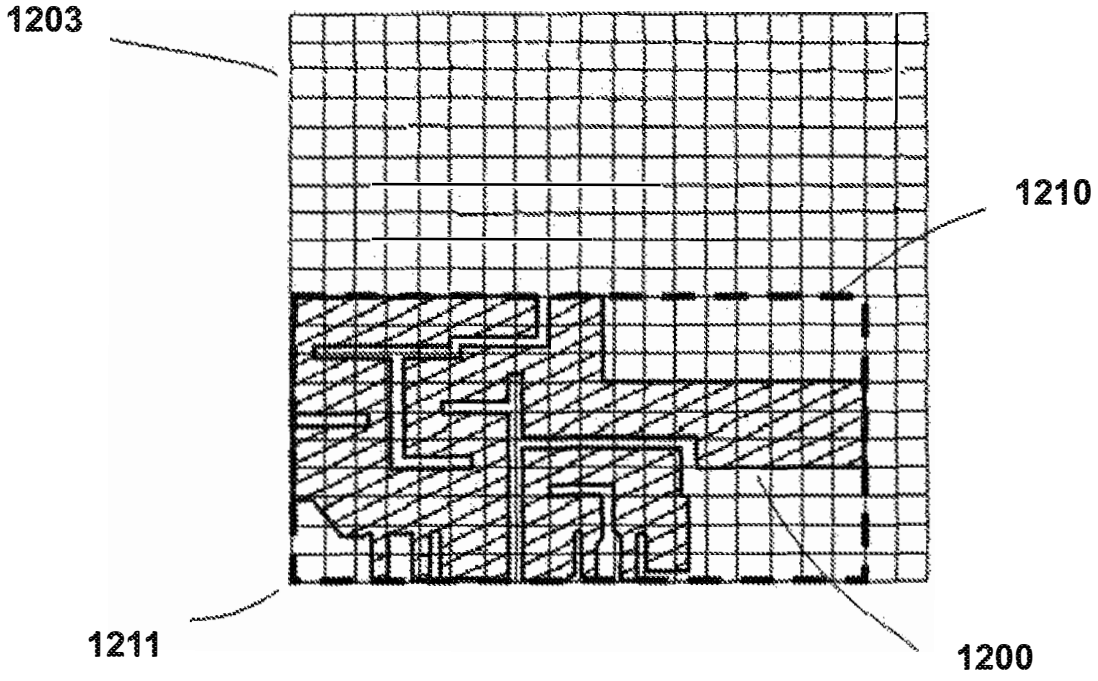

FIG. 13C

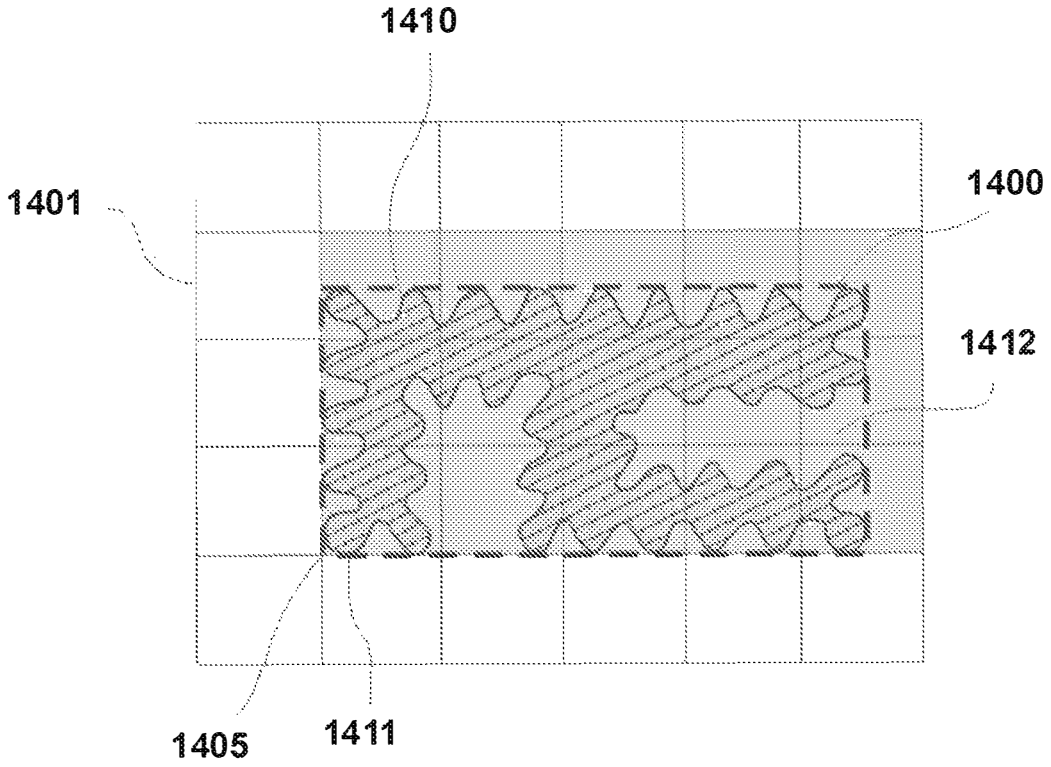

FIG. 14A

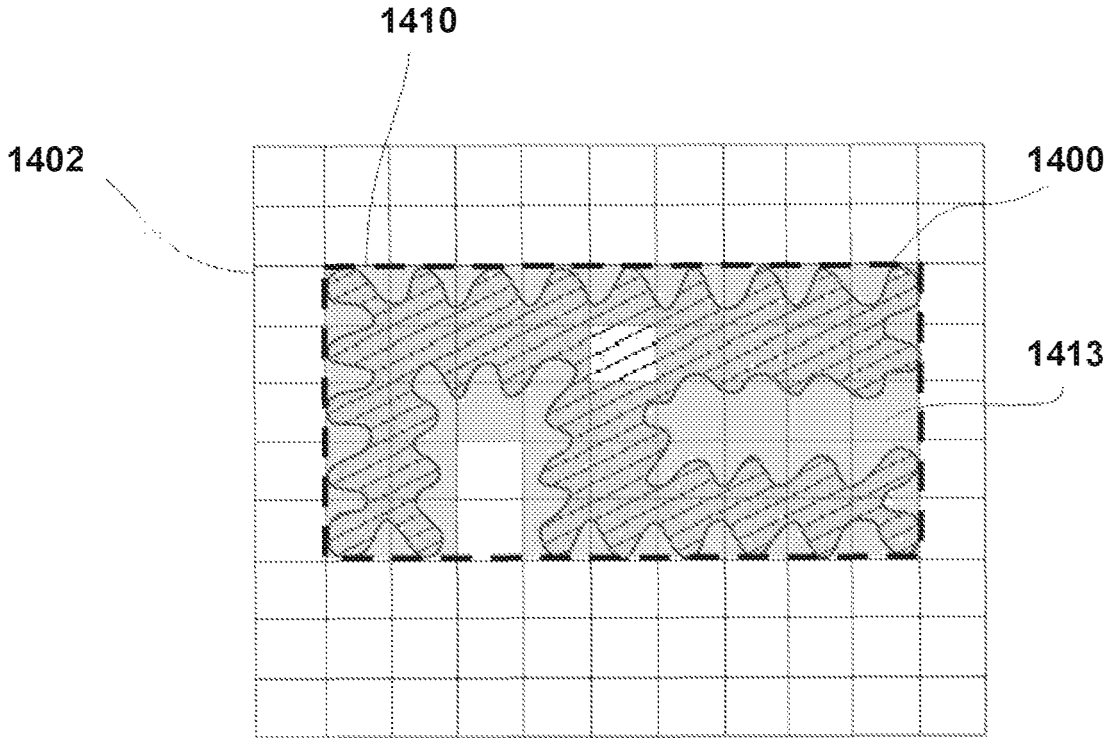

FIG. 14B

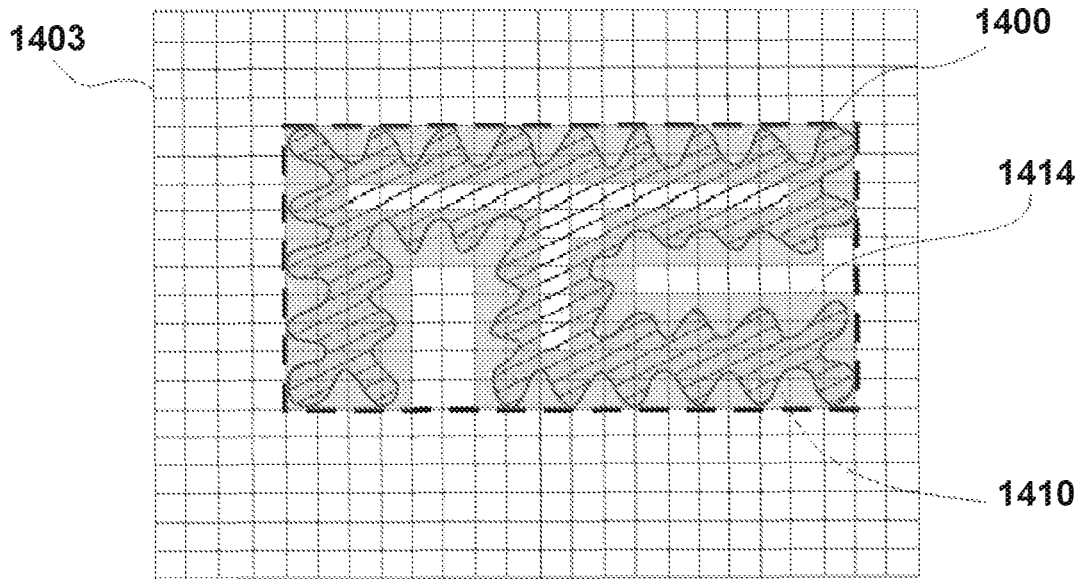

FIG. 14C

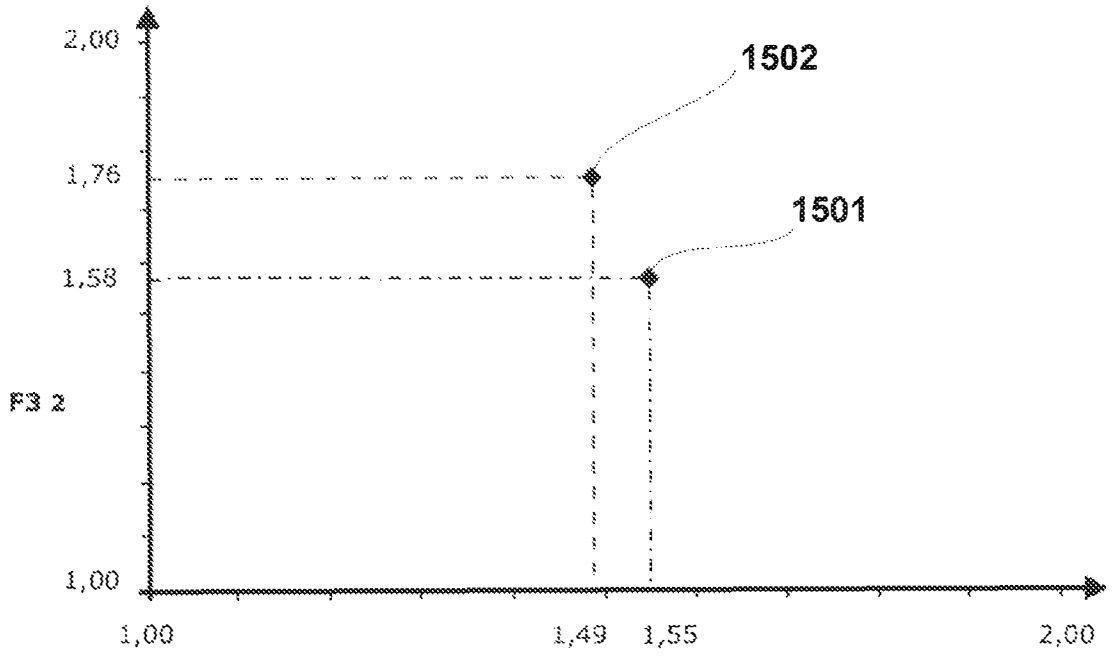

FIG. 15

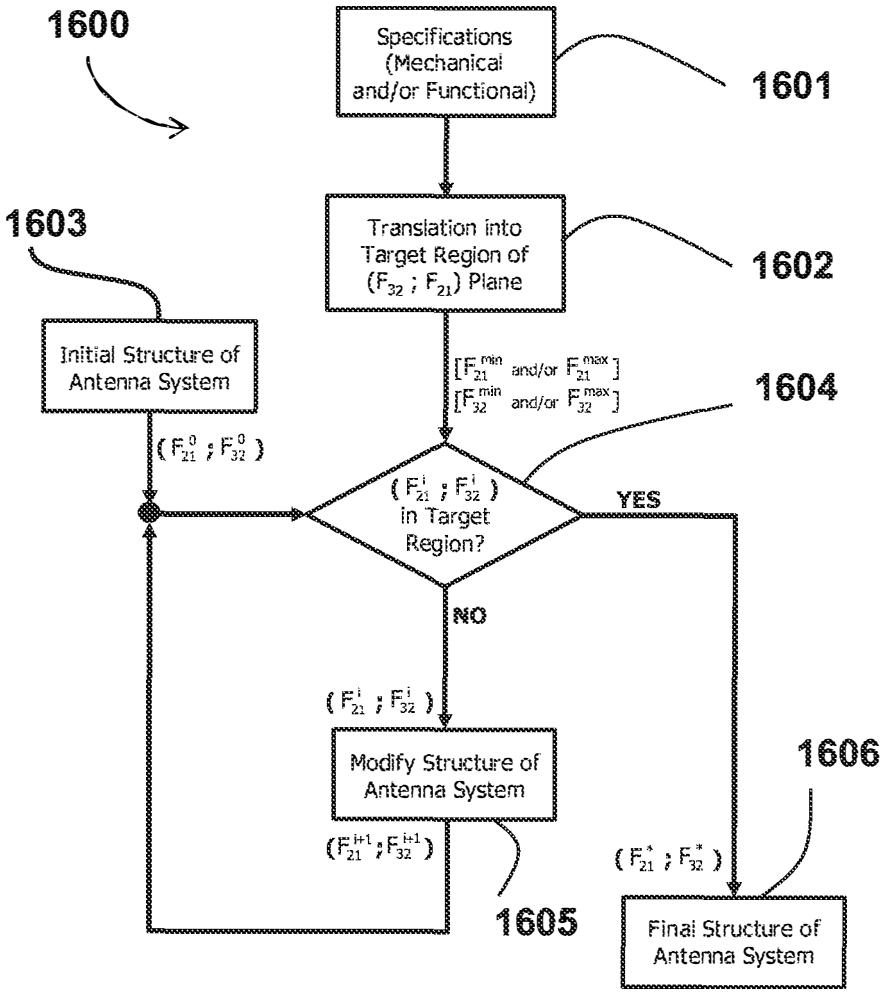
1600
Specifications (Mechanical and/or Functional)
1601
Translation into Target Region of (F_{32} ; F_{21}) Plane
1602
1603
Initial Structure of Antenna System
[F_{21}^{min} and/or F_{21}^{max}]
[F_{32}^{min} and/or F_{32}^{max}]
1604
(F_{21}^{0} ; F_{32}^{0})
(F_{21}^{i} ; F_{32}^{i}) in Target Region?
YES
NO
(F_{21}^{i} ; F_{32}^{i})
Modify Structure of Antenna System
1606
(F_{21}^{i+1} ; F_{32}^{i+1})
(F_{21}^{*} ; F_{32}^{*})
1605
Final Structure of Antenna System

FIG. 16

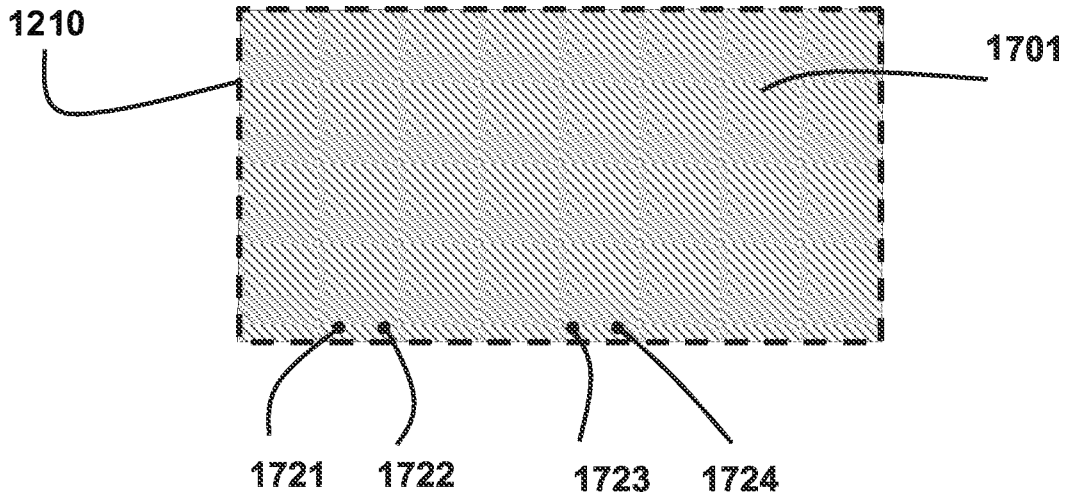

FIG. 17A

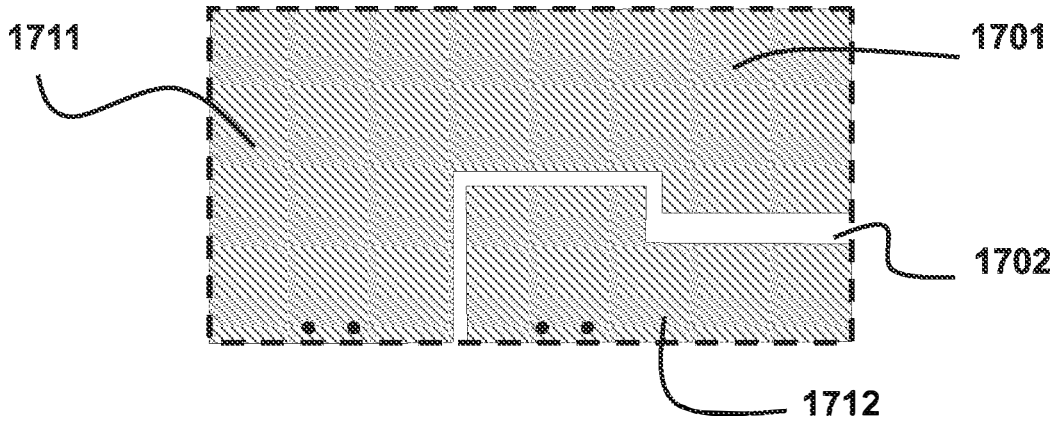

FIG. 17B

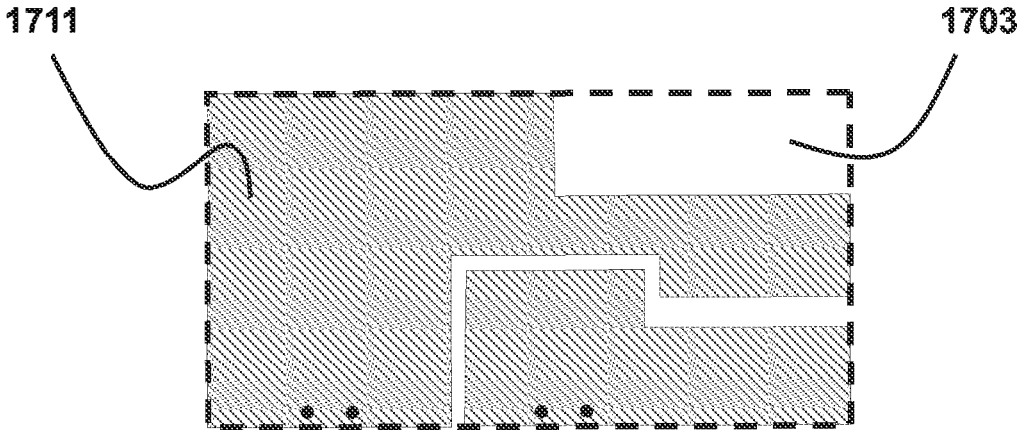

FIG. 17C

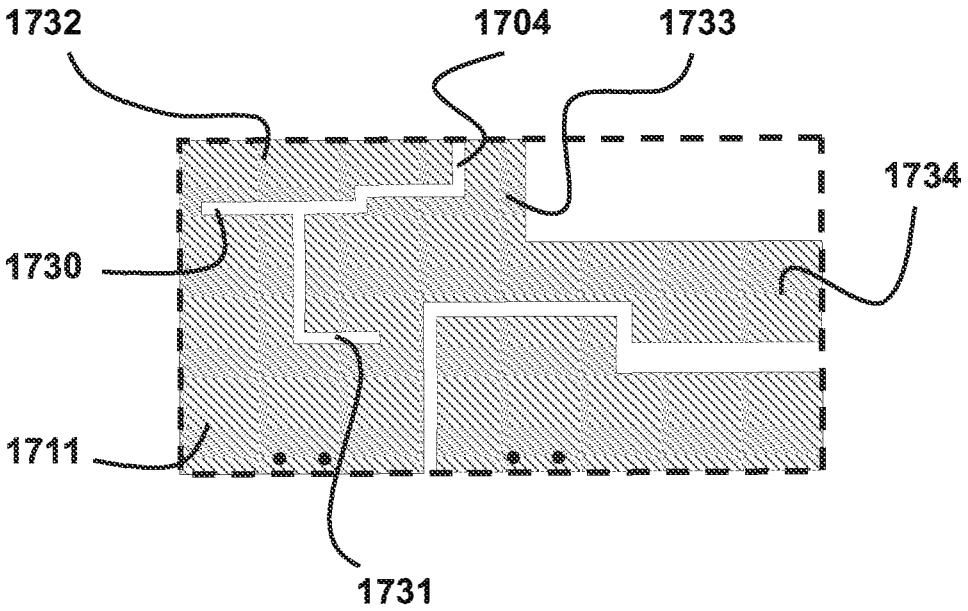

FIG. 17D

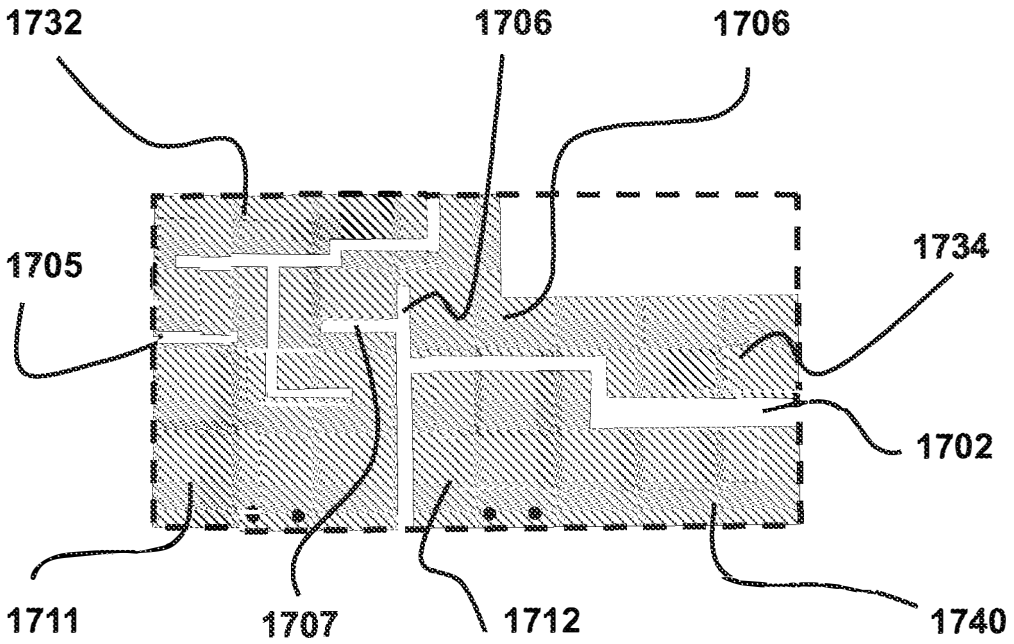

FIG. 17E

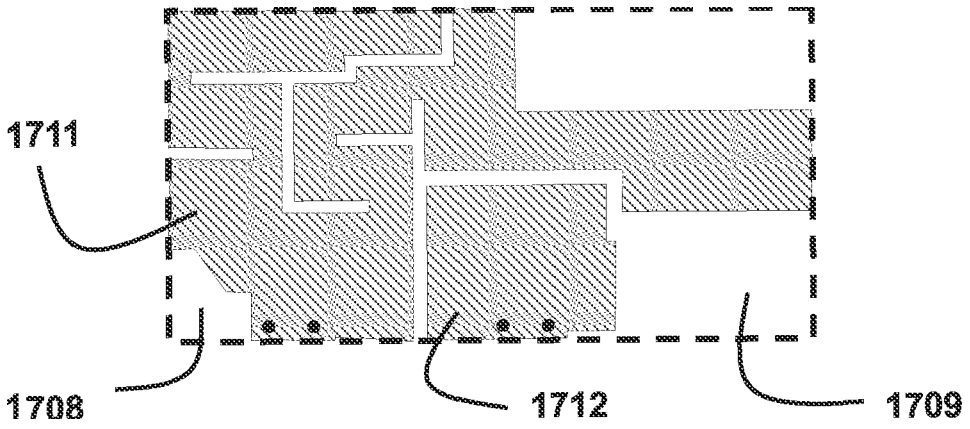

FIG. 17F

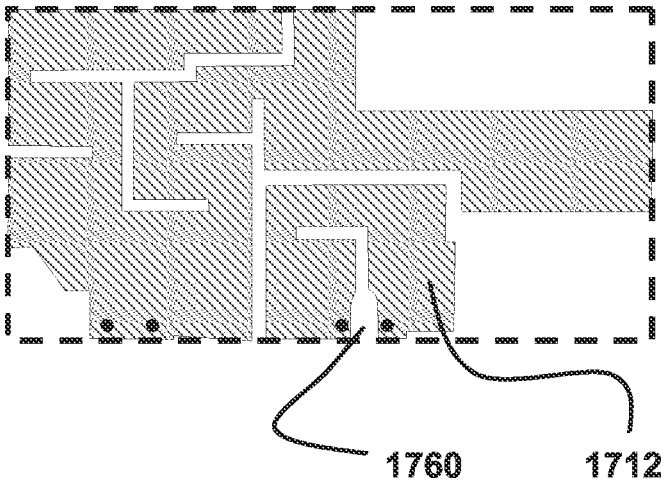

FIG. 17G

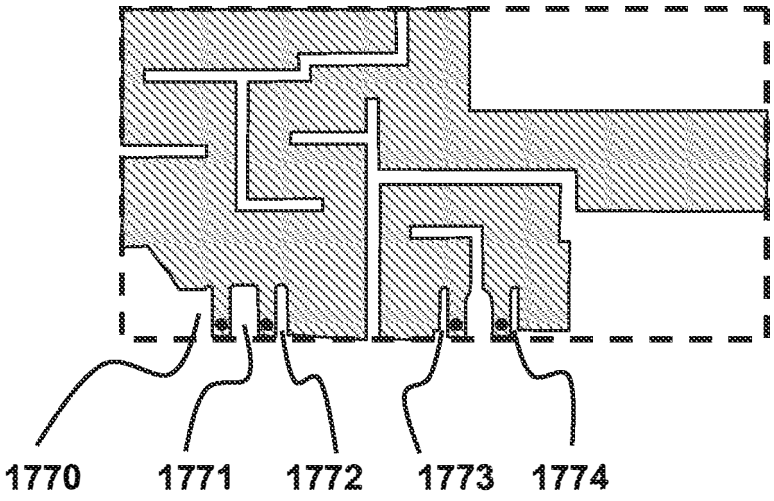

FIG. 17H

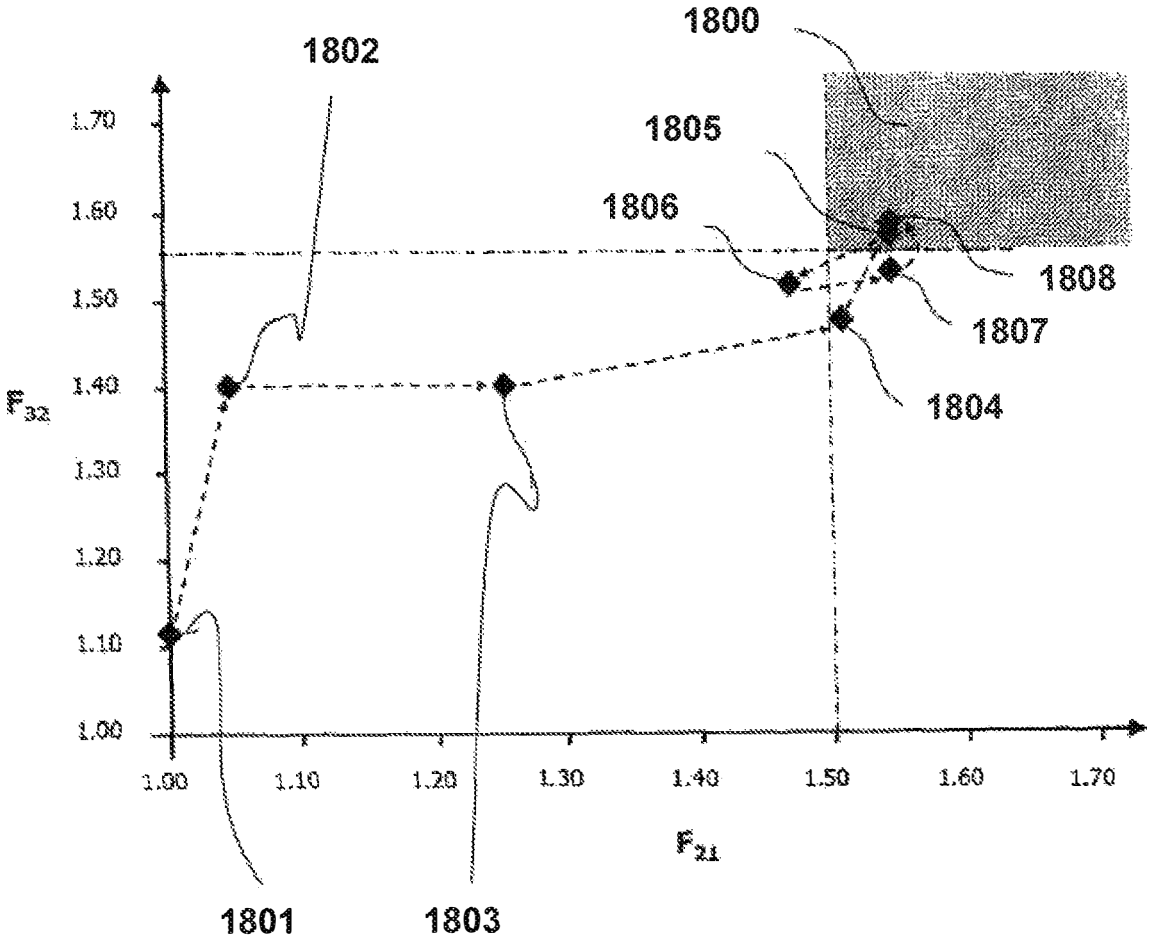
1800
1802
1805
1806
1808
1807
1804
1801
1803
1.70
1.60
1.50
1.40
1.30
1.20
1.10
1.00
F_{32}
1.00
1.10
1.20
1.30
1.40
1.50
1.60
1.70
F_{21}

FIG. 18

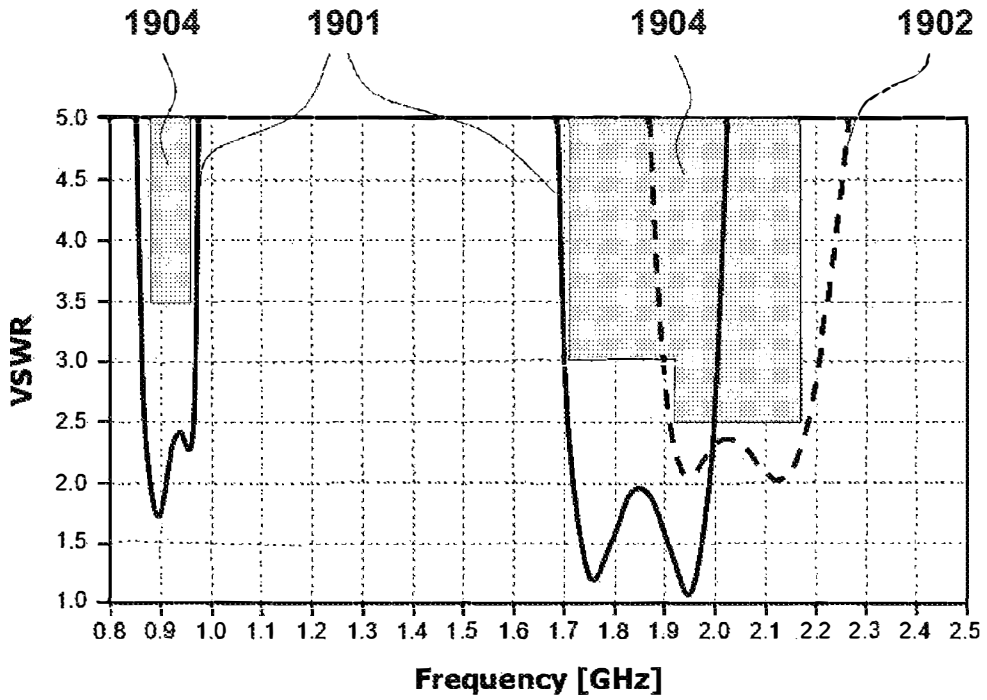

FIG. 19A

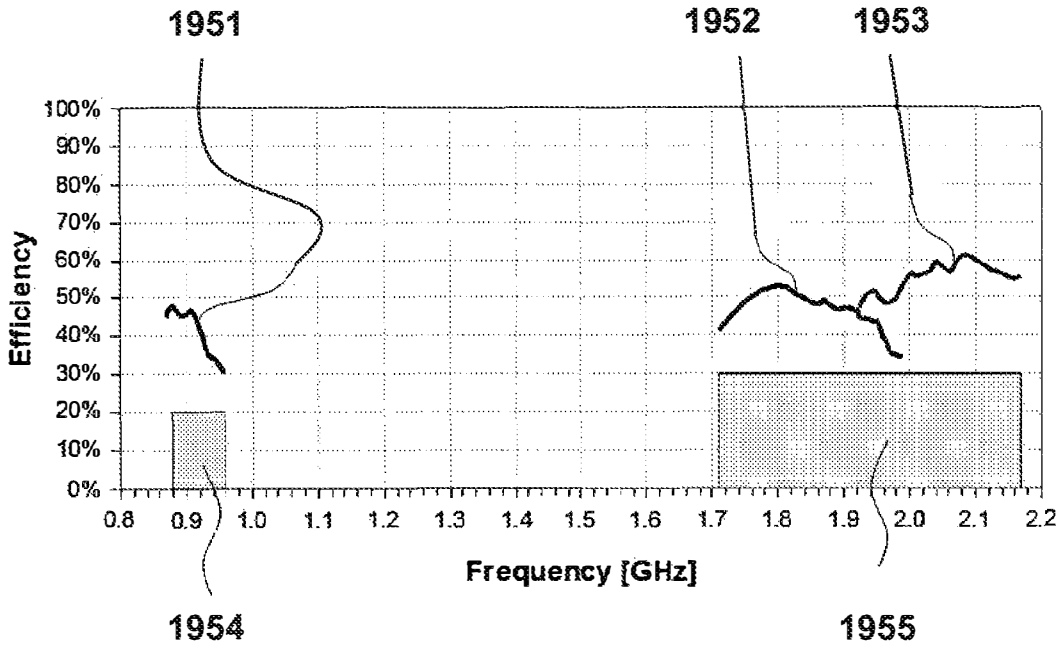

FIG. 19B

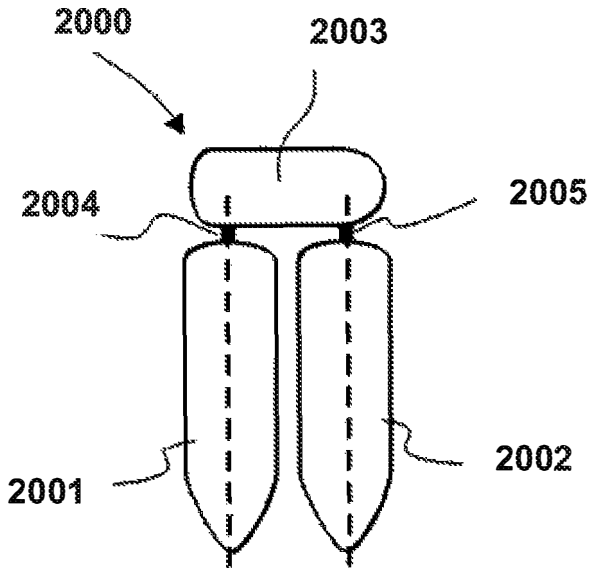

FIG. 20A

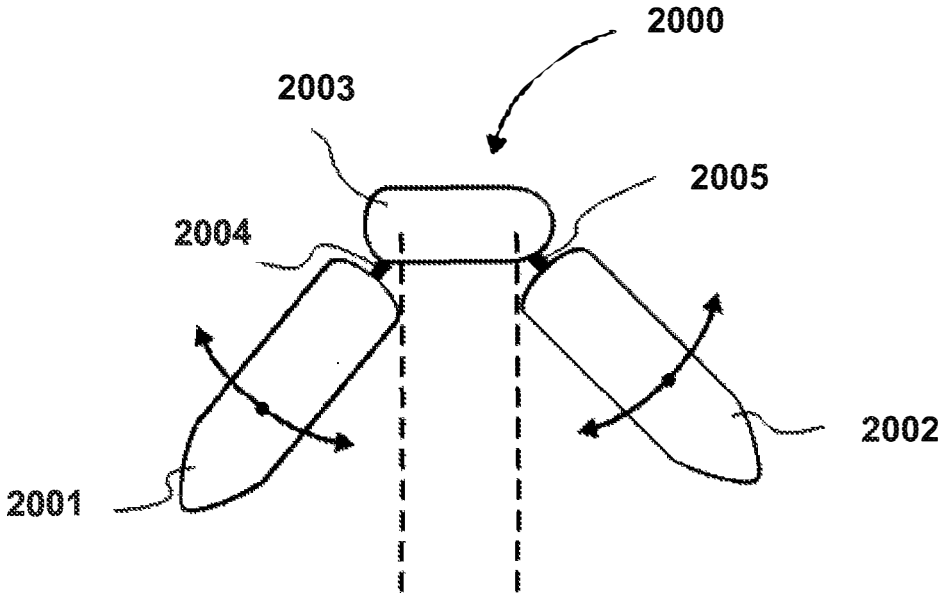

FIG. 20B

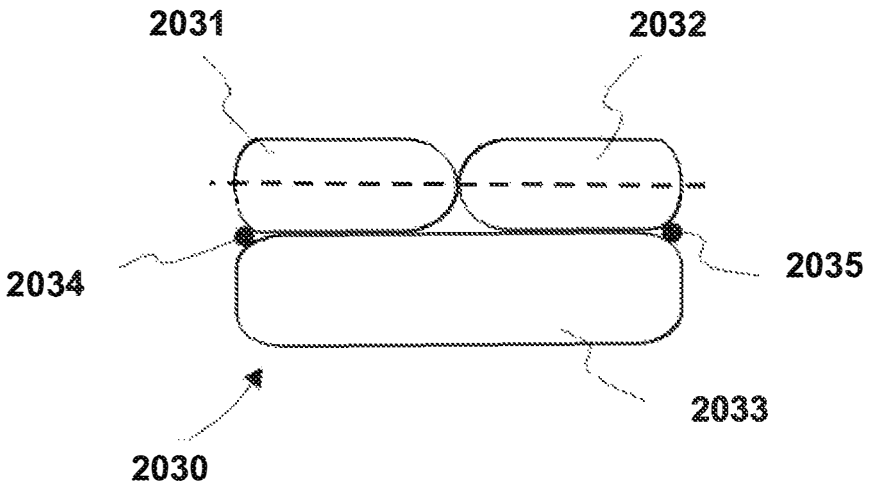

FIG. 20C

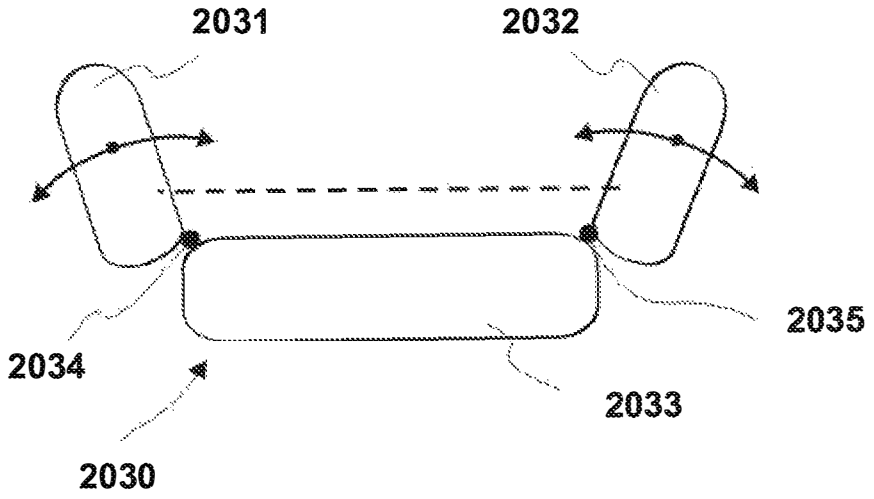

FIG. 20D

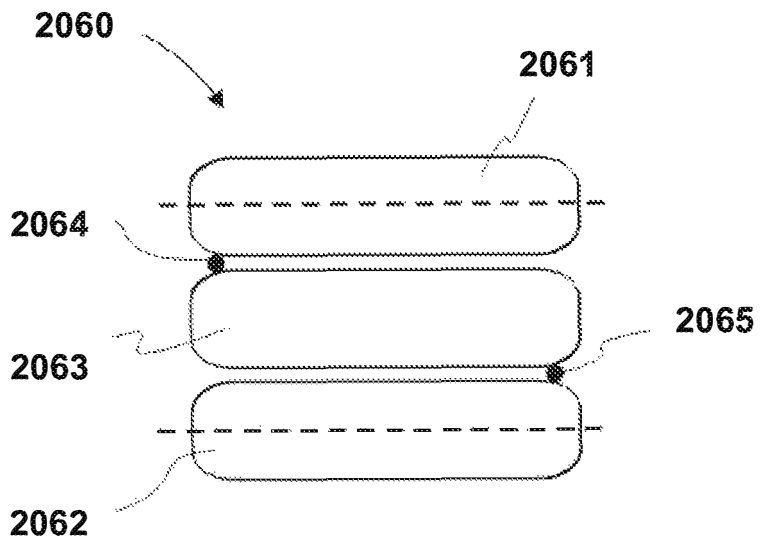

FIG. 20E

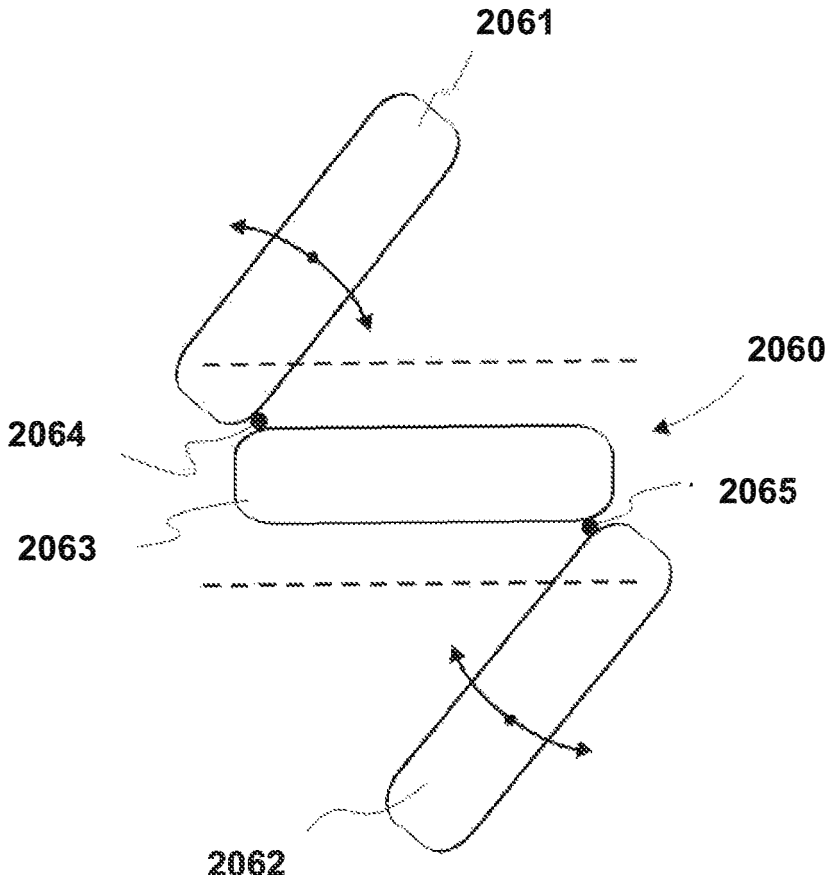

FIG. 20F

MULTIPLE-BODY-CONFIGURATION MULTIMEDIA AND SMARTPHONE MULTIFUNCTION WIRELESS DEVICES

CROSS-REFERENCE TO RELATED APPLICATIONS

This application is a continuation of U.S. patent application Ser. No. 17/704,942 filed Mar. 25, 2022, which is a continuation of U.S. patent application Ser. No. 17/246,192 filed Apr. 30, 2021, which is now U.S. Pat. No. 11,349,200, issued May 31, 2022, which is a continuation of U.S. patent application Ser. No. 16/832,820 filed Mar. 27, 2020, which is now U.S. Pat. No. 11,031,677, issued Jun. 8, 2021, which is a continuation of U.S. patent application Ser. No. 15/856,626 filed Dec. 28, 2017, which is now U.S. Pat. No. 10,644,380, issued May 5, 2020, which is a continuation of U.S. patent application Ser. No. 14/738,090 filed Jun. 12, 2015, which is now U.S. Pat. No. 9,899,727, issued on Feb. 20, 2018, which is a continuation of U.S. patent application Ser. No. 14/246,491 filed Apr. 7, 2014, which is now U.S. Pat. No. 9,099,773, issued on Aug. 4, 2015, which is a continuation of U.S. patent application Ser. No. 11/614,429 filed Dec. 21, 2006, which is now U.S. Pat. No. 8,738,103, issued on May 27, 2014, which claims the benefit of U.S. Provisional Application No. 60/856,410, filed on Nov. 3, 2006, and claims the benefit of U.S. Provisional Application No. 60/831,544, filed on Jul. 18, 2006, the entire contents of which are hereby incorporated by reference. This patent application further claims priority from, and incorporates by reference the entire disclosure of European Patent Application No. EP 06117352.2, filed Jul. 18, 2006.

FIELD OF THE INVENTION

The present invention relates to a multifunction wireless device (MFWD), and, more particularly, but not by way of limitation, to a multifunction wireless device and antenna designs thereof combining into a single unit mobile data and voice services with at least one of multimedia capabilities (multimedia terminal (MMT) and personal computer capabilities, (i.e., smartphone) or with both MMT and smartphone (SMRT) capabilities (MMT+SMRT).

BACKGROUND

MFWDs are usually individually adapted to specific functions or needs of a certain type of users. In some cases, it may be desirable that the MFWD is either e.g. small while in other cases this is not of importance since e.g. a keyboard or screen is provided by the MFWD which already requires a certain size.

Many of the demands for modern MFWDs also translate to specific demands for the antennas thereof. For example, one design demand for antennas of multifunctional wireless devices is usually that the antenna be small in order to occupy as little space as possible within the MFWD which then allows for smaller MFWDs or for more specific equipment to provide certain function of the MFWD. At the same time, it is sometimes required for the antenna to be flat since this allows for slim MFWDs or in particular, for MFWDs which have two parts that can be shifted or twisted against each other.

In the context of the present application, a device is considered to be slim if it has a thickness of less than about 14 mm, 13 mm, 12 mm, 11 mm, 10 mm, 9 mm or 8 mm. A

slim MFWD should be mechanically stable, mechanical stability being more difficult to achieve in slim devices.

Additionally, antennas in some embodiments are required to be multi-band antennas and to cover different frequency bands and/or different communication system bands. Beyond that, some of the bands have to be particularly broad like the UMTS band which has a bandwidth of 12.2%. For a good wireless connection, high gain and efficiency are further required. Other more common design demands for antennas are the voltage standing wave ratio (VSWR) and the impedance which is typically about 50 ohms.

Furthermore of particular importance, is omni-directional coverage which means that the antenna radiates with a substantially donut-shaped radiation pattern such that e.g. terrestrial base stations of mobile telephone communication systems can be contacted within any direction in the horizontal plane.

However, for satellite communication (for example, for receiving GPS signals), other radiation patterns are preferred, in particular, those which radiate into the upper hemisphere. Here radiation into the horizontal plane is usually less desired. The polarization of the emitted or received radiation also has to be taken into consideration. Other demands for antennas for modem MFWDs are low cost and a low specific absorption rate (SAR).

Furthermore, an antenna has to be integrated into a device such as MFWD such that an appropriate antenna may be integrated therein which puts constraints upon the mechanical fit, the electrical fit and the assembly fit of the antenna within the device. Of further importance, usually, is the robustness of the antenna which means that the antenna does not change antenna properties in response to smaller shocks to the device.

As can be imagined, a simultaneous improvement of all features described above is a major challenge for persons skilled in the art. A typical exemplary design problem is the generally uniform line of thinking that due to the limits of diffraction, a substantial increase in gain and directivity can only be achieved through an increase in the antenna size.

On the other hand, a MFWD that has a high directivity and hence, a high gain, has to be properly oriented towards a transceiver-base station. This, however, is not always practical since portable device users need to have the freedom to move and change direction with respect to a base station without losing coverage and, therefore, losing the wireless connection. Therefore, less gain is usually accepted in order to obtain an omni-directional (donut-like) radiation pattern.

It has to be taken into account that a palmtop, laptop, or desktop portable device might require a radiation pattern that enhances radiation in the upper hemisphere, i.e., pointing to the ceiling and the walls rather than pointing to the floor, since transceiver stations such as a hotspot antenna or a base station are typically located above or on the side of the portable device. If, however, such a device is used for a voice phone call it will be held substantially upright close to the user's head in which case an omni-directional pattern is preferred which is oriented so that the donut-like shape of the radiation pattern lies in the horizontal.

While it might appear desirable to provide an antenna with a uniform radiation pattern (sphere-like) for voice calls such a pattern turns out to have substantial drawbacks in terms of a desired low specific absorption rate since it sometimes leads to an increased absorption of radiation within the hand and the head of the user during a voice phone call.

In every MFWD, the choice of the antenna, its placement in the device and its interaction with the surrounding elements of the device will have an impact on the overall wireless connection performance making its selection non-trivial and subject to constraints due to particular target use, user and market segments for every device.

As established by L. J. Chu in "Physical Limitations of Omni-Directional Antennas", Journal of Applied Physics, Vol. 19, December, 1948, pg. 1163-1175, and Harold A. Wheeler, in "Fundamental Limitations of Small Antennas", Proceedings of the I.R.E., 1947, pgs. 14 79-1488. small antennas may not exceed a certain bandwidth. The bandwidth of the antenna decreases in proportion to the volume of the antenna. The bandwidth, however, is proportional to the maximum data rate the wireless connection can achieve and, therefore, a reduction in the antenna size is additionally linked to a reduction in the speed of data transmission.

Furthermore, a reduction of the antenna size can be achieved, for example, by loading the antenna with high dielectric materials for instance by stuffing, backing, coating, filling, printing or over-molding a conductive antenna element with a high dielectric material. Such materials tend to concentrate a high dielectric and magnetic field intensity into a smaller volume. This concentration leads to a high quality factor which, however, leads to a smaller bandwidth. Further, such a high concentration of electromagnetic field in the material leads to inherent electrical losses. Those losses may be compensated by a higher energy input into the antenna which then leads to a portable wireless device with a reduced standby or talk/connectivity time. In the design of MFWDs, every micro Joule of energy available in the battery has to be used in the most efficient way.

Multi-band antennas require a certain space since for each band a resonating physical structure is usually required. Such additional resonating physical structures occupy additional space which then increases the size of the antenna. It is therefore particularly difficult to build antennas which are both small and multi-band at the same time.

As already mentioned above, there exists a fundamental limit established by Chu and Wheeler between the bandwidth and antenna size. Therefore, many small antennas have great difficulty in achieving a desired large bandwidth.

Broadband operation may be achieved by two closely neighboring bands which then require additional space for the resonating physical structure of each of the bands. Further, those two antenna portions may not be provided too close together since, due to electric coupling between the two elements, the merging of the two bands into a single band is not achieved, but rather splitting the resonant spectrum into independent sub-bands which is not acceptable for meeting the requirements of wireless communication standards.

Furthermore, for broadband operation the resonating physical structure needs a certain width. This width, however, requires additional space which further shows that small broadband antennas are difficult to achieve.

It is known to achieve a broadband operation with parasitic elements which, however, require additional space. Such parasitic elements may also not be placed too close to other antenna portions since this will also lead to splitting the resonant spectrum into multiple sub-bands.

An antenna type which may be particularly suitable for slim multifunctional devices or those composed of two parts which can be moved against each other (such as twist, clamshell or slide devices) is a patch antenna (and particularly a PIF A antenna). However patch antennas, are unfortunately known to have poor gain and narrow bandwidths, typically in the range of 1% to 5% which is unsuitable for coverage of certain bands such as the UMTS band.

Although it is known that the bandwidth may be increased by changing the separation between the patch and its ground plane, this then destroys the advantage of patch antennas being flat. This also leads to a distortion of the radiating pattern, for instance, due to surface wave effects.

For patch antennas it is known that by providing a high dielectric material between the patch and the ground plane, it is possible to reduce the antenna size. As mentioned above, such high dielectric materials tend to reduce the bandwidth which is then disadvantageous for patch antennas. Such materials also generally increase losses.

Further difficulties in antenna design occur when trying to build multi-band antennas. While it is possible to separate different antenna portions from each other with appropriate slots or the like, currents and charges in the respective parts always interact with one another by strong and far-reaching electromagnetic fields. Those different antenna branches are, therefore, never completely independent of one another. Trying to add a new branch to an existing antenna structure to produce a new antenna frequency of resonance therefore changes entirely the previous antenna frequencies. Therefore, it is difficult to simply take a working antenna and try to add one more band by just adding one more antenna portion. All previously achieved optimizations for already established frequency bands are lost by such an approach.

Trying to design an antenna with three or more bands gives rise to a linear or, in the worst case an exponential, rise in the number of parameters to consider or problems to resolve. For each band, resonant frequency, bandwidth, and other above-mentioned parameters such as impedance, polarization, gain, and directivity must all be controlled simultaneously. Furthermore, multi-band antennas may be coupled with two or more radio frequency devices. Such coupling raises the issue of isolation between the different radio frequency devices, which are both connected to the same antenna. Isolation of this type is a very difficult task.

Physical changes intended to optimize one parameter of one antenna band change other antenna parameters, most likely in a counter-productive way. It is usually not obvious how to control the counter-productive effects or how to compensate for them without creating still more problems.

Mechanical considerations must also be taken into account in antenna design. For example, the antenna needs to be firmly held in place within a device. However, the materials that are in very close proximity to the metal piece or the conductive portion which forms an antenna or antenna portion, have a great impact on the antenna characteristics. Sometimes extensions or small recesses in the metal piece are provided to firmly hold the antenna in place, however such means which are intended for giving mechanical robustness to the antenna also interact with and change the electric properties of the antenna.

All these different design problems of antennas may only be solved in the design of the geometry of the antenna. All parameters such as size, flatness, multi-band operation, broadband operation, gain, efficiency, impedance, radiation patterns, specific absorption rate, robustness and polarization are highly dependent on the geometry of the antenna. Nevertheless, it is practically impossible to identify at least one or two geometric features which affect only one or two of the above-mentioned antenna characteristics. Thus, there is no individual geometry feature which can be identified in order to optimize one or two antenna characteristics, without also influencing all other antenna characteristics.

Any change to the antenna geometry may harm more than it helps without knowing in advance how and why it happens or how it can be avoided.

Additionally, every platform of a wireless device is different in terms of form factor, market and technical requirements and functionality which requires different antennas for each device.

One problem is solved by providing the MFWD with an RF system and an antenna system with the capability of fully functioning in one, two, three or more communication standards (such as e.g. GSM 850, GSM 900, GSM 1800, GSM 1900, UMTS, CDMA, W-CDMA, etc.), and in particular mobile or cellular communication standards, each standard allocated in one or more frequency bands, each of said frequency bands being fully contained within one of the following regions of the electromagnetic spectrum:

the 810 MHz-960 MHz region,

the 1710 MHz-1990 MHz region,

and the 1900 MHz-2170 MHz region

such that the MFWD is able to operate in three, four, five, six or more of said bands contained in at least said three regions.

One problem to be solved by the present invention is therefore to provide an enhanced wireless connectivity. Another effect of the invention is to provide antenna design parameters that tend to optimize the efficiency of an antenna for a MFWD device while observing the constraints of small device size and enhanced performance characteristics.

SUMMARY

A multifunction wireless device having at least one of multimedia functionality and smartphone functionality, the multifunction wireless device including an upper body and a lower body, the upper body and the lower body being adapted to move relative to each other in at least one of a clamshell, a slide, and a twist manner. The multifunction wireless device further includes an antenna system disposed within at least one of the upper body and the lower body and having a shape with a level of complexity of an antenna contour defined by complexity factors F_{21} having a value of at least 1.05 and not greater than 1.80 and having a value of at least 1.10 and not greater than 1. 90.

A multifunction wireless device having at least one of multimedia and smartphone functionality, the multifunction wireless device including a microprocessor and operating system adapted to permit running of word-processing, spreadsheet, and slide software applications, and at least one memory interoperably coupled to the microprocessor, the at least one memory having a total capacity of at least 1 GB. The multifunction wireless device further includes an antenna system having a shape with a level of complexity of an antenna contour defined by complexity factor F_{21} having a value of at least 1.05 and not greater than 1.80 and by complexity factor F_{32} having a value of at least 1.10 and not greater than 1.90.

A multifunction wireless device having at least one of multimedia and smartphone functionality, the multifunction wireless device including a receiver of at least one of analog and digital sound signals, an image recording system comprising at least one of an image sensor having at least 2 Megapixels in size, a flash light, an optical zoom, and a digital zoom, and data storage means having a capacity of at least 1 GB. The multifunction wireless device further includes an antenna system having a shape with a level of complexity of an antenna contour defined by complexity factor F_{21} having a value of at least 1.05 and not greater than 1.80 and by complexity factor F_{32} having a value of at least 1.10 and not greater than 1.90.

The present invention is related to a portable multifunction wireless device (MFWD) and in particular to a handheld multifunction wireless device. In some embodiments, the MFWD will take the form of a handheld multimedia terminal (MMT) including wireless connectivity to mobile networks. In some embodiments, the MFWD will take the form of a handheld device combining personal computer capabilities, mobile data and voice services into a single unit (smartphone, SMRT), while in others the MFWD will combine both multimedia and smartphone capabilities (MMT+SMR T).

It is an object of the present invention to provide wireless connectivity to an MFWD that takes the form of a handheld multimedia terminal (MMT). In some embodiments, the MMT will include means to reproduce digital music and sound signals, preferably in a data compressed format such as for instance a MPEG standard such as MP3 (MPEG3) or MP4 (MPEG4). In some embodiments, the MMT will include a digital camera to record still (pictures, photos) and/or moving images (video), combined with a microphone or microphone system to record live sound and convert it to a digital compressed format. The present invention will be particularly suitable for those MMT embodiments combining both music and image capabilities, by providing means to efficiently integrate music, images, live video and sound recording and playing into a very small, compact and lightweight handheld device.

It is an object of the present invention as well, to provide wireless connectivity to an MFWD that takes the form of a smartphone (SMRT). In some embodiments, the smartphone will consist of a handheld electronic unit comprising a microprocessor and operating system (such as for instance but not limited to Pocket PC, Windows Mobile, Windows CE, Symbian, Palm OS, Brew, Linux) with the capability of downloading and installing multiple software applications and enhanced computing capabilities compared to a typical state of the art mobile phone. Typically, SMR T will comprise a small, compact (handheld) computer device with the capability of sharing, opening and editing typical word processing, spreadsheets and slide files that are handled by a personal computer (for instance a laptop or desktop). Although many current mobile phones feature some very basic electronic agenda functions (calendars, task lists and phonebooks) and are even able to install small Java or Brew games, they are not considered here to be smartphones (SMRT).

It is one purpose of the present invention to provide enhanced wireless capabilities to any of the MFWD devices described above. In some embodiments though, providing a wide geographical coverage will be a priority rather than enhanced multimedia or computing capabilities, while in others the priority will become to provide a high-speed connection and/or a seamless connection to multiple networks and standards.

BRIEF DESCRIPTION OF THE DRAWINGS

Further characteristics and advantages of the invention will become apparent in view of the detailed description which follows of some preferred embodiments of the invention given for purposes of illustration only and in no way meant as a definition of the limits of the invention, made with reference to the accompanying drawings:

FIG. **1A** shows a block diagram of a MFWD of the present invention illustrating the basic functional blocks thereof;

FIG. **1**B shows a perspective view of a MFWD including a space for the integration of an antenna system, and its corresponding antenna box and antenna rectangle;

FIG. **2**A shows an example MFWD comprising a ground plane layer included in a PCB, and its corresponding ground plane rectangle;

FIG. **2**B shows the ground plane rectangle of the MFWD of FIG. **2***a* in combination with an antenna rectangle for an antenna system;

FIG. **3** shows an example of an antenna contour of an antenna system for a MFWD;

FIG. **4** from top to down shows an example of a process (for instance a stamping process) followed to shape a rectangular conducting plate to create the structure of an antenna system for a MFWD;

FIGS. **5**A-B show an example of MFWD being held typically by a right-handed user to originate a phone call, and how the feeding point corner of the antenna rectangle of said MFWD may be selected;

FIG. **5**C shows an exploded view of an exemplary clam-shell-type MFWD;

FIG. **6**A shows an example of a first grid to compute the complexity factors of an antenna contour;

FIG. **6**B shows an example of a second grid to compute the complexity factors of an antenna contour;

FIG. **6**C shows an example of a third grid to compute the complexity factors of an antenna contour;

FIG. **7** shows the two-dimensional representation of the F_{32} vs. F_{21} space;

FIG. **8**A shows an example of an antenna contour inspired in a Hilbert curve under a first grid to compute the complexity factors of said antenna contour;

FIG. **8**B shows the example of the antenna contour of FIG. **8**A under a second grid to compute the complexity factors of said antenna contour;

FIG. **8**C shows the example of the antenna contour of FIG. **8**A under a third grid to compute the complexity factors of said antenna contour;

FIG. **9**A shows an example of a quasi-rectangular antenna contour featuring a great degree of convolution in its perimeter under a first grid to compute the complexity factors of said antenna contour;

FIG. **9**B shows the example of the quasi-rectangular antenna contour featuring a great degree of convolution of FIG. **9***a* under a second grid to compute the complexity factors of said antenna contour;

FIG. **9**C shows the example of the quasi-rectangular antenna contour featuring a great degree of convolution of FIG. **9***a* under a third grid to compute the complexity factors of said antenna contour;

FIG. **10**A shows an example of a triple branch antenna contour under a first grid to compute the complexity factors of said antenna contour;

FIG. **10**B shows the example of the triple branch antenna contour of FIG. **10**A under a second grid to compute the complexity factors of said antenna contour;

FIG. **10**C shows the example of the triple branch antenna contour of FIG. **10**A under a third grid to compute the complexity factors of said antenna contour;

FIG. **11** shows the mapping of the antenna contour of FIGS. **6**, **8**, **9** and **10** in the F_{32} vs. F_{21} space;

FIG. **12**A shows an example of antenna contour of the antenna system of a MFWD according to the present invention;

FIG. **12**B shows an example of a PCB of a MFWD including a layer that serves as the ground plane to the antenna system of FIG. **12**A;

FIG. **13**A shows the antenna contour of FIG. **12**A placed under a first grid to compute the complexity factors of said antenna contour;

FIG. **13**B shows the antenna contour of FIG. **12**A placed under a second grid to compute the complexity factors of said antenna contour;

FIG. **13**C shows the antenna contour of FIG. **12**A placed under a third grid to compute the complexity factors of said antenna contour;

FIG. **14**A shows an antenna contour according to the present invention placed under a first grid to compute the complexity factors of said antenna contour;

FIG. **14**B shows the antenna contour according to the present invention of FIG. **14***a* placed under a second grid to compute the complexity factors of said antenna contour;

FIG. **14**C shows the antenna contour according to the present invention of FIG. **14***a* placed under a third grid to compute the complexity factors of said antenna contour;

FIG. **15** shows the mapping of the antenna contour of FIGS. **12** and **14** in the F_{32} vs. F_{21} space;

FIG. **16** illustrates a flow diagram for optimizing the geometry of an antenna system to obtain superior performance within a wireless device;

FIGS. **17**A-**17**H illustrate the progressive modification of an antenna system through the different steps of the optimization process in accordance with the principles of the present invention;

FIG. **18** is a complexity factor plain graphically illustrating the complexity factors of FIGS. **17**A-**17**H;

FIG. **19**A is a graphical representation of the VSWR of the antenna system relative to frequency;

FIG. **19**B is a graphical representation of the efficiency of the antenna system as a function of the frequency; and

FIGS. **20**A-**20**F illustrate cross-sectional views of exemplary MFWDs comprising three bodies.

DETAILED DESCRIPTION

Referring first to FIG. **1**A, a multifunction wireless device (MFWD) of the present invention **100** advantageously comprises five functional blocks: display **11**, processing module **12**, memory module **13**, communication module **14** and power management module **15**. The display **11** may be, for example, a high resolution LCD or equivalent is an energy consuming module and most of the energy drain comes from the backlight use. The processing module **12**, that is the microprocessor or CPU and the associated memory module **13**, are also major sources of power consumption. The fourth module responsible of energy consumption is the communication module **14**, an essential part of which is the antenna system. The MFWD **100** has a single source of energy and it is the power management module **15** mentioned above that provides and manages the energy of the MFWD **100**. In a preferred embodiment, the processing module **12** and the memory module **13** have herein been listed as separate modules. However, in another embodiment, the processing module **12** and the memory module **13** may be separate functionalities within a single module or a plurality of modules. In a further embodiment, two or more of the five functional blocks of the MFWD **100** may be separate functionalities within a single module or a plurality of modules.

The MFWD **100** generally comprises one, two, three or more multilayer printed circuit boards (PCBs) on which to carry and interconnect the electronics. At least one of the PCBs includes feeding means and/or grounding means for the antenna system.

At least one of the PCBs, preferably the same one as the at least one PCB including feeding means and/or grounding means, includes a layer that serves as a ground plane of the antenna system.

The antenna system within the communication module **14** generally is regarded as an essential element of a multifunction wireless device. In particular it can be regarded an essential element of the MFWD **100**, as it provides the MFWD **100** with wide geographical and range coverage, high-speed connection and/or seamless connection to multiple networks and standards. Thus, a volume of space within the MFWD **100** needs to be made available to the integration of the antenna system. However, the integration of the antenna system is complicated by the fact that the MFWD **100** also includes one or more advanced functions provided by at least one, two, three or more additional electronic subsystems within the various modules **11-15** such as:

- a receiver of analog and/or digital sound signals (e.g. for FM, DAB, XDARS, SDARS, or the like).
- a receiver of digital broadcast TV signals (such as DVB-H, DMB)
- a module to download and play streamed video,
- an advanced image recording system (comprising e.g. one, two, three or more of: optical or digital zoom; flash light; one, two or more image sensors, one, two or more of which may be more than 2 Megapixels in size),
- data storage means in excess of 1 GB (fixed and/or removable; hard disk drive; non volatile (e.g. magnetic, ferroelectric or electronic) memory),
- a high resolution image and/or character and graphic display (more than 100 times 100 pixels or more than 320 times 240 pixels (e.g. more than 75,000 pixels) and/or 65,000 color levels or more),
- a full keyboard (e.g. number keys and character keys separated therefrom and/or at least 26, 30, 36, 40 or 50 keys; the keyboard may be integrated within the MFWD or may be connectable to the MFWD by a cable or a short range wireless connectivity system),
- a touch screen with a size of at least half of the overall device
- a geolocalization system (such as e.g. GPS or Galileo or a mobile network related terrestrial system),
- and/or a module to handle an internet access protocol and/or messaging capabilities (such as email, instant messaging, SMS, MMS or the like).

In some examples, the integration of an antenna system into the MFWD **100** is further complicated by the presence in the MFWD **100** of additional antennas, such as for example antennas for reception of broadcast radio and/or TV, antennas for geolocalization services, and/or antennas for wireless connectivity systems.

The MFWD **100** according to one embodiment achieves an efficient integration of an antenna system alongside other electronic modules and/or subsystems that provide sophisticated functionality to the MFWD **100**, (and possibly also in conjunction with additional antennas), in a way that the MFWD meets size, weight and/or battery consumption constraints critical for a portable small-sized device.

The MFWD **100** according to one embodiment is preferably able to provide both voice and high-speed data transmission and receive services through at least one or more of said frequency regions in the spectrum. For that purpose, a MFWD will include the RF capabilities, antenna system and signal processing hardware to connect to a mobile network at a speed of preferably at least 350 Kbits/s, while in some embodiments the data transfer will be performed with at least 1 Mbit/s, 2 Mbit/s or 10 Mbit/s or beyond. For this purpose, a MFWD will preferably include at least 3G (such as for instance UMTS, UMTS-FDD, UMTS-TDD, W-CDMA, cdma2000, TD-SCDMA, Wideband CDMA) and/or 3.5G and/or 4G services (including for instance HSDPA, WiFi, WiMax, WiBro and other advanced services) in one or more of said frequency regions. In some embodiments a MFWD will include also 2G and 2.5G services such as GSM, GPRS, EDGE, TDMA, PCS, CDMA, cdmaOne. In some embodiments a MFWD will include 2G and/or 2.5G services at one or both of the first two frequency regions (810-960 MHz and 1710-1990 MHz) and a 3G or a 4G service in the upper frequency region (1900-2170 MHz). In particular, some MFWD devices will provide 3 GSM/GPRS services (GSM900, GSM1800, GSM1900 or PCS) and UMTS/W-CDMA, while some others will provide 4 GSM/GPRS services (GSM850, GSM900, GSM1800, GSM1900 or PCS) and UMTS and/or W-CDMA to ensure seamless connectivity to multiple networks in several geographical domains such as for instance Europe and North America. In some embodiments, a MFWD will include 3G, 3.5G, 4G or a combination of such services in said three frequency regions.

In some embodiments of the invention, the MFWD **100** includes wireless connectivity to other wireless devices or networks through a wireless system such as for instance WiFi (IEEE802.11 standards), Bluetooth, ZigBee, UWB in some additional frequency regions such as for instance an ISM band (for instance around 430 MHz or 868 MHz, or within 902-928 MHz or in the 2400-2480 MHz range, or in the 5.1-5.9 GHz frequency range or a combination of them) and/or within a ultra wide-band range (UWB) such as the 3-5 GHz or 3-11 GHz frequency range.

In some embodiments of the invention, the MFWD **100** provides voice over IP services (VoIP) through a wireless connection using one or more wireless standards such as WiFi, WiMax and WiBro, within the 2-11 GHz frequency region or in particular the 2.3-2.4 GHz frequency region.

The MFWD **100** may have a bar shape, which means that it is given by a single body. It may also have a two-body structure such as a clamshell, flip or slider structure. It may further or additionally have a twist structure in which a body portion e.g. with a screen can be twisted (rotated with two or more axes of rotation which are preferably not parallel).

The MFWD **100** may operate simultaneous in two or more wireless services (e.g. a short range wireless connectivity service and a mobile telephone service, a geolocalization service and a mobile telephone service, etc.).

For any wireless service, more than one antenna (system) may be provided in order to obtain a diversity system and/or a multiple input/multiple output system.

In a MFWD **100** according to an embodiment of the present invention, the structure of the antenna system is advantageously shaped to efficiently use the volume of physical space made available for its integration within the MFWD **100** in order to obtain a superior RF performance of the antenna system (such as for example, and without limitation, input impedance level, impedance bandwidth, gain, efficiency, and/or radiation pattern) and/or superior RF performance of the MFWD **100** (such as for example and without limitation, radiated power, received power and/or sensitivity) in at least one of the communication standards of operation in at least one of the frequency regions. Alternatively, the antenna system can be advantageously shaped to minimize the volume required within the MFWD **100** yet still achieve a certain RF performance.

As a consequence, the resulting MFWD **100** may exhibit in some examples one, two, three or more of the following features:

increased communication range,

improved quality of the communication or quality of service (QoS),

extended battery life for higher autonomy of the device,

reduced device profile and/or the size (an aspect particularly critical for slim phones and/or twist phones),

and/or reduced weight of the device (aspect particularly critical for multimedia phones and/or smart phones),

all of which are qualities that translate into increased user acceptance of the MFWD **100**.

The antenna system also comprises at least one feeding point and may optionally comprise one, two or more grounding points. In some examples of MFWDs, the antenna system may comprise more than one feeding point, such as for example two, three or more feeding points.

The MFWD **100** comprises one, two, three, four, five or more contact terminals. A contact terminal couples the feeding means included in a PCB of the MFWD **100** with a feeding point of the antenna system. The feeding means comprise one, two, three or more RF transceivers coupled to the antenna system through contact terminals.

Similarly, a contact terminal can also couple the grounding means included in a PCB of the MFWD **100** with a grounding point of the antenna system. A contact terminal may take for instance the form of a spring contact with a corresponding landing area, or a pogo pin with a corresponding landing area, or a couple of pads held in electrical contact by fastening means (such as a screw) or by pressure means.

A volume of space within the MFWD **100** of one embodiment of the invention is dedicated to the integration of the antenna system into the device. An antenna box for the MFWD **100** is herein defined as being the minimum-sized parallelepiped of square or rectangular faces that completely encloses the antenna volume of space and wherein each one of the faces of the minimum-sized parallelepiped is tangent to at least one point of the volume. Moreover, each possible pair of faces of the minimum-size parallelepiped shares an edge forming an inner angle of 90°.

For example, the antenna box shown at **103** of FIG. **1**B delimits the volume of space within the MFWD **100** dedicated to the antenna system in the sense that, although other elements of the MFWD **100** (such as for instance an electronic module or subsystem) can be within the antenna box, no portion of the antenna system can extend outside the antenna box.

Therefore, although the volume within the MFWD **100** dedicated to the integration of the antenna system will generally be irregularly shaped, the antenna box itself will have the shape of a right prism (i.e., a parallelepiped with square or rectangular faces and with the inner angles between two faces sharing an edge being 90°).

An antenna system of the MFWD **100** of one embodiment of the invention has a structure able to support different radiation modes so that the antenna system can operate with good performance and reduced size in the communication standards allocated in multiple frequency bands within at least three different regions of the electromagnetic spectrum. Such an effect is achieved by appropriately shaping the structure of the antenna system in a way that different paths are provided to the electric currents that flow on the conductive parts of said structure of the antenna system, and/or to the equivalent magnetic currents on slots, apertures or openings within said structure, thereby exciting radiation modes for the multiple frequency bands of operation. In some cases the structure of an antenna system will comprise a first portion that provides a first path for the currents associated with a radiation mode in a first frequency band within a first region of the electromagnetic spectrum, a second portion that provides a second path for the currents associated with a radiation mode in a second frequency band within a second region of the electromagnetic spectrum and a third portion that provides a third path for the currents associated with a radiation mode in a third frequency band within a third region of the electromagnetic spectrum.

Some of these basic concepts of antenna design are set forth in co-pending U.S. patent application Ser. No. 11/179, 257, filed Jul. 12, 2005 and entitled "Multi-Level Antenna" and in co-pending U.S. patent application Ser. No. 11/179, 250, filed Jul. 12, 2005 and entitled "Space-Filing Miniature Antenna" both of which are hereby incorporated by reference herein.

In some embodiments of the invention the first, second and third portions are overlapping partially or completely with each other, while in other embodiments the three portions are essentially non-overlapping. In some embodiments only two of the three portions overlap either partially or completely and in some cases one portion of the three portions is the entire antenna system.

In some examples, at least one of the paths has an electrical length substantially close to one time, three times, five times or a larger odd integer number of times a quarter of the wavelength at a frequency of the associated radiation mode. In other examples, at least one of the paths has an electrical length approximately equal to one time, two times, three times or a larger integer number of times a half of the wavelength at a frequency of the associated radiation mode.

A structure of an antenna system of the MFWD **100** according to the present invention is able to support different radiation modes. Such an effect is advantageously achieved by means of one of, or a combination of, the following mechanisms:

creating slots, apertures and/or openings within the structure,

bending and/or folding the structure,

because an edge-rich, angle-rich and/or discontinuity-rich structure is obtained in which different portions of the structure offer longer and more winding paths for the electric currents and/or the equivalent magnetic currents associated with different frequency bands of operation than would the path of a simpler structure that uses neither one of the aforementioned mechanisms.

The process of shaping the structure of the antenna system into a configuration that supports different radiation modes can be regarded as the process of lowering the frequency of a first radiation mode associated with a first frequency band, and/or subsequently including additional radiation modes associated with additional frequency bands, to an antenna formed of a substantially square or rectangular conducting plate (or a substantially planar structure) that occupies the largest face of the antenna box.

The geometry of a substantially square or rectangular conducting plate occupying a largest face of the antenna box is an advantageous starting point for the design of the geometry of the structure of the antenna system since such a structure offers a priori the longest path for the currents of a radiation mode corresponding to a lowest frequency band, together with the maximum antenna surface. Antenna designers have frequently encountered difficulty in maintaining the performance of small antennas. There is a fundamental physical limit between size and bandwidth in

that the bandwidth of an antenna is generally directly related with the volume that the antenna occupies. Thus, in antenna design it may be preferable to pursue maximization of the surface area of an antenna in order to achieve maximum bandwidth. The geometry of an antenna comprised of a substantially square or rectangular conducting plate can be modified by at least one of the following:

- creating slots, gaps or apertures within the extension of the plate,
- removing peripheral parts of the plate,
- folding or bending parts of said plate, so that the folded or bent parts are no longer on the plane defined originally by the plate,
- and/or including additional conducting parts in the antenna box that are not contained on the plane originally defined by the plate;

in order to adapt the antenna system to the frequency bands of operation, to the space required by additional electronic modules or subsystems, and/or to other space constraints of the MFWD **100** (as for example those imposed by the ergonomics, or the aesthetics of the MFWD).

In some examples within embodiments of the present invention, one or several modifications of the structure of an antenna system are aimed at lengthening the path of the electric currents and/or the equivalent magnetic currents of a particular radiation mode to decrease its associated frequency band. In other examples, one or several modifications of the structure of an antenna system are aimed at splitting, or partially diverting, the electric currents and/or the equivalent magnetic currents on different parts of the structure of the antenna system to enhance multimode radiation, which may be advantageous for wideband behavior.

The resulting antenna structure (i.e., after modifying its geometry) includes a plurality of portions that allow the operation of the antenna system in multiple frequency bands. Generally, the structure of the antenna system comprises one, two, three, four or more antenna elements with each element being formed by a single conducting geometric element, or by a plurality of conducting geometric elements that are in electrical contact with one another (i.e., there is electrical continuity for direct or continuous current flow). One antenna element may comprise one or more portions of the structure of the antenna system and one portion of the antenna system may comprise one, two, three or more antenna elements. Different antenna elements may be electromagnetically coupled (either capacitively coupled or inductively coupled). Generally an antenna element of the antenna system is not connected by direct contact to another antenna element of said antenna system, unless such contact is optionally done through the ground plane of the antenna system. In some examples, an antenna system with a structure comprising several antenna elements is advantageous to increase the number of frequency bands of operation of said antenna system and/or to enhance the RF performance of said antenna system or that of a MFWD including said antenna system.

In some examples, slots, gaps or apertures created between different antenna elements, or between parts of a same antenna element, serve to decrease electromagnetic coupling between the antenna elements, or the parts of the same antenna element. In other examples, the structure of the antenna system seeks to create proximity regions between antenna elements, or between parts of a same antenna element, to enhance the coupling between the antenna elements, or the parts of a same antenna element.

The design of the structure of the antenna system is intended to use efficiently as much of the volume of the space within the antenna box as possible in order to obtain a superior RF performance of the antenna system and/or superior RF performance of the MFWD **100** in at least one frequency band. In particular, according to the present invention, the structure of the antenna system comes into contact with each of the six (6) faces of the antenna box in at least one point of each face to make better use of the available volume. However, it is generally advantageous to position the geometrical complexity of the structure predominantly on a largest face of the antenna box, and use the third dimension of the antenna box (i.e., the dimension not included in said largest face) to separate the antenna system from other elements of the MFWD **100** (such as for instance, and without limitation, a ground plane, a grounded shield can, a loudspeaker module, a vibrating module, a memory card socket, a hard disk drive, and/or a connector) that may degrade the RF performance of the antenna system and/or the RF performance of the MFWD **100**.

For one purpose of the design of the antenna system, an antenna rectangle is defined as being the orthogonal projection of the antenna box along the normal to the face with largest area of the antenna box.

In some exemplary MFWDs, one of the dimensions of the antenna box can be substantially smaller than any of the other two dimensions, or even be close to zero. In such cases, the antenna box collapses to a practically two-dimensional structure (i.e., the antenna box becomes approximately the antenna rectangle).

The antenna rectangle has a longer side and a shorter side. The length of the longer side is referred to as the width of the antenna rectangle (W), and the length of the shorter side is referred to as the height of the antenna rectangle (H). The aspect ratio of the antenna rectangle is defined as the ratio between the width and the height of the antenna rectangle.

In addition to the antenna rectangle, a ground plane rectangle is defined as being the minimum-sized rectangle that encompasses the ground plane of the antenna system included in the PCB of the MFWD **100** that comprises the feeding means responsible for the operation of the antenna system in its lowest frequency band. That is, the ground plane rectangle is a rectangle whose edges are tangent to at least one point of the ground plane.

The area ratio is defined as the ratio between the area of the antenna rectangle and the area of the ground plane rectangle.

In some examples, the antenna system of the present invention advantageously places a feeding point of the antenna system, preferably a feeding point responsible for the operation of the antenna system in its lowest frequency band, near a corner of the antenna rectangle, because it may provide a longer path on the structure of the antenna system for the electric currents and/or the equivalent magnetic currents coupled to the antenna system through the feeding point.

In other examples, the antenna system of the present invention advantageously places a feeding point of the antenna system, preferably a feeding point responsible for the operation of the antenna system in its lowest frequency band, in such a way that a contact terminal of the MFWD **100** is located near an edge of a ground plane encompassed by the ground plane rectangle. Preferably that edge is common with a side of the ground plane rectangle, and preferably the side is a short side of the ground plane rectangle. Such placement of the feeding point of the antenna system, and that of the contact terminal of the

MFWD **100** associated with the feeding point, may provide a longer path for electric and/or magnetic currents flowing on the ground plane of the antenna system enhancing the RF performance of the antenna system, or that of the MFWD **100**, in at least the lowest frequency band. This becomes particularly relevant in those MFWD **100** having form factors that require a small size of the ground plane rectangle and, consequently, a small size of the whole device.

The structure of the antenna system becomes geometrically more complex as the number of frequency bands in which the MFWD **100** has to operate increases, and/or the size of the antenna box decreases, and/or the RF performance requirements are made more stringent in at least one frequency band of operation. In a MFWD **100** according to the present invention, the structure of the antenna system is geometrically defined by its antenna contour. The antenna contour of the antenna system is a set of joined and/or disjointed segments comprising:

- the perimeter of one or more antenna elements placed in the antenna rectangle,
- the perimeter of closed slots and/or closed apertures defined within the antenna elements, and/or the orthogonal projection onto the antenna rectangle of perimeters of antenna elements, or perimeters of or parts of antenna elements that are placed in the antenna box but not in the antenna rectangle.

The antenna contour, i.e., its peripheral both internally and externally, can comprise straight segments, curved segments or a combination thereof. Not all the segments that form the antenna contour need to be connected (i.e., to be joined). In some cases, the antenna contour comprises two, three, four or more disjointed subsets of segments. A subset of segments is defined by one single segment or by a plurality of connected segments. In other cases, the entire set of segments that form the antenna contour are connected together defining a single set of joined segments (i.e., the antenna contour has only one subset of segments).

Along the contour different segments can be identified e.g. by a corner between two segments, wherein the corner is given by a point on the contour where no unique tangent can be identified. At the corners the contour has an angle. The segments next to a corner may be straight or curved or one straight and the other curved. Further, segments may be separated by a point where the curvature changes from left to right or from right to left. In a sine curve, for example such points are given where the curve intersects the horizontal axis (x-axis, abscissa, sin(x)=0).

It is preferred that right and left curved segments are provided (when following the contour) and/or that at corners angles to the left and to the right (when following the contour) are provided. Preferably the numbers of left and right curved segments respectively, (if provided) do not differ by more than 80%, 70%, 60%, 50%, 40%, 30%, 20% or 10% of the larger of the two numbers. Also the number of corner angles between adjacent segments which following the contour go to the right and those that go to the left do not differ by more than 80%, 70%, 60%, 50%, 40%, 30%, 20% or 10% of the larger of the two numbers. Further preferably the number of the left curved segments plus the number of the corners where the contour turns left and the number of the right curved segments plus the number of corners where the contour turns right do not differ by more than 80%, 70%, 60%, 50%, 40%, 30%, 20% or 10% of the larger of the two numbers.

Generally, one, two, three or more subsets of segments of the antenna contour advantageously each comprise at least a certain minimum number of segments that are connected in such a way that each segment forms an angle with any adjacent segments or a curved segment interposed between such segments, such that no pair of adjacent segments defines a larger straight segment. The angles at corners or curved segments increase the degree of convolution of the curves formed by the segments of each of said subsets leading to an antenna contour that is geometrically rich in at least one of edges, angles, corners or discontinuities, when considered at different levels of detail. Possible values for the minimum number of segments of a subset include 5, 6, 7, 8, 10, 12, 14, 16, 18, 20, 25, 30, 35, 40, 45 and 50. Also a maximum number of segments of a subset may be given. Possible values of said maximum number are 10, 15, 20, 25, 30, 40, 50, 75, 100, 150, 200, 250 and 500.

Additionally, to shape the structure of an antenna system in some embodiments the segments of the antenna contour should be shorter than at least one fifth of a free-space wavelength corresponding to the lowest frequency band of operation, and possibly shorter than one tenth of said free-space wavelength. Moreover, in some further examples the segments of the antenna contour should be shorter than at least one twentieth of said free-space wavelength.

The antenna contour needs to make efficient use of the area of the antenna rectangle in order to attain enough geometrical complexity to make the resulting structure of an antenna system suitable for the MFWD **100**. In particular, according to the present invention, the antenna contour preferably comes into contact with each of the four (4) sides of the antenna rectangle in at least one point of each side of the antenna rectangle. The antenna contour should include at least ten segments in order to provide some multiple frequency band behavior, and/or size reduction, and/or enhanced RF performance to the resulting antenna system. However, a larger number of segments may be used, such as for instance 15, 20, 25, 30, 35, 40, 45, 50 or more segments. In general, the larger the number of segments of the antenna contour and the narrower the angles between connected segments, the more convoluted the structure of the antenna system becomes. The number of segments of the antenna contour may be less than 20, 25, 30, 40, 50, 75, 100, 150, 200, 250 or 500.

The length of the antenna contour of an antenna system is defined as the sum of the lengths of each one of the disjointed subsets that make up the antenna contour. The larger the length of the antenna contour, the higher the richness of the antenna contour in at least one of edges, angles, corners or discontinuities, making the resulting structure of an antenna system suitable for a MFWD.

In some examples the length of the antenna contour is larger than 1, 2, 3, 4, 5, 6, 7, 8, 9, 10, 12, 15, 20, 25, 30, 40, or more times the length of the diagonal of the antenna rectangle or less than any of those values.

Each of the one or more antenna elements comprised in the antenna system might be arranged according to different antenna topologies, such as for instance any one of the topologies selected from the following list: monopole antenna, dipole antenna, folded dipole antenna, loop antenna, patch antenna (and its derivatives for instance PIFA antennas), IFA antenna, slot antenna. Any of such antenna arrangements might comprise a dielectric material with a high dielectric constant (for instance larger than 3) to influence the operating frequency, impedance or both aspects of the antenna system.

In accordance with embodiments of the invention, the level of complexity of an antenna contour can be advantageously parameterized by means of two complexity factors, hereinafter referred to as F_{21} and F_{32}, which capture and

characterize certain aspects of the geometrical details of the antenna contour (such as for instance its edge-richness, angle-richness and/or discontinuity-richness) when viewed at different levels of scale.

For the computation of F_{21} and F_{32} of a particular antenna, a first, a second, and a third grid (hereinafter called grid G_1, grid G_2 and grid G_3 respectively) of substantially square or rectangular cells are placed on the antenna rectangle. The three grids are adaptive to the antenna rectangle. That is, the size and aspect ratio of the cells of each one of said three grids is determined by the size and aspect ratio of the antenna rectangle itself. The use of adaptive grids is advantageous because it provides a sufficient number of cells within the antenna rectangle to fully capture the geometrical features of the antenna contour at differing levels of detail.

Moreover, the three grids are selected to span a range of levels of scale corresponding to two octaves: A cell of grid size G_2 is half the size of a cell of grid G_1 (i.e., a ½ scaling factor or an octave of scale); a cell of grid size G_3 is half the size of a cell of grid G_2, or one fourth the size of a cell of grid G_1 (i.e., a ¼ scaling factor or two octaves of scale). A range of scales of two octaves provides a sufficient variation in the size of the cells across the three grids as to capture gradually from the coarser features of the antenna contour to the finer ones.

Grids G_1 and G_3 are constructed from grid G_2, which needs to be defined in the first place.

As far as the second grid (or grid G_2) is concerned, the size of a cell and its aspect ratio (i.e., the ratio between the width and the height of the cells) are first chosen so that the antenna rectangle is perfectly tessellated with an odd number of columns and an odd number of rows.

In the present invention, columns of cells are associated with the longer side of an antenna rectangle, while rows of cells are associated with a shorter side of the antenna rectangle. In other words, a longer side of the antenna rectangle spans a number of columns, with the columns being parallel to the shorter side of the antenna rectangle. In the same way a shorter side of the antenna rectangle spans a number of rows, with the rows being parallel to the longer side of the antenna rectangle.

If the antenna rectangle is tessellated with an excessive number of columns, then the size of the resulting cells is much smaller than the range of typical sizes of the features necessary to shape the antenna contour. However, if the antenna rectangle is tessellated with an insufficient number of columns, then the size of the resulting cells is much larger than the range of typical sizes of the features necessary to shape the antenna contour. It has been found that setting to nine (9) the number of columns that tessellate the antenna rectangle provides an advantageous compromise, for the preferred sizes of an MFWD, and the corresponding available volumes for the antenna system, according to the present invention. Therefore, a cell width (W_2) is selected to be equal to a ninth (⅑) of the length of the longer side of the antenna rectangle (W).

Moreover, it is also advantageous to use cells that have an aspect ratio close to one. In other words, the number of columns and rows of cells of the second grid that tessellate the antenna rectangle are selected to produce a cell as square as possible. A grid formed by cells having an aspect ratio close to one is preferred in order to perceive features of the antenna contour using approximately a same level of scale along two orthogonal directions defined by the longer side and the shorter side of the antenna rectangle. Therefore, preferably, the cell height (H_2) is obtained by dividing the length of the shorter side of the antenna rectangle (H) by the odd integer number larger than one (1) and smaller than, or equal to, nine (9), that results in an aspect ratio W_2/H_2 closest to one.

In the particular case that two different combinations of a number of columns and rows of cells of the second grid produce a cell as square as possible, a second grid is selected such that the aspect ratio is larger than 1.

Thus, the antenna rectangle is tessellated perfectly with 9 by (2n+1) cells of grid G_2, wherein n is an integer larger than zero (0) and smaller than five (5).

A first grid (or grid G_1) is obtained by combining four (4) cells of the grid G_2. Each cell of the grid G_1 consists of a 2-by-2 arrangement of cells of grid G_2. Therefore, a cell of the grid G_1 has a cell width equal to twice (2) the width of a cell of the second grid (W_2) (i.e., $W_1=2\times W_2$); and a cell height (H_1) equal to twice (2) the height of a cell of the second grid (H_2) (i.e., $H_1=2\times H_2$).

Since grid G_2 tessellates perfectly the antenna rectangle with an odd number of columns and an odd number of rows, an additional row and an additional column of cells of said grid G_2 are necessary to have enough cells of the grid G_1 as to completely cover the antenna rectangle.

In order to uniquely define the tessellation of the antenna rectangle with grid G_1 a corner of said antenna rectangle is selected to start placing the cells of the grid G_1.

A feeding point corner is defined as being the corner of the antenna rectangle closest to a feeding point of the antenna system responsible for the operation of the antenna system in its lowest frequency band. In case that the feeding point is placed at an equal distance from more than one corner of the antenna box, then the corner closest to a perimeter of the ground plane of the PCB of the MFWD **100** is selected, preferably the corner closest to a shorter edge of the ground-plane rectangle. In case both corners are placed at the same distance from the feeding point and from the shorter edge of the ground-plane rectangle, the feeding point corner will be chosen as follows. For reasons of ergonomics and taking into account the absorption of radiation in the hand of the MFWD user, and considering that there is a predominance of right hand users, it has been observed that in some embodiments it is convenient to place a feeding point and/or to designate the feeding point corner on the corner of the antenna rectangle which is closer to a left corner of the ground plane rectangle. That is, the left side of the ground plane rectangle being the closest to the left side of the MFWD **100** as seen by a right-handed user typically holding the MFWD **100** with the right hand to originate a phone call, while facing a display of the MFWD **100**. Also, the selection of the feeding point corner on the top or bottom corner on the left side of the MFWD **100** depends on the position of the antenna system with respect to a body of the MFWD **100**. That is, an upper-left corner of the antenna rectangle is preferred in those cases in which the antenna system is placed substantially near the top part of the body of the MFWD (usually, above and/or behind a display) and a lower-left corner of the antenna rectangle is preferred in those cases in which the antenna system is placed substantially near the bottom part of the body of the MFWD **100** (usually, below and/or behind a keypad). Again, due to ergonomics reasons, a top and a bottom part of a body of a MFWD are defined as seen by a right-handed user holding MFWD typically with the right hand to originate a phone call, while facing a display **501** as seen in FIGS. **5**(*a*) and **5**(*b*).

A first cell of the grid G_1 is then created by grouping four (4) cells of grid G_2 in such a manner that a corner of the first

cell is the feeding point corner, and the first cell is positioned completely inside the antenna rectangle.

Once the first cell of the grid G_1 is placed, other cells of said grid G_1 can be placed uniquely defining the relative position of the grid G_1 with respect to the antenna rectangle. The antenna rectangle spans 5 by (n+1) cells of the grid G_1, (when G_2 includes 9 columns) requiring the additional row and the additional column of cells of the grid G_2 that meet at the corner of the antenna rectangle that is opposite to the feeding point corner, and that are not included in the antenna rectangle.

The complexity factor F_{21} is computed by counting the number of cells N_1 of the grid G_1 that are at least partially inside the antenna rectangle and include at least a point of the antenna contour (in the present invention the boundary of the cell is also part of the cell), and the number of cells N_2 of the grid G_2 that are completely inside the antenna rectangle and include at least a point of the antenna contour, and then applying the following formula:

$$F_{21} = -\frac{\log(N_2) - \log(N_1)}{\log\left(\frac{1}{2}\right)}$$

Complexity factor F_{21} is predominantly characterized by capturing the complexity and degree of convolution of features of the antenna contour that appear when the contour is viewed at coarser levels of scale. As it is illustrated in the example of FIGS. **8**A-C, the election of grid G_1 **801** and grid G_2 **802**, and the fact that with grid G_2 **802** the antenna rectangle **800** is perfectly tessellated by an odd number of columns and an odd number of rows, results in a value of the factor F_{21} equal to one for an antenna contour shaped as the antenna rectangle **800**. On the other hand, an antenna contour whose shape is inspired in a Hilbert curve that fills the antenna rectangle **800** features a value of the factor F_{21} smaller than two. Therefore the factor F_{21} is geared more towards assessing an overall complexity of an antenna contour (i.e., whether the degree of convolution of an antenna contour distinguishes sufficiently from a simple rectangular shape when looked at from a zoomed-out view), rather than estimating if the full complexity of an antenna contour (i.e., the complexity of the antenna contour when looked at from a zoomed-in view) approaches that of a highly-convoluted curve such as the Hilbert curve.

Moreover, in some embodiments the factor F_{21} is related to the number of paths that a structure of the antenna system provides to electric currents and/or the equivalent magnetic currents to excite radiation modes (i.e., factor F_{21} tends to increase with the number of antenna portions within the structure of the antenna system and/or the number of antenna elements that form the antenna system). In general, the more frequency bands and/or radiation modes that need to be supported by the antenna structure of the MFWD **100**, the higher the value of the factor F_{21} that needs to be attained by the antenna contour of the antenna system of the MFWD **100**. This is in particular more important as the size of the antenna rectangle decreases.

A third grid (or grid G_3) is readily obtained by subdividing each cell of grid G_2 into four cells, with each of the cells having a cell width (W_3) equal to one half (½) of the width of a cell of the second grid (W_2) (i.e., W_3=½×W_2); and a cell height (H_3) equal to one half (½) of the height of a cell of the second grid (H_2) (i.e., H_3=½×H_2).

Therefore, since each cell of the grid G_2 is replaced with 2-by-2 cells of the grid G_3, then 18 by (4n+2) cells of grid G_3 are thus required to tessellate completely the antenna rectangle.

The complexity factor F_{32} is computed by counting the number of cells N_2 of grid G_2 that are completely inside the antenna rectangle and include at least a point of the antenna contour, and the number of cells N_3 of the grid G_3 that are completely inside the antenna rectangle and include at least a point of the antenna contour, and applying then the following formula:

$$F_{32} = -\frac{\log(N_3) - \log(N_2)}{\log\left(\frac{1}{2}\right)}$$

Complexity factor F_{32} is predominantly characterized by capturing the complexity and degree of convolution of features of the antenna contour that appear when the contour is viewed at finer levels of scale. As it is illustrated in the example of FIGS. **8**A-C, the election of grid G_2 **802** and grid G_3 **803** is such that an antenna contour whose shape is inspired in a Hilbert curve that fills the antenna rectangle **800** features a value of the factor F_{32} equal to two. On the other hand, an antenna contour shaped as the antenna rectangle **800** features a value of the factor F_{32} larger than one. Therefore the factor F_{32} is geared more towards evaluating the full complexity of an antenna contour (i.e., whether the degree of convolution of an antenna contour tends to approach that of a highly-convoluted curve such as the Hilbert curve), rather than discerning if said antenna contour is substantially different from a rectangular shape.

Moreover, the factor F_{32} is in some embodiments related to the degree of miniaturization achieved by the antenna system. In general, the smaller the antenna box of the MFWD **100**, the higher the value of the factor F_{32} that needs to be attained by the antenna contour of the antenna system of the MFWD **100**.

The complexity factors F_{21} and F_{32} span a two-dimensional space on which the antenna contour of the antenna system of the MFWD **100** is mapped as a single point with coordinates (F_{21}, F_{32}). Such a mapping can be advantageously used to guide the design of the antenna system by tailoring the degree of convolution of the antenna contour until some preferred values of the factors F_{21} and F_{32} are attained, so that the resulting antenna system: (a) provides the required number of frequency bands in which the MFWD operates; (b) meets MFWD size and/or integration constraints; and/or (c) enhances the RF performance of the antenna system and/or that of the MFWD in at least one of the frequency bands of operation.

In a preferred embodiment of the present invention, the MFWD **100** comprises an antenna system whose antenna contour features a complexity factor F_{21} larger than one and a complexity factor F_{32} larger than one. In a preferred embodiment, the MFWD **100** comprises an antenna system whose antenna contour features a complexity factor F_{21} larger than or equal to 1.1 and a complexity factor F_{32} larger than or equal to 1.1.

In some examples the antenna contour features a complexity factor F_{32} larger than a certain minimum value in order to achieve some degree of miniaturization.

An antenna contour with a complexity factor F_{32} approximately equal to two, despite achieving substantial size reduction, may not be preferred for the MFWD **100** of the

present invention as the antenna system is likely to have reduced capability to operate in multiple frequency bands and/or limited RF performance. Therefore in some examples of embodiments of the present invention the antenna contour features a complexity factor F_{32} smaller than a certain maximum value in order to achieve enhanced RF performance.

In some cases of embodiments of the present invention the antenna contour features a complexity factor F_{32} larger than said minimum value but smaller than said maximum value.

Said minimum and maximum values for the complexity factor F_{32} can be selected from the list of values comprising: 1.10, 1.15, 1.20, 1.25, 1.30, 1.35, 1.40, 1.45, 1.50, 1.55, 1.60, 1.65, 1.70, 1.75, 1.80, 1.85, and 1.90.

Similarly, in some examples an antenna contour advantageously features a complexity factor F_{21} larger than a lower bound and/or smaller than an upper bound. The lower and upper bounds for the complexity factor F_{21} can be selected from the list of comprising: 1.05, 1.10, 1.15, 1.20, 1.25, 1.30, 1.35, 1.40, 1.45, 1.50, 1.55, 1.60, 1.65, 1.70, 1.75, and 1.80.

The complexity factors F_{21} and F_{32} have turned out to be relevant parameters that allow for an effective antenna design. Evaluation of those parameters gives good hints on possible changes of antennas in order to obtain improved antennas.

In some cases the parameters F_{21} and F_{32} allow for easy identification of unsuitable antennas. Further those parameters may also be used in numerical optimization algorithms as target values or to define target intervals in order to speed up such algorithms.

In the following paragraphs some parameter ranges for F_{21} and F_{32} which have turned out to be particularly advantageous or useful are summarized.

It has been found that for MFWDs it is particularly useful to have a value of F_{21} larger than 1.43, 1.45, 1.47 or even preferably greater than 1.50. Such values in this complexity factor translate into a richer frequency response of the antenna which allows for more possible resonant frequencies and more frequency bands with better bandwidths or a combination of those effects.

Furthermore, for SMRT or MMT, design demands may be different since those devices are usually larger and a reduction of the antenna size is not of such utmost importance, but energy consumption may be important since those devices have to operate to provide many different functionalities. For those devices a complexity factor F_{21} of only more than 1.39, preferably 1.41 or most preferred more than 1.43 turns out to be advantageous.

For clamshell, twist or slider devices it has to be taken into account that those phones consist of at least two parts which may be moved relative to each other. As a result only a small amount of space is available for the phones and hence, a value of F_{21} of more than 1.43, 1.45, 1.47, or even more preferably greater than 1.50 is advantageous. The same applies to slim devices. For those devices, where there is the requirement of the antenna to be flat, a value of F_{21} greater than the above-mentioned limits provides sufficient possibilities for fringing electromagnetic fields to escape from the area below a patch such that the patch achieves a higher bandwidth and a higher gain. The antenna in case of clamshell, twist or slider devices does not necessarily have to become a patch or patch-like antenna.

For some MFWDs it is usually not possible to allocate a certain volume of space which is only available for the antenna. It may, for example, be necessary to fit an antenna around one, two or more openings in which a camera, a speaker, RF connectors, digital connectors, speaker connectors, power connectors, infrared ports and/or mechanical elements such as screws, plastic insets, posts or clips have to be provided. The respective opening(s) can be achieved by a certain value F_{21} which is higher than 1.38, 1.40, or 1.42, or more preferably greater than 1.45 or 1.50. It turns out that with such values for F_{21} it is possible to provide sufficient opening in order to insert other components.

For those antennas which in their physical properties come quite close to patch antennas namely those with an overlap between the antenna and the ground-plane (patch-like antennas), a value of F_{21} being higher than 1.45, 1.47, 1.50, or 1.60 turns out to be a good measure for an antenna to provide an expected improved bandwidth or gain with respect to a patch antenna without any complexity in at least one of the frequency bands. This region for F_{21} further turns out to be useful for an MFWD with two or more RF transceivers. With a lower value it will be difficult to sufficiently isolate the two RF transceivers against each other. By the complexity factor F_{21} being more than 1.45, 1.47 or 1.50 the two RF transceivers can be electrically separated sufficiently, e.g. by connecting them to two antenna portions which are not in direct electrical contact.

The last mentioned range is also equally suitable for a MFWD with two, three or more antenna elements. Those elements may be convoluted into each other in order to occupy less space which translates into a high value of F_{21}.

A MFWD with an antenna with a complexity factor of F_{32} being larger than 1.55, 1.57 or 1.60 is advantageous. Such a high value of F_{32} provides an additional factor for tuning the frequency of high frequency bands without changing the gross geometry for low frequency bands. For this range of F_{32} it turns out that the parameter F_{21} being lower than 1.41, 1.39, 1.37, or 1.35 is advantageous since for a high value of F_{32} which provides some miniaturization, F_{21} may be low in particular to avoid an antenna with too many separate portions or antenna arms since such independent portions are difficult to physically secure with a device in order to achieve proper mechanical robustness.

For a SMRT or MMT device a value of F_{32} being larger than 1.50, 1.52, 1.55 or 1.60 is desirable. The phones which usually operate in high frequency bands such as UMTS and/or a wireless connectivity at a frequency of around 2.4 GHz a higher value of F_{32} can be used to appropriately adapt the antenna to a desired resonance frequency and/or bandwidth in those bands.

For slim devices (thickness less than 14 mm, 13 mm, 12 mm, 11 mm, 10 mm, 9 mm or 8 mm) it turns out that a parameter of F_{32} being larger than 1.60, 1.62 or 1.65 may be desired in order to achieve an edge rich structure that reduces the problems of certain antenna structures, such as flat patch antennas. A high value of F_{32} may lead to an increased bandwidth which is useful in certain cases such as coverage of the UMTS band. For the same reasons, in some embodiments of MFWD and particularly in slim devices, it is preferred that the intersection of the projection of the antenna rectangle **110** onto the ground plane rectangle **202** is less than 90% of the area of said antenna rectangle. In particular, such a intersection should be in some cases below 80%, 70%, 50%, 30%, 20% or 10% of said area. Such values for the intersection may be given also for devices which are not considered slim.

For clamshell, twist or slider devices, even higher values of F_{32} such as higher than 1.63, 1.65, 1.68 or 1.70 may be necessary since in those MFWDs the antennas have to be even more flat.

MFWDs which have a camera or any other item such as a connector integrated in the antenna box it is desirable to have a value of F_{32} being larger than 1.56, 1.58, 1.60 or 1.63. For those devices it turns out that the mechanical fixing of the antenna may be difficult due to other items which are within the antenna box. With a high value of F_{32} being more than 1.55, or the other values mentioned above, the antenna usually has an edge or recess rich structure that facilitates fixing of the antenna at its border. Therefore, usually there is no problem in mechanically securing an antenna with a high value of F_{32} within a wireless device.

For antennas which are overlapping with the ground plane of a PCB of the MFWD with at least 50% or 100%, it is possible to achieve appropriate antenna performance even if the value of F_{21} is smaller than e.g. 1.42, 1.40 or 1.38 in cases that the complexity factor F_{32} is more than 1.55. Such edges, curves or steps in the border which lead to a high value of F_{32}, increase efficiency and gain since they lead to strong reorientations of current. This may compensate for lower values of F_{21}, in particular for antennas of patch-like geometry (i.e. those where the antenna overlaps 100% with the ground plane of a PCB of the MFWD).

Equally for MFWDs with two or more RF transceivers, efficient antennas are possible for values of F_{21} being lower than 1.40, 1.38 or 1.35 in cases that the complexity factor F_{32} is larger than 1.50, 1.52, 1.53, 1.57 or 1.60. Appropriate separation of the two RF transceivers is difficult with a low value of F_{21}. It may still be possible, however, with a high complexity value of F_{32}, which enables some kind of compensation for a low value of F_{21}.

In some embodiments, when a high level of complexity is sought it might be necessary to design an antenna system whose structure comprises 2, 3 or more antenna elements. Such complexity may be achieved at a coarser and/or finer level of detail. When a high level of complexity is sought in a coarser level of detail, a high value of F_{21} might be required, namely more than 1.43, 1.45, 1.47, or 1.50. When a high level of complexity is sought in a finer level of detail, a high value of F_{32} might be required, namely more than 1.61, 1.63, 1.65 or 1.70.

Furthermore, it turns out that for some MFWDs with three or more antenna elements, a value of F_{21} lower than 1.36, 1.34, 1.32, 1.30, or even less than 1.25 is advantageous. In these cases the use of an additional antenna element pursues the enhancement of the radio electric performance of the antenna system in at least one of the frequency bands rather than introducing an additional frequency band disjoined from those already supported by the antenna system. For the above mentioned reason it may be advantageous to keep the value of F_{21} below a certain maximum. That can be achieved by reducing the separation of the third or additional antenna elements with respect to the antenna elements already present in the structure of the antenna system, so that the gaps between those antenna elements are not fully observed at a coarser level of detail. Therefore, for MFWDs with three or more antenna elements, lower values of F_{21} may be preferred in certain cases. Additionally, the separation of the antenna system into three or more antenna elements allows for easier adaptation of each antenna element to space requirements within the MFWD such that miniaturization is not such an issue. Therefore, it is possible to have antennas with larger dimensions which then provide for improved radiation efficiency, higher gain and also simply easier design and hence, less costly antennas.

With MFWDs, in general, it turns out to be particularly useful to have a value of F_{21} greater than 1.42, 1.44, 1.46, 1.48 or 1.50 while at the same time having a value of F_{32} being lower than 1.44, 1.42, 1.40 or 1.38. This is because for the portion of the antenna that resonates at low frequencies (which means long wavelengths, and hence, a long antenna portion), higher miniaturization is required. This miniaturization of large-scale portions translates into a high value of F_{21} and vice versa. For higher frequencies which have smaller wavelengths, there is not such a strong requirement for miniaturization but, rather an enhanced bandwidth is desired. Therefore lower values of F_{32} may be preferred. Low values of F_{32} further allow for maximum efficiency since those antennas do not need to be extremely miniaturized.

It is particularly useful to use a parameter range of F_{21} being more than 1.32, 1.34 or 1.36 and less than 1.54, 1.52 or 1.50 while at the same time F_{32} is less than 1.44, 1.42 or 1.40 and more than 1.22, 1.24 or 1.26. In this parameter range the values of F_{21} and F_{32} assume intermediate values which give the possibility of having different design parameters such as smallness, multi-band and broadband operation, as well as an appropriate antenna gain and efficiency to be taken into account equally. This parameter range is particularly useful for MFWDs where there is no single or no two design parameters which are of outstanding importance.

Another useful parameter range is given by F_{21} being less than 1.32, 1.30 or 1.28 with a value of F_{32} being less than 1.54, 1.52 or 1.50 and at the same time being greater than 1.34, 1.36 or 1.38. This parameter range is useful for MFWDs where the robustness of the device is of outstanding importance since a low value of F_{21} leads to devices with a particularly simple geometry without having many highly diffracted portions which are difficult to mechanically secure individually within a device. In order to achieve some miniaturization, however, a value of F_{32} in the indicated range is preferred when taking into account the trade off between the disadvantages of too high values of F_{32} (in terms of too strong miniaturization which leads to a poor bandwidth) while on the other hand wanting to have at least some kind of miniaturization corresponding to F_{32} being above a lower limit.

For some MFWDs it may be desirable to have the value of F_{32} being less than 1.52, 1.50, 1.48, or 1.45. It was found that antenna elements with highly complex borders are often quite difficult to manufacture and assemble. For instance stamping tools require more resolution and wear out more easily in case of complex borders (which means high value of F_{32}) which translates into higher manufacturing costs (tooling manufacturing costs, tool maintenance cost, larger number of hits per piece of the stamping tool) and delivery lead times, particularly for large volume production.

This turns out to be important for large volume devices such as slim phones where mass production is common. High volume puts extreme pressure on manufacturing costs, time to market and production volumes.

Additionally, shapes with high factors of F_{32} are very complicated to model with appropriate CAD tools as the very complicated shapes turn out to consume a lot of computing time. This increases development costs which in turn increases total costs of such an antenna design.

Equally, for clamshell, twist or slider phones (which may have a major portion of the market share where mass manufacturing is carried out), it may be desirable to have a value of F_{32} being less than 1.30, 1.28 or 1.26.

For relatively low cost and robust antenna design, it is preferable to have the value of F_{21} being more than 1.15 or

1.17 and at the same time being less than 1.40, 1.38 or 1.36 while the value of F_{32} is less than 1.30, 1.28 and more than 1.15 or 1.17.

Additionally, it is advantageous to have a SMRT or a MMT device which is of the type twist, or clamshell.

For a MFWD which is slim (which here means it has a thickness of less than on the order of 14 mm) and is of the type clamshell, twist or slider the flatness requirement is very demanding because each of the parts forming the clamshell, twist or slider may only have a maximum thickness of 5, 6, 7, 8 or 9 mm. With the technology disclosed herein, it is possible to design flat antennas even for such MFWDs.

A MFWD incorporating 3.5G or 4G features (i.e. comprising 3G and other advanced services such as for instance HSDPA, WiBro, WiFi, WiMAX, UWB or other high-speed wireless standards, hereinafter 4G services) might require operation in additional frequency bands corresponding to said 4G standards (for instance, bands within the frequency region 2-11 GHz and some of its sub-regions such as for instance 2-11 GHz, 3-10 GHz, 2.4-2.5 GHz and 5-6 GHz or some other bands). In some cases, to achieve a maximum volume compactness it would be advantageous that the same antenna system is capable of supporting the radiation modes corresponding to the additional frequency bands. Nevertheless, this approach can be inconvenient as it will increase complexity to the RF circuitry of the MFWD **100**, for example by filters to separate the frequency bands of the 4G services from the frequency bands of the rest of services. Therefore it may be advantageous to have a dedicated antenna for 4G services although inside the antenna box.

In other cases, achieving good isolation between the frequency bands of the 4G services and the frequency bands of the rest of services (3G and below) is preferred to compactness. In those cases the 4G antenna (i.e. the one or more additional antenna covering one or more of the 4G services) will preferably be separated as much as possible from the antenna box. Generally the longer side of the antenna rectangle is placed alongside a short edge of the ground plane rectangle. In some cases it would be advantageous to place the 4G antenna substantially close to the edge that is opposite to the shorter edge. In other cases it would be advantageous to place the 4G antenna substantially close to an edge that is adjacent to the shorter edge. Therefore since the MFWDs physical dimensions are usually predefined, the separation between antennas can be further increased by reducing the shorter side of the antenna rectangle and thus increasing its aspect ratio. As a consequence, for those devices, it may be desirable to have a value of F_{32} higher than 1.35, 1.50, 1.60, 1.65 or 1.75. When the complexity factor F_{21} is in the lower half of the typical range, for example when F_{21} is smaller than 1.40, it may be advantageous to have a value of F_{32} higher than 1.35. On the other hand when the complexity factor F_{21} is in the upper half of its typical range, for example when F_{21} is larger than 1.45, it may be advantageous to have a value of F_{32} higher than a minimum value that can be selected from the list of values comprising: 1.10, 1.15, 1.20, 1.25, 1.30, 1.35, 1.40, 1.45, 1.50, 1.55, 1.60, 1.65, 1.70, 1.75, 1.80, 1.85, and 1.90.

Advantageously MFWD including 4G services may have two or more dedicated antennas for the 4G services forming an antenna diversity arrangement. In those cases not only is good isolation between the antenna system and the antennas for the 4G services required but also good isolation between the two or more antennas forming the antenna diversity arrangement.

One, two or more 4G antennas may be IFA-antennas and they may be located outside of the ground plane rectangle. They may be located next to the ground plane. One, two or more 4G antennas may be slot antennas, preferably within the ground plane.

Typically the number of contacts in an antenna system is proportional to the number of RF transceivers coupled to the antenna system and to the number of antenna elements comprised in the structure of the antenna system. Each RF transceiver drives an antenna element through typically one contact. Additionally each of the antenna elements may have a second contact for grounding purposes. Parasitic antenna elements typically comprise a contact terminal used for grounding purposes.

In some examples, the MFWD integrates an antenna system in such a way that the antenna rectangle of the antenna system is at least partially (such as for instance at least a 10%, 20%, 30%, 40%, 50% or even 60%) or completely on the projection of the ground plane rectangle of said MFWD. In some other examples, the antenna rectangle is completely outside of the projection of the ground plane rectangle of said MFWD.

In other examples in which the antenna rectangle of an antenna system is in the projection of the ground plane rectangle of a MFWD in an area of less than 10%, 20% or 30% of the antenna rectangle, the antenna contour of the antenna system preferably features a complexity factor F_{21} larger than 1.20, 1.30, 1.40 or 1.50. In still other examples in which the antenna rectangle of an antenna system is in the projection of the ground plane rectangle of a MFWD in an area larger than 80%, 90% or 95% of said antenna rectangle, the antenna contour of the antenna system preferably features a complexity factor F_{21} smaller 1.30, 1.35, 1.40 or 1.45.

Another aspect of the integration of an antenna system within a MFWD is the positioning of the antenna system with respect to the one or more bodies comprised in the MFWD.

An antenna system can be integrated either in the top part of the body of a MFWD (usually, above and/or behind a display), or in the bottom part of a body of the MFWD (usually, below and/or behind a keypad).

In some examples, an antenna system integrated within the bottom part of a body of a MFWD features advantageously an antenna contour with a complexity factor F_{21} smaller than 1.45 and a complexity factor F_{32} smaller than 1.50, since generally there is quite a bit more space available in such a part of the device. In some other examples, the antenna contour preferably features a factor F_{21} larger than 1.45 and/or a factor F_{32} larger than 1.75.

In some examples, an antenna system integrated on the top part of the body of a MFWD advantageously features an antenna contour with a complexity factor F_{21} smaller than 1.30, 1.25, or 1.20. In some other examples, the antenna contour preferably features a factor F_{21} larger than 1.45, 1.50 or 1.55.

In some cases, a two-body MFWD (such as for instance a clamshell or a flip-phone, a twist device, or a slider device) integrates the antenna system in the vicinity of the hinge that allows rotation of at least one of the two bodies. In such cases, the antenna contour of the antenna system preferably features a complexity factor F_{21} larger than 1.20 and/or a complexity factor F_{32} larger than or equal to 1.55.

Further of advantage for a general trade off between multiple parameters are values of a complexity factor of F_{21} being more than 1.52 and less than 1.65 and/or a complexity factor F_{32} being more than 1.55 and less than 1.70.

ILLUSTRATION EXAMPLES

Referring now to FIG. **1**B, there is shown a perspective view of a MFWD **100** comprising, in this particular example, only one body. A volume of space **101** within the MFWD **100** is made available for the integration of an antenna system. The MFWD **100** also comprises a multi-layer PCB that includes feeding means and/or grounding means. A layer **102** of the PCB serves as a ground plane of the antenna system.

An antenna box **103** is obtained as a minimum-sized parallelepiped that completely encloses the volume **101**. In this example, the antenna box **103** has rectangular faces **104-109**. According to the present invention as described above, the structure of the antenna system comes into contact with each of the six (6) faces of the antenna box **104-109** in at least one point of each face. Moreover, the antenna system of MFWD **100** has no portion that extends outside the antenna box **103**.

An antenna rectangle **110** is obtained as the orthogonal projection of the antenna box **103** along the normal to the face with largest area, which in this case is the direction normal to faces **104** and **105**.

Referring now to FIG. **2**A, there is shown a top plan view of the MFWD **100**. For the sake of clarity, the volume of space **101** has been omitted in FIG. **2**A. A ground plane rectangle **200** is adjusted around the layer **102** that serves as a ground plane to the antenna system of the MFWD **100**. The ground plane rectangle **200** is the minimum-sized rectangle in which each of its edges is tangent to at least one point of the perimeter of layer **102**.

FIG. **2**B depicts the relative position of the ground plane rectangle **200** and the antenna rectangle **110** for the MFWD **100** of FIG. **1**A. The antenna rectangle **110** has a long side **203** and a short side **204**. The ground plane rectangle **110** has a long edge **202** and a short edge **201**.

In this particular example, the antenna rectangle **110** and the ground plane rectangle **200** lie substantially on a same plane (i.e., the antenna rectangle **110** and the ground plane rectangle **200** are substantially coplanar). Furthermore, a long side **203** of the antenna rectangle **110** is substantially parallel to a short edge **201** of the ground plane rectangle **200**, while in some other embodiments it will be substantially parallel to a long edge **202** of the ground plane rectangle **200**.

In this example, the antenna rectangle **110** is partially overlapping the ground plane rectangle **200**. Although in other cases, they can be completely overlapping or completely non-overlapping. Moreover, in this example the placement of the antenna rectangle **110** is not symmetrical with respect to an axis of symmetry that is parallel to the long edge **202** of the ground plane rectangle **200** and that passes by the middle point of the short edge **201** of said ground plane rectangle **200**. In other words, the antenna rectangle **110** is shifted slightly to the left as seen in this view.

FIG. **3** shows an example of a structure of an antenna system contained within an antenna box **301**. In this particular example, the structure comprises only one antenna element **300**. The antenna element **300** has been shaped to be able to support different radiation modes, in order that the resulting antenna system can operate in multiple frequency bands. In particular, two apertures **302** and **303** with closed perimeters have been created in the antenna element **300**. Additionally, the antenna element **300** also features an opening **304** that increases the number of segments that form the perimeter of the antenna element **300**. The antenna element **300** also includes two parts **305** and **306** that are bent 90° with respect to the rest of the antenna element **300**, but are fully contained in the antenna box **301**.

The bottom part of FIG. **3** shows an antenna rectangle **351** associated with the antenna box **301**. The antenna rectangle **351** contains the antenna contour **350** associated with the antenna element **300**.

The antenna contour **350** comprises three disjointed subsets of segments: (a) a first subset is formed by the segments of the perimeter **357** (which includes both external segments of the antenna element **300** and those segments added to said antenna element by the opening **304**) and the group of segments **356** corresponding to the orthogonal projection of part **306** of the antenna element **300**; (b) a second subset is formed by the segments **352** associated to the perimeter of aperture **302**; and (c) a third subset is formed by the segments **353** associated to the perimeter of aperture **303**.

Note that in this example, part **305** of the antenna element **300** has an orthogonal projection that completely matches a segment of the perimeter **357**, and therefore does not increase the number of segments of the antenna contour **350**.

Referring now to FIG. **4** there is shown how the structure of an antenna system such as the one presented in FIG. **3** can be obtained by appropriately shaping a rectangular conducting plate **400**. The structure in FIG. **4** can be seen to have been formed in three steps (top to down) in a manufacturing process of antenna system by means of, for instance, a stamping process.

The top part of FIG. **4** shows the plate **400** occupying (and extending beyond) the antenna rectangle **351** (represented as a dash-dot line). The cut out lines that delimit those parts of the conducting plate **400** that will be removed are depicted as dashed lines. A peripheral part of the plate **400** will be removed, as indicated by the outline **401**. Additionally, two closed apertures will be created as defined by outline **402** and outline **403**.

The middle part of FIG. **4** shows a planar structure **430** resulting after eliminating the parts of plate **400** that will not be used to create the antenna system. In the planar structure **430**, two closed apertures **302** and **303**, and an opening **304** can be identified.

The planar structure **430** has a first part **405**, and a second part **406**, that extend beyond the antenna rectangle **351**. The first and second parts **405** and **406** are bent or folded so that their orthogonal projection does not extend outside the antenna rectangle **351**.

The bottom part of FIG. **4** shows the antenna element **300** obtained from the planar structure **430**. The antenna element **300** is a three-dimensional structure that fits within the antenna box **301** (also depicted as a dash-dot line). The first part of the planar structure **405** is bent 90 degrees downwards (in the direction indicated by arrow **431**) to become part **305** of the antenna element **300**. The second part of the planar structure **406** is folded twice to become part **306** of said antenna element **300**. The second part **406** is rotated a first time 90 degrees downwards (as indicated by the arrow **432**), and then at another point along the second part **406** rotated a second time 90 degrees leftwards (as indicated by the arrow **433**).

Referring now to FIG. **5**A-B there is shown a MFWD **500** consisting of a single body being typically held by a right-handed user to originate a phone call while facing a display **501** of the MFWD **500**. The MFWD **500** comprises an antenna system and a PCB that includes a layer that serves as a ground plane of the antenna system **502** (depicted in dashed line). The antenna system is arranged inside an antenna box, whose antenna rectangle **503**, **504** is depicted

also in dashed line. The antenna rectangle **503**, **504** is in the projection of the ground plane layer **502**. In the case of FIG. **5**A, the antenna rectangle **503** is placed substantially in the top part of the body of the MFWD **500** (i.e., above and/or behind a display **501**), while in FIG. **5**B the antenna rectangle **504** is placed substantially in the bottom part of the body of the MFWD **500** (i.e., below and/or behind a keypad).

For reasons of ergonomics, it is advantageous in the examples of FIG. **5** to select a corner of the antenna rectangle close to the left edge of the MFWD **500**. The upper left corner of the antenna rectangle **505** is selected as the feeding point corner in the case of FIG. **5**A, while the lower left corner of the antenna rectangle **506** is selected as the feeding point corner in the case of FIG. **5**B. In these two examples the corners designated as feeding point corners **505**, **506** are also substantially close to a short edge of a ground plane rectangle (not depicted in FIG. **5**) that encloses the ground plane layer **502**.

FIG. **5**C illustrates an alternate embodiment of a MFWD **500** having a clamshell-type configuration. The MFWD **500** includes a lower circuit board **522**, an upper circuit board **524**, and an antenna system. The antenna system is arranged inside an antenna box, whose antenna rectangle **523** is depicted also in dashed line. The antenna rectangle **523** is secured to a mounting structure **526**. FIG. **5**C further illustrates an upper housing **528**, a lower housing **530** that join to enclose the circuit boards **522**, **524** and the antenna rectangle **523**. The lower circuit board includes a ground plane **532**, a feeding point **534**, and communications circuitry **536**. The antenna rectangle **523** is secured to a mounting structure **526** and coupled to the lower circuit board **522**. The lower circuit board **522** is then connected to the upper circuit board **524** with a hinge **538**, enabling the lower circuit board **522** and the upper circuit board **524** to be folded together in a manner typical for clamshell-type phones. In some embodiments, the hinge **538** may be adapted to provide rotation of the upper circuit board **524** with respect to the lower circuit board **522** around two or more, preferably non-parallel, axes of rotation, resulting in a MFWD **500** having a twist-type configuration. In order to reduce electromagnetic interference from the circuit boards **522**, **524**, the antenna rectangle **523** is preferably mounted on the lower circuit board **522** adjacent to the hinge **538**.

FIG. **6**A-**6**C represents, respectively examples of a first grid **601**, a second grid **602** and a third grid **603** used for the computation of the complexity factors F_{21} and F_{32} of an antenna contour that fits in an antenna rectangle **600**. The antenna rectangle **600** has a long side **603** and a short side **604**.

In FIG. **6**B, the second grid **602** has been adjusted to the size of the antenna rectangle **600**. The long side of the antenna rectangle **603** is fitted with nine (9) columns of cells of the second grid **602**. As far as the number of rows is concerned, the aspect ratio of the antenna rectangle **600** in this particular example is such that a cell aspect ratio closest to one is obtained when the short side of the antenna rectangle **604** is fitted with five (5) rows of cells of the second grid. Therefore, the antenna rectangle **600** is perfectly tessellated with 9 by 5 cells of the second grid **602**.

FIG. **6**A shows a possible first grid **601** obtained from grouping 2-by-2 cells of the second grid **602**. In this example, the upper left corner of the antenna rectangle **600** is selected as the feeding point corner **605**. A first cell of the first grid **606** is placed such that the cell **606** has a corner designated as the feeding point corner **605** and is completely inside the antenna box **600**. In the example of FIG. **6**A, the antenna rectangle **600** spans five (5) columns and three (3) rows of cells of the first grid **601**.

Since the antenna rectangle **600** is tessellated with an odd number of columns and rows of cells of the second grid. An additional column **608** and an additional row **609** of cells of the second grid **602** are necessary to have enough cells of the first grid **601** to completely cover the antenna rectangle **600**. The additional column **608** and additional row **609** meet at the lower right corner of the antenna rectangle **607** (i.e., the corner opposite to the feeding point corner **605**).

FIG. **6**C shows the third grid **603** obtained from dividing each cell of the second grid **602** into four (4) cells. Each cell of the third grid **603** has a cell width and cell height equal a half of the cell width and cell height of a cell of the second grid **602**. Thus, in this example the antenna rectangle **600** is perfectly tessellated with eighteen (18) columns and ten (10) rows of cells of the third grid **603**.

Referring now to FIG. **7** there is shown a graphical representation of the two-dimensional space **700** defined by the complexity factors F_{21} and F_{32} for an illustrative antenna (not shown). The antenna contour of the illustrative antenna system of a MFWD is represented as a bullet **701** of coordinates (F_{21}, F_{32}) in the two-dimensional space **700**.

FIGS. **8**A-**8**C provide examples to illustrate the complexity factors that feature two radically different antennas: (1) A solid planar rectangular antenna that occupies the entire area of an antenna rectangle **800** for a MFWD (not specifically shown); and (2) an antenna whose contour is inspired in a Hilbert curve **810** that fills the available space within the antenna rectangle **800** (the antenna structure shown in the rectangle **800** of each of FIGS. **8**A-**8**C). These two antenna examples, although not advantageous to provide the multiple frequency band behavior required for the antenna system of a MFWD, help to show the relevance and characteristics of the two complexity factors F_{21} and F_{32}.

FIGS. **8**A-**8**C show antenna **810** inside the antenna rectangle **800** under a first grid **801**, a second grid **802**, and a third grid **803**. In this example, the antenna rectangle **800** is perfectly tessellated with nine (9) columns and five (5) rows of cells of said second grid **802** (FIG. **8***b*). The antenna **810** has a feeding point **811**, located substantially close to the lower left corner of the antenna rectangle **805** (being thus the feeding point corner).

In FIG. **8**A, there are fifteen (15) cells of the first grid **801** at least partially inside the antenna rectangle **800** and that include at least a point of the antenna contour of antenna **810** (i.e., N_1=15). In FIG. **8**B, there are forty-five (45) cells of the second grid **802** completely inside the antenna rectangle **800** and that include at least a point of the antenna contour of the antenna **810** (i.e., N_2=45). Finally in FIG. **8**C, there are one hundred eighty (180) cells of the third grid **803** completely inside the antenna rectangle **800** and that include at least a point of the antenna contour of the antenna **810** (i.e., N_3=180). Therefore, in the present example, an antenna whose contour is inspired in the Hilbert curve **810** shown within the antenna space **800** of FIGS. **8**A-**8**C features F_{21}=1.58 (i.e., smaller than 2.00) and F_{32}=2.00.

On the other hand if the process of counting the cells in each of the three grids is repeated for a planar rectangular antenna whose contour fills the entire rectangular space of the antenna rectangle **800** (not actually shown) then N_1=12, N_2=24 and N_3=52, which results in F_{21}=1.00 and F_{32}=1.12 (i.e., larger than 1.00).

These results illustrate that complexity factor F_{21} is geared more towards discerning if the antenna contour of a particular antenna system distinguishes sufficiently from a simple planar rectangular antenna rather than capturing the

complete intricacy of said antenna contour, while complexity factor F_{32} is predominantly directed towards capturing whether the degree of complexity of the antenna contour approaches to that of a highly-convoluted curve such as a Hilbert curve.

FIGS. **9**A-**9**C and **10**A-**10**C provide two examples illustrating the complexity factors that characterize a quasi-rectangular antenna **910** having a highly convoluted perimeter and a triple branch antenna **1010**, respectively. These two exemplary antennas help to show the relevance of the two complexity factors.

FIGS. **9**A-**9**C show, respectively, the antenna **910** inside an antenna rectangle **900** under a first grid **901**, a second grid **902**, and a third grid **903**. In this example, the antenna rectangle **900** is perfectly tessellated with nine (9) columns and five (5) rows of cells of said second grid **902** (FIG. **9***b*). The antenna **910** has a feeding point **911**, located substantially close to the upper left corner of the antenna rectangle **905** (being thus the feeding point corner).

In FIG. **9**A, there are twelve (12) cells of the first grid **901** at least partially inside the antenna rectangle **900** and that include at least a point of the antenna contour of antenna **910** (i.e., N_1=12). In FIG. **9**B, there are twenty-four (24) cells of the second grid **902** completely inside the antenna rectangle **900** and that include at least a point of the antenna contour of the antenna **910** (i.e., N_2=24). Finally in FIG. **9**C, there are ninety-six (96) cells of the third grid **903** completely inside the antenna rectangle **900** and that include at least a point of the antenna contour of the antenna **910** (i.e., N_3=96). Therefore, in the present example, a quasi-rectangular antenna **910** having a highly convoluted perimeter features F_{21}=1.00 and F_{32}=2.00. This antenna example appears on a coarse scale (as probed e.g. by a long wavelength resonance) quite similar to a simple planar rectangular antenna which is also shown by F_{21} being very low. On the other hand the edge is highly convoluted which will have influence on small wavelength resonances. This feature is characterized by a high value of F_{32}.

FIGS. **10**A-C show, respectively, antenna **1010** inside the antenna rectangle **1000** under a first grid **1001**, a second grid **1002**, and a third grid **1003**. In this example, the antenna rectangle **1000** is perfectly tessellated with nine (9) columns and five (5) rows of cells of said second grid **1002** (FIG. **10***b*). The antenna **1010** has a feeding point **1011**, located substantially close to the bottom left corner of the antenna rectangle **1005** (being thus the feeding point corner).

As for the antenna **1010** as shown in FIG. **10**A, there are ten (10) cells of the first grid **1001** at least partially inside the antenna rectangle **1000** and that include at least a point of the antenna contour of antenna **1010** (i.e., N_1=10). In FIG. **10**B, there are thirty-four (34) cells of the second grid **1002** completely inside the antenna rectangle **1000** and that include at least a point of the antenna contour of the antenna **1010** (i.e., N_2=34). Finally in FIG. **10**C, there are seventy (70) cells of the third grid **1003** completely inside the antenna rectangle **1000** and that include at least a point of the antenna contour of the antenna **1010** (i.e., N_3=70). Therefore, in the present example, a triple branch antenna, similar to an asymmetric fork, features F_{21}=1.77 and F_{32}=1.04. In this fork example the antenna is not miniaturized since the three branches are essentially straight. This configuration corresponds to a low value of F_{32}. The fork, however is substantially different from a rectangle in that the three branches can be identified clearly and performance of the calculations in accordance with the principles of the invention yields a high value of F_{21}.

FIG. **11** is a graphical presentation that maps the values of the complexity factors F_{21} and F_{32} of the exemplary antennas of FIGS. **6**, **8**, **9**, and **10**. In FIG. **11** the horizontal axis represents increasing values of F_{21} while the vertical axis represents increasing values of F_{32}. The exemplary simple planar, rectangular antenna discussed above in connection with FIG. **6**, occupies the entire area of an antenna rectangle **800** and is characterized by a pair of complexity factors F_{21}=1.00 and F_{32}=1.12 that are mapped as bullet **1102** in FIG. **11**. The complexity factors for the antenna whose contour is discussed above in connection with FIG. **8**, and that is inspired in a Hilbert curve **810** are F_{21}=1.58 and F_{32}=2.00 and is mapped onto FIG. **11** as bullet **1101**. The quasi-rectangular antenna, discussed above in connection with FIG. **9**, and having a highly convoluted perimeter of **910** is characterized by complexity factors F_{21}=1.00 and F_{32}=2.00 and is mapped onto FIG. **11** as bullet **1103**. Bullet **1104** represents the pair of complexity factors F_{21}=1.77 and F_{32}=1.04 for the exemplary triple branch antenna **1010** discussed above in connection with FIG. **10**. These antenna examples help to show the value and antenna characteristics represented by the two complexity factors. F_{21} and F_{32} Further, FIG. **11** and the bullets **1001**-**1004** illustrate how a two dimensional graphical space **700** might be used for antenna system design.

Referring to FIG. **11** and the bullet **1102** in connection with the configuration and performance characteristics of the sample planar rectangular antenna of FIG. **6** it can be seen that such an antenna has a relatively low level of complexity on both a gross as well as a finer level of detail. Thus, while the antenna is relatively large and resonant at a relatively low frequency, it is less likely to provide multiple frequencies of resonance for multiband performance. As one moves up along the vertical axis toward bullet **1103** in connection with the configuration and performance characteristics of the generally rectangular antenna with a convoluted space-filling perimeter of FIG. **9**, it can be seen that while the complexity of the antenna remains low at a gross level of detail, the complexity increases at a finer level of detail. This, in turn, enhances the miniaturization of the antenna to some degree and causes the antenna to resonate at lower harmonic frequencies and behave as a larger antenna than it actually is even though this may not be enough of a change to render the antenna suitable for successful use.

If one now moves from the origin of the graph of FIG. **11** along the horizontal axis toward bullet **1104** in connection with the configuration and performance characteristics of the forked antenna of FIG. **10** we see that the antenna has a relatively high level of complexity on a gross level of detail but a low level of complexity at a finer level of detail. These characteristics tend to enrich the frequency of resonance and, thus, its, multiband capabilities as well as, in some respects, its miniaturization. Finally, in moving toward bullet **1101** of FIG. **11** in connection with the configuration and performance characteristics of the antenna discussed above in connection with FIG. **8**, we see that the antenna is highly complex on both gross and fine levels of detail. This produces an antenna with a high degree of miniaturization which tends to penalize the bandwidth of the antenna and render it less than ideal for antenna performance.

An antenna designer can see that the complexity factors F_{21} and F_{32}, as represented and characterized by the antennas on FIGS. **6**, **8**, **9** and **10** and the illustrated graph of FIG. **11** are very useful tools for modern antenna design for MFWD and similar devices. Use of these tools in accor-

dance with the invention yields antenna designs, as well as MFWD devices having antennas, with enhanced performance characteristics.

FIG. **12**A shows a top-plan view of one illustrated embodiment of the structure **1200** of an antenna system for a MFWD according to the present invention. The antenna rectangle **1210** is depicted as a dashed line. The structure **1200** has been shaped to attain the desired multiple frequency band operation as well as desired RF performance. In particular, peripheral parts of a substantially flat conducting plate have been removed, and slots **1230-1233** have been created within the structure **1200**. Slot **1232** divides the structure **1200** into two antenna elements **1201** and **1202**. Antenna element **1201** and antenna element **1202** are not in direct contact, although the two antenna elements **1201** and **1202** are in contact through the ground plane of the MFWD.

The resulting structure **1200** supports different radiation modes so as to operate in accordance with two mobile communication standards: GSM and UMTS. More specifically it operates in accordance with the GSM standard in the 900 MHz band (completely within the 810 MHz-960 MHz region of the spectrum), in the 1800 MHz band (completely within the 1710 MHz-1990 MHz region of the spectrum), and in the 1900 MHz band (also completely within the 1710 MHz-1990 MHz region of the spectrum). The UMTS standard makes use of a band completely within the 1900 MHz-2170 MHz region of the radio spectrum. Therefore, the antenna system operates in four (4) separate frequency bands within three (3) separate regions of the electromagnetic spectrum.

In the example of FIG. **12**A, the MFWD comprises four (4) contact terminals to couple the structure of said antenna system **1200** with feeding means and grounding means included on a PCB of said MFWD. In FIG. **12**A, the antenna element **1201** includes a feeding point **1204** and a grounding point **1203**, while the antenna element **1202** includes another feeding point **1205** and a grounding point **1206**.

The feeding point **1204** is responsible for the operation of the antenna system in its lowest frequency band (i.e., in accordance with the 900 MHz band of the GSM standard). Therefore, the lower left corner of the antenna rectangle **1211** is chosen to be the feeding point corner.

FIG. **12**B shows the position of the antenna rectangle relative to the PCB that includes the layer **1220** that serves as a ground plane of the antenna system. The layer **1220** is confined in a minimum-sized rectangle **1221** (depicted in dash-dot line), defining the ground plane rectangle for the MFWD. In this example, the antenna rectangle **1210** is placed substantially in the bottom part of the PCB of said MFWD. Moreover, the antenna rectangle **1210** is substantially parallel to the ground plane rectangle **1221**. The antenna rectangle **1210** in this example is completely located in the projection of the ground plane rectangle **1221**; however, the antenna rectangle **1210** is not completely on the projection of the ground plane layer **1220** that serves as a ground plane.

A long side of the antenna rectangle **1210** is substantially parallel to a short edge of the ground plane rectangle. The feeding corner **1211** is near a corner of the ground plane rectangle, providing advantageously a longer path to the electric and/or equivalent magnetic currents flowing on the ground plane layer **1220** to potentially enhance the RF performance of the antenna system or the RF performance of the MFWD in at least a lowest frequency band.

The antenna contour of the structure of antenna system **1200** of the example in FIG. **12**A is formed by the combination of two disjoint subsets of segments. A first subset is given by the perimeter of the antenna element **1201** and comprises forty-eight (48) segments. A second subset is given by the perimeter of the antenna element **1202** and comprises twenty-six (26) segments. Additionally, all these segments are shorter than at least one tenth of a free-space wavelength corresponding to the lowest frequency band of operation of said antenna system.

Moreover, the length of the antenna contour of the structure **1200** is more than six (6) times larger than the length of a diagonal of the antenna rectangle **1210** in which said antenna contour is confined.

In FIGS. **13**A-**13**B, the antenna contour of the structure of the antenna system **1200** is placed under a first grid **1301**, a second grid **1302**, and a third grid **1303** for the computation of the complexity factors of said structure **1200**.

The antenna rectangle **1210** has been fitted with nine (9) columns and five (5) rows of cells of said second grid **1302** (in FIG. **13**B), as the aspect ratio of the antenna rectangle **1210** is such that fitting five (5) rows of cells in the short side of the antenna rectangle **1210** produces a cell of the second grid **1302** with an aspect ratio closest to one.

In FIG. **13**A, there are thirteen (13) cells of the first grid **1301** that, while being at least partially inside the antenna rectangle **1210** and including at least a point of the antenna contour of the structure **1200** (i.e., $N_1=13$).

In FIG. **13**B, there are thirty-eight (38) cells of the second grid **1302** completely inside the antenna rectangle **1210** and that include at least a point of the antenna contour of the structure **1200** (i.e., $N_2=38$).

Finally in FIG. **13**C, there are one hundred and fourteen (114) cells of the third grid **1303** completely inside the antenna rectangle **1210** and that include at least a point of the antenna contour of the structure **1200** (i.e., $N_3=114$).

The complexity factor F_{21} for the antenna shown in FIGS. **12**A, **13**A and **13**B is computed as

$$F_{21} = -\frac{\log(38) - \log(13)}{\log\left(\frac{1}{2}\right)} = 1.55$$

while the complexity factor F_{32} is obtained as

$$F_{32} = -\frac{\log(114) - \log(38)}{\log\left(\frac{1}{2}\right)} = 1.58$$

Therefore, the exemplary structure of antenna system for a MFWD **1200** shown in **12**A, **13**A and **13**B is characterized advantageously by complexity factors $F_{21}=1.55$ and $F_{32}=1.58$.

FIGS. **14**A-**14**C show, respectively, another exemplary antenna **1410** inside the antenna rectangle **1400** under a first grid **1401**, a second grid **1402**, and a third grid **1403** for the computation of the complexity factors of the antenna **1410**. In this example, the antenna rectangle **1400** may be tessellated with nine (9) columns and five (5) rows of cells of the second grid **1402** (FIG. **14**B) as well as with nine (9) columns and seven (7) rows of cells of said second grid (not depicted) since in both cases the aspect ratio is at its closest to one. A second grid **1402** with nine (9) columns and five (5) rows of cells has been selected since the aspect ratio for grid **1402** is bigger than 1. The antenna **1410** has a feeding point **1411**, located substantially close to the bottom left corner of the antenna rectangle **1405** (being thus the feeding point corner).

In FIG. **14**A, there are fifteen (15) cells of the first grid **1401** that, while being at least partially inside the antenna rectangle **1400** and that include at least a point of the antenna contour **1410** (i.e., N_1=15). It should be noted that the cells have been shaded forming the group of cells **1412** to add clarity to the discussion contained herein.

In FIG. **14**B, there are forty-two (42) cells of the second grid **1402** completely inside the antenna rectangle **1400** and that include at least a point of the antenna contour **1410** (i.e., N_2=42). These cells are shaded forming the group of cells **1413** for clarity as set forth above.

Finally in FIG. **14**C, there are one hundred and forty-two (142) cells of the third grid **1403** completely inside the antenna rectangle **1400** and that include at least a point of the antenna contour of the structure **1410** (i.e., N_3=142). These cells are shaded forming the group of cells **1414** for clarity as set forth above.

The complexity factor F_{21} is for the antenna shown in FIGS. **14**A-**14**C computed as

$$F_{21} = -\frac{\log(42) - \log(15)}{\log\left(\frac{1}{2}\right)} = 1.49$$

while the complexity factor F_{32} is obtained as

$$F_{32} = -\frac{\log(142) - \log(42)}{\log\left(\frac{1}{2}\right)} = 1.76$$

Therefore, the example antenna **1410** for a MFWD features advantageously complexity factors F_{21}=1.49 and F_{32}=1.76.

The antenna complexity contour of the antenna structure **1200**, FIGS. **12**A, **13**A and **13**B is mapped in the graphical representation of FIG. **15** as a bullet **1501** with coordinates (F_{21}=1.55 or F_{32}=1.58). The antenna **1410** of FIGS. **14**A-**14**C is mapped on the graph of FIG. **15** as a bullet **1502** with coordinates (F_{21}=1.49 or F_{32}=1.76). Those two examples show cases where intermediate values of F_{21} and F_{32} are used. For intermediate values the value of F_{21} of the structure **1200** is relatively high and in case of the structure **1400** the value of F_{32} is relatively high.

Referring now to FIGS. **16**-**19**, there is shown one example of optimizing the geometry of an antenna system to obtain a superior performance for MFWDs. In that sense, complexity factors F_{21} and F_{32}, as described above, are useful in guiding the optimization process of the structure of an antenna system to reach a target region of the (F_{21}, F_{32}) plane, as it is depicted in the flowchart **1600** in FIG. **16**.

In one embodiment, the process to design an antenna system starts with a set of specifications **1601**. A set of specifications includes a list of heterogeneous requirements that relate to mechanical and/or functional aspects of said antenna system. A typical set of specifications may comprise:

Dimensional information of the MFWD, and more particularly of the space available within the MFWD for the integration of an antenna system (data necessary to define the antenna box and the antenna rectangle) and of the ground-plane of the MFWD (data necessary to define the ground plane rectangle).

Communication standards operated by the MFWD, and some requirements on RF performance of the antenna system (such as for example, and without limitation, input impedance level, impedance bandwidth, gain, efficiency, and/or radiation pattern) and/or RF performance of the MFWD (such as for example, and without limitation, radiated power, received power and/or sensitivity).

Information on the functionality envisioned for a given MFWD (i.e., MMT, SMRT, or both), number of bodies the MFWD comprises (for instance whether the MFWD features a bar, clamshell, flip, slider or twist structure), and presence of other electronic modules and/or subsystems in the vicinity of the antenna box, or even (at least partially) within the antenna box.

As described above, an aspect of the present invention is the relation between functional properties of an antenna system of a MFWD and the geometry of the structure of the antenna system. According to the present invention, a set of specifications for an antenna system can be translated into a certain level of geometrical complexity of the antenna contour associated to the structure of said antenna system, which is advantageously parameterized by means of factors F_{21} and F_{32} described above.

Therefore, once a set of specifications has been compiled, one embodiment of the design method of the present invention translates the set of specifications into a target region of the (F_{21}, F_{32}) plane **1602**. In some examples, the target region is defined by a minimum and/or a maximum value of factor F_{21} (denoted by F_{21}^{min} and F_{21}^{max} in FIG. **16**), and/or a minimum and/or a maximum value of factor F_{32} (denoted by F_{21}^{min} F_{21}^{max} in FIG. **16**).

It will then be advantageous in order to benefit from a superior RF performance of the antenna system and/or a superior RF performance of the MFWD to shape the structure of the antenna system so that its antenna contour features complexity factors within the target region of the (F_{21}, F_{32}) plane.

Starting from an initial structure of an antenna system **1603**, whose antenna contour features complexity factors $F21^0$ and $F32^0$), most likely outside the target region of the (F_{21}, F_{32}) plane, an antenna system designer may need to gradually modify the structure of antenna system **1605** (such as, for instance, creating slots, apertures and/or openings within said structure; or bending and/or folding said structure) to adjust the complexity factors of its antenna contour. This process can be performed in an iterative way, verifying after each step whether factors $F21^1$ and $F31^2$ are within the target region of the (F_{21}, F_{32}) plane **1604**. Depending on the current values of the complexity factors after step "i" of this iterative process, an antenna system designer can apply changes to the structure of the antenna system at step "i+1" to correct the value of one, or both, complexity factors in a particular direction of the (F_{21}, F_{32}) plane.

The design process ends **1606** when a structure of the antenna system has an antenna contour featuring complexity factors within the target region of the (F_{21}, F_{32}) plane (denoted by F_{21}* and F_{32}* in FIG. **16**).

In further illustration of the above, an example of designing an antenna system of a MFWD can be illustrated by reference to one process to obtain the antenna system of FIG. **12***a*.

In this particular example, the MFWD is intended to provide advanced functionality typical of a MMT device and/or a SMRT device. The MFWD must operate two mobile communication standards: GSM and UMTS. More specifically it operates the GSM standard in the 900 MHz band (completely within the 810 MHz-960 MHz region of the spectrum), in the 1800 MHz band (completely within the

1710 MHz 1990 MHz region of the spectrum), and in the 1900 MHz band (also completely within the 1710 MHz-1990 MHz region of the spectrum). The UMTS standard makes use of a band completely within the 1900 MHz-2170 MHz region of the spectrum. The MFWD comprises one RF transceiver to operate each mobile communication standard (i.e., two RF transceivers).

The MFWD has a bar-type form factor, comprising a single PCB. The PCB includes a ground plane layer **1220**, whose shape is depicted in FIG. **12**B. The antenna system is to be integrated in the bottom part of the PCB, such integration being complicated by the presence of a bus connector and a microphone module.

In this example the ground plane rectangle **1221** is approximately 100 mm×43 mm. The antenna rectangle **1210** has a long side approximately equal to the short side of the ground plane rectangle **1221**, and a short side approximately equal to one fourth of the long side of the ground plane rectangle **1221**. Also in this example, the space provided within the MFWD for the integration of said antenna system allows placing parts of the structure of the antenna system at a maximum distance of approximately 6 mm above the ground plane layer **1220**.

Furthermore, there are additional functional requirements in terms of impedance, VSWR and efficiency levels in each frequency band, and requirements on the mechanical structure of the antenna system and materials to be used. These requirements are listed in Table 1 below.

TABLE 1

		TARGET			
Parameter	Condition	Minimum	Typical	Maximum	Unit
Impedance			50		Ohm
Frequency Bands	GSM900	800		960	MHz
	GSM1800	1710		1880	
	GSM1900	1850		1990	
	UMTS	1920		2170	
VSWR	GSM900			3.5:1	
	GSM1800			3.0:1	
	GSM1900			3.0:1	
	UMTS			2.5:1	
Efficiency	GSM900	20			%
	GSM1800	30			
	GSM1900	30			
	UMTS	30			
Antenna System Structure	Type	Patch, PIFA, Monopole, IFA . . .			
				3	
			2		
				3	
Antenna System Materials	Radiator	Bronze, brass, stainless steel, nickel-silver . . . (Thickness: 0.1, 0.15, 0.2, 0.3, 0.4, or 0.5 mm			
	Plating	Nickel, gold . . . (Thickness: between 0.1 and 10 microns)			
	Carrier	ABS, PC-ABS, POM, LCP			
	Assembly	Clips, screws, adhesive, heat-stakes . . .			

The PCB area required by other electronic modules carried by the MFWD makes it difficult to remove any additional portions of the ground plane layer **1220** underneath the antenna system. Since substantial overlapping of the antenna rectangle **1210** and the ground plane rectangle **1221** occurs, a patch antenna solution is preferred for the MFWD of this example.

In order to take full advantage of the dimensions of the ground plane layer **1220** to potentially enhance the RF performance of the antenna system or the RF performance of the MFWD in at least a lowest frequency band, a feeding point of the antenna system will be placed substantially close to the bottom left corner of the ground plane layer **1220**, so that a longer path is offered to the electric and/or equivalent magnetic currents flowing on said ground plane layer **1220**. Therefore, the bottom left corner of the antenna rectangle **1211** is selected to be the feeding corner.

The antenna rectangle **1210** is then fitted with nine (9) columns and five (5) rows of cells of a second grid **1302** (in FIG. **13**B), as the aspect ratio of the antenna rectangle **1210** is such that fitting five (5) rows of cells in the short side of the antenna rectangle **1210** produces a cell of the second grid **1302** with an aspect ratio closest to one.

Once a set of mechanical and/or functional specifications has been compiled, they are translated into a level of geometrical complexity that the antenna contour associated to the structure of an antenna system needs to attain.

For those antennas in which their physical properties come quite close to patch antennas, a value of F_{21} being higher than 1.45, 1.47, 1.50, or 1.60 turns out to be a good measure for an expected improved bandwidth or gain with respect to a patch antenna without any complexity in at least one of the frequency bands. In the example of FIG. **12**, a value of F_{21} higher than 1.50 is preferred.

For a SMRT or MMT device a value of F_{32} being larger than 1.50, 1.52, 1.55 or 1.60 is desirable. The phones which usually operate in high frequency bands such as UMTS and/or a wireless connectivity of around 2.4 GHz a higher value of F_{32} can be used to appropriately adapt the antenna to a desired resonance frequency and/or bandwidth in those bands. In the example of FIG. **12**, a value of F_{32} higher than 1.55 is preferred.

Moreover, for MFWDs which have e.g. a camera or any other item such as a connector integrated in the antenna box, it is desirable to have a value of F_{32} being larger than 1.56, 1.58, 1.60 or 1.63. Therefore, since in the example of FIG. **12** a connector and a microphone module are to be integrated in the antenna box alongside the antenna system, it is preferred to further increase the value of F_{32} to make it higher than 1.56.

In conclusion, it will be advantageous to shape the structure of the antenna **35** system in such a way that its antenna contour features complexity factor F_{21} higher than 1.50 and F_{32} higher than 1.56, thus defining a target region **1800** in the upper right part of the (F_{21}, F_{32}) plane in FIG. **18**.

Referring now to FIG. **17**, there is shown the progressive modification of the antenna contour as the structure of the antenna system through the different steps of the optimization process. As indicated by the designer of the MFWD, a feeding point to couple the RF transceiver that operates the GSM communication standard should be preferably located at point **1722**, while a feeding point to couple the RF transceiver that operates the UMTS communication standard should be preferably located at point **1724**. Furthermore, grounding points should be preferably located at points **1721** and **1723**.

Table 2 lists for each step the number of cells of the first, second and third grids considered for the computation of the complexity factors of the antenna contour, 15 and the values of said complexity factors F_{21}, F_{32}.

TABLE 2

Step	Cells Counted in First Grid (N_1)	Cells Counted in Second Grid (N_2)	Cells counted in Third Grid (N_3)	Complexity Factor F_{21}	Complexity Factor F_{32}
0	12	24	52	1.00	1.12
1	15	31	82	1.05	1.40
2	13	31	82	1.25	1.40
3	13	37	103	1.51	1.48
4	13	38	113	1.55	1.57
5	13	36	103	1.47	1.52
6	13	38	110	1.55	1.53
7	13	38	114	1.55	1.58

As a starting point (step 0), the structure of the antenna system is simply a rectangular plate **1701** occupying the entire antenna rectangle **1210** and placed at the maximum distance allowed above the ground plane layer **1220** (see FIG. **17***a*). In this case the antenna contour is equal to the antenna rectangle **1210**, and features complexity factors F_{21}=1.00 and F_{32}=1.12 (represented as point **1801** in FIG. **18**), obviously outside the target region **1800**.

In the first iteration (step 1), a slot **1702** is practiced in the rectangular plate **1701**, dividing said plate **1701** into two separate geometric elements: a larger antenna element **1711** and a smaller antenna element **1712**, as shown in FIG. **17***b*. The larger antenna element **1711** will be coupled to the RF transceiver that operates the GSM communication standard, while the smaller antenna element **1712** will be coupled to the RF transceiver that operates the UMTS communication standard.

The slot **1702** increases the geometrical complexity of the antenna contour, mainly along the F_{32} axis, mapping as point **1802** with coordinates F_{21}=1.05 and F_{32}=1.40 on the (F_{21}, F_{32}) plane.

In order to offer a longer path to the electrical currents flowing on the antenna element **1711**, particularly those currents responsible for a radiation mode associated to the lowest frequency band of said antenna system, the next iteration step (step 2) is initiated. An upper right portion of the antenna element **1711** is removed creating an opening **1703** (FIG. **17**C). As it can be seen in Table 2, the effect sought when creating opening **1703** in the structure of the antenna system is directed towards enhancing the coarse complexity of the antenna contour (F_{21} increases from 1.05 to 1.25), while leaving its finer complexity unchanged. This modification accounts in FIG. **18** for the jump from point **1802** to **1803**, still far from the target region **1800**. A fringe benefit of creating the opening **1703** in the structure of the antenna system is that additional space within the MFWD, and in particular within the antenna box, is made available for the integration of other functional modules.

In the next iteration (step 3) a second slot is introduced in the structure of the antenna system (FIG. **17**D). Slot **1704** is practiced in antenna element **1711** with the main purpose of creating different paths for the currents flowing on said antenna element, so that it can support several radiation modes. The slot **1704** intersects the perimeter of the antenna element **1711** and has two closed ends: a first end **1730** near the left side of the antenna rectangle, and a second end **1731**. As a result, the antenna element **1711** comprises a first arm **1732**, a second arm **1733**, and a third arm **1734**.

From Table 2 it can be seen that the complexity factor F_{21} has been augmented to 1.51 in recognition of the improvement in the multiple frequency band and/or multiple radiation mode behavior of the structure shown in FIG. **17**D. The convoluted shape of slot **1704** contributes also to an increase of complexity factor F_{32}, reaching the value of 1.48.

After step 3, the antenna contour corresponds to point **1804** on the (F_{21}, F_{32}) plane of FIG. **18**. It can be noticed that while F_{21} is already above the minimum value of 1.50, F_{32} has not reached the minimum value of 1.56 yet.

In order to increase the value of F_{32} (step 4), three small slots **1705**, **1706**, **1707**, are created in the structure of the antenna system, in particular in the antenna element **1711** (see FIG. **17**E). Slots **1706** and **1707** are connected to slot **1702**, introduced in the structure to separate the larger antenna element **1711** from the 15 smaller antenna element **1712**. The slots **1705**, **1706**, **1707** are effective in providing a more winding path for the electrical currents flowing on the arms of antenna element **1711**, hence increasing the degree of miniaturization of the resulting antenna system.

At this stage the antenna contour features complexity factors F_{21}=1.55 and F_{32}=1.57 and maps into point **1805** on the (F_{21}, F_{32}) plane of FIG. **18**, clearly within the target region **1800**.

However, the design in FIG. **17**E is to be modified for mechanical reasons (step 5). A portion in the lower left corner of antenna element **1711** is to be removed (creating the opening **1708**) in order for the antenna system to fit in its housing in the body of the MFVVD. Moreover in order to accommodate a connector and a microphone module, portion **1740** on the right side of the antenna element **1712** needs to be shortened and then bent 90 degrees downwards (i.e. towards the ground plane layer **1220**) forming a capacitive load. Such a modification results in opening **1709**.

Unfortunately, the changes introduced in step 5 lead to an antenna system whose antenna contour is no longer within the target region of the (F_{21}, F_{32}) plane **1800**: F_{21} has dropped to 1.47 (i.e., below 1.50) and F_{32} to 1.52 (i.e., below 1.56), which corresponds to point **1806**.

The detuning of the antenna system in its upper frequency band due mostly to the reduction in size of antenna element **1712** can be readily corrected by creating a slot **1760** in said antenna element **1712** (step 6), to increase the electrical length of said antenna element. With this modification, the antenna contour of FIG. **17**G has fully restored the value of F_{21} to 1.55, and partially that of F_{32} (point **1807** in FIG. **18**).

A final fine-tuning of the structure of the antenna system is performed at step 7 (FIG. **17**H) aimed at restoring the level of F_{32} to be within the target region **1800**, in which small indentations **1770**, **1771**, **1772**, **1773**, **1774** are created in the proximity of the feeding points **1722**, **1724** and grounding points **1721**, **1723** of the antenna system. The final design of the antenna system has a structure whose antenna contour features F_{21}=1.55 and F_{32}=1.58 (represented as point **1808** in FIG. **18**), well within the target region of the (F_{21}, F_{32}) plane **1800**.

The typical performance of the antenna system of FIG. **12***a* (or FIG. **17***h*) is presented in FIG. **19**.

Referring specifically to FIG. **19**A, there is shown the VSWR of the antenna system referred to an impedance of 50 Ohms as a function of the frequency. Solid curve **1901** represents the VSWR of antenna element **1711** (i.e., the antenna element coupled to the RF transceiver that operates the GSM communication standard), while dashed curve **1902** represents the VSWR of antenna element **1712** (i.e., the antenna element coupled to the RF transceiver that operates the UMTS communication standard). The shaded regions **1903** and **1904** correspond to the mask of maximum VSWR allowed constructed from the functional specifications provided in Table 1. As it can be observed in FIG. **19**A, the VSWR curves **1901**, **1902** are below the mask **1903**,

1904 for all frequencies within the frequency bands of operation of the antenna system.

FIG. 19B shows the efficiency of the antenna system as a function of the frequency. Curve **1951** represents the efficiency of antenna element **1711** in the 900 MHz band of the GSM standard; curve **1952** represents the efficiency of antenna element **1711** in the 1800 MHz and 1900 MHz bands of the GSM standard; and curve **1953** represents the efficiency of antenna, element **1712** in the frequency band of the UMTS standard. The dashed regions **1954** and **1955** correspond to the mask of minimum efficiency required constructed from the functional specifications provided in Table 1. As it can be observed in FIG. **19***b*, the efficiency curves **1951**, **1952**, **1953** are above the mask **1954**, **1955** for all frequencies within the frequency bands of operation of the antenna system.

FIGS. **20**A-**20**F illustrate cross-sectional views of exemplary MFWDs comprising three bodies in which at least one body is rotated with respect to another body around two parallel axes.

FIGS. **20**A-B illustrate a MFWD **2000** comprising a first body **2001**, a second body **2002**, and a third body **2003**. A first connecting means **2004**, such as, for example, a hinge, connects the first body **2001** to the third body **2003** and provides rotation of the first body **2001** around a first axis. A second connecting means **2005** connects the second body **2002** to the third body **2003** and provides rotation of the second body **2002** around a second axis. The first and second axes of rotation are parallel to each other and each of the axes is perpendicular to the cross-sectional plane of the figure. In this particular example, the third body **2003** is substantially smaller in size than the first and second bodies **2001**, **2002** of the MFWD **2000**.

FIG. **20**A illustrates the three bodies **2001**, **2002**, **2003** of the MFWD **2000** in a closed (or folded) state. The dashed lines indicate the position occupied by the centers of the first body **2001** and that of the second body **2002** when they are in the closed state.

FIG. **20**B illustrates the MFWD **2000** in a partially extended state. The first body **2001** and the second body **2002** are displaced with respect to a position they occupy in the closed state. The possible directions of rotation of the first body **2001** and the second body **2002** are indicated by the arrows.

FIGS. **20**C-**20**D illustrate a MFWD **2030** comprising a first body **2031**, a second body **2032**, and a third body **2033**. The MFWD **2030** further comprises a first connecting means **2034** connecting the first body **2031** to the third body **2033** and provides rotation of the first body **2031** around a first axis. The MFWD **2030** further comprises a second connecting means **2035** connecting the second body **2032** to the third body **2033** and provides rotation of the second body **2032** around a second axis. As shown in FIGS. **20**A-**20**B, the first and second axes of rotation are parallel to each other.

In this particular example, the third body **2033** is substantially larger than the first and second bodies **2031**, **2032** of the MFWD **2030**, allowing the first body **2031** and the second body **2032** to be folded on top of the third body **2033** (and more generally on a same side of the third body **2033**) when the MFWD **2030** is in its closed state, as illustrated in FIG. **20**C. In some cases, the first body **2031** and the second body **2032** will be substantially equal in size, while in other cases, the first body **2031** and the second body **2032** will have substantially different dimensions.

FIG. **20**D illustrates the MFWF **2030** in a partially extended state. In the partially extended state, the first body **2031** is rotated around the first rotation axis provided by the first connecting means **2034**, while the second body **2032** is rotated around the second rotation axis provided by the second connecting means **2035**.

A third example of a MFWD is presented in FIG. **20**E-F, in which the MFWD **2060** comprises a first body **2061**, a second body **2062**, and a third body **2063**. According to this example, the first, second, and third bodies **2061**, **2062**, **2063** can be selectively folded and unfolded by means of a first connecting means **2064** and a second connecting means **2065**.

FIG. **20**E illustrates the MFWD **2060** in a closed state. In this example, the first body **2061** is located on top of the third body **2063** while the second body **2062** is located below the third body **2063** (and more generally on an opposite side of the third body **2063**).

The MFWD **2060** can be extended to its maximum size state by rotating the first body **2061** around a first rotation axis provided by the first connecting means **2064** and rotating the second body **2062** around a first rotation axis provided by the second connecting means **2065**. FIG. **20**F represents the MFWD **2060** in a partially extended state. The directions of rotation of the first body **2061** and the second body **2062** are indicated by means of the arrows shown in FIG. **20**F.

As can be seen from the various examples and explanations above the use of the complexity factor F_{21} and F_{32} in accordance with the principles of the present invention are very useful in the design of MFWD devices and, in particular, multiband antennas for such devices. The choice of certain complexity factor ranges to optimize both the miniaturization of the antenna as well as the multiband and RF performance characteristics, all in accordance with the principles of the invention, should be clear to one of ordinary skill in the art from the above explanations.

The previous Detailed Description is of embodiment(s) of the invention. The scope of the invention should not necessarily be limited by this Description. The scope of the invention is instead defined by the following claims and the equivalents thereof.

What is claimed is:

1. A wireless device comprising:

a ground plane;

a first planar antenna proximate to a first side of a ground plane rectangle enclosing the ground plane, the first planar antenna being configured to support at least three frequency bands of the electromagnetic spectrum, the first planar antenna defining a first contour, wherein the first contour has a level of complexity defined by complexity factor F_{21} having a value of at least 1.20 and complexity factor F_{32} having a value of at least 1.35; and

a second antenna proximate to a second side of the ground plane rectangle, wherein the second antenna is configured to receive signals from at least two frequency bands of the at least three frequency bands;

wherein the first contour is defined as a perimeter of the first planar antenna and perimeters of any closed apertures defined within the first planar antenna;

wherein the complexity factors F_{21} and F_{32} are given by:

$$F_{21} = -\frac{\log(N_2) - \log(N_1)}{\log(1/2)}$$

-continued

$$F_{32} = -\frac{\log(N_3) - \log(N_2)}{\log(1/2)}$$

where N_1 is a number of cells of a grid G_1 that include at least a point of the first contour, N_2 is a number of cells of a grid G_2 that include at least a point of the first contour, and N_3 is a number of cells of a grid G_3 that include at least a point of the first contour,

the grid G_2 divides a minimum-sized rectangle enclosing the first planar antenna into nine columns of equal width arranged along a long side of the minimum-sized rectangle and into an odd number of rows of equal height arranged along a short side of the minimum-sized rectangle, wherein the number of rows results in the cells of grid G_2 being as square as possible,

the grid G_1 being aligned with a corner of the grid G_2 to cover the minimum-sized rectangle, the cells of the grid G_1 having widths and heights that respectively are double the widths and heights of the cells of the grid G_2, and

the grid G_3 being aligned with the grid G_2, the cells of the grid G_3 having widths and heights that respectively are half the widths and heights of the cells of the grid G_2, and

wherein the level of complexity of the first contour is configured to provide operation of the wireless device in the at least three frequency bands.

2. The wireless device of claim **1**, wherein the first planar antenna includes at least two antenna elements that are electromagnetically coupled.

3. The wireless device of claim **1**, wherein the first side of the ground plane rectangle is a short side of the ground plane rectangle.

4. The wireless device of claim **1**, wherein the second side of the ground plane rectangle is a long side of the ground plane rectangle.

5. The wireless device of claim **1**, wherein the complexity factor F_{32} for the first contour is smaller than 1.75.

6. The wireless device of claim **5**, comprising a third antenna configured to operate in at least two frequency bands that are different from the at least three frequency bands.

7. A wireless device comprising:

a ground plane;

a first non-planar antenna proximate to a first side of a ground plane rectangle enclosing the ground plane, the first non-planar antenna being configured to support at least three frequency bands of the electromagnetic spectrum, a minimum-sized parallelepiped completely enclosing a volume of the first non-planar antenna, the minimum-sized parallelepiped having a face with a largest area;

a second antenna proximate to a second side of the ground plane rectangle, and wherein the second antenna is configured to receive signals from at least two frequency bands of the at least three frequency bands;

wherein the first non-planar antenna has a first contour defined as a perimeter of any portions of the first non-planar antenna arranged in the face, perimeters of any closed apertures of any portions of the first non-planar antenna arranged in the face, a perimeter of an orthogonal projection onto the face of any portions of the first non-planar antenna that are not arranged in the face, and perimeters of any closed apertures of the orthogonal projection;

wherein the first contour has a level of complexity defined by complexity factor F_{21} having a value of at least 1.20 and complexity factor F_{32} having a value of at least 1.35; and

wherein the complexity factors F_{21} and F_{32} are given by:

$$F_{21} = -\frac{\log(N_2) - \log(N_1)}{\log(1/2)}$$

$$F_{32} = -\frac{\log(N_3) - \log(N_2)}{\log(1/2)}$$

where N_1 is a number of cells of a grid G_1 that include at least a point of the first contour, N_2 is a number of cells of a grid G_2 that include at least a point of the first contour, and N_3 is a number of cells of a grid G_3 that include at least a point of the first contour,

the grid G_2 divides the face into nine columns of equal width arranged along a long side of the face and an odd number of rows of equal height arranged along a short side of the face, wherein the number of rows results in the cells of grid G_2 being as square as possible,

the grid G_1 being aligned with a corner of the grid G_2 to cover the face, the cells of grid G_1 having widths and heights that respectively are double the widths and heights of the cells of the grid G_2, and

the grid G_3 being aligned with the grid G_2, the cells of the grid G_3 having widths and heights that respectively are half the widths and heights of the cells of the grid G_2, and

wherein the level of complexity of the first contour is configured to provide operation of the wireless device in the at least three frequency bands.

8. The wireless device of claim **7**, wherein the first non-planar antenna includes at least two antenna elements that are electromagnetically coupled.

9. The wireless device of claim **7**, wherein the complexity factor F_{32} for the first contour is smaller than 1.75.

10. The wireless device of claim **7**, wherein a third antenna is configured to operate in at least two frequency bands being different from the at least three frequency bands and the third antenna is arranged within the wireless device.

11. The wireless device of claim **7**, wherein a projection of the antenna rectangle on the ground plane rectangle partially overlaps the ground plane rectangle.

12. The wireless device of claim **7**, wherein the first side of the ground plane rectangle is a short side of the ground plane rectangle.

13. A wireless device comprising:

a ground plane;

a first antenna proximate to a first side of a ground plane rectangle enclosing the ground plane, the first antenna being configured to support at least three frequency bands of the electromagnetic spectrum, a minimum-sized parallelepiped completely enclosing a volume of the first antenna, the minimum-sized parallelepiped having a face with a largest area;

a second antenna proximate to a second side of the ground plane rectangle configured to receive signals from at least two frequency bands of the at least three frequency bands,

wherein the first antenna has a first contour defined as a perimeter of any portions of the first antenna arranged in the face, perimeters of any closed apertures of any portions of the first antenna arranged in the face, a perimeter of an orthogonal projection onto the face of

any portions of the first antenna that are not arranged in the face, and perimeters of any closed apertures of the orthogonal projection;

wherein the first contour has a level of complexity defined by complexity factor F_{21} having a value of at least 1.20 and complexity factor F_{32} having a value of at least 1.35; and

wherein the complexity factors F_{21} and F_{32} are given by:

$$F_{21} = -\frac{\log(N_2) - \log(N_1)}{\log(1/2)}$$

$$F_{32} = -\frac{\log(N_3) - \log(N_2)}{\log(1/2)}$$

where N_1 is a number of cells of a grid G_1 that include at least a point of the first contour, N_2 is a number of cells of a grid G_2 that include at least a point of the first contour, and N_3 is a number of cells of a grid G_3 that include at least a point of the first contour,

the grid G_2 divides the face into nine columns of equal width arranged along a long side of the face and an odd number of rows of equal height arranged along a short side of the, wherein the number of rows results in the cells of grid G_2 being as square as possible,

the grid G_1 being aligned with a corner of the grid G_2 to cover the face, the cells of grid G_1 having widths and heights that respectively are double the widths and heights of the cells of the grid G_2, and

the grid G_3 being aligned with the grid G_2, the cells of the grid G_3 having widths and heights that respectively are half the widths and heights of the cells of the grid G_2, and

wherein the level of complexity of the first contour is configured to provide operation of the wireless device in the at least three frequency bands.

14. The wireless device of claim **13**, wherein the first antenna includes at least two antenna elements that are electromagnetically coupled.

15. The wireless device of claim **13**, wherein the first antenna is planar.

16. The wireless device of claim **13**, wherein a projection of the antenna rectangle on the ground plane rectangle partially overlaps the ground plane rectangle.

17. The wireless device of claim **13**, wherein the complexity factor F_{32} for the first contour is smaller than 1.75.

18. The wireless device of claim **13**, wherein a third antenna is configured to operate in at least two frequency bands being different from the at least three frequency bands and the third antenna is arranged within the wireless device.

19. The wireless device of claim **13**, wherein the first side of the ground plane rectangle is a short side of the ground plane rectangle.

20. The wireless device of claim **13**, wherein the first side of the ground plane rectangle is a long side of the ground plane rectangle.

* * * * *