Design of an Internal Quad-Band Antenna for Mobile Phones

Pascal Ciais, Robert Staraj, Georges Kossiavas, and Cyril Luxey

***Abstract*—This letter presents the design of a compact Planar Inverted-F Antenna (PIFA) suitable for cellular telephone applications. The quarter-wavelength antenna combines the use of a slot, shorted parasitic patches and capacitive loads to achieve multiband operation. The commercial electromagnetic software IE3D is used to design and optimize the structure. The resulting antenna can operate from 880 to 960 MHz and 1710 to 2170 MHz covering GSM, DCS, PCS, and UMTS standards with a VSWR better than 2.5. Good agreement is found between simulated and measured results.**

***Index Terms*—Handset antennas, multiband antennas, planar inverted-F antennas (PIFAs), small antennas.**

I. Introduction

With the rapid progress in new communication standards, miniature multiband internal antennas are needed for modern mobile handsets [1]–[3]. Several techniques applied simultaneously are thus necessary to reduce the size of these antennas while maintaining good multiband/wideband performance.

The antenna presented in this letter combines several of these techniques. The main resonator is a dual-band PIFA antenna tuned to operate at center frequencies of 935 MHz and 1930 MHz. The introduction of a slot into this element allows a frequency decrease of its fundamental resonance while the use of an end positioned capacitive load allows its higher order modes to be decreased in frequency (Fig. 1) [4]. Instead of the previously reported tunable scheme [2], the addition of three quarter-wavelength parasitic elements is used here to create new resonances [5]–[7] and thus enlarge both lower and upper impedance bandwidth. These new resonances are tuned thanks to a lengthening by capacitive loads [7]. This antenna covers the GSM standard (Global System for Mobile communications, 880–960 MHz) with a VSWR (Voltage Standing Wave Ratio) better than 2.5 and also the DCS (Digital Communication System, 1710–1880 MHz), PCS (Personal Communication Services, 1850–1990 MHz) and UMTS (Universal Mobile Telecommunications System, 1920–2170 MHz) standards with a VSWR less than 2.

II. Antenna Structure and Design Rules

The antenna consists of a main patch with three additional parasitic elements placed on the corner of a ground plane whose size is representative of the Printed Circuit Board (PCB) of a typical mobile phone: 40.5 mm × 105 mm (Fig. 1). The PCB size, especially its length, has a strong influence on the performances of mobile phone antennas. In our case, the chosen length is not the best choice for an optimum GSM bandwidth (around 130 mm [9]–[11]) or an optimum DCS bandwidth (around 70 mm [9]–[11]) but it will equally helps in these both bands for an efficient antenna-chassis combination. The dielectric between all patches and the PCB is air and the separation distance is 8.5 mm.

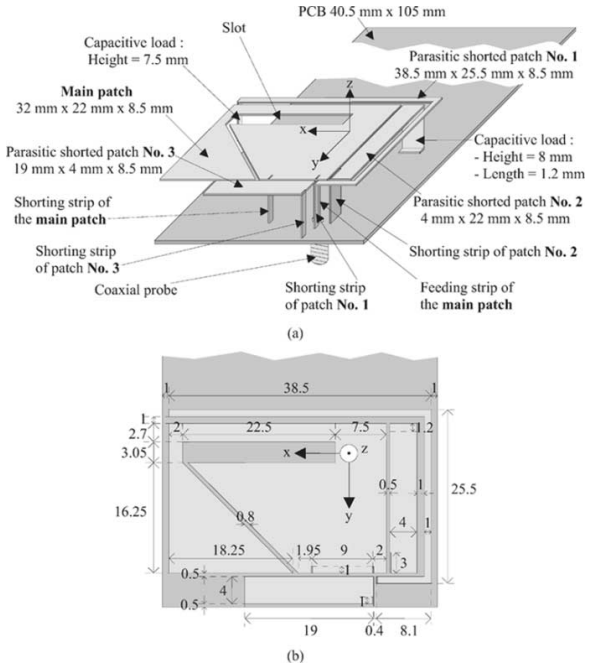

Fig. 1. Configuration of the quad-band antenna. (a) Side view. (b) Top view : all dimensions are in millimeter.

The main quarter-wavelength patch is coaxially fed via a metallic strip. The first objective is to get a proper resonance in the GSM band, where the approximate formula: $f_r = c/4(L + H)$, is used as a starting rule for the design of the patch (with $f_r =$ resonant frequency of the patch, $c =$ velocity of light in free space, $L =$ average length of the patch, and $H =$ height of the patch). The analytical length of a 8.5 mm height quarter-wavelength resonator is then found to be 71.7 mm at 935 MHz in the GSM band. This length can be slightly reduced by using a partial shorting strip instead of a plain shorting wall. Moreover, it has been previously shown that both the antenna with its feeding and shorting pins always have to be positioned at the top of the PCB to obtain an efficient

Manuscript received July 17, 2003; revised November 21, 2003. This work was supported by France Telecom R&D under Contract 424 76-344.

The authors are with the Laboratoire d'Electronique, Antennes et Télécommunications, Université de Nice-Sophia Antipolis/UMR-CNRS 6071, 06560 Valbonne, France (e-mail: ciaisp@elec.unice.fr).

Digital Object Identifier 10.1109/LMWC.2004.825186

1531-1309/04$20.00 © 2004 IEEE

Authorized licensed use limited to: Tara Casaletto. Downloaded on February 24,2025 at 15:52:22 UTC from IEEE Xplore. Restrictions apply.

antenna-chassis combination, especially maximum bandwidth behavior [8]–[11]. In such a configuration, the matching of the antenna to a 50 Ω source is not so difficult to achieve since the 50 Ω input impedance point is not spatially far from the shorting strip. However, due to its intrinsic properties, the design at 935 MHz of a rectangular quarter-wavelength patch with its length aligned with the PCB length, will only lead to an odd number of higher resonance frequencies namely 2805 MHz (3 f_r), 4675 MHz (5 f_r), and so on. As our main element need to resonate in the 1710–2170 MHz band, we need to decrease the working frequency of the 3rd higher mode of this structure. It has been successfully demonstrated in [9] that adding a capacitive load to the structure will result in a decrease of the frequency of its higher modes. This can be achieved by folding the patch over on itself. The value of this capacitance can be controlled by increasing or decreasing the metal facing surfaces. However, this folding operation also reduces the bandwidth of the antenna due to an inherent increase of its total quality factor Q [12].

Three parasitic elements have to be added to the main patch to achieve our desired multiband goal. These elements are chosen quarter-wavelength type, each connected to the ground plane by metallic strips and located near the main patch in order to be correctly electromagnetically excited. Capacitive loads can be added to these parasitic patches by vertically folding their strip ends. Hence, the electrical lengths of these resonators are artificially increased without enlarging the whole antenna size. A first parasitic patch have to be added to enlarge the GSM bandwidth (no. 1 on Fig. 1), its theoretical quarter-wavelength is found to be 76 mm at 888 MHz. Two others parasitic patches must be added to increase the upper bandwidth (no. 2 and no. 3 on Fig. 1). Their theoretical lengths are 34.1 mm at 1760 MHz and 26.9 mm at 2120 MHz.

III. Results

With these empirical design rules, a dual-band patch antenna was first designed and optimized using a simulation tool based on the method of moments : IE3D [13]. Parasitic patches no. 2 and no. 3 were then separately and simultaneously added to this main patch. At last, parasitic patch no. 1 was built to achieve the final goal. All structures have been fine tuned to achieve the best possible coupling between the resonances i.e the largest possible bandwidths. This tuning was made by slightly changing the main dimensions of the parasitic patches and/or their gaps with the main patch. All the optimized dimensions of each stage are not listed here for brevity. Fig. 2 shows the simulated VSWR of the main patch with and without parasitic shorted patches no. 2 and no. 3. It is seen on this graph that the main patch alone has two resonances in the GSM band and around 2 GHz with both small bandwidths. The VSWR curves of the main patch with the addition of only one parasitic patch (no. 2 or no. 3) are also plotted on this graph. In both cases, it increases the upper bandwidth of the first antenna in two different ways: parasitic no. 2 works below the 3rd resonance of the main patch while parasitic No. 3 works above. The simulated VSWR of the main plate with the simultaneous addition of these two shorted patches is also plotted on Fig. 2. This structure has now an upper bandwidth of 470 MHz (1705–2175 MHz)

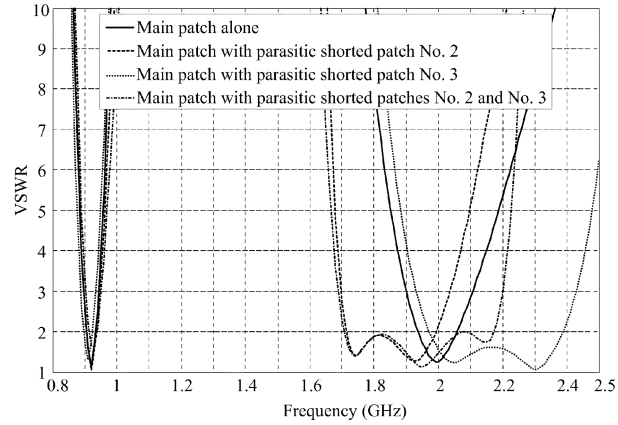

Fig. 2. Simulated VSWR of the main patch with and without parasitic shorted patches no. 2 and no. 3.

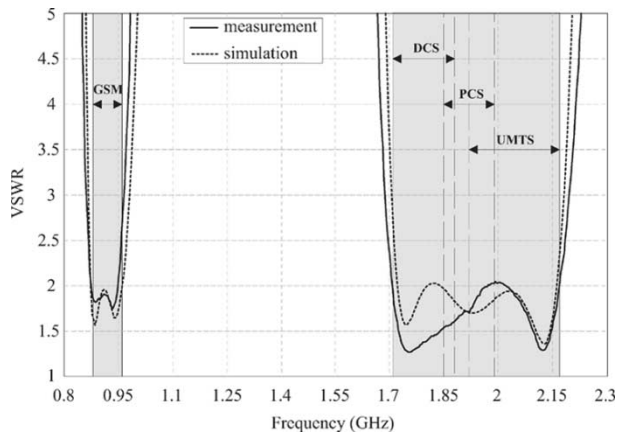

Fig. 3. Measured and simulated VSWR of the quad-band antenna.

with a VSWR less than 2 covering the DCS, PCS and UMTS standards but the lower bandwidth of 40 MHz (905–945 MHz) with a VSWR less than 2.5 is clearly insufficient to cover the entire GSM band. The performances of the main antenna with parasitics no. 2 and no. 3 shows that an additional parasitic element no. 1 is needed to increase the low part of the GSM band. Fig. 3 compares the simulated and measured VSWR of the final quad-band antenna (dimensions 38.5 mm × 28.5 mm × 8.5 mm). The step by step optimization of the structure resulted in a folded dual-band patch antenna of dimensions 32 mm × 22 mm × 8.5 mm with a strong quasilocalized capacitive load at its end and an average quarter-wavelength length of 72.2 mm that is very close to the theoretical value of 71.7 mm. The physical length of parasitic patch no. 1 is 77.6 mm, compared with the theoretical quarter-wavelength of 76 mm at 888 MHz. Capacitive loads were added to the parasitic patches no. 1 and no. 2 by vertically folding their strip ends. Physical lengths of elements no. 2 and no. 3 are respectively 31.2 mm and 19 mm to be compared with the theoretical quarter-wavelengths of 34.1 mm at 1760 MHz and 26.9 mm at 2120 MHz. The small discrepancies between these values comes from the theoretical formula which doesn't take into account localized and distributed capacitive loading effects. This capacitive effect is very strong in the case of parasitic element no. 3 where two high impedance portions of metal face each others. A good agreement between theoretical and experimental results is observed. The measured lower bandwidth is 90 MHz (870–960 MHz) with

Authorized licensed use limited to: Tara Casaletto. Downloaded on February 24,2025 at 15:52:22 UTC from IEEE Xplore. Restrictions apply.

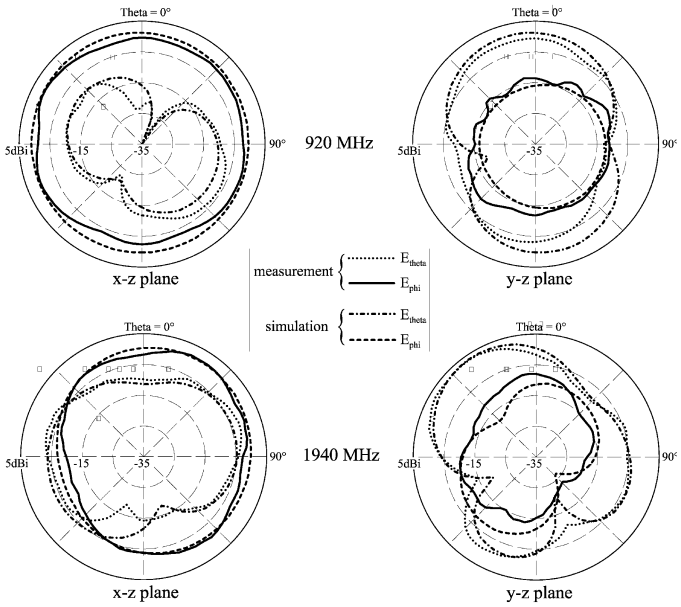

Fig. 4. Measured and simulated radiation gain patterns at 920 MHz and 1940 MHz for the quad-band antenna. Antenna orientation is given in Fig. 1.

a VSWR better than 2.5 while the upper bandwidth is 460 MHz (1710–2170 MHz) with a VSWR less than 2.

The measured and simulated radiation gain patterns of the antenna at 920 MHz and 1940 MHz are depicted in Fig. 4. These patterns reveal a quasi omnidirectional character in the x-z plane as well as a lack of polarization purity due to the radiation from the PCB. However, these two properties are not a drawback in mobile phone applications where omnidirectional radiation patterns as well as both vertical and horizontal electromagnetic field polarization occur in urban environments [14]. These omnidirectional patterns are due to the dipole-like behavior of the structure coming from the antenna-chassis combination : due to the in-phase currents flowing on the PCB in the GSM band, quasi perfect omnidirectional pattern is seen while some directivity appears at 1940 MHz in both planes since the length of the PCB is now larger than half the wavelength. Some discrepancies are found between theoretical and experimental far-field patterns. The small ripple seen in the measured curves comes principally from our measurement setup, especially from the radiation contribution of the feed cable of the antenna : in small antenna measurements, it is difficult to correctly choke the feed cable to avoid currents flowing on it [15], [16]. The measured maximum gains for the antenna are 1 dBi at 920 MHz and 3.3 dBi at 1940 MHz while the simulated are respectively 1.3 dBi and 3.5 dBi. The small discrepancies between these values are mainly attributed to the dielectric losses of the plastic support used in our radiation pattern measurement setup to maintain the antenna.

The efficiency of the structure, defined as the total radiated power divided by the incident power at the feed, takes into account reflection losses due to the mismatch between the coaxial probe and the antenna as well as ohmic losses. The computed efficiency was respectively above 69% and 74% in the GSM and DCS/PCS/UMTS bands which is suitable for mobile phone communication terminals.

IV. Conclusion

A compact multiband PIFA antenna with parasitic elements was designed and placed on a realistic PCB ground plane. This new structure uses various techniques of miniaturization to achieve low return loss in both GSM and DCS/PCS/UMTS bands. The quasi omnidirectional gain radiation pattern characteristics with good efficiency over the covered frequency bands make this antenna suitable for mobile phone applications. Further work will be concentrated on the coverage of new 2.4 GHz and 5.2 GHz standards.

Acknowledgment

The authors would like to thank Prof. V. F. Fusco from the Queen's University of Belfast, Patrice Brachat from France Telecom R&D, and J. Baro for their fruitful remarks about this work.

References

[1] Y.-X. Guo, M. Y. W. Chia, and Z. N. Chen, "Miniature built-in quad band antennas for mobile handsets," *IEEE Antennas Wireless Propagat. Lett.*, vol. 2, pp. 30–32, 2003.

[2] N. C. Karmakar, P. Hendro, and L. S. Firmansyah, "Shorting strap tunable single feed dual-band PIFA," *IEEE Microwave Wireless Comp. Lett.*, vol. 13, pp. 13–15, Jan. 2003.

[3] I. Ang, Y.-X. Guo, and Y. W. Chia, "Compact internal quad-band antenna for mobile phones," *Microw. Opt. Technol. Lett.*, vol. 38, no. 3, pp. 217–223, Aug. 2003.

[4] P. Salonen, M. Keskilammi, and M. Kivikoski, "New slot configurations for dual-band planar inverted-F antenna," *Microw. Opt. Technol. Lett.*, vol. 28, no. 5, pp. 293–298, Mar. 2001.

[5] Y. J. Wang, C. K. Lee, W. J. Koh, and Y. B. Gan, "Design of small and broad-band internal antennas for IMT-2000 mobile handsets," *IEEE Trans. Microw. Theory Tech.*, vol. 49, no. 8, pp. 1398–1403, Aug. 2001.

[6] C. T. P. Song, P. S. Hall, H. Ghafouri-Shiraz, and D. Wake, "Triple band planar inverted F antennas for handheld devices," *Electron. Lett.*, vol. 36, no. 2, pp. 112–114, Jan. 2000.

[7] J. Ollikainen, O. Kivekäs, A. Toropainen, and P. Vainikainen, "Internal dual-band patch antenna for mobile phones," in *Proc. Millennium Conf. Antennas Propagat.*, Davos, Switzerland, Apr. 2000, SP-444, session 3A9.

[8] M. Geissler, D. Heberling, and I. Wolff, "Properties of integrated handset antennas," in *Proc. Millenium Conf. Antennas Propagat.*, Davos, Switzerland, Apr. 2000, SP-444, session 5A5.

[9] D. Manteuffel, A. Bahr, D. Heberling, and I. Wolff, "Design considerations for integrated mobile phone antennas," in *Proc. 11th Int. Conf. Antennas Propagat.*, Apr. 2001, pp. 252–256.

[10] O. Kivekäs, J. Ollikainen, T. Lehtiemi, and P. Vainikainen, "Effect of the chassis length on the bandwidth, SAR, and efficiency of internal mobile phone antennas," *Microw. Opt. Technol. Lett.*, vol. 36, no. 6, pp. 457–462, Mar. 2003.

[11] P. Vainikainen, J. Ollikainen, O. Kivekäs, and I. Kelander, "Resonator-based analysis of the combination of mobile handset antenna and chassis," *IEEE Trans. Antennas Propagat.*, vol. 50, pp. 1433–1444, Oct. 2002.

[12] C. R. Rowell and R. D. Murch, "A capacitively loaded PIFA for compact mobile telephone handsets," *IEEE Trans. Antennas Propagat.*, vol. 45, pp. 837–842, May 1997.

[13] *IE3D, Release 9.33*, Zeland Software, Inc., 2002.

[14] K. Sulonen and P. Vainikainen, "Handset antenna evaluation based on measured distributions," in *Proc. IEEE Instrumentation and Measurement Technology Conf.*, Budapest, Hungary, May. 2001, pp. 519–524.

[15] J. Haley, T. Moore, and J. T. Bernhard, "Experimental investigation of antenna-handset-feed interaction during wireless product testing," *Microw. Opt. Technol. Lett.*, vol. 34, no. 3, pp. 169–172, Aug. 2002.

[16] C. Ilchen, J. Ollikainen, and P. Vainikainen, "Reducing the influence of feed cables on small antenna measurements," *Electron. Lett.*, vol. 35, no. 15, pp. 1212–1214, July 1999.

Authorized licensed use limited to: Tara Casaletto. Downloaded on February 24,2025 at 15:52:22 UTC from IEEE Xplore. Restrictions apply.