3GPP TR 23.882 V1.6.1 (2006-11)

Technical Report

3rd Generation Partnership Project; Technical Specification Group Services and System Aspects; 3GPP System Architecture Evolution: Report on Technical Options and Conclusions (Release 7)

GLOBAL SYSTEM FOR MOBILE COMMUNICATIONS

The present document has been developed within the 3rd Generation Partnership Project (3GPP TM) and may be further elaborated for the purposes of 3GPP.

The present document has not been subject to any approval process by the 3GPP Organizational Partners and shall not be implemented.
This Specification is provided for future development work within 3GPP only. The Organizational Partners accept no liability for any use of this Specification.
Specifications and reports for implementation of the 3GPP TM system should be obtained via the 3GPP Organizational Partners' Publications Offices.

Keywords
3GPP, Architecture, SAE

3GPP

Postal address

3GPP support office address
650 Route des Lucioles - Sophia Antipolis
Valbonne - FRANCE
Tel.: +33 4 92 94 42 00 Fax: +33 4 93 65 47 16

Internet
http://www.3gpp.org

Copyright Notification

No part may be reproduced except as authorized by written permission.
The copyright and the foregoing restriction extend to reproduction in all media.

© 2006, 3GPP Organizational Partners (ARIB, ATIS, CCSA, ETSI, TTA, TTC).
All rights reserved.

Resmed Corp. - Ex. 1037
Page 2

Contents

Foreword 9
Introduction 9
1 Scope 10
2 References 11
3 Definitions, symbols and abbreviations 12
3.1 Definitions 12
3.2 Abbreviations 13
4 Architecture Baseline 13
4.1 Architecture starting point 13
4.2 Architecture for the evolved system – non-roaming case 14
4.3 Architecture for the evolved system –roaming cases 16
4.3.1 Scenario 1: Evolved packet core in the Visited network – Evolved packet core in the Home network 17
4.4 Architectural principles 18
5 Requirements on the Architecture 19
6 Scenarios and Solutions 21
7 Key Architectural Issues 21
7.1 Key Issue Policy control and Charging 22
7.1.1 Description of Key Issue Policy control and Charging 22
7.1.2 Solution for key issue Policy control and Charging 22
7.1.3 Impact on the baseline CN Architecture 22
7.1.4 Impact on the baseline RAN Architecture 22
7.1.5 Impact on terminals used in the existing architecture 22
7.2 Key Issue- Roaming with Local Breakout 22
7.2.1 Description of Key Issue – Roaming with Local Breakout 22
7.2.2 Solution for key issue – Roaming with Local Breakout 23
7.2.3 Impact on the baseline CN Architecture 23
7.2.4 Impact on the baseline RAN Architecture 23
7.2.5 Impact on terminals used in the existing architecture 24
7.3 Tracking Area 24
7.3.1 Description of issue 24
7.3.2 Agreements on Tracking Area Issues 24
7.4 Radio Access Network – Core Network Functional Split 25
7.5 Key Issue Inter 3GPP Access System Mobility in Idle State 27
7.5.1 Description of Key Issue Inter 3GPP Access System Mobility in Idle State 27
7.5.2 Solution for key issue Inter 3GPP Access System Mobility in Idle State 27
7.5.2.1 Alternative Solution A 27
7.5.2.1.1 General 27
7.5.2.1.2 Alternative Solution A1 27
7.5.2.1.3 Alternative Solution A2 30
7.5.2.1.4 Impact on the baseline CN Architecture 31
7.5.2.1.5 Impact on the baseline RAN Architecture 31
7.5.2.1.6 Impact on terminals used in the existing architecture 31
7.5.2.2 Alternative Solution B 31
7.5.2.2.1 Description 31
7.5.2.2.2 Impact on the baseline CN Architecture 35
7.5.2.2.3 Impact on the baseline RAN Architecture 35
7.5.2.2.4 Impact on terminals used in the existing architecture 35
7.6 Key issue: Limiting signalling due to idle mode mobility between E-UTRA and UTRA/GSM 35
7.6.1 Requirement 35
7.6.2 Potential Solutions 35
7.6.3 Selected Solution(s) 36
7.7 Key Issue Intra LTE-Access-System Mobility in LTE_IDLE State 36

Resmed Corp. - Ex. 1037
Page 3

7.7.1 Description of Key Issue Intra LTE-Access-System Mobility in LTE_IDLE State ... 36
7.7.2 Solution for key issue Intra LTE-Access-System Mobility in Idle State ... 36
7.7.2.1 General ... 36
7.7.2.2 Mobility in LTE_IDLE State ... 37
7.7.2.3 Intra LTE-Access-System change in idle state with user context transfer ... 38
7.7.2.4 Intra LTE-Access-System change in idle state with re-attach ... 39
7.7.3 Impact on the baseline CN Architecture ... 39
7.7.4 Impact on the baseline RAN Architecture ... 39
7.7.5 Impact on terminals used in the existing architecture ... 39
7.7.6 Alternative solution ... 39
7.7.6.1 Solution for key issue Intra LTE-Access-System Mobility in Idle State ... 39
7.8 Key Issue: Inter access system handover ... 41
7.8.1 Principles and terminologies ... 41
7.8.2 Inter access system handover between 3GPP access systems (UTRAN/Evolved HSPA/GERAN and SAE/LTE 3GPP access system) ... 41
7.8.2.1 Description ... 41
7.8.2.2 Alternative solution A ... 42
7.8.2.2.1 Description ... 42
7.8.2.2.2 Impact on the baseline CN Architecture ... 44
7.8.2.2.3 Impact on the baseline RAN Architecture ... 44
7.8.2.2.4 Impact on terminals used in the existing architecture ... 44
7.8.2.3 Alternative solution B ... 44
7.8.2.3.1 Description ... 44
7.8.2.3.2 Impact on the baseline CN Architecture ... 47
7.8.2.3.3 Impact on the baseline RAN Architecture ... 47
7.8.2.3.4 Impact on terminals used in the existing architecture ... 47
7.8.2.4 Alternative solution C ... 47
7.8.2.4.1 Description ... 47
7.8.2.4.2 Impact on baseline CN Architecture ... 49
7.8.2.4.3 Impact on baseline RAN Architecture ... 50
7.8.2.4.4 Impact on terminals used in the existing architecture ... 50
7.8.2.5 Alternative solution D ... 50
7.8.2.5.1 Description ... 50
7.8.2.5.2 Impact on baseline CN Architecture ... 52
7.8.2.5.3 Impact on baseline RAN Architecture ... 52
7.8.2.5.4 Impact on terminals used in the existing architecture ... 52
7.8.2.6 Comparison of Handover Flows ... 52
7.8.3 Inter access system handover between 3GPP and non 3GPP access systems ... 53
7.8.3.1 Description of key issue – Inter access system handover between 3GPP and non-3GPP access systems ... 53
7.8.3.2 Solution of key issue – Inter access system handover between 3GPP and non-3GPP access systems ... 53
7.8.3.2.1 Relationship with SAE architecture ... 53
7.8.3.2.2 Additional solution aspects ... 55
7.8.3.2.3 MIP version implications ... 55
7.8.3.2.4 Use of local mobility protocols ... 56
7.8.3.3 Comparison of different mobility management schemes ... 56
7.9 Key Issue – Default IP Access Service ... 59
7.9.1 Description of Key Issue – Default IP Access Service ... 59
7.9.2 Solution for Key Issue – Default IP Access Service ... 60
7.9.3 Impact on the baseline CN Architecture ... 60
7.9.4 Impact on the baseline RAN Architecture ... 60
7.9.5 Impact on terminals used in the existing architecture ... 60
7.10 Key issue – IP connectivity with multiple PDNs ... 60
7.10.1 Description of Key Issue – IP connectivity with multiple PDNs ... 60
7.10.2 Solution for Key Issue IP connectivity with multiple PDNs ... 62
7.10.2.1 Working Assumptions ... 62
7.10.2.2 Solution alternatives ... 62
7.10.2.3 Alternative solutions for the use cases ... 65
7.10.3 Impact on the baseline CN Architecture ... 65
7.10.4 Impact on the baseline RAN Architecture ... 66
7.10.5 Impact on terminals used in the existing architecture ... 66

Resmed Corp. - Ex. 1037
Page 4

7.11 Key Issue – Functions in the evolved packet core ... 66
7.11.1 Description of Key Issue – Functions in the evolved packet core ... 66
7.11.2 Solution for Key Issue – grouping of the functions ... 67
7.11.2.1 Allocation of evolved packet core functions to UPE, MME and Inter-AS Anchor ... 67
7.11.2.2 Alternative 1 ... 68
7.11.2.3 Alternative 2 ... 68
7.11.2.4 Alternative … ... 68
7.11.3 Impact on the baseline CN Architecture ... 68
7.11.4 Impact on the baseline RAN Architecture ... 68
7.11.5 Impact on terminals used in the existing architecture ... 68
7.12 Key Issue QoS concepts ... 68
7.12.1 Terminology ... 68
7.12.2 Description of Key Issue QoS concepts ... 69
7.12.3 QoS Concept ... 69
7.12.4 SAE Bearer Service Architecture ... 70
7.12.5 Granularity of QoS Control ... 71
7.12.6 The QoS Profile of the SAE Bearer ... 71
7.12.7 Label Usage Principles ... 72
7.12.8 Aggregate Maximum Bit Rate ... 73
7.12.9 Resource Establishment and QoS Signalling ... 73
7.12.10 Identified Open Issues ... 75
7.12.11 Impact on the baseline CN Architecture ... 75
7.12.12 Impact on the baseline RAN Architecture ... 75
7.12.13 Impact on terminals used in the existing architecture ... 75
7.13 Key Issue Network Attachment ... 75
7.13.1 Description of Network Attachment ... 75
7.13.2 Solution for Key Issue Network Attachment ... 75
7.13.3 Impact on the baseline CN Architecture ... 78
7.13.4 Impact on the baseline RAN Architecture ... 78
7.13.5 Impact on terminals used in the existing architecture ... 78
7.14 Key Issue Paging and C-plane establishment ... 79
7.14.1 Description of Key Issue Paging and Evolved RAN C-plane establishment ... 79
7.14.2 Solution for Key Issue Paging and Evolved RAN C-plane establishment ... 79
7.14.3 Impact on the baseline CN Architecture ... 81
7.14.4 Impact on the baseline RAN Architecture ... 81
7.14.5 Impact on terminals used in the existing architecture ... 81
7.15 Key Issue: Intra LTE-Access-System inter MME/UPE handover in the active mode ... 81
7.15.1 Description of Key Issue ... 81
7.15.2 Solution for key issue ... 81
7.15.2.1 Alternative 1 ... 81
7.15.2.1.1 Description ... 81
7.15.2.1.2 Impact on the baseline CN Architecture ... 83
7.15.2.1.3 Impact on the baseline RAN Architecture ... 83
7.15.2.1.4 Impact on terminals used in the existing architecture ... 83
7.15.2.2 Alternative 2 ... 84
7.15.2.2.1 Description ... 84
7.15.2.x Alternative x ... 86
7.16 Key Issue – Network Redundancy and Load Sharing ... 86
7.16.1 Description of Key Issue – Network Redundancy and Load-sharing ... 86
7.16.2 General Solutions for key issue – Network Redundancy and Load-sharing ... 86
7.16.3 S1-flex Concept ... 87
7.16.3.1 Description of issue ... 87
7.16.3.2 Assumptions on S1-flex concept ... 87
7.17 Key Issue Network Sharing ... 87
7.17.1 Description of Network Sharing ... 87
7.17.2 Solution for Key Issue Network Sharing ... 87
7.17.2.1 General ... 87
7.17.2.2 S1-flex configuration ... 88
7.17.2.3 Broadcast system information for an SAE/LTE network ... 88
7.17.2.4 Network selection in an SAE/LTE network ... 88
7.17.2.5 Assignment of Operator and MME/UPE node ... 88
7.17.2.6 Accounting in RAN ... 89

Resmed Corp. - Ex. 1037
Page 5

7.17.3 Impact on the baseline CN Architecture ... 89
7.17.4 Impact on the baseline RAN Architecture ... 89
7.17.5 Impact on terminals used in the existing architecture ... 89
7.18 Key Issue Intra-LTE-Access Mobility Support for Ues in LTE_ACTIVE ... 89
7.18.1 Description of Key Issue Intra-LTE-Access Mobility Support for Ues in LTE_ACTIVE ... 89
7.18.2 Solution for key issue Intra-LTE-Access Mobility Support for Ues in LTE_ACTIVE ... 89
7.18.2.1 C-plane handling ... 89
7.18.2.2 User plane handling ... 91
7.18.3 Impact on the baseline CN Architecture ... 91
7.18.4 Impact on the baseline RAN Architecture ... 91
7.18.5 Impact on terminals used in the existing architecture ... 91
7.19 Key Issue – Service continuity between IMS over SAE/LTE access and CS domain ... 91
7.19.1 Voice call continuity between IMS over SAE/LTE access and CS domain ... 91
7.19.1.1 Description of key issue Voice call continuity between IMS over SAE/LTE access and CS domain ... 91
7.19.1.2 General aspects ... 92
7.19.1.3 Alternative solution A – Combinational VCC ... 92
7.19.1.3.1 Description ... 92
7.19.1.3.2 Impact on the baseline CN Architecture ... 93
7.19.1.3.3 Impact on the baseline RAN Architecture ... 93
7.19.1.3.4 Impact on terminals used in the existing architecture ... 93
7.19.1.4 Alternative solution B ... 93
7.19.1.4.1 Description ... 93
7.19.1.4.2 Impact on the baseline CN Architecture ... 94
7.19.1.4.3 Impact on the baseline RAN Architecture ... 94
7.19.1.4.4 Impact on terminals used in the existing architecture ... 94
7.19.1.5 Alternative solution C – CreDT ... 94
7.19.1.5.1 Description ... 94
7.19.1.5.2 Impact on the baseline CN Architecture ... 95
7.19.1.5.3 Impact on the baseline RAN Architecture ... 95
7.19.1.5.4 Impact on terminals used in the existing architecture ... 95
7.19.1.6 Alternative solution D - « Inter-MSC Handover » solution ... 95
7.19.1.6.1 Description ... 95
7.19.1.6.2 Impact on the baseline CN Architecture ... 95
7.19.1.6.3 Impact on the baseline RAN Architecture ... 95
7.19.1.6.4 Impact on terminals used in the existing architecture ... 95
7.20 Key Issue - SAE Identities ... 95
7.20.1 Description of issue ... 95
7.20.2 Agreements on SAE Identities ... 96

8 Consolidated architecture ... 99

9 Conclusions ... 99

Annex A: Open Issues ... 100

Annex B: Summary of different high level architecture proposals ... 102
B.0 General ... 102
B.1 Concept B1 ... 102
B.2 Concept B2 ... 107

Annex C: Summary of different MM concepts ... 109

Annex D: More detailed descriptions of potential solutions for limiting signalling due to idle mode mobility between E-UTRA and UTRA/GSM ... 111

D.1 Introduction ... 111

D.2 Potential Solutions ... 111
D.2.1 Do Nothing ... 111
D.2.1.1 Overview ... 111
D.2.1.2 Advantages ... 111
D.2.1.3 Drawbacks ... 111
D.2.2 Common Routeing Area and common SGSN ... 111

Resmed Corp. - Ex. 1037
Page 6

D.2.2.1 Overview ... 111
D.2.2.2 Advantages ... 112
D.2.2.3 Drawbacks ... 112
D.2.3 Common RAN / CN for E-UTRA / UTRA ... 112
D.2.3.1 Overview ... 112
D.2.3.2 Advantages ... 112
D.2.3.3 Drawbacks ... 112
D.2.4 Equivalent Routeing Areas and SGSN proxy ... 112
D.2.4.1 Architectural overview ... 112
D.2.4.2 Concept: Equivalent Routeing Areas ... 113
D.2.4.3 LERA Management ... 114
D.2.4.4 Downlink data flow to an "inactive" UE ... 115
D.2.4.4.1 Solution A ... 115
D.2.4.4.2 Solution B ... 117
D.2.4.5 Summary ... 118
D.2.4.6 Advantages ... 118
D.2.4.7 Drawbacks ... 118
D.2.5 UE remains camped on the last used RAT ... 118
D.2.5.1 Description ... 118
D.2.5.2 Advantages ... 119
D.2.5.3 Drawbacks ... 119
D.2.6 Packet Data Bearer Proxy ... 119
D.2.6.1 Architectural overview ... 119
D.2.6.2 Information flow: registration and downlink data transfer ... 121
D.2.6.3 Advantages ... 122
D.2.6.4 Drawbacks ... 122
D.2.7 Inter RAT Resource Allocation ... 122
D.2.7.1 Architectural overview ... 122
D.2.7.2 Information flow: registration and uplink/downlink data transfer ... 124
D.2.7.3 Advantages ... 125
D.2.7.4 Drawbacks ... 125
D.2.8 User-IP layer interconnection ... 125
D.2.8.1 Architectural overview ... 125
D.2.8.2 Information flow: registration and downlink data transfer ... 126
D.2.8.3 Advantages ... 127
D.2.8.4 Drawbacks ... 128
D.2.9 Combined MME/SGSN ... 128
D.2.9.1 Architectural overview ... 128
D.2.9.2 Downlink data flow to an "inactive" UE ... 129
D.2.9.3 Summary ... 131
D.2.9.4 Advantages ... 131
D.2.9.5 Drawbacks ... 131

D.3 Information Flows ... 132
D.3.1 Attach to SAE and RAT change to 2G/3G ... 132
D.3.2 Attach to UMTS and RAT change to LTE ... 133
D.3.3 Uplink Data Transfer ... 135
D.3.4 PMM-IDLE and URA-PCH state handling ... 136
D.3.5 Downlink Data Transfer ... 137
D.3.6 SGSN (respectively MME) change ... 138
D.3.7 re-authentication when UE camped within ERA ... 139

D.4 Potential mechanisms for context retrieval ... 139
D.4.1 Fully synchronous mechanism ... 139
D.4.2 MME as master, SGSN as slave ... 139
D.4.3 Coordination between MME and SGSN ... 140
D.4.4 Retrieval context from the last access node ... 140
D.4.5 MME as master, SGSN as slave, plus CRN mechanism ... 140
D.4.6 Coordination between MME and SGSN, plus CRN mechanism ... 140
D.4.7 Retrieval context from the last access node, plus CRN mechanism ... 140

Resmed Corp. - Ex. 1037
Page 7

Annex E: Mobility between pre-SAE/LTE 3GPP and non 3GPP access systems 141

E.1 General 141

E.2 Description of mobility between pre-SAE/LTE 3GPP and non 3GPP access systems.....141

E.3 Solutions for mobility between pre-SAE/LTE 3GPP and non 3GPP access systems.....141
E.3.1 Solution A 141

E.4 Impact on the baseline CN architecture 146
E.4.1 Solution A 146

E.5 Impact on the baseline RAN architecture.....147

E.6 Impact on terminals used in the existing architecture 147
E.6.1 Solution A 147

Annex F: Policy related network Scenarios 148

F.1 Scenario 1: Inter-system mobility within the home domain 148

F.2 Scenario 2: Roaming with home forwarding/tunnelling of traffic 148

F.3 Scenario 3: Static roaming agreement.....149

F.4 Scenario 4: Roaming with route optimisation of traffic in the visited domain, AF in the home domain.....149

F.5 Scenario 5: Roaming with local breakout of traffic in the visited domain, AF in the visited domain .149

F.6 Scenario 6: Roaming with local breakout of some traffic in the visited domain, forwarding/tunnelling other traffic to home network.....149

Annex G: Examples of Operator-Controlled Services 150

G.1 Operator-Controlled Rx Services 150

G.2 Operator-Controlled Gx-only Services 150

Annex H: Signalling charts for combined or separated MME and UPE 151

H.1 Alternative B and C architecture scenarios and functional allocation 152
H.1.1 MME and UPE functional allocation..... 152
H.1.2 Reference point impact from MME/UPE split..... 152

H.2 Attach including default bearer handling 153

H.3 TA Update without MME or UPE change 154

H.4 Inter eNB Handover in LTE_ACTIVE mode (intra MME and intra UPE) 156

H.5 Inter 3GPP Handover between pre-SAE/LTE and SAE/LTE accesses in LTE_ACTIVE mode 159

H.6 Paging and Service Request 160

H.7 PCRF triggered establishment of Dedicated Bearers 161

H.8 Inter MME and/or inter UPE change, including support for service continuity 163

H.9 Authentication/Re-Authentication 165

H.10 Comparison of Alternatives 165

Annex I: Open issues for the SAE architecture (Informative).....168

Annex J: Change history.....170

Resmed Corp. - Ex. 1037
Page 8

Foreword

This Technical Report has been produced by the 3rd Generation Partnership Project (3GPP).

The contents of the present document are subject to continuing work within the TSG and may change following formal TSG approval. Should the TSG modify the contents of the present document, it will be re-released by the TSG with an identifying change of release date and an increase in version number as follows:

Version x.y.z

where:

x the first digit:

1 presented to TSG for information;

2 presented to TSG for approval;

3 or greater indicates TSG approved document under change control.

y the second digit is incremented for all changes of substance, i.e. technical enhancements, corrections, updates, etc.

z the third digit is incremented when editorial only changes have been incorporated in the document.

Introduction

To ensure competitiveness of the 3GPP systems in a time frame of the next 10 years and beyond, a long-term evolution of the 3GPP access technology needs to be considered.

In particular, to enhance the capability of the 3GPP system to cope with the rapid growth in IP data traffic, the packet-switched technology utilised within 3G mobile networks requires further enhancement. A continued evolution and optimisation of the system concept is also necessary in order to maintain a competitive edge in terms of both performance and cost. Important parts of such a long-term evolution include reduced latency, higher user data rates, improved system capacity and coverage, and reduced overall cost for the operator.

Additionally, it is expected that IP based 3GPP services will be provided through various access technologies. A mechanism to support seamless mobility between heterogeneous access networks, e.g. I-WLAN and 3GPP access systems, is a useful feature for future network evolution.

In order to achieve this, an evolution or migration of the network architecture, as well as an evolution of the radio interface, partly addressed already by individual WIDs, should be considered.

Architectural considerations will include end-to-end systems aspects, including core network aspects and the study of a variety of IP connectivity access networks (e.g. fixed broadband access).

Resmed Corp. - Ex. 1037
Page 9

1 Scope

The objective of this feasibility study is to develop a framework for an evolution or migration of the 3GPP system to a higher-data-rate, lower-latency, packet-optimized system that supports, multiple RATs. The focus of this work will be on the PS domain with the assumption that voice services are supported in this domain.

The main objectives are to address the following aspects:

1) Overall architecture impacts stemming from requirements coming out from TSG-RAN's Study Item on Radio Evolution (see SP-040915). The architectural developments should take into account the targets for the evolution of the radio-interface, e.g.:

   i) whether there is a need for a modified network architecture and/or different functional split between network nodes (compared to the current 3GPP architecture);

   ii) how to provide a very low latency (including C-plane) for the overall network (including core network, radio access network and radio access technology);

   iii) how to provide the efficient support of the various types of services, especially from the PS domain (e.g. Voice over IP, Presence).

2) Overall architecture impacts stemming from the work in SA1 on an All-IP Network (AIPN) (see TS 22.258 [4]), e.g.:

   i) support of a variety of different access systems (existing and future) and access selection based on combinations of operator policies, user preferences and access network conditions;

   ii) how to realize improvements in basic system performance e.g. communication delay, communication quality, connection set-up time, etc.;

   iii) how to maintain the negotiated QoS across the whole system; in particular to address inter-domain and inter-network interworking, and, QoS on the network link to the Base Station site.

NOTE: Although used in the SA WG1 TS 22.258 [4], the All-IP Network (AIPN) term is not used in the network architecture in this SAE TR as mapping between the term AIPN used in SA1 and the evolved architecture is not deemed necessary to progress the SAE work. Instead, the requirements on AIPN in TS 22.258 [4] are treated as overall system requirements. Even though the AIPN includes an evolved, IP based, core network and evolved IMS domain, the scope of this SAE TR does not include the IMS domain aspects.

3) Overall architecture aspects of supporting mobility between heterogeneous access networks, including service continuity. e.g.:

   i) service continuity between I-WLAN and the 3GPP PS domain;

   ii) how to support multiple radio access technologies and terminal mobility between different radio access technologies;

   iii) how to maintain and support the same capabilities of access control (authentication, authorization), privacy and charging when moving between different radio access technologies.

Migration aspects should be taken into account for the above, i.e. how to migrate from the existing architecture.

In the course of conducting this feasibility study additional individual Work Items may be identified and prepared to address certain aspects and to take care of the respective specification work. The timelines of those Work Items may or may not concur with the timeline of this feasibility study.

Resmed Corp. - Ex. 1037
Page 10

2 References

The following documents contain provisions which, through reference in this text, constitute provisions of the present document.

- References are either specific (identified by date of publication, edition number, version number, etc.) or non-specific.
- For a specific reference, subsequent revisions do not apply.
- For a non-specific reference, the latest version applies. In the case of a reference to a 3GPP document (including a GSM document), a non-specific reference implicitly refers to the latest version of that document *in the same Release as the present document*.

[1] 3GPP TR 41.001: "GSM Release specifications".

[2] 3GPP TR 21 912 (V3.1.0): "Example 2, using fixed text".

[3] 3GPP TS 23.002: "Network Architecture".

[4] 3GPP TS 22.258: "Service Requirements for the All-IP Network (AIPN); Stage 1".

[5] IETF RFC 4004: "Diameter Mobile IPv4 Application", August 2005.

[6] IETF RFC 4555: "IKEv2 Mobility and Multihoming Protocol (MOBIKE)".

[7] 3GPP TS 43.129: "Packed-switched handover for GERAN A/Gb mode; Stage 2".

[8] IETF RFC 4068: "Fast Handovers for Mobile IPv6".

[9] R. Koodli and C. E. Perkins: "Mobile IPv4 Fast Handovers", Internet Draft, draft-ietf-mip4-fmipv4-02, October 2006. Available at http://www.ietf.org/internet-drafts/draft-ietf-mip4-fmipv4-02.tx.

[10] IETF RFC 3344: "IP Mobility Support for IPv4".

[11] IETF RFC 3775, "Mobility Support in IPv6".

[12] H. Levkowetz: "The NETLMM Protocol", Internet Draft, draft-giaretta-netlmm-dt-protocol-02, October 2006. Available at: http://www.ietf.org/internet-drafts/draft-giaretta-netlmm-dt-protocol-02.txt.

[13] Void.

[14] Void.

[15] Void.

[16] 3GPP TR 25.931: "UTRAN functions, examples on signalling procedures".

[17] S. Gundavelli et. al.: "Proxy Mobile IPv6", Internet Draft, draft-sgundave-mip6-proxymip6-00, October 2006. Available at: http://tools.ietf.org/wg/mip6/draft-sgundave-mip6-proxymip6-00.txt.

[18] 3GPP TR 25.912: "3rd Generation Partnership Project; Technical Specification Group Radio Access Network; Feasibility Study for Evolved UTRA and UTRAN".

[19] 3GPP TS 23.207: "End-to-end Quality of Service (QoS) concept and architecture"

[20] 3GPP TS 23.203: "Policy and Charging Control Architecture"

[21] IETF RFC 2597: "Assured Forwarding PHB Group"

[22] IETF RFC 3246: "An Expedited Forwarding PHB (Per-Hop Behavior)"

[23] IETF RFC 3344: "IP Mobility Support for IPv4"

Resmed Corp. - Ex. 1037
Page 11

[24] IETF RFC 3775: "Mobility Support in IPv6"

[25] Void.

[26] K. Leung, G. Dommety, P. Yegani and K.Chowdhury: "Mobility Management using Proxy Mobile IPv4", Internet Draft, draft-leung-mip4-proxy-mode-01, June 2006. http://www.ietf.org/internet-drafts/draft-leung-mip4-proxy-mode-01.txt

[27] H. Soliman: "Mobile IPv6 support for dual stack Hosts and Routers (DSMIPv6)", Internet Draft, draft-ietf-mip6-nemo-v4traversal-03, October 2006. http://www.ietf.org/internet-drafts/draft-ietf-mip6-nemo-v4traversal-03.txt

[28] 3GPP TS 23.234: "3GPP System to Wireless Local Area Network (WLAN) Interworking; System Description"

[29] 3GPP TS 23.206: "Voice Call Continuity between CS and IMS; Stage 2"

[30] 3GPP TR 23.806: "Voice call continuity between Circuit Switched (CS) and IP Multimedia Subsystem (IMS) Study"

[31] IETF RFC 4140: "Hierarchical Mobile IPv6 Mobility Management (HMIPv6)"

[32] G. Tsirtsis, H. Soliman, V. Park: "Dual Stack Mobile IPv4", Internet Draft, draft-ietf-mip4-dsmipv4-00.txt, July 2006. http://www.ietf.org/internet-drafts/draft-ietf-mip4-dsmipv4-00.txt

[33] K. Chowdhury, A. Singh: "Network Based Layer 3 Connectivity and Mobility Management for IPv6", Internet Draft, draft-chowdhury-netmip6-01.txt, September 2006. http://www.ietf.org/internet-drafts/draft-chowdhury-netmip6-01.txt.

3 Definitions, symbols and abbreviations

3.1 Definitions

For the purposes of the present document, the following terms and definitions apply:

Mobility Management Entity (MME): manages and stores UE context (for idle state: UE/user identities, UE mobility state, user security parameters). It generates temporary identities and allocates them to UEs. It checks the authorization whether the UE may camp on the TA or on the PLMN. It also authenticates the user.

MME Pool Area: An MME Pool Area is defined as an area within which a UE may be served without need to change the serving MME. An MME Pool Area is served by one or more MMEs ("pool of MMEs") in parallel.

UPE Pool Area: A UPE Pool Area is defined as an area within which a UE may be served without need to change the serving UPE. A UPE Pool Area is served by one or more UPEs ("pool of UPEs") in parallel.

User Plane Entity (UPE): terminates for idle state Ues the downlink data path and triggers/initiates paging when downlink data arrive for the UE. It manages and stores UE contexts, e.g. parameters of the IP bearer service or network internal routing information. It performs replication of the user traffic in case of interception.

It is FFS whether Charging Information for inter-operator accounting is in UPE or in another functional block.

Idle State: is LTE_IDLE for SAE/LTE or PMM_IDLE for 2G/3G or URA_PCH, which is FFS

IP Service continuity: IP service continuity is the capability of a system to hide the impact of mobility events to the end user and the IP application(s), i.e. the service can continue without user intervention or special application support to mask the effects of a mobility event.

Nomadic Terminal: Terminal that does not have full mobile capabilities but would normally be expected to roam between different points of attachment of the network, both wireless and wired.
Backward Handover: the source RAN node initiates the handover, and resources are prepared in the target RAN Nodes. Examples of this concept are reported in TR 25.931 [16].

Resmed Corp. - Ex. 1037
Page 12

Forward Handover: The UE changes to the target RAN node without any preparation in the network. Examples of this concept are reported in TR 25.931 [16].

Trusted non-3GPP IP Access: A non-3GPP IP Access Network is defined as a "trusted non-3GPP IP Access Network" if the 3GPP EPC system chooses to trust such non-3GPP IP access network. The 3GPP EPC system operator may choose to trust the non-3GPP IP access network operated by the same or different operators, e.g. based on business agreements.

Note that specific security mechanisms may be in place between the trusted non-3GPP IP Access Network and the 3GPP EPC to avoid security threats. It is assumed that an IPSec tunnel between the UE and the 3GPP EPC is not required.

On the contrary, an untrusted non-3GPP IP access is an IP access network where 3GPP network requires use of IPSec between the UE and the 3GPP network in order to provide adequate security mechanism acceptable to 3GPP network operator. An example of such untrusted non-3GPP IP access is WLAN and it is made trusted in the Interworking WLAN specifications developed within 3GPP.

3.2 Abbreviations

For the purposes of the present document, the following abbreviations apply:

EPC	Evolved Packet Core network
IASA	Inter Access System Anchor

4 Architecture Baseline

4.1 Architecture starting point

This chapter describes the architecture baseline as the basis for further evolving the architecture. The full view of Release 6 network architecture is the reference logical architecture with some additions from Release 7 work.

The Release 7 work that is included in the baseline architecture is:

- PCRF and related reference points.

Editors Note: It is FFS what other Release 7 work that may be added to the baseline architecture

NOTE: For simplification reasons Gx+ and Rx+ is made explicit in the figure but it should be clear that in Release 6 then the interfaces Gx/Rx and Go/Gq are applicable towards the CRF and PDF respectively.

More specifically the feasibility study shall focus on evolving the PS and I-WLAN architecture, functionalities and figure 4.1-1. Refer to TS 23.002 [3] for further detailed description. The functional entities that are depicted in figure 4.1-1 are those that are potentially impacted as a result of this study, in relation to the reference points shown.

Editors Note: The interfaces and network entities related to CAMEL and LCS are currently not shown in figure 4.1-1.

Resmed Corp. - Ex. 1037
Page 13

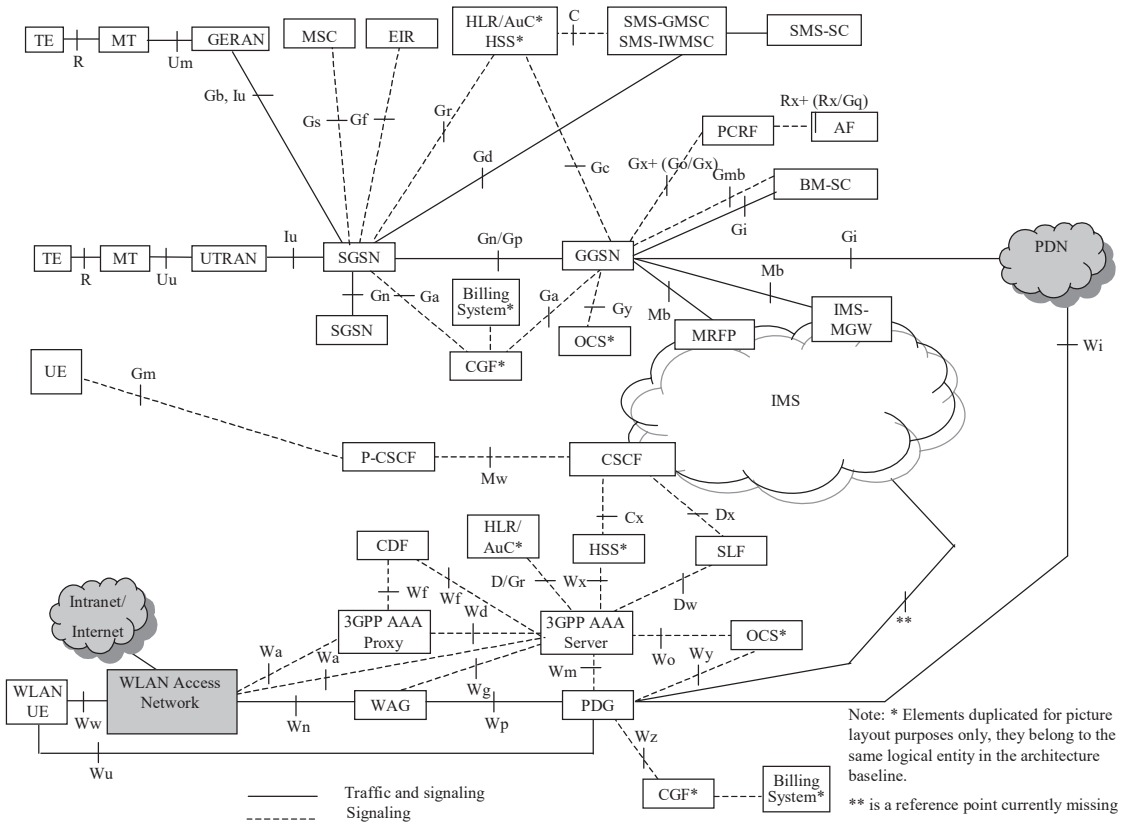

Figure 4.1-1: Logical baseline architecture for 3GPP

4.2 Architecture for the evolved system – non-roaming case

Figure 4.2-1 depicts the base line high level architecture for the evolved system.

Editor's note:

- It is not the finalized architecture model for the evolved system. i.e. it does not contain all functions/interfaces required, and some functions/interfaces may be added, deleted or modified in the course of the key issue discussions.
- In this TR, a trusted non-3GPP IP access is also referred to as the non-3GPP IP access, and an untrusted non-3GPP IP accesses are accommodated by is also referred to as the WLAN 3GPP IP access.

Resmed Corp. - Ex. 1037
Page 14

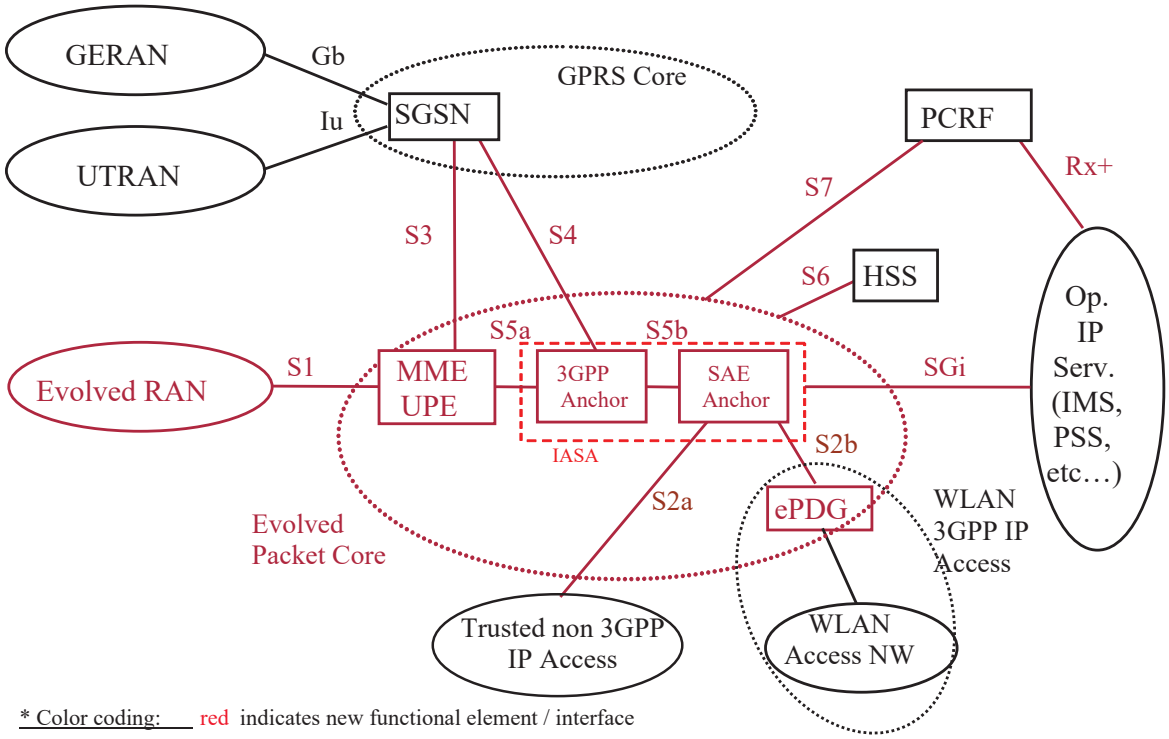

Figure 4.2-1: Logical high level architecture for the evolved system

The location of the functions belonging to MME/UPE is dependent on RAN CN function split table, i.e. it is FFS.

It is FFS whether there is an interface between UTRAN and evolved packet core.

The separation of MME/UPE into two separate entities is FFS.

Editor's Note: Additional Architecture diagram updates will be done following concrete resolutions on the other key issues. The current figure above does not intend to draw any conclusion regarding the functional grouping within the Evolved Packet Core. The number of interfaces and their termination points may change once the grouping and other key issues are resolved.

3GPP Anchor

The 3GPP Anchor is a functional entity that anchors the user plane for mobility between the 2G/3G access system and the LTE access system.

SAE Anchor

The SAE Anchor is a functional entity that anchors the user plane for mobility between 3GPP access systems and non-3GPP access systems.

Whether the 3GPP Anchor functional entity is co-located with the MME/UPE or the SAE Anchor or both is FFS. I.e. it is FFS whether to standardize open interfaces between the MME/UPE and the 3GPP Anchor and between the 3GPP Anchor and the SAE Anchor.

Note: The Inter Access System Anchor (IASA) is indicated with a dotted box in Figure 4.2-1, because it is used in several parts of this TR, including in figures, to represent both the 3GPP Anchor and the SAE Anchor.

Note: It is FFS how to map SAE architecture for the non-roaming case in Figure 4.2-1 to the roaming architectures in clause 4.3

ePDG (evolved PDG)

Resmed Corp. - Ex. 1037
Page 15

It comprises the functionality of a PDG according to 3GPP TS 23.234 [28]; modifications/extensions compared to PDG are FFS.

Reference points

S1: It provides access to Evolved RAN radio resources for the transport of user plane and control plane traffic. The S1 reference point shall enable MME and UPE separation and also deployments of a combined MME and UPE solution.

S2a: It provides the user plane with related control and mobility support between trusted non 3GPP IP access and the SAE Anchor.

S2b: It provides the user plane with related control and mobility support between ePDG and the SAE Anchor.

S3: It enables user and bearer information exchange for inter 3GPP access system mobility in idle and/or active state. It is based on Gn reference point as defined between SGSNs.

User data forwarding for inter 3GPP access system mobility in active state (FFS).

S4: It provides the user plane with related control and mobility support between GPRS Core and the 3GPP Anchor and is based on Gn reference point as defined between SGSN and GGSN.

S5a: It provides the user plane with related control and mobility support between MME/UPE and 3GPP anchor.

It is FFS whether a standardized S5a exists or whether MME/UPE and 3GPP anchor are combined into one entity.

S5b: It provides the user plane with related control and mobility support between 3GPP anchor and SAE anchor. It is FFS whether a standardized S5b exists or whether 3GPP anchor and SAE anchor are combined into one entity.

S6: It enables transfer of subscription and authentication data for authenticating/authorizing user access to the evolved system (AAA interface).

S7: It provides transfer of (QoS) policy and charging rules from PCRF to Policy and Charging Enforcement Point (PCEP).
The allocation of the PCEP is FFS.

Sgi: It is the reference point between the Inter AS Anchor and the packet data network. Packet data network may be an operator external public or private packet data network or an intra operator packet data network, e.g. for provision of IMS services. This reference point corresponds to Gi and Wi functionalities and supports any 3GPP and non-3GPP access systems.

Protocol assumption:

- The interfaces between the SGSN in 2G/3G Core Network and the Evolved Packet Core (EPC) shall be based on GTP protocol.
- The interfaces between the SAE MME/UPE and the 2G/3G Core Network shall be based on GTP protocol.

4.3 Architecture for the evolved system –roaming cases

Editor's note: It is not the finalized architecture model for the evolved system. I.e. it does not contain all functions/interfaces required, and some functions/interfaces may be added, deleted or modified in the course of the key issue discussions.

Editor's note: The protocol assumed in each interfaces in the roaming cases shall be inline with the protocol assumption in the non-roaming case.

Resmed Corp. - Ex. 1037
Page 16

4.3.1 Scenario 1: Evolved packet core in the Visited network – Evolved packet core in the Home network

In this clause it is considered the high level target roaming architecture in case both the visited and the home networks are evolved Packet Core networks. Migration routes to this target roaming architecture are FFS. Two alternative architectures are shown, depending on whether UE traffic has to be routed to the HPLMN or not. It is FFS whether the two alternatives can be used in parallel by a UE, e.g. when only a part of the user's traffic has to be routed to the HPLMN.

In case UE traffic is routed to the home network, the SAE architecture is depicted in figure 4.3-1.

Editor's note: The update in clause 4.2 at SA2#52 on showing the split of the IASA into two functional entities, namely a 3GPP anchor and SAE anchor, requires the following figure to be updated. Whether the anchors are going to be separated is FFS. In particular, although the Home IASA is illustrated in the HPLMN, it is still an open issue whether the SAE anchor is located in the VPLMN. It is FFS how the above changes impact the SAE roaming architecture depicted below.

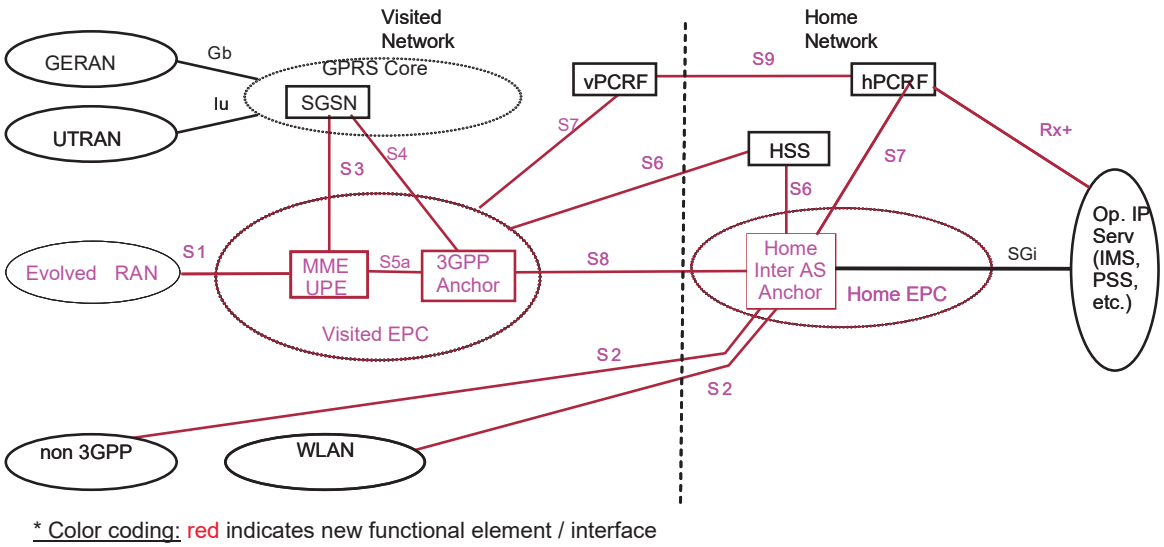

Figure 4.3-1: SAE Roaming architecture – Home routed traffic

For home routed user traffic the Inter AS Anchor is located in the HPLMN. Due to this reason, an interface between the Visited 3GPP Anchor and Home EPC is needed. This interface is referred to as S8.

The vPCRF is located in the VPLMN, while hPCRF is in the HPLMN.

Usage of S6, S8 and S9 for providing visited network with static/dynamic policies is FFS.

The 3GPP anchor, which anchors user plane for mobility between the 2G/3G access system and the LTE access system, is located in the VPLMN.

Note: It is FFS what is the functionality of the Home Inter AS anchor.

Note: It is FFS what is other functionalities of the 3GPP anchor in VPLMN besides user plane anchoring between 2G/3G access systems and LTE system.

It is FFS whether the Mobility anchor between 3GPP and non-3GPP access systems is provided by entities in the visited network or by the Home Inter AS Anchor.

The IASA in the home network remains the entity that terminates the IP Access Service.

In case UE traffic is not routed to the HPLMN, the SAE architecture is depicted in the following figure 4.3-2.

Resmed Corp. - Ex. 1037
Page 17

Editor's note: The update in clause 4.2 at SA2#52 that the split of the IASA into two functional entities, namely a 3GPP anchor and SAE anchor, requires the following figure to be updated. The decision to split the anchors is FFS.

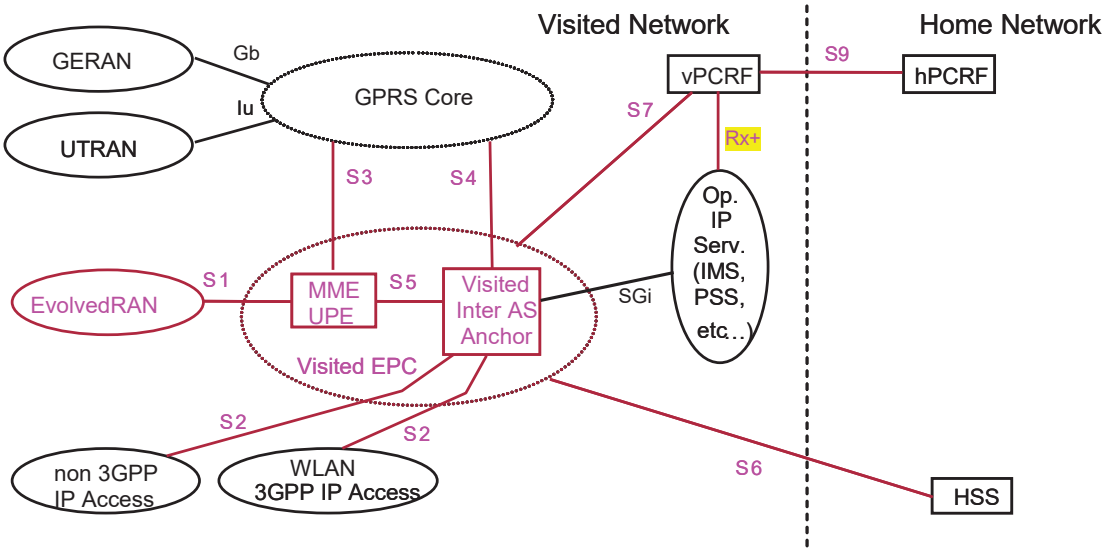

* Color coding: red indicates new functional element / interface

Figure 4.3-2: SAE Roaming architecture – Local Breakout

Usage of S6 and S9 for providing visited network with static/dynamic policies is FFS.

In the case it is decided that PCRF in the visited network is used, one alternative solution is that the enforcement of the Home PLMN policies (e.g.: QoS and charging policies) by the visited Inter AS Anchor is performed through the interaction of Home and Visited PCRF. Possibly, the Visited PCRF may add/modify policies according to those defined in the VPLMN. The related reference point between PCRFs is referred as S9.

Additional reference points for roaming scenarios (in addition to those described in clause 4.2)

S8: indicates the roaming variant of S5 reference point when the Inter AS Anchor is located in the HPLMN.

S9: indicates the roaming variant of the S7 reference point for the enforcement in the VPLMN of dynamic control policies from the HPLMN.

NOTE: S2 and S4 reference points could be interoperator when the GGSN/PDG and the Inter AS anchor belong to different PLMNs.

4.4 Architectural principles

The following architectural principles are agreed. Note that 'roaming' in this section refers only roaming between SAE networks.

Editor's note: The SAE architecture in section 4.2 and 4.3 need to be updated according to these principles.

- S10 interface between MME/UPE and MME/UPE will be standardized for MME/UPE relocation, which is functionally similar to S3 for inter 2G/3G LTE handover.

- For the roaming case with the local breakout, the e-PDG shall be in the visited network.
  For the roaming cases with home routed traffic, the e-PDG can be in the visited network when the visited network owns the I-WLAN or has a business relationship with the I-WLAN operator. It can be in the home network.

- For the roaming case with home routed traffic, there is a user plane entity for LI and CDR generation for non-3GPP access in the visited network.

Resmed Corp. - Ex. 1037
Page 18

- S6a between MME/UPE and HSS for authentication and authorization.
- S6b between SAE PDN gateway and HSS for authorization
- S6c between SAE MM anchor and HSS (as an AAA server) for mobility related authentication if needed.
- For S6a, S6b and S6c, they can be collapsed into one as a result of the collocated functions.
- It is desirable to specify the same protocols over S5(a/b) and S8.
- For non-roaming case, there is no open interface between SAE MM anchor and SAE PDN gateway. (see the possibly different definitions of SAE MM anchor and SAE PDN gateway in Annex I)

5 Requirements on the Architecture

Editors Note: This clause identifies the major requirements on the architecture that guide the architecture evolution.

High-level principles

1 3GPP and non 3GPP access systems shall be supported.

2 Shall provide scalable system architecture and solutions without compromising the system capacity, e.g. by separating the control plane and the transport plane.

3 Interworking with release 6 3GPP systems (i.e. 3GPP-PS core, 3GPP-IP access and IMS) shall be supported

4 The C plane response time for the IP-CAN shall be such that (excluding DRX times) the mobile can move from a fully idle state (this is an idle state where the mobile is GMM attached, has an IP address allocated and is IMS registered) to one where it is sending and receiving user plane data in a significantly reduced time. The target time is less than 200 ms;

5 The Evolved 3GPP System shall support SMS and equivalent functionality to that provided by the MSC's "SMS message waiting flag". Note: this might be provided by the R'7 WID for "support of SMS and MMS over generic 3GPP IP access".

6 The Evolved 3GPP System shall support basic IP configuration for terminals that do not have IP connectivity.

7 The functional split will be defined to sufficient level of detail to avoid overlapping/duplicated functionality, signalling and related delays.

8 The basic IP connectivity in the evolved architecture is established during the initial access phase of the UE to the network.

9 For the set-up of IP connectivity with enhanced QoS, the number of signalling transactions shall be minimised.

10 Mobility Management functionality shall be responsible of mobility within the Evolved 3GPP System and between the Evolved 3GPP System and different types of access systems.

11 The Evolved 3GPP Mobility Management solution shall be able to accommodate terminals with different mobility requirements (e.g.: fixed, nomadic and mobile terminals);

12 The Evolved 3GPP Mobility Management shall allow the network operator to control the type of access system being used by a subscriber.

13 Mobility procedures within the Evolved 3GPP System, between the Evolved 3GPP System and existing 3GPP Access Systems and between Evolved/Existing 3GPP access systems and non 3GPP access system shall provide seamless operations of both real-time (e.g. VoIP) and non real-time applications and services by, for example, minimizing the packet loss and interruption time.

14 The Evolved 3GPP system should allow route optimization by selecting or re-selecting the MME, UPE, 3GPP Anchor or SAE anchor so that the user plane traffic does not need to be tunneled outside the current network area . This applies in all roaming scenarios (e.g.: when both users are in a visited network) and some intra-

Resmed Corp. - Ex. 1037
Page 19

PLMN scenarios (e.g. serving UPE/IASA of the UE has been changed due to UE's mobility). This is desirable in order to prevent additional delay and unnecessary waste of backbone bandwidth. The policy rules of the home network should control whether or not local breakout is used.

15 In order to maximise users' access opportunities, the evolved architecture should allow a UE which is roaming to a VPLMN to use a non-3GPP access network with which the VPLMN has a business agreement. For example, it should be possible for a user to use a WLAN access network with whom only the visited operator has a direct relationship (not the home operator).

16 The Evolved 3GPP System shall support Ipv4 and Ipv6 connectivity. Interworking between Ipv4 and Ipv6 terminals, servers and access systems shall be possible. Mobility between access systems supporting different IP versions should be supported with minimum network/terminal impacts.

17 Subscriber security procedures in the Evolved 3GPP System shall assure (at least) the same security level as current 3GPP CS/PS networks;

18 Access to Evolved 3GPP System shall be possible via existing Rel 99 USIM. Evolved 3GPP System shall also permit access to inbound roamers from mobile networks with Rel 5 HSS;

19 The authentication framework should be independent from the specific access network technology;

20 The evolved 3GPP System shall ensure necessary support for the existing charging principles (e.g.: calling party pays) both at application and bearer level.

21 Transport overhead needs optimization, especially for the last mile and radio interfaces.

22 Signalling overhead on the radio interface should be minimised.

23 Radio interface multicast capability shall be a built-in feature.

24 Evolved system shall support IP multicast service which provides point to multipoint user data transport.

25 The SAE/LTE system shall at least support handling of regional subscription / regional roaming / access restriction (the terms are defined in 22.011). In case a regional subscription / regional roaming / access restriction applies, the network may provide the UE with guidance to find another tracking area / network.

26 The SAE/LTE system shall be able to handle the situation where the home operator changes a user's subscription such that it changes roaming restrictions.

27 Roaming etc restrictions shall not be more granular than Tracking Area (consideration for support of RAT specific restrictions needs to be made). SA1 needs to clarify the requirements on RAT specific restrictions.

28 Handling of roaming etc. restrictions for UEs in LTE_IDLE and LTE_ACTIVE state shall be aligned.

29 LTE/SAE shall support the same level of User Identity Confidentiality as today's 3GPP system (e.g. Idle mode signalling and attach/re-attach with temporary user identities)

30 The SAE/LTE system shall support network sharing functionality. Details need to be studied in RAN WGs and SA2.

31 The SAE/LTE system shall support redundancy concepts / load sharing of network nodes, e.g. similar to today's Iu-flex mechanisms. All nodes other than cell site node should be considered "distributed resources utilising load sharing/redundancy mechanisms".

32 The SAE/LTE system shall provide effective means to limit signalling during inter-RAT cell-reselection in LTE_IDLE state. For example, similar performance to that of the "Selective RA Update procedure" defined in TS 23.060. Optimisation for movement to/from states such as URA-PCH and GPRS-Standby shall be studied.

33 It shall be possible to support service continuity between IMS over SAE/LTE access and the CS domain. It shall be achieved with minimum impact on the CS domain.

34 It shall be possible to support IMS and its communication services over SAE/LTE access, including the support of calls between IMS over SAE/LTE access and the CS domain.

35 It shall be possible for the operator to provide the UE with access network information pertaining to locally supported 3GPP and non-3GPP access technologies. The access network information may also include operator

Resmed Corp. - Ex. 1037
Page 20

preferences based on locally available 3GPP and non-3GPP access technologies, and the information may be restricted to the access technologies or access networks the UE can use.

36 It shall be possible to perform Lawful Intercept for both roaming and non-roaming users for all access systems the user are allowed to use.

37 The mobility management shall be able to provide location hiding capabilities without increasing system complexity. The location hiding capabilities may be provided differently per operator (e.g. applied for all users, only for the required users, not required at all). The mobility management shall also be able to enable location privacy protection when to users who require this privacy service, and in this case local breakout and route optimization support might be disabled.

38 The mobility management between 3GPP and non 3GPP access systems should have minimum impact on the access technologies and it should be independent from transport technologies.

39 The mobility management shall support the anchoring of traffic for a UE within a SAE CN node to allow charging and other service enabling functions to be performed. This does not preclude the possibility to change the SAE CN nodes to allow route optimization.

40 It shall be possible to be compatible with the existing 3GPP roaming interfaces when SAE interworks with pre-SAE/LTE network.

41 The mobility management is provided without degrading the current 3G security level. This means both control signalling and user data are securely transported. It is desirable that the mobility management entity for LTE access is not directly addressable by the UE.

Editor's note: Initial list to be completed.

6 Scenarios and Solutions

Editors Note: This clause identifies potential scenarios based on drivers such as social and new emerging technologies that have an impact on the existing reference architecture. The identified scenarios are used to explore the architecture options and as a base for identifying the key architectural issues. The scenarios may be based on the outcome from AIPN in SA1 and the TSG-RAN's Study Item on Radio Evolution (see SP-040915). The scenarios should identify how migration and/or evolution from current systems occur.

7 Key Architectural Issues

Editors Note: This clause identifies key issues e.g. related to mobility and QoS mechanisms, solutions for key Issues and impact on the Architecture i.e.

7.1 Key Issue 1

7.1.1 Description of Key Issue 1

7.1.2 Solution for key issue 1

7.1.3 Impact on the baseline CN Architecture

7.1.4 Impact on the baseline RAN Architecture

7.1.5 Impact on terminals used in the existing architecture]

Resmed Corp. - Ex. 1037
Page 21

7.1 Key Issue Policy control and Charging

7.1.1 Description of Key Issue Policy control and Charging

The PCC functionality comprises important functionality related to the configuration of certain filters and packet processing rules. Typical use of such rules and filters include flow based charging, gating, QoS control, etc. Such rules may implement multiple services of various types, including ones from 3rd party suppliers and hence are an important part since it is related to a subscription and how services are authorized and charged for e.g. zero rating, price bundling, premium price etc depending on the particular configuration of an operator. In a Rel-7 context PCC considers a number of input parameters such as QoS parameters and for GPRS case TFTs and if a PDP context was activated by a secondary PDP context activation procedure, etc. before finally implementing a rule. It is key for an operator to be able to use a configuration of rules (policy and charging), which apply to Rel-7 architecture and terminals also in long term, i.e., smooth migration is important. The PCRFs interaction with future CN should be based on the existing PCC Rel-7 interfaces. It should be noted that some Rel-7 models (e.g. the QoS model) may be further evolved in the SAE work.

With the introduction of new 3GPP radio access technologies operators need to be in control of the use of each 3GPP radio access technology. The policy should take subscriber identity and other circumstances into account. The use of a different radio access technology may also lead to changes in other policies, e.g. different rating, etc.

7.1.2 Solution for key issue Policy control and Charging

- It shall be possible to inform the PCRF what radio access technology a subscriber is utilizing since depending on operator configuration it may influence what policy control and charging rule is being activated by a PCRF.
- The PCC interfaces already defined in Rel-7 shall be used as a basis in an SAE context and may be evolved to meet SAE requirements.

Editors Note: In a B1 context, cf. Annex B, the enforcement point of the mobility anchor that resides in the core network shall be controlled by a PCRF. In a B2 context, it is FFS if the Inter AS-MM shall contain an enforcement point that is controlled by a PCRF. Alternatively in a B2 context, it is FFS how the interaction between the PCRF(s) and IP Gateways is performed in Inter Access System Handover.

- The PCC functionality shall in an effective way be able to handle different QoS models cf. e.g. I-WLAN vis-à-vis WCDMA.

7.1.3 Impact on the baseline CN Architecture

The PCC functionality shall be evolved from the existing Rel-7 PCC interfaces.

It shall be possible to inform the baseline CN architecture what radio access technology (including an evolved RAN) is being used by a subscriber.

7.1.4 Impact on the baseline RAN Architecture

In case the baseline RAN architecture support multiple RAN access technologies it may be needed to inform the PCRF what radio access technology a subscriber is utilizing including an evolved RAN access technology.

7.1.5 Impact on terminals used in the existing architecture

Editors Note: It is FFS whether there is any particular terminal impact from the evolution of Policy control and Charging architecture. However at the moment no particular terminal impact has been identified.

7.2 Key Issue- Roaming with Local Breakout

7.2.1 Description of Key Issue – Roaming with Local Breakout

Roaming is when users receive service when they are in a VPLMN, i.e. in a network other than their HPLMN.

Resmed Corp. - Ex. 1037
Page 22

Local breakout might optimize access to visited network services and might allow for user plane traffic route optimization. Control plane traffic may also break out locally for emergency services or to obtain better signalling performance and better user experience. In this clause it is clarified which interfaces are the roaming interfaces, and how roaming and local breakout works in general for the evolved architecture.

7.2.2 Solution for key issue – Roaming with Local Breakout

Roaming of subscribers (to different VPLMNs and to different types of VPLMN access) requires certain policies from the home operator to be available in the Visited network. This information may be downloaded or it may be pre-configured and used during the subscriber access to the visited network. These policies may be static, dynamic or a combination.

In order to provide high performance as well as real time services for roaming customers, efficient routing of user data or media traffic is required. For some services, e.g. emergency services, Control plane traffic may also break out locally. Features shall be provided to the home operator to negotiate with the visited operator:

- if the traffic of the user is always transported to the home network over a roaming interface or broken out locally for transport towards the destination;
- and, if the default IP address (i.e. the IP address from PDN address space to access PDN) can be allocated by the visited PLMN or not.

Furthermore, it should be possible to perform local breakout for some traffic of the user but not the other traffic. How to accomplish this is FFS.

Such policies shall be based on the home operator's preference and have a granularity such that the gain justifies the roaming infrastructure and complexity in operations for such a set up.

The IP Gateway (defined as GW in the context of current Policy and Charging Control work) in a VPLMN may connect to multiple HPLMNs. The IP Gateways in the VPLMN serves to enforce the policies and charging as negotiated between the visited and home operators. The result of the enforcements and the information of charging should be provided to the home operator when required.

Using the policy enforcement function in the IP Gateway in the visited network, home operators can control routing of traffic for roaming users. The IP Gateway in the HPLMN serves as a global mobility anchor point and at the same time enforces the policies of, and the charging for the home operator. This IP Gateway can provide session continuity, even if the VPLMN changes.

In order to support return traffic optimization for the roaming user, the roaming user should use an IP address belonging to the VPLMN. On the other hand, in order to attain session continuity when roaming from HPLMN to VPLMN, the user should keep using the IP address that is assigned by HPLMN. Mobility management protocol should be aware of this so that it can support local breakout for roaming users.

Editor's Note: Roaming with UTRA system needs additional evaluation.

Editor's Note: Further refinement of the architecture will need to be performed to allow the concept to be further elaborated and evolved.

Editor's Note: The User plane interface and the AAA interface in roaming case needs to be defined for 3GPP access System and non 3GPP access System.

7.2.3 Impact on the baseline CN Architecture

The role of current nodes/functions (e.g. PCRF in the baseline architecture) and IP Gateway as well as the relationship with 3GPP HSS/AAA are FFS.

7.2.4 Impact on the baseline RAN Architecture

No impact currently foreseen.

Resmed Corp. - Ex. 1037
Page 23

7.2.5 Impact on terminals used in the existing architecture

FFS.

7.3 Tracking Area

7.3.1 Description of issue

In GSM, mobiles are tracked in Location Areas and Routeing Areas. In UMTS, mobiles can be tracked in UTRAN Registration Areas as well as Las and Ras. Within this Technical Report, Tracking Area is used as a generic name for LA, RA and URA.

Within the LTE/SAE work, there has been debate about how many levels of Tracking Area there should be.

7.3.2 Agreements on Tracking Area Issues

It is agreed that:

- There is only one common Tracking Area concept defined for RAN and CN in LTE/SAE.
- The location of a UE in LTE_IDLE is known by the network on a Tracking Area granularity.
- A UE in LTE_IDLE is paged in all cells of the Tracking Area in which it is currently registered.
- In order to avoid excessive Tracking Area update signalling within LTE, for terminals located on a Tracking Area border, the following solutions should be considered (detailed solutions are FFS);

  a) Allow one LTE cell to belong to multiple Tracking Areas, and allow the Tracking Areas to partially overlap each other

  b) Support the allocation of multiple Tracking Areas to the same terminal.

Resmed Corp. - Ex. 1037
Page 24

7.4 Radio Access Network – Core Network Functional Split

This clause describes the allocation of functions to either the RAN or the CN.

Table 1: RAN-CN functional split

Location: High-level Function:	EnodeB	Above EnodeB	Comments
Radio resource management	X		
Policy Decision		X	
Admission/commitment of requested or downgrade to available radio resources	X		Includes appropriate RAN capabilities and RAN transport resources
Admission/commitment of network resources		X	Transport network resources outside RAN
Authorisation of QoS based on subscription/service		X	
Uplink packet Classification			Done by UE.
Uplink packet re-classification based on operator administered subscriber policies		X	
Uplink packet re-classification based on subscription independent serving operator policies for the transport	X		If needed and visible. E.g. Mapped from radio bearer.
Uplink QoS policy enforcement of negotiated QoS	X		E.g. by scheduling. (does not include packet marking, QoS Authorisation).
Downlink packet classification		X	Does not include radio QoS (by definition done in RAN).
Downlink QoS policy enforcement of negotiated QoS		X	
Attach, Subscriber & Key Management, Authentication and Authorisation		X	
Location management, Paging, Intra-radio access mobility in LTE_IDLE			
- Indicate cell information (PLMN-ID, tracking area-ID, radio parameters) to UE for cell/PLMN selection in LTE_IDLE	X		It is FFS if the PLMN-ID should be subdivided.
- Accept/deny UE's location (tracking area) in LTE_IDLE		X	In the case of MOCN shared network configuration, each CN operator must be able to configure its own roaming agreements.
- Store UE's location (tracking area) in LTE_IDLE		X	For paging inactive Ues and for recovery
- Initiation (trigger) of Paging of LTE_iDLE Ues within tracking area		X	
- Local Storage of subscriber information about allowed PLMNs and location restrictions within PLMN		X	To decide on tracking areas allowed for UE/user
Radio channel coding	X		
Integrity protection terminating in UE			
- For user plane data	-	-	As yet, not required to be provided by the "access system".
- For CN signalling		X	
- For RAN signalling	FFS		Same as the location of the RAN signalling termination.
Ciphering terminating in UE			
- For user plane data		X	
- For CN signalling		X	
- For RAN signalling	If needed		The requirements for RAN signalling encryption need to be clarified.
IP Header compression between UE and network		X	It is agreed that, within the network, IP Header Compression is performed in between the User Plane Encryption functionality and the Flow Based Charging functionality.
Intra-radio access mobility in LTE_ACTIVE			
- Determine allowed tracking areas and PLMNs for handover in LTE_ACTIVE		X	Derived from subscription and provided to RAN.

Resmed Corp. - Ex. 1037
Page 25

Location: / High-level Function:	EnodeB	Above EnodeB	Comments
- Guiding the measurement process within UE for handovers in LTE_ACTIVE	FFS	FFS	Same as the location of the RAN signalling termination.
- Decision for intra access system handover in LTE_ACTIVE	FFS	FFS	Same as the location of the RAN signalling termination.
- Path switch/mobility anchor for intra access system handover in LTE_ACTIVE		X	
- Support for lossless HO (E.g. Downlink duplication, Packet forwarding or Anchor)	FFS	FFS	If needed, check requirements with SA1
- Support for seamless HO (E.g. Downlink duplication, packet forwarding or Anchor)	FFS	FFS	Sufficiently good for voice HO
- Transfer of UE specific contexts for handover of LTE_ACTIVE Ues	FFS	FFS	
Radio protocols (HARQ, scheduling etc.)	X		
Charging		X	
IP Address Allocation		X	
Roaming		X	
Local breakout		X	
Inter-Radio Access mobility, (3GPP <> 3GPP RAT) in LTE_ACTIVE			
- Determine tracking areas and PLMNs allowed for handover in LTE_ACTIVE		X	Derived from subscription
- Guiding the measurement process within UE for handovers in LTE_ACTIVE	FFS	FFS	Same as the location of the RAN signalling termination.
- Decision for inter access system handover in LTE_ACTIVE	FFS	FFS	Based on measurements and potentially resource availability, blind handover could also be possible. Same as the location of the RAN signalling termination.
- Path switch/mobility anchor for inter access system handover in LTE_ACTIVE		X	
- Transfer of UE specific contexts for handover of LTE_ACTIVE Ues	FFS	FFS	GRPS core and LTE MME/UPE need to exchange UE specific data for both CN specific context and Radio specific information.
Inter-Radio Access mobility, (3GPP <> non-3GPP RAT) in LTE_ACTIVE			FFS in SA2, includes e.g. I-WLAN
Inter-Radio Access mobility (3GPP <> 3GPP RAT) in LTE_IDLE			UTRAN, eUTRAN and GERAN
- Indicate cell information (PLMN-ID, tracking area-ID, radio parameters) to UE for cell/PLMN selection in LTE_IDLE	X		
- Accept/deny and store UE's location (tracking area) in LTE_IDLE		X	
- Initiation of Paging of LTE_IDLE Ues within tracking area		X	
- Local Storage of subscriber information about allowed PLMNs and location restrictions within PLMN		X	To decide on tracking areas allowed for UE/user
Inter-Radio Access mobility (3GPP <> non-3GPP RAT) in LTE_IDLE			FFS in SA2, includes e.g. I-WLAN
Access system selection	FFS	X	
Load sharing among RATs			Solutions for load sharing among RATs are FFS.
Lawful intercept		X	
Positioning	X	X	
Flow Control and buffering	FFS	FFS	If Needed
MBMS	X	X	

NOTE 1: Packet Re-classification and QoS Enforcement at operator interconnect are done in CN if needed.
NOTE 2: transcoding has been considered and the conclusion is that it is handled on the Application level (IMS), and hence not in RAN or CN.
NOTE 3: The function "reporting of unsent data volume" has been discussed. It has been agreed that there are no clear requirements to have this function included in the RAN-CN functional split table at this point. It can be added to the table and supported in the Evolved Architecture if sufficient reasons, e.g. significant charging impacts, are presented later on.

Resmed Corp. - Ex. 1037
Page 26

7.5 Key Issue Inter 3GPP Access System Mobility in Idle State

7.5.1 Description of Key Issue Inter 3GPP Access System Mobility in Idle State

Idle State Inter 3GPP Access System Mobility functionality maintains the registration of a user/UE in the serving 3GPP Access System so that mobile originated and mobile terminated packet transfer may be initiated. In Idle State the UE reselects between SAE/LTE and other 3GPP access systems. Furthermore, Idle State Inter 3GPP Access System Mobility updates within the network any user plane routing and any potential tunnelling information so that data path is established between intersystem mobility anchor and the UPE of the 3GPP Access System the UE is registered with.

Idle State Inter 3GPP Access System Mobility maintains subscriber identity confidentiality, i.e. temporary user identities are used where necessary.

7.5.2 Solution for key issue Inter 3GPP Access System Mobility in Idle State

Editor's note: Whether a UE can be registered in more than one 3GPP access system at one time and the possible effects on SAE/LTE is FFS.

7.5.2.1 Alternative Solution A

7.5.2.1.1 General

The SAE/LTE 3GPP Access System has an MME (FFS whether in RAN or CN). The corresponding 2G/3G MME is the SGSN. Furthermore, the SAE/LTE 3GPP Access System has a UPE. The corresponding 2G/3G UPE is the SGSN or SGSN/GGSN. The UE registers with the MME and UPE of the selected 3GPP Access System. The MME of the 3GPP Access System stores a UE contexts, e.g. permanent and temporary user identities, mobility state, tracking area. The UPE of the 3GPP Access System stores a UE context, e.g. parameters of the basic IP bearer service, keeps network internal routing information. The MME can store the UE context for long to allow for detach and reattach with temporary identity (user identity confidentiality). The UE is only in one 3GPP access systems registered at one time and not at multiple in parallel.

The SAE/LTE 3GPP Access System combines network attach and establishment of basic IP bearer capabilities (always on), i.e. all parameters required for a best effort IP bearer service are allocated for the UE. In idle state all data transfer resources between UE and network are released and only information for basic IP bearer is stored in the network. There is a simple, preferably unique, mapping between 2G/3G and SAE IP bearer parameters

According to 2G/3G and LTE idle state definitions the UE (re-)selects cells and also access systems. The change of the access system in idle state triggers a network registration by the UE. It is FFS whether this is triggered by different tracking areas for different access systems or by other information.

User identity confidentiality requires the UE to register the access system change with the network using a temporary identity. The temporary identity is resolved to a permanent identity by the old serving MME. This information transfer between old and new serving MME transfers also other UE context information like security parameters and IP bearer parameters to the new serving MME/UPE. The UE context transfer is preferred as it is typically faster than establishing security association and IP bearer again in another access system.

7.5.2.1.2 Alternative Solution A1

In the information flow below MME and UPE are shown together in the first case, for simplicity reasons.

NOTE: This does not preclude a separation. Two independent entities require an interface between both for example for paging, then registration between each other and double context transfer.

In the second case, MME, UPE and Inter AS Anchor are shown together as another option.

The routing between UPE and intersystem mobility anchor is updated, which is the precondition for being able to page the UE when downlink data arrive. For change from 2G/3G to SAE/LTE case, establishment of basic IP bearer capabilities (always on) (i.e. all parameters required are allocated to the UE) is performed during the change procedure

Resmed Corp. - Ex. 1037
Page 27

if no basic IP bearer exists before change. The home register (e.g. HSS) is updated with registration of the UE at another MME/UPE. This scenario is shown in the figure 7.5-1.

This solution is also covering the case when the MME/UPE and the Intersystem Mobility Anchor is co-located (see step 10 of the signalling flow), see figure 7.5.1.a. In this case the routing between UPE and intersystem mobility anchor updates do not require standardised mechanism.

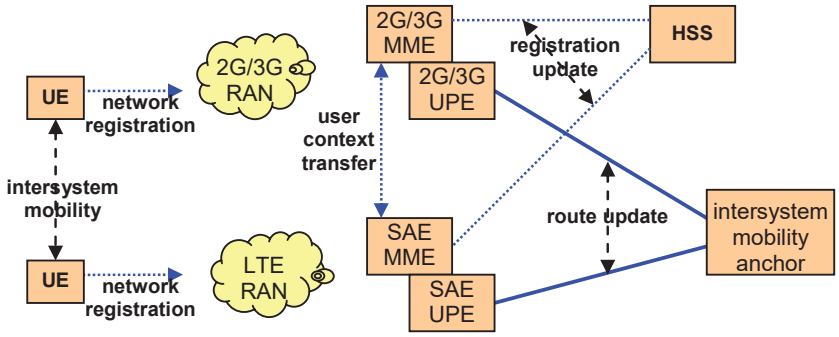

Figure 7.5-1: 3GPP Inter Access System Change between SAE/LTE and 2G/3G

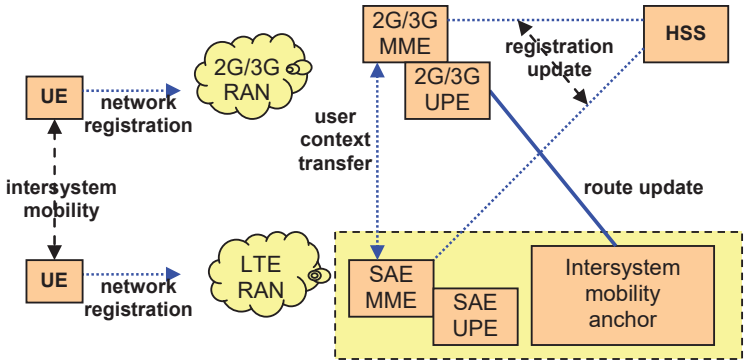

Figure 7.5-1.a: 3GPP Inter Access System Change between SAE/LTE and 2G/3G (MME/UPE/IASA collocated)

Resmed Corp. - Ex. 1037
Page 28

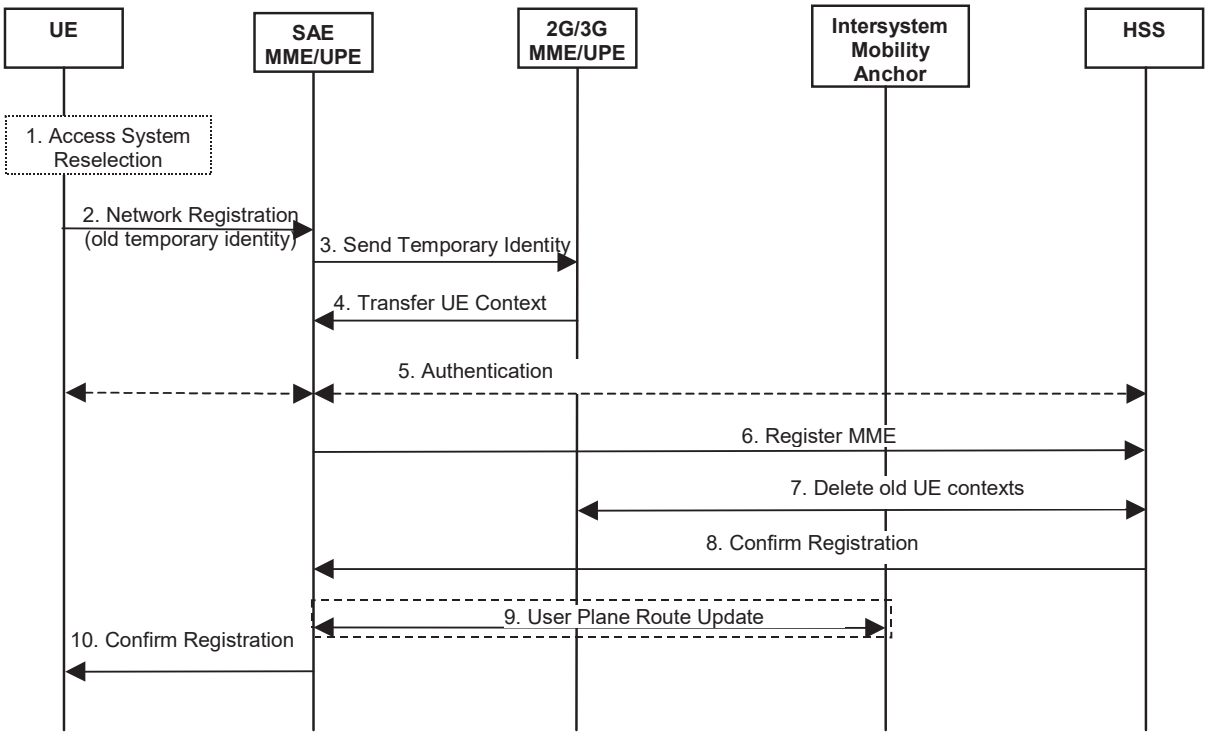

Figure 7.5-2: Information flow for change in idle state from 2G/3G to SAE/LTE

1) The UE in idle state re-selects a different 3GPP access system.

2) The access system reselection triggers a network registration by the UE and sends its temporary identity and potentially its old tracking area or another parameter identifying the old MME/UPE to the new MME/UPE.

3) The new MME/UPE derives an address of the UE's old MME/UPE from the parameters sent by the UE. The new MME/UPE sends the UE parameters to the old MME/UPE.

4) The old MME/UPE sends a UE context to the new MME/UPE. The UE context includes a permanent user identity and other information, e.g. security and IP bearer parameters.

5) The user/UE may be authenticated in the new MME/UPE.

6) The new MME/UPE derives from the permanent user identity an HSS address and registers itself as the MME/UPE serving the user at the HSS.

7) The HSS deletes the UE context in the old MME/UPE.

8) The HSS confirms the registration of the new MME/UPE.

9) The new MME/UPE updates the route from the intersystem mobility anchor to itself. Mobile terminated packets arrive at the new MME/UPE. In case the MME/UPE and the Intersystem Mobility Anchor is collocated this step is not required.

10) The new MME/UPE confirms the UE's network registration and allocates a new temporary identity to the UE.

For change in Idle State from SAE/LTE to 2G/3G the same information flow is applicable with a changed order of MME/UPE entities.

Editor's Note: The above solution does not cover inter-system mobility for Ues in URA-PCH. It is highly desirable to support signalling optimisations for Ues in URA-PCH state as well. Solutions are FFS.

Resmed Corp. - Ex. 1037
Page 29

7.5.2.1.3 Alternative Solution A2

In this solution, the SAE UPE contains the mobility anchor function for inter-3GPP access systems to handle mobility between 2G/3G and SAE. The location of the mobility anchor function for 3GPP to non-3GPP access system does not impact this solution, since this solution is for mobility between 3GPP access systems.

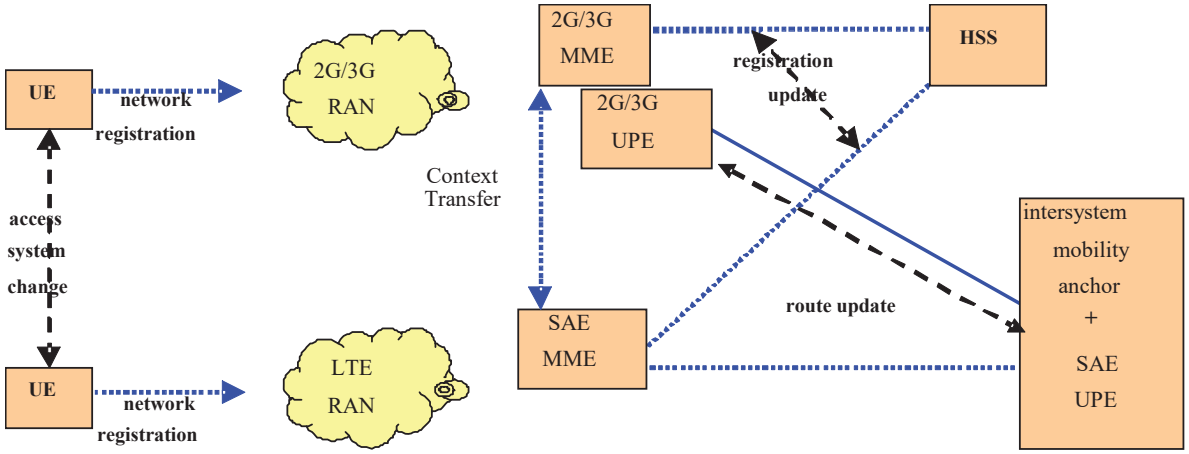

Figure 7.5-3: 3GPP Inter Access System Change between SAE/LTE and 2G/3G for Solution A2.

When an SAE-capable UE in IDLE mode is attached in 2G/3G and then selects an LTE cell, the UE initiates a Tracking Area Update. The 2G/3G MME treats this as an inter-SGSN routing area update as shown in the following figure.

It is assumed that a SAE-capable UE always uses an SAE UPE instead of a 2G/3G GGSN in order to meet the goal of simplification.

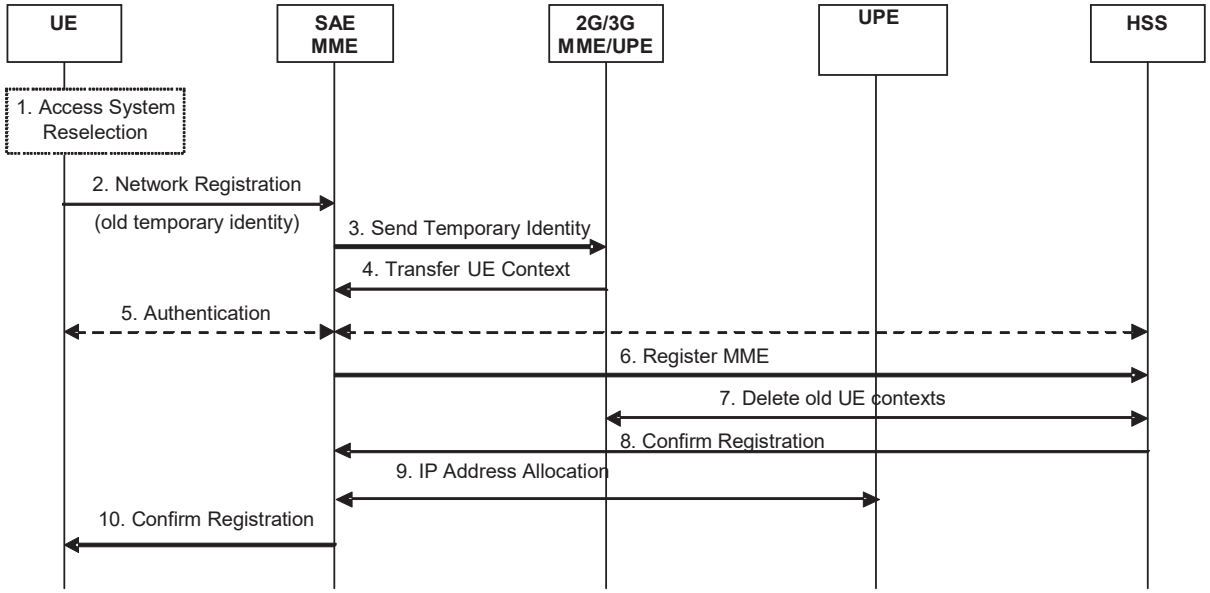

Figure 7.5-4: Information flow for change in idle state from 2G/3G to SAE/LTE

1) The UE in idle state re-selects a different 3GPP access system.
2) The access system reselection triggers a network registration by the UE and sends its temporary identity and potentially its old tracking area or another parameter identifying the old MME/UPE to the new SAE MME.
3) The new SAE MME derives an address of the UE's old MME from the parameters sent by the UE. The new SAE MME sends the UE parameters to the old MME.

Resmed Corp. - Ex. 1037
Page 30

4) The old MME sends a UE context to the new SAE MME. The UE context includes a permanent user identity and other information, e.g. security and IP bearer parameters.
5) The user/UE may be authenticated in the new SAE MME.
6) The new SAE MME derives from the permanent user identity an HSS address and registers itself as the MME serving the user at the HSS.
7) The HSS deletes the UE context in the old MME/UPE.
8) The HSS confirms the registration of the new SAE MME.
9) The MME provides the UPE with information to configure the user plane. In case an IP Bearer is not already established for the UE in 2G/3G network, the new SAE MME initiates an IP address allocation from the UPE. The UE is now known in the UPE.
10) The new SAE MME confirms the UE's network registration and sends a new temporary identity to the UE. Mobile terminated packets arrive at the UPE. If a new IP address has been allocated in step 9, it is provided to the UE.

Editor's Note: The above solution does not cover inter-system mobility for Ues in URA-PCH. It is highly desirable to support signalling optimisations for Ues in URA-PCH state as well. Solutions are FFS.

7.5.2.1.4 Impact on the baseline CN Architecture

The baseline CN architecture needs to be able to address SAE MME/UPEs and to perform context transfer with 2G/3G MME/UPEs. In case of Gn procedures, the user plane between 2G/3G UPE and SAE UPE and the signalling plane between 2G/3G MME and SAE MME can be accomplished based on GTP-U and GTP-C protocols respectively with enhancements.

7.5.2.1.5 Impact on the baseline RAN Architecture

The baseline RAN architecture may support the UE in Idle State re-selection of the SAE/LTE 3GPP Access System.

7.5.2.1.6 Impact on terminals used in the existing architecture

Editor's Note: It is FFS whether there is any particular terminal impact.

7.5.2.2 Alternative Solution B

7.5.2.2.1 Description

Editor's note: Whether a UE can be registered in more than one 3GPP access system at one time and the possible effects on SAE/LTE is FFS.

The proposed solution implements a loose interworking between SAE/LTE and 2G/3G, since the interconnection between the two access systems is realized at user-IP layer (over Gi interface, for the legacy system) via Mobile IP protocol. Terminating IP traffic is routed correctly to the UE that has moved from SAE/LTE to 2G/3G (and vice-versa) via Mobile IP.

It is FFS whether MIP v4,MIPv6 or Proxy MIP is used.

The SAE/LTE network is seen as an external IP network for 2G/3G, and vice-versa: for this reason the inter 3GPP access system mobility mechanisms apply also to mobility between 3GPP and non 3GPP access systems.

Intra-system mobility is handled in each access system according to its own network-based mechanisms (e.g. GTP for 2G/3G). Each Access System is regarded as an *edge domain,* i.e. a PLMN domain within which the UE acquires and keeps the same IP address (IP_{edge}) and where the UE's movements are handled using a local mobility management protocol (e.g. NETLMM [12]). It is FFS how different 3GPP access systems can be managed within a single edge domain. Since the UE keeps the same IP_{edge} address, the network-based mobility protocol properly updates routing information towards a local user plane anchor point (Local Mobility End Point, L-MEP) so that all packets destined to IP_{edge} address are correctly routed towards the moving UE.

Any mobility event across the *edge domains* (i.e. 2G/3G GPRS network and SAE/LTE network) is handled by anchoring the UE traffic to a fixed anchor (inter-domain anchor, or Global Mobility End Point, G-MEP). The G-MEP

Resmed Corp. - Ex. 1037
Page 31

can be located in the home or in the visited network depending on IP bearer service requirements (i.e. whether the global IP address needs to be assigned by the visited or by the home network). In order to perform this, two different IP addresses will be associated to the UE: the IP_{Edge} address, belonging to the L-MEP subnet, and an IP address belonging to the subnet of the G-MEP (IP_{Global}). The IP_{Globa} address is the address known at application level, used by the UE to communicate with corresponding nodes, valid for all the session duration: since it doesn't change at access system change (only IP_{Edge} does), it guarantees session continuity. A global mobility protocol takes care of updating the route from the G-MEP to the correct L-MEP, associating each new acquired IP_{Edge} address to the IP_{Global} address. When MIP is used as global mobility protocol, G-MEP is the Home Agent, IP_{Edge} is the Care-of-Address (CoA) and IP_{Global} is the Home Address.

For the SAE/LTE 3GPP Access System, L-MEP corresponds to the "user plane anchor" for Intra LTE mobility case, as depicted in fig. 7.7-1, sec. 7.7.2. The L-MEP is located in the SAE packet core of the PLMN the UE is currently attached to. An example of suitable network-based mobility protocol can be found in NETLMM [12]. The L-MEP could be co-located with UPE, except when privacy requirements apply.

For the 2G/3G Access system, the L-MEP corresponds to the GGSN and the network-based mobility protocol is GTP. The corresponding 2G/3G UPE is the GGSN.

The SAE/LTE 3GPP Access System has an MME (FFS whether in RAN or CN). The corresponding 2G/3G MME is the SGSN.

The UE registers with the MME/UPE and the user plane anchor point of the selected 3GPP Access System, obtaining an IP_{Edge}. The MME/UPE of the 3GPP Access System stores a UE contexts, e.g. permanent user identities, mobility state, tracking area. The UE (based on configuration options or on a specific request from the network) sends a MIP Registration Request to the inter-domain anchor (Home Agent) to bind its current IP_{Edge} address (CoA) to the IP_{Global} address (HA). The IP_{Global} can be a static or a dynamic IP address.

The 2G/3G UPE of the 3GPP Access System stores a UE contexts, e.g. parameters of the basic IP bearer service, keeps network internal routing information. The UE is only in one 3GPP access systems registered at one time and not at multiple in parallel.

According to 2G/3G and LTE idle state definitions the UE (re-)selects cells and also access systems. The change of the Access System in idle state triggers a network attach by the UE. It is FFS whether this is triggered by different tracking areas for different access systems or by other information.

The SAE/LTE 3GPP Access System combines network attach and establishment of basic IP bearer capabilities (always on), i.e. all parameters required for a best effort IP bearer service are allocated for the UE. In idle state all data transfer resources between UE and network are released and only information for basic IP bearer is stored in the network. There is a simple, preferably unique, mapping between 2G/3G and SAE IP bearer parameters

A global mobility protocol takes care of updating the inter-domain user plane anchor with the IP address acquired by the UE in the new Access System. The routing between the new local user plane anchor and intersystem mobility anchor is updated, which is the precondition for being able to page the UE when downlink data arrive. And, the home register (e.g. HSS) is updated with registration of the UE at another MME/UPE. These functions are shown in the figure 7.5-5.

Inter 3GPP Access Mobility in LTE idle is performed with a re-attach based scheme (no context transfer).

Resmed Corp. - Ex. 1037
Page 32

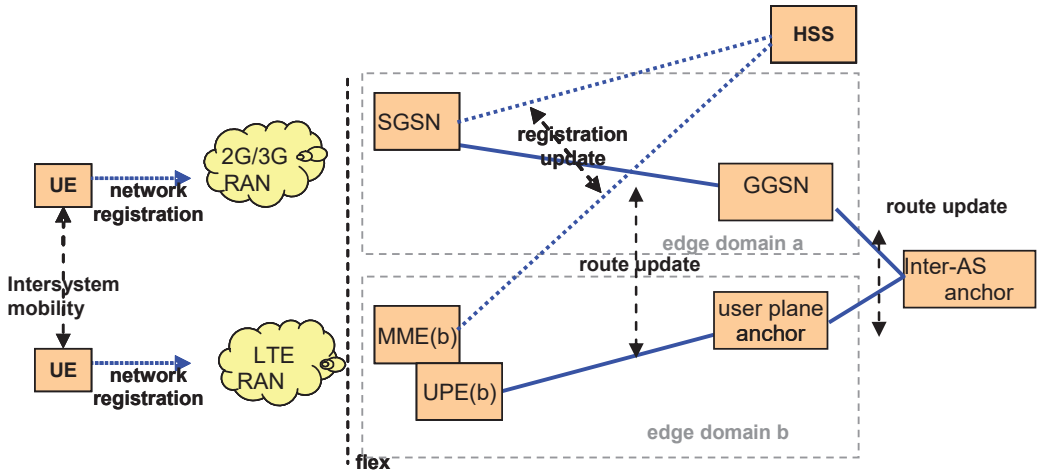

Figure 7.5-5: 3GPP Inter Access System Change between SAE/LTE and 2G/3G

The message sequence in figure 7.5-6 illustrates the high-level procedures for this solution alternative. In the information flows below, MME and UPE/user plane anchor are shown together for simplicity reasons. This does not preclude a separation.

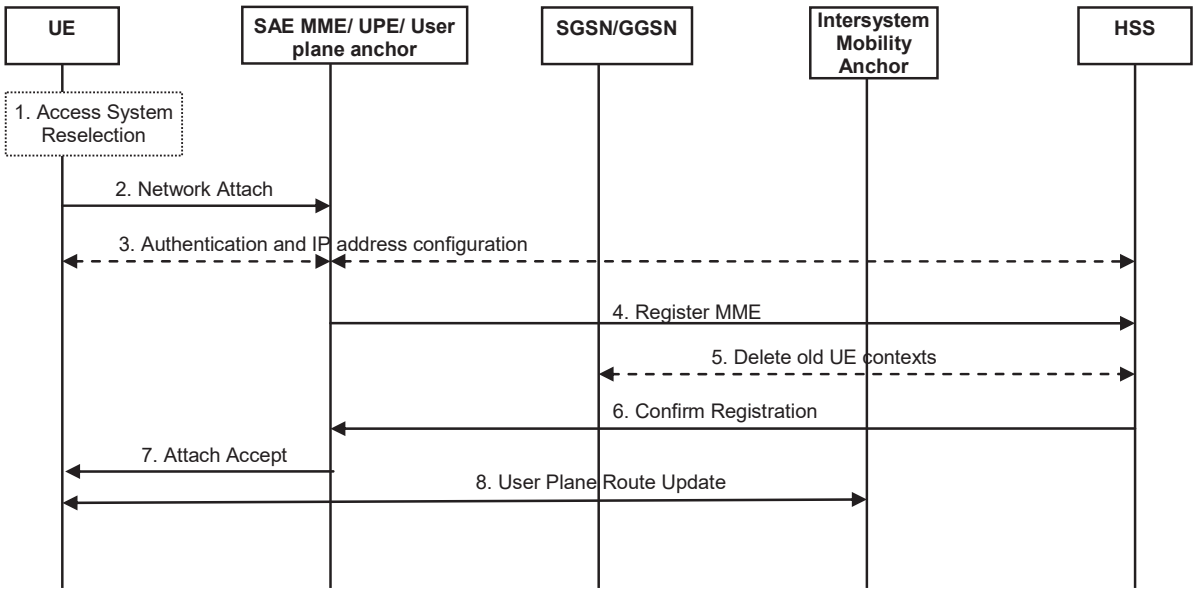

Figure 7.5-6: Information flow for change in idle state from 2G/3G to SAE/LTE

1) The UE in idle state re-selects a different 3GPP Access System.

2) The Access System reselection triggers a network attach by the UE.

3) The UE is authenticated in the new MME/UPE. As a result of a successful authentication, the UE gets an IP address belonging to the subnet of the user plane anchor (IP_{Edge}). For routing optimization purposes the user plane anchor can be co-located with the UPE.

4) The new MME/UPE registers itself as serving the UE in the HSS.

5) The UE contexts in the old MME/UPE (SGSN and GGSN) may be deleted by an explicit network request, or after a timer expires.

6) The HSS confirms the registration of the new MME/UPE.

7) The new MME/UPE confirms the UE's network registration.

Resmed Corp. - Ex. 1037
Page 33

8) The intersystem mobility anchor is updated with the IP_{Edge} address. This step can be based on MIPv4, RFC 3344 [10] or MIPv6, RFC 3775 [11]. In case MIPv6 is used, the UE sends a MIP Registration request to the Intersystem mobility anchor (Home Agent), with IP_{Edge} as a CoA. Terminating packets from the intersystem mobility anchor will be tunneled towards the user plane anchor. The tunnel can terminate on the terminal (MIPv6 or MIPv4 with FA co-located mode) or on the user plane anchor (MIPv4 with FA located mode).

A similar flow applies for the change in idle state from SAE/LTE to 2G/3G.

In order to avoid Mobile IP impacts on the 2G/3G part of dual mode Ues and reduce air interface signalling, Proxy MIP could be used for idle mobility management between EUTRAN and UTRAN/GSM.

When Proxy MIP is used into the architecture, the proxy MIP node should be included in SGSN/GGSN and User plane anchor. In this case user plane route update could be initiated by Proxy MIP node. Inter 3GPP access Mobility management in LTE idle is performed as Figure 7.5-7.

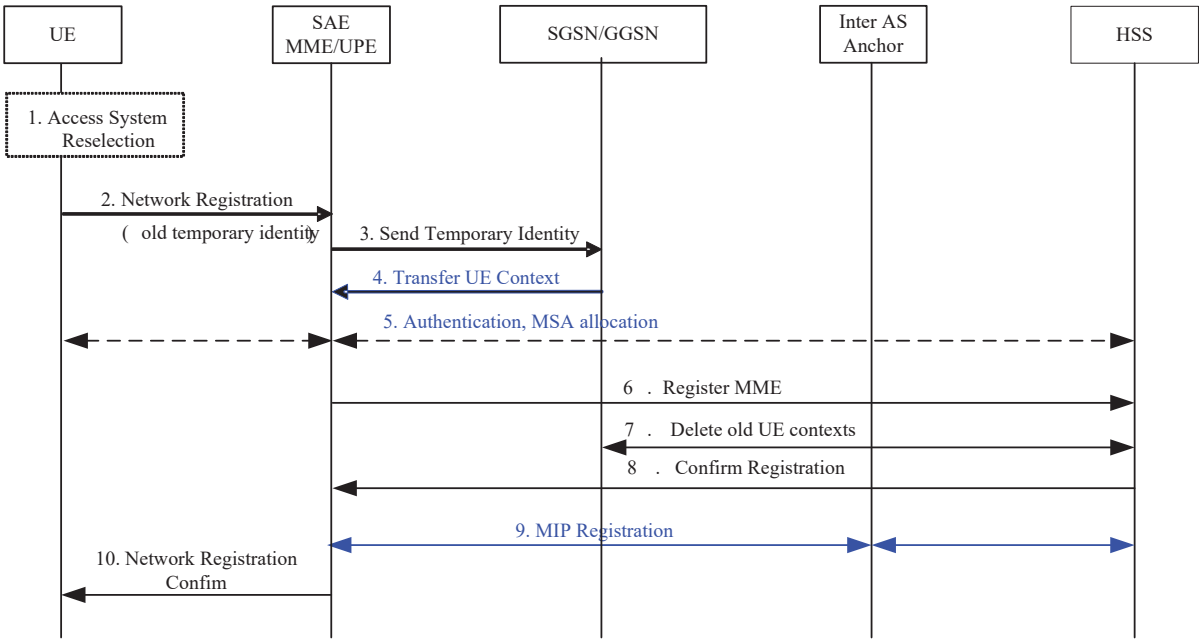

Figure 7.5-7: Information flow for change in idle state from 2G/3G to SAE/LTE

1) The UE in idle state re-selects a different 3GPP Access System.

2) The access System reselection triggers a network registration by UE with temporary identity and potentially its old tracking area or another parameter identifying the old MME/UPE to the new SAE MME.

3) The new SAE MME derives an address of the UE's 2G/3G MME/UPE from the parameters sent by the UE. The new SAE MME/UPE sends the UE parameters to the old MME/UPE.

4) The old MME/UPE sends a UE context to the new SAE MME. The UE context includes a permanent user identity and other information, e.g. security and IP bearer parameters. The UE context may also include MIP context, such as a HoA for the UE, UE-HA MSA.

5) If the new SAE MME/UPE couldn't get UE context from 2G/3G SGSN/GGSN, the new SAE MME/UPE authenticates UE. If the new SAE MME/UPE has no valid MSA between UE and IASA, HSS should send MSAs needed for mobile IP to SAE MME/UPE in this step.

6) The new MME/UPE registers itself as serving the UE in the HSS.

7) The UE contexts in the old MME/UPE (SGSN and GGSN) may be deleted by an explicit network request, or after a timer expires.

8) The HSS confirms the registration of the new MME/UPE.

Resmed Corp. - Ex. 1037
Page 34

9) If IASA has valid MSA between UE and IASA, mobile IP registration is done directly between new MME/UPE and IASA, without the involvement of HSS; If IASA has no valid MSA between UE and IASA, IASA may need to communicate with HSS for authentication and for retrieval of MSAs. The user plane between new MME/UPE and IASA is established during the mobile IP registration procedure.

10) The new MME/UPE confirms the UE's network registration.

7.5.2.2.2 Impact on the baseline CN Architecture

Some impacts introduced by a Mobile IP solution for mobility across 3GPP and non-3GPP systems. These are listed separately in this document.

7.5.2.2.3 Impact on the baseline RAN Architecture

The baseline RAN architecture may support the UE in idle state re-selection of the SAE/LTE 3GPP Access System.

7.5.2.2.4 Impact on terminals used in the existing architecture

The terminals used in the existing architecture may be impacted by the introduction of Mobile IP solution in 2G/3G system.

7.6 Key issue: Limiting signalling due to idle mode mobility between E-UTRA and UTRA/GSM

7.6.1 Requirement

Clause 5 of this TR contains the following requirement:

"The SAE/LTE system shall provide effective means to limit mobility related signalling during inter-RAT cell-reselection in LTE_IDLE state. For example, with similar performance to that of the "Selective RA Update procedure" defined in TS 23.060."

In this issue, the limiting signalling over the air interfaces is an important issue. The limiting signalling for updating the tracking area (routing area, in case of UTRA/2G) and signalling for paging must be considered together, since the two have a trade-off relationship.

7.6.2 Potential Solutions

The following solutions/concepts have been identified so far:

a) Separate Routeing Area/Do nothing

b) Common Routeing Area/Common SGSN

c) Common RNC

d) Equivalent Ras and SGSN proxy

e) UE remains camped on the last used RAT

f) Packet Data Bearer Proxy

g) Inter RAT Resource Allocation

h) User-IP layer interconnection

i) combined MME/SGSN

Other potential solutions might be identified in the future. Further information on the above solutions is included in Annex D "More detailed descriptions of potential solutions for limiting signalling due to idle mode mobility between E-UTRA and UTRA/GSM ".

Resmed Corp. - Ex. 1037
Page 35

7.6.3 Selected Solution(s)

As they are currently described, potential solutions a, b and e do not provide sufficient limitation of mobility related signalling during inter-RAT cell re-selection in idle state. Potential solutions a, b and e are hence ruled out.

Following TSG-RAN decisions on the nature of the LTE-RAN architecture, potential solution c is ruled out.

Owing to not considering the characteristic of UE's movement at the beginning and the push mode for context retrieval, potential solution d is ruled out.

Potential solution f is ruled out since MME should have interface with HSS.

Owing to the working assumption on UTRA-LTE handover, potential solution h is ruled out.

Potential solution i, "combined MME/SGSN" does not meet all operational requirements. However the adopted solution should not prevent the implementation of a combined MME/SGSN.

It is agreed that the selected solution should be developed using a standardised signalling interface between MME and SGSN. Potential solutions d, f and g all contain information that should be considered when developing one unified solution.

It is agreed that the selected solution should use potential mechanisms described in Annex D.4.4 or D.4.6 or D.4.7 for context retrieval. It is FFS which one of the mechanisms is selected.

It is agreed that UE registers to both the SAE network and the UMTS network separately. After that, whether the MME and the SGSN should be both registered to HSS is FFS. It is also agreed that the UE gets separate RAI and TAI for 2G/3G or LTE/SAE mobility management, allocated respectively by SGSN or MME/UPE.

7.7 Key Issue Intra LTE-Access-System Mobility in LTE_IDLE State

7.7.1 Description of Key Issue Intra LTE-Access-System Mobility in LTE_IDLE State

Intra LTE-Access-System Mobility functionality for Ues in LTE_IDLE State maintains the registration of a user/UE and keeps track of the location of the user/UE on Tracking Area base so that mobile originated and mobile terminated packet transfer may be initiated. Furthermore, Intra LTE-Access-System Mobility functionality for Ues in LTE_IDLE State updates within the network any user plane routing and any potential tunnelling information so that data path is established between intersystem mobility anchor and the UPE.

Intra LTE-Access-System Mobility functionality in LTE_IDLE State maintains subscriber identity confidentiality, i.e. temporary user identities are used where necessary.

In intra LTE-Access-System Mobility in LTE_IDLE State, UPE relocation is needed for certain scenarios.

In case of UPE relocation, it should be possible for IP applications to provide uninterrupted service to the end user. Depending on the scenario, this may require support for IP service continuity.

7.7.2 Solution for key issue Intra LTE-Access-System Mobility in Idle State

7.7.2.1 General

The SAE/LTE Access System has an MME (Mobility Management Entity, it is FFS whether it resides in RAN or CN). Furthermore, the SAE/LTE Access System has a UPE (User Plane Entity). The UE registers with the MME and the UPE.

The MME stores a UE context data like permanent and temporary user identities, mobility state, tracking area etc. The MME can store the UE context for long to allow for detach and reattach with temporary identity (user identity confidentiality). The SAE/LTE system consists of distributed MMEs utilising load sharing/redundancy mechanisms

Resmed Corp. - Ex. 1037
Page 36

(e.g. similar to Iu-flex) enabling mobility of the UE within a certain geographical area without changing the MME. The SAE/LTE system supports inter-MME mobility.

The UPE stores UE context data like parameters of the default IP connectivity service and keeps network internal routing information.

The SAE/LTE Access System combines network attach and establishment of default IP connectivity capabilities (always on), i.e. all parameters required for an IP connectivity service with default QoS are allocated for the UE already at attach. In idle state all data transfer resources between UE and network are released and only information for default IP connectivity is stored in the network.

NOTE 1: Issues w.r.t. IP address re-assignment for inter-MME/UPE mobility need to be clarified.

User identity confidentiality requires the UE to register with the network using a temporary identity. The temporary identity is resolved to a permanent identity by the old serving MME.

The routing between UPE and the user-plane anchor is updated, unless the two are co-located. It is the precondition for being able to page the UE when downlink data arrive. And, the home register (e.g. HSS) is updated with registration of the UE at another MME/UPE. These functions are shown in the figure 7.7-1.

NOTE 2: It is FFS whether inter MME mobility is done with a context transfer (relocation) or a re-attach based scheme.

NOTE 3: The location of the user plane anchor for intra LTE-Access-System mobility is FFS.

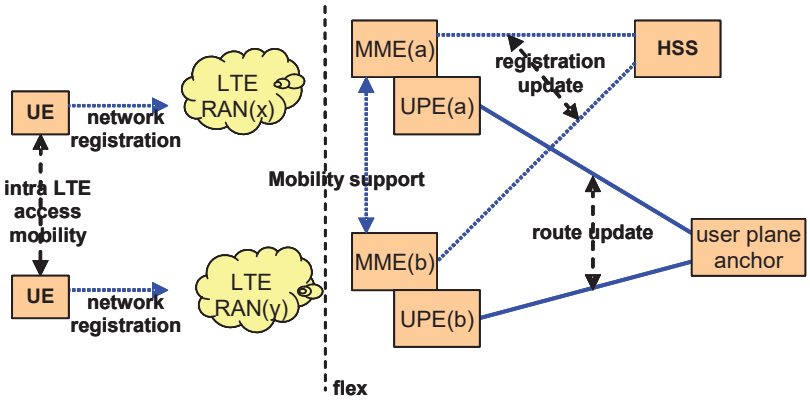

Figure 7.7-1: Intra LTE-Access-System mobility in LTE_IDLE

7.7.2.2 Mobility in LTE_IDLE State

The information flow below depicts the mobility in LTE_IDLE State with Tracking Area Registration (when under same MME).

Resmed Corp. - Ex. 1037
Page 37

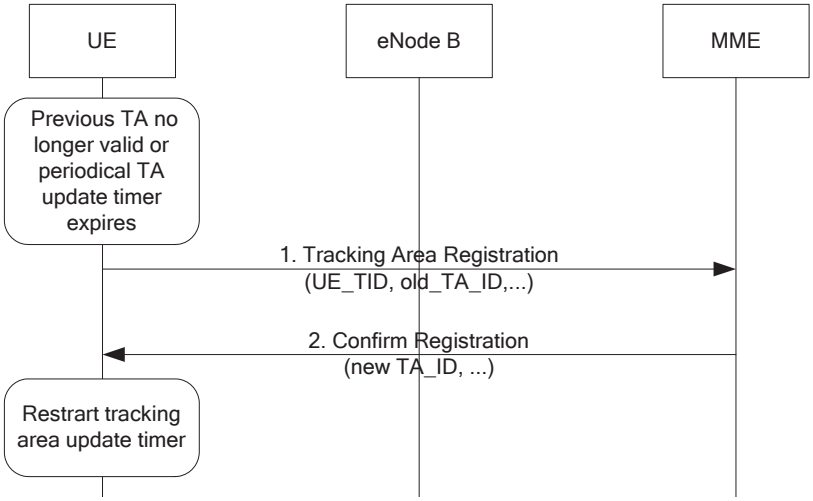

Figure 7.7-2: Area Registration

1) UE sends Tracking Area Registration when the previous Tracking Area is no longer valid or periodical Tracking Area Update timer has expired. The Tracking Area Registration message contains UE's old temporary identity, and old Tracking area Identity.

Editor's note: The exact list of information elements needed in this message is FFS.

2) MME responds with Confirm Registration. Confirm Registration contains new Tracking Area Identity, and may also contain a new temporary identity for UE.

7.7.2.3 Intra LTE-Access-System change in idle state with user context transfer

The information flow below depicts inter-MME/UPE mobility with context transfer between MME/UPE entities. MME and UPE entities on the old and the new side are shown together for simplicity reasons assuming a 1:1 relation between MME and UPE entities. This does not preclude a separation, which would however require the definition of an interface between both entities.

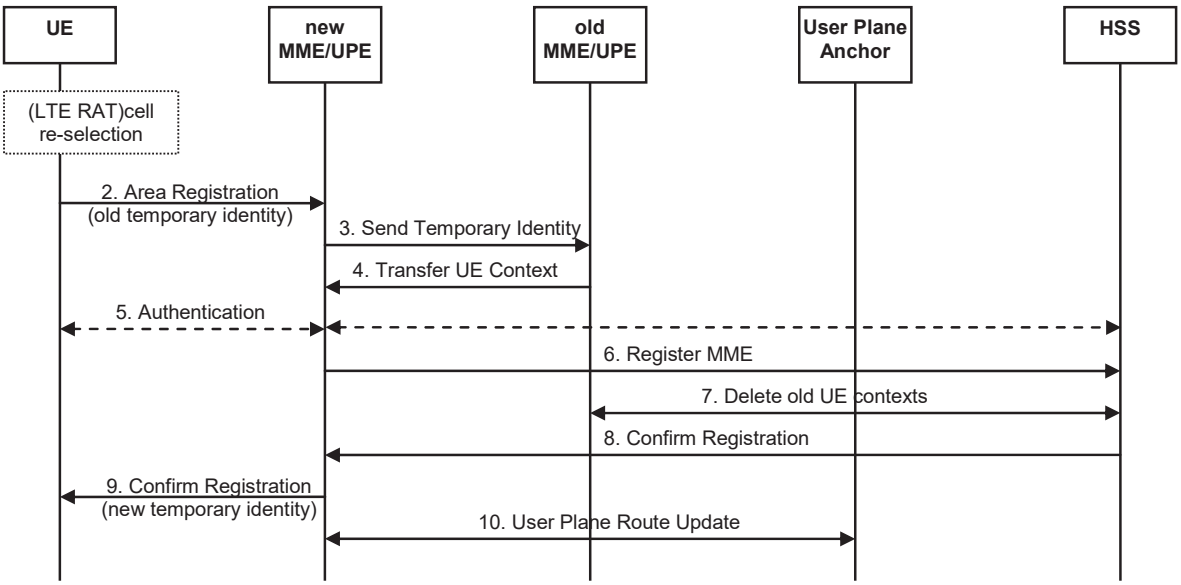

Figure 7.7-3: Information flow for Intra LTE-Access-System change in idle state with user context transfer

1) The UE in idle state re-selects an LTE cell.

Resmed Corp. - Ex. 1037
Page 38

2) The cell re-selection triggers an area registration if the UE crossed an Tracking Area boundary. The UE sends its temporary identity and its old tracking area identifying the old MME/UPE to the new MME/UPE.

3) The new MME/UPE derives an address of the UE's old MME/UPE from the parameters sent by the UE. The new MME/UPE sends the UE parameters to the old MME/UPE.

4) The old MME/UPE sends the UE context to the new MME/UPE. The UE context includes a permanent user identity and other information like security and IP connectivity parameters.

5) The UE may be authenticated in the new MME/UPE.

6) The new MME/UPE derives from the permanent user identity an HSS address and registers itself as the MME/UPE serving the user at the HSS.

7) The HSS deletes the UE context in the old MME/UPE.

8) The HSS confirms the registration of the new MME/UPE.

9) The new MME/UPE confirms the UE's network registration and allocates a new temporary identity to the UE.

10) The new MME/UPE updates the route from the user plane mobility anchor to itself. Mobile terminated packets arrive at the new MME/UPE.

7.7.2.4 Intra LTE-Access-System change in idle state with re-attach

A MME/UPE may trigger a change of MME/UPE while the UE is in LTE-IDLE state using the Network initiated Re-Attachment procedure described in clause 7.13.2.

While performing the Re-attachment procedure, the UE shall establish the same bearers as used before reattach and also enough information may be provided to the network to make sure the same Inter-AS Anchor could be selected as the one which was used before re-attach, if it is necessary for the service continuity.

7.7.3 Impact on the baseline CN Architecture

Editors Note: It is FFS whether there is any particular impact.

7.7.4 Impact on the baseline RAN Architecture

Editors Note: It is FFS whether there is any particular impact.

7.7.5 Impact on terminals used in the existing architecture

Editors Note: It is FFS whether there is any particular terminal impact.

7.7.6 Alternative solution

7.7.6.1 Solution for key issue Intra LTE-Access-System Mobility in Idle State

The SAE/LTE Access System has an MME (Mobility Management Entity, it is FFS whether it resides in RAN or CN). Furthermore, the SAE/LTE Access System has a UPE (User Plane Entity). The UE registers with the MME and the UPE.

The MME stores a UE context data like permanent and temporary user identities, mobility state, tracking area etc. The MME can store the UE context for long to allow for detach and reattach with temporary identity (user identity confidentiality). The SAE/LTE system consists of distributed MMEs utilising load sharing/redundancy mechanisms (e.g. similar to Iu-flex) enabling mobility of the UE within a certain geographical area without changing the MME. The SAE/LTE system supports inter-MME mobility.

The UPE stores UE context data like parameters of the default IP connectivity service and keeps network internal routing information.

Resmed Corp. - Ex. 1037
Page 39

The SAE/LTE Access System combines network attach and establishment of default IP connectivity capabilities (always on), i.e. all parameters required for an IP connectivity service with default QoS are allocated for the UE already at attach. In idle state all data transfer resources between UE and network are released and only information for default IP connectivity is stored in the network.

User identity confidentiality requires the UE to register with the network using a temporary identity. The temporary identity is resolved to a permanent identity by the old serving MME.

A MME/UPE is the first IP hop router for the UE.

At power on, the UE attaches to a MME/UPE and gets an IP address belonging to the subnet of the user plane anchor node. The user plane anchor node could be collocated with the serving MME/UPE. Otherwise, e.g, for location privacy reasons, the user plane anchor node could be located in the PLMN core.

In order to avoid frequent IP address re-assignments, the UE shall keep the same IP address as long as possible. An *edge domain* is defined as the area of a PLMN within which the UE can roam without any need to change the (local) IP address. An *edge domain* could possibly be as large as the whole PLMN.

As long as the UE changes IP subnet or MME/UPE within the same *edge domain*, the routing between UPE and the user-plane anchor is updated, unless the two are co-located. It is the precondition for being able to page the UE when downlink data arrive. And, the home register (e.g. HSS) is updated with registration of the UE at another MME/UPE. These functions are shown in the figure 7.7-4.

If UE moves to an MME/UPE belonging to a new *edge domain*, the UE gets a new (local) IP address.

In order to allow IP reachability for a UE moving between different *edge domains* (e.g. in case the PLMN evolved core is partitioned in more *edge domains, or in case of movements across different PLMNs*), the (local) IP address needs to be registered towards a fixed anchor (inter-domain mobility anchor). This anchor can be located in the home or in the visited network depending on IP bearer service requirements (i.e. whether the global IP address needs to be assigned by the visited or by the home network).

The role of the inter-domain function is shown in the figure 7.7-5.

NOTE: a home based inter-domain mobility anchor may be included in the data path in general for all roaming Ues that need to obtain an IP address belonging to the HPLMN.

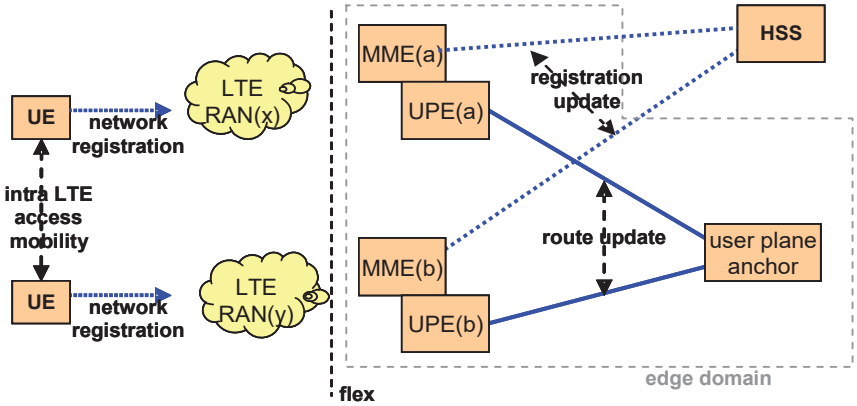

Figure 7.7-4: Intra LTE-Access-System mobility in LTE_IDLE (local mobility)

Resmed Corp. - Ex. 1037
Page 40

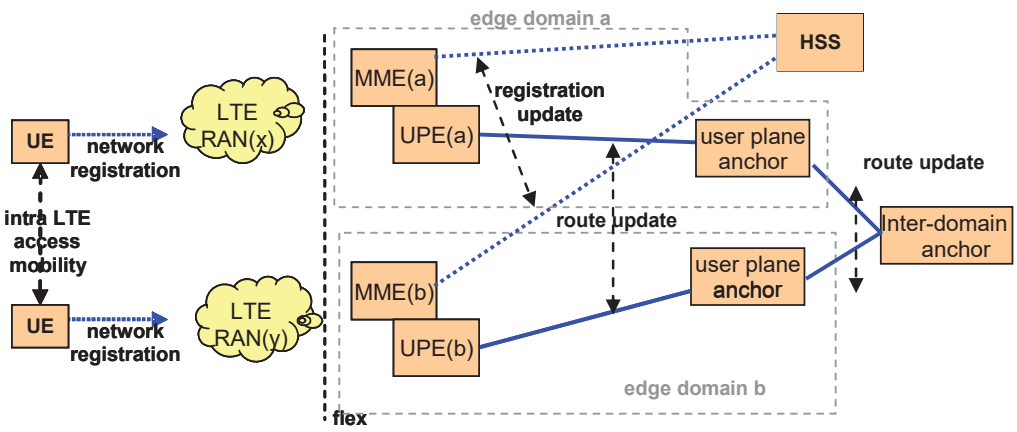

Figure 7.7-5: Intra LTE-Access-System mobility in LTE_IDLE (global mobility)

7.8 Key Issue: Inter access system handover

7.8.1 Principles and terminologies

There are two different cases for inter access system handover in SAE.

- Handover between 3GPP access systems: Handover between UTRAN/GERAN and the SAE/LTE 3GPP Access System.
- Handover between 3GPP and non 3GPP access systems: Handover between UTRAN/GERAN/SAE/LTE 3GPP Access System and non 3GPP radio technology including WLAN 3GPP IP access.

NOTE 1: It is FFS whether the same mechanism can be applied to both cases or not.

NOTE 2: Solutions for mobility between access systems supporting different IP versions should be studied as part of this key issue.

NOTE 3: The arguments and conclusions on mobility between access systems supporting different IP versions presented under this key issue may be considered in the context of other mobility related key issues.

7.8.2 Inter access system handover between 3GPP access systems (UTRAN/Evolved HSPA/GERAN and SAE/LTE 3GPP access system)

7.8.2.1 Description

Handover between 3GPP access systems maintains the UE's established IP packet bearer service(s) during mobility between 2G/3G access and SAE/LTE 3GPP access system.

For mobility between 3GPP accesses (UTRAN/Evolved HSPA/GERAN and SAE/LTE), the mobility and anchoring is performed below the User IP layer or in another term, below UMTS Gi level. This implies the usage of a common 2G/3G/LTE mobility anchor and mechanisms that control and perform mobility between the user plane tunnels (Gn-UP) of existing 2G/3G accesses (GERAN and UTRAN) and the user plane tunnels of the Evolved Packet Core.

In addition, it is clarified that S3 is GTP based.

Editor's note:
-The working assumption above does not imply any protocol/solution on S1 and S5 reference points (see clause 4.2).
-The working assumption above does not imply any grouping of functions on other Key Issues.

Resmed Corp. - Ex. 1037
Page 41

It should be noted that this clause does not attempt to draw conclusions to the investigation of supporting different anchoring mechanisms and mobility protocols between 3GPP and non-3GPP accesses.

7.8.2.2 Alternative solution A

7.8.2.2.1 Description

This alternative solution assumes a grouping of functions as shown in the figure below, i.e. the functions are grouped:

- MME and UPE are combined into one functional entity, and
- Inter AS anchor is one functional entity.

The description is also applicable to a functional grouping that combines SAE MME, SAE UPE and Inter AS Anchor into one functional entity.

The SAE/LTE 3GPP Access System has an SAE MME (FFS whether in RAN or CN). The corresponding 2G/3G MME is the SGSN. Furthermore, the SAE/LTE 3GPP access system has an SAE UPE. The corresponding 2G/3G UPE is the SGSN.

The decision for initiating a handover is made by radio system entities of the source 3GPP access system.

Handover between 3GPP access systems is performed as a backward handover, i.e. the radio resources are prepared in the target 3GPP access system before the UE is commanded by the source 3GPP access system to change to the target 3GPP access system.

The handover preparation is carried out over the reference point S3.

This reference point is also used to forward user data during handover to avoid data loss due to handover.

During the handover phase or after the handover phase the user plane routing and any potential tunnelling between serving 3GPP access system and inter system mobility anchor is updated to the target 3GPP access system. The UE registers with the target 3GPP MME and the target 3GPP MME registers with the HSS.

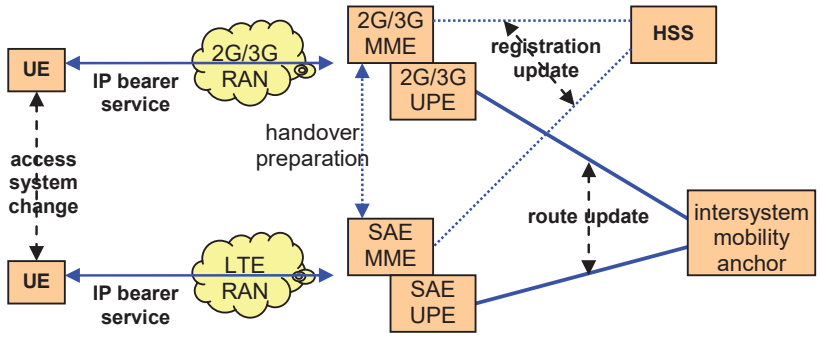

Figure 7.8-1: Handover between 3GPP access systems for alternative solution A

In the information flow below SAE MME and SAE UPE are shown together for simplicity reasons. This does not preclude a separation for SAE/LTE. The separation into two entities requires an interface between both for example for paging, then registration between each other and doubles context transfer.

Resmed Corp. - Ex. 1037
Page 42

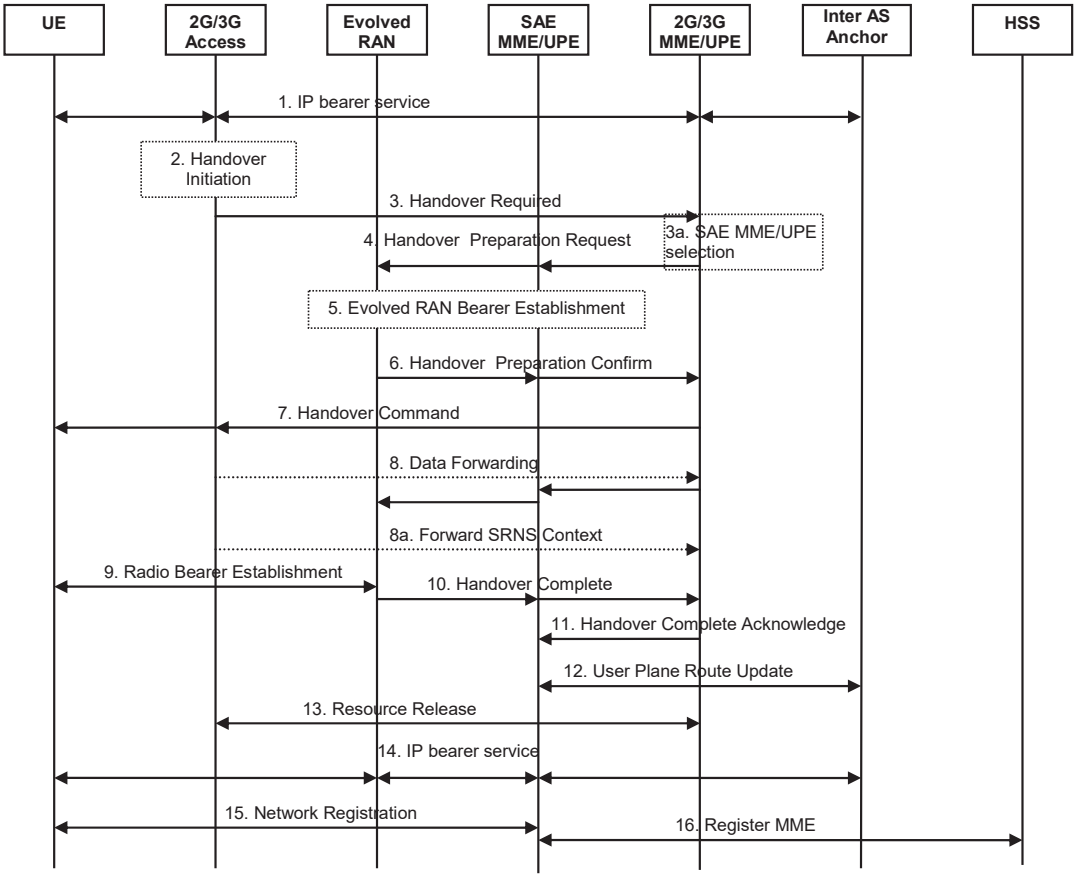

Figure 7.8-2: Information flow for handover from 2G/3G to SAE/LTE

1) The IP bearer service is established between UE and Inter AS Anchor via 2G/3G access system and 2G/3G MME/UPE

2) The serving 2G/3G access system decides to initiate a handover to Evolved RAN.

3) The serving 2G/3G access system indicates Handover Required and the handover target to its 2G/3G MME/UPE.

3a) The 2G/3G MME/UPE selects a SAE MME/UPE serving the Evolved RAN nodes the UE is going to use

4) The 2G/3G MME/UPE sends a Handover Preparation Request to the target Evolved RAN via the selected SAE MME/UPE.

5) The target Evolved RAN establishes bearer resources, including radio resources, for the UE.

6) The Evolved RAN confirms the Handover Preparation to the 2G/3G MME/UPE via the selected SAE MME/UPE.

7) The 2G/3G MME/UPE commands the UE to change to the target Evolved RAN.

8) In case the source access system is 3G the 3G access system (RNC) may start to forward data to its 3G MME/UPE. The 2G/3G MME/UPE forwards data to the Evolved RAN via the SAE MME/UPE. Depending on the required QoS the 3G access system (RNC) sends duplicates of the forwarded data also via 3G radio to minimise data loss.

8a) In case the source access system is 3G the 3G access system (RNC) sends a Forward SRNS Context message to its 3G MME/UPE. It contains information for data transfer continuation by a new RNC for lossless relocation.

Resmed Corp. - Ex. 1037
Page 43

The usage of this information and mechanisms for inter 3GPP handover is FFS as it implies a stop of the data transfer at source side, which is needed for a stable data transfer state.

9) The Radio Bearer is established between UE and target Evolved RAN.

10) The Evolved RAN informs the 2G/3G MME/UPE about handover completion.

11) The 2G/3G MME/UPE acknowledges the handover completion towards the SAE MME/UPE.

12) The SAE MME/UPE updates the route from the Inter AS Anchor to itself. Mobile terminated packets arrive at the new MME/UPE.

13) The resource in the source system is released.

14) The IP bearer service is established between UE and Inter AS Anchor via Evolved RAN and SAE MME/UPE.

15) The UE may need to perform a registration with the new serving SAE MME/UPE. This triggers the SAE MME to register with the HSS.

For handover from SAE/LTE to 2G/3G the same information flow is applicable with a changed order of MME/UPE and RAN/access system entities. For this handover the Evolved NodeB or the SAE MME/UPE may need to duplicate and forward data as the Evolved RAN has no user plane entity comparable to the RNC. It is FFS whether and which entity performs duplication in this case.

7.8.2.2.2 Impact on the baseline CN Architecture

The baseline CN architecture needs to be able to address SAE MME/UPEs and to perform handover procedures with SAE MME/UPEs. In case Gn procedures and RNC IDs are used to address the Evolved RAN the 3G MME/UPE (SGSN) is not impacted.

Access restrictions, i.e. user specific restrictions for handover to Evolved RAN, may need an update for the SGSN to know the relevant coding of such restrictions.

7.8.2.2.3 Impact on the baseline RAN Architecture

The baseline RAN architecture handles UE measurements from Evolved RAN and addresses Evolved RAN handover targets.

7.8.2.2.4 Impact on terminals used in the existing architecture

Editors Note: It is FFS whether there is any particular terminal impact.

7.8.2.3 Alternative solution B

7.8.2.3.1 Description

The SAE UPE contains the mobility anchor function for inter-3GPP access systems to handle mobility between 2G/3G and SAE. The location of the mobility anchor function for 3GPP to non-3GPP access system does not impact this solution, since this solution is for mobility between 3GPP access systems

Resmed Corp. - Ex. 1037
Page 44

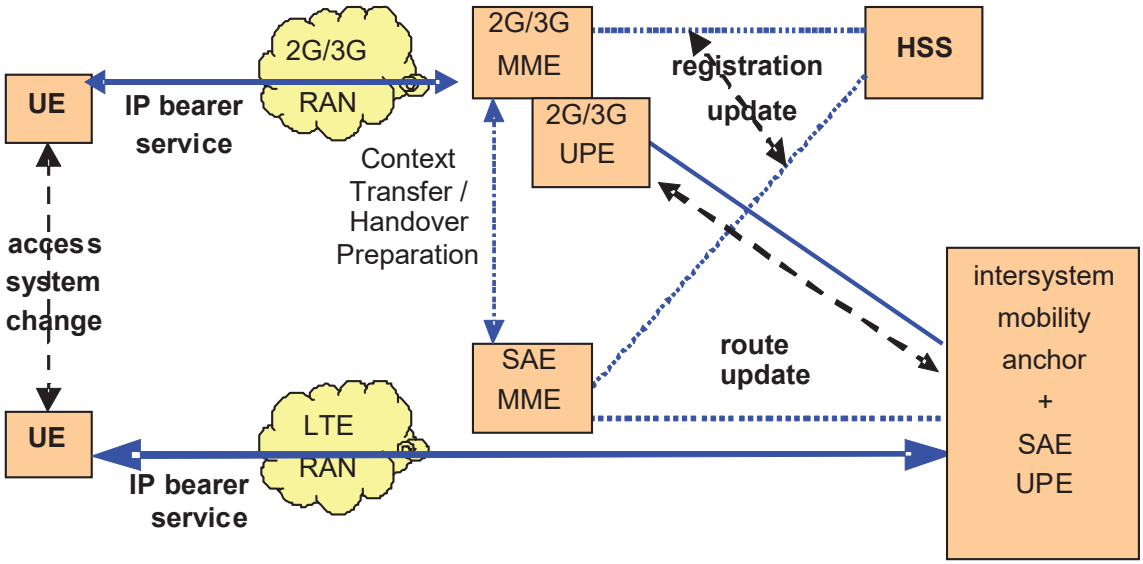

Figure 7.8-3: 3GPP Inter Access System Change between LTE RAN and pre-SAE/LTE 2G/3G RAN for Alternative B

Handover between 3G systems is performed as a backward handover i.e. the radio resources are prepared in the target 3GPP access system before the UE is ordered by the source 3GPP access system to change to the target 3GPP access system.

For the case of a 2G to LTE system mobility when the 2G system has no support for PS Handover, the UE will first perform cell re-selection before initiating a Tracking Update Procedure. This results in a "forward handover" instead of the "backward handover" and is identical to inter-RAT Mobility in IDLE mode.

The decision for initiating a handover is made by radio system entities of the source 3GPP access system.

During the handover phase the user plane is established between the LTE Access and the SAE UPE.

The SAE MME may be collocated with the SAE UPE or with the 2G/3G MME/UPE (SGSN) in order to simplify the number of interfaces and signalling transactions.

Resmed Corp. - Ex. 1037
Page 45

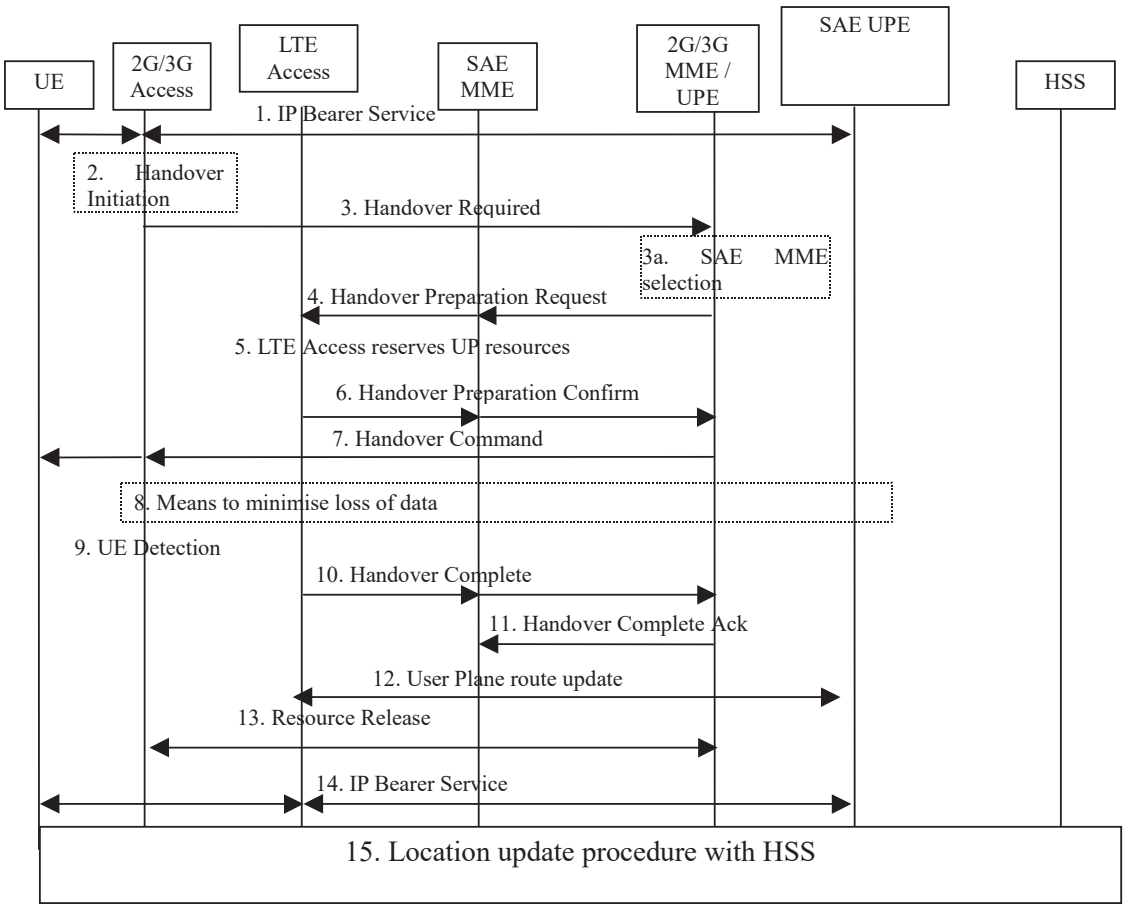

Figure 7.8-4: Backward Handover from 2G/3G to SAE/LTE

1) The IP bearer service is established between the UE and the SAE UPE via 2G/3G access system and 2G/3G MME/UPE (SGSN)

2) The pre-SAE/LTE 2G/3G Access decides to initiates a handover to LTE Access

3) The pre-SAE/LTE 2G/3G Access sends a Handover Required with the pre-SAE/LTE 2G/3G MME.

3a) The 2G/3G MME/UPE selects a SAE MME serving the Evolved RAN nodes the UE is going to use

4) The 2G/3G MME derives an address of the target SAE MME and sends a Handover Preparation Request, including the UE context information. The SAE MME creates a UE context and sends a Handover Preparation Request (PDP Session) to the LTE Access.

5) The LTE Access sets up user plane contexts for the SAE UE

6) The LTE Access sends a Handover Preparation Confirm to the SAE MME. The SAE MME sends a Handover Preparation Confirm to the 2G/3G MME.

7) The 2G/3G MME sends a Handover Command to the UE via the 2G/3G Access.

8) Data loss may be minimised, e.g by bi-casting or data forwarding. Further details on the data forwarding path are FFS as they depend on the location of header compression and ciphering.

9) The UE is detected at the LTE Access.

Resmed Corp. - Ex. 1037
Page 46

10) LTE Access sends a Handover Complete to the SAE MME. The SAE MME initiates the Handover Complete Procedure with the 2G/3G MME.

11) The 2G/3G MME acknowledges the handover completion towards the SAE MME.

12) The SAE UPE switches the user plane towards the new LTE Access. The SAE UPE will now forward all downlink packets to the LTE Access.

13) The resource in the source system is released.

14) The IP Bearer service is now established between the UE and the SAE UPE via LTE Access and SAE UPE.

15) The UE updates its location using a Tracking Area Update Procedure with the SAE MME. The SAE MME will initiate the Register MME procedure with the HSS.

7.8.2.3.2 Impact on the baseline CN Architecture

The baseline CN architecture needs to be able to address SAE MME/UPEs and to perform handover procedures with 2G/3G MME/UPEs. In case Gn procedures and RNC IDs are used to address the Evolved RAN the 2G/3G MME/UPE (SGSN) is not impacted. In case of Gn procedures, the user plane between 2G/3G UPE and SAE UPE and the signalling plane between 2G/3G MME and SAE MME can be accomplished based on GTP-U and GTP-C protocols respectively with enhancements.

Access restrictions, i.e. user specific restrictions for handover to Evolved RAN, may need an update for the SGSN to know the relevant coding of such restrictions.

7.8.2.3.3 Impact on the baseline RAN Architecture

The baseline RAN architecture handles UE measurements from Evolved RAN and addresses Evolved RAN handover targets.

7.8.2.3.4 Impact on terminals used in the existing architecture

Editors Note: It is FFS whether there is any particular terminal impact.

7.8.2.4 Alternative solution C

7.8.2.4.1 Description

This solution is similar to Alternative solution A, but positions the solution for inter-access system handover between 3GPP access systems at user-IP layer, rather than below (i.e. tunnel switching below the user-IP layer). That is, the same basic solution for mobility across 3GPP and non-3GPP access systems applies, with the addition of handover enhancements as described below. These enhancements are meant to reduce the handover interruption times across UTRAN/GERAN and SAE/LTE 3GPP access systems.

Similar to solution alternative A, the decision for initiating a handover is made by radio system entities of the source 3GPP access system.

Also, the handover between 3GPP access systems is performed as a backward handover, i.e. the radio resources are prepared in the target 3GPP access system before the UE is commanded by the source 3GPP access system to change to the target 3GPP access system.

The handover preparation is carried out over a reference point between target and source 3GPP access system, i.e. between 2G/3G and SAE/LTE 3GPP access systems

It is FFS whether this reference point is also used to forward user data during handover or whether other mechanisms are used to avoid data loss due to handover, e.g. bi-casting by the intersystem mobility anchor.

Resmed Corp. - Ex. 1037
Page 47

During the handover phase or after the handover phase the user plane routing and any potential tunnelling between serving 3GPP access system and inter system mobility anchor is updated to the target 3GPP access system. The UE registers with the target 3GPP access system and the target 3GPP access system (MME) registers with the HSS.

The message sequence chart in Figure 7.8-5 illustrates the high level procedures for this solution alternative. In the information flows below, MME and UPE are shown together for simplicity reasons. This does not preclude a separation.

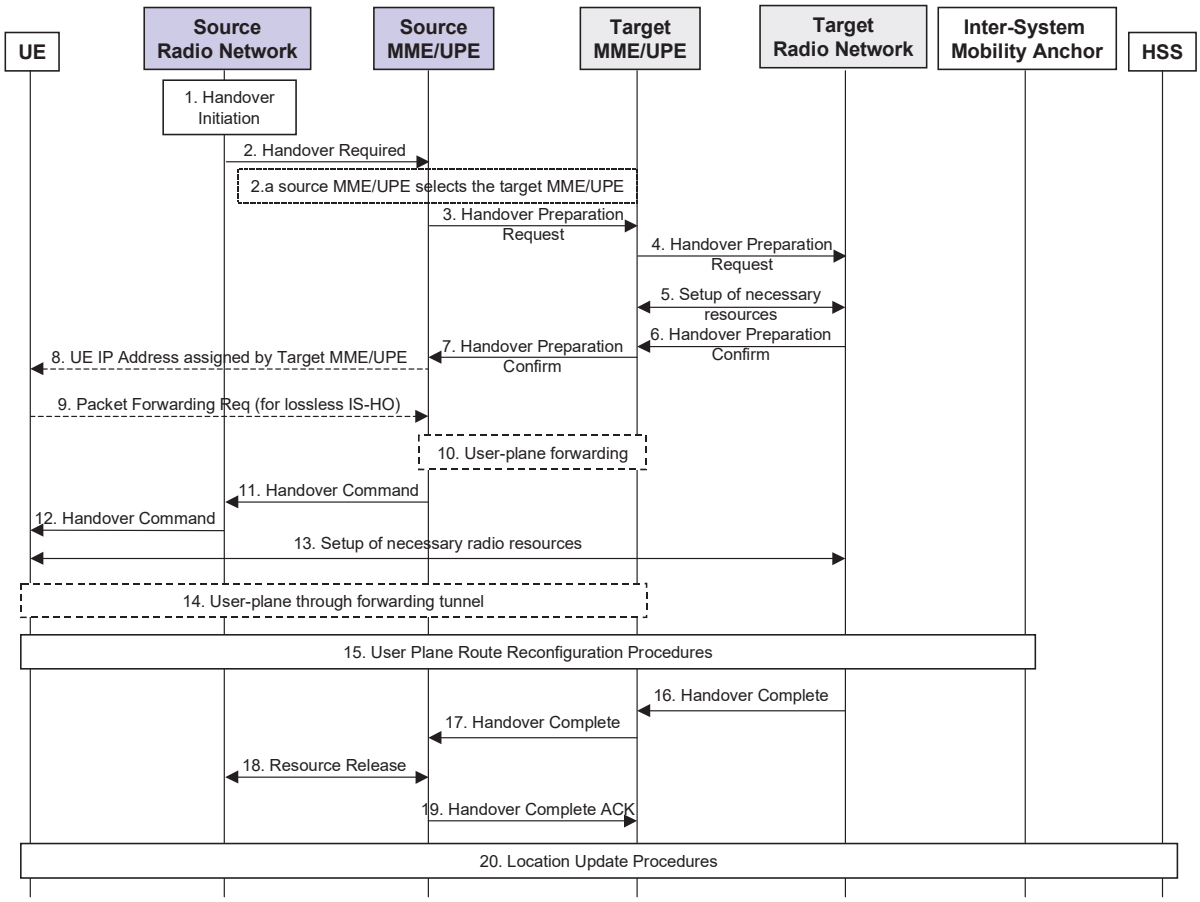

Figure 7.8-5: High level procedures for inter-access system handover between UTRAN/GERAN and SAE/LTE access systems when the inter-system mobility anchor is not a GTP tunnelling endpoint

Steps 1–8 correspond to the handover preparation phase, similar to that carried out for 2G/3G PS ISHO enhancements defined in TS 43.129 [7]. If the direction of the handover is towards 2G/3G, step 3 also triggers GTP tunnel setup. "Create PDP Context" messages are used for this purpose. Given that the UE IP address needs to be updated during the inter-system handover procedure, the UE IP address assigned by the target MME/UPE can be passed to the UE in step 8. This measure allows faster inter-system transitions.

Step 9 can be used to set up temporary IP forwarding tunnel(s) between source UPE and target UPE. This allows faster inter-system transitions and avoids packet loss.

Step 11 indicates the completion of the handover preparation phase. The source radio network can subsequently send a Handover Command.

After the UE sets up the necessary radio resources with the target radio network in step 13, the UE can start sending and receiving IP packets through the forwarding tunnel set up in step 10. If step 9 has not been carried out, then the UE needs to wait till the procedures in step 15 are completed before sending and receiving IP packets.

Once the user plane route reconfiguration is completed in step 15, the UE can send and receive IP packets directly through the target system. The forwarding tunnel that may have been set up in step 10 is no longer used and can be thorn down at this stage, either through soft state timeout, or through other explicit signalling (FFS).

Resmed Corp. - Ex. 1037
Page 48

Steps 16-20 are maintenance procedures (i.e. release any resources in the source system and location update). If the source access system is 2G/3G, this phase also includes tear-down of the GTP tunnel(s) between GGSN and source SGSN. "Delete PDP Context" messages are used for this purpose.

The procedures in Figure 7.8-5 can be based on a combination of procedures already defined in 3GPP and IETF. More specifically:

Steps 8-10 and 14 can be based on procedures defined in RFC 4068 [8] (for Ipv6) and draft-ietf-mip4-fmipv4 [9] (for Ipv4).

Step 15 can be based on RFC 3344 [10] (for Ipv4) and RFC 3775 [11] (for Ipv6).

The rest of the steps are similar to the procedures used in TS 43.129 [7].

Figure 7.8-6 shows an example of the mapping of Mobile IP functions and signalling flows in more detail, when Mobile Ipv4 is operated in FA-located care-of address mode. It is FFS whether co-located care-of address with IP header compression would be a more feasible solution compared to FA-located care-of address mode. A sequence chart for Mobile Ipv6 would look similar, but in step 15 signalling would be directly between UE and HA, and there are no FA functions in MME/UPE.

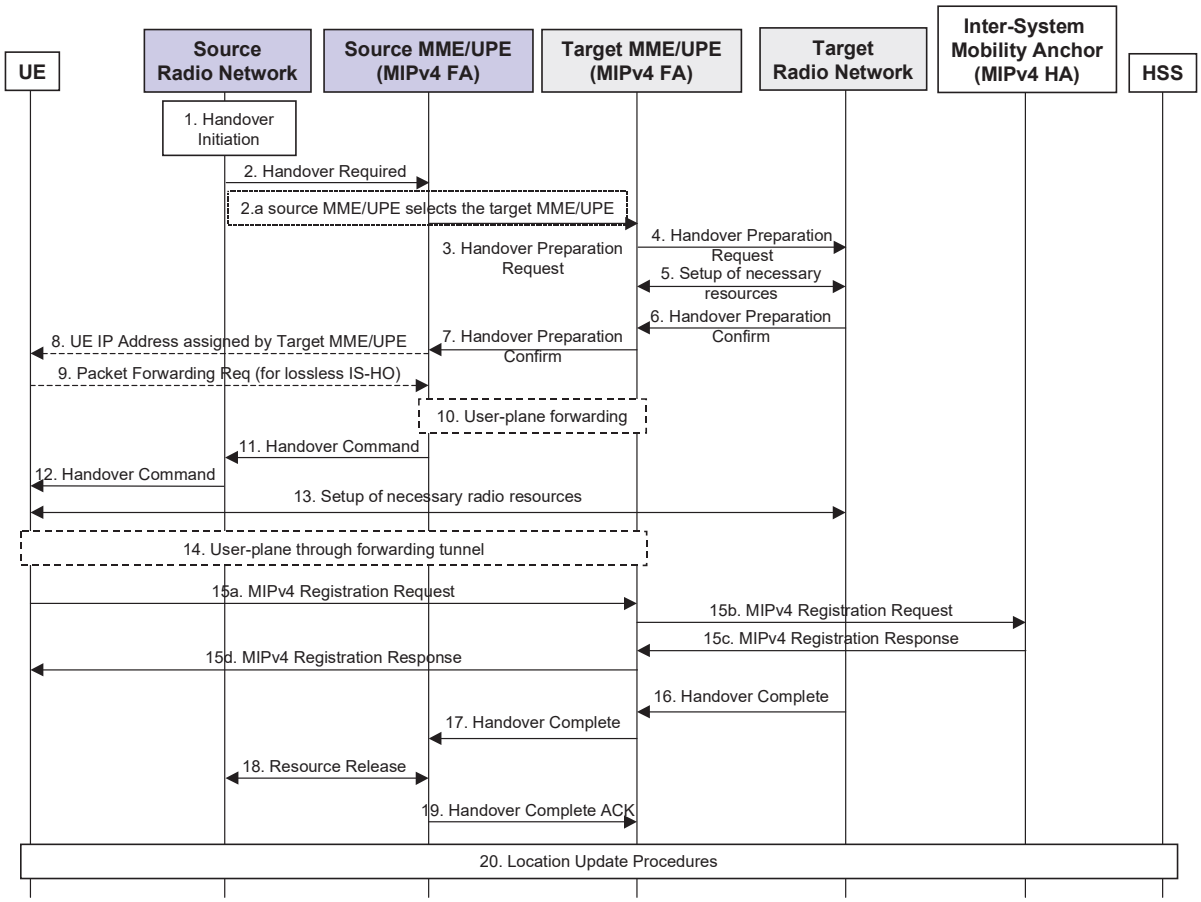

Figure 7.8-6: Example procedures with Mobile IP in FA-located care-of address mode

7.8.2.4.2 Impact on baseline CN Architecture

The impacts on the baseline CN architecture are as follows:

- same impacts introduced by a Mobile IP solution for mobility across 3GPP and non-3GPP systems. These are listed separately in this document.

Resmed Corp. - Ex. 1037
Page 49

- if packet loss mitigation is handled through packet forwarding, then the introduction of a layer-3 forwarding interface between GGSN and the SAE MME/UPE is required. Other packet loss mitigation schemes may not require this interface.
- SGSN must be ready to create or delete PDP contexts during the relocation procedure when UE is moving across UTRAN/GERAN and LTE/SAE Access systems.
- For mobility from UTRAN/GERAN towards SAE/LTE, steps 8 and 9 in Figure 7.8-5 and 7.8.6 need to be supported between UE and GGSN.

7.8.2.4.3 Impact on baseline RAN Architecture

The baseline RAN architecture handles UE measurements from LTE access system and addresses LTE access system handover targets.

7.8.2.4.4 Impact on terminals used in the existing architecture

The terminal needs to support Mobile IP protocol. And it is FFS whether the terminal should support both MIPv4 and MIPv6.

7.8.2.5 Alternative solution D

7.8.2.5.1 Description

This solution is based on Alternative solution C. the main different point should be highlighted here are:

- the UE won't need to support Mobile IP by using Proxy Mobile IP solution (e.g. draft-sgundave-mip6-proxymip6-00 [17]);
- the radio resource can be saved, because of hiding of the MIP signalling over radio interface.

The following figure describes this alternative solution. The source MME/UPE and target MME/UPE are 2G/3G MME/UPE and SAE MME/UPE respectively, or vice versa.

NOTE: The Proxy based Mobile IP mechanism is a kind of network layer mobility management mechanism. The detail of this Proxy based mechanism is FFS,

Resmed Corp. - Ex. 1037
Page 50

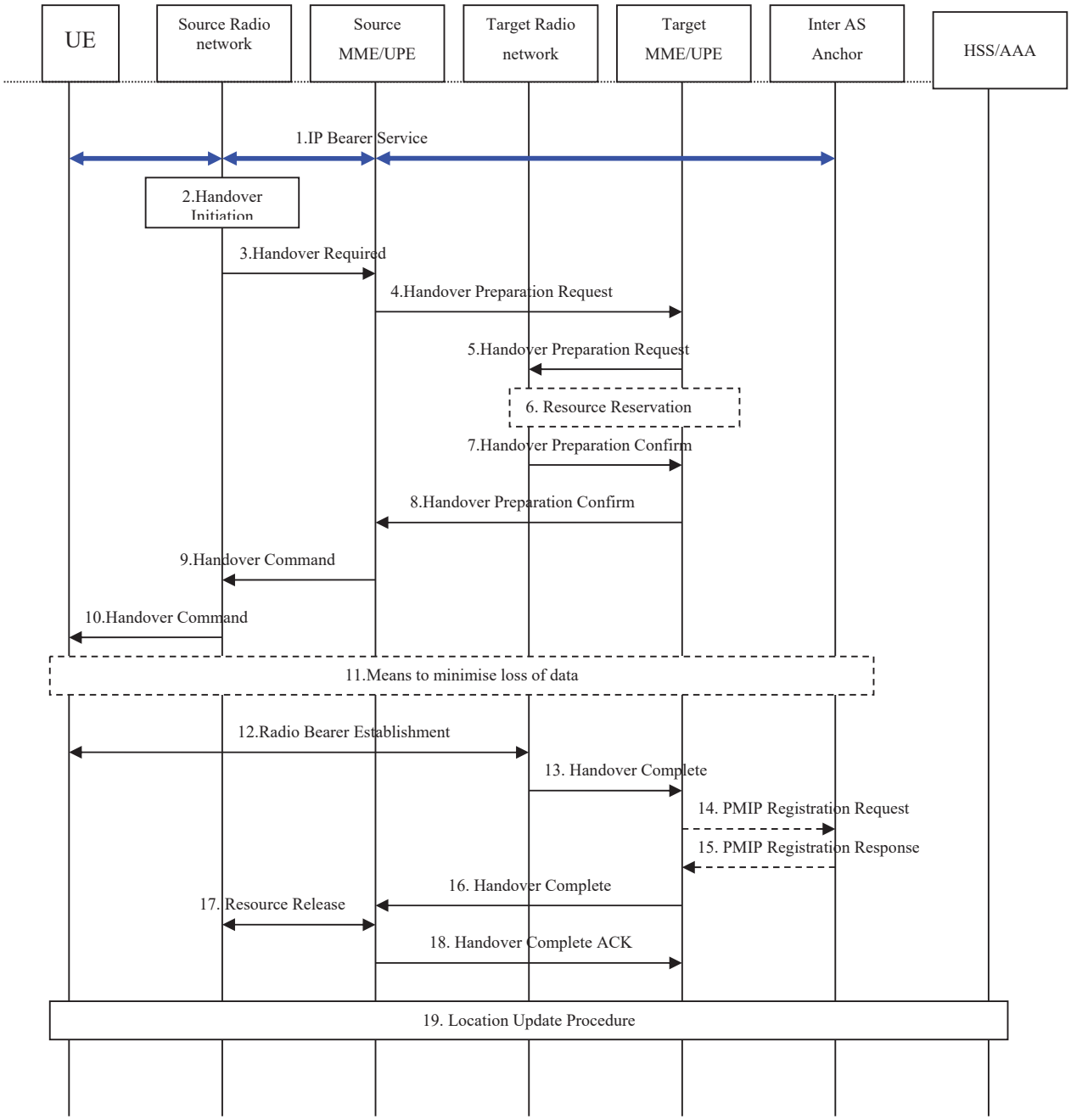

Figure 7.8-7: Inter MME/UPE Handover Message Flow

1. The IP bearer service is established between the UE and the inter AS Anchor via the source radio network and the source MME/UPE.

2. The source radio network decides to initiate a handover to the target radio network.

3. The source radio network indicates the handover request and handover target to its source MME/UPE.

4. The source MME/UPE sends a Handover Preparation Request to the target MME/UPE, including the necessary UE MM context (such as UE IP address, UE ID, and security parameters, etc).

5. The target MME/UPE forwards the Handover Preparation Request to the target radio network.

6. The target radio network sets up the user plane to the target MME/UPE for the UE. The detail process is FFS.

Resmed Corp. - Ex. 1037
Page 51

7. The target radio network confirms the Handover Preparation to the target MME/UPE.
8. Upon receiver the PMIP registration response, the target MME/UPE will confirm the handover preparation with the source MME/UPE.
9. The source MME/UPE sends the Handover Command to the source radio network. And the new Care-of Address will be passed to the source radio network.
10. The source radio network forwards the Handover Command message to the UE to indicate it to switch to the target radio network.
11. Data loss may be minimised, e.g. by bi-casting or data forwarding. If the bi-casting mechanism is assumed, the procedure of updating routing information (e.g. the procedure is similar to step 14 and step 15 as below) would be performed between step 7 and step 8.
12. The Radio Bearer is established between the UE and the target radio network. After that, the UE will receive the packets via the target radio network.
13. The target radio network informs the target MME/UPE about the handover completion.
14. The target MME/UPE sends the Mobile IP Registration Request Message to the Inter AS Anchor instead of the UE, which is called Proxy MIP Registration Request. The Care-of Address in the message can be the IP address of the target MME/UPE or the one which the target MME/UPE gets via a DHCP server.
15. The Inter AS Anchor adds a new binding item for the UE and then sends back the Registration Response Message to the target MME/UPE to confirm the registration.
16. The target MME/UPE forwards the Handover Completion to the source MME/UPE.
17. The user plane between the source MME/UPE and the source radio network will be released.
18. The source MME/UPE acknowledges the handover completion to the target MME/UPE.
19. Location update procedure will be done between the new MME/UPE and the HSS.

7.8.2.5.2 Impact on baseline CN Architecture

The impacts on the baseline CN architecture are the same as the alternative solution C. The additional impact is 2G/3G MME/UPE and SAE MME/UPE should support the Proxy Mobile IP solution.

7.8.2.5.3 Impact on baseline RAN Architecture

The baseline RAN architecture handles UE measurements from LTE access system and addresses LTE access system handover targets.

7.8.2.5.4 Impact on terminals used in the existing architecture

No impact is seen at this moment.

7.8.2.6 Comparison of Handover Flows

Editor's note: Following discussion at the SA 2 ad hoc on SAE in Paris, April 2006, this comparison has been deleted.

Resmed Corp. - Ex. 1037
Page 52

7.8.3 Inter access system handover between 3GPP and non 3GPP access systems

7.8.3.1 Description of key issue – Inter access system handover between 3GPP and non-3GPP access systems

The common denominator between 3GPP and non-3GPP access systems is that connectivity to packet services is delivered through the IP layer.

In this key issue, the term global mobility protocol is used to describe a mobility protocol that handovers between 3GPP and non-3GPP access systems, and the term global mobility is used to describe mobility where the mobility anchor point for handovers between 3GPP and non-3GPP access systems are involved. The term local mobility protocol is used to describe a protocol that manages handovers within a non-3GPP access system. The local mobility protocol could be Proxy MIP [17] or the mobility protocol specified within the IETF NETwork based Localized Mobility Management (NETLMM) WG.

The solution presented in this clause is based on the use of Mobile IP (MIP) as a global mobility protocol providing host-based IP mobility, which is in required whenever network-based mobility support is not provided. Depending on operator requirements and/or deployment scenarios, network-based mobility protocols could be used as local or global mobility protocols in combination with MIP, as described in clause 7.8.3.3.

7.8.3.2 Solution of key issue – Inter access system handover between 3GPP and non-3GPP access systems

7.8.3.2.1 Relationship with SAE architecture

Editor's note: This clause identifies the dependencies of this key issue with the SAE architecture, and will be revised when the functional grouping in the Evolved Packet Core is agreed.

The following illustrates the handovers that are within the scope of this key issue, and the related parts in the SAE architecture. Mobility anchor points in the Evolved Packet Core include the following functions:

- LTE anchor (corresponding to the anchor for LTE): The anchor point for intra-LTE mobility. This mobility mechanism is addressed separately (mainly in the RAN WGs).

- 3GPP anchor (corresponding to GGSN in pre-SAE/LTE GPRS): The anchor point for handovers between 3GPP access systems. This mobility mechanism is addressed in a separate key issue.

- SAE Anchor (corresponding to HA in the case of MIP): Represents functions grouped around the anchor point for handovers between 3GPP and non-3GPP access systems for the mobility protocols and mechanisms described in this key issue. This anchor allocates IP address(es) for the UE as required by the used mobility protocol (FFS).

The integration of the anchor points with each other and with other evolved packet core functions is FFS and is handled in other key issues (clause 7.11, Functions in the evolved packet core, and clauses 4.2 and 4.3, Architecture for the evolved system – non-roaming and roaming cases). Thus, the final solution needs to be aligned with the above key issues.

Non-3GPP inter access system mobility requires consideration of policy and charging control from the home operator, as the controlled service may cross operator as well as access system boundaries. Supporting such functions using a similar mechanism for different access types is described in a separate key issue (clause 7.1, Policy control and Charging).

Resmed Corp. - Ex. 1037
Page 53

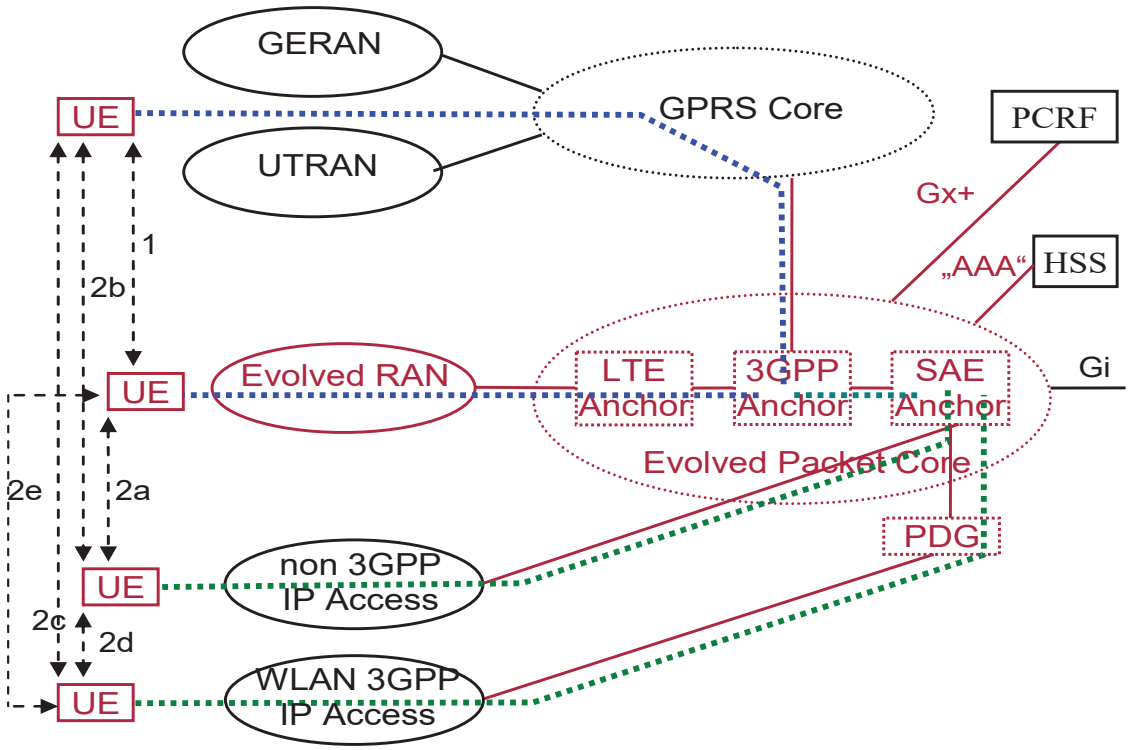

1. 3GPP handover. Mobility mechanism defined in different key issue.
2ab/c/d/e. Multi-access handover. Mobility using an IP layer mechanism
Note1: Grouping of the anchor functions into logical entities UPE and IASA is FFS
Note2: It is FFS whether the links between anchor functions imply reference points or not
Note3: The non 3GPP IP Access may contain local mobility anchor function
Note4: The relationship between PDG and the Evolved Packet Core is FFS
Note5: It is FFS how the architecture is aligned with the roaming case
Note6: The colors used in the figure do not imply any particular mobility protocol(s)

Figure 7.8-8. 3GPP and multi-access handover anchor functions.

Figure 7.8-8 shows the 3GPP and inter-access system handovers anchored in the 3GPP anchor function and SAE Anchor, respectively.

The introduced overhead (signaling and user plane transport overhead) and performance penalties (delays etc., as compared to when the mobility solution is not activated) should be minimized, especially for 3GPP accesses. By providing a certain level of interaction between the SAE Anchor and the 3GPP Anchor within the Evolved Packet Core, the Mobile IP based mobility signaling and tunneling only needs to be active when the terminal is using a non-3GPP access technology. This interaction can be achieved by integrating the 3GPP anchor function and SAE Anchor into a single entity, or with some other coordination between the 3GPP anchor and the SAE Anchor, so that the UE is at home (in MIP terminology) while moving within 3GPP accesses.

Without any of these interactions, Mobile IP signaling and tunneling will be active also when using 3GPP access technologies causing extra signaling as well as tunneling overhead to user data packets.

Beyond the immediate effects on performance, the integration or separation of the anchor points have implications, for example, related to the complexity of the PCC support in the architecture, and the flexibility in the architecture options available to operators, but that issue is not discussed in this clause.

The separation of the anchor points may also be considered as a means to make it easier to potentially introduce support for enhancements such as hierarchical mobility concept.

Note that a serving access node for non-3GPP IP access (such as a PDG or a similar entity) may be located in the evolved packet core but is not shown in the figure. Such an entity would be required in the network-based mobility concept to update the route on behalf of the UE.

Resmed Corp. - Ex. 1037
Page 54

The following points shall also be considered in the selection process of the above alternatives:

1. Whether the availability and maturity of the relevant IETF standards affects the solution preference.

2. Whether the selection should be aligned with solution selected in non-3GPP access technologies, e.g., the mobility mechanism selected in the WiMAX forum.

3. Whether the solution provides satisfactory handover performance.

7.8.3.2.2 Additional solution aspects

Another aspect of the solution is the selection of address, network interface and IP access service used by the UE for the connection. Destination and source address selection are functions of the TCP/IP stack and may be out of scope for SAE (FFS). Network interface selection may utilize a virtual network interface to hide access changes from the rest of the TCP/IP stack, and this may also be out of scope for SAE (FFS). The selection of IP access service is related to SAE access bearers and connectivity to multiple PDNs, which are described in separate key issues. The solution should align with PDN selection mechanism of 3GPP access systems.

Furthermore, the solution should allow the use of a SAE Anchor, which is the anchor for mobility between 3GPP and non-3GPP access systems, as an anchor for mobility between two non-3GPP access systems. Although the specification of such mechanisms is out of scope for 3GPP, the solution should not preclude performing this according to a hierarchical mobility concept where the two non-3GPP access systems support local mobility protocols, given that both non-3GPP access systems provide sufficient security for handover signalling and user data traffic.

7.8.3.2.3 MIP version implications

Independent of the above architectural aspects, Mobile Ipv6, Mobile Ipv4 or both can be used to execute mobility toward non-3GPP accesses. The use of either MIPv4 or MIPv6 (or both) mostly depends on the expected use of IP versions and is not strictly based on the merits of the individual Mobile IP protocol versions.

In the absence of mechanisms addressing the lack of native backwards compatibility of Mobile Ipv6 with Ipv4, the support for already deployed Ipv4 services and networks results in the following alternatives:

- A transition (dual stack UE, tunneling from UE) mechanism is necessary if accessing Ipv6-only services from an Ipv4-only access network. In order to avoid transition tunnels over the access network, it may be more feasible to use MIPv4 with a transition mechanism on the service-side of the HA, such as protocol translation.

- Mobility is not possible between Ipv4-only and Ipv6-only access networks.

- For Ipv4-only services it is possible to use Mobile Ipv4 to avoid an additional transition mechanism on the “service-end” of the HA.

Mobile Ipv4 has similar limitations associated with applicability in the presence of Ipv6, either in the UE connectivity-side or the service-side of the HA. However it is worth to note that in the case of Mobile Ipv4 the first point mentioned above is a reversal of the IP versions in services and access network, i.e. only relevant in the presence of an Ipv6-only access network.

It is expected that most SAE-capable Ues will have a dual stack supporting both Ipv4 and Ipv6, and therefore using both MIPv4 (for Ipv4 connections) and MIPv6 (for Ipv6 connections) is possible. This will however require additional mobility signalling at handover. The cost to administer two mobility protocols in parallel may also be higher due to additional configuration (e.g. in order to manage security associations) in the UE and HA. If local network optimizations are used, they may need to be implemented for both MIPv4 and MIPv6.

Another possible approach is to adopt dual-stacked Mobile Ipv6 (DS-MIPv6) solution which is being drafted in IETF (draft-ietf-mip6-nemo-v4traversal-01.txt). When this solution is available, it will allow connectivity and mobility across any IP version, and access to services of any IP version, without additional transition (tunneling) mechanisms. The solution is not particularly well suited for Ipv4-only terminals, but adaptation of the solution could be studied further if needed. It should be noted that the MIPv6 solution with Ipv4 extensions can be deployed in today's Ipv4 networks, and does not require deployment of Ipv6 in existing networks.

In summary, the following implementation alternatives are possible to enable mobility for both Ipv4 and Ipv6 (the effect of PDG on these alternatives is FFS):

Resmed Corp. - Ex. 1037
Page 55

1. MIPv4 and DS-MIPv6
   Consequences: two protocols need to be supported in the mobility anchor and in the mobile node (UE).

2. DS-MIPv6 only
   Consequences: not compatible with MIPv4 only clients.

3. MIPv4 and MIPv6
   Consequences: two protocols and architecture need to be supported in the mobility anchor. Not possible to serve Ipv6 traffic over an Ipv4 access network (and vice versa). Mobility between Ipv4 and Ipv6 access networks is not supported.

7.8.3.2.4 Use of local mobility protocols

A further possibility is the use of a hierarchical mobility concept including a global mobility protocol and a local mobility protocol. The global mobility protocol handles mobility events across access systems by associating the global IP address with the new local IP address at a fixed global mobility anchor, and forwarding UE traffic to the local IP address allocated by an access system. UE handovers within the access system are managed using a local mobility management protocol.

In Mobile IP, the UE obtains a care-of-address (CoA) and performs a MIP registration with the HA (SAE Anchor) to bind its current CoA to the HoA. In the hierarchical mobility concept (network-based mobility), the local mobility anchor sends a Route Update towards a global mobility anchor (SAE Anchor) triggered, for example, by IP Bearer Establishment signalling between the UE and the local mobility anchor. The global IP address of the UE does not change.

In summary, the following alternatives are possible:

1. MIP as a global mobility protocol, without an additional local mobility protocol, using only a common Home Agent.
   Consequences: UE needs to perform mobility signalling with every handover in the access-network. There is overhead from Mobile IP tunneling when the UE is not performing handovers between access systems.

2. MIP as a global mobility protocol and one of the local mobility protocols in the non-3GPP access system, using both a common Home Agent as a global mobility anchor, and separate local mobility anchors for the access-system.
   Consequences: There is less overhead and less signaling between the UE and the network when the local mobility protocol is used. Note that unless the local mobility protocol is used as the LTE mobility mechanism, there is no improvement for the UE when performing handovers between access systems, moreover not all non-3GPP access networks support the particular local mobility protocol.

3. One of the network-based mobility protocols (as a global mobility protocol and any local mobility protocol supported in the access system), using SAE Anchor as a global mobility anchor and separate local mobility anchors for each access system. MIP is used for access systems that do not support the selected network-based mobility protocol. Note that this means that the network-based mobility anchor for global mobility and the MIP HA both are located in the SAE Anchor.
   Consequences: There is less overhead and less signalling between the UE and the network when the UE is not participating in network-based mobility signalling, which also reduces the need for security credentials shared between the UE and the global mobility anchor. However, if MIP is used for access systems that do not support the network-based mobility protocol, such security credentials are still needed in the UE. Network domain security can be used to secure signalling over an untrusted network (e.g. between HPLMN and VPLMN). There are potential security concerns (from the perspective of user plane confidentiality and network topology hiding) if operator decides to allow handover to/from WLAN Direct IP Access.

7.8.3.3 Comparison of different mobility management schemes

The following alternatives are currently considered for mobility between 3GPP and Non-3GPP systems:

Host-based Mobility Management Solutions

1. MIPv4 with FA-CoA [23]
2. MIPv4 with Co-CoA [23]

Resmed Corp. - Ex. 1037
Page 56

3. MIPv6 [24]
4. HMIPv6 [31]
5. DSMIPv6 [27]
6. DSMIPv4 [32]

Network-based Mobility Management Solutions

7. NETLMM [12]
8. PMIPv4 [26]
9. PMIPv6 [17, 33]

The main SAE requirements listed in clause 5 for the evolved 3GPP Mobility Management are applicable for mobility between 3GPP and Non-3GPP systems as follows:

Requirement 1: The Evolved 3GPP Mobility Management solution shall be able to accommodate terminals with different mobility requirements (e.g.: fixed, nomadic and mobile terminals).

Requirement 2: The Evolved 3GPP Mobility Management should allow optimized routing for user-to-user traffic (including communication towards Internet and PSTN users, e.g.: via local break-out) and in all roaming scenarios (e.g.: when both users are in a visited network).

Requirement 3: The Evolved 3GPP System shall support Ipv4 and Ipv6 connectivity. Interworking between Ipv4 and Ipv6 terminals, servers and access systems shall be possible. Mobility between access systems supporting different IP versions should be supported.

Additional SAE requirements listed (not specific to mobility management) in clause 5 that should be considered:

Requirement 4: Transport overhead needs optimization, especially for the last mile and radio interfaces.

Editor's Note: The above list is not complete and further requirements can be added.

The advantages and disadvantages of different schemes are tabulated below:

Scheme	Advantages	Disadvantages	Requirements Satisfied	Requirements Not Satisfied Natively
MIPv4 FA-CoA	• Mature mobility management protocol (in IETF) • Need to allocate only one CoA for all UE	• Handover interruption time may not meet the requirements for some types of flows, e. g., real time flows. • Additional signalling overhead over the air as UE needs to perform MIP binding updates both periodically as well as for every handover • All terminal need to necessarily implement MIPv4 stack • Inefficient routing (triangular routing) • Core network elements need to support FA	Requirement 1 Requirement 4	Requirement 2 Requirement 3

Resmed Corp. - Ex. 1037
Page 57

		functionality		
MIPv4 Co-CoA	• Mature mobility management protocol (in IETF) • Lesser impact on core network terminals as FA functionality need not be implemented • Need to allocate one CoA for each UE leading to limitation in availability of IP address	• Handover interruption time may not meet the requirements for some types of flows, e. g., real time flows. • Additional overhead in the air due to tunnel between HA and UE • Additional signalling overhead over the air as UE needs to perform MIP binding updates both periodically as well as for every handover • All terminals that desire IASA mobility need to necessarily implement MIPv4 stack • Inefficient routing (triangular routing)	Requirement 1	Requirement 2 Requirement 3 Requirement 4 **Note:** This can be achieved based on additional mechanisms
MIPv6	• Mature mobility management protocol (in IETF) • Can support route optimization • Supports optimizations like FMIP [9] and HMIP • Less impact on core network terminals since FA functionality need not be implemented	• Handover interruption time may not meet the requirements for some types of flows, e. g., real time flows. **Note:** Optimizations such as FMIP [9] and HMIP can be used, to enable fast handover • Additional overhead in the air due to tunnel between HA and UE or Home Address Option • Additional signalling overhead over the air as UE needs to perform MIP binding updates both periodically as well as for every handover • All terminals that desire inter access mobility need to necessarily implement MIPv6 stack	Requirement 1 Requirement 2	Requirement 3 Requirement 4 **Note:** This can be achieved based on additional mechanisms
NetLMM	• Little mobility signaling over the	• Impact on core network elements as	Requirement 1	Requirement 3

Resmed Corp. - Ex. 1037
Page 58

	air interface for inter-access mobility • Since mobility signaling is handled locally (only involving network entities), the HO interruption time is potentially smaller • UE does not need to implement MIP stack	they need to implement NetLMM stack • Cannot support Ipv4 only core network in initial release	Requirement 2 Requirement 4	
Proxy MIP	• Little mobility signaling over the air for inter-access mobility • Since mobility signaling is handled locally (only involving network entities), the HO interruption time is potentially smaller • UE does not need to implement MIP stack	• Impact on core network elements as they need to implement proxy mobility agent is needed • Specification status for Ipv6 unclear (solution not accepted by IETF NetLMM WG) • Proxy agent needs to run at least as many instances of MN client as the number of UE's.	Requirement 1 Requirement 2 (for PMIPv6 alone) Requirement 4	Requirement 3
DS-MIPv6	• Supports mobility of Ipv6 terminals in Ipv4 networks • Supports both private and public Ipv4 visited access networks	• Cannot support Ipv4 only terminal • Handover interruption time may not meet the requirements for some types of flows, e. g., real time flows	Requirement 1 Requirement 2 Requirement 3 (for Ipv6 capable terminals)	Requirement 4 **Note:** This can be achieved based on additional mechanisms

Editor's Note: The above table is not complete and more requirements and mobility management options can be added.

7.9 Key Issue – Default IP Access Service

7.9.1 Description of Key Issue – Default IP Access Service

The Default IP Access Service provides the basic "always-on" IP packet bearer service. It is expected to be used for user data that do not require any service specific policies or charging rules. Such user data are, for example, satisfied by default QoS and flat rate/bundled charging, as described in a separate Key Issue. The Default IP Access Service is described by a default context in the network, and possibly in the UE. User data requiring service specific policies or charging are supported by additional IP access services.

Resmed Corp. - Ex. 1037
Page 59

The Default IP Access Service is established for a UE immediately after the subscriber has been authenticated and authorized by the network. The Default IP Access Service provides the UE with Ipv6 and/or Ipv4 connectivity to operator services, other Ues, private IP networks, or the Internet. The Default IP Access Service supports mobility of the terminal.

7.9.2 Solution for Key Issue – Default IP Access Service

- A Default IP Access Service in the serving (access) network is established within a single attach procedure that includes authentication and authorization of the user. It shall be possible that any user specific information about the Default IP Access Service, such as policies or configuration parameters, are received from the subscriber databases in home network, such as HSS or/and Subscription Profile Repository.
- It is FFS how the subscriber-specific policies or configuration parameters are transferred from the home network to the serving (access) network.
- The Default IP Access Service for roaming users in the serving (access) network can be modified by the home operator.
- The Default IP Access Service shall provide the UE with at least one Ipv6 address or one Ipv4 address allocated or assigned by the network, together with necessary IP configuration parameters.
- It is FFS how Default IP Access Service(s) provide Ipv6 and/or Ipv4 connectivity for a dual stack UE.
- It is FFS whether the IP address is allocated or assigned statically or dynamically.
- The Default IP Access Service(s) shall provide IP connectivity to the networks permitted under applicable policies and roaming restrictions without excluding local breakout.
- For roaming case, whether the default IP address can be allocated by VPLMN or HPLMN should be based on the home operator' roaming policy and the roaming agreement between home operator and visited operator.

NOTE: If the default IP address is allocated by HPLMN, this IP address should be the home address in the case of MIP solution.

- The Default IP Access Service shall allow for UE registration to the IMS, at least for services that do not require better than default QoS and differentiated charging.
- It is FFS how and when the IMS registration is performed and what kind of IMS services is provided to the UE within the Default IP Access Service.

7.9.3 Impact on the baseline CN Architecture

FFS.

7.9.4 Impact on the baseline RAN Architecture

FFS.

7.9.5 Impact on terminals used in the existing architecture

FFS.

7.10 Key issue – IP connectivity with multiple PDNs

7.10.1 Description of Key Issue – IP connectivity with multiple PDNs

According to 3GPP UMTS standards, the scenario where the UE has access (either concurrently or successively) to several Packet Data Networks or Service Domains is possible, using one or more GGSNs as requested by the MS. Each

Resmed Corp. - Ex. 1037
Page 60

PDN/Service Domain is identified by an Access Point Name (APN) as defined in TS23.003. The SGSN resolves the APN to an address that identifies a GGSN, and the GGSN can resolve the PDN/Service Domain. If that GGSN is unavailable, the APN name resolution normally provides a second choice GGSN address.. In the following, the term IP Gateway is used to describe the function with the capability of connecting with PDNs/Service Domains.

This key issue clarifies whether the UE will have a relation to a single or multiple IP Gateways in order to obtain concurrent connectivity to several PDNs/Service Domains, and whether one or multiple IP addresses are provided by an IP Gateway.

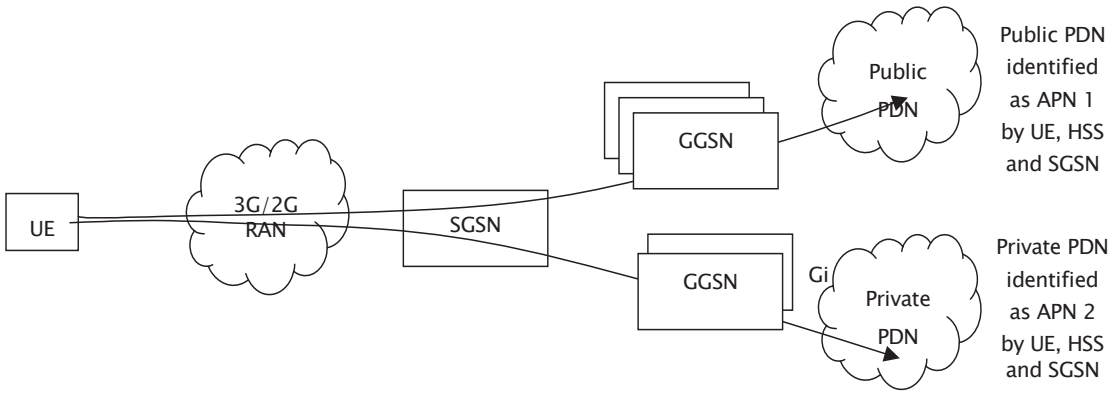

Figure 7.10-1: Multi-APN support in pre-SAE/LTE access systems

It should be studied whether and how the SAE architecture can support the following non-exhaustive list of use cases, or combination of use cases:

1. **UE accesses a single PDN**: This is not a use case involving multiple PDNs/Service Domains, but is included for the purpose of comparisons with the solutions presented in other use cases.
   Assumptions: It is anticipated that a UE will typically have connectivity to only a single PDN at a time. This always-on IP connectivity is enabled by establishing a basic IP service during the Network Attachment procedure.

2. **UE accesses both Ipv4 and Ipv6 PDNs**: A UE could access both Ipv4 and Ipv6 PDNs/Service Domains, e.g. if Ipv4 and Ipv6 traffic is routed from the UE to Ipv4 and Ipv6 server clusters in different physical locations.
   Assumptions: It is anticipated that support of concurrent Ipv4 and Ipv6 service usage is still needed because of legacy Ipv4 support and new Ipv6 services.

3. **Corporate PDN and IMS services in separate trust domains:** Corporate employees may wish to use the LTE/SAE access system available in corporate premises for access to corporate services, while using the UE for IMS based telecommunications such as phone calls. The IMS traffic should comply with the requirements of the operator trust domain in order to secure charging and LI while the corporate traffic should be securely and efficiently routed.
   Assumptions: It is anticipated that access to corporate services needs to be securely separated.

4. **Corporate PDN and other services in separate trust domains**: When working remotely away from the corporate site, a corporate employee may access corporate services. This corporate traffic should remain securely separated from other PDNs/Service Domains such as public Internet, or Device Management to the UE performed by the home operator.
   Assumptions: It is anticipated that access to corporate services needs to be securely separated.

5. **UE mobility between access systems**: UE mobility between access systems such as LTE, 2G/3G or I-WLAN, or between operators.
   Assumptions: It is anticipated that mobility between 3GPP access systems and between 3GPP and non-3GPP access systems needs to be efficiently supported. The detailed performance requirements are described in other key issues.

6. **Roaming cases**: In some roaming cases, the UE could use the VPLMN for access to visited network services such as public Internet or IMS emergency sessions (for pre-SAE/LTE access systems TR 23.867 requires a globally dedicated APN), while operator services can also be provided in the HPLMN.
   Assumptions: It is anticipated that the home network informs the current visited network of the UE about

Resmed Corp. - Ex. 1037
Page 61

whether access to local PDNs other than the PDNs connected to the home network, including visited services or local breakout, is supported. The allowance of the access to the visited services and/or local breakout is based on agreements between the visited and home operators, and the user's subscription.

7. **Separate private address spaces**: Some of the PDNs/Service Domains may use private address spaces instead of public addresses.
   Assumptions: It is anticipated that the private address spaces of the multiple PDNs/Service concurrently accessed by a UE may overlap with each other.

Based on the above use cases, concurrent access to several PDNs/Service Domains appears to be required in SAE.

Consistent behaviour for applications across different access technologies should also be considered.

The configuration describing the connectivity of a UE to a set of PDNs/Service Domains may be received from the HSS/HLR, pre-configurations in the IP Gateway, by mediation of PCC mechanisms, or a combination of these mechanisms.

The UE need not be aware of the default configuration that provides default PDN/Service Domain connectivity to the UE, but the UE may request a configuration to be used instead of that default configuration for other connectivity than the default PDN/Service Domain. The use of configuration other than the default configuration depends upon operator configuration and the user's subscription.

7.10.2 Solution for Key Issue IP connectivity with multiple PDNs

7.10.2.1 Working Assumptions

When the UE operates using multiple PDNs there will be only one UPE in the evolved packet core per UE that terminates user plane protocols for header compression and ciphering, and initiates paging.

Regarding the proposed solution alternatives, the following concerns should be considered due to the working assumption above;

- Under the assumption above the user plane data for Ues connected to multiple PDNs may for some PDNs be routed via two user plane nodes in the evolved packet core network as opposed to one node in the single PDN case.
- Depending on migration, deployment scenarios and performance there may be a need to perform functions like charging, policing etc. in the nodes terminating the Gi interface.
- For proposed solutions relying on MIP4 (RFC 3344) and MIP6 (RFC 3775) on the S5/S8 reference points this working assumption implies that the UPE shall support both Ipv4 and Ipv6. This is not needed if dual-stack MIPv6 is used.
- The UPE (terminating ciphering etc.) will be selected when the UE connects to the first PDN (i.e. at Attach). The UPE may be optimised for that PDN (e.g. it may be combined with a IASA, and be a complex node that supports Flow Based Charging, content control, etc, for services such as MMS/IMS). If a second PDN connection is needed for access to, for example, a corporate customer using end-to-end encryption and high-volume traffic, the same node has to be reused, while in a multiple UPE scenario, a different and less complex UPE and IASA could be used for this second PDN connection.
- The use of a single UPE per UE may cause the UPE to be moved physically closer to the radio interface than current GGSNs. The impact of this on operators is unclear. This should be considered as part of the migration discussion.

The assumption and the detailed functional allocation between the different user plane nodes will be further elaborated with the addition of more use cases for multiple PDNs.

7.10.2.2 Solution alternatives

This chapter is a work in progress. It is FFS how the solutions interwork with pre-SAE systems.

Resmed Corp. - Ex. 1037
Page 62

It is important that the solutions to use cases minimize the complexity of the mechanisms required for managing multiple configurations and contexts in the UE and the network, which currently involves multiple APNs and PDP addresses in the UE.

IP connectivity with multiple PDNs to each of the described use cases can be provided with one or more of the following solution alternatives.

- **Single Ipv4 and Ipv6** access service supporting concurrent Ipv4 and Ipv6 addresses and service usage for dual stack terminals. When used, this saves network resources and removes the need for UE to select the correct access service depending on the IP version. The UE is aware of the IP version(s) supported by each access service.

- **Single APN** configuration: The term Single APN signifies access to one or more PDNs/Service Domains from the UE point of view (and may include traffic separation rules) supporting all types of PDNs, i.e. Operator PDN, Corporate or Private PDN and also Public Internet PDN. This allows the connectivity for a UE to be provided using only one APN which has the same structure as APN in the IP Gateway. User data traffic separation into the different PDNs can be performed in the network and be transparent to the UE.

- **Network based selection** of the single APN configuration to be used for the UE in the IP Gateway based on subscription information, or potentially by policy control means. Allowed access for the UE can be defined per APN.

- **UE indication of IP version** of access service to the IP Gateway when establishing a new SAE bearer service, i.e. whether the IP access service is iPv4, Ipv6 or both.

- **UE indication of** a specific additional **APN** to the IP Gateway, e.g. if needed for emergency session.

- **NAT** between the IP Gateway and external PDN in case different address types and/or ranges are used. NAT enables also access to multiple instances in parallel, e.g. access to multiple private PDNs at the same time. Internet PDN uses public IP addresses, whereas operator and corporate/private PDNs may use private or public addresses. NAT enables access to multiple private address spaces and may include interoperability between Ipv6 and Ipv4. Providing NAT functionality in the IP Gateway can also improve service access by providing to the UE all services, including corporate services via e.g. L2TP tunnel, within the operator PDN IP address space. Awareness of NAT in the UE and effects to network management need to be considered. Generally mandatory usage of NAT and NAT like devices is discouraged due to various concerns, some of which are documented in the TR 23.981.

- **Routing** of IP packets **in the UE** between applications and IP connections in order to handle overlapping IP address spaces, or service access over multiple network interfaces.

- **VPN client in UE** with support for NAT traversal on top of LTE/SAE access to establish a secure tunnel to a Corporate or Private PDN. The client can use split tunnelling by downloading specific network routes that allow it to route only the Corporate or Private PDN traffic to the tunnel.

- **Network based VPN** similar to specifications in TS 29.061 and TS 29.161.

- **Operator policies** on QoS and flow based charging may be applied to differentiate between services. In the case of split tunnelling in UE, this can be applied in conjunction with forced routing to specific next-hop routers to differentiate between the non-tunneled and VPN tunnelled traffic.

- **IP access** service **via SAE anchor** node(s) **for 3GPP HO** between 3GPP accesses when the SAE capable UE is in pre-SAE/LTE 3GPP access system and SAE anchor(s) is available, and not towards pre-SAE/LTE GGSN. This allows the UE to make handovers between 3GPP access systems.
  Note: This has dependencies with key issue 7.8.2

- **IP access** service **via SAE anchor** node(s) **for non-3GPP HO** between 3GPP and non-3GPP access when the SAE capable UE is in non-3GPP access systems and SAE anchor(s) is available. This allows the UE to make handovers between 3GPP and non-3GPP access systems.
  Note: This has dependencies with key issue 7.8.3

- **Dedicated IP Gateway** may be used for each PDN/Service Domain by routing the user plane via the IP Gateway for that PDN/Service Domain.
  Note1: User plane is always routed via an IP Gateway and UE needs to support at least one IP Address per PDN

Resmed Corp. - Ex. 1037
Page 63

- **Mobile IP tunnel**: Mobile IP (MIP) tunnelling is used to reach the external PDN, where IASA containing a MIP Home Agent (MIP HA) serves as a gateway to the PDN. There are as many IASAs (i.e. MIP Has) as there are different external PDNs in parallel. The MIP Care-of Address (CoA) is assigned from the UPE address space. The MIP Home Address (HoA) to access each particular external PDN is allocated from the PDN address space. Both MIP4 and MIP6 may be supported simultaneously (requiring dual stack UPE), or alternatively, DS MIP6 may be used instead. In the non-roaming case, the reference point S5 between UPE and IASA is exhibited only when the UPE has no direct access to a particular PDN. When using a non-3GPP IP access, the UE can access multiple PDNs via multiple instances of the MIP based S2 reference point which has identical functionality as S5 and S8.

  Note 1: This has dependencies with key issue 7.8.3

  Note 2: User plane is always routed via a Home Agent and UE needs to support at least one Home Address per PDN

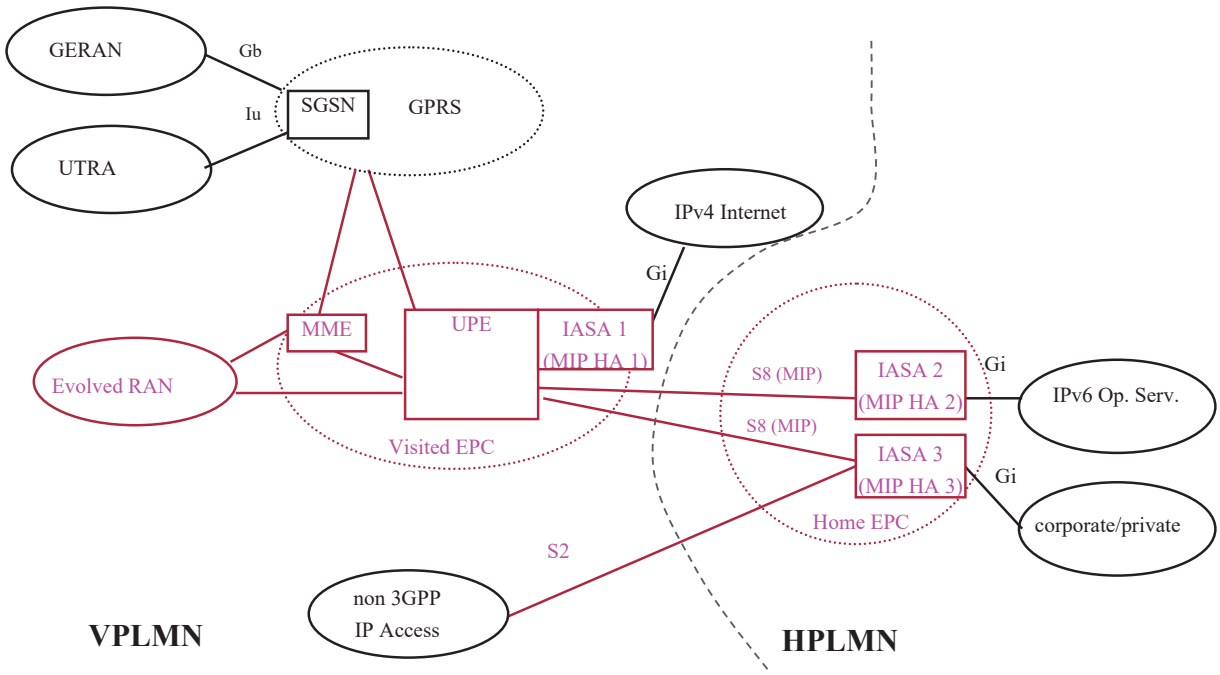

Figure 7.10-2: Mobile IP tunnel solution in roaming case

- **Proxy MIP**: SAE-capable UE can get access to multiple PDNs using different IP addresses (Home Address) assigned by different IASAs. An IASA can be implemented as a Mobile IP Home Agent (HA) and the address assignment can be performed using Proxy Mobile IP signalling, with MME/UPE acting as a Proxy MIP (P-MIP) Client. The proposed solution works both with IPv4, Ipv6 and Dual stack Has. The P-MIP signalling can be used to get a PDN IP address (Home Address) obtained at network attachment or based on explicit PDN IP address request (e.g.: using DHCP negotiation) from the UE. Data from UE are sent directly to the UPE using the Home Address as source address. Then UPE encapsulates packets towards the correct IASA

  Note 1: access to multiple PDNs from a non-3GPP system with this solution requires P-MIP support in the non-3GPP system

  Note 2: This has dependencies with key issue 7.8.3

  Note 3: User plane is always routed via a Home Agent and UE needs to support at least one Home Address per PDN

Resmed Corp. - Ex. 1037
Page 64

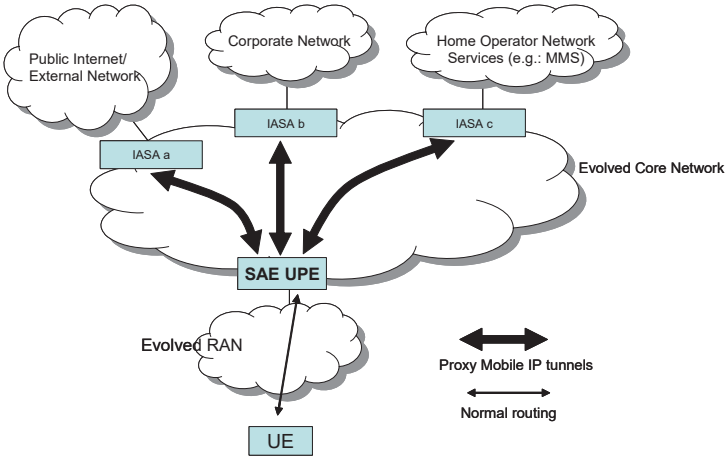

Figure 7.10-3: Proxy MIP solution

- **NAT Solution**: It is not possible or very inefficient to support the corporate services by tunneling between UE and corporate. The solution uses the single APN approach that supports all types of PDNs, i.e. Operator PDN, Corporate or private PDN and also Public Internet PDN. NAT enables also interoperation between the different PDNs in case different address types and or ranges, and in case of access to multiple private PDNs at the same time. An APN defines the concurrent access possibilities to different PDNs. Allowed access is defined per APN and controlled by subscription or policy control means. PDNs may use Ipv4 or Ipv6 addresses. Internet PDN uses public IP addresses. User data traffic separation into the different PDNs is performed in the network only.

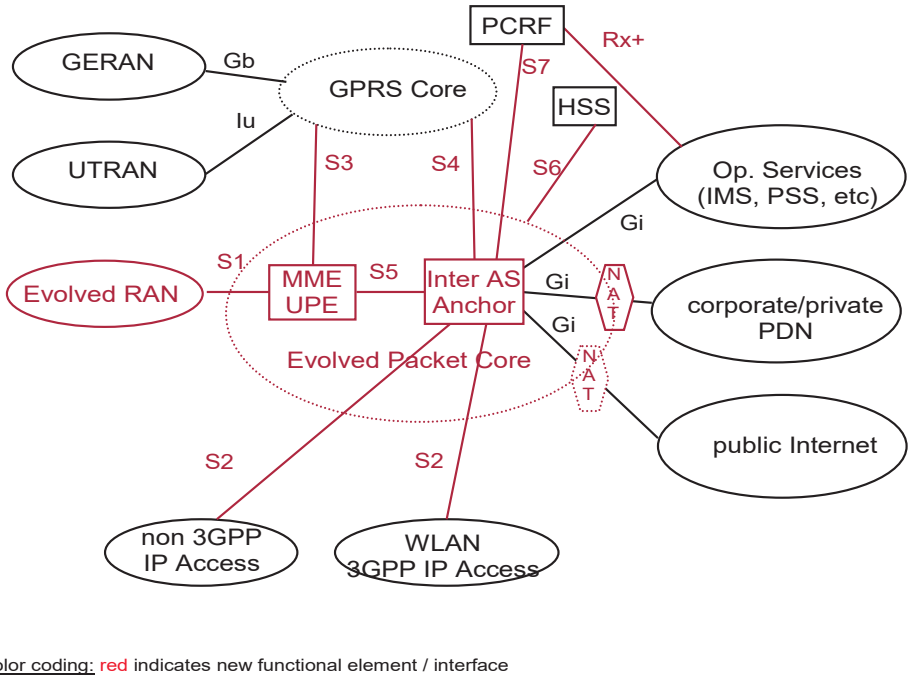

Figure 7.10-4: NAT Solution

7.10.2.3 Alternative solutions for the use cases

FFS.

7.10.3 Impact on the baseline CN Architecture

Editors Note: It is FFS whether there is any particular impact.

Resmed Corp. - Ex. 1037
Page 65

7.10.4 Impact on the baseline RAN Architecture

Editors Note: It is FFS whether there is any particular impact.

7.10.5 Impact on terminals used in the existing architecture

Editors Note: It is FFS whether there is any particular terminal impact.

7.11 Key Issue – Functions in the evolved packet core

7.11.1 Description of Key Issue – Functions in the evolved packet core

The functions in the evolved packet core (as defined by Figure 4.2-1) are listed below. Depending on the deployment scenario, some of these functions might be optional. Note that this is not the exhaustive list of the all functions required in the evolved packet core and other functions identified later can be added.

- IP access service enabling functions such as IP address allocation.
- Packet routing and forwarding, including management and storage of user plane UE context describing IP bearer service and internal routing information.
- Policy and Charging Enforcement Function (PCEF) based on TS 23.203, including termination of Gx+ interface according to the PCC architecture and termination of the Gy = Ro interface with the on-line charging server.
- Collection of Charging Information for online or offline charging systems, including support for bearer and flow based charging for IP services, and for session based services.
- Mobility Anchor for mobility between different 3GPP based accesses (SAE/LTE and pre-SAE/LTE).
- Mobility Anchor for mobility between 3GPP accesses and non 3GPP accesses.
- Management and storage of UE control plane context, including generation of a temporary identity and mapping it to a permanent identity (e.g. IMSI).
- Mobility management, including determination of tracking areas and allowed PLMNs for handovers, and registration and tracking of LTE_IDLE state Ues.
- Authentication, authorization and key management, including HSS/AAA interaction.
- Lawful interception of user plane traffic.
- Lawful interception of signaling traffic.
- Gateway functionality to external networks, including support for Network Address Translation (NAT) and Firewall.
- Content control, etc.
- Multicasting traffic to multiple Ues.

The following functions are above eNodeB, and therefore in the evolved packet core if the RAN has no other entities than eNodeB. If there are other RAN entities than eNodeB, their inclusion is FFS:

- Ciphering termination for user plane traffic.
- Ciphering/integrity termination for NAS signaling.
- IP Header compression.

Inclusion of the following functions is FFS:

- Termination of LTE_IDLE state UE traffic on the downlink data path and paging requests.

Resmed Corp. - Ex. 1037
Page 66

To have a concrete architecture of the evolved packet core, the grouping of the functions into functional entities in the evolved packet core needs to be studied.

7.11.2 Solution for Key Issue – grouping of the functions

7.11.2.1 Allocation of evolved packet core functions to UPE, MME and Inter-AS Anchor

The below non-exhaustive lists present the allocation of evolved packet core functions to logical entities, for the purposes of comparing the grouping alternatives. This does not preclude solution alternatives that co-locate one or more of the logical entities. Depending on the deployment and roaming scenarios, some of these functions might be optional.

The UPE consists of the following functions:

- Packet routing and forwarding: For intra-UPE handovers without MME change, the control for eNB to UPE tunnel movement occurs directly between the eNB and UPE without passing through the MME;
- Depending on solution: allocation of a local IP address from the UPE address space for use by mobility mechanisms;
- FFS: Policy and Charging Enforcement Function (PCEF) based on TS 23.203 for roaming scenarios;
- Depending on solution: Policy and Charging Enforcement Function (PCEF) based on TS 23.203 for route optimisation scenarios;
- Depending on solution: Collection of Charging Information for online or offline charging systems for roaming with home routed traffic. The UPE generates CDRs and delivers CDRs to charging systems without passing MME;
- Depending on solution: Collection of Charging Information for online or offline charging systems when route optimisation is applied. The UPE generates CDRs and delivers CDRs to charging systems without passing MME;
- Ciphering termination for user plane traffic;
- IP Header compression;
- Depending on solution: Lawful interception of user plane traffic. LI data are delivered without passing MME; LI control on UPE is independent from MME;
- Inter-eNodeB Mobility Anchor for user plane;
- Depending on solution: inter-3GPP access system Mobility Anchor;
- Trigger/initiation of paging when downlink data arrive for the UE in LTE_IDLE state.
- FFS: Routing path establishment/change with IASA

The MME consists of the following functions. In some architecture solution alternatives, these functions may be co-located with the UPE:

- Management and storage of UE control plane context;
- Mobility management;
- Authentication, authorization (PLMN, TA) and key management;
- Lawful interception of signaling;
- The MME terminates and handles UE NAS signaling; NAS signaling is not relayed via UPE; NAS signaling means direct signaling between UE and entities above eNB;
- Ciphering/integrity termination for UE NAS signaling;
- Management and allocation of temporary user identities;

Resmed Corp. - Ex. 1037
Page 67

- Depending on solution: control plane function for inter-3GPP access system mobility.

The Inter-AS Anchor consists of the following functions. In some architecture solution alternatives, these functions may be co-located with the UPE:

- Packet routing and forwarding;
- Depending on solution: Authentication, authorization and key management, for mobility management signaling or for PDN access control;
- Policy and Charging Enforcement Function (PCEF) based on TS 23.203;
- Collection of Charging Information for online or offline charging systems;
- Generation of CDRs and delivery to charging systems;
- Mobility Anchor for mobility between 3GPP accesses and non 3GPP accesses;
- Gateway functionality to PDN including IP address allocation from PDN address space;
- Depending on solution: inter-3GPP access system Mobility Anchor;
- Lawful interception of user plane traffic.

7.11.2.2 Alternative 1

7.11.2.3 Alternative 2

7.11.2.4 Alternative …

7.11.3 Impact on the baseline CN Architecture

The baseline CN architecture is modified to reflect the functional grouping in the evolved core network.

7.11.4 Impact on the baseline RAN Architecture

The baseline RAN architecture is modified to be based on the functional split between RAN and CN.

7.11.5 Impact on terminals used in the existing architecture

FFS.

7.12 Key Issue QoS concepts

7.12.1 Terminology

The term *Application Function* (AF) is defined in TS 23.207 [19]. The terms *Policy and Charging Rules Function* (PCRF) and *Policy and Charging Enforcement Function* (PCEF) are defined in TS 23.203 [20].

A *dedicated SAE bearer* is associated with uplink packet filters in the UE and downlink packet filters in the PCEF where the filters only match certain packets. A *default SAE bearer* is associated with “match all” uplink and downlink packet filters in the UE and the PCEF, respectively.

Resmed Corp. - Ex. 1037
Page 68

An SAE bearer is referred to as a *GBR SAE bearer* if dedicated network resources related to a Guaranteed Bit Rate (GBR) value that is associated with the SAE bearer are permanently allocated (e.g. by an admission control function in the eNB) at SAE bearer establishment/modification. Otherwise, an SAE bearer is referred to as a *Non-GBR SAE bearer*.

A dedicated SAE bearer can either be a GBR or a Non-GBR SAE bearer. A default SAE bearer shall be a Non-GBR SAE bearer.

An *operator controlled Rx service* is a service for which the PCEF receives from the PCRF service specific uplink/downlink packet filters and service specific QoS parameters where the QoS parameters have been derived from information that the PCRF received over the Rx interface from an AF.

An *operator controlled Gx only service* is a service for which the PCEF receives from the PCRF service specific uplink/downlink packet filters and service specific QoS parameters without any interaction across an Rx interface.

NOTE: A single PCEF may realize any combination of operator controlled Rx and Gx only services on the same or different SAE bearers.

NOTE: An operator controlled Gx only service may be realized based on a default SAE bearer or a dedicated Non-GBR SAE bearer. An operator controlled Gx only service realized based on a dedicated GBR SAE bearer is FFS.

7.12.2 Description of Key Issue QoS concepts

The key issue on QoS concepts encompasses the following aspects:

- Means for providing enhanced QoS for services that require QoS or policies beyond what the default IP access bearer provides;
- An SAE/LTE QoS profile that is simple compared to the current UMTS QoS profile (i.e. UMTS bearer service attributes). Possible simplification through QoS control based on service classes shall be studied.

  At the same time complex mapping mechanisms between SAE/LTE QoS profile and the UMTS QoS profile are to be avoided. Multiple mappings between UMTS and SAE/LTE QoS profiles should not result in QoS changes.
- Signalling of QoS profiles and signalling for Resource Establishment or Resource Reservation, including the direction of such signalling procedures (i.e. Network initiated / UE initiated);

  It should also be studied whether/how the current UMTS signalling model can be simplified by deriving IP bearer level and RAN level QoS and policy configuration from QoS-related signalling that is performed on application-level (e.g. IMS). This includes study of the use of per-packet QoS-related information (e.g. DSCP markings).

7.12.3 QoS Concept

The MME/UPE/Inter AS Anchor (Access Gateway – aGW for short in this clause) will receive a PCC rule including QoS request from the PCRF each time a new service is requested by the UE. If the requested QoS can not be provided by the default IP bearer/connectivity service additional SAE bearer services are required, details about establishment are FFS.

The aGW receives from the PCRF the details about the end-to-end services that need to be transferred, i.e. filters describing the IP flows and related QoS description (at least bit rate information and a "traffic class" representing the delay/priority requirement). The aGW may generate an aggregate for each traffic class consisting of all the end-to-end-services that are mapped to the same traffic class and their combined QoS description (at least bitrate). The eNodeB receives the aggregate QoS descriptions for each SAE bearer service. Whenever an end-to-end service is going to be started/terminated/modified, the aGW receives the relevant information, updates the aggregated QoS description and forwards it to the eNodeB.

Both, UE as well as aGW perform the mapping of the end-to-end-service IP flows to SAE bearer service(s).

In order to be able to differentiate between packets belonging to different SAE bearer services the eNodeB and the aGW needs to be aware of the aggregate QoS description of an SAE bearer. The eNodeB uses it for scheduling (DL) and policing (UL) and the aGW for policing (DL+UL).

Resmed Corp. - Ex. 1037
Page 69

For downlink, the nodeB treats the IP packets according to the aggregate QoS description of the SAE bearer service. For the uplink, the eNodeB polices each IP packet against the aggregate QoS description of the SAE bearer service.

NOTE: Potential conflicts between text in this section and the text in Section 7.12.8 may need to be resolved at a later stage.

7.12.4 SAE Bearer Service Architecture

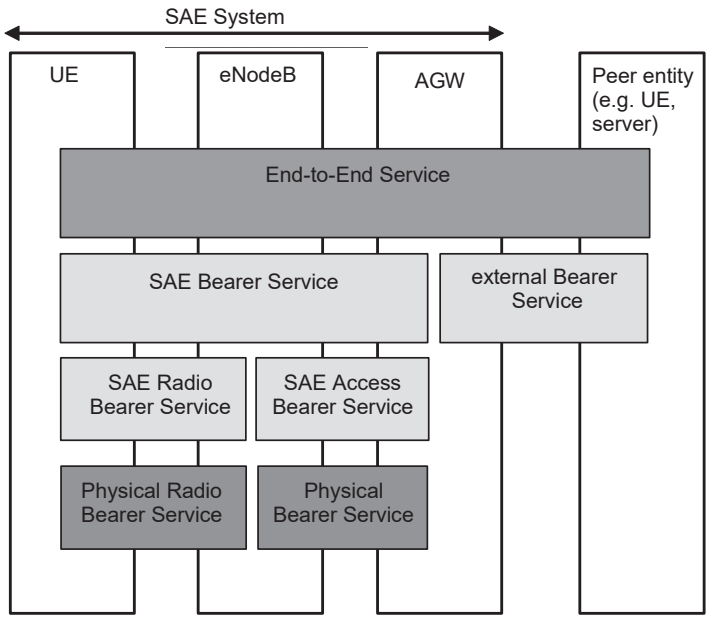

Figure 7.12-1 SAE Bearer Service Architecture

It is FFS whether one or multiple AGWs serve a UE.

The SAE bearer service layered architecture is depicted in Figure 7.12-1. The definition of a bearer service as given in TS 23.107 is still applicable:

- A bearer service includes all aspects to enable the provision of a contracted QoS. These aspects are among others the control signalling, user plane transport and QoS management functionality.

The SAE Bearer Service provides:

- QoS wise aggregation of IP end-to-end-service flows;
- IP header compression (and provision of related information to UE);
- UP encryption (and provision of related information to UE);
- if prioritised treatment of end-to-end-service signalling packets is required an additional SAE bearer service can be added to the default IP service;
- provision of mapping/multiplexing information to the UE;
- provision of accepted QoS information to the UE.

The SAE Radio Bearer Service provides:

- transport of the SAE Bearer Service data units between eNodeB and UE according to the required QoS;
- linking of the SAE Bearer Service to the respective SAE Bearer Service.

The SAE Access Bearer Service provides:

- transport of the SAE Bearer Service data units between aGW and eNodeB according to the required QoS;

Resmed Corp. - Ex. 1037
Page 70

- provision of aggregate QoS description of the SAE Bearer Service towards the eNodeB;
- linking of the SAE Access Bearer Service to the respective SAE Bearer Service.

7.12.5 Granularity of QoS Control

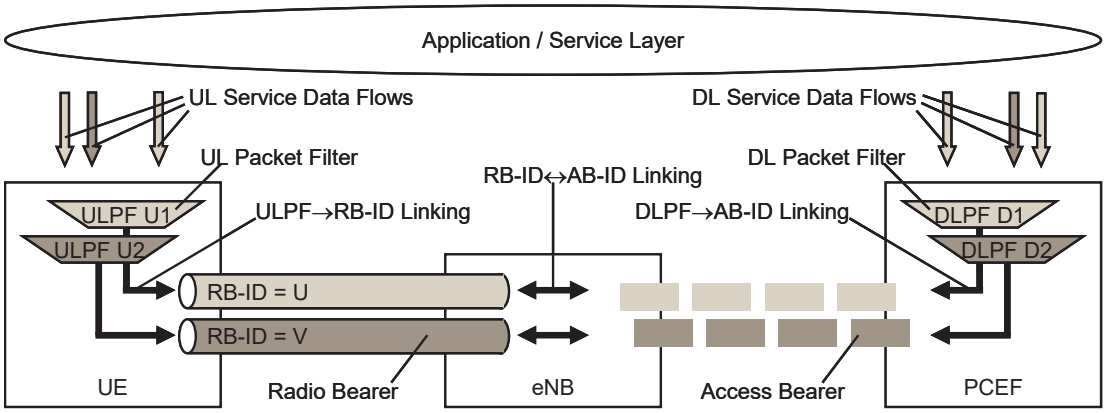

Figure 7.12-2 Two Unicast SAE Bearers Each Consisting of one SAE Radio Bearer and one SAE Access Bearer

A Service Data Flow (SDF) is an aggregate set of packet flows (see TS 23.203). An UpLink Packet Filter (ULPF) in the UE binds an SDF to an SAE Bearer in the uplink direction, and a DownLink Packet Filter (DLPF) in the PCEF binds an SDF to an SAE Bearer in the downlink direction.

Each unicast SAE Bearer is associated with one UE and one label (see clause 7.12.6).

There is a one-to-one mapping between an SAE Radio Bearer and an SAE Access Bearer.

An SAE Bearer (i.e., the corresponding SAE Radio Bearer and SAE Access Bearer) is the level of granularity for QoS control in an SAE/LTE access system. That is, SDFs mapped to the same SAE Bearer receive the same treatment (e.g,, scheduling principle). Providing different QoS to two SDFs thus requires that a separate SAE Bearer is established for each SDF.

7.12.6 The QoS Profile of the SAE Bearer

The SAE QoS profile comprises only the following QoS parameters:

- Label
- GBR (Guaranteed Bit Rate – UL + DL)
- MBR (Maximum Bit Rate – UL + DL)
- ARP (Allocation and Retention Priority)

An SAE QoS profile is associated with an SAE Bearer. The four parameters of the SAE QoS profile are only signaled from the MME/UPE to the eNB across S1 in the control plane at SAE bearer establishment / modification.

In the following we use the terms ‘GBR bearer’ and ‘Non-GBR bearer’ as defined in clause 7.12.1.

A Label is a scalar. The **Label** identifies Label Characteristics used to derive a **‘traffic handling behavior’** in the eNB. It is understood that operators require consistent traffic handling for specific services; in particular in a multi-vendor scenario and in a roaming scenario. For that reason a number of traffic handling behaviors need to be standardized (similar to the way that the so-called Per-Hop Behaviors are standardized for DiffServ, e.g. see IETF RFC 2597 [21] and IETF RFC 3246 [22]).

Resmed Corp. - Ex. 1037
Page 71

NOTE: A specification of Label Characteristics provides sufficient information that allows – together with the other above mentioned signaled QoS parameters GBR and MBR – the realization of a particular SAE Radio Bearer in an eNB. For example, such information may include a reference SAE Radio Bearer configuration (e.g. à la 34.108, e.g., including RLC mode); scheduling policy; queue management policy; packet discard timers, etc., etc.

Furthermore, it is understood that the mapping table (Standardized Label → Label Characteristics) shall be specified in 3GPP specifications.

The **GBR** applies only to GBR bearers.

The **MBR** applies to GBR bearers where MBR may be greater than or equal to GBR. The signaling of MBR for Non-GBR bearers is FFS. See Section 7.12.8 on "Aggregate Maximum Bit Rate".

GBR and MBR denote bit rates of traffic per SAE bearer while AMBR (see Section 7.12.8) denotes a bit rate of traffic per group of SAE bearers. Each of those three QoS parameters has an uplink and a downlink component.

The MME/UPE shall modify the values of the GBR, MBR, and AMBR parameters for the purpose of signaling on S1 to denote bit rates provided to/from "below" the PDCP layer. In this case the GBR, MBR and AMBR refer to a bit stream that is composed of application level data, transport protocol and network protocol headers (e.g. TCP, RTP, UDP, IP-based headers with or without IP-based header compression), and PDCP headers.

NOTE: A more precise definition of GBR and MBR, e.g. whether those parameters only denote a bit rate or additionally also a token bucket size, is left FFS.

The **ARP** applies to both GBR and Non-GBR bearers. The primary purpose of ARP is to decide whether a bearer establishment / modification request can be accepted or needs to be rejected in case of resource limitations (typically available radio capacity in case of GBR bearers). In addition, the ARP can be used (e.g. by the RAN) to decide which bearer(s) to drop during exceptional resource limitations. Once successfully established, a bearer's ARP shall not have any impact on the traffic handling (e.g. scheduling and rate control) of the traffic carried by the bearer. Such traffic handling should be solely determined by the other QoS parameters of the SAE QoS profile: Label, GBR, MBR.

NOTE: The ARP should be understood as "Priority of Allocation and Retention"; not as "Allocation, Retention, and Priority". A more precise definition of ARP, e.g. the encoding of 'retention', is left FFS.

7.12.7 Label Usage Principles

- Need two levels of mappings: (1) SDF → QCI (S7), and (2) Label → Label Characteristics:
  - The value of QCI signaled on S7 is identical to the value of Label signaled on S1
  - (1) FFS (need agreed roaming architecture first): Service Data Flows (SDFs as defined in PCC) will be mapped to a Label in the HPLMN or VPLMN for SDFs managed by the HPLMN. That mapping is done in the VPLMN for SDFs managed the VPLMN (e.g. in case of local breakout)
    - FFS: Need to standardize mapping table "well-known services" → standardized Label(s)
  - (2) Need to standardize mapping table Standardized Label → Label Characteristics
  - Use RFC4594 as an example for (1) and/or (2)
- Label Characteristics = < SAE Bearer type (GBR or Non-GBR), delay budget (left over in eNB per packet (UL+DL)); loss tolerance (of traffic per SAE bearer); other(FFS) >:

NOTE: Admission control can be performed at establishment / modification of a Non-GBR SAE bearer even though a Non-GBR SAE bearer is not associated with a GBR value (see Section 7.12.6).

  - FFS: define integer values for 'delay budget' and 'loss tolerance' or only "soft values" (e.g. low medium, high)
  - FFS: Need for additional elements defining Label Characteristics ("other(FFS)")
- The mapping standardized Label 'X' → Label Characteristics will be used by the operator owning the node (e.g. eNB) to configure node-specific parameters (e.g. scheduling weights, admission thresholds, queue management thresholds, RLC configuration, packet delay budget, etc.) associated with an SAE Bearer that itself is associated with Label 'X';

Resmed Corp. - Ex. 1037
Page 72

- Standardized Label values need to be assigned by 3GPP;
- Non-standardized Label values are outside the scope of this TR.

7.12.8 Aggregate Maximum Bit Rate

Multiple SAE Bearers can share the same Aggregate Maximum Bit Rate (AMBR). That is, each of those SAE Bearers could potentially utilize the entire AMBR, e.g. when the other SAE Bearers do not carry any traffic. The AMBR is the 'subscription MBR' stored in HSS. The AMBR is signaled from the MME/UPE to the eNB across S1 in the control plane when the UE connects to the network.

NOTE: It is FFS whether the AMBR will be signalled to the UE (in Access-Stratum and/or Non-Access Stratum).

NOTE: It is FFS whether the AMBR can be modified from the MME/UPE.

This section outlines the options for the scope of AMBR that will be considered.

- Option 1
  AMBR applies to all Non-GBR SAE Bearers of a UE. GBR SAE Bearers are outside the scope of AMBR. In this case, Non-GBR SAE Bearers do not have a separate 'per SAE Bearer MBR'.

- FFS: Option 2
  AMBR can apply to only some Non-GBR SAE Bearers of a UE. Independent Non-GBR SAE Bearers can be established with an independent per SAE Bearer MBR (signaled as part of the SAE bearer's QoS profile). GBR SAE Bearers are outside the scope of AMBR.

NOTE: For option 2 it is left FFS whether multiple groups of Non-GBR SAE bearers each with an independent AMBR can be defined.

- FFS: Option 3
  AMBR applies to all SAE Bearers (GBR and Non-GBR).

- FFS: Option 4
  AMBR can apply to only some SAE Bearers (GBR and Non-GBR). Independent SAE Bearers (GBR and Non-GBR) can be established with an independent MBR (signaled as part of the SAE bearer's QoS profile).

7.12.9 Resource Establishment and QoS Signalling

Resource Establishment and QoS Signalling handle the provisioning of QoS/policy information to the network entities that control radio/network resources. Radio/network resources are controlled applying information about the users' subscription, the UE's and the radio/network capabilities, the availability of radio/network resources, certain operator policies, and what services are being used.

It is assumed that resources can always be granted even though the requested QoS may not, i.e. the QoS can be downgraded by the network/radio. It is FFS to which extent a negotiation/re-negotiation of requested network resources shall be possible.

Resource Establishment and QoS Signalling assume a preceding signalling of QoS requirements. This could be either by application signalling (e.g. IMS) or by IP bearer signalling. It is FFS if this will lead to the establishment of additional IP bearers (comparable to UMTS PS bearers).The application signalling takes place on the already established resources of the default IP access bearer. An application function performs the negotiation with the UE on media components and their characteristics and provides the relevant information to the PCRF.

For operator-controlled services (e.g. IMS) SAE/LTE supports Network-Initiated SAE Bearer establishment and Network-Initiated SAE Bearer modification, i.e., the network controls the SAE Bearer signalling and is thus responsible for requesting the appropriate bearer QoS parameters.

NOTE: The provisioning of enhanced QoS for non-operator-controlled services is FFS

NOTE: Support in SAE/LTE for UE-Initiated SAE Bearer establishment and UE-Initiated SAE Bearer modification is FFS

The Resource Establishment is triggered by a resource request from the PCRF which translates the media information into the necessary Policy/QoS information or by IP bearer signalling which contains the Policy/QoS information. In the

Resmed Corp. - Ex. 1037
Page 73

latter case it is assumed that the network performs a QoS authorization beforehand which adds the Policy information to the bearer signalling. It is FFS whether triggering of the Resource Establishment by the PCRF should be also supported for non-IMS services.

The Resource Establishment function contains both, the functions that are needed to setup network and radio resources and the respective signalling towards the UE to bind the radio resources to the application layer and provide it with the authorised QoS.

The MME/UPE checks whether the granted resources correspond to the limits defined in the subscription profile of the user and initiates a resource assignment towards the radio part of the network.

The responsible LTE-RAN function checks the availability of resources and sets up the required resources and finally informs the UE on the radio resources configuration for the service and which resources are linked to which IP or session flows.

NOTE: Allocation of LTE-RAN functions to logical entities is FFS in RAN WGs.

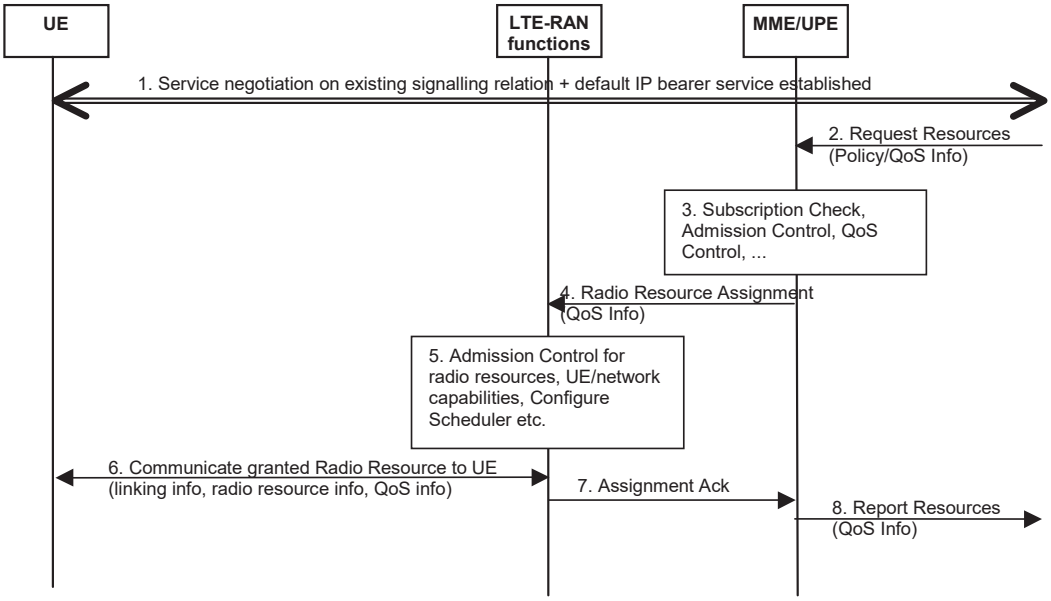

Figure 7.12-3: Information flow for Resource Establishment in the Radio Network

1) The UE has a signalling relation established with the network which performs on the default IP access bearer.

2) The MME/UPE is triggered by a resource request which contains Policy/QoS Information corresponding to the requested service.

3) The MME/UPE checks the UE's subscription, performs admission control according to the received QoS information and available resources and applies the received policy information.

NOTE: The location of the policy enforcement point is FFS, it might be located in the (inter-access-) mobility anchor).

4) MME/UPE initiates the Resource Establishment towards the responsible LTE-RAN functions.

5) The responsible LTE-RAN functions perform admission control. Translation of the received QoS information into radio QoS information is expected to be necessary. The allocation of radio resources and the appropriate configuration of the scheduler are performed according to the translated QoS information.

6) The UE is provided with information about the radio configuration necessary for the service and related information to link radio resources with IP or session flows.

7) The MME/UPE is informed about the successful outcome of the resource establishment.

Resmed Corp. - Ex. 1037
Page 74

8) The MME/UPE reports the outcome of the resource establishment together with the negotiated QoS.

7.12.10 Identified Open Issues

- FFS: UE-initiated bearer establishment procedure needed for SAE/LTE?
- FFS: Tunnel protocol on S1?
- FFS: Differentiated packet discarding of packets of the same bearer?
- FFS: Can SDFs from different PDNs be multiplexed onto the same SAE Bearer?
- FFS: Allow QoS negotiation between eNB and MME/UPE at bearer establishment / modification?
- FFS: For operator-controlled services: SAE/LTE supports **only** Network-Initiated Bearers (establishment + modification)?

7.12.11 Impact on the baseline CN Architecture

Editors Note: It is FFS whether there is any particular impact.

7.12.12 Impact on the baseline RAN Architecture

Editors Note: It is FFS whether there is any particular impact.

7.12.13 Impact on terminals used in the existing architecture

Editors Note: It is FFS whether there is any particular terminal impact.

7.13 Key Issue Network Attachment

7.13.1 Description of Network Attachment

A UE/user needs to register with the network to receive services that require registration. This registration is described as Network Attachment. The always-on IP connectivity for UE/users of the SAE system is enabled by establishing a basic IP bearer during Network Attachment.

The network keeps UE/user registration information. The UE/user registration information, e.g. the mapping between temporary and permanent user identities and the last registered tracking area, is kept by the network for an (implementation) specific time after the UE/user detached before being deleted to allow for Network Attachment with user identity confidentiality.

7.13.2 Solution for Key Issue Network Attachment

The following information flow shows the network attachment of a UE. (The dashed entity is involved optionally.) MME and UPE are shown as combined; though they may be separate (in this case an additional interface must be realized).

The steps shown in the information flow describe individual functional steps. This does not preclude any combining of multiple functional steps into one message or separating one step into a message sequence. The sequence of the steps shown in the information flow may change depending on the solutions for related key issues.

Resmed Corp. - Ex. 1037
Page 75

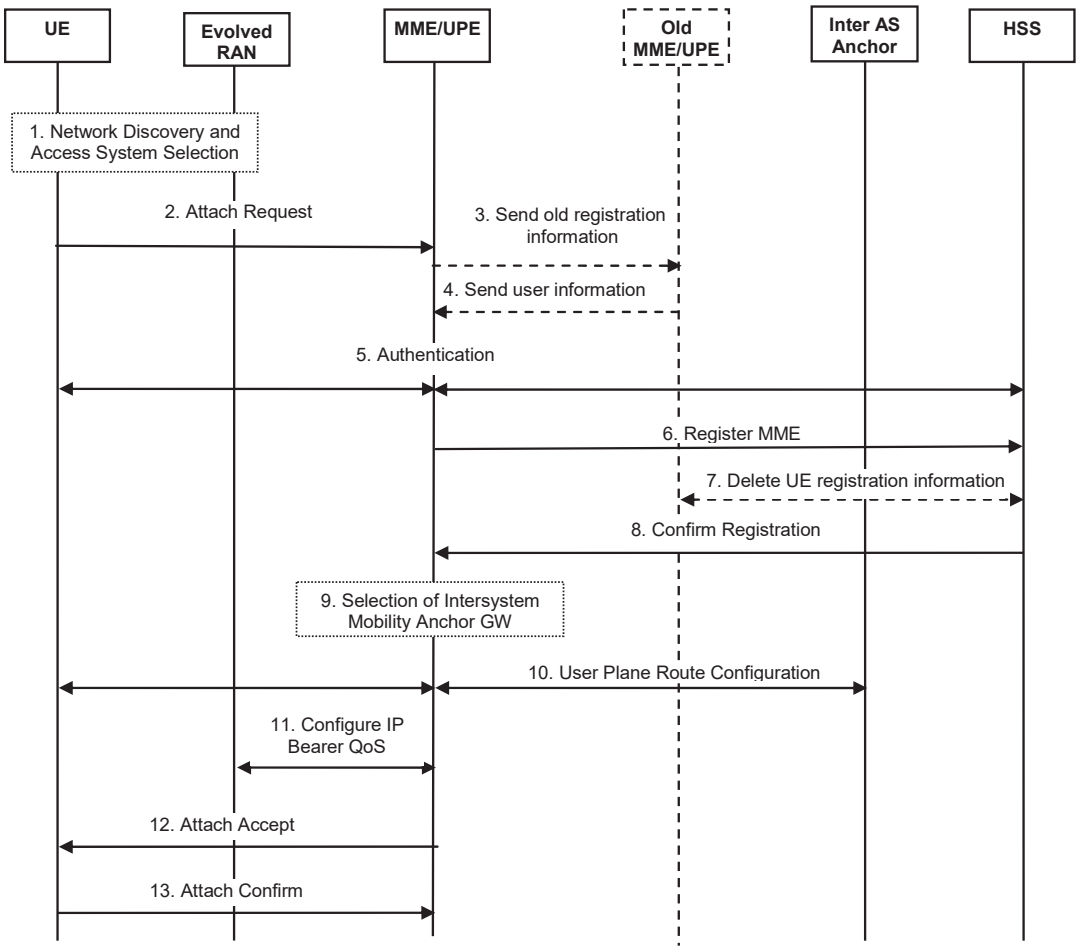

Figure 7.13-1: Network Attachment information flow

1) The UE discovers the SAE/LTE access system(s) and performs access system and network selection. If network sharing is present, a shared network may be selected. Further details of this process are FFS.

2) The UE sends an attach request to the MME/UPE, including its old registration information, e.g. temporary identity. If the UE has no old registration information it includes its permanent identity.

   In case of network sharing is applied the attach request includes information for selecting network or MME/UPE.

   The Evolved RAN selects the MME/UPE.

   The attach request may include information on Default IP Access Bearer (e.g. user preferred IP address and APN).

3) If old registration information was sent by the UE the MME/UPE tries to retrieve user information from the old MME/UPE by sending the old registration information.

4) The old MME/UPE sends user information, e.g. the permanent user identity, to the MME/UPE.

5) The user/UE is authenticated in the new MME/UPE.

6) The MME/UPE registers itself as serving the UE in the HSS.

7) The user/UE information in the old MME/UPE is deleted or the user/UE is marked as not present.

Resmed Corp. - Ex. 1037
Page 76

8) The HSS confirms the registration of the new MME/UPE. Subscription data authorising the Default IP Access Bearer are transferred. Information for policy and charging control of the Default IP Access Bearer is sent to the MME/UPE.

9) An Inters AS Anchor is selected. The selection mechanism is FFS. The IP address configuration is determined by user preferences received from the UE, by subscription data, or by HPLMN or VPLMN policies.

10) The Inter AS Anchor configures the IP layer with the determined user IP address. The user plane is established and the default policy and charging rules are applied. The user plane establishment is initiated by the UE or by the MME/UPE, which is FFS.

11) The MME/UPE provides the Evolved RAN with QoS configurations for the Default IP Access Bearer, e.g. the upper limits for transmission data rates. It is FFS whether this provision of QoS configuration requires an additional trigger, e.g. the need to transfer uplink or downlink user data.

12) The MME/UPE accepts the UE's network attachment and allocates a temporary identity to the UE. Also the determined user IP address is transferred.

13) Roaming restrictions are checked and if violated the network attachment is rejected.

14) The UE acknowledges the success of the network attachment.

It shall be possible for a MME/UPE to trigger the UE to reattach (for reasons like load redistribution, attachment to a topologically more optimal MME/UPE due to current user location etc.). In this case, the following procedure would apply:

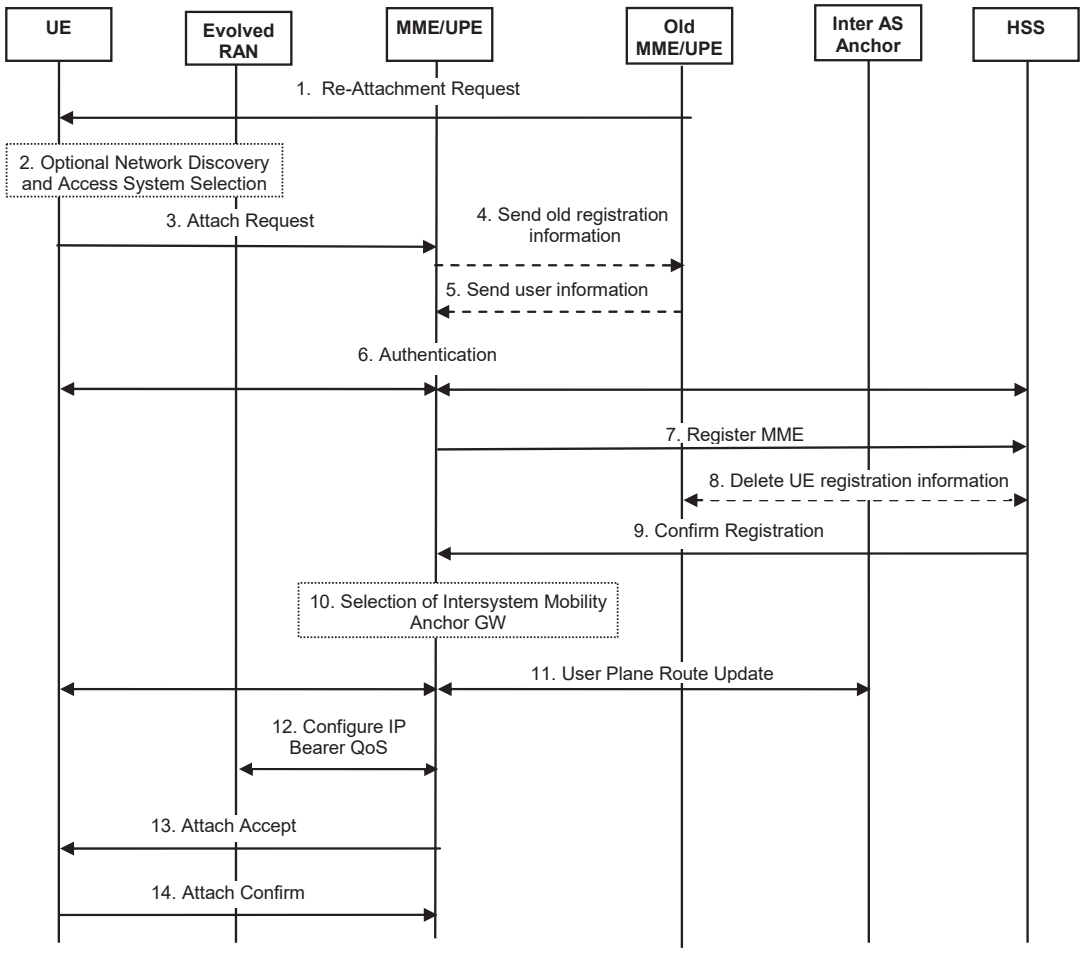

Figure 7.13-2: Network initiated Re-Attachment information flow

Resmed Corp. - Ex. 1037
Page 77

1) The Old MME/UPE requests the UE to re-attach.

2) The UE discovers the SAE/LTE access system(s) and perform access system and network selection. However, this could be skipped in the case of Re-attachment required to move the UE to a topologically more optimal MME/UPE.

3) The UE sends an attach request to the MME/UPE, including its old registration information, e.g. temporary identity. If the UE has no old registration information it includes its permanent identity.

   In case of network sharing is applied the attach request includes information for selecting network or MME/UPE.

   The Evolved RAN selects the MME/UPE.

   The attach request may include information on Default IP Access Bearer (e.g. user preferred IP address and APN).

4) If old registration information was sent by the UE the MME/UPE tries to retrieve user information from the old MME/UPE by sending the old registration information.

5) The old MME/UPE sends user information, e.g. the permanent user identity, to the MME/UPE.

6) The user/UE is authenticated in the new MME/UPE.

7) The MME/UPE registers itself as serving the UE in the HSS.

8) The user/UE information in the old MME/UPE is deleted or the user/UE is marked as not present.

9) The HSS confirms the registration of the new MME/UPE. Subscription data authorising the Default IP Access Bearer are transferred. Information for policy and charging control of the Default IP Access Bearer is sent to the MME/UPE.

10) An Inters AS Anchor is selected. The selection mechanism is FFS.

11) The Inter AS Anchor configures the IP layer with the determined user IP address. The user plane is established and the default policy and charging rules are applied. The user plane establishment is initiated by the UE or by the MME/UPE, which is FFS.

12) The MME/UPE provides the Evolved RAN with QoS configurations for the Default IP Access Bearer, e.g. the upper limits for transmission data rates. It is FFS whether this provision of QoS configuration requires an additional trigger, e.g. the need to transfer uplink or downlink user data.

13) The MME/UPE accepts the UE's network attachment and allocates a temporary identity to the UE. Also the determined user IP address is transferred.

    Roaming restrictions are checked and if violated the network attachment is rejected.

14) The UE acknowledges the success of the network attachment.

NOTE: It is FFS whether the re-attach procedure includes IP address re-allocation and Inter AS Anchor re-selection or whether the UE does not change IP address and Inter AS Anchor during re-attach procedure.

7.13.3 Impact on the baseline CN Architecture

Editors Note: It is FFS whether there is any particular impact.

7.13.4 Impact on the baseline RAN Architecture

Editors Note: It is FFS whether there is any particular impact.

7.13.5 Impact on terminals used in the existing architecture

Editors Note: It is FFS whether there is any particular terminal impact.

Resmed Corp. - Ex. 1037
Page 78

7.14 Key Issue Paging and C-plane establishment

7.14.1 Description of Key Issue Paging and Evolved RAN C-plane establishment

The key issue Paging and C-plane establishment handles both, the mobile terminating and the mobile originating case of C-plane establishment comprising:

- in case of mobile terminating case: termination of incoming data packets for Ues in LTE_IDLE, triggering the paging and distribution of paging over all cells of the Tracking Area the UE is registered.
- for the mobile terminating and the originating case: establishment of a C-plane connection between UE and the network, including the establishment of radio resources for the default (signalling) IP connectivity service and possibly for other preserved services for which context data are already available in the MME/UPE and the UE.

NOTE: There is some relation with "Key Issue Inter 3GPP Access System Mobility in Idle State".

7.14.2 Solution for Key Issue Paging and Evolved RAN C-plane establishment

NOTE: It is agreed that paging is initiated from the UPE (rather than from the eNodeB), provided that the network signalling caused by Ues moving between LTE ACTIVE and LTE IDLE states is very limited. E.g. by ensuring that Ues in LTE ACTIVE state have the same power saving capabilities as those in LTE IDLE state.

A downlink data packet is terminated at the MME/UPE and paging is done within the cells contained in the Tracking Area the respective user is registered.

The UE requests default radio resources to be able to contact the MME/UPE either in response to the paging request in the mobile terminating case or for the mobile originating case. The UPE correlates the incoming data packet with either the default IP connectivity service or other preserved service contexts.

The network provides the UE information to the radio functions of the evolved RAN to perform its services on the radio resources (e.g., necessary information to allow the UE and network to communicate via scheduling control channels).

In the information flow below MME and UPE are shown together for simplicity reasons. This does not preclude a separation, which would however require the definition of an interface between both entities. In a similar manner all radio functions have been grouped into a single functional entity "radio functions".

NOTE: Allocation of radio functions to logical entities is FFS in RAN WGs.

Resmed Corp. - Ex. 1037
Page 79

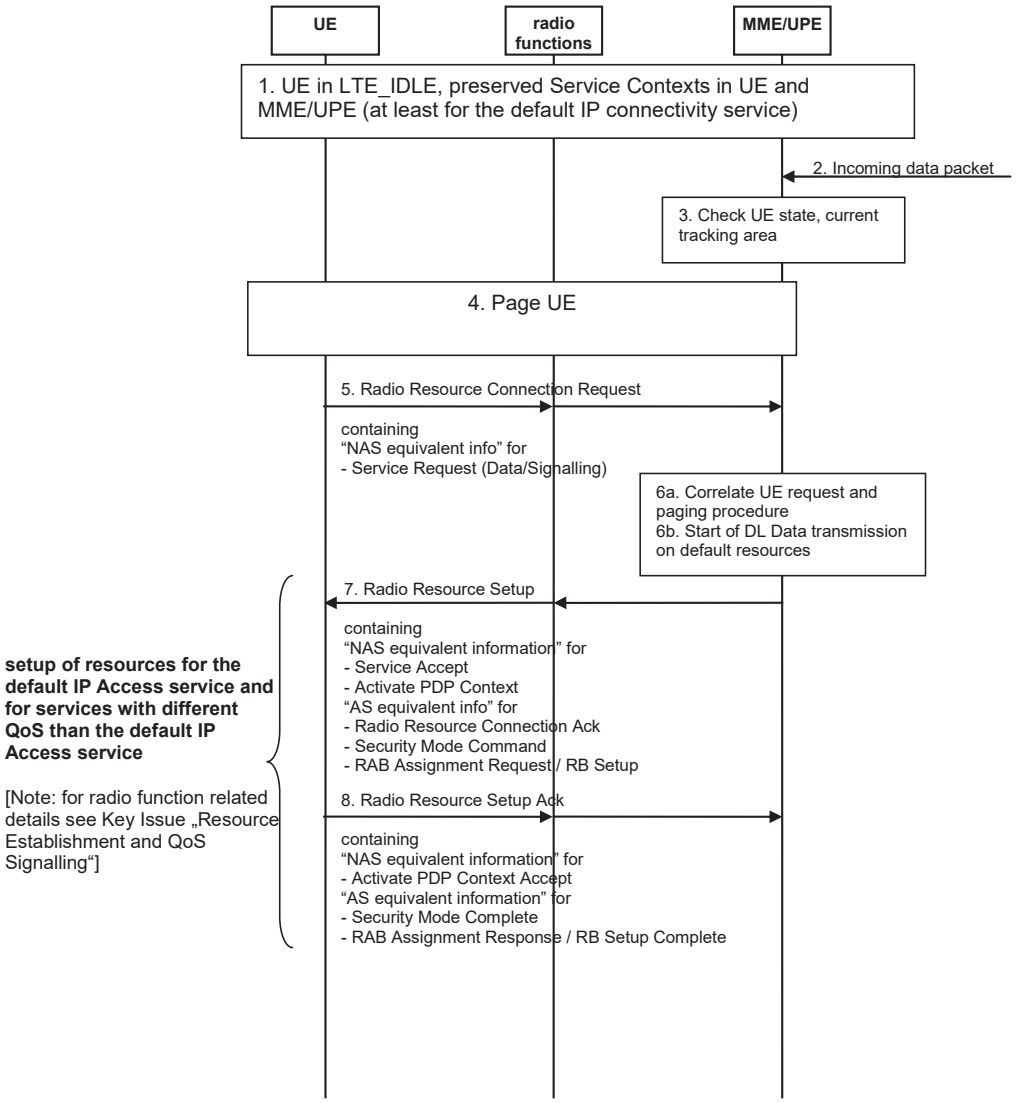

Figure 7.14-1: Information flow for paging and C-plane establishment

1) Both, the UE in LTE_IDLE and the MME/UPE the UE is registered hold at least one preserved service context (i.e. for the default IP connectivity service).

2) The UPE receives a downlink data packet for the UE and discovers that no connection with UE exists radio resources are yet established.

3) The MME/UPE checks the state of the UE and retrieves the Tracking Area it is registered.

4) The MME/UPE triggers paging and requests the responsible radio functions to page the UE in all cells of the Tracking Area the UE is registered.

5) The UE contacts the network using a Radio Resource Connection Request message containing NAS equivalent information for "Service Request". The Radio functions send the Radio Resource Connection Request message to the MME/UPE that is serving the UE.

NOTE 1: It might be possible to start to exchange AS equivalent information for the Security Mode Command function already at this point in time, however, this is FFS.

6a) The MME/UPE correlates the UE request with the Paging procedure.

6b) If the network accepts the Service Request, it is possible to start data transmission on default resources.

Resmed Corp. - Ex. 1037
Page 80

7) If the network decides to grant requested resources, it issues a Radio Resource Setup containing NAS equivalent information for "Service Accept" and possibly (network initiated) "Activate PDP Context request" and AS equivalent information for "Security Mode Command" and possibly RAB Assignment request / RB Setup.

8) The UE acknowledges the Radio Resource Setup. This might include the signalling of NAS equivalent information for "Activate PDP Context Accept". It also includes AS equivalent information for "Security Mode Complete" and possibly "RAB Assignment Response"/"RB Setup Complete".

NOTE 2: Radio function related details for steps 7) and 8) are further detailed in the key issue "Resource Establishment and QoS Signalling" in TR 25.912.

NOTE 3: Whether it is possible to perform steps 5), 7) and 8) in 2 steps is FFS.

7.14.3 Impact on the baseline CN Architecture

Editors Note: It is FFS whether there is any particular impact.

7.14.4 Impact on the baseline RAN Architecture

Editors Note: It is FFS whether there is any particular impact.

7.14.5 Impact on terminals used in the existing architecture

Editors Note: It is FFS whether there is any particular terminal impact.

7.15 Key Issue: Intra LTE-Access-System inter MME/UPE handover in the active mode

7.15.1 Description of Key Issue

This key issue is about whether it is advantageous to perform an inter-MME/UPE handover in case of an intra-LTE handover, and studies different solutions that can solve this problem.

NOTE: This key issue partially overlaps with key issue Intra LTE-Access-System handover. It is intended to merge the two key issues once the key issue Intra LTE-Access-System handover is described in this TR.

NOTE: Depending on the key issue of UP/CP separation, this key issue can be divided into inter-UPE handover and inter-MME handover.

7.15.2 Solution for key issue

7.15.2.1 Alternative 1

7.15.2.1.1 Description

This solution proposes to perform inter-MME/UPE handover in LTE_ACTIVE mode when:

- a UE moves a significant distance from its current MME/UPE, and when
- the active communications are not delay-sensitive.

Whether inter-MME/UPE handoffs for active Ues with delay-sensitive communications are desirable remains FFS.

Proposed Solution:

Inter-MME/UPE handoffs can be achieved through a common 'user plane anchor' as illustrated in Figure 7.15-1.

Resmed Corp. - Ex. 1037
Page 81

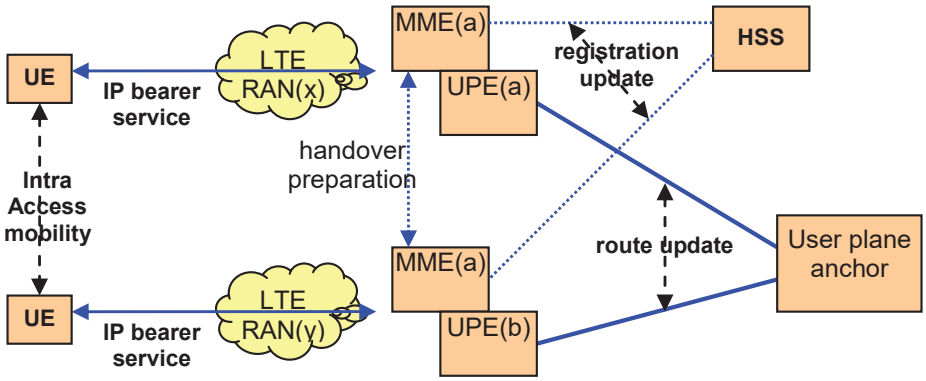

Figure 7.15-1: Intra LTE-Access-System inter-UPE/MME handover

Possible approaches to handle inter-MME/UPE mobility in this solution can be Mobile IP, NETLMM, etc.

This solution proposes different handoff procedures depending on the type of communications active on the UE at the time of crossing a MME/UPE service area.

Procedure for Ues with non-delay sensitive communications (see Figure 7.15.2):

- When the UE crosses a MME/UPE service area boundary, an inter-MME/UPE handover is performed. A new MME/UPE is selected in the new service area in the same way as in LTE_IDLE mode mobility. This type of mobility management is sufficient for terminals without delay sensitive communication requirements. Figure 7.15.2 illustrates how MME/UPE is re-selected for Ues with non delay-sensitive communication.

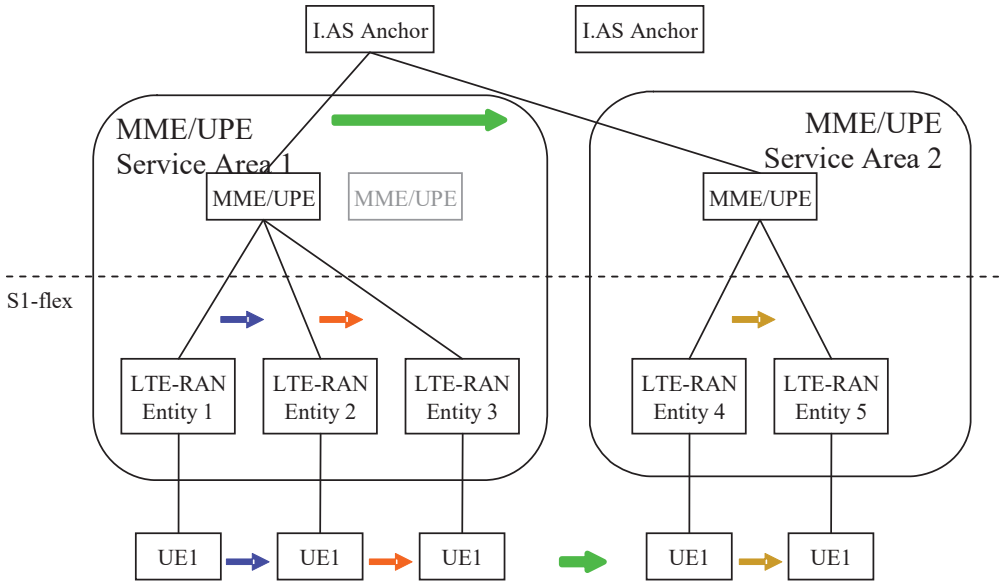

Figure 7.15.2: MME/UPE selection for Active UE with non delay-sensitive traffic

Resmed Corp. - Ex. 1037
Page 82

Procedure for Ues with delay sensitive communications (see Figure 7.15-3):

- When the UE crosses a MME/UPE service area boundary, the original MME/UPE is maintained and the handoff is performed to a LTE-RAN entity in the new service area. This is enabled by the S1-flex concept. Only when the UE goes into LTE_IDLE state, the UE re-registers with a MME/UPE in the new service area. As part of this process, a new MME/UPE is selected in the new service area. This type of mobility management is suitable for delay-sensitive communication (e.g., VoIP), since any perceivable disruption due to MME/UPE re-selection is avoided. Figure 7.15-3 illustrates how MME/UPE is re-selected for Ues with delay-sensitive communication.

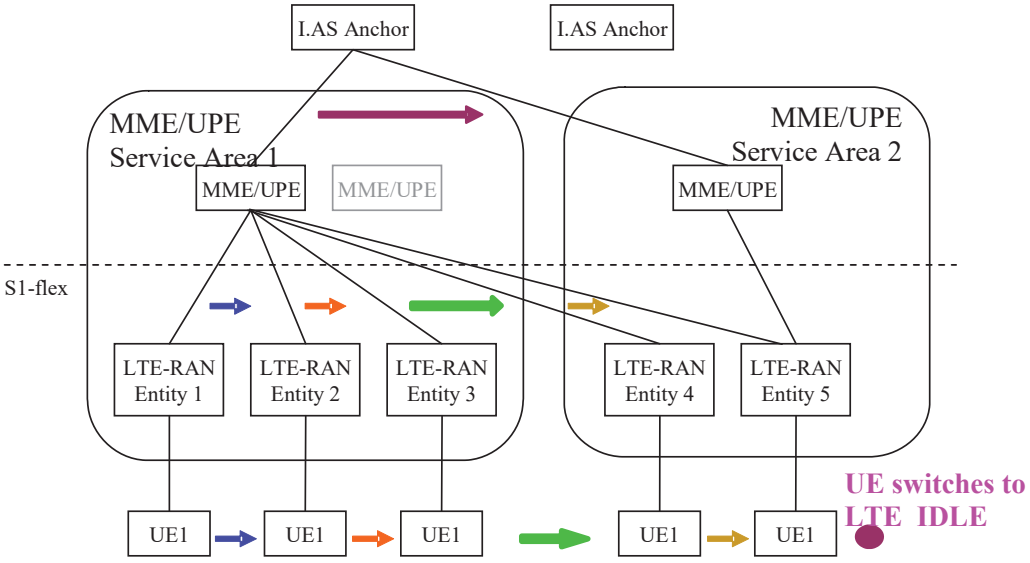

Figure 7.15-3: MME/UPE selection for an Active UE with delay-sensitive traffic

Since this alternative solution does not intend to change the ignallin sequence for intra-LTE-Access-System inter-MME/UPE handover in LTE_ACTIVE mode, detailed signaling sequences are not provided.

NOTE: This approach does not preclude that several MME/UPEs serve the same service area as discussed in the key issue on redundancy and load sharing.

7.15.2.1.2 Impact on the baseline CN Architecture

Editors Note: It is FFS whether there is any particular impact.

7.15.2.1.3 Impact on the baseline RAN Architecture

Editors Note: It is FFS whether there is any particular impact.

7.15.2.1.4 Impact on terminals used in the existing architecture

Editors Note: It is FFS whether there is any particular terminal impact.

Resmed Corp. - Ex. 1037
Page 83

7.15.2.2 Alternative 2

7.15.2.2.1 Description

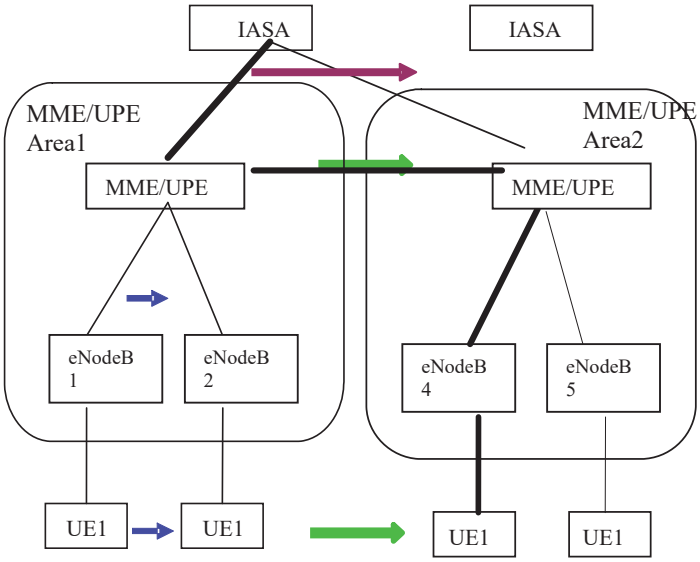

Figure 7.15-4: intra-LTE handover with change of MME/UPE

The procedure is illustrated in the following flow charts:

Resmed Corp. - Ex. 1037
Page 84

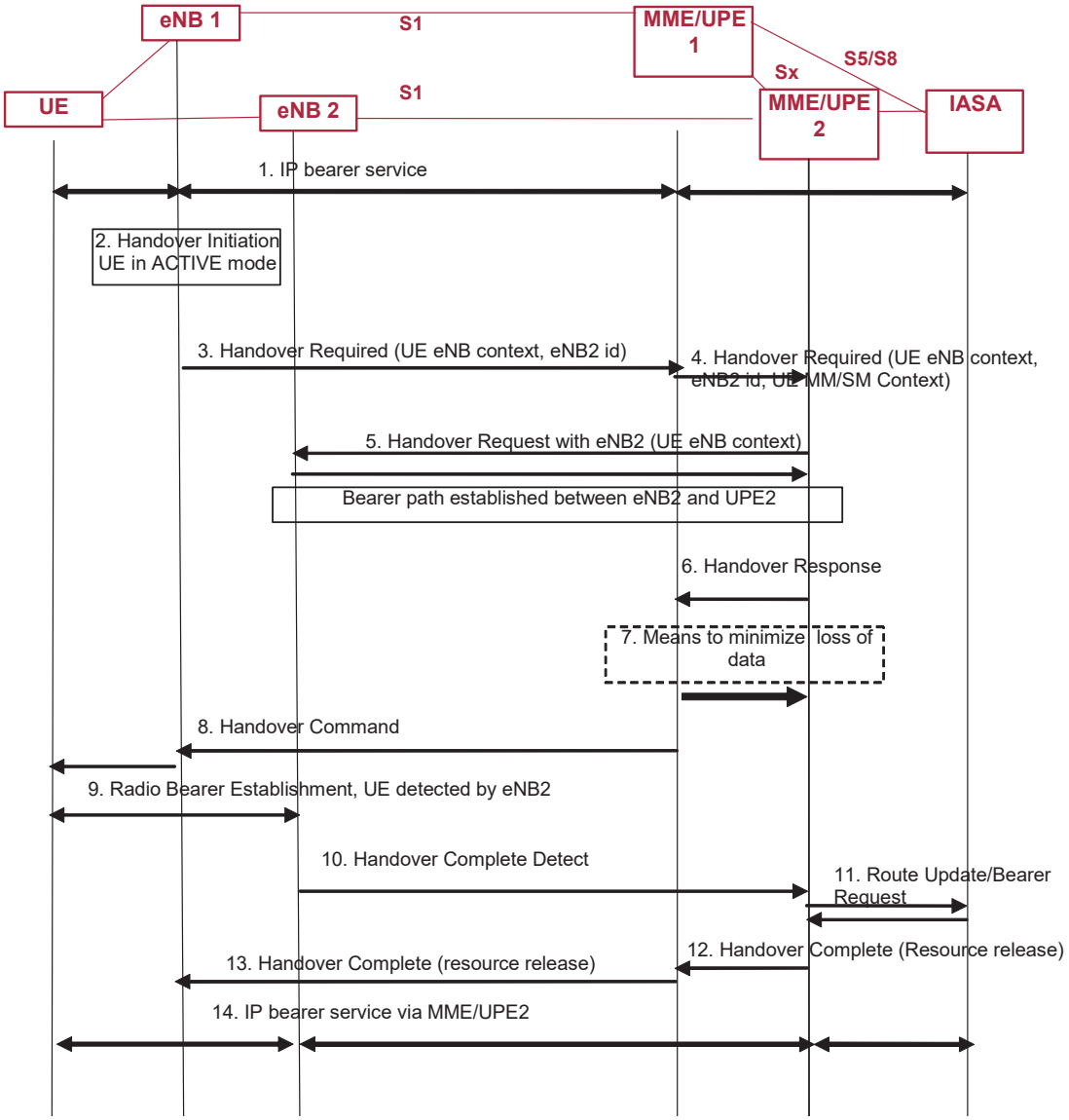

Figure 7.15-5 : intra-LTE MME/UPE Relocation in Active mode

Editor's note: transfer of PCC information is FFS

1) The IP bearer service is established between the UE and the IASA via the MME/UPE1

2) The eNB1 decides to initiates a handover to eNB2

3) The eNB1 sends a Handover Required to the MME/UPE1.

4) The MME/UPE1 selects a MME/UPE2 serving the eNB2 the UE is going to use and sends it a Handover Preparation Request, including the UE context information.

5) The MME/UPE2 creates a UE context and sends a Handover Preparation Request to the eNB2. The eNB2 sends a Handover Preparation Confirm to the MME/UPE2. The bearer plane is established between eNB2 and MME/UPE2

6) The MME/UPE2 sends a Handover Preparation Confirm to the MME/UPE1.

7) Mean to minimize lost of data i.e. MME/UPE1 starts bi-casting to eNB1 and MME/UPE2 or data forwarding to MME/UPE2.

Resmed Corp. - Ex. 1037
Page 85

8) The MME/UPE1 sends a Handover Command to the UE.

9) The UE is detected at the eNB2.

10) eNB2 sends a Handover Complete to the MME/UPE2.

11) The MME/UPE2 does a route update with the IASA.

12) The MME/UPE2 informs MME/UPE1 of the Handover Complete and the possibility to release resources in previous access. MME/UPE1 now sends all downlink packets only to the MME/UPE2.

13) The resource in the source system is released.

14) The IP Bearer service is now established between the UE and the IASA via MME/UPE2.

Note that Step 11 above shows a proposal in case of PMIP/GTP solutions and it would be a route update directly between the UE and IASA in case of MIP use.

7.15.2.x Alternative x

7.16 Key Issue – Network Redundancy and Load Sharing

7.16.1 Description of Key Issue – Network Redundancy and Load-sharing

Redundancy is an important factor contributing to the overall reliability of the network, and load sharing can be used by the operators to improve resource efficiency. Both redundancy and load-sharing may be achieved by two or more entities performing the same functions, where the appropriate entity is chosen as needed. This Key Issue outlines network redundancy and load sharing solutions over various network nodes and interfaces.

7.16.2 General Solutions for key issue – Network Redundancy and Load-sharing

In the following text, client entity denotes an entity that uses the services of a serving entity that employs redundancy or load-sharing mechanisms.

In one potential solution, the client entity attempts to query each serving entity in a fixed sequence until a serving entity responds, i.e. as long as the candidate serving entities fail to or refuse to respond to the query. It is a simple solution but not a flexible one. In order to achieve load sharing, the list of serving entities used by the client entity should be carefully configured. This solution is suitable for redundancy scenario, or roughly load-sharing among a few entities. In case of serving entity failure, it may take some time for the client entity to find an appropriate substitute serving entity.

In another potential solution, the sequence of serving entities used by the client entity is adjustable. The priority of each serving entity in the list can be reconfigured, e.g. based on history information and current conditions. Redundancy can be achieved more intelligently. Load sharing can be achieved if load information can be acquired or deduced. Compared to the first solution, this solution is suitable for more precise load-sharing among a limited set of entities. In case of serving entity failure, the time required to find a substitute serving entity is not reduced compared to the first solution.

In a third potential solution, a 'request and respond' mechanism is used. The client entity sends out a request, and the serving entity that responds faster than the other serving entities are chosen, or the serving entity that responds with the highest service priority is chosen. This solution can be used to attain redundancy and load sharing among many entities, while achieving a more precise load-sharing compared to the first two solutions. The mechanism makes use of more messages in order to reduce the search time and improve the precision of load sharing. Multicast/Broadcast may be used to reduce the number of messages if needed.

Other possible solutions are FFS. For example, the anycast feature of Ipv6 may be considered.

Resmed Corp. - Ex. 1037
Page 86

It is FFS which solution would be used in each different situation.

It is FFS whether redundancy or load-sharing of serving network entities are needed when the client entity is a UE.

7.16.3 S1-flex Concept

7.16.3.1 Description of issue

Support for Network Redundancy and Load Sharing of MME / UPEs in SAE / LTE is achieved by making the S1 interface a multi-to-multi interface, where one node in E-UTRAN can be connected to multiple MME / UPEs for different terminals.

This clause is outlining the solutions for this key issue.

7.16.3.2 Assumptions on S1-flex concept

The following assumptions are taken regarding the S1-flex configuration:

1. There is a multi-to-multi relationship between the E-UTRAN and MME / UPEs in SAE / LTE, meaning one node in eUTRAN can communicate with different MME / UPEs and vice versa.
2. One terminal can only be assigned to one MME at a time.
3. The MME / UPE will be assigned to the terminal during attach to the network, and it is FFS whether the MME / UPE will be unchanged until the terminal leaves the serving area of that MME / UPE.

7.17 Key Issue Network Sharing

7.17.1 Description of Network Sharing

The key issue Network Sharing presents a way to apply functionality corresponding to Rel-6 MOCN Network Sharing also to the LTE / SAE / LTE architecture.

The Rel-6 Network Sharing architecture describes two architectures for network sharing, the Gateway Core Network (GWCN) configuration and the Multi-Operator Core Network (MOCN) configuration. In MOCN configurations only the radio access network is shared, whereas in GWCN configurations also the SGSN and the MSC are shared. Similar solution as MOCN sharing can in SAE / LTE architecture be supported where the MME / UPE belongs to each operator and the e-UTRAN is shared among the operators.

The support of Network Sharing is based on support for multi-to-multi relationship between nodes in E-UTRAN and MME/UPEs (S1-flex).

7.17.2 Solution for Key Issue Network Sharing

7.17.2.1 General

Figure 7.17.2 illustrated the case when 2 operators are sharing the base station sites (Node B) but having their own MME / UPEs.

Resmed Corp. - Ex. 1037
Page 87

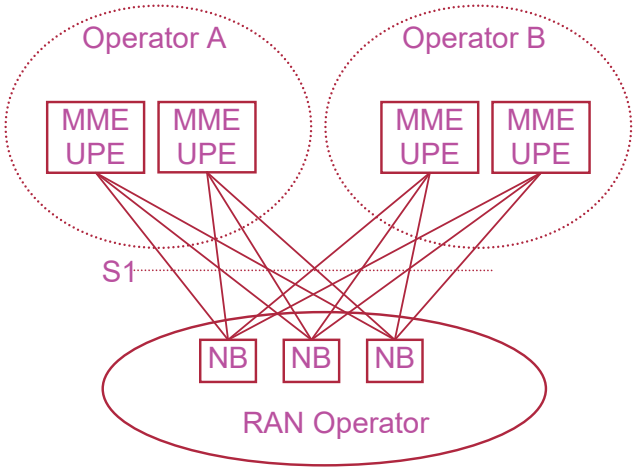

Figure 7.17.2: Network Sharing in SAE/LTE based on S1-flex configuration

NOTE: This figure and this key issue uses NB for simplification reasons but does not make any detailed assumption on the Evolved RAN architecture. Any RAN details are FFS.

7.17.2.2 S1-flex configuration

The SAE/LTE network sharing function uses multi-to-multi connections between nodes of E-UTRAN and MME/UPE's, "S1-flex".

7.17.2.3 Broadcast system information for an SAE/LTE network

Broadcast system information concerning available Operators is included in each cell in the LTE RAN. In an LTE RAN which is shared by multiple Operators the broadcast system information contains multiple PLMN-ids (one PLMN-id for each sharing Operator). An LTE UE decodes this information and takes the information concerning available Operators into account in network and cell (re-)selection procedures.

7.17.2.4 Network selection in an SAE/LTE network

Network sharing is an inherent part of the SAE/LTE architecture, both on the UE and network side. All Ues equipped with the new LTE radio supports network sharing from the beginning, i.e. any network sharing related information is an inherent part of the SAE/LTE protocols and is supported by Ues. (With Rel-6 Netshare terminology, all Ues are "supporting Ues").

An LTE UE decodes the broadcast system information to determine available Operators in the network. All Operators indicated in the broadcast system information, regardless if there are multiple or a single Operator indicated, are treated equally when the PLMN selection procedure is performed.

7.17.2.5 Assignment of Operator and MME/UPE node

When an LTE UE performs an initial access to a network, it informs the E-UTRAN of the identity of the Operator it has chosen. The E-UTRAN routes the initial access to an MME/UPE of the chosen Operator.

After initial access to a shared network the UE does normally not change to another available Operator as long as the selected Operator is available to serve the UE's location.

When the network signals tracking area identities to Ues, e.g. in location updating accept messages, these identities shall contain the chosen Operator identity. The UE stores appropriate information on the SIM, to enable reattach to the same Operator and MME/UPE again after power-off.

A UE shows the name of the Operator corresponding to the PLMN-id it has registered with.

Resmed Corp. - Ex. 1037
Page 88

7.17.2.6 Accounting in RAN

When an LTE RAN is configured for multiple Operators, the RAN should provide an accounting function which can determine the resource usage of respective Operator.

7.17.3 Impact on the baseline CN Architecture

Editors Note: It is FFS whether there is any particular impact.

7.17.4 Impact on the baseline RAN Architecture

Editors Note: It is FFS whether there is any particular impact.

7.17.5 Impact on terminals used in the existing architecture

Editors Note: It is FFS whether there is any particular terminal impact.

7.18 Key Issue Intra-LTE-Access Mobility Support for Ues in LTE_ACTIVE

7.18.1 Description of Key Issue Intra-LTE-Access Mobility Support for Ues in LTE_ACTIVE

The key issue Intra-Access Mobility Handling of Ues in LTE_ACTIVE handles all necessary steps already known from state of the art relocation/handover procedures, like processes that precedes the final HO decision on the source network, preparation of resources on the target network side, pushing the UE to the new radio resources and finally releasing resources on the (old) source network side. It contains mechanisms to transfer context data between evolved nodes, and to update node relations on C- and U-plane.

7.18.2 Solution for key issue Intra-LTE-Access Mobility Support for Ues in LTE_ACTIVE

LTE_ACTIVE state mobility is still controlled by the LTE-RAN functions currently serving the UE (source LTE-RAN functions) which trigger the HO process after it has made a definite decision to serve the user by neighbour ("target") LTE-RAN functions.

Means need to be provided to protect against data loss during the handover process.

After the LTERAN functions on the target side have received the final confirmation from the UE on the completion of the HO process, the release of resources on the (old) source side is triggered.

7.18.2.1 C-plane handling

NOTE: The MME/UPE is shown as being co-located in one functional entity for simplicity reasons; however this is FFS.

Resmed Corp. - Ex. 1037
Page 89

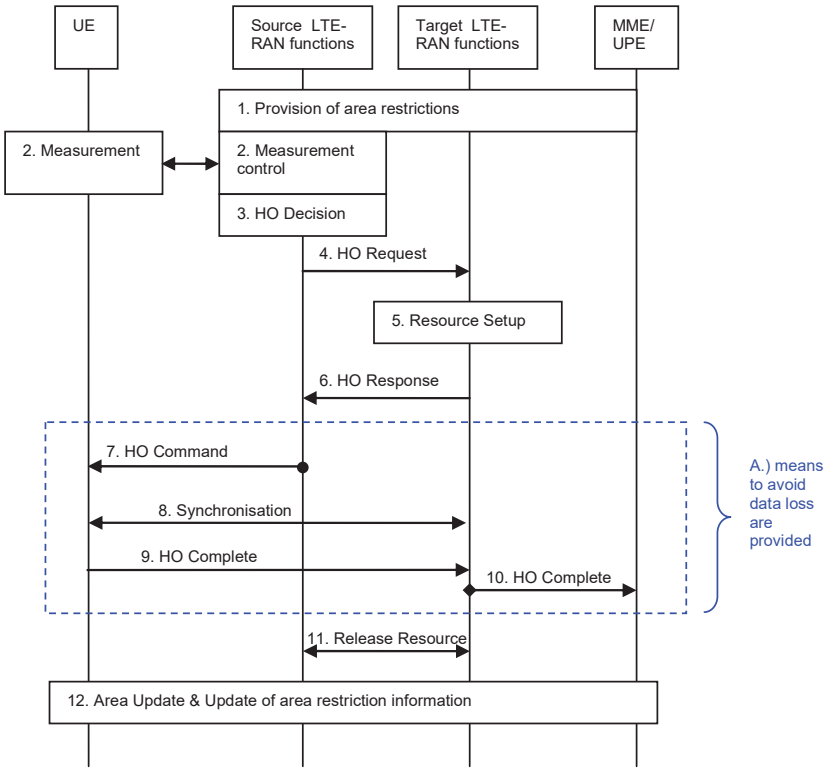

Figure 7.18-1: Information flow for Intra-LTE-Access Mobility Support

1) The UE context within the Source RRC contains information regarding roaming restrictions which where provided either at connection establishment or at the last TA update.

2) The responsible "source LTE-RAN functions" configure the UE measurement procedures according to the area restriction information.

3) Based on measurement results, probably assisted by additional RRM specific information the source side decides to handover the UE to a cell controlled by the "Target LTE RAN functions"

4) The target side is requested to prepare the HO on the target side.

5) Resources at the target side are reserved / prepared.

6) The preparation phase has ended successfully.

A) from step 7) until 10) means to avoid data loss during HO are provided and detailed in TR 25.912 [18]

7) The "Source LTE-RAN" functions command the UE to the target side.

8) The UE starts to gain synchronisation on the target side.

9) Once the UE has successfully accessed the cell, the UE sends an indication to the "target LTE-RAN functions" to indicate that the handover is completed.

10) The HO Complete message is sent to indicate the MME/UPE that the UE is located at the target cell. This indication should be used to perform the user plane switch.

11) The release of resources on the source side is triggered directly by the target side.

NOTE: t is ffs whether the release of the resources on the source side is done with MME/UPE involvement or by the "target LTE-RAN functions" directly.

12) If the new cell is member of a new Tracking Area, the UE needs to register with the MME/UPE which in turn updates the area restriction information on the target side.

Resmed Corp. - Ex. 1037
Page 90

7.18.2.2 User plane handling

Editor's note: This is for further study, but see document R3-060401 for the current status.

7.18.3 Impact on the baseline CN Architecture

Editors Note: It is FFS whether there is any particular impact

7.18.4 Impact on the baseline RAN Architecture

Editors Note: It is FFS whether there is any particular impact

7.18.5 Impact on terminals used in the existing architecture

Editors Note: It is FFS whether there is any particular terminal impact.

7.19 Key Issue – Service continuity between IMS over SAE/LTE access and CS domain

The intent of this clause is to study solutions for service continuity between IMS over SAE/LTE access and CS domain. The initial focus is put on voice call continuity, however the study on continuity of other services (e.g. video) shall not be precluded.

7.19.1 Voice call continuity between IMS over SAE/LTE access and CS domain

7.19.1.1 Description of key issue Voice call continuity between IMS over SAE/LTE access and CS domain

The intent of this clause is to study alternative solutions for Voice call continuity between IMS over SAE/LTE access and CS domain. The solutions studied here shall allow coexistence with VCC (as specified in 3GPP TS 23.206 [29]). Solutions compatible with VCC Rel 7 shall be studied.

It is expected that some of the alternative solutions may be applied in pre-SAE/LTE context i.e. for Voice call continuity between IMS over 2G/3G PS access and CS domain. Any such applicability to pre-SAE/LTE context should be highlighted when incorporated in here.

In the following desirable characteristics for proposed solutions are listed:

- The solution shall not require UE and/or RAT capability to simultaneously signal on two different RATs.
- Impact on service quality, e.g. QoS, interruption times should be minimized
- RAT/domain selection/change should be under network control.
- In roaming cases, the Visited PLMN should control the RAT/domain selection/change while taking into account any related HPLMN policies
- Inter-domain handover in the VPLMN should be performed without significant amount of signalling to the HPLMN.
- Impact on legacy RAT is highly undesirable
- Impact on legacy CS CN is undesirable

Resmed Corp. - Ex. 1037
Page 91

7.19.1.2 General aspects

It is understood that the service continuity aspects described in this clause are linked to radio aspects peculiar to single radio devices e.g. handovers across 3GPP radio technologies.

Different solutions may be suited depending on the scenarios (e.g. which combination of domain transfer and radio handover), on the deployment assumptions (e.g. PS Handover and VoIP optimisations supported in the 2G domain or not) and on the intended use cases (e.g. LTE used as an overlay in areas where both 2G and 3G are present, or as a replacement for either of them)

The following table summarises the number of scenarios potentially to be considered for the continuity between IMS and CS

Scenario	Source or Target cell (PS)	Target or Source cell (CS)	Assumptions on deployment	Solutions
1	LTE	3G	3G: VoIP optimisations supported	
2	LTE	3G	3G: VoIP optimisations not supported	
3	LTE	2G	2G: VoIP optimisations supported; PS Handover supported	
4	LTE	2G	2G: VoIP optimisations not supported; PS Handover supported	
5	LTE	2G	2G: VoIP optimisations not supported; PS Handover not supported	
6	3G	3G		
7	3G	2G	2G: VoIP optimisations supported; PS Handover supported	
8	3G	2G	2G: VoIP optimisations not supported; PS Handover supported	
9	3G	2G	2G: VoIP optimisations not supported; PS Handover not supported	
10	2G	2G		
NOTE: Scenarios 6,7,8,9 assume VoIP optimisations are supported in 3G NOTE: Scenarios 10 assumes VoIP optimisations are supported in 2G				

Table 7.19.1,2-1 – Continuity scenarios from IMS towards CS

Editor's Note: The "Solutions" column is FFS

7.19.1.3 Alternative solution A – Combinational VCC

7.19.1.3.1 Description

Combinational VCC (C-VCC) is a combination of radio handover (HO) and VCC domain transfer (DT; as defined in 3GPP TS 23.206 [29]).

Resmed Corp. - Ex. 1037
Page 92

The continuity between IMS/LTE and 3G CS is enabled by going through 3G PS as an intermediate step i.e.

- **LTE** =(PS HO)=> *via **3G PS*** =(DT)=> **3G CS**, and
- **3G CS** =(DT)=> *via **3G PS*** =(PS HO)=> **LTE**.

A pre-requisite for C-VCC operation in this scenario is that the 3G cell supports both CS voice bearers and PS voice bearers.

The continuity between IMS/LTE and 2G CS is enabled by going through 2G PS as an intermediate step i.e.

- **LTE** =(PS HO)=> *via **2G PS*** =(DT)=> **2G CS**, and
- **2G CS** =(DT)=> *via **2G PS*** =(PS HO)=> **LTE**.

A pre-requisite for C-VCC operation in this scenario is that the 2G cell supports both CS voice bearers and PS voice bearers. In addition, the terminal and the 2G RAN must support the PS handover procedure and the DTM capability. The GPRS access of the 2G cell is used like a "changing room" where the voice call/session can quickly change its nature (from CS to IMS or vice versa), but without keeping the VoIP session in GPRS longer than necessary to perform this transformation.

The solution is applicable in pre-SAE/LTE context, including transitions to/from 3G PS-only cells. It requires support for PS Handover and DTM on the 2G side.

7.19.1.3.2 Impact on the baseline CN Architecture

7.19.1.3.3 Impact on the baseline RAN Architecture

7.19.1.3.4 Impact on terminals used in the existing architecture

7.19.1.4 Alternative solution B

7.19.1.4.1 Description

This solution enables the continuity between IMS/LTE and 3G CS by going through 3G PS as an intermediate step (i.e. the same as in clause 7.19.1.3). There is no provision for support of continuity between IMS/LTE and 2G CS directly without going through 3G as an intermediate step. This would be achieved as follows:

- **LTE** =(PS HO)=> *via **3G PS*** =(DT)=> *via **3G CS*** =(CS HO)=> **2G CS**, and
- **2G CS** =(CS HO)=> *via **3G CS*** =(DT)=> *via **3G PS*** =(PS HO)=> **LTE**.

Such a simplification is based on the assumption that LTE will be deployed in islands of high user density first and 3G coverage in these areas is well developed and in any case 3G with VoIP capability exists as a backup for LTE. It is assumed that wherever there is 3G coverage, GSM coverage is also available.

The following picture illustrates graphically the concept.

Resmed Corp. - Ex. 1037
Page 93

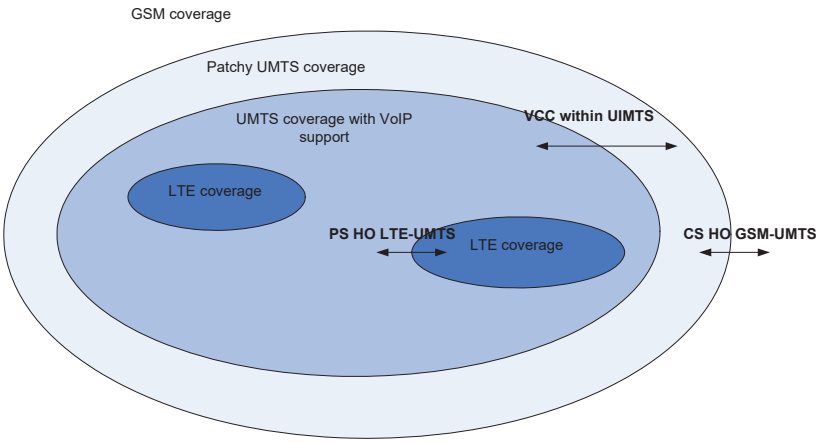

Figure 7.19.1.4.1-1 – Underlying assumptions for Alternative solution B

In regions of the network where 3G VoIP coverage can be patchy and backed up by GSM, then the network must force the voice call to be supported using 3G CS. Methods to command the UE to perform VCC domain transfer could be various. For instance, the 3G NodeBs in areas of patchy 3G coverage may be configured to transmit on the broadcast channel information that triggers the UE to move voice calls from 3G PS to 3G CS. Also, in areas of non-patchy 3G coverage, the 3G network could transmit information on the broadcast channel that permits the UE to stay on 3G PS for voice calls support.

When a user starts a call on 2G CS or 3G CS, or the call is handled by CS domain at some point, the transition to 3G VoIP and then LTE should be driven by policy. The UE could decide the transition to 3G PS when the network provides positive information that VoIP is supported on 3G PS. The transition to LTE would then be governed by network controlled HO policies between 3G PS and LTE.

The solution is applicable in pre-SAE/LTE context provided that the 3G cells in the border areas support access to both CS and PS domain.

7.19.1.4.2 Impact on the baseline CN Architecture

7.19.1.4.3 Impact on the baseline RAN Architecture

7.19.1.4.4 Impact on terminals used in the existing architecture

7.19.1.5 Alternative solution C – CreDT

7.19.1.5.1 Description

Call Re-establishment on Domain Transfer (CreDT) is a "break-before-make" solution in which the remote party is "parked" while the UE is in the source radio, and is then "un-parked" once the UE moves to the target radio. The VCC application on the network side anchors the bearer path of the remote party during the execution of CreDT. The user is notified via appropriate MMI of the ongoing CreDT procedure, whereas comfort tone or recorded announcement is provided to the remote party during CreDT.

Resmed Corp. - Ex. 1037
Page 94

The CreDT procedure initiation can be signalled explicitly by the UE (refer to Annex E in 3GPP TR 23.806 [30] for detailed call flows) or implicitly deduced by the VCC application upon radio link failure (the latter is referred to here as "Implicit CreDT").

The solution is applicable in pre-SAE/LTE context, including transitions to/from 3G PS-only cells. It does not require support of PS Handover or DTM on the 2G side.

7.19.1.5.2 Impact on the baseline CN Architecture

7.19.1.5.3 Impact on the baseline RAN Architecture

7.19.1.5.4 Impact on terminals used in the existing architecture

7.19.1.6 Alternative solution D - « Inter-MSC Handover » solution

7.19.1.6.1 Description

This alternative solution is based on the inter-MSC Handover procedure. The SAE/LTE Evolved Packet Core (EPC) emulates an "anchor MSC" functionality and exhibits the “E” interface towards the neighbouring MSCs. The solution works for voice calls which have been initiated in IMS/LTE and allows for subsequent transitions from 2G CS domain back to IMS/LTE.

While in IMS/LTE mode, the CSCFs detect the potential candidate sessions for VCC transition to the CS domain and propagate this information via the PCRF and the EPC to the evolved RAN. This information allows the evolved RAN to identify the Ues for which to initiate measurements that may eventually trigger the inter-MSC HO procedure. At the end of the inter-MSC procedure, the P-CSCF may have to register with the IMS on UE's behalf in case the UE has no DTM capability. It is FFS how call control signalling is handled after handover (e.g. relay of call control signalling in BSSMAP messages).

Similar logic may be used for subsequent transitions from 2G CS to IMS/LTE, but it requires further investigation.

The services remain anchored in the IMS after the initial and subsequent transitions to/from the CS domain.

This solution may also be applicable for continuity between 3G PS and 2G CS, but it requires further investigation.

7.19.1.6.2 Impact on the baseline CN Architecture

7.19.1.6.3 Impact on the baseline RAN Architecture

7.19.1.6.4 Impact on terminals used in the existing architecture

7.20 Key Issue – SAE Identities

7.20.1 Description of issue

The UE and the network entities in an SAE network need different identities for addressing, mobility, connectivity, confidentiality and other reasons.

In GSM and UMTS networks the identities are to a large extent the same. Using the same identities specifically also for LTE accesses would be beneficial from e.g. a UE mobility and identification point of view. In addition new identities are needed for new network entities.

Resmed Corp. - Ex. 1037
Page 95

7.20.2 Agreements on SAE Identities

The following table defines the identities that the UE and the network need in a SAE network.

Note: Identities identifying connections or tunnel end-points have not been addressed except for some specific cases which may have impact on the network architecture.

Note: Additional Non-3GPP identities are FFS

Note: The exact mapping between node identities and Transport Network Layer (TNL) addresses (e.g. IP addresses) is FFS.

UE and Network Identities					
Name	**Allocated by which SAE/LTE entity**	**Purpose**	**Scope**	**Used by**	**Comment**
IMSI	N/A	Permanent Identity of the Subscriber	Globally unique	UE, Evolved Packet Core and NAS layer (and possibly RRC during initial attach and to determine paging occasion).	For security reasons the IMSI should not be used/stored in the LTE RAN (rare exceptions might be possible)
IMEI	N/A	Permanent Identity of the end user equipment	Globally unique	UE, Evolved Packet Core and NAS layer.	For security reasons the IMEI should not be used/stored in the LTE RAN (rare exceptions might be possible)
S-TMSI	MME	Temporary user identity	Unique within a tracking area or within MME pool area(s)	UE, Evolved Packet Core, NAS layer	The S-TMSI is similar to P-TMSI used today in GSM/UMTS. It needs not to share TMSI space with CS domain as in GSM/UMTS. Either part of the S-TMSI is used to identify the MME within a pool of MMEs or a separate MME-ID (similar to the 3G NRI) is used (FFS). Solutions are needed to support network sharing. Uniqueness of S-TMSI within areas depends on tracking area concept, which is FFS. Format influences re-use of resolution of temporary addresses be 2G/3G SGSNs. The need to store S-TMSI on legacy UICC is FFS.
MS-ISDN	N/A	Permanent subscriber Identity primarily used by CS and SMS services and by	Globally unique	UE, Evolved Packet Core, HSS, O+M	Used to identify a subscriber within a charging record. Its usage is FFS; another identifier might be used in SAE. Usage of MS-ISDN for VCC in Evolved

Resmed Corp. - Ex. 1037
Page 96

		O+M systems.			Packet Core is FFS.
IP address	IASA	Permanent or temporary Identifier used to identify the UE/user within the PDN	Unique within PDN	UE, Evolved Packet Core, PDN, operator services/IMS	The UE needs a routeable address when connected to a PDN. The IP address may be a IPv4 or a IPv6 address, and may be a private or public IP address. There are also other IP address allocation options, e.g. by auto-configuration.
Tracking Area Identity	N/A	Permanent Identity used to identify tracking areas.	Unique within a PLMN	Evolved Packet Core, UE. The tracking area identity is also broadcasted transparently in the LTE RAN.	May share some similarities with the existing Routing Area Identity. Solutions are needed to support network sharing. Format influences re-use of resolution of temporary addresses be 2G/3G SGSNs. The need to store TAI on legacy UICC is FFS
MME Identity	N/A	Permanent Identity used to identify MME	Unique within a PLMN	Evolved Packet Core, LTE RAN, UE (indirectly via S-TMSI and Tracking Area Identity (FFS))	FFS whether a separate MME Identity is needed. As today, the old Tracking Area Identity + (parts of) the S-TMSI can identify the MME (FFS). In the LTE RAN the eNode B can (as in the RNC today) use (part of) the S-TMSI identify the MME (FFS) An MME is associated with one or more TNL, e.g. IP, addresses.
Cell Identity	N/A	Permanent Identity used to identify the Cell	FFS: Unique within a PLMN	Evolved Packet Core, LTE RAN	Needed to be known in the CN for some UEs in active mode when location-based charging is used. [For paging, the MME needs to know which S1 interfaces to send the page message to. Hence the MME probably needs to be able to map Tracking Area to Cell IDs/eNodeB IDs. Note that the cells within an eNodeB may need to be in different tracking areas.] It is FFS if the Cell Identity is associated with a TNL address. FFS whether Cell Identity has to be unique within LTE RAN or globally unique or whether both are needed.
eNode B Identity	N/A	Permanent Identity used to identify the eNode B	Unique within a PLMN	Evolved Packet Core, LTE RAN	FFS whether a specific eNodeB identity is needed or whether (TNL) addresses are sufficient. Used to derive (TNL) addresses

Resmed Corp. - Ex. 1037
Page 97

					for S1 addressing. The eNode B Identity is associated with one or more TNL, e.g. IP, addresses.
eNode B Specific S1 UE Context Identity	eNode B	Temporary identity used to identify an S1 UE context within eNodeB.	FFS: Unique within a eNode B [and x2 interface handover target eNodeBs ?]	Evolved Packet Core, LTE RAN	It is used to identify the MME and/or UPE UE context(s) in the eNode B that relate to signaling relations(s) over S1. Whether MME, UPE or both UE context identities are needed depends on function separation between MME and UPE. NAS signaling, for example, might be exchanged over S1 by using UE/user identity without a need for an additional UE Context Identity. The S1 addressing principle is still FFS. Uniqueness within a (TNL) eNodeB address might be sufficient.
MME Specific S1 UE Context Identity	MME	Temporary identity used to identify an S1 UE context within MME.	FFS: Unique within a MME	Evolved Packet Core, LTE RAN	It is used for signaling over S1 to identify the UE context in the MME. Its need is FFS. The S1 addressing principle is still FFS. Uniqueness within a (TNL) MME address might be sufficient.
UPE Specific S1 UE Context Identity	UPE	Temporary identity used to identify an S1 UE context within UPE.	FFS: Unique within a UPE	Evolved Packet Core, LTE RAN	It is used for signaling over S1 to identify the UE context in the UPE. Its need is FFS. The S1 addressing principle is still FFS. Uniqueness within a (TNL) UPE address might be sufficient.
UPE identity	N/A	Permanent Identity used to identify the UPE from the LTE RAN	Unique within a PLMN	Evolved Packet Core, LTE RAN	FFS if needed or if the UPE TNL address, e.g. IP address, is enough.
PDN Identity	N/A	Permanent Identity used to identify one or multiple specific PDN(s)	Globally unique	UE, Evolved Packet Core	Depending on Multiple PDNs solution. It may be an APN.
PCRF Id	N/A	Permanent Identity used to identify the PCRF	Unique within a PLMN	Evolved Packet Core	FFS if needed or if the PCRF TNL address is enough.
HSS Id	N/A	Permanent Identity used to identify the	Unique within a	Evolved Packet Core	FFS if needed or if the HSS is identified by (part of) user

Resmed Corp. - Ex. 1037
Page 98

		HSS	PLMN		Identities.
RAT ID	N/A	Radio Access Technology Identity used to identify the type of radio access technology	Globally unique	Evolved Packet Core	FFS if needed or is used by the PCC of SAE.

8 Consolidated architecture

9 Conclusions

Editors Note: Both interim and final conclusions can be documented.

Resmed Corp. - Ex. 1037
Page 99

Annex A: Open Issues

- How to achieve mobility within the Evolved Access System?
- Is the evolved access system envisioned to work on new and/or existing frequency band?
- Is connecting the Evolved RAN to the pre-SAE/LTE PS core needed?
- How to add support for non-3GPP access systems?
- WLAN 3GPP IP access system might need some new functionality for Inter-system Mobility with the Evolved Access System
- Clarify which interfaces are the roaming interfaces, and how roaming works in general
- Inter-access-system mobility
- Possible difference between PCC functionality, mainly stemming from the difference in how Inter-AS mobility is provided
- How do Ues discover Access Systems and corresponding radio cells ? Autonomous per Access System and the Ues scans/monitors any supported Access System to discover Systems and cells. Or, do Access Systems advertise other Access Systems to support Ues in discovering alternative Access Systems ? How is such advertising performed (e.g. system broadcast, requested by UE, …) ? How do these procedures impact battery lifetime ?
- In case Access Systems advertise other Access Systems: will any Access System provide seamless coverage (avoiding loss of network/network search), or is a hierarchy of Access Systems needed to provide seamless coverage for continuous advertisement ?
- Is user access control/authentication per access system or more centralized for multiple access systems ?
- How are Access Systems, PLMNs and operators discovered and selected ? Can a UE access/attach multiple PLMN/operator in parallel ? If yes, how many ? Or, has a UE to select the same PLMN/operator for each Access System in case the UE accesses/attaches multiple Access systems in parallel?
- How many identities and temporary identities has a UE/subscriber? For every Access System another identity? In case of multiple identities: is user context transfer and identity translation required at a change of the Access System to avoid re-authentication?
- In case a UE accesses/attaches multiple Access Systems in parallel: how does reservation of guaranteed resources work? Are multiple reservations in parallel required (same resource on every Access System) to allow for fast change between Access Systems ? Or, does a mobility/handover mechanism reserve resources during the mobility/handover process ?
- Shall inter Access System mechanisms and signaling for load sharing and mobility be generic for all Access Systems or peer-to-peer between Access Systems ?
- Will any Access Systems have an idle or paging mode ? And, shall the wake-up work over multiple Access Systems (e.g. paging in multiple Access Systems in parallel) ?
- Are User or UE access and service rights specific per Access Systems or common for all or multiple Access Systems ?
- How many network nodes are between UE and top level mobility anchor ? And is there only one set traffic plane functions for user data (policing and charging) ? Or, may the traffic plane functions change during an ongoing service because of an Access System change?
- Are there layers of multiple Access Systems in same physical location required ? And how dynamic do Ues change between different Access Systems in the same location in idle and in connected mode? What signaling traffic is acceptable during such mobility (e.g. signaling via HPLMN) and how does it influence system performance and QoS (e.g. packet loss / service interruption during change of Access System)?

Resmed Corp. - Ex. 1037
Page 100

- May functions be transferred to application/services level (e.g. mobility supported by IMS services) ? If yes, to which extent is this feasible for application/services ?
- Does every Access System provide its own security mechanisms (encryption, integrity) ? Is a parameter mapping between different security mechanisms possible? Or, can security associations be established in parallel to ongoing services ?
- How is data compression provided for the different access systems ? And how re-synchronizes compression when the access system changes ?

Resmed Corp. - Ex. 1037
Page 101

Annex B: Summary of different high level architecture proposals

Editor's note: Now that a common high level architecture proposal has been added to clause 4.2, further contributions to this annex are NOT expected.

B.0 General

Current company inputs have been summarized into the following 2 separate high level architecture figures. These figures represent the spectrum of company inputs. The key differences between the two figures are:

a) Inter-access-system mobility is achieved differently;

b) Possible difference between PCC functionality, mainly stemming from the difference in how Inter-AS mobility is provided.

Key issues for further consideration and contributions have been added to the list of open issues in Annex A.

B.1 Concept B1

NOTE: For simplicity and readability, in figures B1.b to B1.e, many of the details of WLAN roaming such as AAA infrastructure for WLAN are omitted and some details may be FFS.

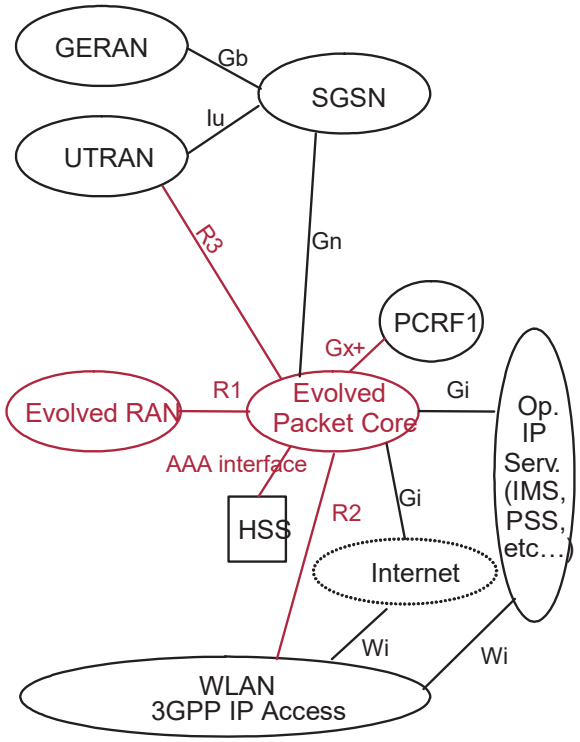

- R1, R2, R3 are working names for reference points
- Gx+ denotes evolved/extended Gx
- PCRF1 denotes evolved Policy and Charging Rules Function

* Colour coding: Red indicates new functional element / interface

Figure-B.1a: Non-roaming case

Resmed Corp. - Ex. 1037
Page 102

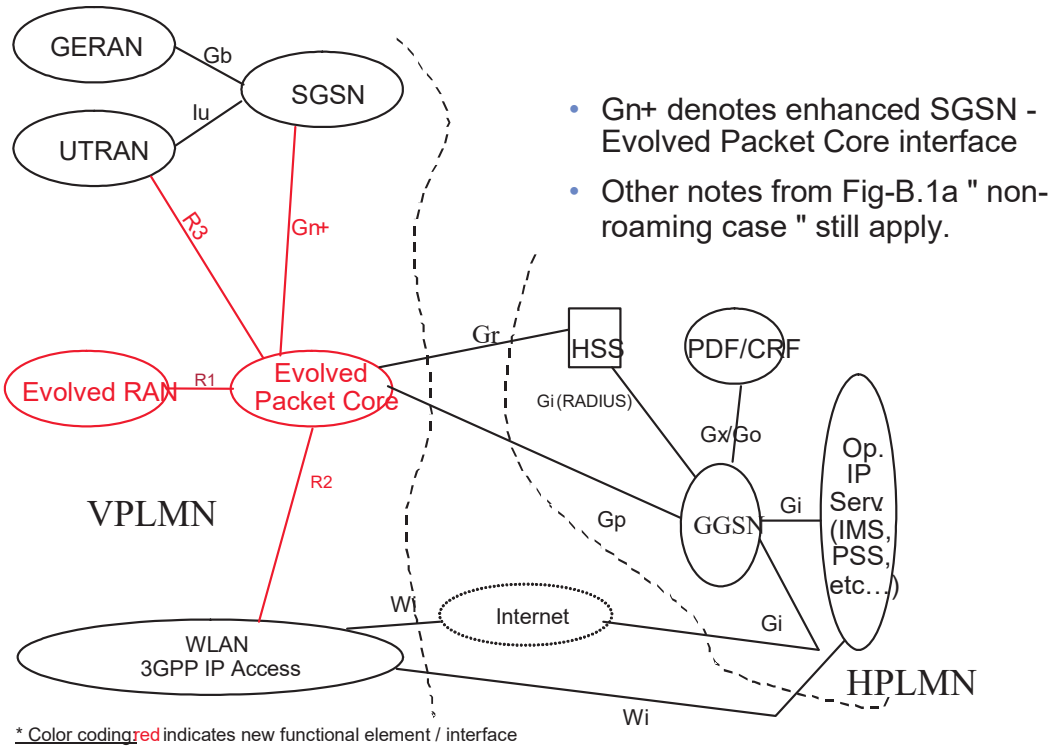

Figure-B.1b: Roaming case: Evolved VPLMN, legacy HPLMN

Resmed Corp. - Ex. 1037
Page 103

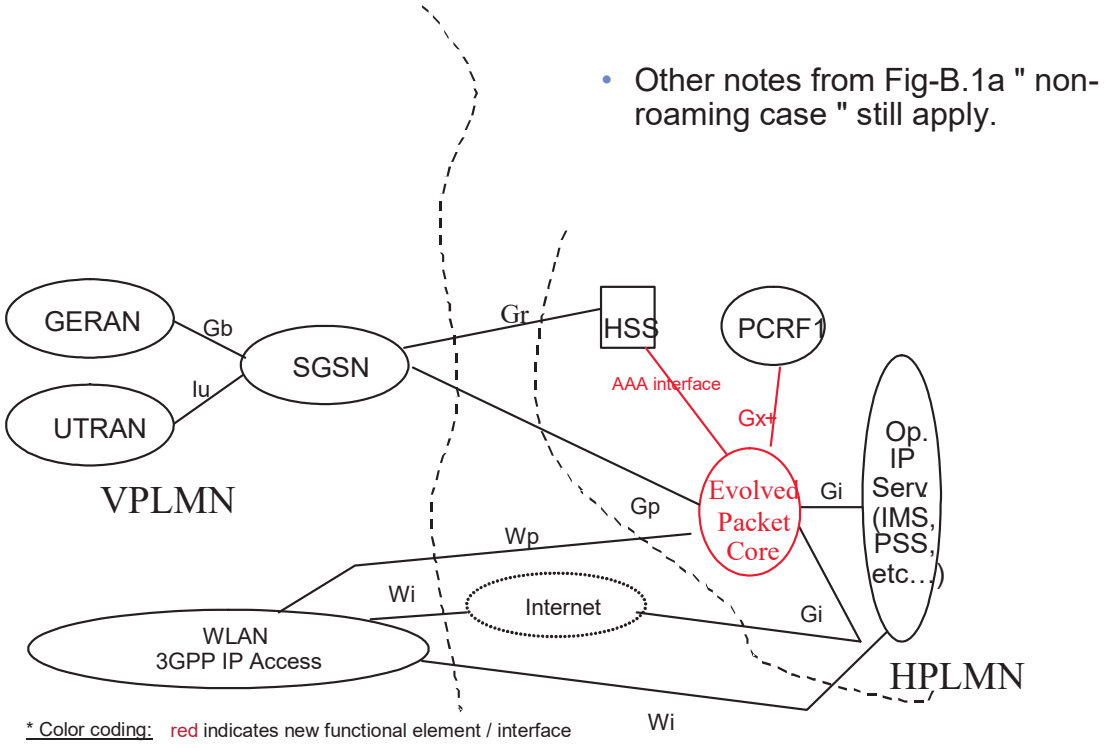

Figure-B.1c: Roaming case: Legacy VPLMN, evolved HPLMN

Resmed Corp. - Ex. 1037
Page 104

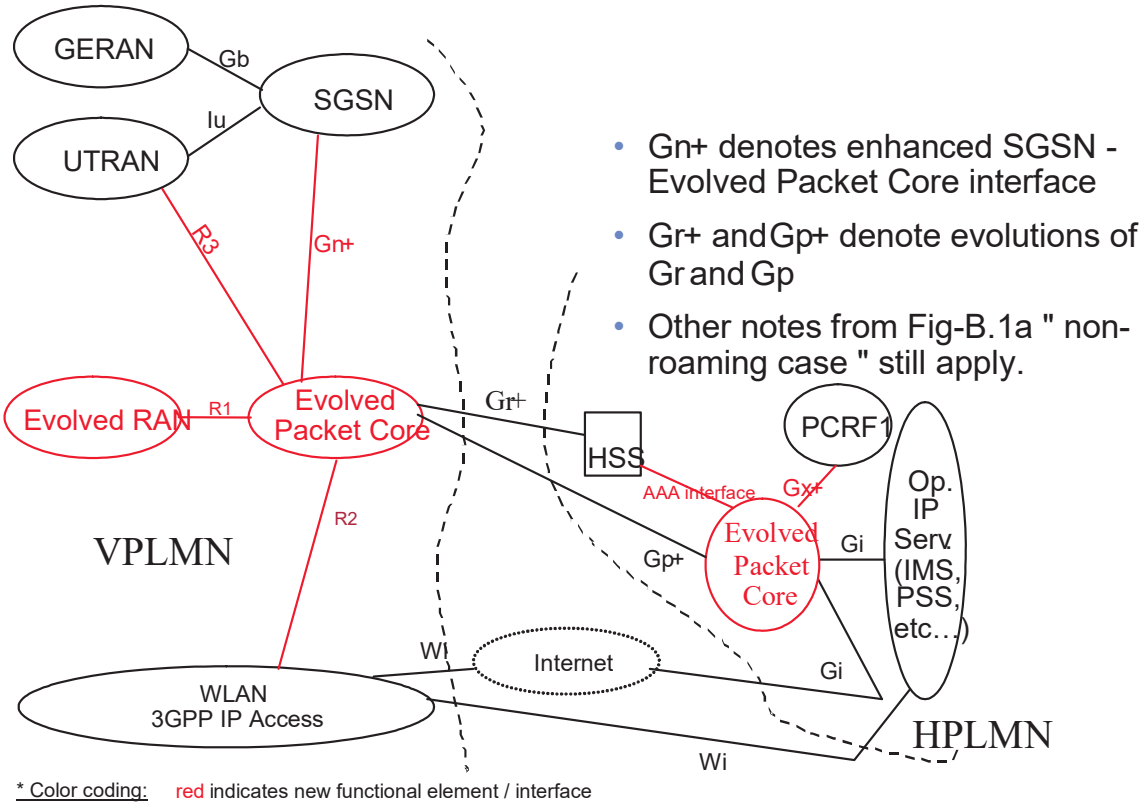

- Gn+ denotes enhanced SGSN - Evolved Packet Core interface
- Gr+ and Gp+ denote evolutions of Gr and Gp
- Other notes from Fig-B.1a " non-roaming case " still apply.

Figure-B.1d: Roaming case: Evolved VPLMN, evolved HPLMN "GGSN" in HPLMN

Resmed Corp. - Ex. 1037
Page 105

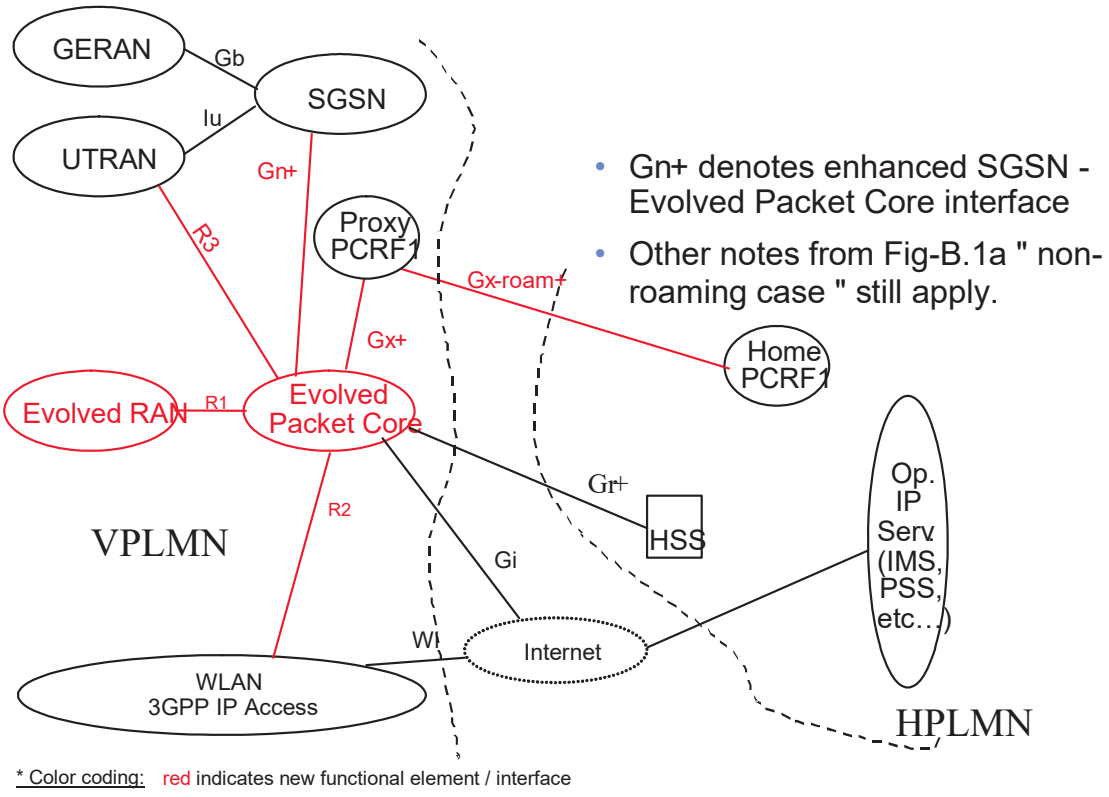

- Gn+ denotes enhanced SGSN - Evolved Packet Core interface
- Other notes from Fig-B.1a " non-roaming case " still apply.

Figure-B.1e: Roaming case Future VPLMN, future HPLMN "GGSN" in VPLMN

NOTE: The exact details of the PCC architecture to handle the "GGSN" in the VPLMN are FFS.

Resmed Corp. - Ex. 1037
Page 106

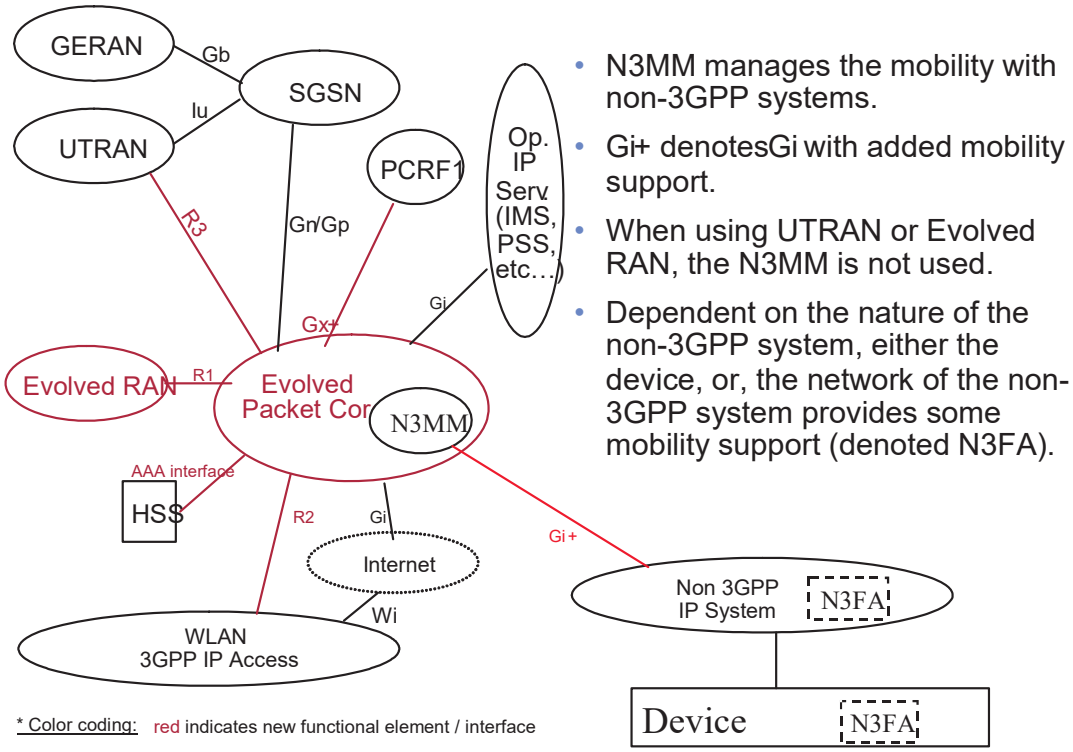

- N3MM manages the mobility with non-3GPP systems.
- Gi+ denotesGi with added mobility support.
- When using UTRAN or Evolved RAN, the N3MM is not used.
- Dependent on the nature of the non-3GPP system, either the device, or, the network of the non-3GPP system provides some mobility support (denoted N3FA).

Figure-B.1f: Non-3GPP system support

B.2 Concept B2

Figure-B.2

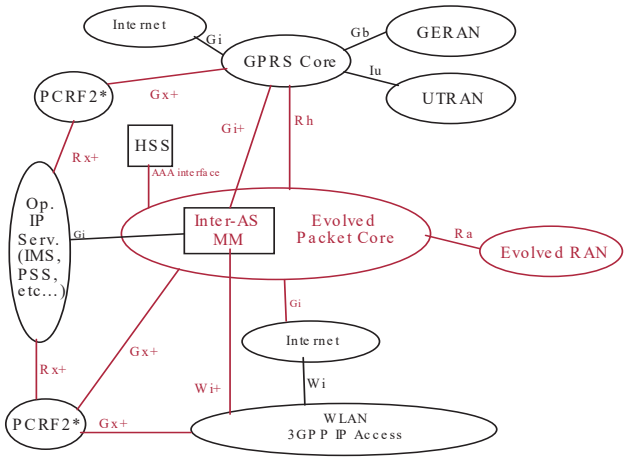

Figure B.2

Resmed Corp. - Ex. 1037
Page 107

Key and notes to figure B.2:

- Color coding: red indicates new functional element / interface
- Inter-AS MM: Inter-Access-System Mobility Management
- *PCRF2 elements are drawn twice only for figure topology reasons
- PCRF2: Evolved Policy and Charging Rules Function

NOTE-i: It is FFS how PCRF2 connects to other elements.

NOTE-ii: It is necessary to contact the same PCRF2 for a user when he moves between different access systems. How this is achieved is FFS.

- Gi+ : Gi with added Inter-AS mobility support
- Wi+ : Wi with added Inter-AS mobility support
- Rh: provides functionality to prepare handovers such that interruption time is reduced. It is intended that this interface should be generic enough to cope with other "combinations of RATs" for which handover preparation is needed.

Resmed Corp. - Ex. 1037
Page 108

Annex C:
Summary of different MM concepts

So far 3 LTE-MM states are identified:

LTE_Detached:

- The location of the UE is not known by the network (e.g. UE switched off);

LTE_Idle:

- State in which the UE has a low power consumption and can thus be kept for many days;
- Fast state transition to LTE_Active shall be supported (<=100ms excluding DTX);
- Mobility: cell reselection by the UE and traffic area change registration to the network;

LTE_Active

- UE is able to perform Uplink/Downlink transport with very limited access delay;
- Mobility: network directs the UE to serving cells;

It is FFS whether additional LTE-MM states will be required.

Resmed Corp. - Ex. 1037
Page 109

Table C.1

Mobility State	Context in E-UTRAN (including security parameters)	E-UTRAN U-plane resources established: Radio Resources	E-UTRAN U-plane resources established: Transport Network Layer Resources	Paging within Tracking Area	Tracking Area Update (please indicate size of Tracking Area, e.g. RA, NodeB)	Intra-access mobility	Inter-access mob -> UTRAN/ GERAN	Handling of roaming restrictions	Battery saving scheme
LTE_ Detached	No	No	No	No	No	No	No	No	inherently power saving
LTE_ Idle	Yes/No (note 1)	No	Yes/No (note 1)	Handled by RAN/CN (note 1)	Cell group level UE triggered	UE (re-)selects cells autonomously	UE (re-)selects cells autonomously	Within RAN (assisted by CN) or CN	inherently power saving e.g. use of DRX cycle
LTE_ Active	Yes	Yes (shared)	Yes	No paging	Cell/Node B Level – No Tracking area update	E-UTRAN directs Ues to serving cells, (note 2)	E-UTRAN directs Ues to serving cells, (note 2)	Within RAN (assisted by CN) or CN	There is a power saving substate within the Active Mode. This is the dormant substate (e.g. using DRX cycles).

NOTE 1: 4 options were expressed with respect to LTE_Idle state:

Context in E-UTRAN (including security parameters)	E-UTRAN U-plane resources established: Transport Network Layer Resources	Paging within Tracking Area	Comment
No	No	Handled by CN	Only CN is aware of UE in LTE_Idle state
Yes	Yes	Handled by E-UTRAN	Resources to Node-B remain established; Node-B will handle paging
Yes	No	Handled by E-UTRAN	Node above Node-B in E-UTRAN handles UE in LTE_Idle state, but no reservation of U-plane resources
No	Tunneling endpoints in CN remain	Handled by CN	UE and CN have the necessary shared security parameters to enable user data transfer before security parameters are sent from CN to RAN

NOTE 2: Some companies think UE based selection may be required in the Dormant Substate of the Active state.

Resmed Corp. - Ex. 1037
Page 110

Annex D:
More detailed descriptions of potential solutions for limiting signalling due to idle mode mobility between E-UTRA and UTRA/GSM

D.1 Introduction

This annex provides more information on some potential solutions that could be used to meet this requirement. Further analysis of these solutions (and other potential solutions) is needed before a decision is made.

D.2 Potential Solutions

D.2.1 Do Nothing

D.2.1.1 Overview

This does not meet the requirement to minimize the signalling due to idle mode mobility between E-UTRA and UTRA/GSM, but, is a feasible solution for single-mode E-UTRA terminals, or, if the E-UTRA coverage does not overlap other coverage areas, or, if the proportion of "dual" mode terminals is low. In this solution the terminal context in the network is only located in the network the terminal is currently camping on. As in all other solutions it is possible to utilize various hysteresis based cell selection criteria (thresholds, timer based etc.) in order to minimize the risk that the terminal toggles between different systems.

D.2.1.2 Advantages

1. No additional functionality needs to be added to the network architecture.
2. Possible to utilize any camped state in each access (e.g. URA_PCH).

D.2.1.3 Drawbacks

1. The camped terminal needs to signal the network at every inter-access cell change leading to unnecessary signalling load.
2. There is also a higher risk that the terminal will miss a page message from the network since the number of inter-access tracking area updates might be higher in this solution.

D.2.2 Common Routeing Area and common SGSN

D.2.2.1 Overview

Placing the GSM and UMTS cells into the same LA and RA is the basic part of the UMTS/GSM solution. However this does mean that both the MSC and SGSN are shared between 2G and 3G. The SGSN has to support both the Gb and Iu-ps interfaces and their different RAN/CN functional splits.

From a standardisation point of view, it would be relatively easy to extend this concept to cover E-UTRA, UTRA and GSM. However, from an implementation point of view, this requires the development core network nodes that support all of the Gb, the Iu-ps AND the E-UTRA RAN-CN interface.

Resmed Corp. - Ex. 1037
Page 111

In addition, the "signalling free movement between 2G and 3G" only applies in the "idle" state (GPRS-Standby to PMM idle) and means that the URA-PCH state does not get utilised to its full benefits.

D.2.2.2 Advantages

1. Tracking areas that overlap multiple RATs are supported which reduces signalling, assuming the E-UTRA/UTRA/GSM cells belong to the same CN node area

D.2.2.3 Drawbacks

1. Required combined PS nodes (or CS nodes) for different accesses (2G/3G, SAE / LTE)
2. Slower transition from camped to active state when the terminal is in UTRAN since it is not possible to utilize camped state containing RAN context in UTRAN (e.g. URA_PCH) and at the same time perform signalling free inter-RAT cell changes.

D.2.3 Common RAN / CN for E-UTRA / UTRA

D.2.3.1 Overview

With "basic GSM" and "EDGE", and with GSM in different frequency bands (900, 1800, etc), a common BSC can be used with all the cells in the same LA/RA.

A similar technique could be used for connecting E-UTRA and UTRA cells to the same RAN / CN. The terminal would operate using a common upper layer protocol stack for both E-UTRA and UTRA. Only the lower layers would be different depending on which technology the terminal is connected to. In this solution UTRA cells (at least HsxPA capable ones) are supported in the SAE / LTE architecture either using combined E-UTRA / UTRA nodes or using new or modified interfaces between UTRA and E-UTRA nodes. This does constrain the E-UTRA architecture since it needs to support UTRA cells, but it would permit the URA-PCH/long live Iu-ps connections to be maintained.

D.2.3.2 Advantages

1. Tracking areas that overlap E-UTRAN and UTRAN are supported, which reduces signalling
2. It is possible to utilize a concept similar to URA_PCH where tracking areas can overlap each other, which avoids hard tracking area borders.

D.2.3.3 Drawbacks

1. Tracking areas do not overlap E-UTRAN and GERAN.
2. Require that UTRA cells are integrated in the SAE / LTE network either using combined UTRA / E-UTRA nodes or using new or modified interfaces between UTRA and E-UTRA nodes.

D.2.4 Equivalent Routeing Areas and SGSN proxy

D.2.4.1 Architectural overview

The description of this mechanism is based on the architectural picture indicated below.

NOTE 1: These techniques may also be applicable to other architectural concepts (e.g. there could be an E-UTRA RNC in between the AP box and the UP/CP-GW boxes).

NOTE 2: The use of some "GPRS terminology" does NOT imply that these interfaces/functions are reused by LTE/SAE, rather, the terms are just used to aid comprehension of the concept.

Resmed Corp. - Ex. 1037
Page 112

NOTE 3: Equivalent routing areas will probably not be possible to support networks using only CS speech services in one access (e.g. GSM) and only PS speech services in another access (e.g. SAE / LTE), since CS paging will only be supported in one of the two accesses (FFS).

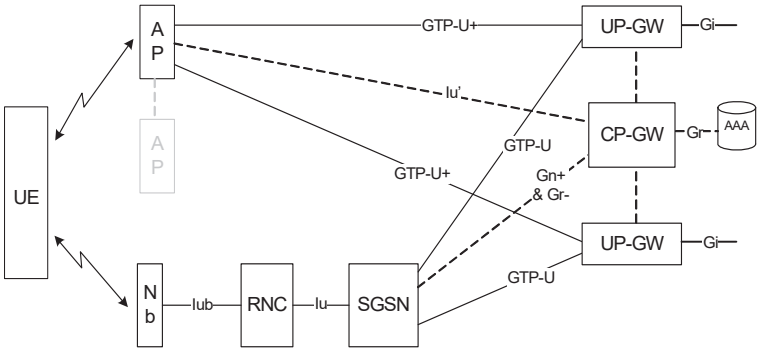

Figure D.1: architecture overview

In this architecture, the "2G/3G packet core" connects to the "evolved packet core" as follows:

- the user plane from the 2G/3G SGSN connects to the User Plane GateWay via the GTP-U part of Gn.
- the control plane part of the Gn interface connects the 2G/3G SGSN to the Control Plane GateWay via a somewhat modified GTP-C part of Gn.
- for E-UTRA capable Ues, the SGSN does not send MAP signalling to the HLR/HSS. Instead these functions are proxied across "Gr minus" to the CP-GW. The CP-GW has a Gr *reference point* between it and the HSS/AAA.

Between the E-UTRA Access Point and the core network:

- the interfaces need not be based on GTP/Iu, however, the same functional split might apply.

The GateWay:

- is split into separate Control Plane and User Plane units, and
- should support the concept that more than one "APN" may need to be supported (e.g. for Ipv4 and Ipv6, and/or for Corporate access and Public Operator MMS/IMS service), with each APN potentially being on different User Plane GateWays.

D.2.4.2 Concept: Equivalent Routeing Areas

The concept is summarised as follows:

a) the E-UTRA Access Points and UTRA/GSM cells are in separate Routeing (Tracking) Areas.

b) Upon Attach and RA update, the UE is "accepted" into multiple, Equivalent Routeing Areas. Typically, one is for E-UTRA and one is for UTRA/GSM. The UE may be allocated different P-TMSIs in the different Tracking Areas.

c) When the mobile moves between (E-UTRA) LTE-IDLE and an "inactive" UTRA state, the UE does no signalling to the network (as long as the new cell is within one of the set of Equivalent Routeing Areas). The "inactive" UTRA states are RRC-IDLE and URA-PCH. The nature of CELL-PCH and CELL-FACH are FFS.

d) Movement to E-UTRA from UTRA by mobiles in URA-PCH does NOT cause the Iu-PS connection to be released. This permits fast reconnection of the UE's data flow if the mobile later returns to UTRA.

e) While in E-UTRA, the UE keeps the periodic URA update timer running. If this expires while not in UTRA coverage, the UTRA will release the Iu connection, so when the UE next returns to UTRA coverage, it enters PMM-IDLE state.

f) If the new cell is in a Routeing Area that is not within the List of Equivalent Ras (LERA) stored in the UE, then the normal RAU procedure is performed.

Resmed Corp. - Ex. 1037
Page 113

g) When the mobile changes RAT while in an "active" state, UE-network signalling takes place to ensure that user data is correctly routed. The "active" states include LTE-active, UTRA-Cell-DCH and GPRS-Ready.

h) For E-UTRA Ues, GMM and SM contexts in the SGSN and the CP-GW are synchronised by the SGSN proxying GMM and SM signalling to the CP-GW, and, by using a 'context reference number' (CRN). Whenever the UE modifies its SM or GMM state via E-UTRA, the CRN is updated. When the UE accesses via UTRA or 2G, the UE sends the CRN to the SGSN. If the SGSN detects a CRN mismatch, the SGSN pulls the SM and GMM context from the CP-GW. Changes in the security context that are made on E-UTRA may be pushed towards the SGSN(s) in advance of the UE leaving E-UTRA.

i) The Periodic RA Update Timer is replaced with a Periodic SMU Timer, running between the UE and the CP-GW.

j) If needed, Mobile Terminating activities based on MSISDN/IMSI (e.g. Location Services, SMS) are routed to the CP-GW.

k) The Access Point informs the UP-GW(s) from which it has sent/received data if the UE leaves the LTE-Active state.

l) When the mobile is in LTE-idle and a downlink IP packet arrives at the User Plane Gateway (UP-GW) entity of the GW, then the UP-GW entity contacts the Control Plane Gateway (CP-GW), and the CP-GW initiates the Paging procedure in all of that UE's Equivalent RAIs. (Extra details are given below).

D.2.4.3 LERA Management

The CP-GW could manage LERA and update the LERA to the UE in the corresponding set of Equivalent Ras. For paging process, CP-GW could send paging to the Aps and SGSN according to the LERA it stores. SGSN does not have to store the LERA, nor has to take part into the LERA management, since the normal routing area update process will be performed.

After registration with HSS via CP-GW is finished in RA update process or in network attachment, the CP-GW may include the LERA in the confirm message to the UE.

Figure D.2 shows how the LERA is allocated for UE when UE initiates a routing area update request or attach request via 2G/3G SGSN.

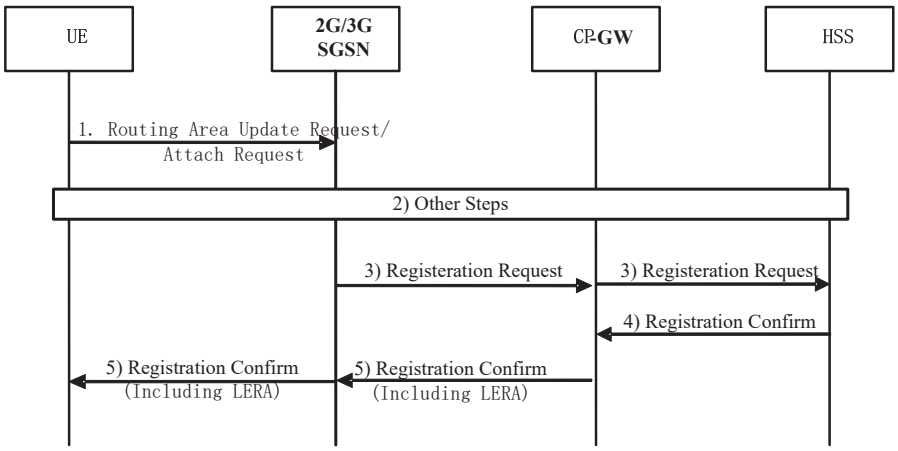

Figure D.2: Information flow for LERA management

1. UE sends RA Update Request or Attach Request to 2G/3G SGSN.

2. Other steps in RA update or Attachment processes, such as security functions.

Resmed Corp. - Ex. 1037
Page 114

3. if UE is in a legacy network, SGSN sends the registration request to the CP-GW. The registration request includes the legacy RAI, CP-GW then forwards the request to HSS.

4. HSS sends registration confirm message to CP-GW.

5. If UE is in a legacy network, CP-GW sends the registration confirm message including LERA to SGSN according the legacy RAI, and SGSN will forwards the message to UE.

D.2.4.4 Downlink data flow to an "inactive" UE

D.2.4.4.1 Solution A

When downlink packets are received at the UP-GW and the UE is in LTE-Active state, a (virtual) connection between the UP-GW and the AP may already exist for the UE. If such a connection exists, the UP-GW sends the packets directly to the AP.

After the expiry of the LTE-Active State Timer in the AP, the AP and UP-GW release the connection between them for that UE. No user plane transmission path for the UE exists for future packets received in the downlink.

When a downlink packet arrives the procedure described below is applied:

The UE may be in LTE-Active state as a result of signalling between UE and the core network and/or data transmission through a different UP-GW. In this case, a 'disconnected' UP-GW also acts as described below when a downlink packet arrives.

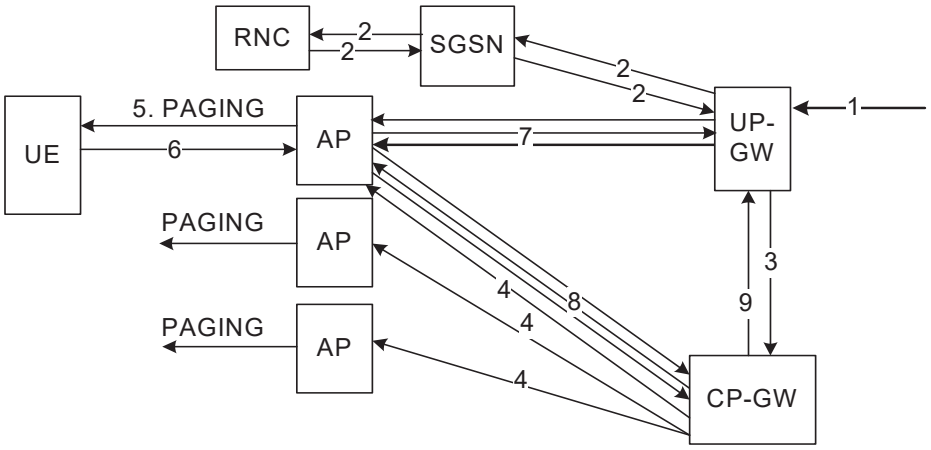

Figure D.3: Transfer from Idle to Active states for Ues caused by downlink Traffic whilst in EUTRA coverage

0 The User Plane Gateway has two flags associated with the "PDP context". One indicates whether the UE is in "LTE-active or not". The other indicates whether the last "GTP-U tunnel" to be used was "on E-UTRA or on UTRA/2G".

1 A downlink packet is received in a UP-GW function and the "LTE-active or not" flag indicates "not".

2 If the "last used tunnel" flag in the UP-GW indicates that the UE was last in the coverage of the SGSN, then the UP-GW sends the downlink packet to the UTRA/2G SGSN.

A When received by a 2G-SGSN:

I If the MS is in the Ready state then the SGSN sends the packet to the BSS.

II If the MS is in the Standby state, then the SGSN initiates paging for the MS, AND immediately returns a copy of the Packet to the UP-GW with an indication that parallel "paging in a wider area" is required. Once the 2G paging process has been completed, the SGSN returns an indication to the UP-GW of whether the MS was reachable or not (in 2G coverage).

Resmed Corp. - Ex. 1037
Page 115

B When received by a 3G-SGSN:

I If an Iu connection for this UE exists, the SGSN forwards this packet to the RNC on the Iu connection. If the UE is in URA_PCH or CELL_PCH, the RNC immediately returns a copy of the packet to the UP-GW, via the SGSN, with an indication that parallel "paging in a wider area" is required, AND, in parallel initiates paging in the URA/CELL. Once the UTRA paging process has been completed, the RNC sends the UP-GW an indication of whether the MS was reachable or not.

If the UE is in Cell_DCH, the packet is delivered to the mobile.

II If an Iu connection for this UE does not exist, the SGSN immediately returns a copy of the packet to the UP-GW with an indication that parallel "paging in a wider area" is required, AND, the SGSN initiates paging for this UE in UTRA. Once the paging process has been completed, an indication of whether the UE was reachable or not is sent to the UP-GW.

3 When receiving a downlink packet from the Gi interface when the "last used tunnel" flag in the UP-GW indicates that the UE was last in EUTRA coverage (and the "LTE-Active or not" flag is set to "not"), then, the UP-GW will contact the CP-GW requesting paging to be initiated for this UE.

Also, if the UP-GW receives a copy of a packet from an RNC/3G SGSN/2G SGSN with a request for "paging in a wider area" the UP-GW will contact the CP-GW requesting paging to be initiated for this UE in other areas.

4 The CP-GW sends a Paging message to all the Aps and SGSN which are part of Ras that have been allocated to the UE (and which are not yet paging the mobile), including the parameters needed to page the UE (c.f. IMSI in 2G/3G).

5 The UE is paged on each of the E-UTRA, UTRA and 2G Cells that are contained within the list of Equivalent RAIs allocated to the UE.

6 When the UE receives the Paging message it responds with the Service Request/Cell Update message (or E-UTRA equivalent). In EUTRA this message contains enough information for the AP to gather the context for the UE (either directly from the last registered AP or from the CP-GW). In UTRA/2G, the SGSN indicates to the CP-GW that the mobile has responded to paging.

7 The AP (or SGSN) then creates the connection to the UP-GW (via the CP-GW in the case of an SGSN). When the connection is created to the UP-GW the IP packet buffered for the UE is sent on the connection to the AP (or SGSN).

8 The AP informs the CP-GW that it controls the UE, and the CP-GW passes the QoS information to the AP for this flow.

9 The CP-GW informs the UP-GW that the Paging procedure to locate the UE was successfully completed.

Resmed Corp. - Ex. 1037
Page 116

D.2.4.4.2 Solution B

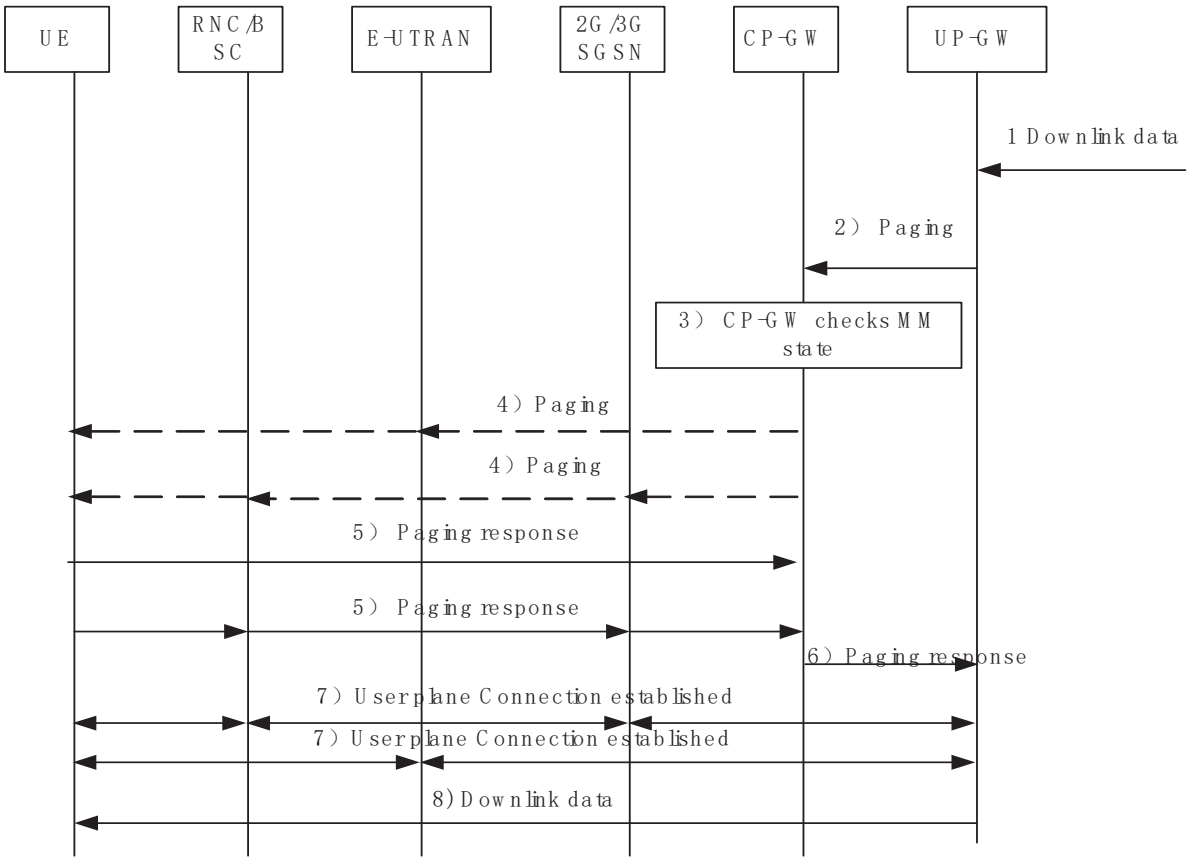

Figure D.4: Transfer from Idle to Active states for UE caused by downlink traffic arriving while UE is in LTE IDLE

0 The User Plane Gateway has a flag associated with the "PDP context", which indicates whether the UE is in "LTE-active or not".

1 A downlink packet is received in a UP-GW function and the "LTE-active or not" flag indicates "not" or a copy of a packet from RNC with a request for " paging in a wider area" is received in a UP-GW function.

2 UP-GW sends paging request to CP-GW, the paging request should indicate if "paging in a wider area" is requested.

3 CP-GW checks UE MM states, if UE is in PMM-CONNECTED State/GPRS-READY State, then go to step 6, if UE is in PMM-IDLE State/GPRS-STANDBY State or LTE-IDLE State, or the paging request from UP-GW indicates "paging in a wider area" then go to step 4.

4 The CP-GW sends a Paging message to all the Aps and SGSN which are part of Ras that have been allocated to the UE (and which are not yet paging the mobile), including the parameters needed to page the UE (c.f. IMSI in 2G/3G).

The UE is paged on each of the E-UTRA, UTRA and 2G Cells that are contained within the list of Equivalent RAIs allocated to the UE.

5 When the UE receives the Paging message it responds with the Service Request/Cell Update message (or E-UTRA equivalent). In E-UTRA this message contains enough information for the AP to gather the context for the UE (either directly from the last registered AP or from the CP-GW). In UTRA/2G, the SGSN indicates to the CP-GW that the mobile has responded to paging.

Resmed Corp. - Ex. 1037
Page 117

6 CP-GW sends paging response to UP-GW, which indicates if UE is now in coverage of UTRA/GERA. When UP-GW receives paging response, which indicates that UE is now in coverage of UTRA/GERA, then the UP-GW sends the downlink packet to the 2G/3G SGSN.

If the UE is in URA_PCH or CELL_PCH, the RNC immediately returns a copy of the packet to the UP-GW, via the SGSN, with an indication that parallel "paging in a wider area" is required, AND, in parallel initiates paging in the URA/CELL. Once the UTRA paging process has been completed, the RNC sends the UP-GW an indication of whether the UE was reachable or not.

If the UE is in Cell_DCH, the packet is delivered to the mobile.

7 User plane connection will be established between UP-GW and UE (User plane connection could be controlled by the CP-GW). The AP informs the CP-GW that it controls the UE, and the CP-GW passes the QoS information to the AP for this flow.

8 When the connection is created to the UP-GW the IP packet buffered for the UE is sent on the connection to the AP (or SGSN).

D.2.4.5 Summary

It is believed that, the description given above in Annex D, clause D.2.4 shows that this mechanism can limit "inactive mode signalling" while maintaining the E-UTRA core network separate from the 2G/UTRA core network.

Upgrades to existing equipment are necessary, but these upgrades appear to be limited to software.

There are two main differences between Solution A and B

1) In Solution B, UP-GW won't send downlink data to SGSN unless it knows there is Iu connection by information from CP-GW, so that UP-GW could handle the downlink data more efficiently.

2) UE shall always activate PDP context when it register with SGSN for Solution A, but for Solution B, it's not necessary to activate PDP context in the coverage of SGSN if there is neither uplink nor downlink data for the UE. This may benefit the UE when the UE first registers in SAE network, then moves to the coverage of SGSN, in which case, UE doesn't activate PDP context again to SGSN if there is neither uplink nor downlink data for UE.

D.2.4.6 Advantages

Editor's Note: This list is suitable for both Solution A and Solution B for Equivalent Routing area concept..

1. Allows overlapping tracking areas between E-UTRA / UTRA and GSM regardless which tracking area concept is used in each technology, which reduces signalling.
2. It is possible to assign multiple tracking areas to the terminal, which avoids hard tracking area borders also within each access.

D.2.4.7 Drawbacks

Editor's Note: this list is suitable for both Solution A and Solution B for Equivalent Routing area concept.

1. Requires updates to existing GERAN / UTRAN networks to support the equivalent tracking area concept.

D.2.5 UE remains camped on the last used RAT

D.2.5.1 Description

In this solution, the network knows the technology in which the mobile can be reached, and the paging is performed in that particular technology alone. This will require that the mobile make a location area/tracking area update whenever it makes an idle mode handover from one technology to another. Initial coverage of E-UMTS will be spotty compared to UMTS. Therefore, if the network needs to know the current technology in which the mobile can be reached, there will be a high tracking area update signalling load on the network due to idle mode handovers. It would be best if we can avoid this kind of signalling load by reducing idle mode handovers.

Resmed Corp. - Ex. 1037
Page 118

The main idea of this option is that the mobile continues to remain camped in the technology in which it last did a tracking area update, unless it enters a region where there is no coverage of that particular technology. For example, if a mobile did its last location area update in UMTS technology, it continues to remain in UMTS technology and makes its location area updates as per UMTS location areas for as long as there is UMTS coverage. Even if it enters E-UMTS coverage areas, if there is still UMTS coverage, it continues to remain in the UMTS technology. When the mobile needs to be paged, it is paged in the UMTS technology, and if there is E-UMTS coverage in that area as well, and if operator and mobile policies are such that E-UMTS is the preferred technology, then an active mode handover is carried out to the E-UMTS technology.

A minor modification of the above idea would be to have the mobile camped on the last used RAT for a certain period of time before switching over to the preferred RAT when under common coverage. This builds in a certain amount of hysterisis to reduce signalling load and at the same time reduce the occurrence of active mode handover.

The main advantage that this technique offers is that the location area/tracking area signalling load is reduced, while still allowing the network to know the exact technology in which the mobile can be reached. This benefit is obtained by postponing any inter-technology handovers in idle mode until it is actually required, i.e. when it loses coverage in the technology in which it made its last tracking area update, or when it needs to move to active mode and the alternate technology is the preferred technology for active data transfers.

D.2.5.2 Advantages

1. Paging in a single technology alone is required at all times.
2. No additional functionality needs to be added to the network architecture.
3. Reduced signalling load compared to the scheme where a tracking area update is sent when a new preferred technology is available.

D.2.5.3 Drawbacks

1. Imposes a restriction on the mobile to not perform idle mode handovers when coverage of the previous technology exists.
2. Requires an inter-technology handoff at the time of call setup, if the mobile is in the coverage area of a preferred technology, while still in idle mode in a different technology.
3. If UMTS coverage is more extensive than E-UTRA coverage, then the mobile will frequently be initiating access from UMTS. These accesses are unlikely to achieve the E-UTRA performance requirements for the transition time for moving from Idle to active mode data transfer.

D.2.6 Packet Data Bearer Proxy

D.2.6.1 Architectural overview

The description of this mechanism is based on the picture shown below.

Resmed Corp. - Ex. 1037
Page 119

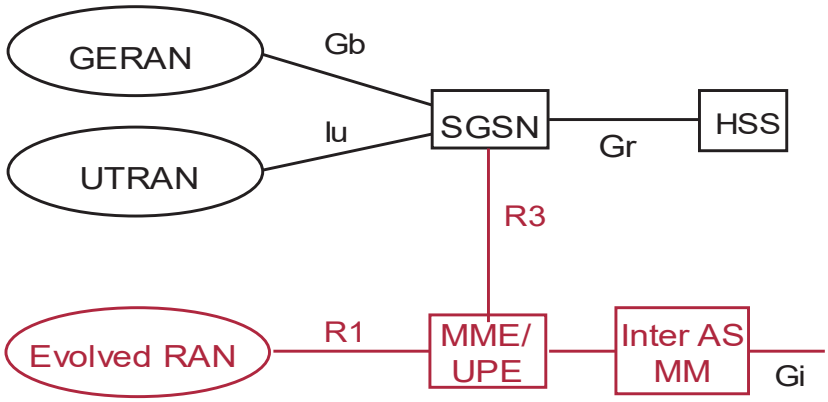

Figure D.5: architecture overview

In this mechanism the UPE is in the data path of the packet data bearer provided by the 2G/3G SGSN. The UE registers with SGSN and receives TMSI and RA from SGSN. And the UE establishes a packet data bearer, which has the UPE in the data path. A subsequent registration with the MME maintains the TMSI and RA from SGSN and allocates in addition TMSI and RA from MME to UE. The UE remains registered at SGSN and the SGSN at HSS. After this registration with MME the UE may change between 2G/3G access and Evolved RAN without any registration signalling.

Uplink data the UE may send to the 2G/3G SGSN or to the MME/UPE. Both are in the data path of the UE's packet bearer service. Downlink data are duplicated by the MME/UPE and duplicates are forwarded to the 2G/3G SGSN so that both SGSN and MME/UPE start paging. Data are sent by that entity, which receives the paging response from the UE.

Resmed Corp. - Ex. 1037
Page 120

D.2.6.2 Information flow: registration and downlink data transfer

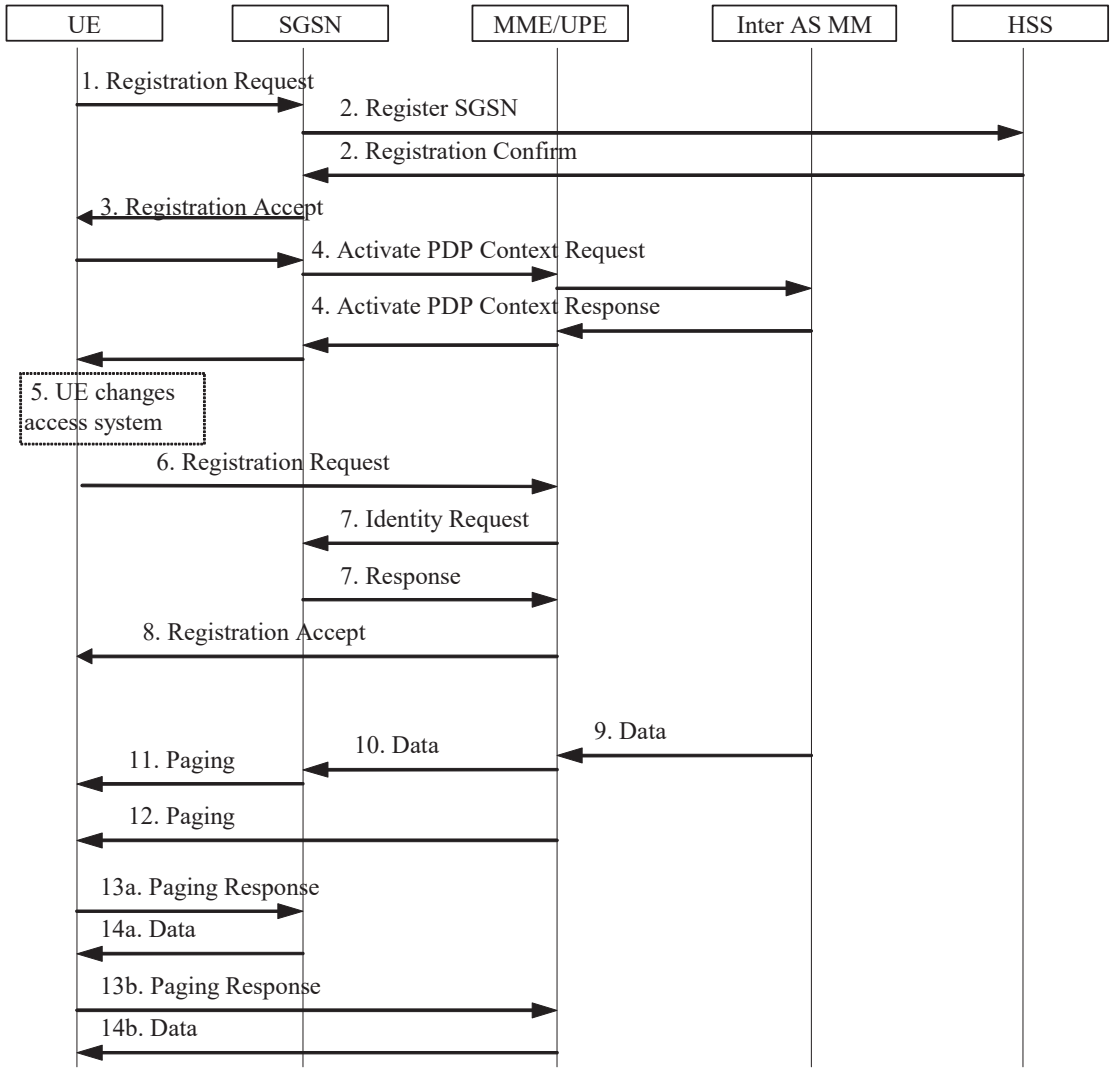

Figure D.6: message flow

0) In case the UE performs its first registration with MME/UPE this is performed as without any optimisation for limiting idle state signalling. The mechanism starts when the UE registers with the 2G/3G SGSN, e.g. because of selecting 2G/3G access.

1) The UE registers with the 2G/3G SGSN.

2) The 2G/3G SGSN registers at HSS and retrieves subscriber data, e.g. authentication data.

3) In case of successful authentication/authorisation the SGSN accepts the UE registration.

4) The UE request the establishment of the default IP bearer service if not already established. The packet bearer service is established by the SGSN towards the MME/UPE. The MME/UPE establishes the packet bearer service towards the inter AS MM. As a result of the IP bearer service establishment the MME/UPE is in the data path of the packet bearer service provided by the SGSN.

5) The UE changes to the Evolved RAN.

6) The UE sends a registration request to the MME/UPE and sends old TMSI and old RA.

7) The MME/UPE requests subscriber data from SGSN. The SGSN address is derived from old TMSI/RA. The UE is identified by old TMSI/RA.

Resmed Corp. - Ex. 1037
Page 121

8) The MME/UPE confirms the registration and allocates new TMSI/RA to the UE. And the MME/UPE sends the old TMSI/RA to the UE for the 2G/3G SGSN. The 2G/3G SGSN remains registered at HSS. The UE may change between 2G/3G and LTE access without network registration.

9) Downlink data arrive at MME/UPE.

10) The MME/UPE stores data and forwards duplicates to the SGSN.

11) The SGSN pages the UE in the 2G/3G RA.

12) The MME/UPE pages the UE in the RA of the Evolved RAN.

13a) In case the UE responds to the SGSN the SGSN sends data to the UE in step 14a).

13b) In case the UE responds to the MME/UPE the MME/UPE sends data to the UE in step 14b).

In case URA_PCH shall be included in idle state handling an inactivity timer in MME/UPE may be used to decide whether paging is performed on last used RAT or on all RATs. Alternatively, a message from UTRAN to MME/UPE may indicate the transfer to URA_PCH, which causes paging in all RATs instead of URA-only.

D.2.6.3 Advantages

1. Allows Ues to be registered in Tracking Areas of E-UTRAN, UTRAN and GERAN, which reduces signalling for idle state Ues.
2. Can be applied without modifying 2G or 3G SGSNs.
3. Can handle URA_PCH as idle state allowing for fast transitions from camped to active state when the UE is on UTRAN.
4. Allows to limit updates by Ues at TA borders by overlapping Tas or by confirming multiple TA at least for SAE/LTE (for 2G/3G see drawbacks).
5. Does not require Gr (MAP) at the SAE entities.

D.2.6.4 Drawbacks

1. Some potential limitations as subscriber control and registration with HSS remains on SGSN and control on SAE entities is via bearer service control. The specific limitations are FFS.
2. Some modification of the SGSN (multiple TA in update confirmation) needed to further improve the amount of idle state signalling reduction.
3. Some modification of the SGSN and RNC (signalling of transition to URA_PCH to SAE entity) needed to further improve the amount of idle state signalling reduction if URA_PCH is handled as an idle state.
4. The LTE MME/UPE is on the signalling and data path for 2G/3G access, which is no drawback when MME/UPE and Inter AS MM are combined into one network entity.

D.2.7 Inter RAT Resource Allocation

D.2.7.1 Architectural overview

The description of this mechanism is based on the picture shown below.

Resmed Corp. - Ex. 1037
Page 122

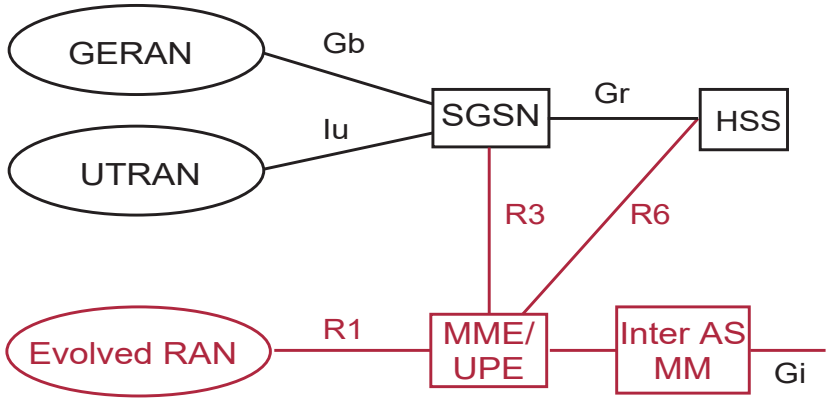

Figure D.7: architecture overview

The UE registers with the MME/UPE and receives a TMSI, an RA of the Evolved RAN and an RA from 2G/3G access. The MME/UPE registers with the HSS. After this registration with MME/UPE the UE may change between 2G/3G access and Evolved RAN without any registration signalling.

When downlink data arrive at MME/UPE the MME/UPE starts paging in the RA of the Evolved RAN and the MME/UPE requests the SGSN to page the UE within the 2G/3G RA. When the UE responds to the MME/UPE data are sent by the MME/UPE to the UE. When the UE responds to the SGSN a data path is established between MME/UPE and SGSN and data are sent by the SGSN to the UE.

For uplink data transfer the UE request MME/UPE or SGSN, respectively to establish data transfer resources. When the UE camps on Evolved RAN this is straightforward like without this mechanism of reducing idle state signalling. When the UE camps on 2G/3G access the SGSN establishes in addition a data path to the MME/UPE and forwards data received from the UE to the MME/UPE. The SGSN derives the serving MME/UPE from information sent by the UE (e.g. the RA of the Evolved RAN) or the SGSN could receive such information from the MME/UPE already during the UE's registration.

Resmed Corp. - Ex. 1037
Page 123

D.2.7.2 Information flow: registration and uplink/downlink data transfer

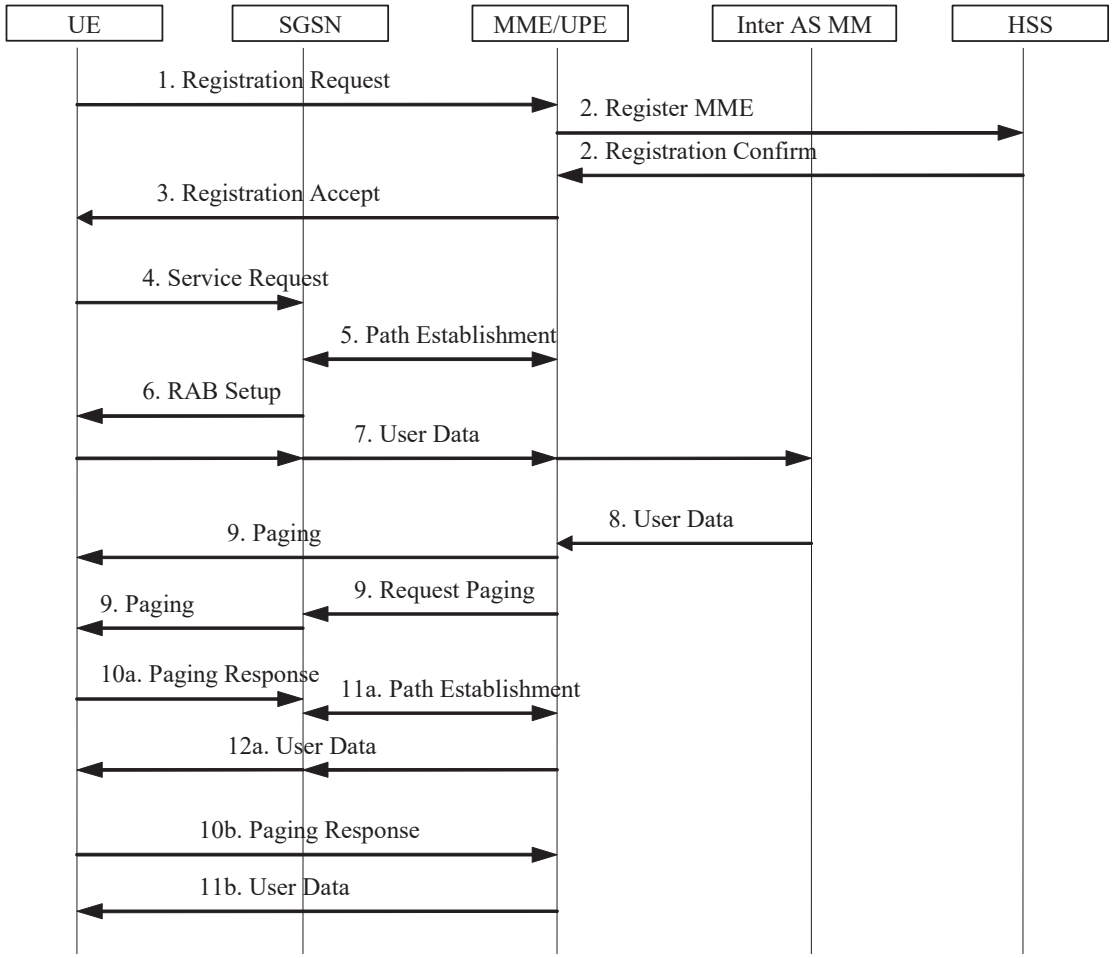

Figure D.8: message flow

0) In case the UE performs its first registration with 2G/3G this is performed as without any optimisation for limiting idle state signalling. The mechanism starts when the UE registers with the MME/UPE, e.g. because of selecting LTE access. Alternatively, the SGSN may confirm 2G/3G TMSI/Ras and Evolved RAN TMSI/Ras to the UE. This allows the UE to change between 2G/3G and LTE in idle state without any update signalling. This alternative requires SGSN modifications.

1) The UE request registration at the MME/UPE.

2) The MME/UPE registers at HSS and retrieves subscriber data, e.g. authentication data.

3) In case of successful authentication/authorisation the MME/UPE accepts the UE registration and sends TMSi and Ras from Evolved RAN and from 2G/3G access to UE. In case this is the network attach the UE is provided with the IP configuration. This step may include communication between MME/UPE and SGSN to derive 2G/3G RA and TMSI and to establish a UE context in the SGSN.

4) The UE camps on 2G/3G access and needs to transfer uplink data. It performs the Service Request Procedure in case it camps on 3G access.

5) The SGSN establishes a data path with the MME/UPE that serves the UE. The data path may be established by existing or by enhanced Gn procedures. The address of the MME/UPE may be stored by the SGSN in an UE context, which is established in step 3. The UE may be authenticated by the SGSN.

6) The SGSN initiates the RAB establishment.

7) The UE sends uplink user data to the SGSN, which the SGSN forwards to MME/UPE.

Resmed Corp. - Ex. 1037
Page 124

8) Downlink data arrives at MME/UPE.

9) The MME/UPE pages the UE in the RA of the Evolved RAN and the MME/UPE request the SGSN to page the UE in the 2G/3G RA.

10a) In case the UE responds to the SGSN the SGSN establishes a data path with the MME/UPE in step 11a) and the MME/UPE sends user data to the UE via SGSN in step 12a). The data path may be established by existing or by enhanced Gn procedures.

10b) In case the UE responds to the MME/UPE the MME/UPE sends user data to the UE in step 121).

In case URA_PCH shall be included in idle state handling an inactivity timer in MME/UPE may be used to decide whether paging is performed on last used RAT or on all RATs. Alternatively, a message from UTRAN to MME/UPE may indicate the transfer to URA_PCH, which causes paging in all RATs instead of URA-only.

D.2.7.3 Advantages

1. Allows Ues to be registered in Tracking Areas of E-UTRAN, UTRAN and GERAN, which reduces signalling for idle state Ues.
2. Can handle URA_PCH as idle state allowing for fast transitions from camped to active state when the UE is on UTRAN.
3. Allows to limit updates by Ues at TA borders by overlapping Tas or by confirming multiple Tas for every RAT to the UE.
4. Does not require Gr (MAP) at the SAE entities.

D.2.7.4 Drawbacks

1. Some modification of the SGSN needed (multiple TA in update confirmation, interaction with MME/UPE).
2. Some modification of the SGSN and RNC (signalling of transition to URA_PCH to SAE entity) needed if URA_PCH is handled as an idle state.
3. The LTE MME/UPE is on the signalling and data path for 2G/3G access, which is no drawback when MME/UPE and the anchor between 3GPP access systems are combined into one network entity.

D.2.8 User-IP layer interconnection

D.2.8.1 Architectural overview

The description of this mechanism is based on the figure as shown below.

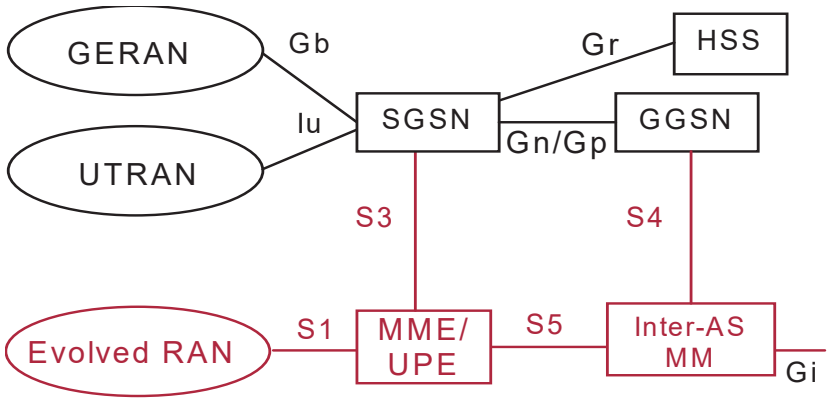

Figure D.9: architecture overview

Resmed Corp. - Ex. 1037
Page 125

In this mechanism the Inter-AS MM is the mobility anchor using IP based mobility mechanism (e.g. Mobile IP and any enhancement of it) and is located within the data path of the packet data bearers provided by both 2G/3G and LTE system.

The UE subsequently registers with both 2G/3G PS domain and MME/UPE, and receives two TMSIs and Ras. Accordingly, two different local IP addresses IP_{Local} are allocated to the UE for each access system (i.e. 2G/3G PS domain and SAE/LTE network). The global IP address IP_{Global} shall be allocated as well by the Inter-AS MM (e.g. HA when MIP is used as mobility protocol). IP_{local} allocated by the 2G/3G PS domain shall be reported to the inter-AS MM and used as the default query address (i.e.Care-of-Address for MIP) of the UE. The UE may remain registered at SGSN and the SGSN at HSS. After this registration with both 2G/3G and LTE system, the UE may change between 2G/3G access and Evolved RAN without any more registration signalling.

Uplink data the UE may send out directly via 2G/3G PS domain or MME/UPE. Downlink data shall be delivered by the inter-AS MM to the GGSN. Then the 2G/3G PS domain can send paging request to MME/UPE so that both SGSN and MME/UPE can start paging. The paging response from the UE shall cause the query address IP_{Local} binding updating to this entity, which receives this paging response and shall send out data later.

D.2.8.2 Information flow: registration and downlink data transfer

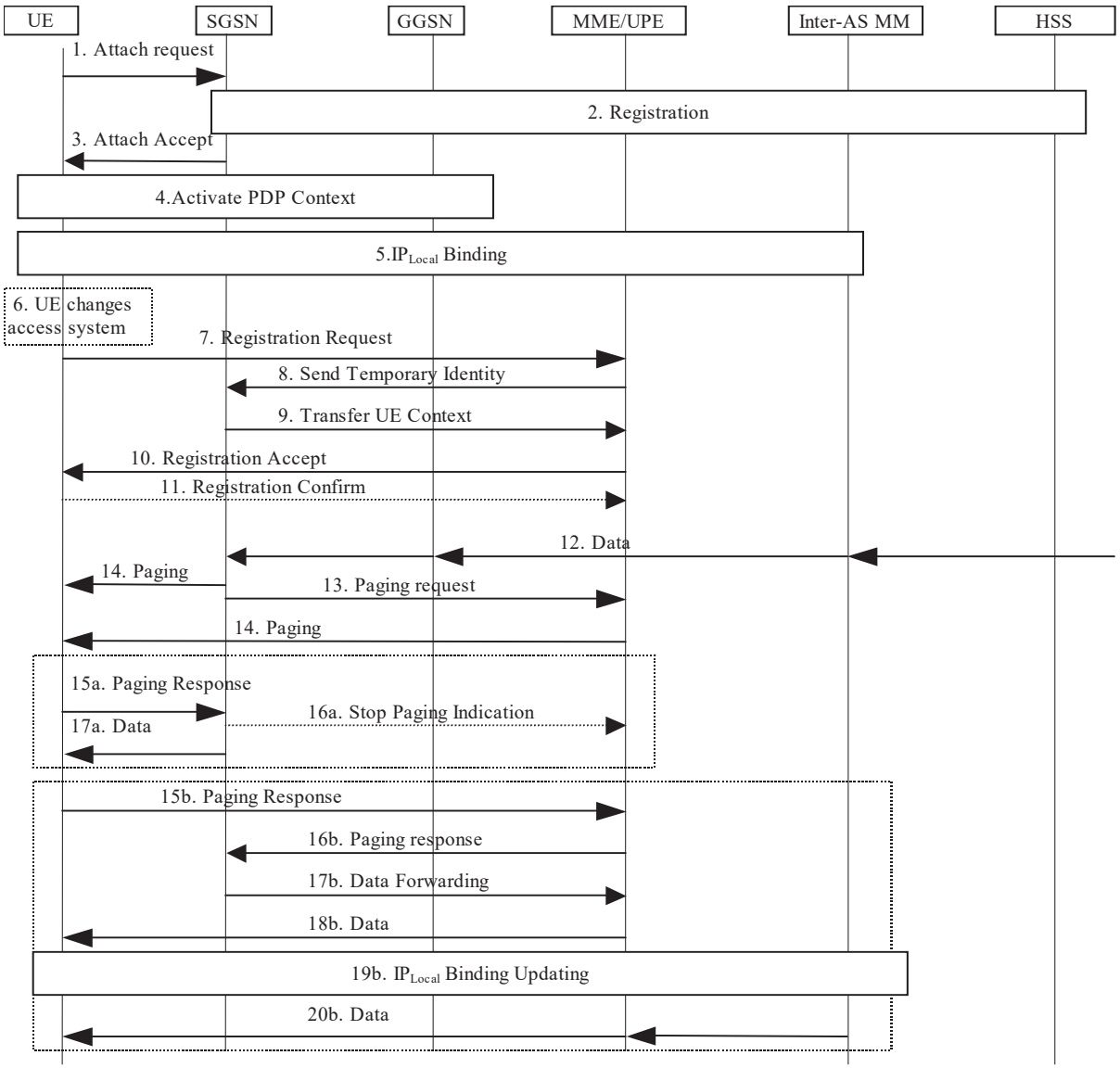

Figure D.10: message flow when UE selects 2G/3G access at first

Resmed Corp. - Ex. 1037
Page 126

0) The mechanism starts when the UE registers with the 2G/3G SGSN, e.g. because of selecting 2G/3G access.

1) The UE attaches to the 2G/3G PS domain.

2) The 2G/3G SGSN registers at HSS and retrieves subscriber data, e.g. authentication data.

3) In case of successful authentication/authorisation, SGSN accepts the UE attachment.

4) The UE request the establishment of the default IP bearer service within the 2G/3G PS domain if not already established. The local IP address IP_{Local} allocated by GGSN and the global IP address IP_{Global} allocated by inter-AS MM shall be distributed to the UE as well.

5) IP_{Local} allocated by GGSN shall be binding to the inter-AS MM. It is FFS whether this IP_{Local} Binding operation shall be carried out by the GGSN or the UE itself.

6) The UE changes to the Evolved RAN.

7) The UE sends a registration request to the MME/UPE and sends old TMSI and old RA assigned by the SGSN to identify itself.

8) The MME/UPE sends the UE parameters to SGSN.

9) The SGSN sends a UE context to MME/UPE. The UE context includes a permanent user identity and other information, e.g. security and QoS information.

10) The MME/UPE confirms the registration and allocates new set of TMSI/RA/IP_{Local} to the UE. The old set of TMSI/RA/IP_{Local} shall be kept by the UE as well. The SGSN remains registered at HSS. Then the UE may change between 2G/3G and LTE access without further network registration.

11) The UE may acknowledge the success of the network registration.

12) The incoming downlink data is forwarded by inter-AS MM to GGSN, and then SGSN.

13) SGSN sends the paging request to MME/UPE.

14) Both SGSN and MME/UPE start paging the UE in their own RA/TA.

15a) In case the UE responds to the SGSN, SGSN sends data to the UE in step 17a).

16a) SGSN may send one indication to MME/UPE to stop paging (FFS).

15b) In case the UE responds to the MME/UPE, MME/UPE shall send out one paging response indication to SGSN in step 16b).

17b) SGSN shall forward the received data to MME/UPE using 2G/3G existing mechanism.

18b) MME/UPE delivers the data to UE.

19b) Another IP_{local} binding updating procedure shall be carried out by the UE or MME/UPE(FFS.) .

20b) Subsequently the data shall be forwarded by inter-AS MM to MME/UPE, and then UE.

It should be noted that it is the similar procedure for the case when UE selects and registers SAE/LTE system at first.

It also should be noted that although "data forwarding by SGSN" is adopted in the above figured D.10, it is FFS whether other mechanisms can be used instead to deal with the data received before paging response is acknowledged.

D.2.8.3 Advantages

1. Allows Ues to be registered in Tracking Areas of E-UTRAN, UTRAN and GERAN, which reduces signalling for idle state Ues.

2. Does not require Gr (MAP) at the SAE entities.

3. Similar user-IP layer mobility management mechanism (e.g. MIP), which is also used for between 3GPP and non-3GPP access system mobility management.

Resmed Corp. - Ex. 1037
Page 127

D.2.8.4 Drawbacks

1. Some modification of SGSN needed to support initiate paging request to MME/UPE.
2. Some potential limitations as subscriber control and registration with HSS remains on SGSN and control on SAE entities is via bearer service control. The specific limitations are FFS.
3. Some modification of the SGSN (multiple TA in update confirmation, new message to provide all subscription information to MME/UPE) needed to further improve the amount of idle state signalling reduction.
4. Some modification of the SGSN and RNC (signalling of transition to URA_PCH to SAE entity) needed to further improve the amount of idle state signalling reduction if URA_PCH is handled as an idle state.

D.2.9 Combined MME/SGSN

D.2.9.1 Architectural overview

This mechanism is based on the architecture where MME is separated from UPE and where MME is co-localised with 2G/3G SGSN to reduce over the air signalling between 2G/3G and SAE MME, avoiding unnecessary Mobility and messages for Paging coordination. This will also result in a reduction in signalling with the HSS.

This proposal is based on the concept of Equivalent RA and is also valid when SAE UPE is separated from the Anchor.

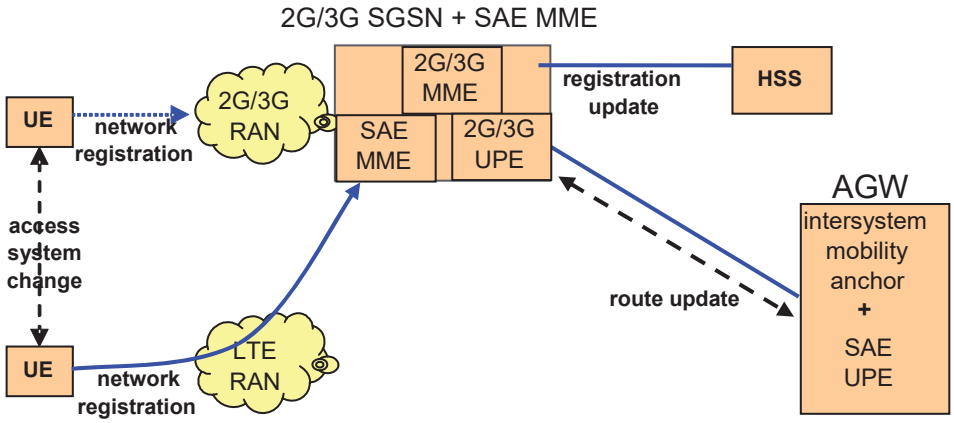

Resmed Corp. - Ex. 1037
Page 128

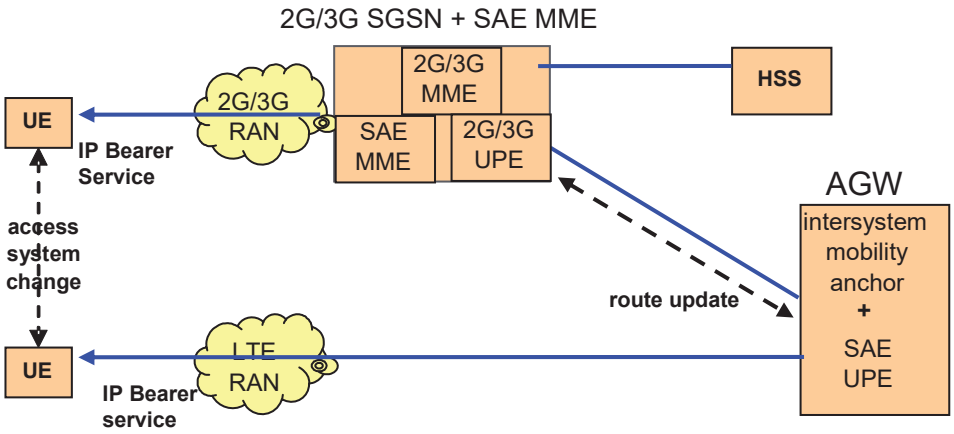

Figure D.11: Architecture overview

In this mechanism the UPE is in the data path of the packet data bearer provided by the 2G/3G SGSN.

If the UE is under 2G/3G coverage, the UE registers with SGSN and receives TMSI and RA and an Equivalent RA from SGSN. If the UE was under SAE coverage and registered with the MME, it would have received the same TMSI and TA and list of Equivalent RA from the MME. After the UE has completed it's registration with the HSS via MME/SGSN during either the RA update procedure or network attachment, the MME/SGSN includes the List of Equivalent RA (LERA) in the confirm message to the UE.

When the UE registers with the Combined SGSN/MME the HSS is updated and a default packet bearer is established between the Combined SGSN/MME and the UPE/Anchor. The UE remains registered at the combined SGSN/MME until it changes Pool Area.

After registering in one Domain, the UE may move between 2G/3G access and Evolved RAN in IDLE mode without any signalling due to presence of same Equivalent RA under the two Domains.

If the UE was last in 2G/3G SGSN coverage and a downlink data arrives in UPE, DL PDU are duplicated and duplicates are forwarded to the Combined SGSN/MME. If the UE was last in SAE coverage and a downlink data arrives in UPE, paging request is sent to MME.

If the UE is in IDLE mode the Combined SGSN/MME initiates paging procedure: MME sends paging to the eNodeB according to the TA of last known Equivalent RA, SGSN sends paging to RA of Equivalent RA. If the SGSN receives the Paging response, data is sent by that entity. If the paging response is received by the MME, the MME establishes UP between Access node and UPE and data is forwarded to Access node.

The paging response might be a Routing or Tracking area (if the UE had changed access technology) and if so this proposal avoids new signalling to the HLR which minimizes the time required to buffer the downlink packet which triggered the paging.

D.2.9.2 Downlink data flow to an "inactive" UE

When downlink packets are received at the UPE and the UE is in LTE-Active state, a (virtual) connection between the UPE and the eNodeB may already exist for the UE. If such a connection exists, the UPE sends the packets directly to the eNodeB.

After the expiry of the LTE-Active State Timer in the eNodeB, the eNodeB will inform the MME which will then remove the bearer connection between them eNodeB and UPE. . No user plane transmission path between the eNodeB and UPE exists for the UE.

Resmed Corp. - Ex. 1037
Page 129

When a downlink packet arrives the procedure described below applies:

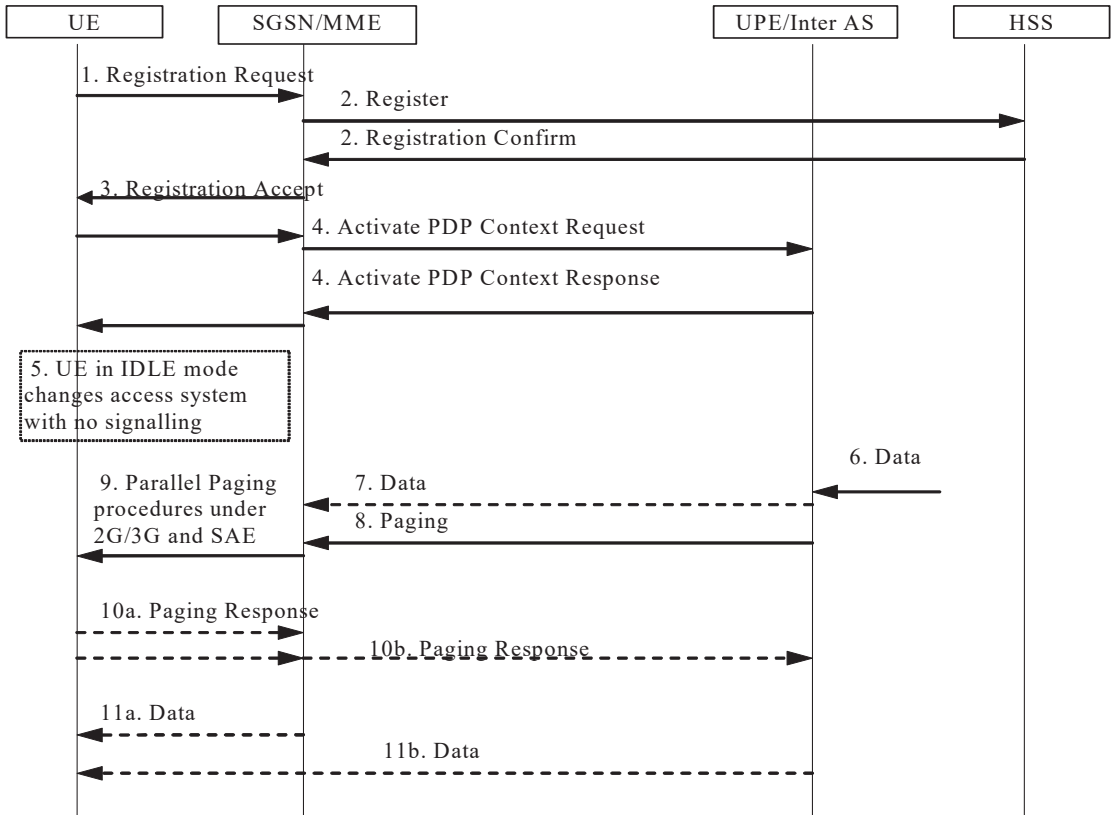

1. A LTE-capable UE performs a registration with the SGSN if under 2G/3G coverage or with the MME if under SAE coverage.
2. The SGSN/MME registers at HSS and retrieves subscriber data.
3. In case of successful authentication/authorisation, the SGSN/MME accepts the UE Registration.
4. If the UE is under 2G/3G coverage, it activates a default PDP Context, the SGSN interface with UPE to establish the bearer plane. If the UE is under SAE coverage, default bearer is defined with UPE. The UPE knows in which combined SGSN/MME node the UE camps.
5. The UE moves to IDLE mode. SAE Default bearer is released if present. The UE moves between access types (from 2G/3G to SAE or from SAE to 2G/3G) without exchanging new signalling with the Network.
6. Downlink data arrives at UPE
7. If a tunnel exists with the SGSN, the UPE stores downlink packets and forwards duplicates to the SGSN. If there is no Iu connection for the UE, SGSN initiates paging in last known RA of the UE, else it forwards DL PDU to the appropriate RNC. MME pages the UE in the last known TA of the UE.
8. If there is no tunnel with the SGSN, the UPE stores downlink packets and initiates a paging request with the combined SGSN/MME. The combined MME/SGSN initiates 3G paging in last known RA and in last known TA (Equivalent RA).
9. Paging takes place in the two Domains (2G/3G and SAE) in parallel. The UE is paged on each of the E-UTRA, UTRA and 2G Cells that are contained within the list of Equivalent RAIs allocated to the UE. If an Iu connection for this UE exists in the SGSN, the SGSN forwards the packets to the RNC to allow it to page the mobile and handle URA_PCH or CELL_PCH states.
10. a) and b): When the UE receives the Paging message it responds with the Service Request/Cell Update message (or E-UTRA equivalent) in the respective domain.

Resmed Corp. - Ex. 1037
Page 130

11. In case the UE responds to the SGSN, the SGSN sends data to the UE in step 11a and MME paging can be stopped. In case the UE responds to the MME, the bearer plane between eNodeB and UPE is established and the UPE forwards the IP packet buffered for the UE to the eNodeB in step 11b and SGSN paging can be stopped. If the UE changed access technology, the response will probably be either a Routing/Tracking Area Update but there is no need for the combined MME/SGSN to update the HLR, thus saving some signalling. In case the UE was in URA-PCH state, UE response to paging is not visible from the MME, MME paging shall be stopped based on a timer.

D.2.9.3 Summary

It is believed that, the description given above in Annex D, clause D.2.x shows that this mechanism can limit "inactive mode signalling".

Upgrades to existing equipment are avoided through combination of MME with 2G/3G SGSN.

D.2.9.4 Advantages

1. No signalling for coordination is needed between SGSN and MME.
2. UE is paged by the SGSN and also in Equivalent RA by the MME allowing reaching UE which have change access technology in URA-PCH state.
3. Reduces user plane latency (paging in all access technologies occurs in parallel).
4. Reduction in session setup time when transitioning from IDLE to ACTIVE as there is less interaction with the HLR.
5. Limits IDLE mode signalling due identical Equivalent RA configuration.
6. Allows overlapping tracking areas between E-UTRA / UTRA and GSM regardless which tracking area concept is used in each technology, which reduces signalling.
7. It is possible to assign multiple tracking areas to the terminal, which avoids hard tracking area borders also within each access.
8. A unique interface with the HLR is needed.
9. There is no new registration with the HLR during inter-access mobility.

D.2.9.5 Drawbacks

Editor's Note: This list was prepared with respect to "Solution A" in clause D.2.4.4.1.

1. Requires addition of MME features with SGSN

Resmed Corp. - Ex. 1037
Page 131

D.3 Information Flows

Note: all flows do not make any assumption on the collocation of entities, so some cases where IASA is distinct from MME/UPE are shown as well as some cases where it is collocated with it.

D.3.1 Attach to SAE and RAT change to 2G/3G

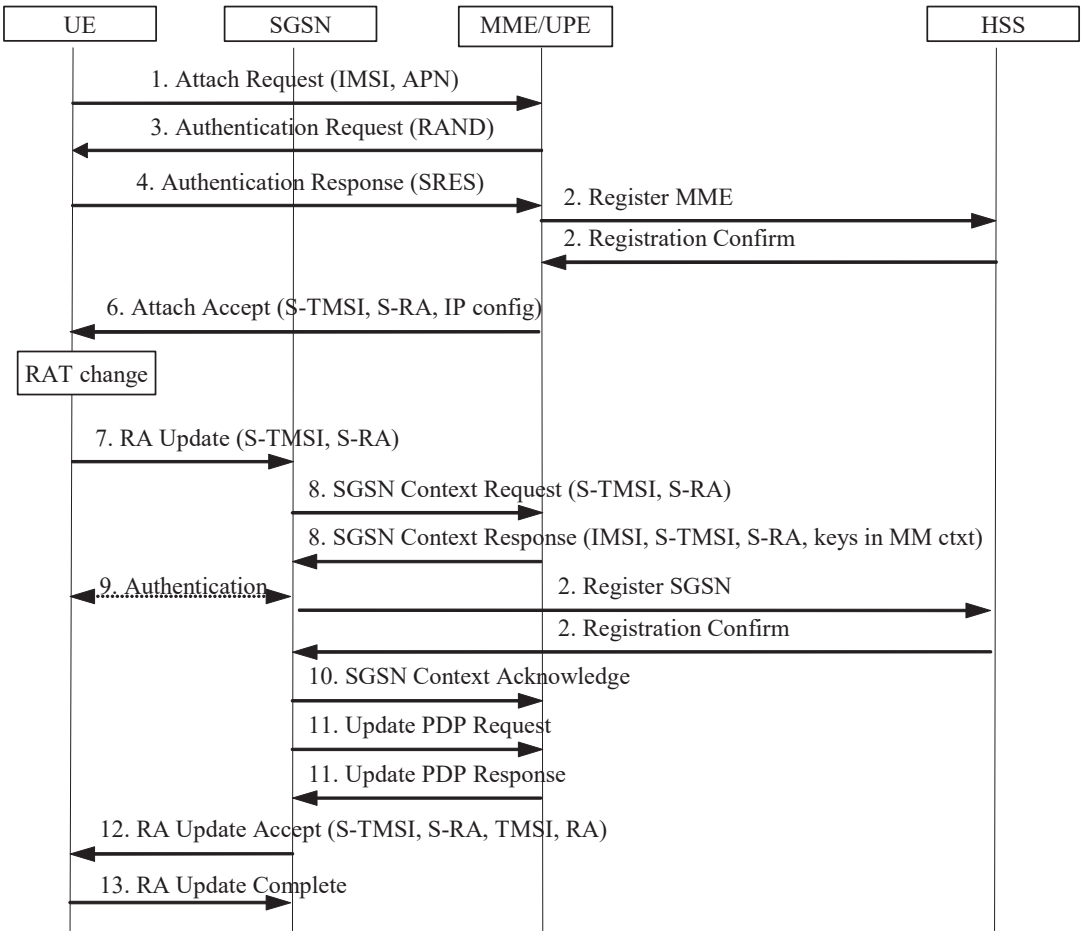

Note: any assumption on the collocation of entities cannot be derived from this figure. Implementations collocating IASA and MME/UPE are not excluded.

When the UE performs Attach or RA Update with the MME/UPE, it receives an S-TMSI and an TA of the Evolved RAN. When the UE performs Attach or RA Update with the SGSN it receives a TMSI and a RA of the 2G/3G RAN. The UE memorizes these two pairs of identifiers.

After registration once with SGSN and once with MME/UPE, the UE may change between 2G/3G access and Evolved RAN without any RA Update signalling as long as it does not change the TA or RA and does not need to send/receive UL/DL data.

When the UE moves between SGSN and MME in the allocated RA and TA, there is no UE signalling with the Network, thus no signalling with the HLR.

The MM and PDP Contexts including security parameters are always kept up-to-date on latest access (SGSN or MME/UPE) and transferred on demand to the current access as described above. This keeps security consistent data for all situations, e.g. also handover between 2G/3G and LTE. It is FFS whether during such contexts transfer procedure, the current access node shall deliver some Keep-context-indicator to make the previous access node keep the saved contexts instead of removing them. It is FFS whether such MM and PDP contexts include security contexts.

Resmed Corp. - Ex. 1037
Page 132

Optimisations e.g. using a Context reference Number are FFS. It is FFS whether periodic updates are considered as latest access.

To save some Authentication vectors and ensure the UE uses same authentication vectors for MME and SGSN as both handles same PS bearers, authentication vector can be exchanged between MME and SGSN (vectors used in the old MME can be known in the new SGSN and vice-versa). It is FFS whether the UE should use same authentication vectors for MME and SGSN.

It is FFS whether MME and SGSN are registered in parallel at the HSS, or whether only one entity MME or SGSN is registered at a time at the HSS.

It is FFS whether and how periodic updates are used. It is FFS whether and how the network detects that a UE is non-reachable (e.g. to stop paging for downlink data) or when UE contexts can be deleted from MME or SGSN after long period of inactivity.

D.3.2 Attach to UMTS and RAT change to LTE

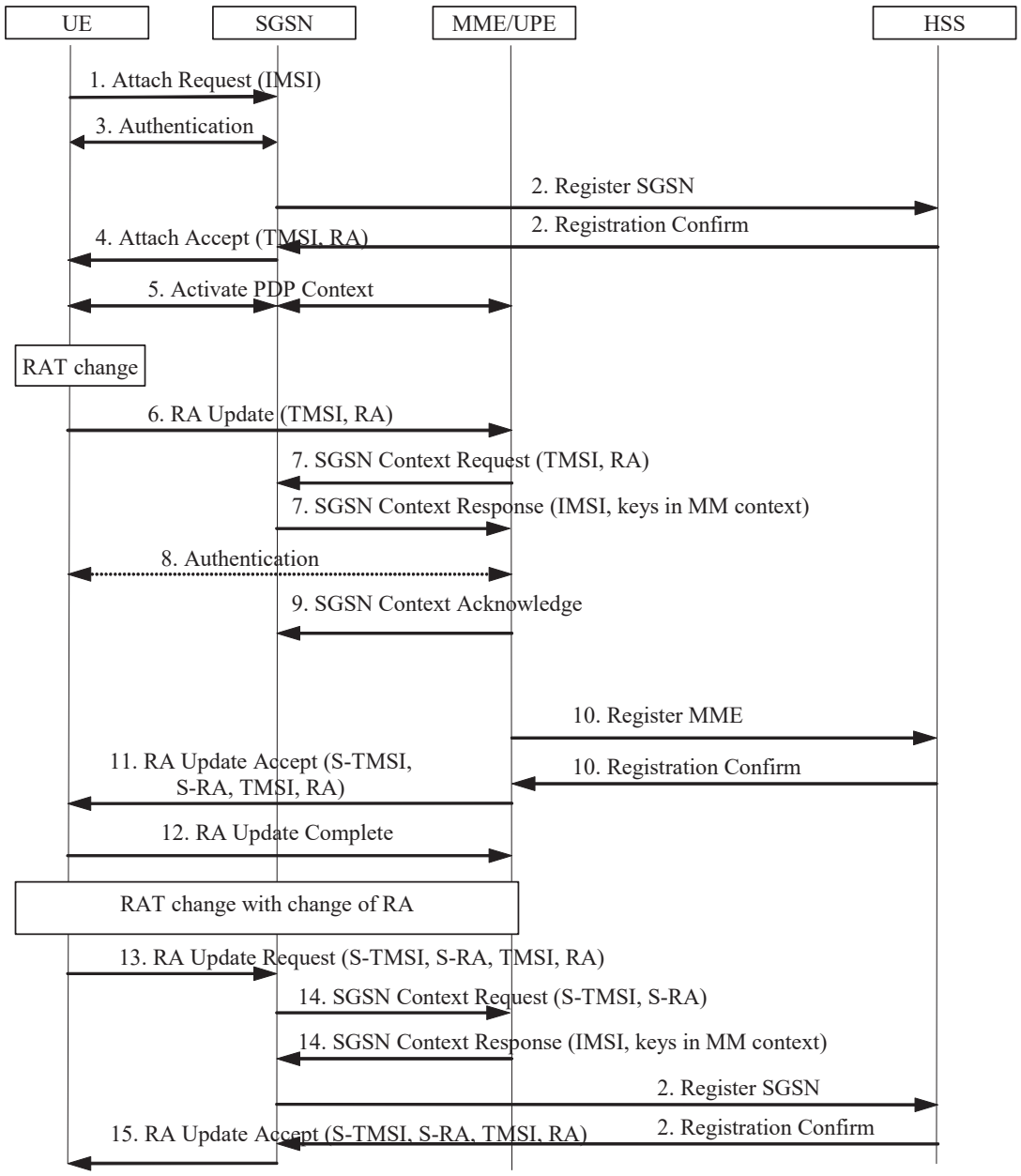

Resmed Corp. - Ex. 1037
Page 133

Note: any assumption on the collocation of entities cannot be derived from this figure. Implementations collocating IASA and MME/UPE are not excluded.

Note: It is FFS in step 6) how to derive the address of the MME/UPE that was allocated in step 56). It is FFS whether providing S-TMSI and S-TA to UE in step 5) can be used.

When the UE performs Attach or RA Update with the MME/UPE, it receives an S-TMSI and an TA of the Evolved RAN. When the UE performs Attach or RA Update with the SGSN it receives a TMSI and a RA of the 2G/3G RAN. The UE memorizes these two pairs of identifiers.

After registration once with SGSN and once with MME/UPE, the UE may change between 2G/3G access and Evolved RAN without any RA Update signalling as long as it does not change the TA or RA and does not need to send/receive UL/DL data.

When the UE moves between SGSN and MME in the allocated RA and TA, there is no UE signalling with the Network, thus no signalling with the HLR.

The MM and PDP Contexts including security parameters are always kept up-to-date on latest access (SGSN or MME/UPE) and transferred on demand to the current access as described above. This keeps security consistent data for all situations, e.g. also handover between 2G/3G and LTE. It is FFS whether during such contexts transfer procedure, the current access node shall deliver some Keep-context-indicator to make the previous access node keep the saved contexts instead of removing them. It is FFS whether such MM and PDP contexts include security context depending on SA3 decision. Whether the serving SGSN/MME should store all the up-to-date contexts both for SGSN and MME/UPE is FFS. In case of some special contexts only for one access system, those specific context may be only stored in one access system. It is FFS whether periodic updates are considered as latest access.

It is FFS whether CRN (Context Reference Number), which inflects whether the context is up-to-date in the access node) mechanism should be used to save signalling between SGSN and MME. The SGSN should send SGSN Context Request to MME only if the CRN sent by the UE mismatches with the one stored in SGSN.

To save some Authentication vectors and ensure the UE may uses same authentication vectors for MME and SGSN as both handles same PS bearers, authentication vector can be exchanged between MME and SGSN (vectors used in the old MME can be known in the new SGSN and vice-versa).

Editor's Note: is re-use of vectors meant here? It is FFS if the UE should use same authentication vectors for MME and SGSN.

It is FFS whether MME and SGSN are registered in parallel at the HSS, or whether only one entity HSSMME or SGSN is registered at a time at the HSS.

It is FFS whether SGSN should send registration at the HSS after the step 14 due to no change of the SGSN.

It is FFS whether and how periodic updates are used. It is FFS whether and how the network detects that a UE is non-reachable (e.g. to stop paging for downlink data) or when UE contexts can be deleted from MME or SGSN after long period of inactivity.

Resmed Corp. - Ex. 1037
Page 134

D.3.3 Uplink Data Transfer

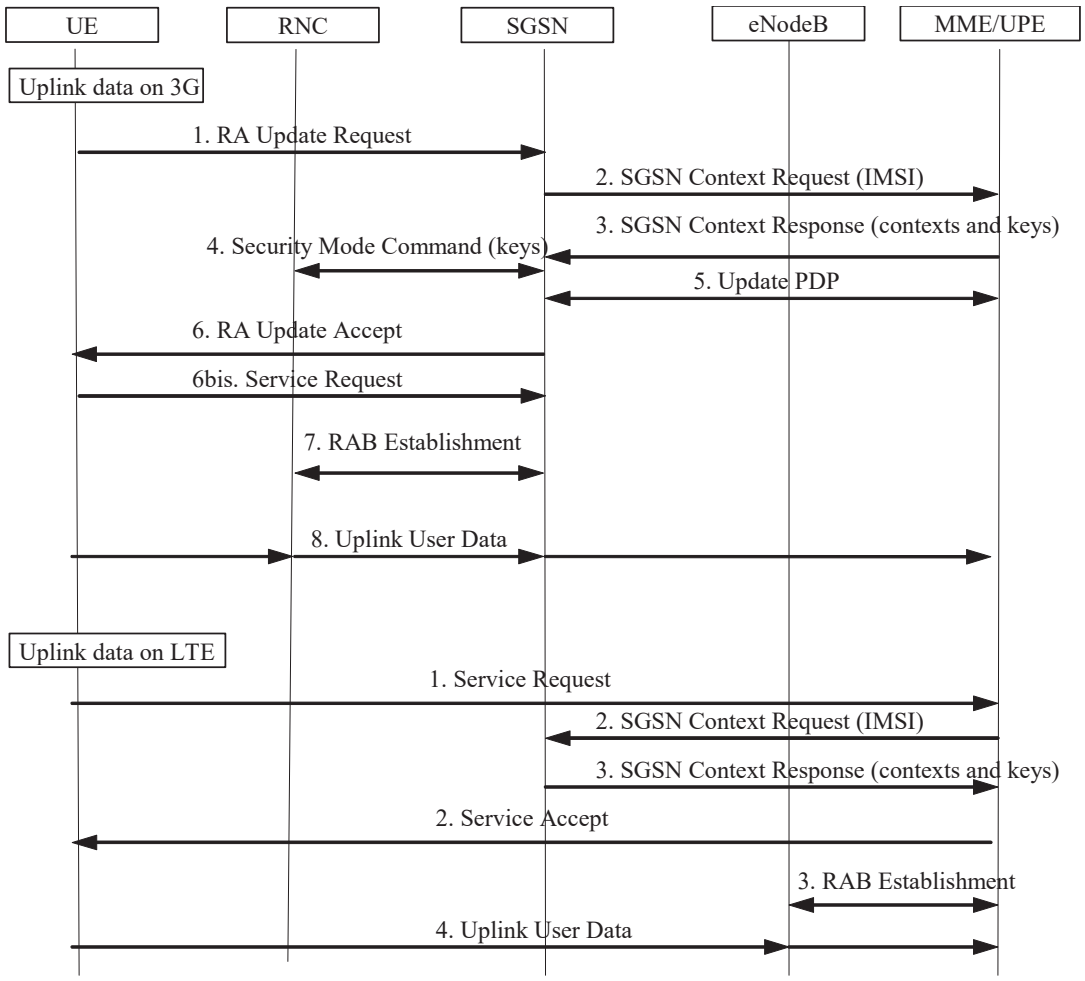

Note: any assumption on the collocation of entities cannot be derived from this figure. Implementations separating IASA and MME/UPE are not excluded.

The information flow assumes that the UE has registered to both SAE network and UMTS network for signalling free.

Note: For the uplink data on 3G, retrieving the latest context from the old MME/UPE may increase the call setup latency. Optimisation is FFS for example to move the step 2 3 4 5 after step 6bis then remove the RA procedure. Or, steps 2,3,5 may be optional as only needed when latest access was on LTE or CRN is mismatched if CRN mechanisms are applied.

The uplink data transfer on 3G may be optimised by starting immediately with a Service Request instead of RAU Request, which is FFS.

Note: for the uplink data on LTE case, it is FFS whether the MME/UPE retrieves UE contexts (step 2&3) in all cases or only when uplink data transfer is initiated on another RAT than the UE used as the latest LTE access before or CRN is mismatched if CRN mechanisms are applied.

For uplink data transfer, when the UE camps on Evolved RAN, the Service Request triggers the MME to derive up-to-date PDP context and security information from the old SGSN by means of the SGSN Context Request procedure. For uplink data transfer, when the UE camps on 2G/3G the RAU Request triggers the SGSN to derive up-to-date PDP context and security information from the old MME/UPE by means of the SGSN Context Request procedure. The UE can then initiate another NAS signalling as needed such as the Service Request re-activate PDP Sessions. This establishes in addition a data path to the MME/UPE and forwards data received from the UE to the MME/UPE.

Resmed Corp. - Ex. 1037
Page 135

D.3.4 PMM-IDLE and URA-PCH state handling

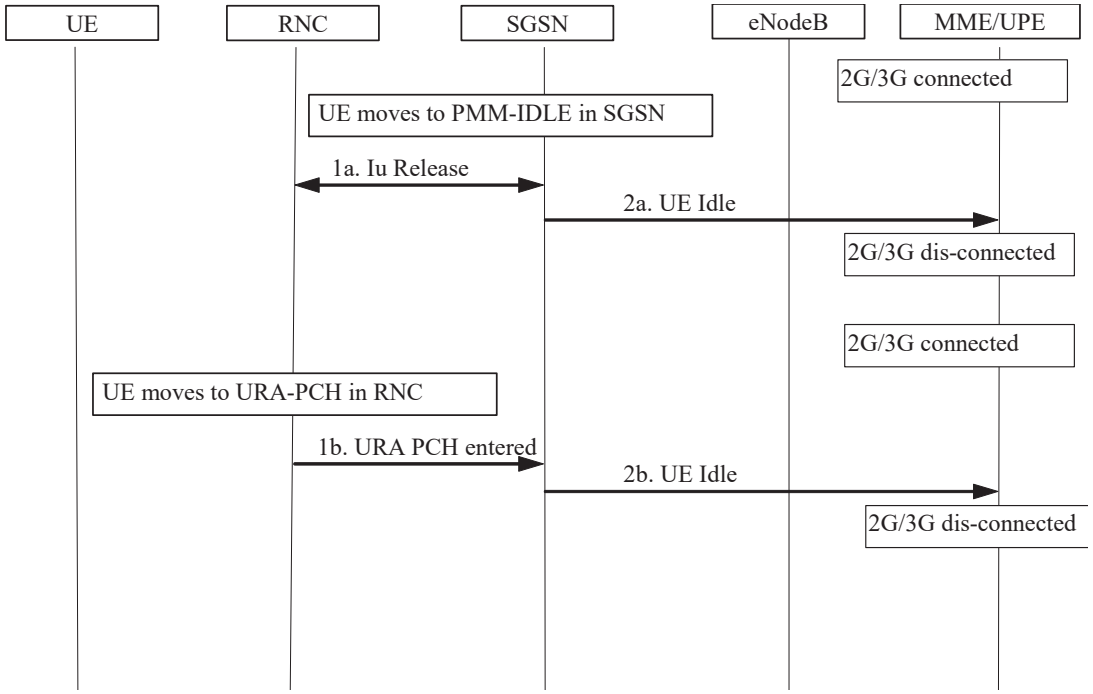

Note: any assumption on the collocation of entities cannot be derived from this figure. Implementations separating IASA and MME/UPE are not excluded.

Note: in steps 2, it is FFS whether existing SM messages can be used instead of new messages.

Note: step 1b, 2b are dependent on whether URA_PCH state should be supported for signalling free(see RP-050893 and report of RAN plenary #30). The signalling load impacts of this mechanism are FFS. The interaction of this approach with 2G Ready to Standby state transitions is FFS.

Note: how subsequent transitions from URA-PCH to other RRC connected substates (and from GPRS standby to GPRS ready) are FFS.

Whether synchronous mode or asynchronous mode is used is FFS. The above figure is synchronous mode.

To reach UE, UPE would keep two flags to indicate the UE is active or idle in E-UTRA and UTRA: one flag is "E-UTRA active or not" and another is "UTRA active or not". If both of them are "idle", the UE would be paged in the both RATs. If one of them is "active", the data would be sent to the RAN.

The information "E-UTRA active or not" is easy to get by whether the tunnel between the UPE and the ENB exists or not. But the information "UTRA active or not" is not so easy to get. To page the UE correctly, there are several mechanisms that can be used. The choice of mechanism is FFS. Two possible mechanisms are ways to achieve it:

a) synchronous mode:

Whenever the UE turns to PMM_IDLE state, the SGSN informs MME/UPE; and whenever the UE moves in URA_PCH state, the SRNC informs MME/UPE (via SGSN), so that the UPE gets "UTRA active or not" as "idle" synchronously. When downlink data arrive at the UPE, the MME/UPE starts paging in E-UTRA and the MME/UPE requests the SGSN to page the UE if the UE's "UTRA active or not" and "E-UTRA active or not" both are "idle". In case the UE responses in UTRA, the UPE set "UTRA active or not" as "active".

b) asynchronous mode:

Although the UE moves in PMM_IDLE or URA_PCH state, the MME/UPE may not know about it and the "UTRA active or not" is still "active". When downlink data arrive at the UPE, the UPE send data to the SGSN. In case the UE

Resmed Corp. - Ex. 1037
Page 136

is in PMM_IDLE state, the SGSN pages the UE in UTRA and return copy data to the UPE to indicate it to page the UE in E-UTRA. In case the UE is in URA_PCH state, the SGSN send data to SRNC, and the SRNC return copy data to the UPE (via SGSN) to indicate it to page the UE in E-UTRA. If the UE responses paging in E-UTRA, "UTRA active or not" will be set "idle".

D.3.5 Downlink Data Transfer

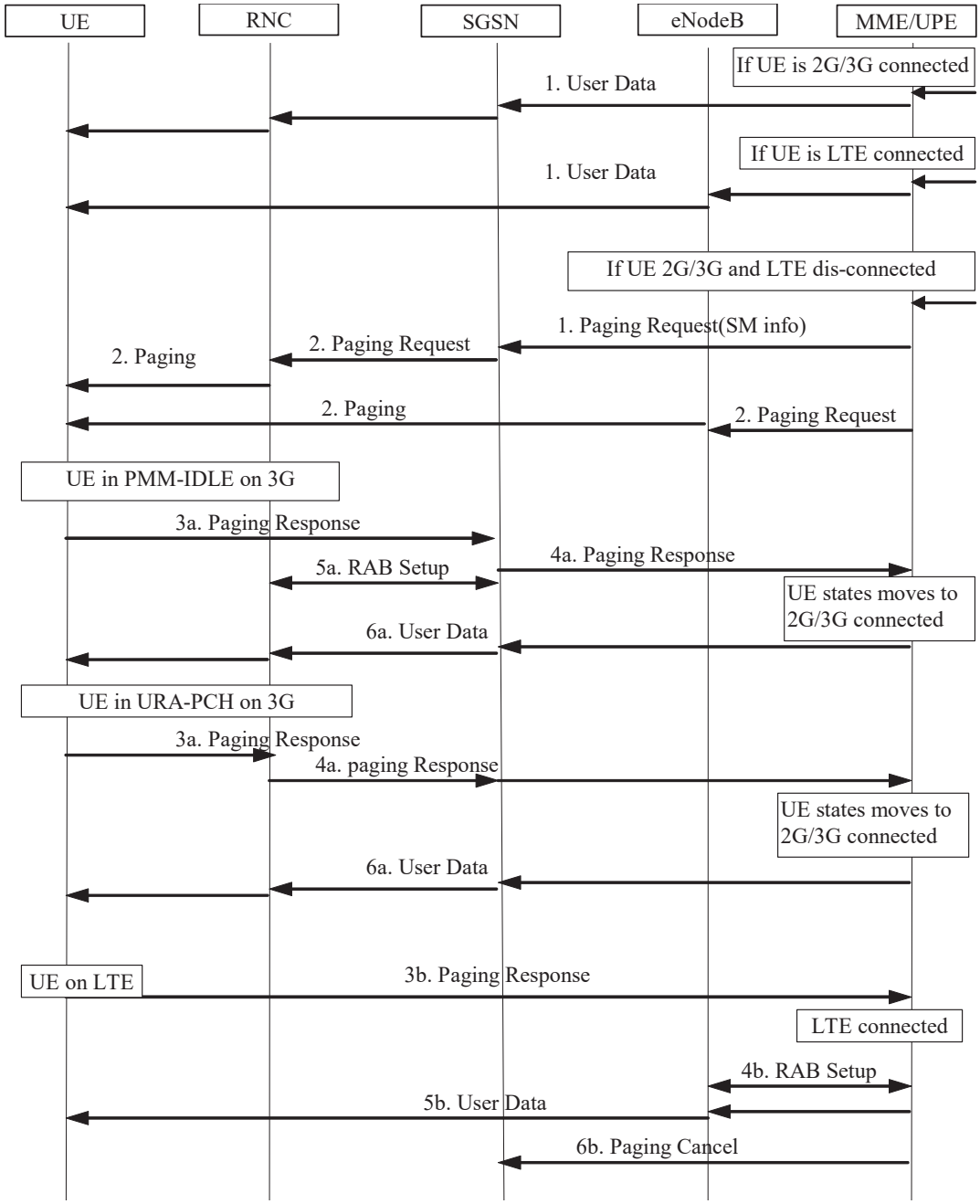

Note: any assumption on the collocation of entities cannot be derived from this figure. Implementations separating IASA and MME/UPE are not excluded.

Note: in step 1/4a, it is FFS whether the existing SM message can be used in stead of a new message.

Resmed Corp. - Ex. 1037
Page 137

Note: step 4a is dependent on whether exists only if it is agreed that URA_PCH state should be supported for signalling free (see RP-050893 and report of RAN plenary #30). The interaction of this approach with 2G Ready to Standby state transitions is FFS.

This proposal implies RNC-MME/UPE signalling each time the UE changes to URA-PCH state. This could be avoided if the UPE duplicates and sends duplicated data to the SGSN when UE is in PMM-CONNECTED state. The RNC receiving DL data while the UE is in URA-PCH should then signal the UE state to MME/UPE (via SGSN) so that UPE stops sending data and starts parallel paging with MME.

When downlink data arrive at MME/UPE, the MME/UPE starts paging in the TA of the Evolved RAN and the MME/UPE requests the SGSN to page the UE. The SGSN paging is triggered by a MME/UPE message. (It is FFS whether further enhancement is needed to allow the UPE to provide the SGSN with up-to-date PDP context and security information at that stage). When the UE responds to the MME/UPE, data are sent by the MME/UPE to the UE. When the UE responds to the SGSN, the SGSN's response establishes the data path(s) between MME/UPE and SGSN and data are sent by the MME/UPE via the SGSN to the UE.

D.3.6 SGSN (respectively MME) change

If the UE arrives under a new SGSN (respectively MME), the new SGSN gets MM and SM information from MME (respectively SGSN), like for an inter-SGSN RAU procedure. In order to allow the new SGSN (respectively MME) to identify the old node the UE was previously attached to, the UE provides a pair of access type identifiers: 2G/3G identifiers (old TMSI and old S-TMSI), and SAE ones (old RAI and old Tai), with an indication of the latest one. The new SGSN (respectively MME) retrieves MM/SM context information from the latest node the UE was attached to. It is FFS whether CRN mechanisms are used. In this case the new SGSN retrieves MM/SM context information from the old SGSN and may retrieve contexts from MME in case of the CRN mismatch.

The new SGSN (respectively MME) registers to the HLR.

Registration with the HSS allows subscription changes to be sent to the current active node (SGSN or MME).). It is FFS how for the new active node to retrieve the changed subscription when the UE changes the RAT.

To save process time, it is FFS whether Cancel Location sent by the HLR should not remove MM/SM information so that MME keeps UE context information when UE is under SGSN coverage for further usage.

Resmed Corp. - Ex. 1037
Page 138

D.3.7 re-authentication when UE camped within ERA

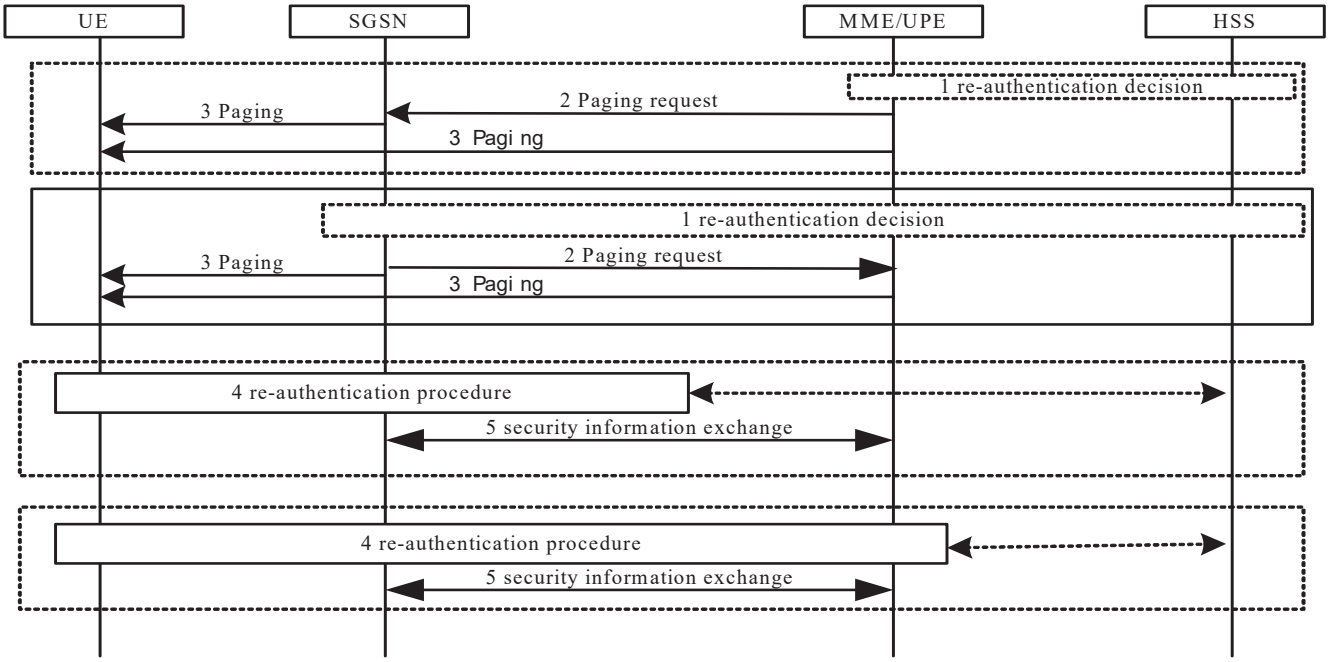

It is FFS whether and when the network triggers a standalone re-authentication or whether re-authentication is combined with other procedures, e.g. with periodic updates.

When MME (respectively SGSN) initiates re-authentication procedure, MME/UPE (respectively SGSN) starts paging the UE in the TA (respectively RA) of the Evolved RAN (respectively UTRA) and the MME/UPE (respectively SGSN) requests the SGSN (respectively MME/UPE) to page the UE. The SGSN (respectively MME/UPE) paging is triggered by a MME/UPE (respectively SGSN) message. The access node which response the paging response shall carry out the mutual re-authentication procedure with the UE, and exchange security information with the other node to synchronize on the usage of Authentication vectors.

For the UE initiates re-authentication procedure, the current access node shall carry out the mutual authentication with the UE, and exchange security information with the other node to synchronize on the usage of Authentication vectors.

D.4 Potential mechanisms for context retrieval

This clause introduces several alternative mechanisms for context retrieval, to be used as part of alternative potential solutions described in clause D.2.

D.4.1 Fully synchronous mechanism

Fully synchronous mechanism means whenever MME/SGSN changes relative contexts (MM/SM information), the MME/SGSN pushes them to the other registered node of the UE (e.g. SGSN/MME). So before the UE accesses the network, both RATs nodes have the latest information. There’s no need for the access node to retrieve the contexts during the UE's access procedure.

D.4.2 MME as master, SGSN as slave

The MME always has the latest information, which means that the SGSN would push the contexts to the MME when the SGSN updates the contexts as an access node, but the MME won’t push contexts to the SGSN when the MME

Resmed Corp. - Ex. 1037
Page 139

updates the contexts. And when the UE accesses LTE, the MME don't retrieve contexts from the SGSN, while the SGSN retrieves contexts from the MME if the UE arrives under 2G/3G.

D.4.3 Coordination between MME and SGSN

MME has up-to-date contexts when UE is under LTE coverage; SGSN has up-to-date contexts when the UE is under 2G/3G coverage. The MME retrieves contexts from the SGSN when the UE arrives under LTE coverage and the SGSN retrieves contexts from the MME when the UE arrives under 2G/3G coverage. There is no pushing contexts procedure compared with the above two approaches.

D.4.4 Retrieval context from the last access node

When the UE arrives under a new node, the new node retrieves information from previous node since the last access node always has the latest contexts. The approach also doesn't need to push contexts. Compared with mechanism described in D.4.3 (the coordination approach), there is no need to retrieve contexts from other node in case the access node is the same as the node immediately prior to the last access node. The approach needs the UE indicate the last access information at access procedure.

D.4.5 MME as master, SGSN as slave, plus CRN mechanism

Whenever the SGSN changes UE contexts, the CRN is updated in the SGSN and synchronized to the MME and the UE. When the UE accesses 2G/3G, the UE sends the CRN to the SGSN. Only if the SGSN detects the CRN mismatch, the SGSN will pull the contexts from the MME. As a result, there is no need for the SGSN to pull contexts from the MME if the SGSN already has the up-to-date contexts (for example, the MME did not update the contexts or the UE continue to access the SGSN)

D.4.6 Coordination between MME and SGSN, plus CRN mechanism

If the contexts are changed, the SGSN updates the CRN and synchronizes it to the UE. If the UE then accesses to the MME, it will send the CRN to the MME. In case the MME detects the CRN mismatch the one stored in it for the UE, it will pull contexts from the SGSN and update its CRN as the CRN the UE sent. In case the CRN kept in the MME matches the CRN the UE sent, the MME doesn't need to pull contexts from the SGSN. If the UE move from SAE network to 2G/3G network the procedure is vice versa.

D.4.7 Retrieval context from the last access node, plus CRN mechanism

The CRN mechanism is used like in the approach D.4.6. When the UE accesses the 2G/3G network, the UE indicates the CRN to the SGSN. In case the SGSN detects the CRN mismatched, the SGSN will pull UE contexts from the MME. When the UE move from 2G/3G network to SAE network, the context procedure is vice versa. Because the CRN must match if the access node is the last access node, there's no need to bring last access information. So, the approach could be converged into approach D.4.6.

Resmed Corp. - Ex. 1037
Page 140

Annex E: Mobility between pre-SAE/LTE 3GPP and non 3GPP access systems

E.1 General

The intent of this Annex is to study architectural solutions for session continuity and seamless mobility for 3GPP-WLAN Interworking in parallel to the study of the evolved system. The goal is to develop a feasible architectural solution for session continuity and seamless mobility for 3GPP-WLAN Interworking, which allows evolution towards the SAE architecture for mobility between access systems using 3GPP and non-3GPP radio.

E.2 Description of mobility between pre-SAE/LTE 3GPP and non 3GPP access systems

The term Access System is used here to designate one of the following:

- The GPRS IP access (including both the PS core network and the RAN),
- The WLAN 3GPP IP Access, or
- The WLAN Direct IP Access.

Currently there is no standard means for ensuring session continuity or seamless mobility between these two systems. Whenever the UE moves between the two, any established session will fail and will have to be tunnelled. The purpose of this clause is to study mobility solutions.

E.3 Solutions for mobility between pre-SAE/LTE 3GPP and non 3GPP access systems

E.3.1 Solution A

This clause assumes that Mobile IP is used as mobility protocol for GPRS-WLAN mobility, whereas MOBIKE [6] is used for Ue-PDG Ipsec tunnel relocation within the WLAN 3GPP IP Access. It is assumed that the same solution applies for both session continuity (a.k.a. Scenario 4) and seamless mobility (a.k.a. Scenario 5), depending on the mobile's capability for simultaneous connections.

Note that in the subsequent text we use the traditional MIP terminology i.e. Mobile Node (MN), Foreign Agent (FA) and Home Agent (HA).

It is assumed that Home AAA in HPLMN is in charge of user authentication and authorization.

Figure E.1 is a simplified figure describing how the Diameter application for Mobile Ipv4, RFC 4004 [5], works in conjunction with the Mobile Ipv4 protocol. Depicted is the case where Mobile Ipv4 is used with Foreign Agent Care-of Address (FA-CoA). This requires a FA functionality within the Gateway (PDG or GGSN). The names associated with some interfaces (e.g. Wm+, Wd+, Gi-aaa, Rha-aaa, Gi+, Wi+) are clarified later in the text.

Resmed Corp. - Ex. 1037
Page 141

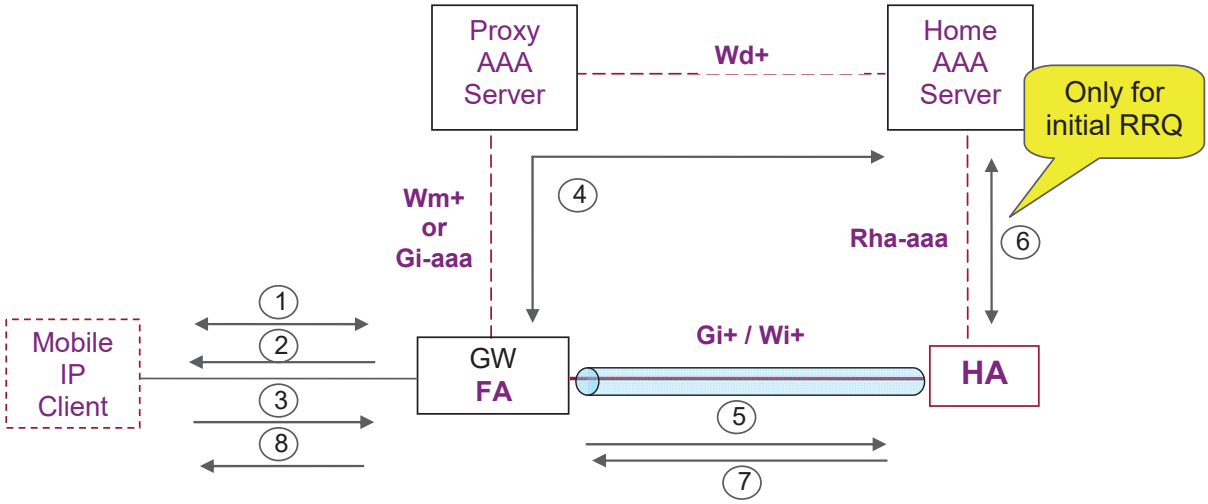

Figure E.1: Use of MIPv4 FA care-of address mode with Diameter application

The following are the subsequent steps described in Figure E.1 (for more details the reader may refer to RFC 4004 [5]):

1) The MN establishes a connection with the GW (i.e. GGSN or PDG);

2) The MIP Foreign Agent (MIP FA) function in the GW sends a FA advertisement;

3) The MN sends a MIPv4 Registration Request (RRQ);

4) The GW interrogates the user's Home AAA server in order to authenticate and authorise the user. In the roaming case, the GW uses the Proxy AAA to contact the user's Home AAA server. The Home AAA server assigns a Home Agent (HA) and provides the address of the assigned HA to the GW.

5) The FA forwards the MIPv4 RRQ to the MIP HA.

6) The HA fetches a pre-shared key for MN-HA authentication. This step is required only at session establishment. Specifically, it is not required for MN-HA authentication when the UE subsequently connects to other Fas.

7-8) The HA accepts the mobile registration by replying with a MIPv4 Registration Response (RRP).

Figure E.2 is a simplified figure describing how the Diameter application for Mobile Ipv4, RFC 4004 [5], works in conjunction with the Mobile Ipv4 protocol when no FA present (co-located care-of address mode). The names associated with some interfaces (e.g. Rha-aaa) are clarified later in the text.

Resmed Corp. - Ex. 1037
Page 142

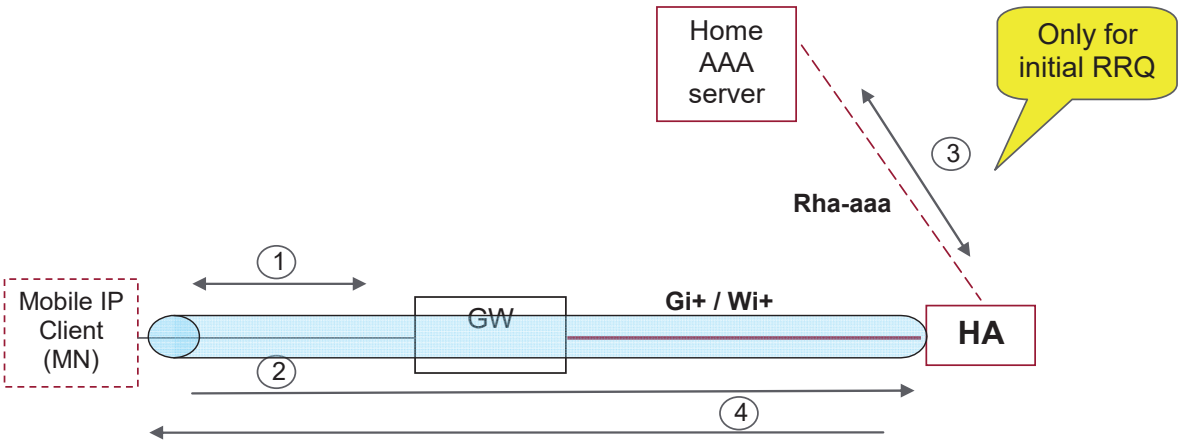

Figure E.2: Use of MIPv4 collocated care-of address mode with Diameter application when no FA is present

The following are the subsequent steps described in Figure E.2 (for more details the reader may refer to RFC 4004 [5]):

1) The MN establishes a connection with a GW (e.g. GGSN or PDG) or is otherwise assigned an IP address from an access network.

2) The MN sends a MIPv4 Registration Request (RRQ) to its HA transparently through the GW. The HA IP address may be discovered e.g. using DNS resolution of a HA FQDN, or through an agent advertisement, if the Home Agent is in the same link as the MN.

3) The HA contacts the AAA server to fetch authentication and keying information for the MN. This step is required at session establishment. Specifically, it is not required for MN-HA authentication when the UE makes subsequent registrations while the lifetime of the MN-HA keys is not due to expire.

4) The HA accepts the mobile registration by replying with a MIPv4 Registration Response (RRP).

Depicted in Figure E.3 is a simplified view on how a Diameter application may work in conjunction with MIPv6. The main difference wrt Ipv4 is the absence of Foreign Agent in the GW.

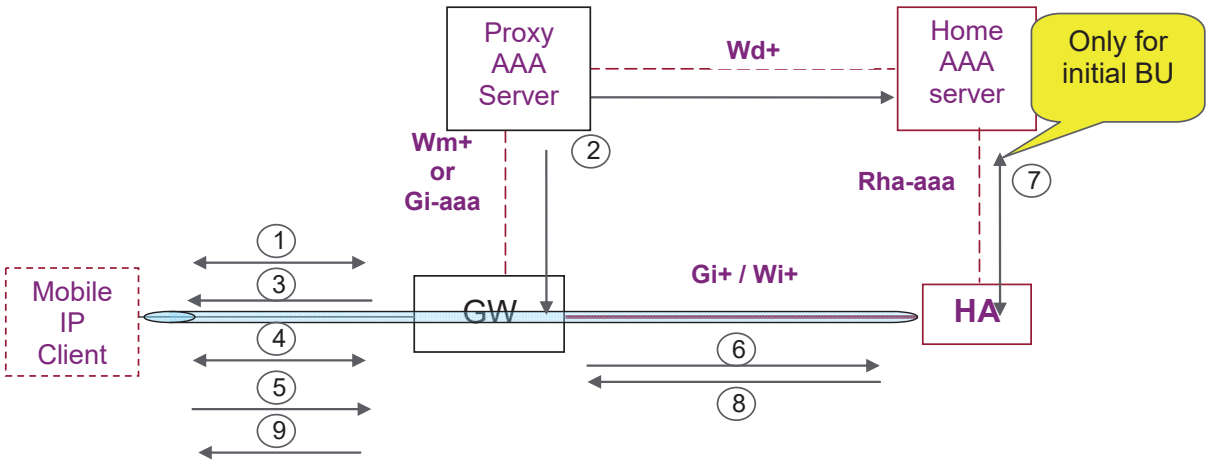

Figure E.3: Use of MIPv6 with Diameter application

The following are the subsequent steps described in Figure E.3:

1) The MN establishes a connection with the GW and begins authentication;

Resmed Corp. - Ex. 1037
Page 143

2) The GW interrogates the user's Home AAA server in order to authenticate and authorise the user. In the roaming case, the GW uses the Proxy AAA to contact the user's Home AAA server. In addition, the Home AAA server provides "MIPv6 bootstrap" information i.e. information allowing the Mobile IP client in the UE to configure itself for MIPv6 service and identify the assigned HA;

3) The GW completes the user authentication;

4) The MN carries out a DHCPv6 procedure for MIPv6 bootstrap;

5-6) The MN sends a Binding Update (BU) to the MIPv6 HA (this is the equivalent of the MIPv4 RRQ);

7) The HA authenticates the user and fetches keying material for subsequent Binding Updates;

8-9) The HA accepts the mobile registration by replying with a Binding Acknowledgement (BA).

The next two figures provide examples on how the MIPv4 and MIPv6 concepts described above can be mapped to scenarios for GPRS-WLAN mobility. The red pipes stand for Ipsec tunnels, whereas the blue pipes represent Mobile IP tunnels.

Depicted in Figure E.4 is the application of Mobile Ipv4 as a solution for GPRS-WLAN mobility. A FA functionality is incorporated in both the GGSN and the PDG, meaning that in this case MIPv4 is used with Foreign Agent Care-of-Address (FA-CoA). The Foreign Agent is not necessary for co-located mode operation of Mobile IP (see Figure E.5).

The "Home AAA" functions which are required for the Diameter MIPv4 application are assumed to be provided by the 3GPP AAA server.

The MIPv4 tunnelling is used only on the Gi+ and Wi+ interfaces i.e. between the HA and the FA located in the GGSN and the PDG, respectively.

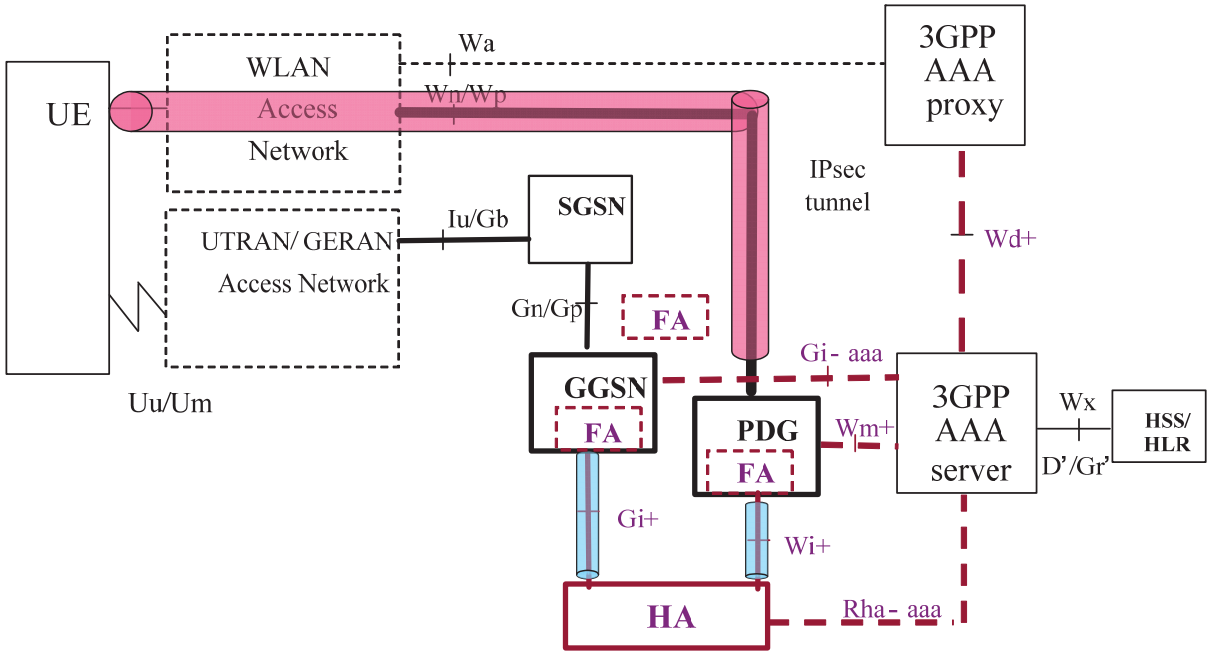

Figure E.4: Use of MIPv4 with FA-CoA for GPRS-WLAN mobility

NOTE 1: In case the HA functionality is collocated with the GGSN, the terminal can be considered to be at home in Mobile IP sense when using the GPRS IP access. The FA functionality in the GGSN becomes redundant in this case.

NOTE 2: In case the GGSN and the PDG are attached to the same IP subnet, the use of MIP is FFS.

NOTE 3: Whether the FA functionality has to be collocated with the GGSN/PDG or whether it can exist as a stand-alone element is FFS.

Resmed Corp. - Ex. 1037
Page 144

The same architecture applies to both Scenario 4 and Scenario 5, the only difference being that in Scenario 5 the UE is assumed to maintain simultaneous connections across the source and target Access System during the transition period.

Depicted in Figure E.5 is the application of Mobile Ipv6 as a solution for inter-system mobility. The same figure also applies to the use of MIPv4 with collocated Care-of-Addresses (co-CoA).

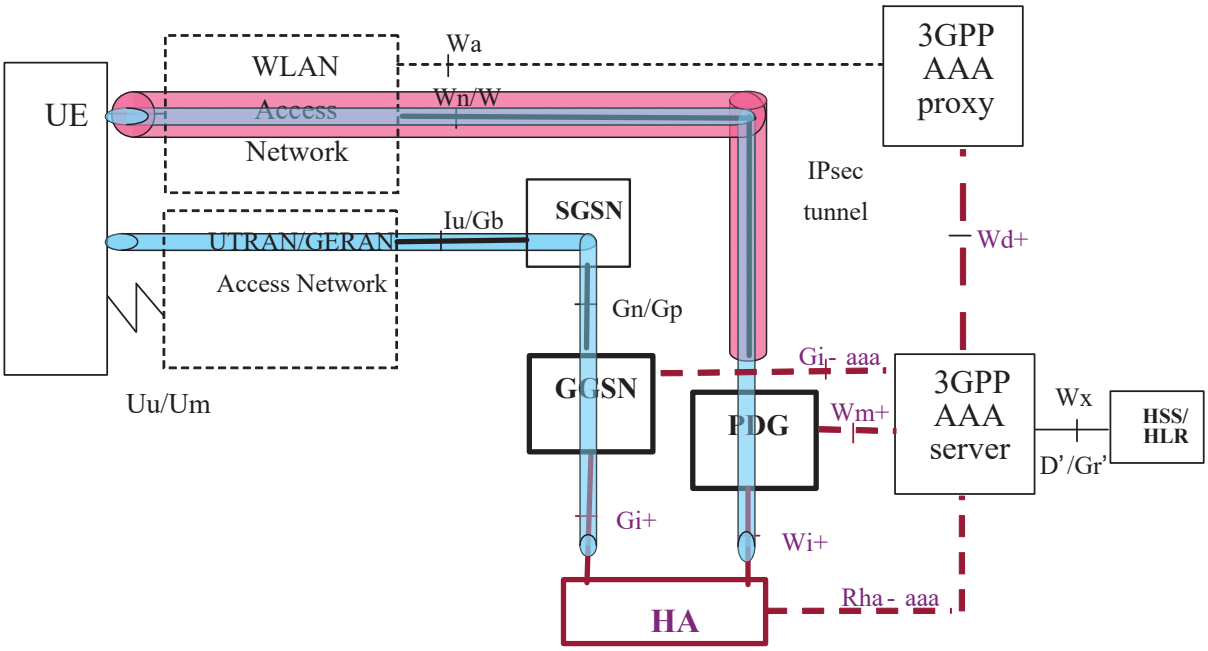

Figure E.5: Use of MIPv6 or MIPv4 with co-CoA for GPRS-WLAN mobility

In either case there is no notion of Foreign Agent in the GGSN or the PDG. MIP tunnelling is used from the HA all the way down to the UE. In case of MIPv6, the MIPv6 "route optimisation" mechanism is used to avoid tunnelling over the radio.

Regarding inter-WLAN mobility, relying on Mobile IP alone may not be sufficient for achieving Scenario 5-like seamless mobility. A possible issue here is the time required for setting up a new Ipsec tunnel when changing the point of WLAN attachment, because, contrary to the inter-system handover, the UE may not be able to initiate a new Ipsec tunnel setup before breaking the previous one. The IETF MOBIKE group is currently working on mechanisms for speeding up this kind of Ipsec tunnel relocation. Figure E.6 clearly shows that Mobile IP does not intervene during the relocation of the Ipsec tunnel. MOBIKE would be used instead.

Resmed Corp. - Ex. 1037
Page 145

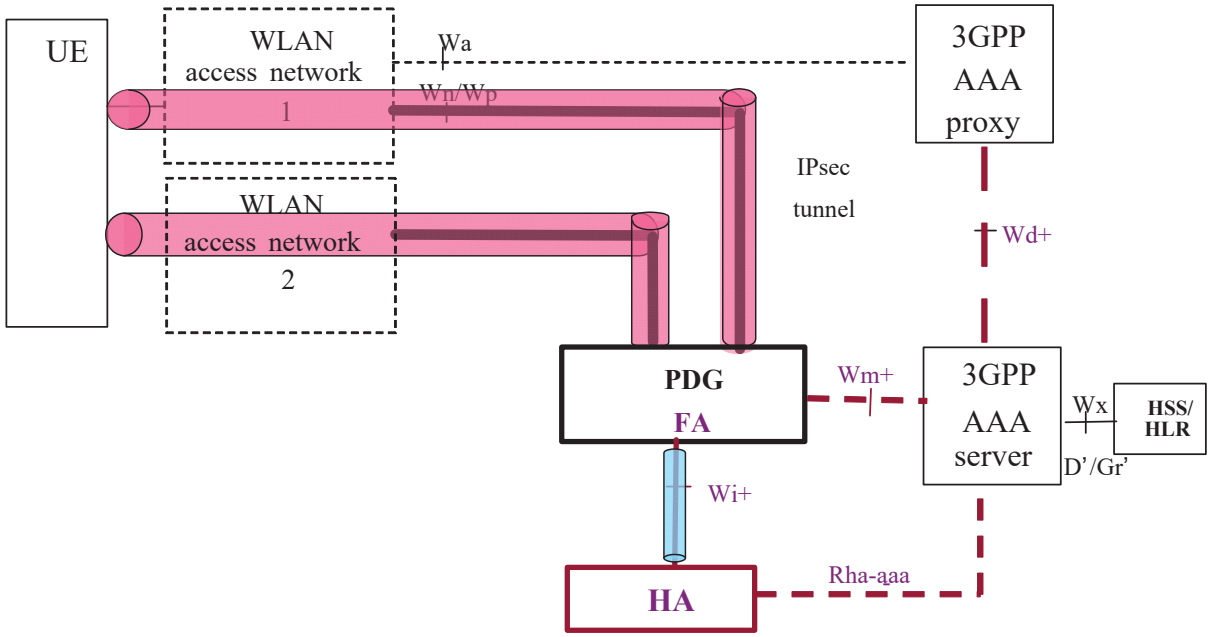

Figure E.6: MOBIKE use for inter-WLAN mobility

E.4 Impact on the baseline CN architecture

E.4.1 Solution A

Depicted in Figure E.7 is the baseline architecture taken from 23.882, from which all IMS specific elements have been removed for simplicity. In addition, a Mobile IP Home Agent (MIP HA) has been added to the figure, as well as a couple of reference points. Listed below are all new or modified reference points, with a description of their role:

- **Gi+/Wi+**: this is the Mobile IP signalling and bearer plane between the Gateway (i.e. GGSN or PDG) and the MIP HA;
- **Wj**; this is the Mobile IP signalling and bearer plane (tunnel) between the UE and the MIP HA, which is used in case of MIPv4 co-located care-of address and MIPv6;
- **Gi-aaa**: this is the AAA part of the Gi interface, which traditionally connects the GGSN to a AAA server which itself is not part of the 3GPP system architecture. Here it is assumed that the Gi-aaa interface connects to the 3GPP AAA server. It is used by the Diameter Mobile IP application, RFC 4004 [5], for dynamic assignment of a MIP HA, as well as during setup of security associations (MN-HA, MN-FA, FA-HA);
- **Wm+/Wd+**: this is respectively an enhancement to the existing Wm and Wd reference points. The additional functionality is similar to the Gi-aaa functionality described above;
- **Rha-aaa**: this is the reference point between the MIP HA and the 3GPP AAA server. Similar to the previous, it is used for dynamic assignment of a MIP HA and during setup of security associations.

The impact on the PCRF is left FFS.

The applicability to WLAN Direct IP Access is FFS.

Resmed Corp. - Ex. 1037
Page 146

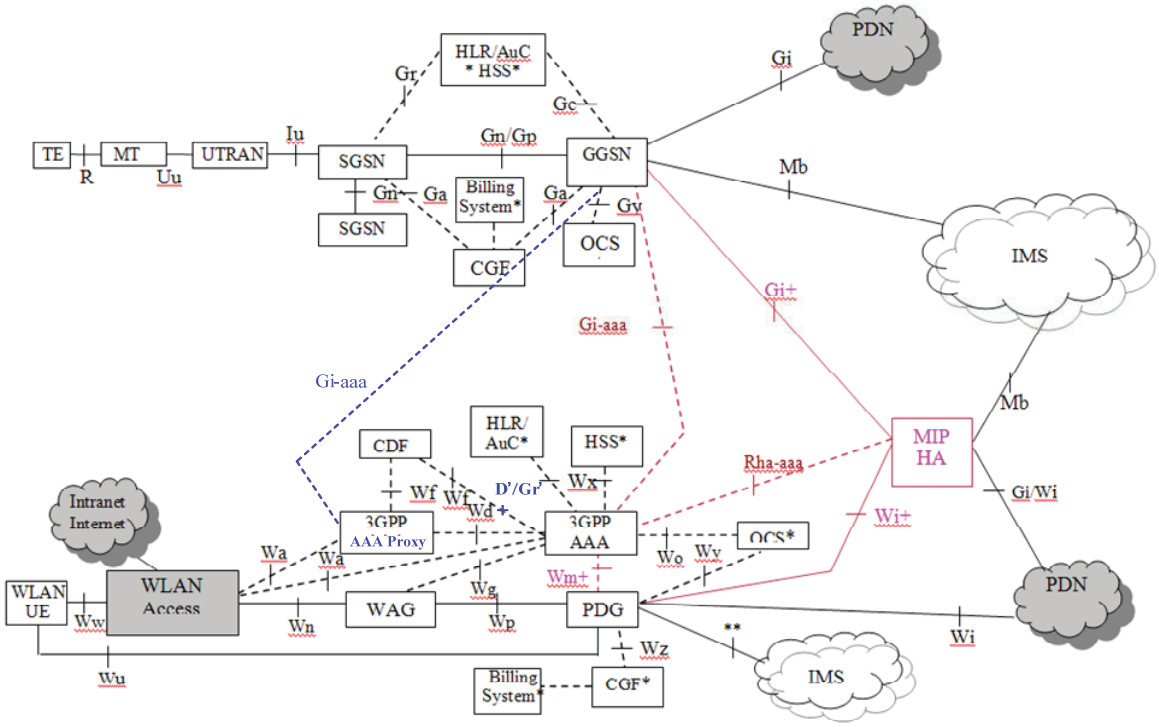

Figure E.7: Impact of Mobile IP on the baseline architecture

E.5 Impact on the baseline RAN architecture

None.

E.6 Impact on terminals used in the existing architecture

E.6.1 Solution A

In order to support GPRS-WLAN mobility with session continuity (i.e. Scenario 4), the terminal must have a Mobile IP client and a MOBIKE client. In order to support seamless mobility (i.e. Scenario 5), the terminal must in addition be capable of simultaneous connections.

Other impacts on the terminal are FFS.

Resmed Corp. - Ex. 1037
Page 147

Annex F: Policy related network Scenarios

F.1 Scenario 1: Inter-system mobility within the home domain

As the user changes between two access systems, its serving MME/UPE may change. All user plane traffic will pass the anchor node(s) in addition to the serving MME/UPE. Depending on the grouping of functions (which is FFS), the anchor nodes may be interpreted as MME/UPE, Inter-AS Anchor, or both.

For a single user, one PCRF node controls the anchor node(s), over an enhanced Gx interface (Gx+). This means that when a user moves between 3GPP cellular accesses and non-3GPP access such as I-WLAN, the PCRF will remain unchanged. Policy enforcement (PEP) and charging functions (TPF) are in the anchor node(s).

It is FFS whether policy enforcement functions are needed in the serving MME/UPE.

NOTE: The single PEP assumption for this scenario may prevent the use of route optimisation for traffic generated in the non-3GPP access system. Whether this is an issue for the non-roaming case is FFS.

F.2 Scenario 2: Roaming with home forwarding/tunnelling of traffic

In this scenario a user moves to an access operated by a different operator than its home operator, i.e. the user is roaming. The access type used in the visited domain may or may not be different from the access type used in the home domain. Traffic is forwarded/tunnelled home from the MME/UPE in the visited domain to the anchor node(s) in the home domain. Policy enforcement (PEP) and charging functions (TPF) are in the anchor node(s).

Since the serving MME/UPE is in the visited domain, QoS support is needed in the MME/UPE. The visited network operator may prefer not to allow another business entity, i.e. the home operator, to have direct control over its MME/UPE and set QoS and charging filters, since this would make it very difficult for the visited operator to take responsibility for the management of its own MME/UPE.

It is FFS whether a PCRF node is needed in the visited domain in order to transfer dynamic AF session information to policy enforcement functions (PEP) in the serving MME/UPE, when there already are both PEP and TPF in the home domain anchor node(s).

If such a roaming interface is defined and used for the transfer of dynamic AF session information (or some translation thereof) to the MME/UPE, it should not make the AF mobility-aware, i.e., the AF should not need to be aware that the user is roaming. This would add complexity into the AF, which is clearly not desired. In addition, the interface should also allow the home network to be involved in e.g. admission control decisions together with the transfer of the AF session information (or some translation thereof).

If it will be decided that the existence of both PEP and TPF in the home domain anchor node(s) is not enough to support the QoS in the visited domain, it is FFS how to translate the dynamic AF session information so that a roaming agreement between the visited and the home domains can be applied to the QoS policies of the AF session in a consistent fashion.

The inter-system mobility in the visited domain may imply a PEP relocation. How policy control works in conjunction with PEP relocation is FFS.

Resmed Corp. - Ex. 1037
Page 148

F.3 Scenario 3: Static roaming agreement

This is a simplified scenario with limited capabilities. It does not provide any PCC features, i.e. it does not use a PCRF to install dynamic policy or charging rules. Such a simplified scenario might be used for e.g., plain best-effort internet access. Basic policy and charging functionality, (e.g., measurement of the total amount of bytes transferred) could be pre-provisioned or provided over a AAA interface between the home and the visited domains.

F.4 Scenario 4: Roaming with route optimisation of traffic in the visited domain, AF in the home domain

This scenario is similar to scenario 2, with the difference that traffic is not forwarded/tunnelled to the home domain; instead it is routed optimally between the visited domain and the peer node. The application function, however, is still in the home domain; or alternatively it is outside the home domain (e.g. at a third-party) but is connected to the PCRF in the home domain.

The traffic passes through the visited network and not the home network, but it should be under the control of the home operator. Bi-directional route optimization is needed in most cases.

Due to the fact that no anchor node is involved in handling of the user plane traffic in the home network, policy enforcement has to be implemented in the visited domain. It is FFS whether PCRF nodes need to be involved in the home and visited domains in order to transfer dynamic AF session information for policy enforcement in the MME/UPE. It is FFS whether the roaming agreement required between the home and the visited domains is feasible. In particular, it is FFS how the roaming agreements for charging can be made simpler, e.g. if charging is based on session signalling, and media is zero-charged.

The use of route optimisation may require updates to the PEP configuration (e.g. if the bearer route can switch between optimised and non-optimised mode during the lifetime of a session). How this is achieved is FFS.

F.5 Scenario 5: Roaming with local breakout of traffic in the visited domain, AF in the visited domain

In this scenario, the AF is in the visited domain, or at a third party but connected directly to the visited PCRF. Bi-directional route optimization is expected in this scenario. In this case policy control takes place fully in the visited network, without direct signalling from the home network. The way policy rules are provided by the PCRF in the visited domain has to be settled in the roaming agreement with the home domain. It is FFS whether an increasing reliance on the roaming agreement to provide control in the visited domain is feasible, and what modifications would be needed to the roaming agreements.

In particular, it is FFS how charging is handled in the visited network.

It is FFS whether the home network AF takes part in the service provisioning.

F.6 Scenario 6: Roaming with local breakout of some traffic in the visited domain, forwarding/tunnelling other traffic to home network

This scenario is a combination of scenario 2 and scenario 4/5. For some services, e.g. voice services and streaming services, local breakout for user plane traffic has advantages in performance and bandwidth saving. However, for other services, it is reasonable that the home operator would like to have more control and forwarding/tunnelling is expected.

Resmed Corp. - Ex. 1037
Page 149

Annex G:
Examples of Operator-Controlled Services

G.1 Operator-Controlled Rx Services

An operator has a specific charging rate for user-user VoIP traffic over the IMS. A PCC rule is established for this service data flow. The filter information to identify the specific service data flow for the user-user traffic is provided by the P-CSCF.

An operator is implementing UICC based authentication mechanisms for HTTP based services utilizing the GAA Framework as defined in TR 33.919 [11] by e.g. using the Authentication Proxy. The Authentication Proxy may appear as an AF and provide information to the PCRF for the purpose of selecting an appropriate PCC Rule.

G.2 Operator-Controlled Gx-only Services

A network server provides an FTP service. The FTP server supports both the active (separate ports for control and data) and passive modes of operation. A PCC rule is configured for the service data flows associated with the FTP server for the user. The PCC rule uses a filter specification for the uplink that identifies packets sent to port 20 or 21 of the IP address of the server, and the origination information is wildcarded. In the downlink direction, the filter specification identifies packets sent from port 20 or 21 of the IP address of the server.

A network server provides a "web" service. A PCC rule is configured for the service data flows associated with the HTTP server for the user. The PCC rule uses a filter specification for the uplink that identifies packets sent to port 80 of the IP address of the server, and the origination information is wildcarded. In the downlink direction, the filter specification identifies packets sent from port 80 of the IP address of the server.

The same server also provides a WAP service. The server has multiple IP addresses, and the IP address of the WAP server is different from the IP address of the web server. The PCC rule uses the same filter specification as for the web server, except the IP address is different.

An operator offers a zero rating for network provided DNS service. A PCC rule is established setting all DNS traffic to/from the operators DNS servers as offline charged. The data flow filter identifies the DNS port number, and the source/destination address within the subnet range allocated to the operators network nodes.

For the IMS signalling traffic, a PCC rule may be configured, which includes a charging key for zero rating and the authorised QoS parameters. The data flow filter identifies the P-CSCF source/destination address within the subnet range allocated to the IMS nodes.

Resmed Corp. - Ex. 1037
Page 150

Annex H: Signalling charts for combined or separated MME and UPE

This Annex presents information flows of SAE procedures that demonstrate on a high level the differences between alternative function allocation to MME and UPE and whether the MME and UPE are grouped or separated with an open interface.

Editor's note: These information flows are work-in-progress and details and principles need to be clarified for each alternative for performing the final comparison and decision.

The information flows presented here only serve as illustrations of the principal differences between the proposed alternatives to support the comparison and selection of specific functional grouping and allocation of functions to functional entities. The information flows need to provide sufficient level of details to enable identification of main differences and thereby identifying the questions that need to be answered. It is not intended to develop the final information flows in this annex.

These draft information flows are shown for the following alternatives:

A. Combined MME/UPE.

B. Separate MME and UPE with control ignallin mostly via the MME, and session and context management in MME.

C. Separate MME and UPE with control ignallin via the MME or the UPE, and session and context management only in UPE.

For alternative A, the flows are adopted from the related key issue solution descriptions of this document where the MME/UPE is shown as a combined entity. Therefore they may lack details and may not be completely according to the views of the companies supporting alternative A.

For alternative B and C is also the functional allocation shown.

The following non-exhaustive list of procedures are described, and other procedures can be added later on:

1. Attach including default bearer handling

2. TA Update without MME or UPE change
   Note: Procedure has not been proposed for alternative A.

3. Inter eNB Handover in LTE_ACTIVE mode (intra MME and intra UPE)
   Note: Various other procedures have been proposed where the MME and/or UPE are also relocated, but they are not shown here in order to simplify the discussions.

4. Inter 3GPP Handover between pre-SAE/LTE and SAE/LTE accesses in LTE_ACTIVE mode
   Note: Procedures have not been proposed for alternatives B and C. Several procedures have been proposed for alternative A.

5. Paging and Service Request

6. Establishment of Dedicated Bearers
   Note: Only the main preferred ignallin chart is shown for each alternative, although further procedures may also be supported.

7. Inter MME and/or inter UPE change, including support for service continuity
   Note: This procedure addresses an architecture requirement.

8. Authentication/ Re-Authentication

Lawful interception procedures may also be different for the different alternatives, due to the need to coordinate between the MME and the UPE in alternatives B and C. The details are FFS and are in the scope of the SA3 LI.

Resmed Corp. - Ex. 1037
Page 151

Note: The flows in this annex are mainly to show the differences between alternatives and can be optimized further.

Editor's note: it is FFS in the following flows if IASA and UPE are collocated or not.

Editor's note: Handovers are assumed to be Backward Handovers.

Editor's note: Data Forwarding as means to minimize loss of data is indicative only. Other approaches may be used following agreed assumption in the future.

H.1 Alternative B and C architecture scenarios and functional allocation

The functional allocation and reference point impact is shown below for the roaming and non-roaming scenarios, focusing on the MME/UPE split according to alternative B and alternative C.

H.1.1 MME and UPE functional allocation

	Alternative B		Alternative C	
Grouping: **EPC Function:**	**MME**	**UPE**	**MME**	**UPE**
IP access service enabling functions				
Packet routing and forwarding		X		X
Gateway functionality to external PDNs				
PCEF				
Collection of Charging Information				
Inter-eNodeB Anchor for user plane		X		X
Anchor for inter-3GPP AS mobility				
Anchor for 3GPP and non-3GPP mobility				
IDLE UE DL data termination		X		X
Paging initiation (send page message to eNode Bs)	X		X	
IP Header compression		X		X
Ciphering termination for user plane traffic		X		X
SAE Bearer Management	X			X
Lawful interception of user plane traffic				
Ciphering/integrity termination for signaling	X		X	
Lawful interception of signaling traffic	X			X
CP function for inter-3GPP AS mobility	X		X	
UE CP context management/storage	X		X	
UE UP context management/storage		X		X
Temporary user ID management/storage	X		X	
Mobility management	X		X	
Authentication, authorization, etc.	X		X	

Note1: X indicates allocation, and does not mean that the function is always used in the entity.

Table H.1: Allocation of Evolved Packet Core functions to MME and UPE

H.1.2 Reference point impact from MME/UPE split

One new interface, S11, have been identified due to the MME/UPE split. S10 between MMEs is also identified, but is regarded as needed regardless of MME/UPE split.

Resmed Corp. - Ex. 1037
Page 152

S11: *A new interface as a consequence of the MME-UPE split. Any MME-UPE split would require this interface.*

H.2 Attach including default bearer handling

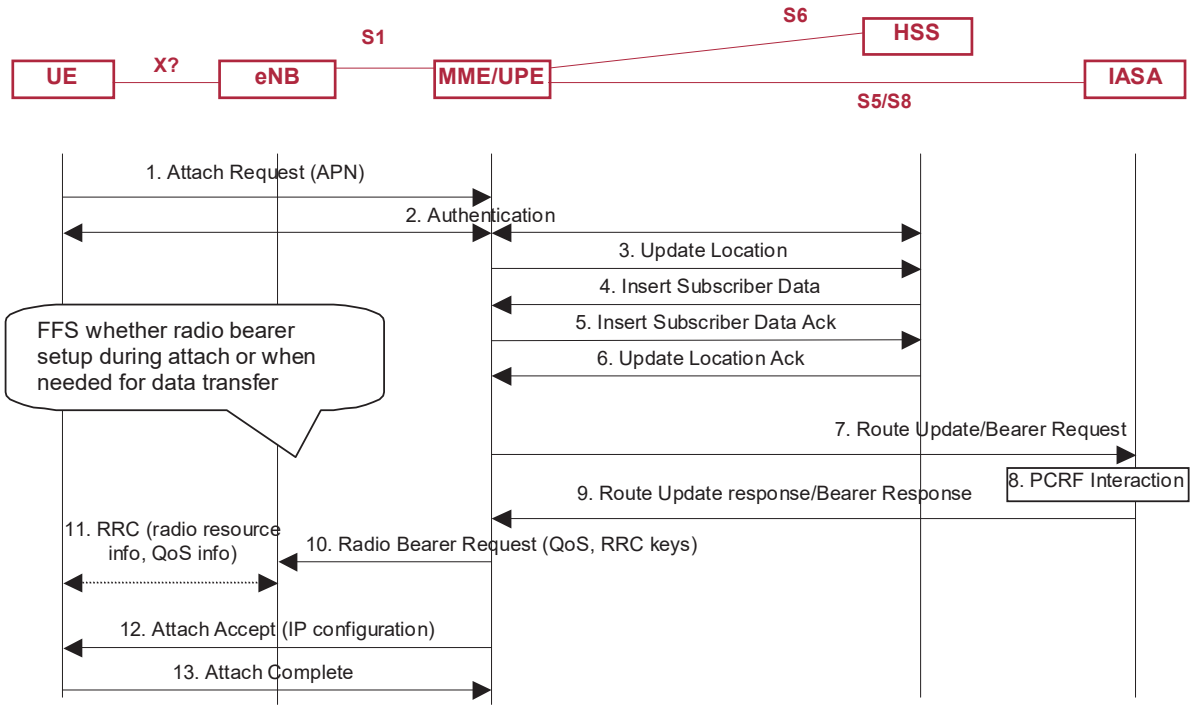

Figure H.2.1: Alternative A

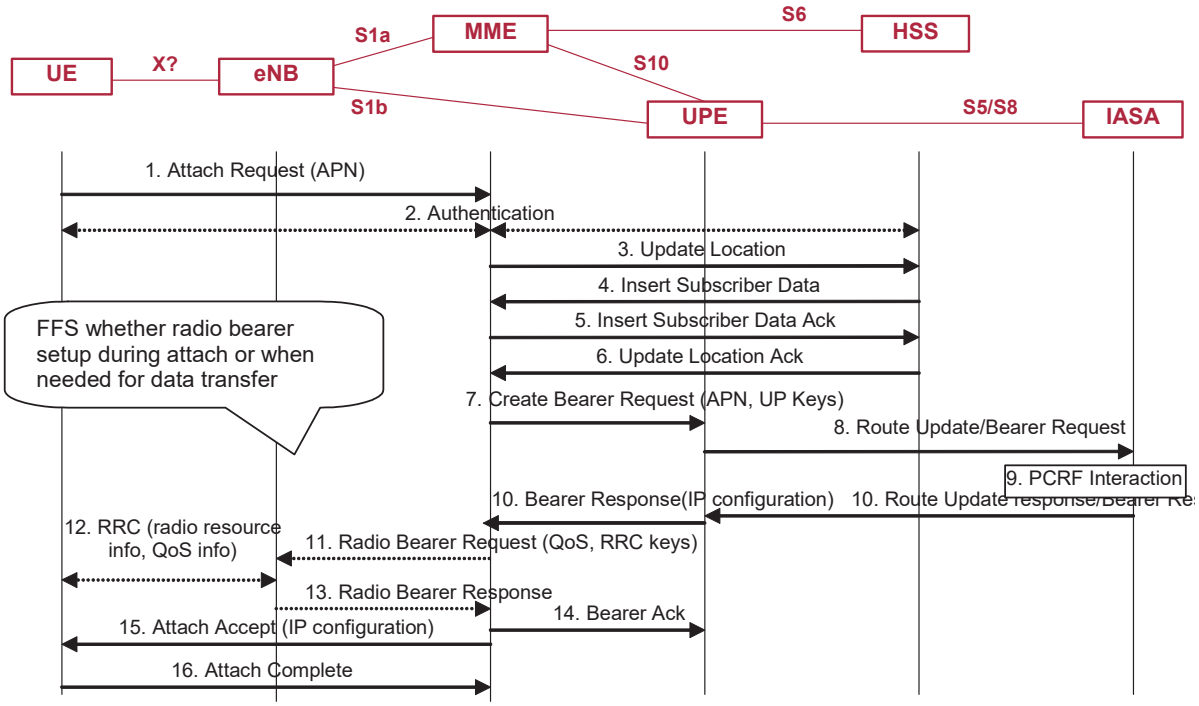

Resmed Corp. - Ex. 1037
Page 153

Note: Step 1 Attach request can involve indication of old temporary ID with context request and response from old MME. Subscriber data transactions with HSS can be combined with location update messages in steps 3 and 6. The default bearer can be set up in IASA directly by the MME in steps 8 and 10 with update of UPE tunnel endpoint also provided by the MME. The NAS ciphering algorithm can be negotiated during Authentication procedure, the UP ciphering algorithm can be negotiated during bearer establishment procedure. The details of the UP ciphering algorithm negotiation are FFS.

Figure H.2.2: Alternative B

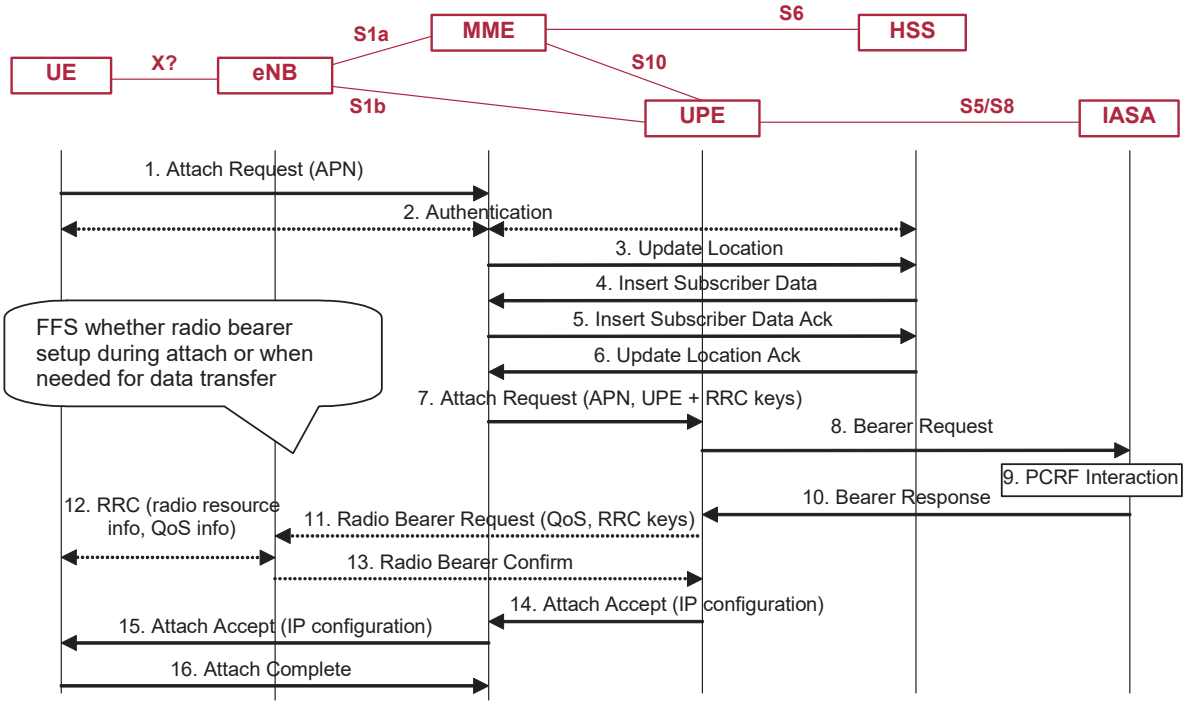

Note: The NAS ciphering algorithm can be negotiated during Authentication procedure, the UP ciphering algorithm can be negotiated during bearer establishment procedure. The details of the UP ciphering algorithm negotiation are FFS.

Figure H.2.3: Alternative C

H.3 TA Update without MME or UPE change

TBD

Figure H.3.1: Alternative A

Resmed Corp. - Ex. 1037
Page 154

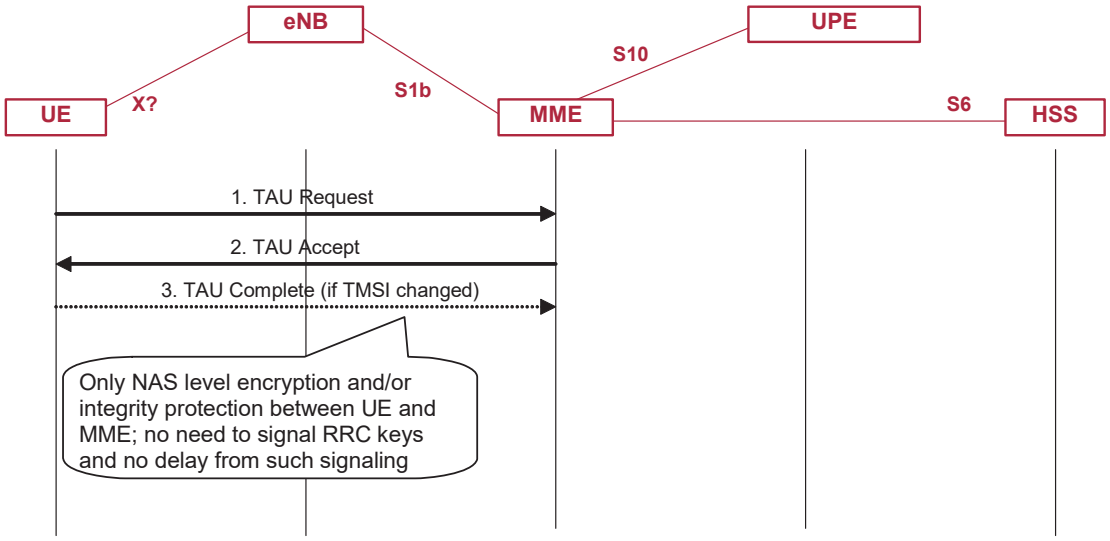

Figure H.3.2: Alternative B

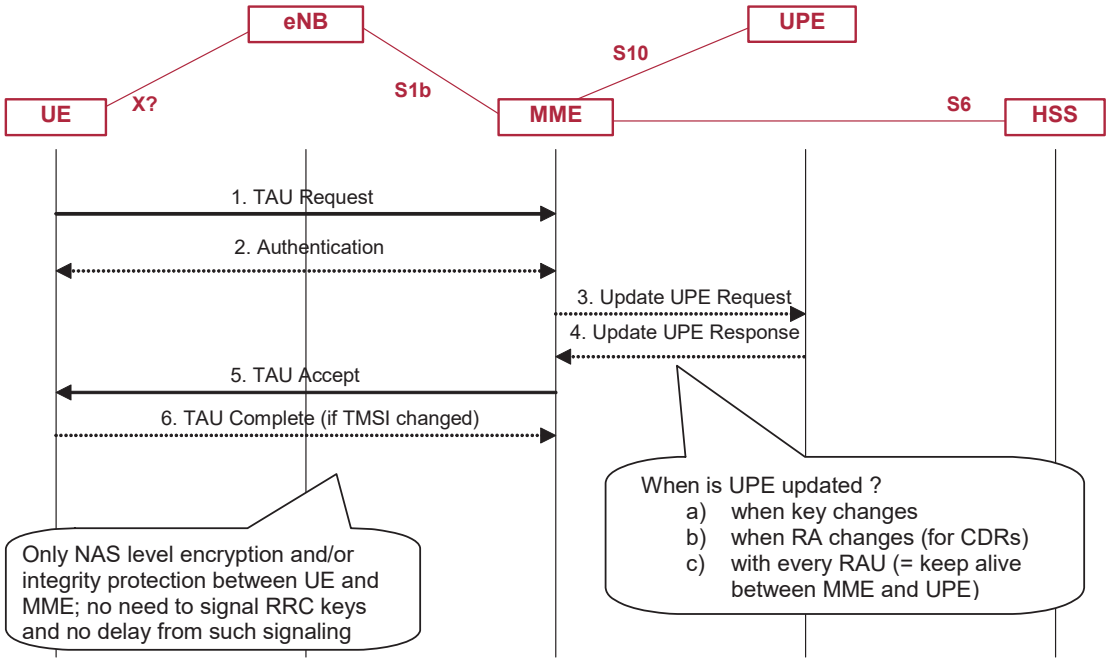

Figure H.3.3: Alternative C

Resmed Corp. - Ex. 1037
Page 155

H.4 Inter eNB Handover in LTE_ACTIVE mode (intra MME and intra UPE)

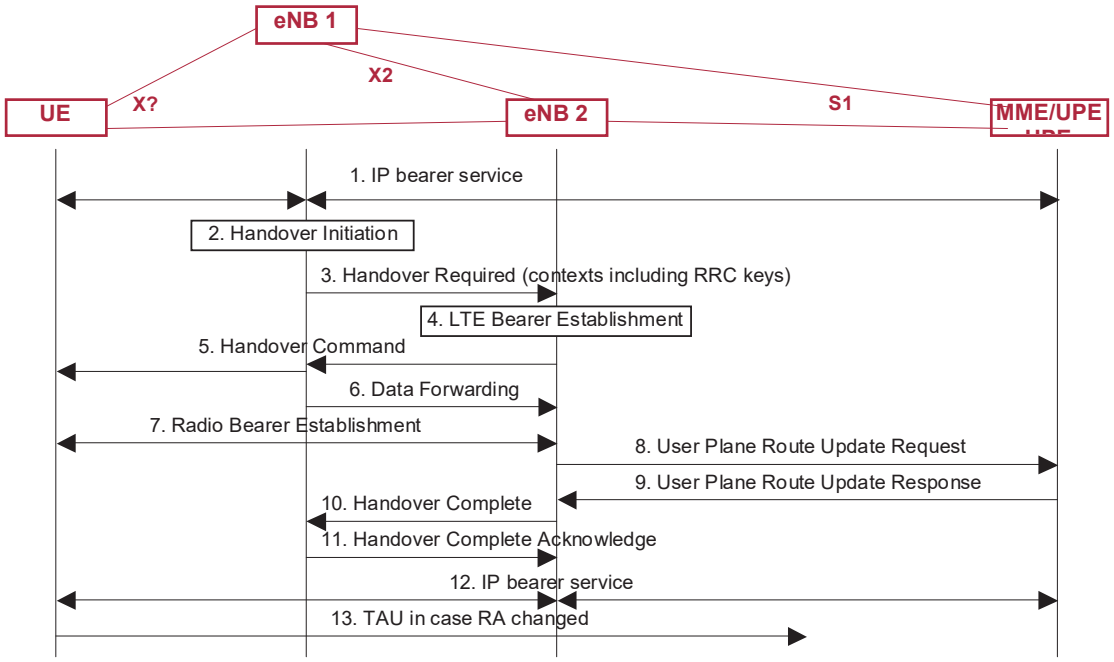

Figure H.4.1: Alternative A

Resmed Corp. - Ex. 1037
Page 156

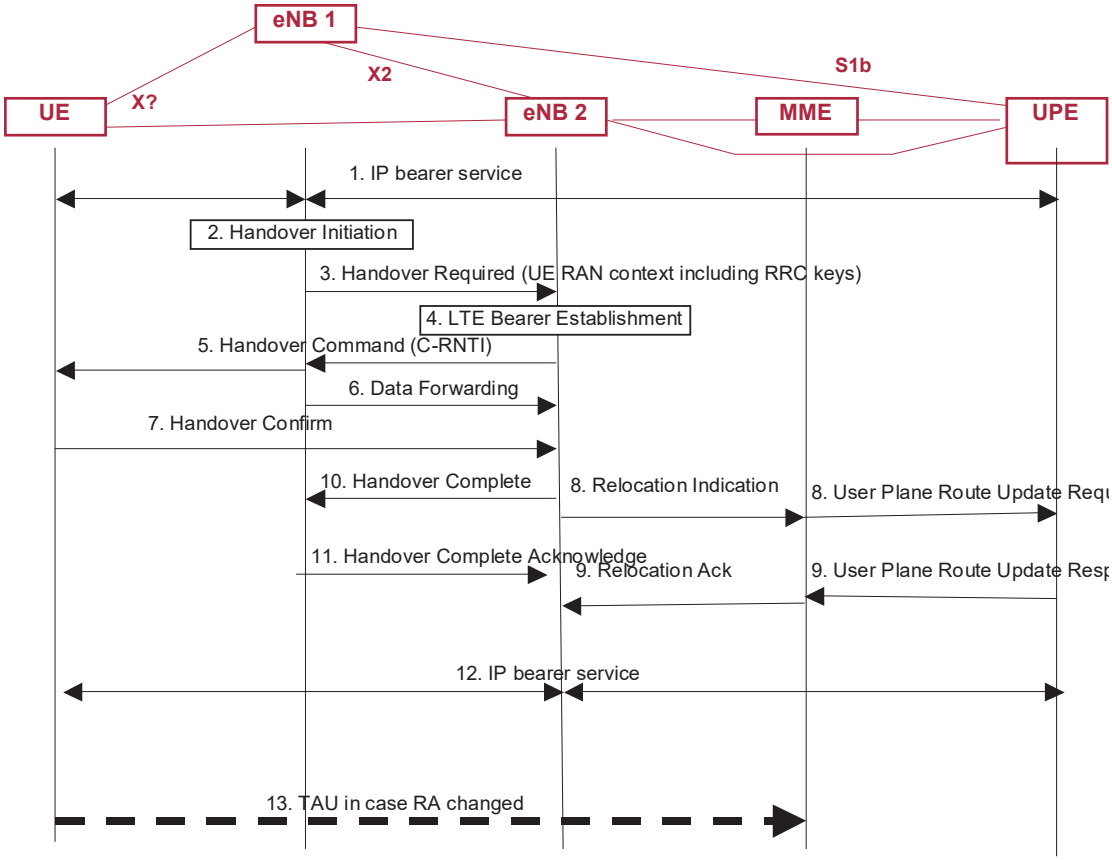

Note: User plane route update in steps 8 and 9 can be done by updating the user plane route directly between the eNB2 and UPE instead of via the MME, with notifications sent to the MME and acknowledgement sent to eNB2 by the MME.

Figure H.4.2: Alternative B

Resmed Corp. - Ex. 1037
Page 157

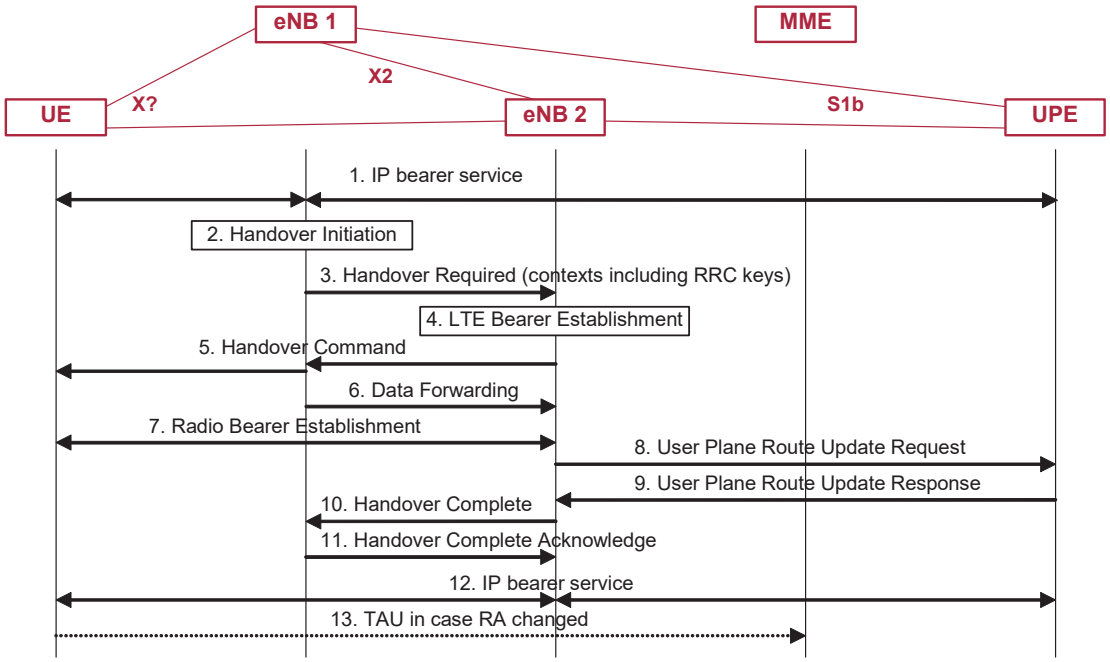

Figure H.4.3: Alternative C

Resmed Corp. - Ex. 1037
Page 158

H.5 Inter 3GPP Handover between pre-SAE/LTE and SAE/LTE accesses in LTE_ACTIVE mode

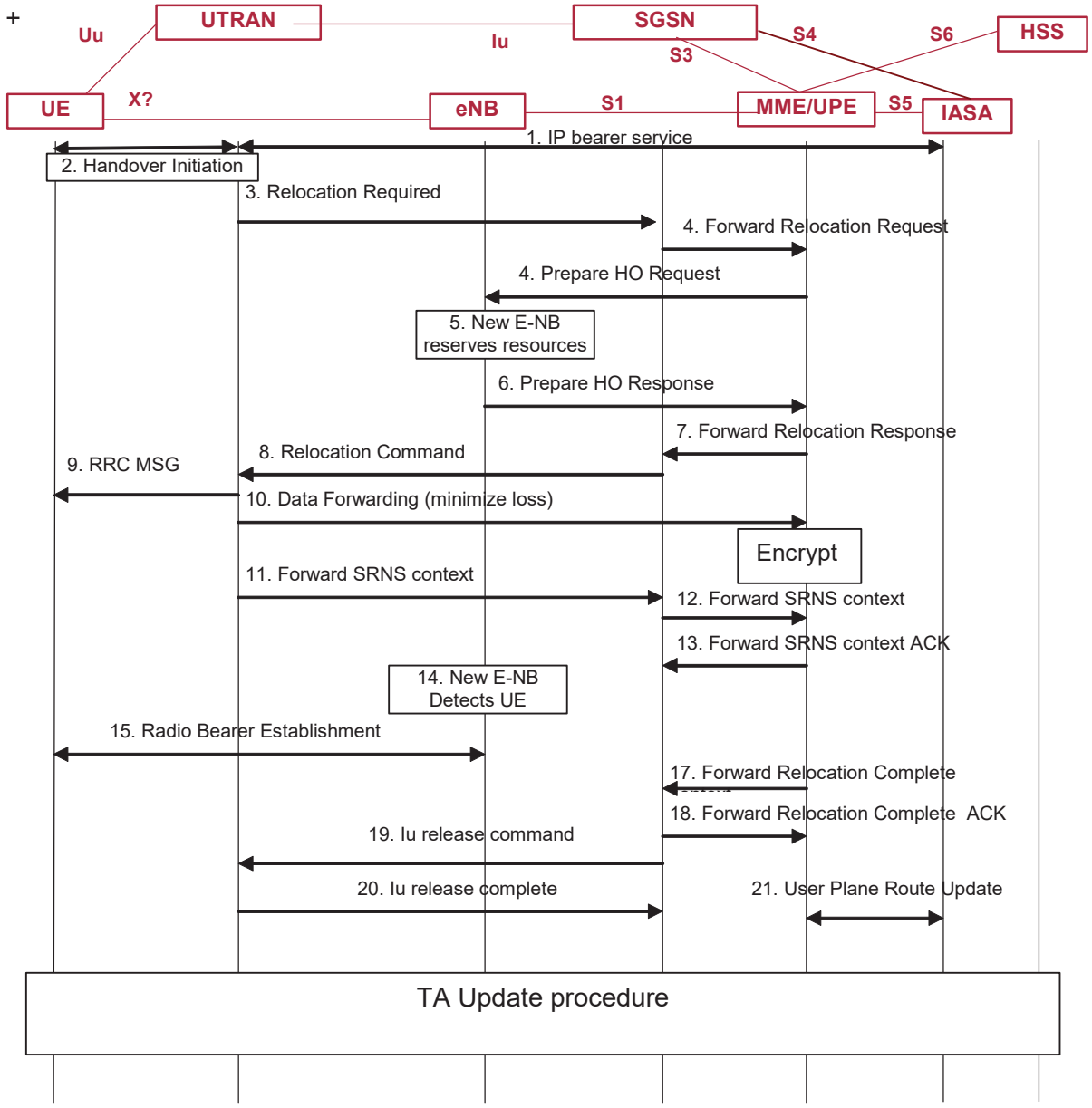

Figure H.5.1: Alternative A

TBD

Figure H.5.2: Alternative B

TBD

Figure H.5.3: Alternative C

Resmed Corp. - Ex. 1037
Page 159

H.6 Paging and Service Request

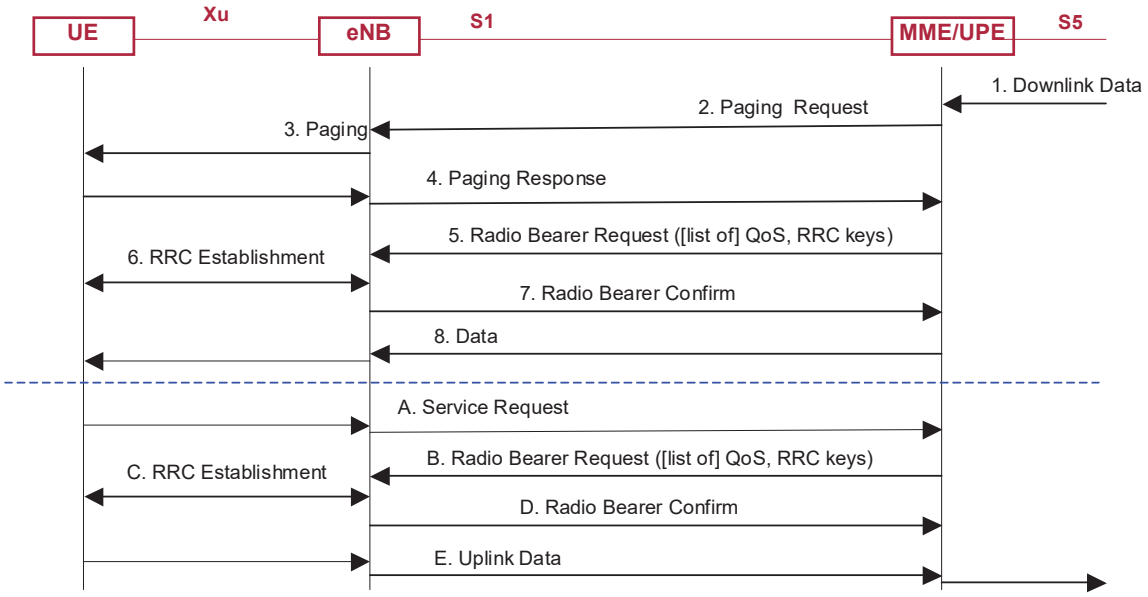

Figure H.6.1: Alternative A

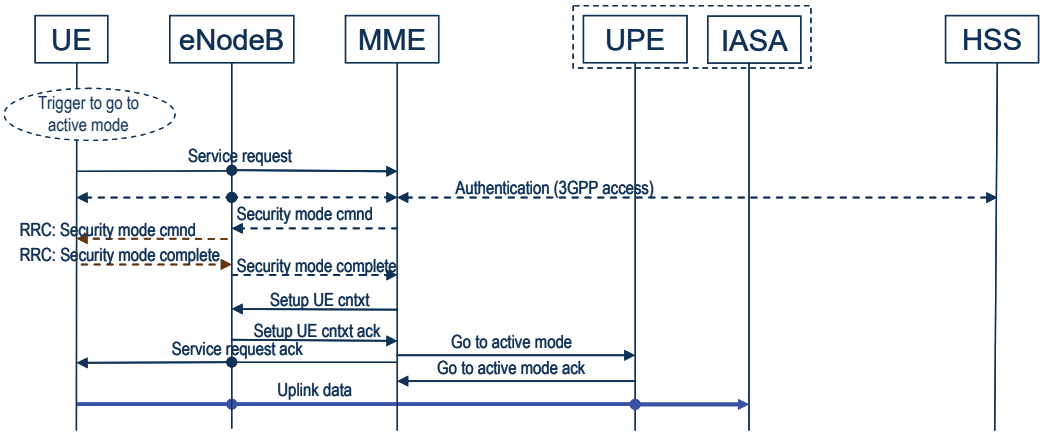

Figure H.6.2-1: Alternative B, service request

Resmed Corp. - Ex. 1037
Page 160

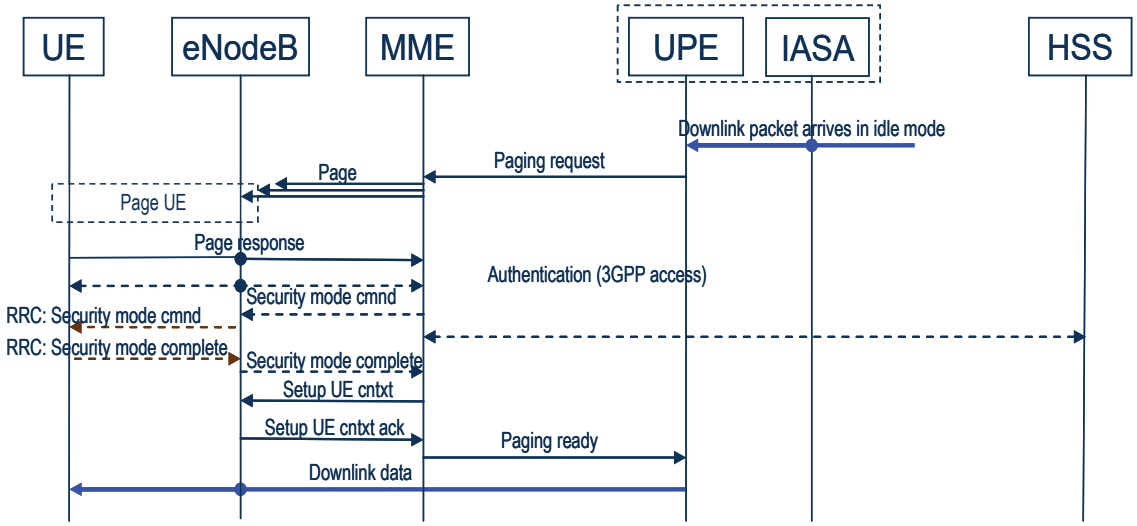

Figure H.6.2-2: Alternative B, paging

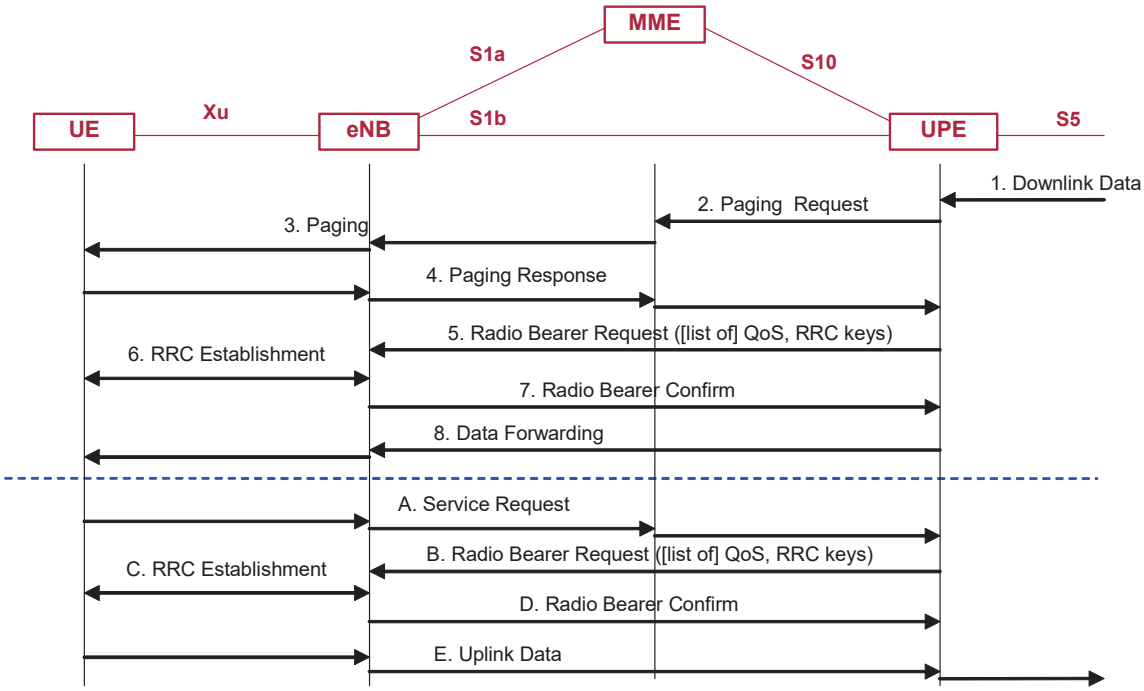

Figure H.6.3: Alternative C

H.7 PCRF triggered establishment of Dedicated Bearers

Editor's note: The flows may be changed once the implied aspects on QoS signaling are agreed within the scope of the discussion on how QoS and bearers are set up.

Resmed Corp. - Ex. 1037
Page 161

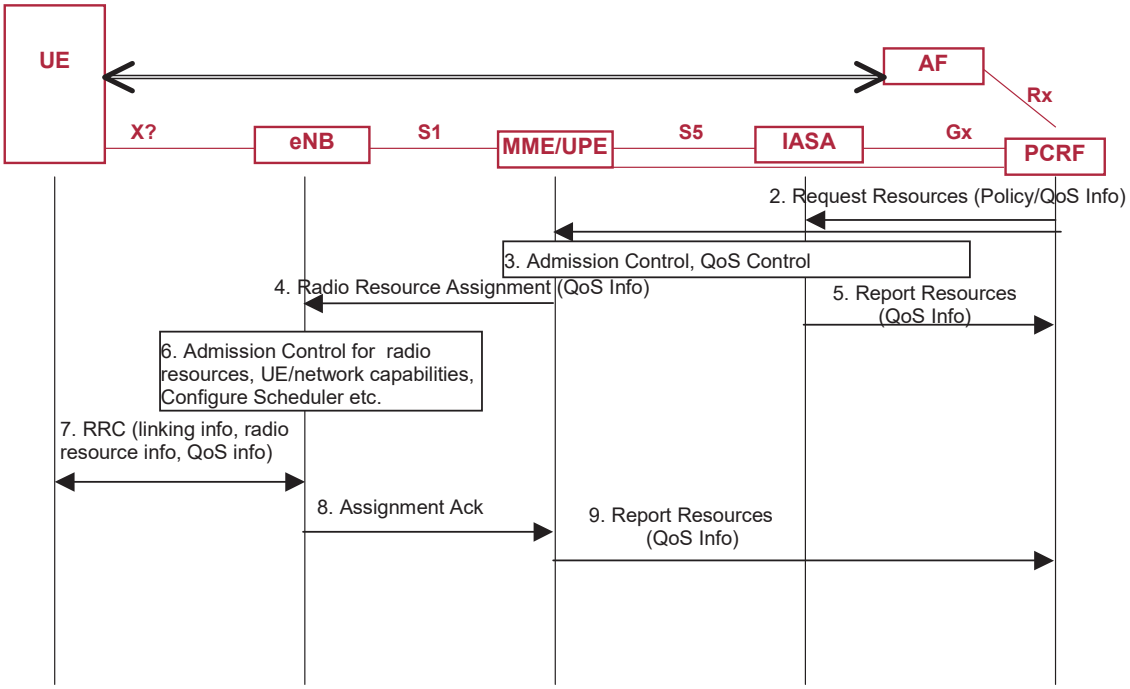

Figure H.7.1: Alternative A

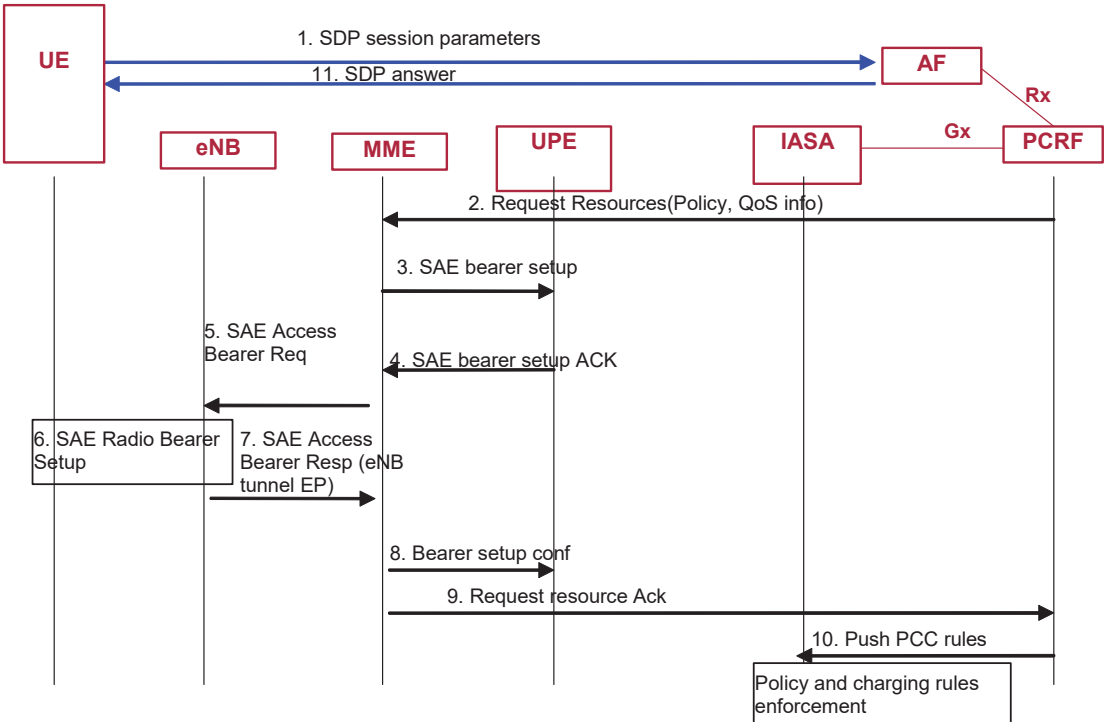

Note: The resource request from PCRF in step 2 can be replaced by a push authorization message to the IASA followed by SAE bearer setup requested from MME by the UPE, with similar acknowledgements via the IASA in step 9, but these do not affect these differences do not affect the discussion on MME and UPE.

Figure H.7.2: Alternative B

Resmed Corp. - Ex. 1037
Page 162

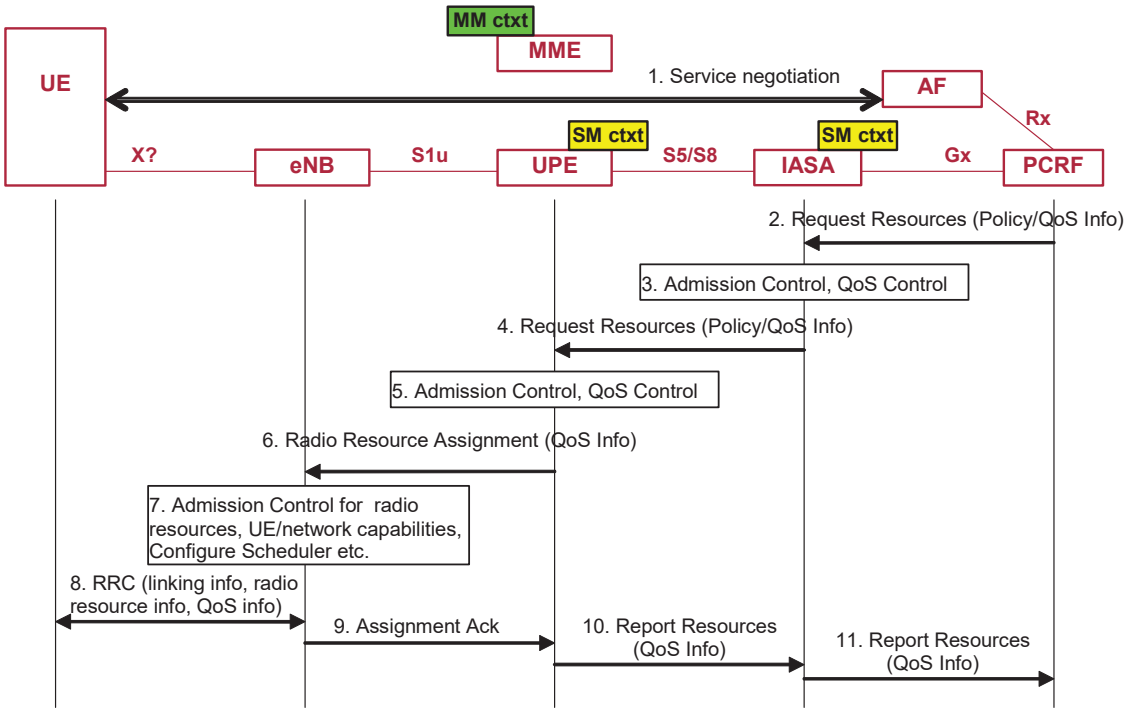

Figure H.7.3: Alternative C

H.8 Inter MME and/or inter UPE change, including support for service continuity

TBD

Figure H.8.1: Alternative A

Flows are described here when MME and UPE are separated:

Resmed Corp. - Ex. 1037
Page 163

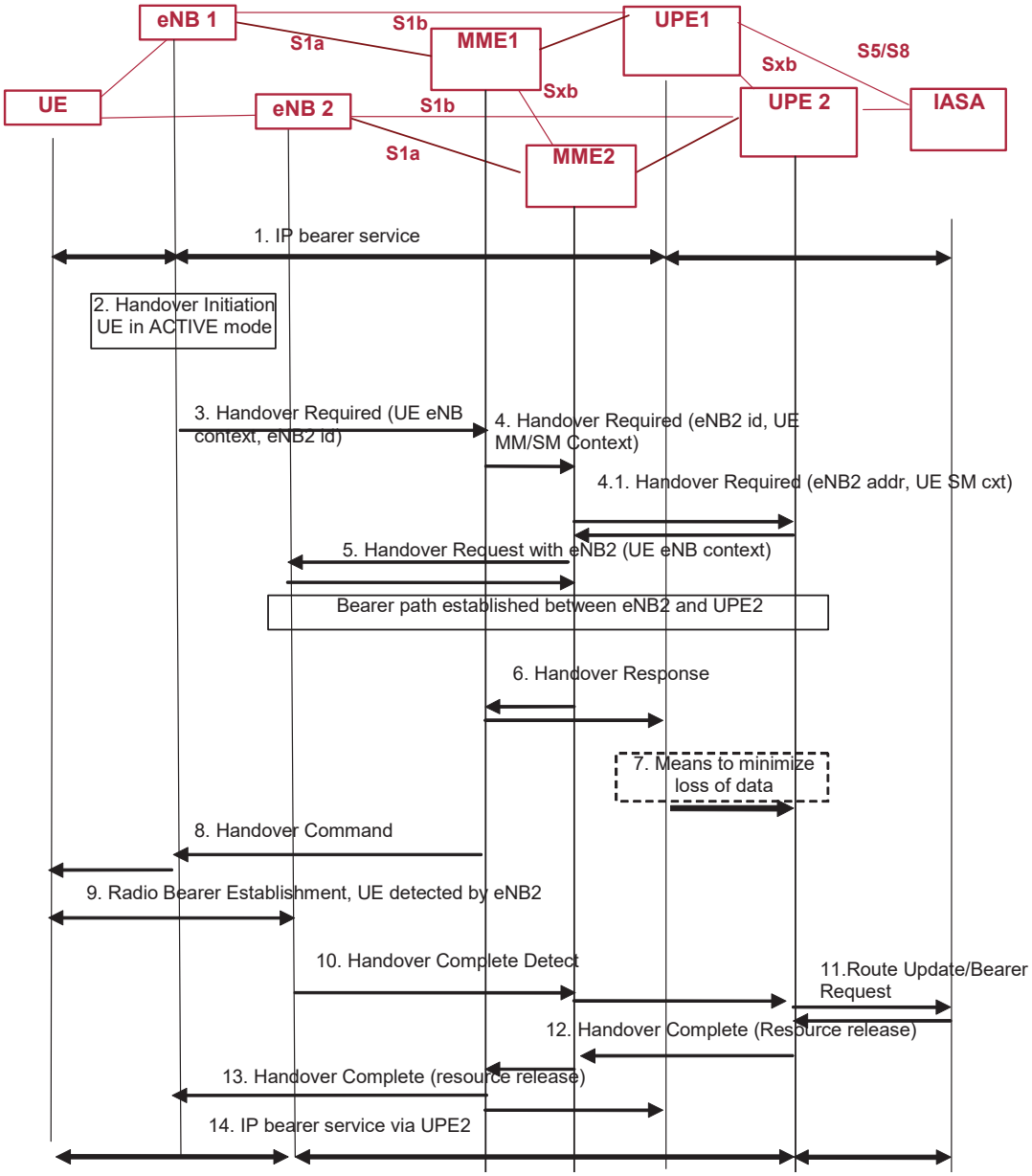

Figure H.8.2: intra-LTE MME/UPE Relocation in Active mode when MME and UPE are separated

Editor's note: transfer of PCC information is FFS

1) The IP bearer service is established between the UE and the IASA via the UPE1

2) The eNB1 decides to initiates a handover to eNB2

3) The eNB1 sends a Handover Required to the MME1.

4) The MME1 selects a MME2 serving the eNB2 the UE is going to use and sends it a Handover Preparation Request, including the UE context information.

5) The MME2 creates a UE context and sends Handover Preparation Request to UPE2. MME1 sends a Handover Preparation Request to the eNB2. The eNB2 sends a Handover Preparation Confirm to the MME2. The bearer plane is established between eNB2 and UPE2.

6) The MME2 sends a Handover Preparation Confirm to the MME1. MME1 informs UPE1 of the relocation to UPE2.

Resmed Corp. - Ex. 1037
Page 164

7) Means to minimize lost of data i.e. UPE1 starts bi-casting to eNB1 and UPE2 or data forwarding to UPE2.

8) The MME1 sends a Handover Command to the UE.

9) The UE is detected at the eNB2.

10) eNB2 sends a Handover Complete to the MME2. MME2 informs UPE2.

11) The UPE2 does a route update with the IASA.

12) UPE2 informs MME2 of the Handover Complete and the possibility to release resources in previous access. MME2 informs MME1 which triggers UPE1 to sends all downlink packets only to the UPE2.

13) The resource in the source system is released.

14) The IP Bearer service is now established between the UE and the IASA via UPE2.

TBD

Figure H.8.3: Alternative C

H.9 Authentication/Re-Authentication

If MME/UPE split, it is the MME's role to negotiate and synchronize the keys for AS, NAS and UP with UE by authentication procedure. And, the MME shall deliver the keys for UP security to the related UPE during the IP bearer establishment or after the MME and the UE renew the keys for UP security by another authentication procedure. In short, after the MME challenges the UE by performing an authentication, the MME shall deliver the renewed key for UP security to the related UPEs.

H.10 Comparison of Alternatives

The table identifies the main differences between the two MME separation approaches and compares them with combined MME/UPE. Also a comparison with the SGSN is included as the MME is sometimes compared with the control part of an SGSN.

Resmed Corp. - Ex. 1037
Page 165

Dynamic characteristics	SGSN	MME/UPE	MME/UPE Split B)	MME/UPE Split C)
Idle state RAU	any RAU	any RAU	any RAU to MME nothing to UPE	any RAU to MME any RAU to UPE
Active state NB change	any RNC/BSC change	any NB change	any NB change to MME any NB change to UPE	Only RAU to MME, no other NB changes to MME any NB change to UPE
Idle to active latency	Depends on SGSN split	1) Service Request 2) RAB Setup	1) Service Request 2) RAB Setup 3) Indication to UPE	1) Service Request 2) Request to UPE 3) RAB Setup
Dedicated (QoS) Bearer Setup latency	Depends on SGSN split	1) Request from IASA 2) RAB Setup	1) Request from IASA 2) Request to MME 3) RAB Setup 4) Indication to UPE	1) Request from IASA 2) RAB Setup
paging	1) downlink packet 2) Paging request to RAN	1) downlink packet 2) Paging request to NBs	1) downlink packet 2) Request to MME 3) Paging request to NBs	1) downlink packet 2) Request to MME 3) Paging request to NBs
MME – UPE ignalling procedures	none	none	-Initial attach -state transition -paging -load balancing -keep alive -inter UPE handover -handover 2G/3G -dedicated bearer setup -NB change	-Initial attach -state transition -paging -load balancing -keep alive -RAU -inter UPE handover -handover 2G/3G
Inter NB handover without MME and UPE change	n.a.	1) NB change 2) NB update to MME/UPE 3) MME/UPE response to NB	There is the need to update the UPE and to update the MME. The procedure is FFS.	1) NB change 2) NB update to UPE 3) UPE response to NB
Handover ignalling 2G/3G to LTE	via Gn	via S3 1) RNC request to SGSN 2) SGSN request to MME/UPE 3) MME/UPE request RAN resources and bearer NB-UPE 4) MME responds to SGSN 5) SGSN sends handover command	via S3 at MME 1) RNC request to SGSN 2) SGSN request to MME 3) MME requests NB resources 4) MME requests UPE resources 5) MME initiates bearer NB-UPE 6) MME responds to SGSN 7) SGSN sends handover command	via S3 at MME 1) RNC request to SGSN 2) SGSN request to MME 3) MME requests UPE to establish NB resources and bearer NB-UPE 4) UPE request NB resources and bearer NB-UPE 5) MME responds to SGSN 6) SGSN sends handover command RAN resources
Handover ignalling for MME and UPE change	n.a.	1) NB request to MME/UPE 2) MME/UPE request to new MME	1) NB request to MME 2) MME request to new MME 3) new MME requests NB	1) NB request to UPE 2) UPE request to old MME 3) old MME request to new

Resmed Corp. - Ex. 1037
Page 166

		3) new MME requests NB resources and bearer NB-UPE 4) new MME/UPE responds to old MME7upe 5) old MME sends handover command	resources 4) New MME request UPE resources 5) new MME initiates bearer NB-UPE 6) new MME responds to old MME 7) old MME sends handover command	MME 4) New MME request new UPE resources 5) new UPE request NB resources and bearer NB-UPE 6) new MME responds to old MME 7) old MME responds to UPE 8) old UPE sends handover command
Inter MME Handover without UPE change	n.a.	via S10	1) NB request to MME 2) MME request to new MME (new MME accepts old UPE) 3) new MME responds to old MME 4) old MME sends handover command 5) UE sends TA Request (FFS) 6) new MME confirms new TA (FFS)	1) NB update request to UPE 2) UPE update response to new NB 3) UE sends TA Request 4) new MME confirms new TA
Static characteristics				
UE context	yes	yes	Most in MME, some in UPE	Most in MME, some in UPE
Bearer context	yes	yes	in MME and in UPE	In UPE
Load balancing	Within SGSN pool(s)	Within MME/UPE pool(s)	Within MME pool(s) Within UPE pool(s)	Within MME pool(s) Within UPE pool(s)
MME recovery	New UE attach	New UE attach	New UE attach	New UE attach
UPE recovery	New UE attach	New UE attach [recovery for UE triggered by downlink packets]	E.g. new UE attach recovery for UE triggered by downlink packet FFS	New UE attach [recovery for UE triggered by downlink packets]
Other functions				
CDR generation	yes	yes	MME and UPE (not in UPE but in IASA when collocated with UPE) Generation by MME if needed.	UPE (not in UPE but in IASA when collocated with UPE)
Legal Intercept	yes	yes	MME and UPE (not in UPE but in IASA when collocated with UPE)	UPE (not in UPE but in IASA when collocated with UPE) FFS whether the UPE receives all events for LI or whether additional MME-UPE communication needed.
S1 – MME	Iu	Common connection	Common connection with	Common connection with

Resmed Corp. - Ex. 1037
Page 167

	connection	with NB for NAS and UP control	NB for NAS and UP control	NB for NAS
S1 – UPE	GTP-U	e.g. GTP-U	e.g. GTP-U, GTP-C (FFS)	e.g. GTP-C and GTP-U

Annex I: Open issues for the SAE architecture (Informative)

The followings capture the differences of major alternatives for the SAE architecture, which are in line with the working assumptions agreed. Note that 'roaming' in this annex refers only roaming between SAE networks.

- Separate the functionalities of 3GPP anchor and SAE anchor.
  - Alternative X
    - 3GPP anchor: Function that anchors the user plane for mobility between 3GPP access systems, and includes GTP interface to SGSN in the GPRS Core. *It handles pre-LTE access bearers, by terminating the bearers or by associating them with the user data traffic. (Note that the LTE access bearer termination and/or association with the user data traffic is a UPE function, which is collocated with 3GPP anchor.)*
    - SAE MM anchor: Function that anchors the user plane for mobility between 3GPP access systems and non-3GPP access systems. *It also handles the mobility for UPE/3GPP anchor relocation.*
    - SAE PDN gateway: Function for IP connectivity with PDNs/Service Domains (IP address allocation for user data traffic, PCEF and LI for user plane traffic, interfacing with the PCC and charging systems).
  - Alternative Y
    - 3GPP anchor: Function that anchors the user plane for mobility between 3GPP access systems, and includes GTP interface to SGSN in the GPRS Core.
    - SAE MM anchor: Function that anchors the user plane for mobility between 3GPP access systems and non-3GPP access systems
    - SAE PDN gateway: Function for IP connectivity with PDNs/Service Domains (IP address allocation for user data traffic, PCEF and LI for user plane traffic, interfacing with the PCC and charging systems). *It also handles 3GPP access bearers, by terminating the bearers or by associating them with the user data traffic.*

- 3GPP anchor location
  - Alternative A
    - collocated with UPE:
    - SAE PDN gateway/SAE MM anchor can be collocated also by implementation.
  - Alternative B
    - For roaming case with home routed traffic: 3GPP anchor and UPE are collocated in VPLMN, SAE PDN gateway is (SAE MM anchor if needed) in HPLMN.
    - For non-roaming case all in one.
  - Alternative C
    - 3GPP Anchor and UPE are collocated (when a 3GPP Anchor is needed); also collocated with SAE PDN Gateway/SAE MM Anchor in non-roaming case

Resmed Corp. - Ex. 1037
Page 168

- SAE MM anchor location for the roaming case with home routed traffic
  - Alternative 1
    - There is an SAE MM anchor in VPLMN
  - Alternative 2
    - An SAE MM anchor is only in HPLMN

Resmed Corp. - Ex. 1037
Page 169

Annex J: Change history

Change history							
Date	**TSG #**	**TSG Doc.**	**CR**	**Rev**	**Subject/Comment**	**Old**	**New**
2005-04	44	S2-050352	-	-	Section 7 was updated in line with Tdoc S2-050352	V0.0.1	V0.0.2
2005-04	SA2 #45		-	-	Includes approves contributions S2-050921, S2-050723, S2-050962	V0.0.2	V0.1.0
2005-04			-	-	Editorial update to contents section	V0.1.0	V0.1.1
2005-05	*SA2 #46*		*-*	*-*	*Includes approved contribution S2-051359*	*V0.1.1*	*V0.2.0*
2005-07	*SA2 #47*		*-*	*-*	*Includes approved contributions SRJ-050116, SRJ-050117 (incorporated into section 5 rather than section 7), SRJ-050121, SRJ-050124, S2-051854 (with change of TS to TR in reference [4]), and, S2-051891.*	*V0.2.0*	*V0.3.0*
2005-09	*SA 2, RAN 2, RAN 3*		*-*	*-*	*Includes SRJ-050246.*	*V0.3.0*	*V0.4.0*
2005-09	*SA 2 #48*		*-*	*-*	*Includes approved contributions S2-052378, S2-052379, S2-052380, S2-052382, S2-052323, S2-052383, S2-052412, S2-052408*	*V0.4.0*	*V0.5.0*
2005-09	SA2/RAN, Tallinn		-	-	Includes REV-05179 and the text indicated in the meeting report that relates to the discussion on REV-05177. The complete table in REV-05179 has been used to replace the existing table. Text from REV-05177 has been placed into section 5 and a new section 7.3.	V0.5.0	V0.6.0
2005-10	SA 2 ad hoc, Seattle		-	-	Includes SA 2 ad hoc agreed documents: S2H050104, S2H050177, S2H050197, S2H050341, S2H050344, S2H050345, S2H050370, S2H050371, S2H050373, S2H050377 and S2H050378.	V0.6.0	V0.7.0
2005-10	SA 2 email review		-	-	Document incorporation problems solved. With regard to S2H050341, in figure B.2, PCRF2 now connects to 'evolved packet core' rather than 'inter-AS MM'. Re S2H050373, textboxes in figures E.3 and E.4 have been expanded so that the "+" in "Wi+" is again visible.	V0.7.0	V0.7.1
2005-11	SA2 #49		-	-	Includes contributions approved during the physical meeting and those agreed in the ensuing email approval. These documents are: S2-052625; S2-052661; S2-052843 rev 1; S2-052845 rev 1; S2-052886 rev 1; S2-052945 rev 2; S2-052966; S2-052967; S2-052968 rev 2; S2-052971 rev 6; S2-052972; S2-052973 rev 2; S2-053024; and S2-053025 rev 1. In addition: a) an Editor's note has been added to Annex B to discourage further contributions to Annex B; b) in line with the agreed proposal in S2-052661, other occurrences of "legacy" have been replaced by the term "pre-SAE/LTE"; and c) revision marks show some obvious editorial/typing corrections.	V0.7.1	V0.8.0
2005-11	SA 2 email review		-	-	Duplicate figure numbering in section 7.7 (now 7.8) resolved. Unusual sentence and indentation removed from definitions (section 3.1).	V0.8.0	V0.8.1
2005-12	SA2/RAN, Malta		-	-	Includes revisions of the RAN 3 contributions to the joint meeting plus revision of S2-053016. The agreed updates are included from RP-050887; RP-050888; RP-050889; RP-050890; RP-050892; and RP-050893. Note: RP-05887 is inserted as section 7.7 and subsequent sections/figures are renumbered. Also, the note in RP-050887 that would duplicate the one added by RP-050888 is removed. One note in section 7.14 (from RP-050892) has been extended to reference text that is now in RAN TR 25.912 rather than this TR.	V0.8.1	V0.9.0
2006-01	SA 2 #50, Budapest				Includes the following SA2 agreed contributions: S2-060162, S2-060319, S2-060393, S2-060430, S2-060444, S2-060445, S2-060477, S2-060478, S2-060486, S2-60488, S2-060523, S2-060525, S2-060432r3, S2-060479r2, S2-060482r1, S2-060483r1, S2-060504r5, S2-060512r1, S2-060524r2, S2-060526r2, S2-060527r1, S2-060528r2, S2-060554r4, plus some spelling corrections.	V0.9.0	V0.10.0

Resmed Corp. - Ex. 1037
Page 170

Change history							
Date	TSG #	TSG Doc.	CR	Rev	Subject/Comment	Old	New
2006-02	SA 2 #51, Denver and joint SA 2 – RAN 2 – RAN 3, Denver				Includes the following SA2 agreed contributions: S2-060650, S2-060653, S2-060818, S2-060998, S2-061116, S2-061117, S2-061127, S2-061128, S2-061139, S2-061140, S2-061168, S2-061191, S2-061192, S2-061193, S2-061194, S2-061221, and the following contributions agreed at the joint SA 2 – RAN 2 – RAN 3 meeting: SRJ-060033, SRJ-060051, SRJ-060055, SRJ-060059. The partial conclusion from debate in S2-R2-R3 meeting on "limited signalling idle mode mobility" is added to section 7.6.2.	V0.10.0	V0.11.0
2006-03	SP-31	SP-060152	-	-	Editorial update by MCC for presentation to TSG SA for Information	0.11.0	1.0.0
2006-04	SA 2 ad hoc, Paris				Includes the following contributions agreed at the ad hoc meeting on SAE: S2H060391, S2H060449, S2H060455, S2H060460, S2H060461, S2H060463, S2H060466, S2H060467, S2H060468, S2H060480, S2H060481, S2H060486, S2H060487, S2H060489 Although approved at this ad hoc meeting, S2H060472 has not been incorporated because the text has already been introduced (with slightly different wording) as bullet 7 in section 7.10.1 in S2H060489. In addition, discussion of S2H060452 resulted in the request for the editor to remove the text from section 7.8.2.6.	V1.0.0	V1.1.0
2006-05	SA2 #52, Shanghai				Includes the following SA2 agreed contributions: S2-061752, S2-061916, S2-061918, S2-061921, S2-061964, S2-061976, S2-061988, S2-061993, S2-062003, S2-062005.	V1.1.0	V1.2.0
2006-05	SA2 E-mail review				Editorial update to correct implementation of S2-061993 and S2-061976.	V1.2.0	V1.2.1
2006-05	SA2 E-mail review				Editorial update to correct implementation of S2-061993	V1.2.1	V1.2.2
2006-06	-	-	-	-	Editorial update by rapporteur to correct reference 18, remove draft from header, correct change history, and various typos	V.1.2.2	V1.2.3
2006-07	SA2 #53, Lisbon				Includes the following SA2 agreed contributions: S2-062533, S2-062570.	V1.2.3	V1.3.0
2006-09	SA2 SAE Ad-hoc and SA2 #54 Sophia Antipolis				Includes the following SA2 agreed contributions: S2-063171, S2-063173, S2-063184, S2-063188, S2-063189, S2-063191, S2-063195, S2-063197, S2-063262, S2-063439, S2-063440, S2-063192, S2-063441, S2-063198, S2-063199, S2-063442, S2-063443, S2-063330, S2-063447, S2-063448, S2-063453, S2-062799.	V1.3.0	V1.4.0
2006-09	SA2 E-mail review				Correct implementation of S2-063199 and S2-063449. Replace instances of "section" with "clause".	V1.4.0	V.1.4.1
2006-10	-	-	-	-	Editorial update to reinstate figure H.5.3 incorrectly removed in creation of V1.4.0 and correct the reference to TS 23.234	V1.4.1	V.1.4.2
2006-11	SA2 #55, Busan				Includes the following SA2 agreed contributions: S2-064065, S2-064067, S2-064068, S2-064069, S2-064121, S2-064142	V1.4.2	V1.5.0
2006-11	SA2 E-mail review				Correct implementation of S2-064142	V1.5.0	V1.5.1
2006-11	SA2 SAE Adhoc, Montreal				Includes the following agreed contributions: S2-064280, S2-064283, S2-064285, S2-064286, S2-064290, S2-064300, S2-064302, S2-064304, S2-064305, S2-064307, S2-064309	V1.5.1	V1.6.0
2006-11	SA2 E-mail review				Correct implementation of S2-064286	V1.6.0	V1.6.1

Resmed Corp. - Ex. 1037
Page 171