IN THE UNITED STATES DISTRICT COURT
FOR THE EASTERN DISTRICT OF TEXAS
MARSHALL DIVISION

FRACTUS, S.A., v. ADT LLC d/b/a ADT SECURITY SERVICES	**Civil Action No. 2:22-cv-00412-JRG (Lead Case)**
FRACTUS, S.A., v. VIVINT, INC.	**Civil Action No. 2:22-cv-00413-JRG (Member Case)**

DEFENDANTS ADT LLC AND VIVINT, INC.'S RESPONSIVE CLAIM CONSTRUCTION BRIEF

TABLE OF CONTENTS

Page

I. INTRODUCTION 1
II. AGREED CONSTRUCTION 1
III. DISPUTED TERMS FOR CONSTRUCTION 2
A. The "device" terms 2
i. "Wireless Device" 3
ii. "Mobile Communications Device" 4
iii. "Portable Wireless Device" 5
B. "common conductor" 6
C. "perimeter" 8
IV. TERMS CONTENDED TO BE INDEFINITE 11
A. "not similar [in shape/ in size]" 11
i. "not similar in shape" 12
ii. "Not similar in size" 13
B. "close proximity region" terms 14
C. "hole(s) intersects the [external] perimeter" 18
D. "4G Communication standard/ communication standard(s)" and "receive signals from a 4G communication standard" 19
E. "complexity factor" 23
F. "grid dimension curve" 30
V. CONCLUSION 30

TABLE OF AUTHORITIES

Page(s)

Cases

ACQIS LLC v. Alcatel-Lucent USA Inc.,
No. 6:13-CV-638, 2015 WL 1737853 (E.D. Tex. Apr. 13, 2015).....12

Ball Metal Beverage Container Corporation v. Crown Packaging Technology, Inc.,
2020 WL 7828776 (Fed. Cir. 2020).....24, 30

Bicon, Inc. v. Straumann Co.,
441 F.3d 945 (Fed. Cir. 2006).....4

Diebold Nixdorf, Inc. v. ITC,
899 F.3d 1291 (Fed. Cir. 2018).....20

Fractus, S.A. v. AT&T Mobility LLC,
No. 2:18-CV-00135-JRG, 2019 WL 1641357. (E.D. Tex. Apr. 16, 2019) 12

Fractus, S.A. v. Samsung et al.,
No. 6:09-cv-203-LED-JDL, 2011 U.S. Dist. LEXIS 171481 (E.D. Tex. Feb. 8, 2011) 9

Gree, Inc. v. Supercell Oy,
No. 219-CV-00070-JRG-RSP, 2020 WL 2332144 (E.D. Tex. May 11, 2020).....11

Icon Health & Fitness, Inc. v. Polar Electro Oy,
656 F. App'x 1008 (Fed. Cir. 2016) 22

Innogenetics N.V. v. AT&T Inc.,
NO. 6:09-cv-00294-LED-JDL, 2011 WL 738927 (E.D. Tex. Feb. 23, 2011) 22

Internet Machs. LLC v. Alienware Corp.,
No. 6:10-cv-023, 2011 WL 13096501 (E.D. Tex. June 23, 2011) 20

Interval Licensing LLC v. AOL, Inc.,
766 F. 3d 1364 (Fed. Cir. 2014).....11, 13

IQASR LLC v. Wendt Corp.,
825 F. App'x 900 (Fed. Cir. 2020) 16, 17

Liberty Ammunition, Inc. v. United States,
835 F.3d 1388 (Fed. Cir. 2016).....14

Luminati Networks Ltd. v. BIScience Inc.,
No. 2:18-CV-00483-JRG, 2019 WL 6683268 (E.D. Tex. Dec. 6, 2019).....11

Nautilus, Inc. v. Biosig Instruments, Inc.,
572 U.S. 898 (2014).....11, 20, 23

Phillips v. AWH Corp.,
415 F.3d at 1318 (Fed. Cir. 2005).....16

Teva Pharms. USA, Inc. v. Sandoz, Inc.,
789 F.3d 1335 (Fed. Cir. 2015).....24

Versata Software, Inc. v. Zoho Corp.,
213 F. Supp. 3d 829 (W.D. Tex. 2016).....21

Statutes and Codes

United States Code,
Title 35, section 112(b).....11

I. INTRODUCTION

The asserted patents concern various aspects of miniaturized, multiband antennas that are folded and shaped to fit inside small, handheld, wireless devices such as cell phones. The subject matter falls into four basic categories: the exterior shape of the antennas (U.S. Patent Nos. 8,456,365 and 8,674,887), the holes in the antennas (U.S. Patent Nos. 7,471,246 and 7,907,092), the close proximity antennas (U.S. Patent Nos. 8,994,604; 10,135,138; and 10,468,770), and certain numerical expressions of the shape of the antennas themselves (U.S. Patent Nos. 8,738,103 and 11,349,200). The language of these patents is unnecessarily complex. Where Defendants have offered specific constructions for certain terms, the constructions are consistent with the intrinsic and extrinsic evidence and will be helpful to the trier of fact. Defendants identified that the remaining disputed terms allow a POSITA to choose from a multiplicity of options to reach opposing conclusions with respect to the same device, and neither Fractus nor its expert has sufficiently addressed such ambiguity; as a result, those terms are indefinite as a matter of law.

II. AGREED CONSTRUCTION

Patent and Claims	Term to be construed	Agreed Construction
’887 Patent, claims 1, 2, 4, 5, 7, 14, 16, 18	“space -filling curve”	“A curve characterized by at least ten segments that are shorter than a tenth of a free-space operating wavelength of the multiband antenna, each of the segments being connected to its neighboring segments at an angle such that no pair of adjacent segments defines a longer straight segment, wherein any periodicity of the space-filling curve along a fixed straight direction of space involves a periodic structure having a period defined by a non-periodic curve comprising at least ten connected segments in which no pair of adjacent ones of the connected segments defines a longer straight segment.”

III. DISPUTED TERMS FOR CONSTRUCTION

A. The "device" terms

Patent and Claims	Defendants' Revised Proposal	Fractus's Proposal
"wireless device" ('200 Patent, all asserted claims; '103 Patent, all asserted claims; '092 Patent, all asserted claims)	"A device with the ability to transmit and receive voice, data, or video signals through the radio spectrum that does not require a physical wire to operate ~~adapted to permit running of word-processing, spreadsheet, and slide software applications."~~ ~~Alternatively, the plain and ordinary meaning which is "a device that does not require a physical wire to operate while being easily carried or moved from one location to another."~~	No construction necessary.
"mobile communication device" ('365 Patent, all asserted claims; '887 Patent, all asserted claims.)	"A device with the ability to transmit and receive voice, data, or video signals through the radio spectrum that does not require a physical wire to operate ~~adapted to permit voice communication capabilities, on board sensors that allow the device to capture (e.g., photograph, video, record, or determine location) information, and/or built-in features for synchronizing local data with remote locations~~."	No construction necessary.
"wireless portable device" ('604 Patent, all asserted claims)	"A device with the ability to transmit and receive voice, data, or video signals through the radio spectrum that does not require a physical wire to operate ~~adapted to permit voice communication capabilities, on board sensors that allow the device to capture (e.g., photograph, video, record, or determine location) information, and/or built-in features for synchronizing local data with remote locations."~~ Alternatively, the plain and ordinary meaning which is "a device that does not require a physical wire to operate while being easily carried or moved from one location to another."	No construction necessary.

i. "Wireless Device"

Through the course of exchanging the required disclosures of P.R. 4-1 and 4-2, the parties agreed to drop "handheld multifunction wireless device" (which appears in all asserted claims of the '103 Patent and the '200 Patent) as a separate proposed term for construction, and instead focus solely on the phrase "wireless device" as it appears in those patents, as well as in all asserted claims of the '092 Patent. With that agreement, the "adapted to permit running of word-processing, spreadsheet, and slide software applications" portion of Defendants' construction of "wireless device" is superfluous and falls away. Moreover, Fractus does not dispute the first portion of Defendants' construction – namely, "a device with the ability to transmit and receive voice, data, or video signals through the radio spectrum," but instead argues that Defendants' proposal suffers from a "fatal flaw of requiring that the device be able to operate without a wire." Dkt. 75 at 3 (emphasis in original). In Fractus's view, the key is "that the device communicates—*i.e.,* sends and receive signals—without the use of a physical connection." *Id*.

Fractus's proposed construction is overly narrow, as it limits the "wireless" characteristic to communications only. This ignores the intrinsic evidence, which makes clear that a "wireless device" is a device that can operate without physical wires. For example, the '103 Patent describes "a multifunction wireless device (MFWD), and, more particularly, but not by way of limitation, to a multifunction wireless device ***and*** antenna designs thereof combining into a single unit mobile data and voice services." Dkt. 75, Ex. 3 at 1:19-22 (emphasis added). Further, it is well-understood that antennas are used to communicate via signals through the radio spectrum, *i.e.,* wirelessly. Because the specification describes the "multifunction wireless device" and "antenna designs" as ***separate*** components combined together into a single unit, and because the antenna is in fact the component that facilitates wireless communication, the

"wireless device" is not simply something that can send and receive signals wirelessly. The '200 Patent makes the same distinction between the wireless device and the antenna: "the structure of the antenna system is advantageously shaped to efficiently use the volume of physical space made available for its integration ***with*** the MFWD 100 in order to obtain a superior RF performance of the antenna system." *Id.*, Ex. 11 at 10:53-58. The claim language of the asserted patents also set forth that every claimed "wireless device" comprises "an antenna system" (or terms that clearly equate to a functional antenna). *See, e.g., id.*, Ex. 3 at claim 1. Thus, in order to give full meaning to both terms, a "wireless device" must be "wireless" in ways beyond simply wireless communication. *See Bicon, Inc. v. Straumann Co.,* 441 F.3d 945 at 950 (Fed. Cir. 2006) ("claims are interpreted with an eye toward giving effect to all terms in the claim"). This approach also accords with the extrinsic evidence, which confirms that the plain and ordinary meaning of "wireless" means "without wires," or "having no wire or wires." *See* **Exhibit A** VIVINT0002641 at 2644–2646 (Newton's Telecom Dictionary, "Wireless"); **Exhibit B** VIVINT0002633 at 2640 (Webster's Third New International Dictionary "Wireless").[1]

ii. "Mobile Communications Device"

A similar dispute has also surfaced with respect to the term "mobile communications device" as it appears in the '365 Patent and the '887 Patent. That is, the parties appear to agree that the "adapted to permit voice communication capabilities, on board sensors that allow the device to capture (e.g., photograph, video, record, or determine location) information, and/or built-in features for synchronizing local data with remote locations" portion of Defendants'

[1] To be clear, Defendants' proposal does not exclude such devices from ***also*** being able to communicate wirelessly, as reflected in Defendants' reliance on the dictionary definition from *Wiley Electrical and Electronics Engineering Dictionary* in their P.R. 4-2 disclosures. *See* Dkt. 75, Ex. 4 at 6 ("Wireless Device"). Rather, the intrinsic and extrinsic evidence requires simply that the wireless device, at a minimum, does not require a physical wire in order to be operable.

proposal goes to what it means for a device to be a "communications" device, and the dispute is in fact what it means for that device to be "mobile." Accordingly, Defendants agree that the latter portion of their proposed construction can be omitted from their proposal. Again, Fractus does not take issue with the first portion of the remainder of the proposed construction; it is the possible presence of a physical wire that is again at the crux of the parties' dispute.

Fractus raises no arguments with respect to "mobile" as it appears in the claim. But Defendants' proposal gives full meaning to this term as it is used in both the claims and the specification, which makes it clear that the claimed "mobile" device is a device that can be operated without wires. *See, e.g.,* Dkt. 75, Ex. 6 at 9:67-10:3 ("Such an antenna housing could be affixed, for example, to a candy bar type mobile communication device, to a clam-shell type mobile communication device, to a gaming device, or to a PDA."). The figures give various examples of such devices. *See id.,* Fig. 12 (showing a clamshell-type cellular phone that can operate without a physical wire); Fig. 13 (showing candy-bar type cellular phone that can operate without a physical wire); Fig. 14 (showing a PDA or gaming device that can operate without a physical wire).

iii. "Portable Wireless Device"

Both Fractus and its expert simply fail to separately address the term "portable" as it appears in the claims of the '604 Patent. The addition of "portable" to "wireless device" again simply reinforces the notion that these terms must refer to the capability to operate without wires, because the plain and ordinary meaning of "portable" for a device is a device that is "easily carried or moved from one location to another." *See* Ex. A, VIVINT0002641 at 2643 (Newton's Telecom Dictionary, "Portable").

In sum, Defendants' proposals are rooted in the intrinsic and extrinsic evidence whereas Fractus essentially contends that no construction is necessary in order to avoid the issue.

Construing these terms now will address latent disputes about claim scope and prevent issues of differing claim interpretations from arising during expert discovery. Thus, the Court should adopt Defendants' revised proposals for these terms.

B. "common conductor"

Patent and Claims	Defendants' Proposal	Fractus's Proposal
'887 Patent, claims 1, 14; '365 Patent, claims 1, 37	"A contiguous conductive element having at least a first and second radiating arm each originating from discrete points along the perimeter of the contiguous conductive element."	No construction necessary.

The term "common conductor" is not well-known in the art and has no plain and ordinary meaning. It therefore warrants construction. Fractus seems to acknowledge this by belatedly offering a definition from Dr. Long. Dkt. 75, Ex. 1 at 7 ("Dr. Long states that the ordinary meaning of 'common conductor' is just the 'part of a conducting radiating structure coupled to the feeding point that carries current to multiple portions (or arms or branches) of the radiator."). Accepting this characterization at face value, the difference between the parties' proposed constructions is that Defendants have offered a construction that is rooted in the specification; Fractus has not. Indeed, Dr. Long and Fractus offer ***no intrinsic support*** for Fractus's new proposal. That is because the specification confirms that the common conductor is not just some poorly defined segment of a structure, but rather it is itself a structure, with a clearly delineated starting and end point.

As shown below, the specification illustrates the structure of the common conductor. The common conductor is shown as element 16 (Figs. 1, 2) and 52 (Figs. 3, 4, 5, 6). *See, e.g.,* Dkt. 75, Ex. 5, Figs 1-6 (annotated). In both examples of the common conductor, the first and second radiating arms originate from discrete points along the perimeter (*i.e.* the outer boundary; *see*

Section III.C) of the conductor. The modifying word "common" refers to the conductor being shared or combined with each of the radiating arms and the feeding point. Therefore, the conductor is "common" to both the first and second radiating arms:

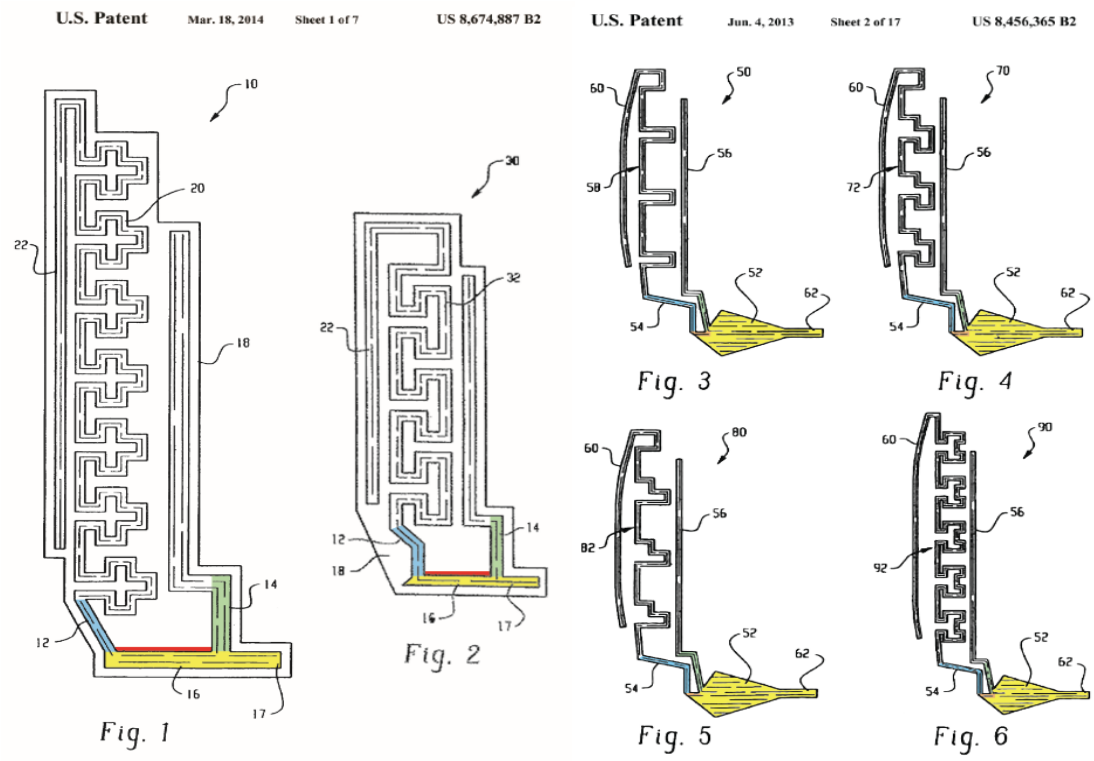

Visually, it is easy to see that the radiating arms 12 (blue), 14 (green) (Figs. 1, 2) and 54, 56 (Figs. 3-6) originate from the outside perimeter (*i.e.* the boundary) of the common conductor element (yellow) and extend outward. In every example in the specifications, each of the radiating arms originates from a distinct position on the outside perimeter of the common conductor (as established by the perimeter portion highlighted in red, separating the radiating arms), and thus that must be part of a proper construction. In addition, the '365 Patent explains that the common conductor "extends horizontally (as viewed in FIG. 3) away from the radiating arms 54, 56, and that may be folded in a perpendicular direction (perpendicularly into the page) in order to couple the feeding port 62 to communications circuitry in a mobile communications device." Dkt. 75, Ex. 6 at 4:1–8. Thus, the common conductor has a specific shape that "extends

horizontally" as shown in the Figures, and this shape accommodates being folded and bent for placement in a mobile communication device.

Thus, the intrinsic record does not permit a POSITA to arbitrarily select any portion of the radiating structure as the "common conductor," but rather has definite starting and end points, and a defined shape. By contrast, Fractus's proposed construction permits improper ambiguities to arise. Specifically, Dr. Long's proposed explanation of a common conductor as "part of a conducting radiating structure coupled to the feeding point that carries current to multiple portions (or arms or branches) of the radiator" is overly broad and lacks any intrinsic support. Dkt. 75, Ex. 1 at ¶ 41. Dr. Long's definition ignores the disclosure of the specification where the "common" portion of the conductor is coupled to ***both*** the radiating arms and the feeding point. Instead, it permits Fractus to read "common conductor" on ***any*** portion of the radiating structure coupled to the radiating arms, regardless of whether it is in fact "common" to the radiating arms, the feeding point, and/or has a shape that "extends horizontally."

In sum, Dr. Long's overbroad definition (and by extension, Fractus's proposal) is at odds with the carefully crafted structure of a common conductor as described by the specification. Thus, Defendants' construction is to be preferred.

C. "perimeter"

Patent and Claims	Defendants' Proposal	Fractus's Proposal
'092 Patent, claims 1, 11, 12, 26; '103 Patent, claim 12; '200 Patent, claims 1, 3, 6, 9, 11.	"The continuous line forming the boundary of a closed geometric figure."	No construction necessary.

Construction of the term "perimeter" according to its plain and ordinary meaning is necessary because while Fractus has claimed no construction is necessary, it has variously offered several definitions—sometimes in accordance with the plain and ordinary meaning, and sometimes not, leading to a total lack of clarity as to the intended claim scope. This is a dispute

that should be resolved by construing the term according to its ordinary meaning in accordance with Defendants' proposal.

The plain and ordinary meaning of "perimeter" is "a continuous line forming the boundary of a closed geometric figure." *See* **Exhibit C,** FRAC-VIVINT-00231542 (Pocket Oxford English Dictionary, defining "perimeter" as "**1** the outermost parts or boundary of an area or object. **2** the continuous line forming the boundary of a closed figure."). Fractus itself recognized this as its plain and ordinary meaning in its P.R. 4-2 disclosures. *See* **Exhibit D,** Fractus's P.R. 4-2 Disclosures at 5 (reciting "plain and ordinary meaning," consistent with the Pocket Oxford English Dictionary definition). Dr. Long seemingly agreed, stating that "it means the boundary of a shape or object." Dkt. 75, Ex. 1, at ¶ 39.[2]

Now, Fractus has raised arguments indicating Fractus intends to interpret this claim term in a way that in fact ***contradicts*** the plain and ordinary meaning that it (and its expert) previously offered. Specifically, Fractus argues that the "perimeter" is not the boundary of the ***shape*** of the physical antenna component, but rather includes an imaginary boundary around the figure as a whole: according to Fractus's new position, the red-dashed line in the figure shown to the right (*see also* Dkt. 75 at 8) is the perimeter even though it is not "a line forming the boundary of a closed figure," and is an entirely fictitious creation with no basis in the plain and ordinary meaning of the term. Fractus identifies this area as "simply the ***extension*** of the outside of the radiating element to complete the circular shape." *Id.* (emphasis added). In

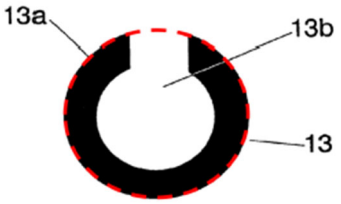

[2] Additionally, this Court has already construed the term "perimeter" for a Fractus patent, in *Fractus, S.A. v. Samsung et al.* to mean the outer boundary of the relevant shape. Case. No. 6:09-cv-203-LED-JDL, 2011 U.S. Dist. LEXIS 171481 (E.D. Tex. Feb. 8, 2011) ("The Court agrees with Plaintiff that the term 'perimeter' in the relevant claims refers to the outer boundary of the relevant shape.").

so doing, Fractus simply disregards the testimony of its own expert, who declared that the plain and ordinary meaning of "perimeter" does ***not*** include such extension and is instead the "boundary of a shape or object." Dkt. 75, Ex. 1, at ¶ 39.

Aside from this internal inconsistency, Fractus's argument also fails because under this new approach, a POSITA is free to draw the "perimeter" along ***any*** of the dashed-lined paths shown below:

Example A **Example B** **Example C** **Example D**

Fractus's approach demonstrates that, although "perimeter" has a plain and ordinary meaning, Fractus's implied construction causes an indefiniteness problem. Thus, not only is a construction is required, but the Court should also construe "perimeter" according to the plain and ordinary meaning advanced by Defendants and agreed to by Fractus's expert – which is "the continuous line forming the boundary of a closed geometric figure."

Fractus complains that this does not cover a situation in which a "hole intersects the perimeter," which is discussed further below in connection with that phrase. But Fractus does not provide an alternative definition that has a reasonably certain meaning and could be consistently applied by those of skill in the art—not to mention any evidence of how a POSITA would come to any special alternative definition. Because Fractus's argument seeks an implied construction of "perimeter" that lacks any reasonably certain definition and is not supported by the plain and ordinary meaning of that term, the Court should reject it and adopt Defendants' proposal.

IV. TERMS CONTENDED TO BE INDEFINITE

Under 35 U.S.C. § 112(b), a patent claim is invalid for indefiniteness if it fails to clearly and distinctly define the invention. A claim is indefinite if it fails to inform a POSITA with reasonable certainty of the invention's scope when read in view of the specification and prosecution history. *Nautilus, Inc. v. Biosig Instruments, Inc.*, 572 U.S. 898, 910 (2014).

A. "not similar [in shape/ in size]"

Patent and Claims	Defendants' Proposal	Fractus's Proposal
'092 Patent, claim 1; '246 Patent, claims 13, 15, 30.	Indefinite	Not indefinite. No construction necessary.

Terms of degree are not *per se* problematic. However, claims with such terms, when read in the light of the specification, must provide ***enough*** certainty to one of skill in the art when read in the context of the invention. *Interval Licensing LLC v. AOL, Inc.*, 766 F. 3d 1364, 1370-1 (Fed. Cir. 2014) ("it is not enough . . . to identify 'some standard for measuring the scope of the phrase."). Instead, "[t]he claims, when read in light of the specification and the prosecution history, must provide ***objective boundaries*** for those of skill in the art." *Id.* at 1371 (emphasis added).

Moreover, Fractus repeatedly criticizes Defendants for offering no supporting expert declaration on indefiniteness (*see, e.g.,* Dkt. 75 at 13-14, 16, 17, 18, 20), but "it is not necessary to have expert testimony on the issue of indefiniteness." *Gree, Inc. v. Supercell Oy*, No. 219-CV-00070-JRG-RSP, 2020 WL 2332144, at *34 (E.D. Tex. May 11, 2020); *Luminati Networks Ltd. v. BIScience Inc.*, No. 2:18-CV-00483-JRG, 2019 WL 6683268, at *9-*10 (E.D. Tex. Dec. 6, 2019) (finding claim indefinite even though the defendant did not offer expert testimony, and describing the testimony from plaintiff's expert as "unhelpful").

Further, neither of these patents provides objective boundaries of what makes two shapes "not similar in shape" and "not similar in size." This makes these patents distinguishable from those at issue in *Fractus, S.A. v. AT&T Mobility LLC*, in which this Court found that the term "similar" was "reasonably clear in light of the specification." No. 2:18-CV-00135-JRG, 2019 WL 1641357, *29. (E.D. Tex. Apr. 16, 2019). Instead, "not similar" in this context is more akin to the claim term "similar" that was found to be indefinite in *ACQIS LLC v. Alcatel-Lucent USA Inc.,* No. 6:13-CV-638, 2015 WL 1737853 (E.D. Tex. Apr. 13, 2015). Moreover, Dr. Long had several opportunities to explain the distinction, and was unable to do so.

i. "not similar in shape"

In his declaration, Dr. Long wrote, "If asked to define the ordinary meaning of 'not similar in shape' I would say it refers to geometric shapes that have different geometric figures." Dkt. 75, Ex. 1 at ¶ 34. When asked about his choice of the words "shapes" and "figures" in this definition, Dr. Long testified:

> [W]hen I say different geometric figures, it means in a – the sense of geometry, where we have different polygons with different sizes and – I mean, different numbers of sides to determine, for example, a triangle, or a rectangle, or a pentagon. And then also the fact that – that these geometrical shapes can be classified by their – by their geometry properties.

Dkt. 75, Ex. 10 at 79:1-9.

Dr. Long's explanation does not suggest any objective boundaries; but rather introduces more uncertainty. When asked to clarify, he stated: "Well, the patent calls out shape. And so, if I'm asked to define something that's not similar in shape, I think I need to have a different word than shapes. So I'm trying to refer back to geometric figures that one would be familiar with from taking a high school geometry class." Dkt. 75, Ex. 10 at 79:12-16. It appears that Dr. Long is simply substituting the word "figure" for "shape" in an attempt to explain his definition.

Applying his own logic, Dr. Long's opinion appears to boil down to "geometric shapes that have different geometric shapes." This explanation is self-evidently circular. Indeed, when asked a third time, Dr. Long offered yet another, different, explanation: "To be – two ellipses to be similar in shape, they would need to have the same [axes] – major to minor [axes] ratio." Dkt. 75, Ex. 10 at 32:15-17. He continued, "[t]he two shapes are similar, first of all geometrically if they have the same number of sides, and they have the same – same angles. And they have the same, by definition, the same ratios and sides, lengths of sides." *Id.* at 35:23-36:2. In other words, Dr. Long offered three ***different*** responses as to how to determine whether two shapes are not similar in shape, which simply underscores the absence of any objective criteria for the term.

ii. "Not similar in size"

"Not similar in size" similarly lacks objective boundaries. Again, Dr. Long's testimony confused, rather than clarified, matter. Asked whether two shapes would be similar in size, he responded "I don't think I can quantify what would make something different in size….***I don't think there's any way to determine similarity and size*** by some arbitrary value saying one percent." Dkt. 75, Ex. 10 at 35:3-11 (emphasis added). In other words, Dr. Long ***admitted*** that there is no objective method by which to determine similarity and size. This is unsurprising since the specification offers no objective criteria for making this determination. Patent law demands more clarity. Claims must be sufficiently definite to enable the public to decipher what infringes and what does not. *Interval Licensing LLC v. AOL, Inc.*, 766 F.3d 1364, 1373 (Fed. Cir. 2014). They cannot be purely subjective and depend "on the unpredictable vagaries of any one person's opinion." *Id.* at 1371.

In sum, without guidance from either the specification or Fractus's expert, the Court should find the terms "not similar in shape" and "not similar in size" indefinite.

B. "close proximity region" terms

Patent and Claims	Defendants' Proposal	Fractus's Proposal
"close proximity region" ('604 Patent, claims 1, 3, 13; '138 Patent, claims 9, 15; '770 Patent, claims 8, 13, 14) "coupled through a close proximity region" ('604 Patent, claims, 1, 13)	Indefinite	Not indefinite. No construction necessary. Alternatively: "a region between two radiating arms in which at least one portion on each arm is placed to allow electromagnetic fields in one arm being transferred to the other (excluding the feeding port) and the distance between the two arms is not constant throughout the entirety of the arms."

Terms of degree "necessarily call[] for a comparison against some baseline." *See Liberty Ammunition, Inc. v. United States*, 835 F.3d 1388, 1395–96 (Fed. Cir. 2016). "Terms of degree are problematic if their baseline is unclear to those of ordinary skill in the art." *Id*. While "post-*Nautilus* cases indicate that terms of degree are not 'inherently indefinite' in light of the Supreme Court's decision, we have recognized that claims having terms of degree will fail for indefiniteness unless they 'provide objective boundaries for those of skill in the art' when read in light of the specification and the prosecution history." *Id*. at 1395–96. Thus, when the asserted claims recite a "close proximity region" but fail to provide objective boundaries for what is "close" and what is not "close" (*i.e.,* the beginning and ending boundaries of that close proximity region), the claims are indefinite.

The '604 Patent provides ***some*** limited description of what a "close proximity region" may be, namely: (1) a close proximity region cannot be located at the feeding point (Dkt. 75, Ex. 2 at 3:8–9); (2) at least one arm of the dipole needs to be folded such that said folded arm approaches the other arm to form the close proximity region (*id.* at 2:24–26); and (3) the distance between two arms cannot be constant throughout the antenna. *Id*. With this scant description,

Fractus argues that one of skill in the art would be able to identify the metes and bounds of a "close proximity region." Dkt. 75 at 14–16.

However, Fractus's arguments do not describe objective criteria for determining the metes and bounds of such a region. Instead, Fractus's examples simply show the arbitrary way in which it seeks to apply the term. In particular, Fractus identifies two examples of close proximity regions which are the circled portions of Figure 2 labeled "200" and "201." Dkt. 75 at 15. The figures are reproduced below (with blue and red annotations added).

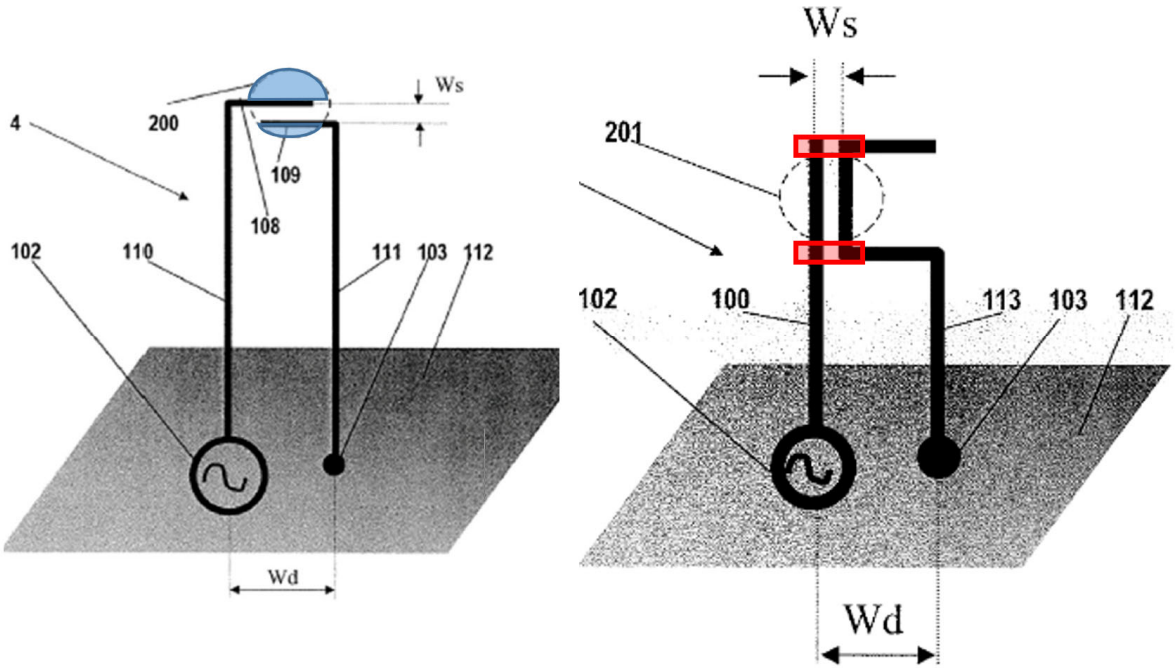

However, these figures do not inform a POSITA how to identify and measure a close proximity region. To the contrary, they further muddy the definition by identifying arbitrary circles (shown in Fractus's brief as dotted lines) which leave open how to treat the areas that fall within the circles but lie between the radiating arms. As shown above, there is a large space in the left image (outlined in blue) above the radiating antenna that is included in the close proximity region, but a smaller amount of space in the lower quadrant is included compared to the upper quadrant. In the right image, portions of the same antenna that are at the same distance

(outlined in red) are ***not*** part of the defined close proximity region. Fractus does not address, much less explain, ***why*** the areas identified in red in the right-hand image are not included as the "close proximity region"—and the patents do not explain it either. Therefore, a POSITA could arbitrarily determine borders of the close proximity region, which "improperly allows the scope to vary from day-to-day and from person-to-person." *See IQASR LLC v. Wendt Corp.*, 825 F. App'x 900, 907 (Fed. Cir. 2020) (internal quotations omitted).

Moreover, Fractus offers nothing beyond a single conclusory sentence argument as to why "coupled through a close proximity region" is not indefinite. *See* Dkt. 75 at 16 ("And it is this proximity that enables the coupling. Dr. Long agrees."). But in fact, Dr. Long's declaration is entirely silent on the matter, and Fractus does not otherwise explain ***how*** coupling is enabled by a close proximity region. Because "conclusory, unsupported assertions by experts as to the definition of a claim term are not useful," Fractus's argument in this regard should be given no weight. *Phillips*, 415 F.3d at 1318.

In fact, Dr. Long testified that no such identification of an objective boundary exists. When asked if there would be an endpoint to the close proximity, Dr. Long testified, "you know, there might be, might not be." Dkt. 75, Ex. 10 at 57:23–58:7. When asked "where would be the boundary of the proximity region? So you can take that measurement," he responded "[a]gain, I don't know anything. I'm not – have no opinion formed on distances if we're somewhere… if you really wanted an exact boundary of [] this immediately continuous effect, one would have to – in the context of the patent, one would have to go and see which portions of the coupling were necessary to perform the modifications on the radiation property to the antenna." *Id.* at 61:9–24. Thus, Dr. Long's purported definition lacks boundaries as well. The lack of reasonably certain

meaning and objective boundaries for a "close proximity region" renders those claims that use this term indefinite.

The lack of clarity for the beginning and end boundaries of the "close proximity region" is underscored when considering other Figures in the specification, not cited by Fractus, which would allegedly also include "close proximity regions." These other Figures show a variety of shapes of antennas that include complex shapes with portions of one antenna closer in proximity to the other antenna. For example, Figure 10 (reproduced to the right) shows various antennas but tellingly omits even the dashed circle that might identify a close proximity region. Each of these antennae ***perhaps*** have something that could be considered a "close proximity region." But how does a POSITA define the metes and bounds of the close proximity region in order to measure it? Again, the POSITA is left to subjectively draw that boundary in a manner that "improperly allows the scope to vary from day-to-day and from person-to-person." *See IQASR*, 825 F. App'x at 907 (internal quotations omitted).

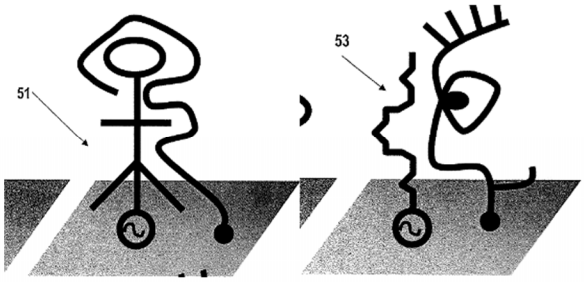

In sum, because there are no objective boundaries with which one could have reasonable certainty defining the "close proximity region" including the beginning and the end of the region, and because Fractus provides no explanation as to how "coupling" through such a region occurs, the Court should find these claim terms indefinite.

C. "hole(s) intersects the [external] perimeter"[3]

Patent and Claims	Defendants' Proposal	Fractus's Proposal
'092 Patent, claims 11, 32; '246 Patent, claims 18, 28.	Indefinite	Not indefinite No construction necessary.

As noted above in connection with the plain and ordinary meaning of "perimeter," Fractus argues that without imaginary extensions of the actual boundary of a shape, the patent claims that require a hole intersecting the perimeter would not have any discernible meaning. Defendants agree that the claim phrase "hole(s) intersects the [external] perimeter" lacks a definite meaning such that the Court should hold claims reciting this phrase indefinite.

As an initial matter, construction of this term is necessary because the "hole" and the "perimeter" each need to have a single meaning in order to determine whether, for example, "the hole has an area of at least 20% of an area included inside the external perimeter" as required by certain claims. *See*, *e.g.,* claim 1 of the '092 Patent.

Fractus points to Case 13 in Fig. 3 of the patent and says that the red dashed-line added in Fractus's brief shows a hole intersecting a perimeter. *See* Dkt. 75 at 8. Fractus's proposal introduces rather than reduces ambiguity. If a "perimeter" comprises any dotted line that can be drawn to connect the edges of the actual shape, it is unclear which of those of the dashed lines is the perimeter, and therefore what would be considered the size and shape of the imaginary hole(s):

[3] Claims 11 and 32 of the '092 Patent recite "external perimeter" and claims 18 and 28 of the '246 Patent recite "perimeter" in connection with essentially the same dependent claim elements.

Example A **Example B** **Example C** **Example D**

Indeed, any antenna can have a hole if one is allowed to draw any imaginary lines wherever and of whatever size. When a "hole" can mean anything, and "perimeter" includes any number of imaginary lines, then the terms lack reasonably certain meaning and are indefinite.

Accordingly, there is no objective boundary to what is a "hole," what is not a "hole," what the size of a "hole," might be, or how a "hole intersects a perimeter." This renders the phrase "hole(s) intersects the (external) perimeter" indefinite.

D. "4G Communication standard/ communication standard(s)" and "receive signals from a 4G communication standard"

Patent and Claims	Defendants' Proposal	Fractus's Proposal
"4G communication standard / communication standard(s)" ('103 Patent, claims 12, 16, 19, 20; '200 Patent, claims 1, 6, 11)	Indefinite	Not indefinite. No construction necessary.
"receive signals from a 4G communication standard" ('200 Patent, claim 1)	Indefinite	Not indefinite. No construction necessary.

As an initial matter, although Fractus holds Dr. Long out as one of skill in the art, he testified that he is "not [] an expert on standards, and that "I'm not involved with the standards or know anything about the particulars of the [] communication protocols for it." Dkt. 75, Ex. 10 at 8:2. Thus, even if he is qualified as a POSITA, Dr. Long's testimony on communication

standards should be given no weight in the indefiniteness analysis. Indefiniteness is assessed in light of the perspective of a person of ordinary skill in the art. *Nautilus*, 572 U.S. at 899.[4]

The applications to which the '103 Patent and '200 Patent claim priority were filed on July 18, 2006. The original claims in the application for the '103 Patent did not include any reference to "a 4G communication standard." Several years later, in ***2013***, Fractus presented new claims covering "a 4G communication standard." *See* **Exhibit E,** Amendment to Claims, July 17, 2013. Putting aside the issue as to whether this amendment in fact has support in the specification, the term "4G communication standard" must nevertheless be interpreted as of the effective ***filing date***. "Reciting an industry standard is acceptable if the standard was in existence when the patent application was filed." *Internet Machs. LLC v. Alienware Corp*., No. 6:10-cv-023, 2011 WL 13096501, at *3 (E.D. Tex. June 23, 2011) (citation omitted). Thus, Fractus's assertion that "[w]hether or not 4G standards had been fully codified as of 2006 is thus irrelevant" is incorrect. Dkt. 75 at 19.

In 2006, "4G communication standard" did not yet exist and therefore did not have a reasonably certain meaning. Indeed, the International Telecommunication Union (ITU) did not publish its set of requirements for IMT-Advanced until November 2008, which is considered by some to be "4G." **Exhibit F**, VIVINT0002686 (ITU report published in November 2008); **Exhibit G**, VIVINT0002768 (ITU December 6, 2010 Press Release stating, "[a]s the most advanced technologies currently defined for global wireless mobile broadband communications, IMT-Advanced is considered as "4G", although it is recognized that this term, while undefined, may also be applied to the forerunners of these technologies, LTE and WiMax, and to other

[4] Further, this Court is not bound to follow Dr. Long's testimony simply because it is unrebutted. *See, e.g., Diebold Nixdorf, Inc. v. ITC*, 899 F.3d 1291, 1302 (Fed. Cir. 2018) (rejecting unrebutted expert testimony that a term is structural).

evolved 3G technologies ….”). Additionally, the Third Generation Partnership Project (3GPP) through its Release 8 did not publish its set of requirements for 4G communication until 2008. **Exhibit H**,VIVINT0002694 (FCC Information Sheet from September 8, 2010 “is just beginning to see the introduction of the fourth generation (4G)… and the standard created and adopted by the Third Generation Partnership Project (3GPP) through its Release 8, is the closest standardization of the[] [4G] objectives.”).

Moreover, any meaning attributable to the term in 2006 would have evolved as “4G” technologies evolved and standards bodies continued to modify communication standards. Thus, although Fractus asserts that “after-arising technology” may be captured in the scope of a claim, (*see* Dkt. 75 at 18, 21), its argument that the term is therefore definite nevertheless lacks merit. To the contrary, the meaning of patent claims cannot be a moving target as technology evolves. *See Versata Software, Inc. v. Zoho Corp.*, 213 F. Supp. 3d 829, 838 (W.D. Tex. 2016). A person of ordinary skill would not have had a reasonably certain understanding of “4G communication standard” in 2006 because no such standard(s) existed at the time – and indeed, even ***Fractus*** did not include that term until several years afterwards.

Moreover, when Fractus added this new language, it did so to capture certain new claim scope. For example, claim 12 of the ’103 Patent requires that the second antenna element is “configured ***to operate in at least one frequency band used by a 4 G communication standard.***” Dkt. 75, Ex. 3, claim 12; *see also id.* claim 16 (“a third ***frequency band used by a 4 G communication standard***.”). Fractus is using the “4G communication standard” to define what frequencies are covered by its claims in 2013; but there is simply no way that a POSITA could have foreseen those frequencies in 2006.

Further, while the specifications reference "4G," they fail to provide a reasonably certain definition as to any applicable ***standard***. Rather, they offer an assortment of possibilities that, as Fractus describes, "are not exclusive as there may be 'additional frequency bands.'" Dkt. 75 at 19; *see also id.*, Ex. 3 at 24:26–27; Ex. 11 at 25:17–19. Thus, there appears to be no dispute that no 4G standard existed as of the filing date, and at that time, the identification of possible 4G ***standards*** remained undefined and unlimited in scope. Accordingly, references to the "4G communication standard" is indefinite.

Fractus also incorrectly relies on inapt case law in support of its "after-arising technologies" claim. *See Innogenetics N.V. v. AT&T Inc.*, NO. 6:09-cv-00294-LED-JDL, 2011 WL 738927 (E.D. Tex. Feb. 23, 2011). Rather, the Federal Circuit has held that terms cannot be moving targets by claiming a technology that is evolving or unfixed. *Icon Health & Fitness, Inc. v. Polar Electro Oy*, 656 F. App'x 1008, 1016 (Fed. Cir. 2016). In *Icon Health*, the Federal Circuit affirmed a ruling that patents covering "in-band communication" and "out-of-band communication" were indefinite. *Id.* Specifically, the Court noted that the meaning of the communication forms varied depending on which source was consulted, resulting in a moving target. *Id.* at 1015.

Similarly here, there was (and still is) no precise definition of 4G communication standard. As evidence, Fractus's own arguments state, "4G will ***likely*** require the following technologies: orthogonal frequency division multiplexing access (OFDMA); software-defined radio (SDR); Multiple Input/Multiple Output (MIMO); Interlayer Optimization; Handover and Mobility." Dkt. 75 at 20 (emphasis added). Again, from another source, Fractus argues that 4G communication standards "will include a ***variety*** of ***potential*** interworking access systems." *Id.* (emphasis added). Communication standards that "will likely require" and "will include a variety of

potential [] systems" do not provide a POSITA with reasonable certainty as to what is a 4G communication standard. *Nautilus*, 572 U.S. at 910–11. The moving target of the evolving 4G communication standard is thus indefinite.

Because "4G communication standard" did not have a reasonably certain meaning as at the filing of priority application for the patents, and because its meaning continues to evolve, the Court should find it to be indefinite.

Finally, Fractus fails to provide any meaningful argument about what "***receiving signals from*** a 4G communication standard" means. The only mention of this claim term is in a single footnote. Dkt. 75 at 18, fn. 8. The plain text of the claim language requires the antenna receive signals from a standard. This is indefinite because a standard is not capable of transmitting signals. Dr. Long's declaration and Fractus's opening brief avoid this issue entirely save a conclusory statement "without further elaboration." Dkt. 75 at 18; *id.*, Ex. 1 at ¶ 37. If "receiving signals from a 4G communication standard" has a plain and ordinary meaning such that a "standard" can transmit signals, Fractus should proffer evidence to this effect. It has not, and cannot do so, and therefore "***receiving signals from*** a 4G communication standard" is indefinite.

E. "complexity factor"

Patent and Claims	Defendants' Proposal	Fractus's Proposal
'103 Patent, claims 16, 20; '200 Patent, claims 1, 6, 11.	Indefinite	Not indefinite. No construction necessary. Alternatively: "a numerical value calculated using a formula that parametrizes the level of complexity of an antenna that captures and characterizes certain aspects of the geometrical details of the antenna contour."

Fractus asserts that the '103 and '200 Patents "supply clear guidance on the proper method for measuring and calculating the relevant 'complexity factors.'" Dkt. 75 at 22. Its expert has conspicuously failed to offer any opinion on the term. And Fractus's attorney arguments

simply demonstrate that the opposite is true: a POSITA is free to choose between ***multiple*** methods to derive the various numerical inputs when calculating a "complexity factor," which then result in ***materially different outcomes*** for the same antenna design. And, although the specification presents these multiple methods for a POSITA to choose from, it is wholly silent as to which proper method a POSITA ***should*** use. As Fractus itself acknowledges, the Federal Circuit has confirmed that a claim term invoking a calculated parameter in this manner is indefinite as a matter of law. *See* Dkt. 75 at 22 (quoting *Ball Metal Beverage Container Corporation v. Crown Packaging Technology, Inc.,* 2020 WL 7828776, *3–4 (Fed. Cir. 2020)). *See also Teva Pharms. USA, Inc. v. Sandoz, Inc.*, 789 F.3d 1335, 1341–45 (Fed. Cir. 2015) (finding claims indefinite because there were at least three ways to measure and report "molecular weight," each method producing different results, and a lack of guidance as to which specific method should be used).

In particular, the specification provides multiple methods for: (a) deriving the antenna contour, and (b) selecting the number of columns and rows for the grid overlaid on top of the antenna contour. Both of these are required inputs to compute the complexity factor values. Taking each of these in turn:

The "antenna contour" must be decided to begin the calculation of the complexity factor. In the case of a three-dimensional antenna, it is the two-dimensional representation of the planar and non-planar elements of the antenna, over which the POSITA constructs the grid G_2.[5] The specification teaches that the antenna contour is a series of segments comprised of several perimeter lengths. ***First***, it includes the perimeter of the planar antenna elements, as well as the

[5] The planar elements are those parts of the antenna that run along the two-dimensional plane of the face of the antenna with the largest area. The non-planar elements are those parts of the antenna that are, for example, folded or bent so that they run along a different plane.

perimeter of the closed slots or apertures within the planar antenna elements. These are the portions in Figure 3 that are highlighted in red as shown below:

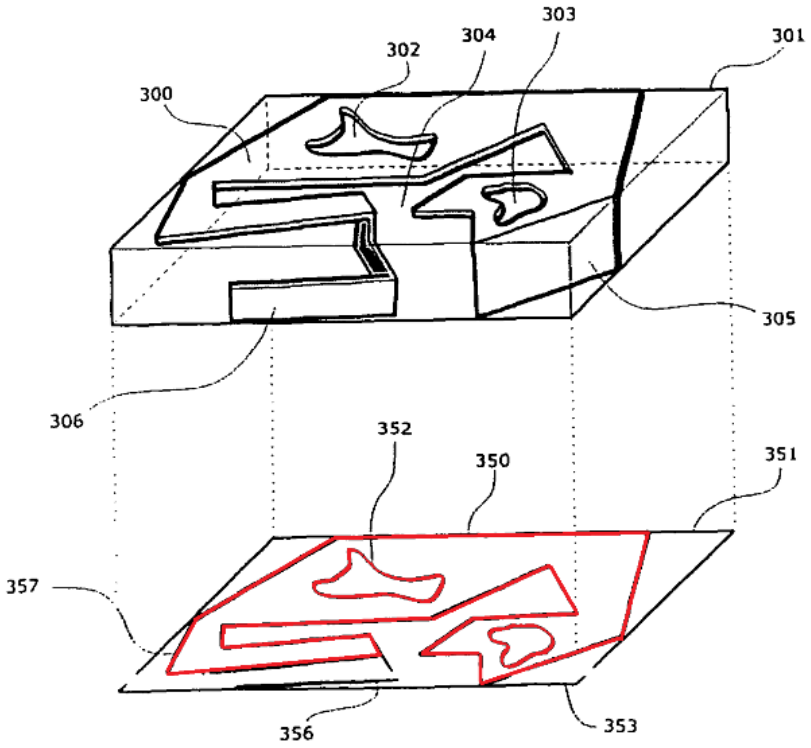

FIG. 3

Second, the antenna contour includes ***either*** the perimeter of the orthogonal projection of the non-planar antenna elements ***or*** the perimeter of the non-planer antenna elements that are placed in the antenna box but not in the antenna rectangle. The first of these two options is shown in the blue annotations in Figure 3.[6] The second of these two options is best extrapolated from Figure 4, as shown in the green annotations in the figure that appears immediately below it:

[6] Note that, in this example, the orthogonal projection of non-planar element 305 completely lines up with perimeter 357. *See e.g.,* Ex. 3 at 26:19–22.

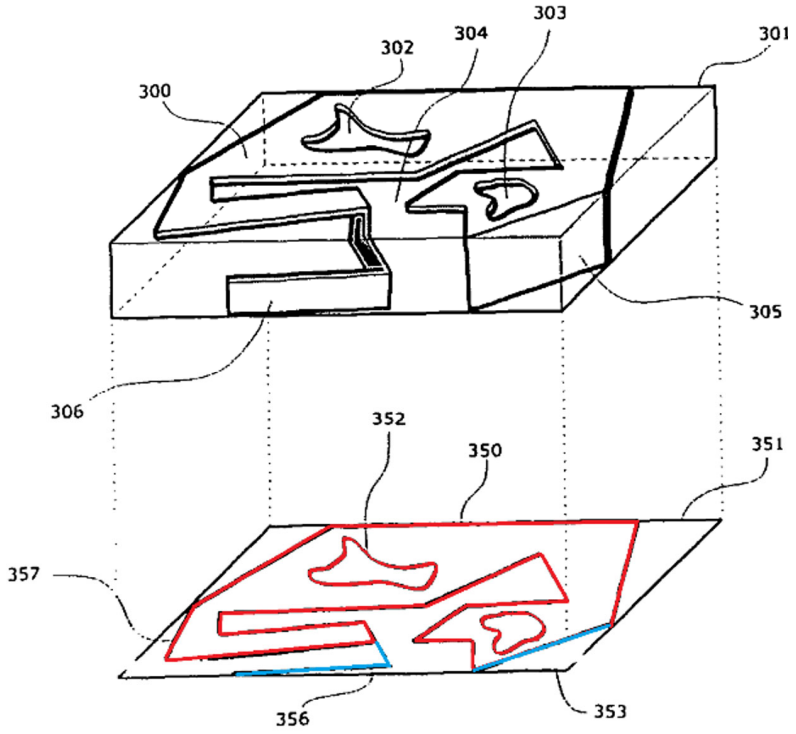
303
304
302
301
300
305
306
352
350
351
357
356
353

FIG. 3

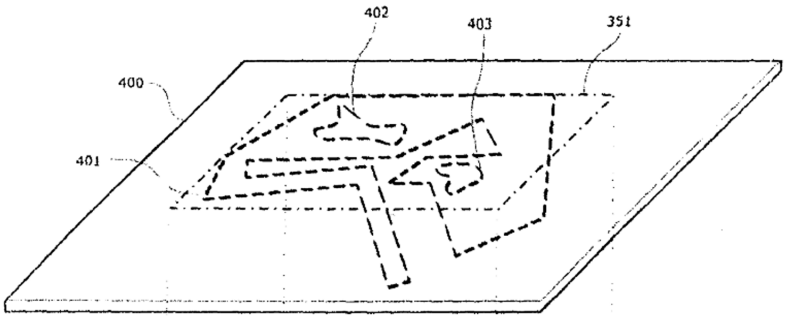
402
403
351
400
401

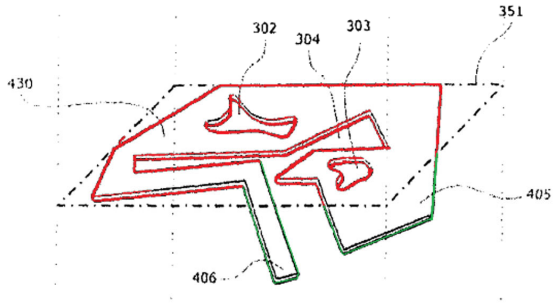
351
302
304
303
430
405
406

Thus, the POSITA is presented with multiple methods by which to derive the antenna contour: ***either*** [1] the perimeter of the planar elements (and apertures) and/or [2a] the orthogonal projection of the non-planar elements, ***or*** [1] the perimeter of the planar elements (and apertures) and/or [2b] the external perimeter of the non-planar elements. Fractus seemingly agrees with this characterization. *See* Dkt. 75 at 25 (*quoting id.* Ex. 3 at 14:49–59; Ex. 11 at 15:16–26, and annotating the same with steps [1], [**2**a], and [**2**b]) (emphasis added). And so, by Fractus's own admission, it is entirely valid for a POSITA to choose either option, even in the case of a single antenna. *See also id.* ("In the case of antennas not arranged on a two-dimensional plane . . . the antenna contour can be represented using ***either*** an orthogonal projection … ***or*** simply by including the perimeters of these nonplanar elements[.]") (emphasis added). In other words, the specification provides the POSITA with multiple ways to derive the antenna contour but provides no further guidance on which option is the "proper method" in any given instance. Therefore, a POSITA could validly derive two antenna contours that are fundamentally different in size and shape, simply by following the teachings of the specification. This is an irreconcilable ambiguity at the very heart of the "complexity factor" calculation because the antenna contour is a required input for the construction of grids G_1, G_2, and G_3, from which the N_1, N_2, and N_3 counts are derived and in turn input into the complexity factor equations for F_{21} and F_{32}. This choice leads to materially different outcomes, such that the same antenna may be infringing under one method but not infringing under the other.[7] That is improper as a matter of law.

[7] *See, e.g.,* **Exhibit I** (showing material differences between an antenna contour derived using the "orthogonal projection" option, as compared to the "external perimeter" option that Fractus selected in its infringement contentions for the accused Vivint Car Guard device). As Exhibit I shows, even the "external perimeter" option itself is open to multiple interpretations, further adding to the plurality of options available to a POSITA in deriving the antenna contour.

The same lack of clarity also applies to the selection and creation of the grids G_1, G_2, and G_3, which are overlaid over a chosen antenna contour. In its brief, Fractus glosses entirely over this fundamental step in the calculation process. *See* Dkt. 75 at 26 ("Each aspect of the complexity factors, including … how many columns and rows the grids should have … are laid out in the specifications themselves."); *see also id*. at 27, n. 14 (citing *id.* Ex. 3 at 17:5–18; Ex. 11 at 17:42–56). The specification does not provide reasonable certainty as to the preferred method for selecting the grid overlay.

The portion of the specification to which Fractus cites teaches that the number of columns for grid G_2 is preferably 9. *See* Dkt. 75, Ex. 3 at 17:12–16 (describing 9 columns as "an advantageous compromise, for the preferred sizes of an MFWD, and the corresponding available volumes for the antenna system[.]"). Fractus will presumably argue that this constrains the number of columns for grid G_2 (and therefore the size of G_1 and G_3, which are derived from G_2). Fractus will likely also argue that the POSITA is then also constrained when choosing the number of rows, since the specification teaches that where there are 9 columns, the POSITA is to select between 3, 5, 7, or 9 rows. *See, e.g., id.,* Ex. 3 at 17:36–38 ("Thus, the antenna rectangle is tessellated perfectly with 9 by (2n+ 1) cells of grid G_2 wherein n is an integer larger than zero (0) and smaller than five (5)."). Fractus may suggest that this gives a POSITA a definite starting point for grid G_2 and then derive the remaining inputs for the complexity factor calculation.[8] However, this elides the remaining vague and contradictory teachings in the specification.

[8] Fractus may argue that the POSITA is further constrained in choosing the number of rows based on which one results in an individual cell that is as close to square as possible. There is nothing in the specification that limits the POSITA's choice in this manner. Indeed, this silence is something that Fractus has exploited in its infringement contentions. *See* **Exhibit J** (showing that, in one instance in its infringement contentions against ADT, Fractus chose a grid G_2 that was 9x5 (with plainly rectangular cells) to allege infringement, when starting with a grid G_2 that

As an initial matter, the specification fails to clearly describe ***when*** the POSITA should start with the selection of 9 columns for grid G_2. Instead, the specification merely states that this is an "advantageous" starting point for the "preferred sizes" of a multi-function wireless device. *See* Dkt. 75, Ex. 3 at 17:12–16. But the patents are wholly silent as to how a POSITA would determine whether a particular MFWD is in fact a "preferred size." Indeed, the specification explicitly leaves open that a MFWD can be any size. *See, e.g., id.* at 1:31–35 ("In some cases, it may be desirable that the MFWD is either *e.g.* small while in other cases this is not of importance since *e.g.* a keyboard or screen is provided by the MFWD which already requires a certain size.") (emphasis added). Thus, the POSITA is in fact given ***no guidance*** as to when 9 columns for grid G_2 would be an appropriate choice to conduct the remaining calculations.

Moreover, the specification teaches elsewhere that a POSITA is in fact free to choose ***any*** number of columns or rows for grid G_2, so long as each is an odd number. *See, e.g.,* Dkt. 75, Ex. 3 at 16:58–62 ("As far as the second grid (or grid G_2) is concerned, the size of a cell and its aspect ratio (*i.e.,* the ratio between the width and the height of the cells) are first chosen so that the antenna rectangle is perfectly tessellated ***with an odd number of columns and an odd number of rows***.") (emphasis added). *See also, e.g., id.* at 17:32–35 and 17:46–50. In these instances, the POSITA is told, the preferable number of columns and rows is simply that which results in a grid whose individual cells are as square as possible. *Id.* at 17:19–23 ("Moreover, it is also advantageous to use cells that have an aspect ratio close to one. In other words, ***the number of columns and rows of cells of the second grid that tessellate the antenna rectangle are selected to produce a cell as square as possible***.") (emphasis added).

---

was 9x3 in size would have resulted in cells closer to a square in shape, but would have resulted in the same accused product ***not infringing*** the claim).

Thus, a POSITA following the specification is free to choose from a multiplicity of choices: start with 9 columns and jettison the requirement that the individual cells be as square as possible, or strive for cells that are as square as possible and therefore start with a number of columns that is not the "advantageous compromise" of 9. The specification is wholly silent about which methodology should be followed. Either method is valid, and in both cases the POSITA is being faithful to the teachings of the specification. The effects of this is laid out in **Exhibit K**. As shown therein, the creation of grid G_2 has lasting knock-on effects: the choice of the number of columns and rows determines, by extension, the sizes of grids G_1 and G_3; the resulting number of cells in each of these grids then forms the basis for the N_1, N_2, and N_3 counts that are derived from the grids; and that in turn leads to wholly different calculations of the F_{21} and F_{35} complexity factors. Thus, for the same antenna, a POSITA has multiple ways of reaching different outcomes, meaning the same antenna could infringe in one instance but not another. As set forth in *Ball Metal*, this renders "complexity factor" necessarily indefinite as a matter of law.

F. "grid dimension curve"

Having considered Fractus's alternative proposal and the arguments in Fractus's opening brief, and to reduce the number of disputes before this Court, ADT is willing to accept Fractus's alternative construction. Assuming that alternative construction is adopted, ADT is no longer contending that this claim term is indefinite.

V. CONCLUSION

For the foregoing reasons, the Court should adopt Defendants' constructions regarding the disputed terms.

Date: December 14, 2023

Respectfully Submitted,

/s/ Michael E. Zeliger

Steven Tepera (24053510)
Pillsbury Winthrop Shaw Pittman LLP
steven.tepera@pillsburylaw.com
401 Congress Avenue, Suite 1700
Austin, TX 78701-3797
Telephone: 512.580.9600
Fax: 512.580.9601

Michael E. Zeliger (*Lead Attorney*)
(*pro hac vice*)
Ranjini Acharya (*pro hac vice*)
Ayaka Hatori (24129120)
Pillsbury Winthrop Shaw Pittman LLP
michael.zeliger@pillsburylaw.com
ranjini.acharya@pillsburylaw.com
aya.hatori@pillsburylaw.com
2550 Hanover Street
Palo Alto, CA 94304-1115 USA
Telephone: 650.233.4500
Fax: 650.233.4545

David A. Simons (*pro hac vice*)
Pillsbury Winthrop Shaw Pittman LLP
david.simons@pillsburylaw.com
1650 Tysons Boulevard
14th Floor
McLean, VA 22102-4856 USA
Telephone: 703.770.7900
Fax: 703.770.7901

Theresa A. Roozen (*pro hac vice*)
Pillsbury Winthrop Shaw Pittman LLP
theresa.roozen@pillsburylaw.com
1200 17th St NW
Washington, DC 20036
Telephone: 202.663.8000
Fax: 202.663.8007

Attorneys for Defendant ADT LLC

MT2 LAW GROUP
MANN | TINDEL | THOMPSON

Andy Tindel (TX Bar 20054500)
112 E. Line Street, Suite 304
Tyler, Texas 75702
Tel: (903) 596-0900
Fax: (903)596-0909
Email: atindel@andytindel.com

FOLEY & LARDNER LLP

/s/ Andy Tindel
David. R. Wright (*Lead Attorney)*
Jared J. Braithwaite (*Admitted Pro Hac Vice*)
Michael Manookin (*Admitted Pro Hac Vice*)
Maren Laurence (*Admitted Pro Hac Vice)*
Foley & Lardner LLP
95 South State Street, Suite 2500
Salt Lake City, UT 84111
Telephone: (801) 401-8900
Facsimile: (385) 799-7576
Email: drwright@foley.com
Email: jbraithwaite@foley.com
Email: mmanookin@foley.com
Email: mlaurence@foley.com

J. Michael Thomas (*Texas Bar No. 24066812*)
Foley & Lardner LLP
2021 McKinney Avenue, Suite 1600
Dallas, TX 75201
Telephone: (214) 999-4734
Fax: (214) 999-3734
Email: jmthomas@foley.com

Attorneys for Defendant Vivint, Inc.

CERTIFICATE OF SERVICE

I hereby certify that on December 14, 2023, a copy of the foregoing document was served on all parties who have appeared in this case via the Court's CM/ECF system.

/s/ Michael E. Zeliger
Michael E. Zeliger

CERTIFICATE OF AUTHORIZATION TO FILE UNDER SEAL

I hereby certify that the foregoing document and exhibits thereto are being filed under seal pursuant to ¶ 16 of the Protective Order (Dkt. 45) entered in this matter.

/s/ Michael E. Zeliger
Michael E. Zeliger