IN THE UNITED STATES DISTRICT COURT
FOR THE EASTERN DISTRICT OF TEXAS
MARSHALL DIVISION

FRACTUS, S.A., Plaintiff, v. **VERIZON CONNECT INC., ET AL.**, Defendants.	Civil Action No. 2:24-CV-01009 **JURY TRIAL DEMANDED** (**LEAD CASE**)
FRACTUS, S.A., Plaintiff, v. **GEOTAB INC.**, Defendant.	Civil Action No. 2:24-CV-01008 **JURY TRIAL DEMANDED** (**MEMBER CASE**)

DEFENDANTS' PRELIMINARY INVALIDITY CONTENTIONS

I. INTRODUCTION

On March 12, 2025, Plaintiff Fractus, S.A. ("Fractus" or "Plaintiff") served Defendants Verizon Connect Inc. ("Verizon Connect"), Cellco Partnership d/b/a Verizon Wireless ("Verizon Wireless") (both Verizon entities together, "Verizon") and Geotab Inc. ("Geotab") (all three entities collectively, "Defendants") with its Disclosure of Asserted Claims and Infringement Contentions under Patent Rules 3-1 and 3-2, identifying infringement allegations for each of the Asserted Patents (hereafter, Fractus's "Infringement Contentions"), against Verizon and Geotab. Under Patent Rule 3-3 and 3-4, and the Amended Docket Control Order (Dkt. No. 41), Defendants hereby serve their Preliminary Invalidity Contentions for the following claims (collectively, the "Asserted Claims") and patents (collectively, the "Asserted Patents"):

- U.S. Patent No. 8,456,365 (the "'365 Patent"): Claims 1, 2, 4, 5, 6, 7, 8, 12, 13, 31, 32, 35, 36, 37, and 41 (the "'365 Asserted Claims")
- U.S. Patent No. 8,472,908 (the "'908 Patent"): Claim 1 (the "'908 Asserted Claim")[1]
- U.S. Patent No. 8,810,458 (the "'458 Patent"): Claims 1, 2, 3, 4, 7, 8, 9, 11,[2] 14, 15, and 17[3] (the "'458 Asserted Claims")
- U.S. Patent No. 11,031,677 (the "'677 Patent"): Claims 1, 2, 3, 4, 5, 6, 7, 8, 9, 12, 13, 14,[4] 15, 16, and 17 (the "'677 Asserted Claims")
- U.S. Patent No. 11,349,200 (the "'200 Patent"): Claims 1, 2, 3, 4, 6, 7, 9, 10, 11, 12, 13, 15, 17, and 19 (the "'200 Asserted Claims")[5]
- U.S. Patent No. 12,095,149 (the "'149 Patent"): Claims 1, 2, 3, 4, 5, 7, 8, 9, 10, 12, 13, 14, 15,[6] 17, 18, 19, and 20 (the "'149 Asserted Claims")

---

[1] The '908 Patent is only asserted against Verizon.

[2] '458 claim 11 is asserted only against Verizon.

[3] '458 claim 17 is asserted only against Geotab.

[4] '677 claim 14 is asserted only against Geotab.

[5] The '200 Patent is only asserted against Geotab.

[6] '149 claims 1-5 and 15 are asserted only against Geotab.

Fractus Exhibit 2002
Resmed v. Fractus
Page 2 of 109

Defendants contend that each claim identified by Fractus as allegedly infringed in the Infringement Contentions is invalid or unenforceable at least under one or more of 35 U.S.C. §§ 101, 102, 103, and 112.

Defendants make these contentions based on Fractus's Infringement Contentions as currently asserted and reserve all rights to revise, amend, and/or supplement their contentions should Fractus revise, amend, and/ or supplement its Infringement Contentions to the extent allowed by the Local Patent Rules or order of the Court.

These Preliminary Invalidity Contentions use the acronym "POSA" to refer to a person having ordinary skill in the art to which the alleged inventions of the Asserted Claims and Asserted Patents pertain.

A. General Reservations

Defendants reserve the right to revise or supplement these contentions in light of party and third-party discovery (such as product prior art and/or supporting documentation expected from third-parties), Fractus's revised, amended, or supplemental infringement contentions (if any), any claim construction order issued by the Court, review and analysis by expert witnesses, and further investigation and discovery regarding the defenses asserted by Defendants. For example, Defendants expressly reserve the right to amend these contentions after review of Fractus's amended infringement contentions (if any), after issuance of the claim construction order, should Fractus provide any information that it failed to provide in its disclosures, or if Fractus amends its disclosures in any way. Further, because discovery is ongoing, Defendants reserve the right to revise, amend, and/or supplement the information provided here, including identifying, charting, and relying on additional prior art references. Further, Defendants reserve the right to revise their final contentions concerning the invalidity of the Asserted Claims, which may change depending upon further and ongoing investigation, the construction of the Asserted

Fractus Exhibit 2002
Resmed v. Fractus
Page 3 of 109

Claims, and/or positions that Fractus or expert witnesses may take concerning claim construction, infringement, and/or invalidity issues.

Prior art not included in this disclosure, whether known or not known to Defendants, may become relevant. In particular, Defendants are currently unaware of the extent, if any, to which Fractus will contend that limitations of the Asserted Claims are not disclosed in the prior art identified by Defendants. To the extent that such an issue arises, Defendants reserve the right to identify other references that would anticipate and/or render obvious the allegedly missing limitations of the Asserted Claims. Defendants reserve the right to rely on any reference found in the prosecution histories of the applications leading to the Asserted Patents or otherwise identified in connection with this action. Defendants expressly incorporate herein any petitions for *inter partes* review that have been filed or will be filed forthcoming against the Asserted Patents and Asserted Claims, and any references cited therein filed against the Asserted Claims.

To the extent that the following contentions reflect constructions of claim limitations consistent with or implicit in Fractus's Infringement Contentions or proposed claim constructions, no inference is intended, nor should any be drawn that Defendants agree with Fractus's infringement allegations or claim constructions, and Defendants expressly reserve the right to contest such allegations and claim constructions. Defendants offer such contentions in response to Fractus's Infringement Contentions and its proposed and/or implicit claim constructions, and without prejudice to any position that Fractus may ultimately take as to any claim construction issues. Specifically, Defendants base these Preliminary Invalidity Contentions at least in part upon the claim scope and certain claim constructions that are implicitly or explicitly asserted by Fractus, and nothing herein should be construed or represented as

evidencing any express or implied agreement with any of Fractus's claim construction or infringement positions.

Defendants intend to rely on admissions concerning the scope of the prior art relevant to the Asserted Patents found in, *inter alia*: the Asserted Patents and related patents and/or patent applications; the patent prosecution histories for the Asserted Patents and related patents and/or patent applications (including all prior art cited therein); any deposition testimony of the named inventors on the Asserted Patents and related patents and/or patent applications in this matter or any other matter; evidence and testimony relating to the level of skill in the art; and the papers filed and any evidence submitted by Fractus in connection with this matter.

Defendants' claim charts cite to particular teachings and disclosures of the prior art as applied to features of the Asserted Claims. However, persons having ordinary skill in the art generally may view an item of prior art in the context of other publications, literature, products, and understanding. As such, the cited portions are only examples, and Defendants reserve the right to rely on uncited portions of the prior art references and on other publications, expert testimony, and other evidence as aids in understanding and interpreting the cited portions, as providing context thereto, and as additional evidence that the prior art discloses a claim limitation or any of the Asserted Claims as a whole. Defendants further reserve the right to rely on uncited portions of the prior art references, other publications, and testimony, including expert testimony, to establish bases for combinations of certain cited references that render the asserted claims obvious.

The references discussed in the claim charts may disclose the elements of the Asserted Claims explicitly and/or inherently, and/or they may be relied upon to show the state of the art in the relevant timeframe. The suggested obviousness combinations are provided in addition to

and/or in the alternative to Defendants' anticipation contentions and are not to be construed to suggest that any reference included in the combinations is not by itself anticipatory.

The following discussion and exhibits provide exemplary prior art citations and obviousness positions. The citations and discussions in the charts are organized by claim (and claim limitation) for convenience, but each limitation or claim section applies to the larger context of each claim, to any related dependent or independent claims, as well as all claims containing similar limitations or elements. For example, citations as to any recited limitation or component in the claims apply wherever each such limitation or component is repeated elsewhere in the claim or patent. Where Defendants cite to a particular drawing or figure in the attached claim charts, the citation encompasses the description of the drawing or figure, as well as any text associated with the drawing or figure. Similarly, where Defendants cite to particular text concerning a drawing or figure, the citation encompasses that drawing or figure as well. Relatedly, certain portions of patent or other prior art disclosures build upon other disclosures, even if they are referred to as a separate or alternative embodiment. Thus, Defendants' citations to structures or functions incorporate by references all disclosures to related structures or functions, including any additional detail provided as to the operation or design of those structures or functions.

Discovery is in its early stages. Defendants reserve the right to assert that the Asserted Claims are invalid under pre-AIA 35 U.S.C. § 102(f) in the event Defendants obtain additional evidence that the inventors of the Asserted Patents did not invent the subject matter claimed therein. Should Defendants obtain such evidence, they will provide the name of the person(s) from whom, and the circumstances under which, the alleged invention or any part of it was derived.

Fractus Exhibit 2002
Resmed v. Fractus
Page 6 of 109

B. Anticipation Under § 102

A patent claim is "anticipated" if each and every element of the claim was disclosed in a single prior art reference. *See SRI Int'l, Inc. v. Internet Sec. Sys., Inc.*, 511 F.3d 1186, 1192 (Fed. Cir. 2008) ("A [patent] claim is anticipated only if each and every element as set forth in the claim is found, either expressly or inherently described, in a single prior art reference," and affirming summary judgment of anticipation).

For pre-AIA patents, the standard is set forth in pre-AIA 35 U.S.C. § 102, reproduced in pertinent part:

> A person shall be entitled to a patent unless —
>
> (a) the invention was known or used by others in this country, or patented or described in a printed publication in this or a foreign country, before the invention thereof by the applicant for patent, or
>
> (b) the invention was patented or described in a printed publication in this or a foreign country or in public use or on sale in this country, more than one year prior to the date of the application for patent in the United States, or…
>
> (e) the invention was described in — (1) an application for patent, published under section 122(b), by another filed in the United States before the invention by the applicant for patent or (2) a patent granted on an application for patent by another filed in the United States before the invention by the applicant for patent, …. or….
>
> (g)(2) before such person's invention thereof, the invention was made in this country by another inventor who had not abandoned, suppressed, or concealed it.

To be anticipated, each element of a patent claim may be disclosed by a prior art reference either expressly or inherently. *SRI*, 511 F.3d at 1192. An element of a patent claim is inherent in a prior art reference if the element must necessarily be present and such would be recognized by one of ordinary skill in the art. *See Schering Corp. v. Geneva Pharms.*, 339 F.3d 1373, 1377 (Fed. Cir. 2003) ("[A] prior art reference may anticipate without disclosing a feature of the claimed invention if that missing characteristic is necessarily present, or inherent, in the single anticipating reference…. [A] court may consult artisans of ordinary skill to ascertain their understanding about

Fractus Exhibit 2002
Resmed v. Fractus
Page 7 of 109

subject matter disclosed by the prior art, including features inherent in the prior art."). "Inherency, however, may not be established by probabilities or possibilities." *Therasense, Inc. v. Becton, Dickinson & Co.*, 593 F.3d 1325, 1332 (Fed. Cir. 2010).

C. Obviousness Under § 103

A patent may not issue where "the differences between the subject matter sought to be patented and the prior art are such that the subject matter as a whole would have been obvious at the time the invention was made to a person having ordinary skill in the art to which said subject matter pertains." 35 U.S.C. § 103. That is, the claimed invention must be nonobvious. The legal test to determine the question of obviousness is expansive and flexible, and there is "need for caution in granting a patent based on the combination of elements found in the prior art." *KSR Int'l Co. v. Teleflex Inc.*, 550 U.S. 398, 415 (2007). The Supreme Court's *KSR* decision established the proper analysis for obviousness. *Id*. The Court loosened the standard for showing the obviousness of combining prior art references by overturning the Federal Circuit's rigid teaching-suggestion-motivation test as too narrow and reaffirming the *Graham* factors. *Id*. at 415, 419-21; *Graham v. John Deere Co.*, 383 U.S. 1, 17-18 (1966). In place of the fixed teaching-suggestion-motivation test, the Court held that a more expansive and flexible approach should be applied. *Id*. at 415. "Obviousness is a question of law based on underlying findings of fact." *In re Kubin*, 561 F.3d 1351, 1355 (Fed. Cir. 2009). The underlying factual inquiries are: (1) the scope and content of the prior art; (2) the differences between the prior art and the claims at issue; (3) the level of ordinary skill in the pertinent art; and (4) secondary considerations of non-obviousness. *See KSR*, 550 U.S. at 399 (citing *Graham*, 383 U.S. at 17-18).

In defining the obviousness standard, the Supreme Court stressed that "the results of ordinary innovation are not the subject of exclusive rights under the patent laws. Were it otherwise patents might stifle, rather than promote, the progress of useful arts." *KSR*, 550 U.S. at

Fractus Exhibit 2002
Resmed v. Fractus
Page 8 of 109

427; *see also id*. at 402 ("Granting patent protection to advances that would occur in the ordinary course without real innovation retards progress and may, for patents combining previously known elements, deprive prior inventions of their value or utility."). The Court also emphasized that its long-standing precedents confirm that "[t]he combination of familiar elements according to known methods is likely to be obvious when it does no more than yield predictable results." *Id*. at 416-17 (citing *Anderson's-Black Rock, Inc. v. Pavement Salvage Co*., 396 U.S. 57, 62 (1969); *Sakraida v. Ag Pro, Inc*., 425 U.S. 273, 282 (1976); *United States v. Adams*, 383 U.S. 39, 50-51 (1966)). Thus, the operative question when assessing whether a claimed invention would have been obvious is "whether the improvement is more than the predictable use of prior art elements according to their established functions." *KSR*, 550 U.S. at 417. Significantly, "[a] person of ordinary skill is also a person of ordinary creativity, not an automaton." *Id*. at 421. Indeed, beyond simple cases that merely require the combination of two prior art references, "a person of ordinary skill [often] will be able to fit the teachings of multiple patents together like pieces of a puzzle." *Id*. at 420.

The rationale to combine prior-art references can come from a variety of sources and is not limited to the prior art itself or the specific problem the patentee was trying to solve. *Id*. at 420. Furthermore, the Supreme Court's expansive approach in *KSR* encourages, rather than restricts, the use of common sense when addressing obviousness. *Id*. at 421. The references themselves need not provide a specific hint or suggestion of the alteration needed to arrive at the claimed invention; the analysis "may include recourse to logic, judgment, and common sense available to the person of ordinary skill that do not necessarily require explication in any reference or expert opinion." *Perfect Web Techs., Inc. v. InfoUSA, Inc*., 587 F.3d 1324, 1329 (Fed. Cir. 2009). And the "reason, suggestion, or motivation to combine may be found explicitly

Fractus Exhibit 2002
Resmed v. Fractus
Page 9 of 109

or implicitly: 1) in the prior art references themselves; 2) in the knowledge of those of ordinary skill in the art that certain references, or disclosures in those references, are of special interest or importance in the field; or 3) from the nature of the problem to be solved . . . ." *Ruiz v. A.B. Chance Co*., 234 F.3d 654, 665 (Fed. Cir. 2000). A claim can also be proven obvious by showing that the combination of elements was "obvious to try"—for example, "[w]hen there is a design need or market pressure to solve a problem and there are a finite number of identified, predictable solutions, a person of ordinary skill has good reason to pursue the known options within his or her technical grasp. If this leads to the anticipated success, it is likely the product not of innovation but of ordinary skill and common sense. In that instance the fact that a combination was obvious to try might show that it was obvious under § 103." *KSR*, 550 U.S. at 421. And "[i]f a person of ordinary skill can implement a predictable variation, § 103 likely bars its patentability." *Id*. at 417.

Applying the obviousness test is particularly straightforward in cases that involve "the simple substitution of one known element for another or the mere application of a known technique to a piece of prior art ready for the improvement." *Id*. at 417. In such cases, the simple substitution of a single element must achieve unexpected results in order to patentable—that is, "when a patent claims a structure already known in the prior art that is altered by the mere substitution of one element for another known in the field, the combination must do more than yield a predictable result." *Id*. at 416 (citing *Adams*, 383 U.S. at 50-51)).

Much the same evidence that demonstrates a reason or motivation to combine often also demonstrates that a POSA would have had a reasonable expectation of success. Where "the evidence of motivation to combine…and the evidence of reasonable expectation of success significantly overlap… it was reasonable for the Board to look to this same evidence and

Fractus Exhibit 2002
Resmed v. Fractus
Page 10 of 109

conclude that a POSA would have reasonably expected the… benefit that motivated him to combine the references in the first instance." *Transtex Inc. v. Vidal*, No. 2020-1140, 2023 WL 1487425, at *5 (Fed. Cir. Feb. 3, 2023). And "*KSR* does not require an explicit statement of a reasonable expectation of success in every case." *Merck & Cie v. Gnosis S.P.A.*, 808 F.3d 829, 836-37 (Fed. Cir. 2015); *KSR*, 550 U.S. at 421 ("Rigid preventative rules that deny factfinders recourse to common sense… are neither necessary under our case law nor consistent with it."). It is often the case that "[i]n light of the concrete, specific teachings of [the references], artisans in this field… had… every reasonable expectation of success in achieving… the claimed invention." *In re Kubin*, 561 F.3d 1351, 1360-61 (Fed. Cir. 2009).

That expectation of success need only be "reasonable," and the "law makes clear that it does not *require* a certainty of success." *Medichem, S.A. v. Rolabo, S.L.*, 437 F.3d 1157, 1165 (Fed. Cir. 2006) (emphasis original). "[I]f a technique has been used to improve one device, and a [POSA] would recognize that it would improve similar devices in the same way, using the technique is obvious unless its actual application is beyond his or her skill." *KSR*, 550 U.S. at 417. *See Trs. of Columbia Univ. v. Illumina, Inc.*, 620 Fed. App'x 916, 929 (Fed. Cir. 2015) (affirming reasonable expectation of success where "every step" of claimed process was "within the level of ordinary skill" and challenged patent's specification "does not provide additional guidance"). Whether called out expressly or not in these contentions and charts, Defendants' discussion and evidence of reasons or motivations to modify or combine references also demonstrate that a POSA would have had a reasonable expectation of success. Fractus and the Court should understand any assertions as to reasons or motivations to modify or combine references to also include the assertion that the same evidence demonstrates a POSA would have had a reasonable expectation of success.

II. ’365 PATENT

A. Priority Date

The Asserted Claims of the ’365 Patent are not entitled to a priority date earlier than the ’365 Patent’s actual filing date (i.e., Aug. 13, 2008). Despite having the burden of proof, Fractus has offered no evidence that the ’365 Patent is entitled to an earlier priority date. Defendants understand, however, that Fractus maintains in its Infringement Contentions that the Asserted Claims of the ’365 Patent are entitled to an earlier priority date of December 5, 2003. While Fractus has offered no evidence for that priority date, and Defendants do not agree with it, the relevant prior art discussed below pre-dates that earlier alleged priority date.

B. Relevant Prior Art

Defendants identify the following prior art known to Defendants to anticipate or render obvious the ’365 Patent under at least pre-AIA 35 U.S.C. §§ 102(a), (b), (e), and/or (g), either expressly or inherently as understood by a POSA, or based on Fractus’s apparent interpretation of the claims.

1. Patents and Printed Publications

The following patents and patent application publications constitute prior art to the ’365 Patent at least under pre-AIA 35 U.S.C. § 102(e) because they are issued patents or patent applications that name another inventor and were effectively filed before either of August 13, 2008 and December 5, 2003. Some of these patents and publications are also prior art under pre-AIA §§ 102(a) and (b) because they issued or published before either of August 13, 2008 or December 5, 2003, including in some instances more than a year prior to those dates under § 102(b).

- U.S. Patent No. 5,596,401 (“Kusuzawa”), issued January 21, 1997, and filed September 14, 1994

Fractus Exhibit 2002
Resmed v. Fractus
Page 12 of 109

- U.S. Patent No. 5,828,348 ("Tassoudji"), issued October 27, 1998, and filed September 22, 1995
- U.S. Patent No. 6,005,519 ("Burns"), issued December 21, 1999, and filed September 4, 1996
- U.S. Patent No. 6,008,774 ("Wu"), issued December 28, 1999, and filed March 18, 1998
- U.S. Patent No. 6,184,833 ("Tran"), issued February 6, 2001, and filed June 4, 1998
- U.S. Patent No. 6,218,989 ("Schneider"), issued April 17, 2001, and filed August 8, 1996
- U.S. Patent No. 6,233,464 ("Chmaytelli"), issued May 15, 2001, and filed May 14, 1999
- U.S. Patent No. 6,268,831 ("Sanford"), issued July 31, 2001, and filed April 4, 2000
- U.S. Patent No. 6,292,154 ("Deguchi"), issued September 18, 2001, and filed February 23, 1999
- U.S. Patent No. 6,307,525 ("Bateman"), issued October 23, 2001, and filed February 21, 2001
- U.S. Patent No. 6,380,905 ("Annamaa"), issued April 30, 2002, and filed September 8, 2000
- U.S. Patent No. 6,459,413 ("Tseng '413"), issued October 1, 2002, and filed January 10, 2001
- U.S. Patent No. 6,498,586 ("Pankinaho"), issued December 24, 2002, and filed December 27, 2000
- U.S. Patent No. 6,665,927 ("Dow"), issued December 23, 2003, and filed December 29, 1999
- U.S. Patent No. 6,717,551 ("Desclos"), issued April 6, 2004, and filed November 12, 2002
- U.S. Patent No. 6,774,850 ("Chen"), issued August 10, 2004, and filed September 18, 2002
- U.S. Patent No. 6,781,553 ("Iguchi"), issued August 24, 2004, and filed August 6, 2001

- U.S. Patent No. 6,956,530 ("Kadambi"), issued October 18, 2005, and filed December 9, 2002
- U.S. Patent No. 7,245,196 ("Baliarda"), issued July 17, 2007, and filed January 19, 2000
- U.S. Patent Application Publication No. 2001/0011964 A1 ("Sadler"), published August 9, 2001, and filed January 19, 2001
- U.S. Patent Application Publication No. 2002/0011953 A1 ("Reece"), published January 31, 2002, and filed October 8, 1999
- U.S. Patent Application Publication No. 2002/0089453 A1 ("Tseng"), published July 11, 2002, and filed January 10, 2001
- U.S. Patent Application Publication No. 2002/0158806 A1 ("Caimi"), published October 31, 2002, and filed April 10, 2002
- U.S. Patent Application Publication No. 2003/0006936 A1 ("Aoyama"), published January 9, 2003, and filed June 14, 2002
- U.S. Patent Application Publication No. 2003/0092420 A1 ("Sugimoto"), published May 15, 2003, and filed October 9, 2002
- U.S. Patent Application Publication No. 2003/0124982 A1 ("Saari"), published July 3, 2003, and filed October 31, 2002
- U.S. Patent Application Publication No. 2003/0156065 A1 ("Jo"), published August 21, 2003, and filed December 27, 2002
- U.S. Patent Application Publication No. 2003/0231139 A1 ("Tai"), published December 18, 2003, and filed November 18, 2002
- U.S. Patent Application Publication No. 2004/0017314 A1 ("Petropolous"), published January 29, 2004, and filed July 29, 2002
- U.S. Patent Application Publication No. 2004/0051672 A1 ("Nevermann"), published March 18, 2004, and filed October 5, 2001
- U.S. Patent Application Publication No. 2004/0052272 A1 ("Frank"), published March 18, 2004, and filed September 12, 2002
- U.S. Patent Application Publication No. 2004/0070541 A1 ("Andersson"), published April 15, 2004, and filed December 14, 2001
- U.S. Patent Application Publication No. 2004/0080457 A1 ("Guo"), published April 29, 2004, and filed October 28, 2002

- U.S. Patent Application Publication No. 2004/0135729 A1 ("Talvitie"), published July 15, 2004, and filed October 23, 2003

- U.S. Patent Application Publication No. 2004/0150561 A1 ("Tillery"), published August 5, 2004, and filed January 31, 2003

- U.S. Patent Application Publication No. 2004/0198293 A1 ("Sadler293"), published October 7, 2004, and filed December 17, 2002

- International PCT Publication No. WO 1999/003166 A1 ("Gamalielsson"), published January 21, 1999, and filed May 14, 1998

- International PCT Publication No. WO 2001/061782 A1 ("Drogou"), published August 23, 2001, and filed February 19, 2001

- International PCT Publication No. WO 2001/065636 A1 ("Hu"), published September 7, 2001, and filed February 20, 2001

- International PCT Publication No. WO 2002/087294 A1 ("Chua"), published October 31, 2002, and filed March 28, 2002

- Japanese Patent Publication No. JP2002/319816 A ("Suyama"), published October 31, 2002, and filed April 24, 2001

- Japanese Patent Publication No. JPH10163733A ("Camp, Jr."), published June 19, 1998, and filed October 13, 1997

- A. Strugatsky & C.H. Walter, "Multimode Multiband Antenna," [1992] Proceedings of the Tactical Communications Conference, Fort Wayne, IN, USA, 1992, pp. 281-295 vol.1, doi: 10.1109/TCC.1992.247135

- C. Chiu et al., "Shorted, folded planar monopole antenna for dual-band mobile phone." Electronics Letters, vol. 39, no. 18, 2003, pp. 1301-1302

- D. Pozar, Microwave Engineering (John Wiley & Sons, Inc., 3rd ed. 2005) (Excerpts)

- F.B. Beck et al., "Horn Antenna With V-Shaped Corrugated Surface", NASA Tech. Brief, Report No. LAR-11112 (January 1975)

- P. Teng et al., "PIFA with a Bent, Meandered Radiating Arm for GSM/DCS Dual-Band Operation." IEEE Antennas and Propagation Society International Symposium. Digest. Held in conjunction with: USNC/CNC/URSI North American Radio Sci. Meeting (Cat. No.03CH37450), Columbus, OH, USA, vol. 3, 2003, pp. 107-110, doi: 10.1109/APS.2003.1219801

- P.L. Teng & K.L. Wong, "Planar monopole folded into a compact structure for very-low-profile multiband mobile-phone antenna," Microwave and optical technology letters, 33(1), 22-25 (April 5, 2002)
- R. Graf, Modern Dictionary of Electronics (Newnes: 7th ed. 1999) (Excerpts)
- S. Gilbilisco, ed., The Illustrated Dictionary of Electronics (McGraw-Hill: 8th ed. 2001) (Excerpts)

2. Prior Art Products or Systems

The following products or systems constitute prior art to the '365 Patent (collectively, the "'365 Prior Art Products") under at least pre-AIA 35 U.S.C. §§ 102(a), (b) and/or (g)(2) because they were known or used by others, in public use or on sale, or invented by another in this country prior the '365 Patent's priority date, or in the case of § 102(b) more than a year before that date:

- Nokia 6100
- Nokia 3650
- Sony Ericsson T61LX
- Blackberry 6710
- Blackberry 6750
- Sony Ericsson T600

As reflected in the accompanying claim charts and exhibits, each of the '365 Prior Art Products qualifies as prior art under § 102 because it was either: (1) known or used by others, in public use, on sale, or otherwise available to the public in the United States before the alleged priority date, or (2) reduced to practice in the United States before the alleged priority date without being abandoned, suppressed, or concealed. To the extent the '365 Patent is not entitled to the alleged priority date but instead to later priority dates, each of the '365 Prior Art Products qualifies under pre-AIA § 102 or AIA § 102 for the same reasons as to those later priority dates.

To support the substantive disclosure and status is prior art for each of the ’365 Prior Art Products, Defendants reserve the right to rely on the following sources of evidence, including those sources expressly cited in the accompanying claim charts and exhibits:

- Samples, teardowns, diagrams, images, and the like, including any such materials Defendants or third parties have or will produce or make available for inspection;
- Documents relating to the prior art products, including any documents Defendants or third parties have produced or will produce;
- Testimony of Defendants’ or third parties’ employees and former employees;
- Fractus’s Infringement Contentions and expert reports and testimony in the current case or prior cases; and
- Defendants’ expert reports and testimony.

Defendants reserve the right to rely on other sources of evidence identified as discovery in Defendants’ investigation progresses.

C. Anticipation and Obviousness

Defendants attach Exhibit A-01 through A-09, which provide exemplary disclosures showing how the prior art anticipates and/or renders obvious the ’365 Asserted Claims. The charts identify primary references, and, in some cases, secondary references, and anticipation and obviousness contentions. Defendants may rely on any of the primary references identified in Exhibits A-01 through A-09, in combination with any secondary reference identified in those exhibits, as well as in Section II.B supra. Those exhibits also identify each such combination, and the motivation to combine such items with a reasonable expectation of success.

In addition, Defendants incorporate by reference the petitions, petitioner papers, and arguments in *Inter Partes* Review No. IPR2025-00928 (filed by Geotab April 30, 2025), as well as any future *Inter Partes* Reviews and *Ex Parte* Reexaminations, and all documents cited or referenced therein, which challenge the validity of the ’365 patent.

By way of particular example, and not limitation, the ’365 Asserted Claims would have been anticipated or obvious under pre-AIA §§102-103 based on each of the following references or combinations of references, as reflected and discussed in the accompanying claim charts:

- **Tseng (addressed in Exhibit A-01)**
- **Guo (addressed in Exhibit A-02)**
- **Gamalielsson (addressed in Exhibit A-03)**
- **Tran, alone or in view of Teng (addressed in Exhibit A-04)**
- **Sony Ericsson T600 (addressed in Exhibit A-05)**
- **Nokia 6100 (addressed in Exhibit A-06)**
- **Nokia 3650 (addressed in Exhibit A-07)**
- **Sony Ericsson T61LX (addressed in Exhibit A-08)**
- **Blackberry 6750 (addressed in Exhibit A-09)**

D. Invalidity Under 35 U.S.C. § 112

1. Indefiniteness

a. “grid-dimension curve”

“[G]rid dimension curve” as recited in claims 1, 7, 8, and 31 of the ’365 Patent is indefinite. The specification does not define or provide sufficient explanation for what is meant by the term “grid-dimension curve.” The specification indicates that “[i]n addition to space-filling curves, the curves described herein can also be grid dimension curves” as exemplified by the curves depicted in Figures 16, 17, 18, and 19. However, these images depict hypothetical radiating arms in one plane. In contrast, the claims cover ***non-planar*** portions of a radiating arm that are “shaped according to a grid dimension curve.” Claims 1 and 31 recite a non-planar radiating arm that is “at least partially,” or includes a “section” that is, “shaped according to a grid dimension curve.” This claim language encompasses both planar and non-planar parts or

Fractus Exhibit 2002
Resmed v. Fractus
Page 18 of 109

"sections" of a radiating arm that are "shaped according to a grid dimension curve." Yet, the Figures fail to render, and the specification fails to describe, how to calculate grid-dimension curves for a non-planar part of a radiating arm as encompassed by the claims. These differences can and do result in the same antenna either meeting or not meeting the claim limitation. As a result, the term "grid-dimension curve" is indefinite for being unclear, vague, and ambiguous for failing to provide reasonable certainty concerning the scope of the claimed invention. The claims in which this term appears (whether directly or via dependency) are thus invalid.

2. Lack of Written Description

The '365 Asserted Claims do not comply with the first paragraph of § 112 because the specification does not "contain a written description of the invention, and of the manner and process of making and using it, in such full, clear, concise, and exact terms as to enable any person skilled in the art to which it pertains, or with which it is most nearly connected, to make and use the same." In particular, the '365 Patent fails to provide adequate written description support for claims 1, 7, 8, and 31. As described above, the specification does not include reference to "grid-dimension curve." Accordingly, the claims in which this term appears (whether directly or via dependency) are invalid for lack of written description support in the specification.

The '365 Patent also fails to provide adequate written description support for claims 1 and 31 as to the claimed combination of antenna features. Claims 1 and 31 of the '365 Patent require: (1) a multi-band antenna arranged inside the device housing with the printed circuit board and communication circuitry, and (2) the multi-band antenna includes a first radiating arm having portions arranged on different planes. However, the '365 Patent does not disclose a device having this combination of features. Moreover, these features were added to the claims by amendment during prosecution and thus do not have support as original claims filed with the

Fractus Exhibit 2002
Resmed v. Fractus
Page 19 of 109

application. Thus, claims 1 and 31 lack written description support and are invalid under pre-AIA 35 U.S.C. § 112, ¶ 1, as are all claims depending from them.

a. Antenna Arranged Inside the Device Housing

Claims 1 and 31 of the '365 Patent each recite, *inter alia*, "wherein the printed circuit board, the communication circuitry, and the multi-band antenna are arranged inside the device housing." This type of antenna was known as an "internal" antenna. Examples of mobile communication devices having a printed circuit board, communication circuitry, and a multi-band antenna arranged inside a device housing are shown in FIGs. 11-14 of the patent. *See, e.g.*, Fig. 13, item 201.

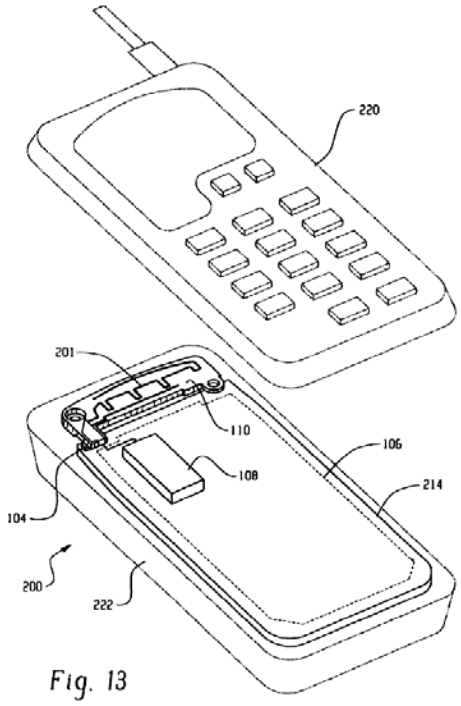

Fig. 13

Each antenna shown arranged inside the device housing has radiating arms that are on a single plane.

b. Radiating Arm Arranged on Different Planes

Claim 1 further recites "at least a portion of the first radiating arm and at least a portion of the second radiating arm are arranged on different planes." Claim 31 further recites "a first radiating arm arranged on two or more surfaces of… the dielectric mounting structure."

An example of an antenna having a radiating arm arranged on different planes is shown in FIGs. 21a-21c (note how the meandering part 320 of the arm wraps around at 324 to run underneath the meandering part at 316):

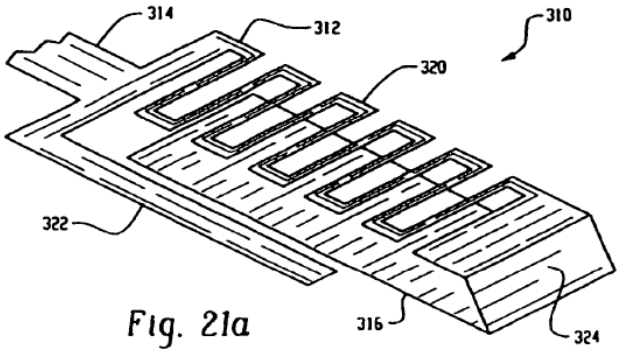

Fig. 21a

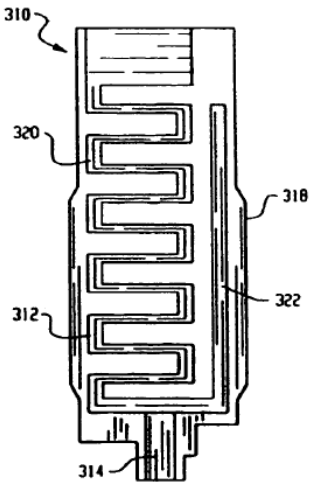

Fig. 21b

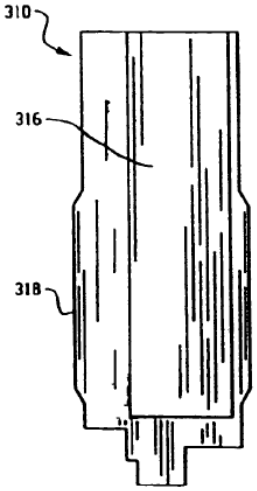

Fig. 21c

The '365 Patent discloses that the type of antenna shown in FIGs. 21a-21b would have been disposed in an antenna housing, shown in FIG. 24 below, that can be affixed to a mobile communication device:

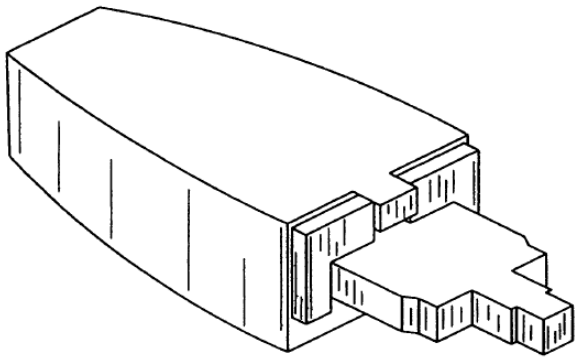

Fig. 24

"FIG. 24 shows an example of an antenna housing that any one of the antennas described above could be fitted within. Such an antenna housing could be affixed, for example, to a candy bar type mobile communication device, to a clam-shell type mobile communication device, to a gaming device, or to a PDA." (9:65-10:3). The brief description of drawings states: "FIG. 24 is an example of an external antenna housing that might be fitted with one of the described antennas."

The '365 Patent does not show the antenna housing being affixed to a mobile communication device. However, the background section of the '365 Patent distinguishes between internally-mounted and externally-mounted antennas, conceding that grid dimension antennas were known for use as externally-mounted antennas.

Moreover, the structure shown in FIGs. 21 and 24 would have been recognized by one of ordinary skill in the art as affixing to a mobile communication device in the manner shown in the prior art below:

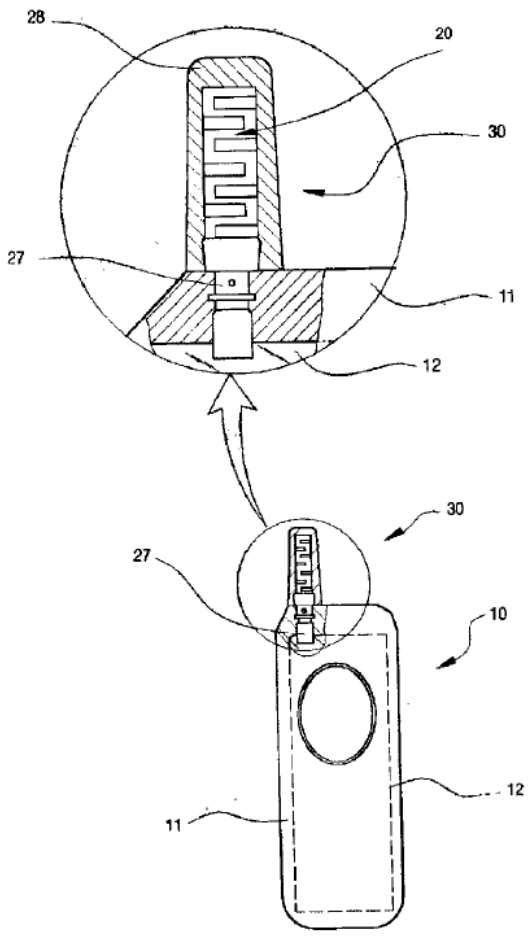

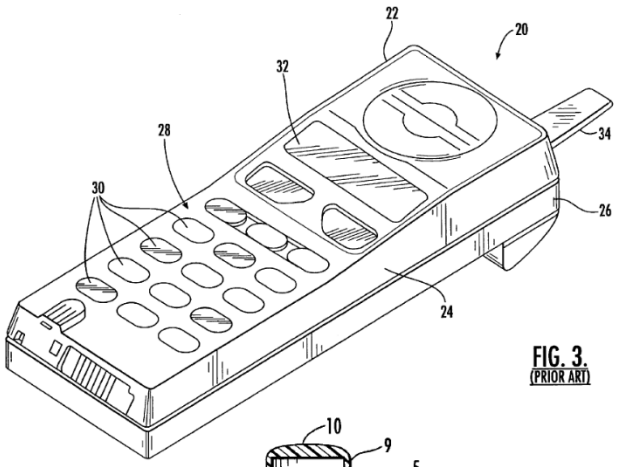

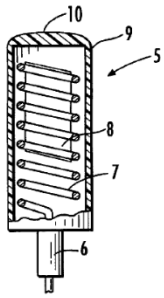

Left: US 2003/0214440, published Nov. 2003; **Right**: US 6,124,831, published Sep. 2000

c. The As-Filed ’365 Patent Did Not Disclose Non-Planar, Internal Antennas.

As discussed above, the ’365 Patent provides no examples in which an antenna with a radiating arm on different planes or surfaces is disposed within the device housing with the communication circuitry and printed circuit board.

Moreover, the parts of the ’365 Patent that disclose these limitations are isolated from one another within the patent. The first substantive paragraph of the patent description reads “[t]his invention relates generally to the field of multi-band monopole internal ***and external*** antennas,” delineating the different internal and external antenna embodiments disclosed. The first 19 figures (showing an internal, single-plane antenna) were included in the PCT application,

filed Dec. 22, 2002, of which the 365 Patent's parent was a continuation-in-part. The latter figures 20-24 (showing an external, non-planar antenna) first appeared in the provisional application filed January 30, 2004, to which the 365 Patent's parent claimed priority when filed. There is no language in the earlier embodiments linking to the later embodiments.

The only statement that might be construed as joining the two sections of the description is the following statement in connection with the later embodiments: "[t]hese multiple conductor, double-sided, double-surface antenna arrangements ***include all the aspects of the multi-band monopole antennas discussed above*** including, but not limited to, the physical properties of the substrate and conductive materials." '365 Patent at 8:15-19. However, this statement is too general. And, there is no reason the use of the same materials to make the external antennas of the latter figures would have been understood as rendering them usable within the device housing as in the earlier figures.

The original claims of the application that matured into the '365 Patent were directed to "an antenna for use in a mobile communication device" that included conductors on different sides of a substrate. An original dependent claim recited "[a] housing for use with a mobile communication device containing the antenna of claim…" The original and granted claims of the parent application/patent (U.S. Patent No. 7,423,592) recited similar limitations.

The original dependent claims were thus directed only to the examples shown in FIGs. 21 and 24 above, which are antennas "for use in a mobile communication device." The "housing for use with a mobile communication device" is the housing shown in FIG. 24. It is the "housing" in the claim, not the mobile communication device, that contains "the antenna" of the independent claim.

Fractus Exhibit 2002
Resmed v. Fractus
Page 24 of 109

Thus, claims 1 and 31 of the ’365 Patent lack written description support in the application as-filed, and are thus invalid under pre-AIA 35 U.S.C. § 112, ¶ 1.

Accordingly, the claims in which this term appears (whether directly or via dependency) are invalid for lack of written description support in the specification.

III. ’908 PATENT

A. Priority Date

The Asserted Claims of the ’908 Patent are not entitled to a priority date earlier than the ’908 Patent’s actual filing date (i.e., Aug. 2, 2006). Despite having the burden of proof, Fractus has offered no evidence that the ’908 Patent is entitled to an earlier priority date. Verizon[7] understands, however, that Fractus maintains in its Infringement Contentions that the Asserted Claims of the ’908 Patent are entitled to an earlier priority date of April 3, 2006. While Fractus has offered no evidence for that priority date, and Verizon does not agree with it, the relevant prior art discussed below pre-dates that earlier alleged priority date.

B. Relevant Prior Art

Verizon identifies the following prior art known to Verizon to anticipate or render obvious the ’908 Patent under at least pre-AIA 35 U.S.C. §§ 102(a), (b), (e), and/or (g), either expressly or inherently as understood by a POSA, or based on Fractus’s apparent interpretation of the claims.

1. Patents and Printed Publications

The following patents and patent application publications constitute prior art to the ’908 Patent at least under pre-AIA 35 U.S.C. § 102(e) because they are issued patents or patent applications that name another inventor and were effectively filed before either of August 2,

[7] The ’908 Patent is only asserted against Verizon.

2006 or April 3, 2006. Some of these patents and publications are also prior art under pre-AIA §§ 102(a) and (b) because they issued or published before either of, including in some instances more than a year prior to those dates under § 102(b).

- European Patent Publication No. EP0604338 B1 ("Brachat"), published on March 4, 1998, and filed on December 20, 1993.
- European Patent Publication No. EP1280231 A1 ("Ku"), published on January 29, 2003, and filed on July 26, 2001.
- Swedish Patent Publication No. SE525659 C2 ("Krebs"), published on March 29, 2005, and filed on July 11, 2003.
- U.S. Patent No. 5,493,311 ("Itoh"), issued on February 20, 1996, and filed on February 28, 1994.
- U.S. Patent No. 5,612,705 ("Openlander"), issued on March 18, 1997, and filed on January 11, 1996.
- U.S. Patent No. 5,771,026 ("Stengel"), issued on June 23, 1998, and filed on March 28, 1996.
- U.S. Patent No. 5,959,586 to Benham et al. ("Benham"), issued on September 8, 1999, and filed on July 18, 1997.
- U.S. Patent No. 6,121,940 ("Skahill"), issued on September 19, 2000, and filed on August 3, 1998.
- U.S. Patent No. 6,181,280 to Kadambi et al. ("Kadambi"), issued on January 30, 2001, and filed on July 28, 1999.
- U.S. Patent No. 6,662,021 ("Kang"), issued on December 9, 2003, and filed on October 15, 2002.
- U.S. Patent No. 6,774,856 ("Back"), issued on August 10, 2004, and filed on July 18, 2002.
- U.S. Patent No. 6,963,309 ("Andersson"), issued on November 8, 2005, and filed on December 14, 2001.
- U.S. Patent No. 7,038,631 ("Jecko"), issued on May 2, 2006, and filed on June 18, 2002.
- U.S. Patent No. 7,057,574 ("Shamir"), issued on June 6, 2006, and filed on October 9, 2001.

- U.S. Patent No. 7,068,228 ("Soutome"), issued on June 27, 2006 and filed on July 4, 2003.

- U.S. Patent No. 7,180,464 ("Chiang464"), issued on February 20, 2007 and filed on July 27, 2005.

- U.S. Patent No. 7,180,467 to Fabrega-Sanchez et al. ("Fabrega-Sanchez"), issued on February 20, 2007 and filed on July 26, 2004.

- U.S. Patent No. 7,274,340 ("Ozden"), issued on September 25, 2007, and filed on December 28, 2005.

- U.S. Patent No. 7,605,766 ("Dahlstrom"), issued on October 20, 2009, and filed on August 3, 2006.

- U.S. Patent Application No. 2002/0146988 to Boyle et al. ("Boyle"), published on October 10, 2002, and filed on January 24, 2002.

- U.S. Patent Application Publication No. 2003/0001790 A1 ("Louzir"), published on January 2, 2003, and filed on June 12, 2002.

- U.S. Patent Application No. 2003/0078028 to Shimada et al. ("Shimada"), published on April 24, 2003, and filed on October 23, 2002.

- U.S. Patent Application No. 2004/0196194 to Huang et al. ("Huang"), published on October 7, 2004, and filed on December 30, 2003.

- U.S. Patent Application Publication No. 2005/0057410 A1 ("Chiang410"), published on March 17, 2005, and filed on July 20, 2004.

- U.S. Patent Application Publication No. 2005/0231434 A1 ("Azadegan"), published on October 20, 2005, and filed on May 1, 2002.

- U.S. Patent Application No. 2006/0022899 to Chiang et al. ("Chiang"), published on February 2, 2006, and filed on July 27, 2005.

- U.S. Patent Application No. 2006/0214857 to Ollikainen et al. ("Ollikainen 2"), published on September 28, 2006, and filed on March 24, 2006.

- U.S. Patent Application Publication No. 2006/0232477 A1 ("Ollikainen-1"), published on October 19, 2006, and filed on April 15, 2005.

- U.S. Patent Application No. 2006/0250250 to Youn et al. ("Youn"), published on November 9, 2006, and filed May 4, 2005.

- U.S. Patent Application No. 2007/0194995 to Fang et al. ("Fang"), published on August 23, 2007, and filed on June 14, 2006.

- U.S. Patent Application No. 2008/0048863 to Copeland ("Copeland 2"), published on February 28, 2008, and filed on May 14, 2007.

- U.S. Patent Application No. 2008/0088460 to Copeland ("Copeland 1"), published on April 17, 2008, and filed November 14, 2007.

- Vinoy, K.J. "Fractal Shaped Antenna Elements For Wide- And Multi- Band Wireless Applications." The Pennsylvania State University, The Graduate School, College of Engineering. August 2002. https://etda.libraries.psu.edu/files/final_submissions/3436

- "Design of Reconfigurable Slot Antennas," by Peroulis, D., et al., IEEE Transactions on Antennas and Propagation, Vol. 53, No. 2, February 2005, ("Peroulis"). This paper is prior art under at least 35 U.S.C. § 102(a), and 103(a).

- "Printed wire antennas for wireless communications," by Zhang, Y. (2005), Master's thesis, Nanyang Technological University, Singapore: pp. 56 ("Zhang"). This publication is prior art under at least 35 U.S.C. § 102(a), and 103(a).

2. Prior Art Products or Systems

The following products or systems constitute prior art to the '908 Patent (collectively, the "'908 Prior Art Products") under at least pre-AIA 35 U.S.C. §§ 102(a), (b) and/or (g)(2) because they were known or used by others, in public use or on sale, or invented by another in this country prior the '908 Patent's priority date, or in the case of § 102(b) more than a year before that date:

- Nokia 6100
- Nokia 3300b
- Sony Ericsson T61LX
- Sony Ericsson T62u
- Samsung SGH-D500
- Cingular 8125

Each of the ’908 Prior Art Products qualifies as prior art under § 102 because it was either: (1) known or used by others, in public use, on sale, or otherwise available to the public in the United States before the alleged priority date, or (2) reduced to practice in the United States before the alleged priority date without being abandoned, suppressed, or concealed. To the extent the ’908 Patent is not entitled to the alleged priority date but instead to later priority dates, each of the ’908 Prior Art Products qualifies under pre-AIA § 102 or AIA § 102 for the same reasons as to those later priority dates. To support the substantive disclosure and status is prior art for each of the ’908 Prior Art Products, Verizon reserves the right to rely on the following sources of evidence, including those sources expressly cited in the accompanying exhibits:

- Samples, teardowns, diagrams, images, and the like, including any such materials Verizon or third parties have or will produce or make available for inspection;
- Documents relating to the prior art products, including any documents Verizon or third parties have produced or will produce;
- Testimony of Verizon’s or third parties’ employees and former employees;
- Fractus’s Infringement Contentions and expert reports and testimony in the current case or prior cases; and
- Verizon’s expert reports and testimony.

Verizon reserves the right to rely on other sources of evidence identified as discovery in Verizon’s investigation progresses.

C. Anticipation and Obviousness

Verizon attaches Exhibits B-01 through B-04, which provide exemplary disclosures showing how the prior art anticipates and/or renders obvious the ’908 Asserted Claims. The charts identify primary references, and, in some cases, secondary references, and anticipation and obviousness contentions. Verizon may rely on any of the primary references identified in Exhibits B-01 through B-04, in combination with any secondary reference identified in those

exhibits, as well as in Section III.B supra. Those exhibits also identify each such combination, and the motivation to combine such items with a reasonable expectation of success.

In addition, Verizon incorporates by reference the petitions, petitioner papers, and arguments in any future *Inter Partes* Reviews and *Ex Parte* Reexaminations, and all documents cited or referenced therein, which challenge the validity of the '908 patent.

By way of particular example, and not limitation, the '908 Asserted Claims would have been anticipated or obvious under pre-AIA §§102-103 based on each of the following references or combinations of references, as reflected and discussed in the accompanying claim charts:

- **Fang (addressed in Exhibit B-01)**
- **Boyle (addressed in Exhibit B-02)**
- **Kadambi (addressed in Exhibit B-03)**
- **Chiang (addressed in Exhibit B-04)**

D. Invalidity Under 35 U.S.C. § 112

1. Indefiniteness

a. "the at least one antenna element operates as a non-resonant antenna element"

The phrase "the at least one antenna element operates as a non-resonant antenna element" as recited in claim 1 of the '908 Patent is indefinite. The specification does not define or provide sufficient explanation for what is mean by the term "operates as", in the context of the phrase "the at least one antenna element **operates as** a non-resonant antenna element."

During prosecution, in a 1-28-2013 Amendment in Response to a Final Office Action, the Applicant amended claim 1 (and the other independent claim) as follows: "the at least one antenna element [is] <u>operates as</u> a non-resonant antenna element…", and alleged that "no new matter has been added by the amendments presented therein." However, in contrast to this

Fractus Exhibit 2002
Resmed v. Fractus
Page 30 of 109

Amendment (and this allegation), the specification consistently uses language aligned with the pre-Amendment claim language, but does not define or provide sufficient explanation for what is mean by the term "operates as" in the post-Amendment claim language. *See, e.g.*, '908 Patent at Abstract ("The antenna element **is** a non-resonant antenna element for frequencies…"), 4:33-37 ("…said, at least one, antenna element **is** a non-resonant antenna element…"), 5:50-56 ("…by intentionally using a non-resonant antenna element.."), 8:29-32 ("…when a non-resonant antenna system is used…"), 11:7-18 (description of FIGS. 12, 13, 15A-15C: "…an arrangement including a non-resonant antenna mounted … a circuit including a non-resonant antenna … show some alternative non-resonant antenna designs, as well as their corresponding Smith charts…"), 11:39-43 ("…the computed current distribution when a non-resonant antenna is used."), 11:51-53 ("FIG. 12 illustrates one example of a non-resonant antenna element, arranged on a ground plane 1250…"), 12:39-41 ("It has been found that when trying to reduce the size of a non-resonant antenna while substantially maintaining the basic antenna shape…"), 13:26-28 ("…the size of the non-resonant antenna…"), 15:33-38 ("…the non-resonant antenna…"), 15:39-44 ("FIG. 22A illustrate a non-resonant antenna element 2200 arranged at a short end of a substantially rectangular first ground-plane portion 2201…"), 15:55-57 ("FIG. 22E illustrates how the non-resonant antenna element 2200 is arranged…"), 16:25-27 ("FIGS. 23A and 23B correspond to measurements of a non-resonant antenna…").

As a result, the term "operates as", in the context of the phrase "the at least one antenna element **operates as** a non-resonant antenna element", is indefinite for being unclear, vague, and ambiguous for failing to provide reasonable certainty concerning the scope of the claimed invention. Claim 1, the only asserted claim for the '908 Patent, is thus invalid.

b. "at least one matching network"

The term "at least one matching network" as recited in claim 1 of the '908 Patent is indefinite. Claim 1 recites "[a] wireless portable device for radio communication", which includes, among other components, (1) "at least one antenna element included within the wireless portable device … the at least one antenna element operates as a non-resonant antenna element for frequencies that are not lower than … f_{min} … and not higher than … f_{max} …"; and (2) "at least one matching network operatively arranged between the at least one antenna element and the radio frequency communication circuitry." The specification of the '908 Patent describes that, in the same way that the "the input impedance" of any particular "antenna element" is "frequency dependent", "the matching" provided by any particular "matching network" is also "frequency dependent." *See, e.g.*, '908 Patent at 3:7-29, 5:8-30. Moreover, the specification of the '908 Patent stresses the importance, including to provide its particular solution to the particular problem that it states that it is intended to solve, of "the matching network … be[ing] adapted to the input impedance of the antenna [element]", and how this is of critical importance when using a "non-resonant antenna element" (as claimed) because a "non-resonant antenna element" has "low antenna efficiency, that is the result of the radiation efficiency and the miss match losses" in a frequency band of interest. *See, e.g.*, '908 Patent at 3:20-29 ("Normally, for each antenna, a matching network is used that is adapted to the characteristics of the antenna, including its input impedance. However, as the input impedance [of antenna elements] is frequency dependent, it can be difficult to provide a matching network that provides an adequate gain all over a wide frequency band."), 3:41-56 ("because of the non-resonant structure," of an example "L-shaped" antenna described as "useful for DVB terminals", "the resonance needs to be achieved outside the antenna, for example, with a matching circuit", and describing that "the non-resonant condition of said L-shaped [antenna] element … may still

Fractus Exhibit 2002
Resmed v. Fractus
Page 32 of 109

provide for a suitable frequency response, when a suitable matching network is used, as suggested in" a 2006 paper), 5:23-30 ("An antenna is normally very efficient at its resonant frequency and maintains a similar performance within the frequency range defined by its bandwidth around its resonant frequency (or resonant frequencies). Outside said frequency range, the efficiency and other relevant antenna parameters deteriorate with an increasing distance to said resonant frequency … A low antenna efficiency, that is the result of the radiation efficiency and the miss match losses, can be compensated or partly compensated, especially when the antenna is severely mismatched by a matching network with high miss match losses. However, also the matching quality is frequency dependent, and the matching network should also be adapted to the input impedance of the antenna."); *see also id.* at 5:14-56.

Claim 1, however, does **not** tie the claimed "at least one matching network" to the claimed "bandwidth with a … f_{min} … and an … f_{max}", **nor** to the claimed "input impedance of the at least one antenna element … for any frequency that is not lower than the … f_{min} … and not higher than the … f_{max}." Outside of the mere physical limitation that the claimed "at least one matching network" be "operatively arranged between the at least one antenna element and the [radio frequency] communication circuitry", claim 1 is silent as to the "at least one matching network" including how the "at least one matching network" is configured to operate relative to the other claim requirements. As a result, the term "at least one matching network" is indefinite for being unclear, vague, and ambiguous for failing to provide reasonable certainty concerning the scope of the claimed invention, and for failing to recite what the Applicant "regards as" its invention. Claim 1, the only asserted claim for the '908 Patent, is thus invalid.

2. Lack of Written Description

The '908 Asserted Claim does not comply with the first paragraph of § 112 because the specification does not "contain a written description of the invention, and of the manner and

process of making and using it, in such full, clear, concise, and exact terms as to enable any person skilled in the art to which it pertains, or with which it is most nearly connected, to make and use the same." In particular, the '908 Patent fails to provide adequate written description support for claim 1.

For example, as described above, the specification does not include reference to "operates as", in the context of the phrase "the at least one antenna element operates as a non-resonant antenna element." As described above, during prosecution, in a 1-28-2013 Amendment in Response to a Final Office Action, the Applicant amended claim 1 (and the other independent claim) as follows: "the at least one antenna element [is] <u>operates as</u> a non-resonant antenna element…", and alleged that "no new matter has been added by the amendments presented therein." However, in contrast to this Amendment (and this allegation), the '908 Patent specification consistently uses language aligned with the pre-Amendment claim language, but does not "contain a written description of the" full scope of the invention claimed under the post-Amendment claim language of claim 1.

Moreover, as described above, claim 1 does **not** tie the claimed "at least one matching network" to the claimed "bandwidth with a … f_{min} … and an … f_{max}", **nor** to the claimed "input impedance of the at least one antenna element … for any frequency that is not lower than the … f_{min} … and not higher than the … f_{max}." As described above, the '908 Patent specification, however, stresses the importance, including to provide its particular solution to the particular problem that it states that it is intended to solve, of "the matching network … be[ing] adapted to the input impedance of the antenna [element]", and how this is of critical importance when using a "non-resonant antenna element" (as claimed) because a "non-resonant antenna element" has "low antenna efficiency, that is the result of the radiation efficiency and the miss match losses"

in a frequency band of interest (such as the claimed band between "f_{min} … and … f_{max}." Accordingly, the '908 Patent specification does not "contain a written description of the" full scope of the invention claimed in claim 1.

Claim 1, the only asserted claim for the '908 Patent, is thus invalid for lack of written description support for its full breadth in the specification.

IV. '458 PATENT

A. Priority Date

The Asserted Claims of the '458 Patent are not entitled to a priority date earlier than the '458 Patent's actual filing date (i.e., Dec. 18, 2012). Despite having the burden of proof, Fractus has offered no evidence that the '458 Patent is entitled to an earlier priority date. Defendants understand, however, that Fractus maintains in its Infringement Contentions that the Asserted Claims of the '458 Patent are entitled to an earlier priority date of June 2005. While Fractus has offered no evidence for that priority date, and Defendants do not agree with it, the relevant prior art discussed below pre-dates that earlier alleged priority date.

B. Relevant Prior Art

Defendants identify the following prior art known to Defendants to anticipate or render obvious the '458 Patent under at least pre-AIA 35 U.S.C. §§ 102(a), (b), (e), and/or (g), either expressly or inherently as understood by a POSA, or based on Fractus's apparent interpretation of the claims.

1. Patents and Printed Publications

The following patents and patent application publications constitute prior art to the '458 Patent at least under pre-AIA 35 U.S.C. § 102(e) because they are issued patents or patent applications that name another inventor and were effectively filed before either of December 18, 2012 or June 2005. Some of these patents and publications are also prior art under pre-AIA §§

Fractus Exhibit 2002
Resmed v. Fractus
Page 35 of 109

102(a) and (b) because they issued or published before either of December 18, 2012 or June 2005, including in some instances more than a year prior to those dates under § 102(b).

- U.S. Patent Application Publication No. 2003/0124982 A1 ("Saari"), published July 3, 2003, and filed October 31, 2002
- U.S. Patent No. 5,596,401 ("Kusuzawa"), issued January 21, 1997, and filed September 14, 1994
- U.S. Patent No. 6,388,626 ("Gamalielsson"), issued May 14, 2002, and filed May 14, 1998
- U.S. Patent No. 6,476,769 ("Lehtola"), issued November 5, 2002, and filed September 19, 2001
- U.S. Patent No. 6,624,789 ("Kangasvieri"), issued September 23, 2003, and filed April 11, 2002
- U.S. Patent No. 6,670,923 (Kadambi"), issued December 30, 2003, and filed July 24, 2002
- U.S. Patent No. 6,728,555 ("Pirilä"), issued April 27, 2004, and filed September 28, 2000
- U.S. Patent No. 6,943,746 ("Talvitie"), issued September 13, 2005, and filed October 23, 2003
- U.S. Patent No. 7,023,387 ("Wen"), issued April 4, 2006, and filed May 13, 2004
- U.S. Patent No. 7,058,434 ("Wang434"), issued June 6, 2006, and filed November 18, 2003
- U.S. Patent No. 7,102,577 ("Richard"), issued September 5, 2006, and filed September 30, 2004
- U.S. Patent No. 7,109,924 ("Vance"), issued September 19, 2006, and filed May 18, 2004
- U.S. Patent No. 7,132,987 ("Olsson"), issued November 7, 2006, and filed November 2, 2000
- U.S. Patent No. 7,139,533 ("Katagishi"), issued November 21, 2006, and filed August 15, 2003
- U.S. Patent No. 7,142,824 ("Kojima"), issued November 28, 2006, and filed August 28, 2003

- U.S. Patent No. 7,162,266 ("Frank"), issued January 9, 2007, and filed December 17, 2004
- U.S. Patent No. 7,205,942 ("Wang"), issued April 17, 2007, and filed July 6, 2005
- U.S. Patent No. 7,339,528 ("Wang528"), issued March 4, 2008, and filed December 21, 2004
- U.S. Patent Application Publication No. 2002/0021250 A1 ("Asano"), published February 21, 2002, and filed June 7, 2001
- U.S. Patent Application Publication No. 2002/0094789 A1 ("Harano"), published July 18, 2002, and filed January 14, 2002
- U.S. Patent Application Publication No. 2003/0214446 A1 ("Shehab"), published November 20, 2003, and filed May 14, 2002
- U.S. Patent Application Publication No. 2003/0222823 A1 ("Flint"), published December 4, 2003, and filed February 20, 2003
- U.S. Patent Application Publication No. 2004/0043727 A1 ("Sato"), published March 4, 2004, and filed June 12, 2002
- U.S. Patent Application Publication No. 2004/0051669 A1 ("Rutfors"), published March 18, 2004, and filed July 10, 2001
- U.S. Patent Application Publication No. 2004/0113848 A1 ("Gaucher848"), published June 17, 2004, and filed December 13, 2002
- U.S. Patent Application Publication No. 2004/0121828 A1 ("Wang"), published June 24, 2004, and filed November 18, 2003
- U.S. Patent Application Publication No. 2004/0135729 A1 ("Talvitie729"), published July 15, 2004, and filed October 23, 2003
- U.S. Patent Application Publication No. 2004/0145528 A1 ("Mukai"), published July 29, 2004, and filed November 25, 2003
- U.S. Patent Application Publication No. 2004/0162107 A1 ("Klemetti"), published August 19, 2004, and filed March 19, 2003
- U.S. Patent Application Publication No. 2005/0041624 A1 ("Hui624"), published February 24, 2005, and filed June 3, 2003
- U.S. Patent Application Publication No. 2005/0104777 A1 ("Smith"), published May 19, 2005, and filed February 24, 2003

- U.S. Patent Application Publication No. 2006/0038736 A1 ("Hui736"), published February 23, 2006, and filed June 20, 2005

- U.S. Patent Application Publication No. 2006/0082503 A1 ("Gaucher"), published April 20, 2006, and filed October 18, 2004

- U.S. Patent Application Publication No. 2006/0109184 A1 ("Chen"), published May 25, 2006, and filed November 19, 2004

- U.S. Patent Application Publication No. 2006/0238433 A1 ("Chou"), published October 26, 2006, and filed March 1, 2005

- U.S. Patent Application Publication No. 2006/0290575 A1 ("Pelzer"), published December 28, 2006, and filed April 29, 2004

- U.S. Patent Application Publication No. 2009/0002248 A1 ("Zhao"), published January 1, 2009, and filed October 13, 2004

- Canadian Patent No. CA2141403C ("Hirata"), issued July 28, 1998, and filed October 19, 1989

- Chinese Patent Publication No. CN1452271A, published October 29, 2003, and filed April 19, 2002

- European Patent Publication No. EP1471596A1 ("Ying EP"), published October 27, 2004, and filed April 26, 2003

- German Patent No. DE10054192C2 ("Vazquez"), issued November 7, 2002, and filed November 2, 2000

- International PCT Publication No. WO 2001/065636 A1 ("Hu"), published September 7, 2001, and filed February 20, 2001

- International PCT Publication No. WO 2005/062422 A1 ("Esselle"), published July 7, 2005, and filed December 23, 2004

- International PCT Publication No. WO 2006/040609 A1 ("Zhao"), published April 20, 2006, and filed October 13, 2004

- Japanese Patent Publication No. JP2003152582A ("Fujisawa"), published May 23, 2003, and filed November 13, 2001

- U.K. Patent Application Publication No. GB 2336019 ("Berg"), published October 6, 1999, and filed March 29, 1999

- "Antenna Diversity for Mobile Phone", Edaboard Blog, February 26, 2024, https://www.edaboard.com/threads/antenna-diversity-for-mobile-phone.15262/

- D. Pozar, Microwave Engineering (John Wiley & Sons, Inc., 3rd ed. 2005) (Excerpts)
- Dialogue Flybook User's Manual rev. 1.02 (2003)
- ETSI TS 145 005 V4.3.0 (2001-04) Technical Specification: Digital cellular telecommunications system (Phase 2+); Radio transmission and reception (3GPP TS 45.005 version 4.3.0 Release 4)
- G. Lee & K. Wong, "Quad-Band Internal Monopole Mobile-Phone Antenna." Microwave and Optical Technology Letters, volume 40, no. 5 (March 5, 2004): pp. 359-361 ("Lee")
- IBM Hardware Announcement: New IBM ThinkPad T42 notebooks feature new fingerprint and Intel PRO/Wireless technologies (Jan. 11, 2005)
- IEEE Std. 802.11a-1999, Supplement to the IEEE Standard for Information Technology—Telecommunications and information exchange between systems—Local and metropolitan area networks—Specific requirements— Part 11: Wireless LAN Medium Access Control (MAC) and Physical Layer (PHY) specifications: High-speed Physical Layer in the 5 GHz Band (Dec. 30, 1999)
- IEEE Std. 802.11b-1999, Supplement to the IEEE Standard for Information Technology—Telecommunications and information exchange between systems—Local and metropolitan area networks—Specific requirements— Part 11: Wireless LAN Medium Access Control (MAC) and Physical Layer (PHY) specifications: Higher-Speed Physical Layer Extension in the 2.4 GHz Band (Jan. 20, 2000)
- IEEE Std. 802.11g-2003, 802.11g IEEE Standard for Information technology—Telecommunications and information exchange between systems—Local and metropolitan area networks—Specific requirements Part 11: Wireless LAN Medium Access Control (MAC) and Physical Layer (PHY) specifications, Amendment 4: Further Higher Data Rate Extension in the 2.4 GHz Band (June 27, 2003)
- K. Wong et al. "Isolation between GSM/DCS and WLAN Antennas in a PDA Phone." Microwave and Optical Technology Letters, Volume 45, Number 4 (May 20, 2005): pages 347-352. ("Wong")
- Overall Revision of the Rules Regarding Industrial Scientific and Medical (ISM) Equipment, 50 Fed. Reg. 36061, 36069 (Sep. 5, 1985) (codified at 47 C.F.R. §18.301)
- P. Ciais et al., "Compact internal multiband antenna for mobile phone and WLAN standards," Electronic Letters, Vol. 40, No. 15, pp. 920-921 (2004)) ("Ciais-Multiband")
- R. James et al., Mathematics Dictionary (Chapman & Hall, 5th ed. 1992) (Excerpts)
- Specification of the Bluetooth System version 2.0, volume 2 (issued Nov. 4, 2004)

- T. Smith, "Dialogue demos 'total wireless' sub-notebook" (The Register, Jun. 2, 2004)
- Unlicensed NII Devices in the 5 GHz Frequency Range, 63 Fed. Reg. 40831, 40836-40837 (July 31, 1998) (codified at 47 C.F.R. §15.407)
- Wi-Fi Alliance Press Release, "Wi-Fi Celebrates Its Third Birthday" (Apr. 7, 2003) (Wayback Machine copy dated Sep. 28, 2003)
- Y.H. Shum et al., "Multi-band base station antenna with compact microstrip resonant cell filters," IEEE Proceedings – Microwaves, Antennas and Propagation, Volume 151, Issue 6, 16 December 2004
- Y.J. Wang et al., "Novel Microstrip-Monopole-Integrated Ultra-Wideband Antenna for Mobile UWB Devices," Radio and Wireless Conference, 2003. RAWCON'03. Proceedings, IEEE, 2003, pp. 87-90
- Z. Ying & J. Andersson, "Multi band, multi antenna system for modern mobile terminal," 6th International Symposium on Antennas, Propagation and EM Theory, 2003. Proceedings. 2003, Beijing, China, 2003, pp. 287-290, doi: 10.1109/ISAPE.2003.1276684
- Zigbee Standards Organization, "ZigBee Specification," Document 053474r06, Version 1.0 (Jun. 27, 2005)

2. Prior Art Products or Systems

The following products or systems constitute prior art to the '458 Patent (collectively, the "'458 Prior Art Products") under at least pre-AIA 35 U.S.C. §§ 102(a), (b) and/or (g)(2) because they were known or used by others, in public use or on sale, or invented by another in this country prior the '458 patent's priority date, or in the case of § 102(b) more than a year before that date:

- HTC Typhoon
- Nokia 6310i
- Blackberry 7290
- HTC Blue Angel
- Sony Ericsson GC79 PC Card

- Nokia 6630

As reflected in the accompanying claim charts and exhibits, each of the ’458 Prior Art Products qualifies as prior art under § 102 because it was either: (1) known or used by others, in public use, on sale, or otherwise available to the public in the United States before the alleged priority date, or (2) reduced to practice in the United States before the alleged priority date without being abandoned, suppressed, or concealed. To the extent the ’458 Patent is not entitled to the alleged priority date but instead to later priority dates, each of the ’458 Prior Art Products qualifies under pre-AIA § 102 or AIA § 102 for the same reasons as to those later priority dates. To support the substantive disclosure and status is prior art for each of the ’458 Prior Art Products, Defendants reserve the right to rely on the following sources of evidence, including those sources expressly cited in the accompanying claim charts and exhibits:

- Samples, teardowns, diagrams, images, and the like, including any such materials Defendants or third parties have or will produce or make available for inspection;
- Documents relating to the prior art products, including any documents Defendants or third parties have produced or will produce;
- Testimony of Defendants’ or third parties’ employees and former employees;
- Fractus’s Infringement Contentions and expert reports and testimony in the current case or prior cases; and
- Defendants’ expert reports and testimony.

Defendants reserve the right to rely on other sources of evidence identified as discovery in Defendants’ investigation progresses.

C. Anticipation and Obviousness

Defendants attach Exhibits C-01 through C-13, which provide exemplary disclosures showing how the prior art anticipates and/or renders obvious the ’458 Asserted Claims. The charts identify primary references, and, in some cases, secondary references, and anticipation and

Fractus Exhibit 2002
Resmed v. Fractus
Page 41 of 109

obviousness contentions. Defendants may rely on any of the primary references identified in Exhibits C-01 through C-13, in combination with any secondary reference identified in those exhibits, as well as in Section IV.B supra. Those exhibits also identify each such combination, and the motivation to combine such items with a reasonable expectation of success.

In addition, Defendants incorporate by reference the petitions, petitioner papers, and arguments in *Inter Partes* Review No. IPR2025-00929 (filed by Geotab April 30, 2025)), as well as any future *Inter Partes* Reviews and *Ex Parte* Reexaminations, and all documents cited or referenced therein, which challenge the validity of the ’458 patent.

By way of particular example, and not limitation, the ’458 Asserted Claims would have been anticipated or obvious under pre-AIA §§102-103 based on each of the following references or combinations of references, as reflected and discussed in the accompanying claim charts:

- **Saari (addressed in Exhibit C-01)**
- **Gamalielsson (addressed in Exhibit C-02)**
- **Talvitie (addressed in Exhibit C-03)**
- **Hu (addressed in Exhibit C-04)**
- **Wong, alone or in view of Lee (addressed in Exhibit C-05)**
- **Gaucher (addressed in Exhibit C-06)**
- **Zhao (addressed in Exhibit C-07)**
- **HTC Typhoon (addressed in Exhibit C-08)**
- **Nokia 6310i (addressed in Exhibit C-09)**
- **Blackberry 7290 (addressed in Exhibit C-10)**
- **HTC Blue Angel (addressed in Exhibit C-11)**
- **Sony Ericsson GC79 (addressed in Exhibit C-12)**
- **Nokia 6630 (addressed in Exhibit C-13)**

D. Invalidity Under 35 U.S.C. § 112

1. Indefiniteness

a. "substantially close"

The term "substantially close" as recited in claims 1, 2, 3, 4, and 8 of the '458 Patent is indefinite because it is a term of degree and the patent fails to provide sufficient guidance for determining its scope. When a claim uses a term of degree, the intrinsic record must provide "objective boundaries" sufficient to allow POSAs to discern the scope of the claim with "reasonable certainty." *Nautilus, Inc. v. Biosig Instruments, Inc.*, 572 U.S. 898, 901 (2014); *see also Berkheimer v. HP Inc.*, 881 F.3d 1360, 1364 (Fed. Cir. 2018) (Federal Circuit "case law is clear that the objective boundaries requirement applies to terms of degree.").

Claim 1[8] is exemplary and recites, in part:

> 1. A wireless handheld or portable device comprising:
>
> a ground plane;
>
> the ground plane is inscribed in a rectangular area comprising a first side and a second side, a length of the second side being greater than a length of the first side;
>
> a first antenna …
>
> a second antenna …
>
> * * * * * * *
>
> the first antenna is arranged **substantially close** to the first side; and
>
> the first antenna and the second antenna are located internally within the wireless handheld or portable device.
>
> 2. The wireless handheld or portable device according to claim 1, wherein the second antenna is arranged **substantially close** to the second side.

[8] '458 Patent claim 2 is also reproduced below.

Nothing in the claims or intrinsic record provide guidance regarding what degree of proximity does qualify, and what degree of proximity does not qualify, as "substantially close" *See, e.g.*, '458 Patent at FIGS. 23A-23C (reproduced below), 23:40-53 ("In FIGS. 23(A-B) examples of how a slot-antenna component 2210 can be placed on a substantially rectangular PCB 2300 of a wireless (e.g. handheld or portable) device are shown. In FIG. 23A the longer dimension of the slot-antenna component 2210 is aligned with one of the longer edges of the PCB 2300, and substantially centered along said edge. FIG. 23B relates to the case where the longer dimension of the slot-antenna component 2210 is aligned with one of the longer edges of the PCB 2300, and **substantially close** to a corner of said edge and in FIG. 23C the longer dimension of the slot-antenna component 2210 is aligned with one of the shorter edges of the PCB 2300, and **substantially close** to a corner of said edge. It may also be centered along the short edge."), 13:65-14:4 ("The antenna component should not be **to[*sic*] far** away from the edge of the PCB. This facilitates providing a clearance and assures good radiation characteristics. In some embodiments, the antenna component is preferably located **on or close to** the middle of an edge and in particular **on or close to** the middle of a long edge of the circuit board or the ground plane.");

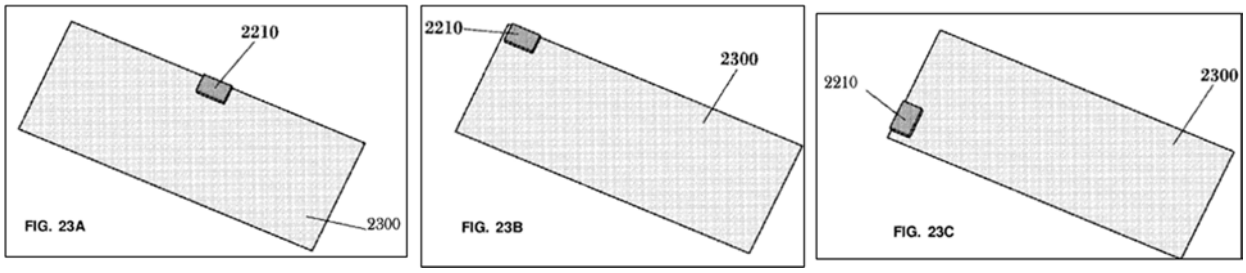

see also id. at 12:35-49, 12:62-65, 22:41-43 ("All contact terminals 2214, 2215 are arranged **on or close to** the edge of the conductive surface 2211 and at the same time **on or close to** the edge of antenna component 2210."); FIGS. 22A-22B (reproduced below):

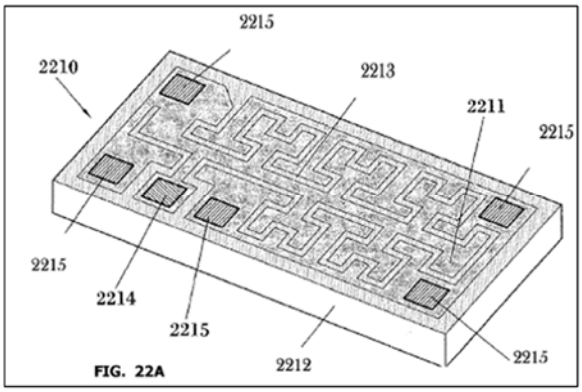

FIG. 22A

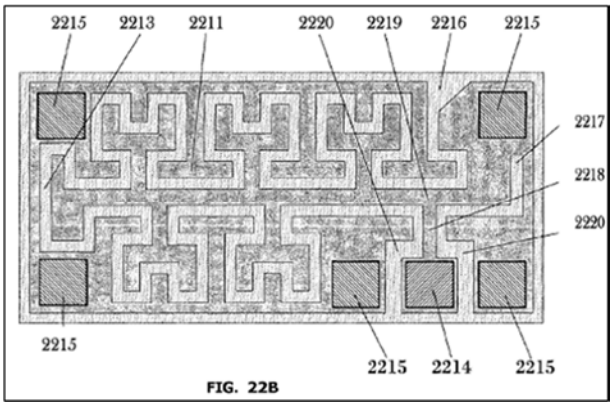

FIG. 22B

See also id. at 16:30-37 ("In the example of FIGS. 4(A-B), and without being a limitation of the invention, the slot (402) has been created in the ground plane of the PCB (400) (namely, in a conductive metal layer of the PCB) on its right hand side and **near** the bottom (considering a ground plane arranged in the vertical plane and with the mobile antenna 401 at its top end, as illustrated in FIGS. 4(A-B)).”); FIGS. 4A-4B (reproduced below):

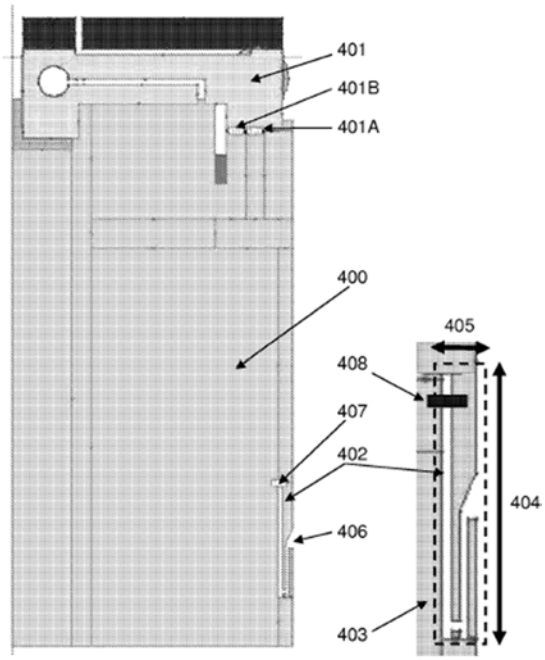

FIG. 4A FIG. 4B

See also id. at claims 14, 15 (reciting similar limitations as claims 1-4 except the term "proximate" is used instead of the term "substantially close").

For example, reviewing the depicted examples in the specification, given that slot 402 is described as "**near** the bottom" of PCB 400 (FIG. 4A (above)), "contact terminals 2214, 2215" are described as being "arranged … **on or close to** the edge of antenna component 2210" (FIGS. 22A-22B (above)), "the longer dimension of the slot-antenna component 2210" in FIG. 23B (above) is described as being "**substantially close** to a corner of said [longer] edge [of PCB 2300", and "the longer dimension of the slot-antenna component 2210" in FIG. 23C (above) is described as being "**substantially close** to a corner of said [shorter] edge [of PCB 2300]", it is not clear what distance is too far away to no longer fall within the scope of "substantially close." *See Clear Imaging Rsch., LLC v. Samsung Elecs. Co.*, 2020 WL 6384731, at *20-*21 (E.D. Tex. Oct. 30, 2020) ("substantially blur free" indefinite because the patents did not provide sufficient guidance to determine the term's scope). Indeed, the '458 Patent appears to treat "near" (FIG. 4A) and "close" (FIGS. 22A, 22B) as terms with different scope than "substantially close" (FIGS. 23B, 23C). However, given that "substantially close" is not a term of art, and that the intrinsic records lacks any "objective boundaries" for a POSA to understand the degrees of proximity that do, and the degrees of proximity that do not, qualify as "substantially close", the term is indefinite for failing to provide reasonable certainty concerning the scope of the claimed invention. The claims in which this term appears (whether directly or via dependency) are thus invalid.

b. "proximate"

The term "proximate" as recited in claims 14 and 15 of the '458 Patent is indefinite because it is a term of degree and the patent fails to provide sufficient guidance for determining its scope. When a claim uses a term of degree, the intrinsic record must provide "objective boundaries" sufficient to allow POSAs to discern the scope of the claim with "reasonable certainty." *Nautilus*, 572 at 901; *see also Berkheimer*, 881 F.3d at 1364.

Fractus Exhibit 2002
Resmed v. Fractus
Page 46 of 109

Claim 14[9] is exemplary and recites, in part:

> 14. A wireless handheld or portable device comprising:
>
> a ground plane;
>
> the ground plane is inscribed in a first rectangular area comprising a first side, a second side and a third side, a length of the second side being greater than a length of the first side and a length of the third side;
>
> a first antenna …
>
> a second antenna …
>
> * * * * * * *
>
> the first antenna is **proximate** to the first side;
>
> * * * * * * *
>
> the second antenna is **proximate** to the second side;
>
> * * * * * * *
>
> at least one of the first antenna and the second antenna is **proximate** to a corner of the first rectangular area; and
>
> the first antenna and the second antenna are located internally within the wireless handheld or portable device.
>
> 15. The wireless handheld or portable device according to claim 14, wherein the first antenna is **proximate** to a first corner of the first rectangular area and the second antenna is **proximate** to a second corner of the first rectangular area.

Nothing in the claims or intrinsic record provide guidance regarding what degree of closeness does qualify, and what degree of closeness does not qualify, as "proximate." The word "proximate" does not appear anywhere in the specification of the '458 Patent. *See, e.g.*, '458 Patent at FIGS. 23A-23C (reproduced above), 23:40-53 (excerpt using "substantially close" reproduced above), 13:65-14:4 (excerpt using "to[*sic*] far away" and "on or close to" reproduced above), 12:35-49, 12:62-65, 22:41-43 (excerpt using "on or close to" reproduced above), FIGS.

[9] '458 Patent claim 15 is also reproduced below.

Fractus Exhibit 2002
Resmed v. Fractus
Page 47 of 109

22A-22B (reproduced above), 16:30-37 (excerpt using "near" reproduced above), FIGS. 4A-4B (reproduced above), claims 1-4, 8 (reciting similar limitations as claims 14-15 except the term "substantially close" is used instead of the term "proximate").

For example, reviewing the depicted examples in the specification, given that slot 402 is described as "**near** the bottom" of PCB 400 (FIG. 4A (above)), "contact terminals 2214, 2215" are described as being "arranged … **on or close to** the edge of antenna component 2210" (FIGS. 22A-22B (above)), "the longer dimension of the slot-antenna component 2210" in FIG. 23B (above) is described as being "**substantially close** to a corner of said [longer] edge [of PCB 2300", and "the longer dimension of the slot-antenna component 2210" in FIG. 23C (above) is described as being "**substantially close** to a corner of said [shorter] edge [of PCB 2300]", it is not clear what distance is too far away to no longer fall within the scope of "proximate." *See Clear Imaging*, 2020 WL 6384731, at *20-*21. Indeed, the '458 Patent appears to treat "near" (FIG. 4A) and "close" (FIGS. 22A, 22B) as terms with different scope than "substantially close" (FIGS. 23B, 23C). However, given that "proximate" is not a term of art, and that the intrinsic records lacks any "objective boundaries" for a POSA to understand the degrees of closeness that do, and the degrees of closeness that do not, qualify as "proximate", the term is indefinite for failing to provide reasonable certainty concerning the scope of the claimed invention. The claims in which this term appears (whether directly or via dependency) are thus invalid.

2. Lack of Written Description

The '458 Asserted Claims do not comply with the first paragraph of § 112 because the specification does not "contain a written description of the invention, and of the manner and process of making and using it, in such full, clear, concise, and exact terms as to enable any person skilled in the art to which it pertains, or with which it is most nearly connected, to make and use the same."

In particular, to the extent that the Plaintiff argues that the asserted claims do not require either the "first antenna" or the "second antenna" to be a "slot antenna" (also disclosed functionally as an antenna that "substantially behave[s] as a magnetic current source") nor require that one of the "first antenna" or the "second antenna" have a particular-selected geometry "to eliminate any resonance modes that might fall within any of the operating bands of the" other antenna, then the '458 Patent fails to provide adequate written description support for claims.

For example, with asserted claim 1 being exemplary, in view of nonasserted claims 5 and 6, the Plaintiff may argue that both the "first antenna" and the "second antenna" recited in asserted claim 1 (and likewise in asserted claims 8 and 14) could be "monopole antenna[s]", provided that the "first [monopole] antenna extends in a direction substantially parallel[10] to the [shorter] first side [of the "rectangular area" in which the "ground plane" is "inscribed"]" and that the "second [monopole] antenna extends in a direction substantially parallel to the ["longer"] second side [of the "rectangular area" in which the "ground plane" is "inscribed"]." *See* '458 Patent, claims 1, 5-6; *see also id*. at claims 8, 12-13, 14, 18-19.

However, the "Summary of the Invention" of the specification specifically states that, without substituting a "slot antenna" (or "magnetic current source"-behaving antenna) as one of the antennas, or without selecting particular geometry "to eliminate any resonance modes that might fall within any of the operating bands of the" other antenna, it would "be a difficult task, due to the influence of the common groundplane", to achieve adequate isolation between two

[10] *See, e.g.*, '458 Patent, 10:42-47 (specification describing "substantially parallel" and "substantially orthogonal"), 17:10-15 (same).

Fractus Exhibit 2002
Resmed v. Fractus
Page 49 of 109

"monopole antenna[s]" (or "electric current source"-behaving antennas) by merely orientating them to be "substantially orthogonal" to each other on a PCB:

> In order to increase isolation, it can be advantageous to establish the at least two antennas so that the polarization of the radiation of one of the antennas is substantially orthogonal to the polarization of the radiation of another of said antennas. At a first look, it could seem that this could also be easily accomplished by using, for example, two monopole antennas, directed in appropriate directions so as to establish an orthogonal relationship between the polarization of their radiations. However, a problem involved with hand-held devices is that the radiation of an antenna is substantially conditioned by the ground-plane, that is, normally, by at least one conductive layer of the PCB. In practice, normally both antennas are placed on the same ground-plane, therefore obtaining substantially orthogonally polarized radiation using two antennas of the same type can be a difficult task, due to the influence of the common groundplane. Contrarily, when one of the antennas is a slot antenna, the radiation from said antenna will depend substantially less on the groundplane, thus facilitating obtaining the above-mentioned orthogonally polarized radiation.

See '458 Patent, 9:5-25; *see also id*. at 8:50-9:5, 9:61-10:52, Abstract ("The invention relates to a handheld device comprising a first antenna … and a second antenna … According to the invention, the second antenna comprises a slot antenna…"), 8:39-("The present invention relates … to a handset or handheld device which comprises a first antenna … and a second antenna …, wherein the said second antenna is a slot antenna."); FIGS. 4A-4B, 7A-7I, 9A-9L, 11A-11B, 13A-13B, 22A-22B, 23A-23C and accompanying disclosure (all describing embodiments using a slot antenna); *see also id*. at 14:24-33 ("Another aspect of the invention relates to a technique to further improve the isolation between a mobile antenna and a wireless connectivity antenna in a handset or handheld device, for example, by acting on the geometry of the mobile antenna to eliminate any resonance modes that might fall within any of the operating bands of the wireless connectivity antenna…"), 18:54-67, 19:47-59, 20:22-28.

Accordingly, to the extent that the Plaintiff argues that the asserted claims do not require at least one "slot antenna" nor at least one antenna with a particular-selected geometry "to eliminate any resonance modes that might fall within any of the operating bands of the" other

Fractus Exhibit 2002
Resmed v. Fractus
Page 50 of 109

antenna, then the asserted claims are invalid for lack of written description support in the specification.

The ’458 Patent also fails to provide adequate written description support for claims 1, 2, 3, 4, 8, 14, and 15. As described above, the specification does not disclose guidance regarding what degree of proximity does qualify, and what degree of proximity does not qualify, as “substantially close” or “proximate.” Accordingly, the claims in which these terms appear (whether directly or via dependency) are invalid for lack of written description support in the specification.

V. ’677 PATENT

A. Priority Date

1. Overview

The Asserted Claims of the ’677 Patent are not entitled to a priority date earlier than the ’677 patent’s actual filing date (i.e., Mar. 27, 2020). Despite having the burden of proof, Fractus has offered no evidence that the ’677 Patent is entitled to an earlier priority date. Defendants understand, however, that Fractus maintains in its Infringement Contentions that the Asserted Claims of the ’677 Patent are entitled to an earlier priority date of June 19, 2006. While Fractus has offered no evidence for that priority date, and Defendants do not agree with it, the relevant prior art discussed below (except for Baliarda-543, as discussed below) pre-dates that earlier alleged priority date.

2. The ’677 Patent Is Not Entitled to Priority Before April 7, 2014.

The ’677 patent is a continuation of, *inter alia*, Application No. 11/614,429 (“the ’429 application”) (’677 Patent, code (63)), filed December 21, 2006, published January 24, 2008 (U.S. Patent Pub. No. 2008/0018543 A1, “Baliarda-543”).

For any Asserted Claim to be entitled to the ’429 application’s filing date, the ’429 application must provide written description supporting that claim. *Arthrex v. Smith & Nephew*, 35 F.4th 1328, 1343 (Fed. Cir. 2022).

Written description requires that the disclosure within the four corners of ’429 application “reasonably conveys to [a POSA] that the inventor had possession of the [later-claimed] claimed subject matter as of the filing date,” e.g., December 21, 2006. *Regents of the Univ. of Cal. v. Broad Inst.*, No. 22-1653, slip op., 24 (Fed. Cir. May 12, 2025); *Ariad Pharms. v. Eli Lilly*, 598 F.3d 1336, 1351 (Fed. Cir. 2010) (*en banc*) (“The test requires an objective inquiry into the four corners of the specification from the perspective of a [POSA] to show that the inventor actually invented the invention claimed.”) (cleaned up).

The written description must support the full scope of the claimed subject matter. *Arthrex*, 35 F.4th at 1343-1344 (no written description supporting full scope of “first member including ***an eyelet***” where priority document failed to describe a flexible eyelet); *Rivera v. Int’l Trade Comm’n*, 857 F.3d 1315, 1319-1321 (Fed. Cir. 2017) (specification “did not provide the necessary written description support for the ***full breadth*** of the asserted claims” where claims were broadly drawn to a “container… adapted to hold brewing material” but the specification only disclosed a “pod adapter assembly” or “receptacle” designed to hold a “pod”), 1322 (“The specification here does not teach a container with an integrated filter, and so, does not provide written description support for such a container[.]”); *ICU Medical v. Alaris Med. Sys.*, 558 F.3d 1368, 1377-78 (Fed. Cir. 2009) (no written description for full scope of “a needleless connector valve comprising a body and a seal” without “any spike limitation” where priority document only described medical valves ***with*** spikes); *Google LLC v. Valtrus Innovations Ltd.*, IPR2022-

01406, Paper 40, 60-61 (Apr. 3, 2024) (no written description supporting full scope of "computing domains" where priority document provided no description of virtual machines).

Each of the Asserted Claims discussed in this section contains the term "4G communications standard(s)," either directly or by dependency. In December of 2006, there were discussions ongoing about 4G but what a 4G communication system would look like was undefined. Only years later did the International Telecommunication Union's ("ITU") International Mobile Telecommunications ("IMT")-Advanced in Report ITU-R M.2134, adopted November 2008, define the requirements for a 4G communication system. *See* ITU, Report ITU-R M.2134-0: Requirements related to technical performance for IMT-Advanced radio interface(s) (2008), available at https://www.itu.int/pub/R-REP-M.2134-2008/en (visited June 12, 2025). An LTE communication ***standard*** was not defined until years after the '429 application was filed. *See* 3GPP TS 36.101 v8.4.0 (2008-12) Technical Specification: 3rd Generation Partnership Project; Technical Specification Group Radio Access Network; Evolved Universal Terrestrial Radio Access (E-UTRA); User Equipment (UE) radio transmission and reception (Release 8), 2008 ("3GPP TS 36.101"); Ericsson white paper, "LTE—an introduction," no. 284 23-3124 Uen Rev B (June 2009) ("LTE—an introduction"), 7 (LTE specification completed March 2009). In litigation, Fractus argued that the claimed "4G communication standard" is met by LTE. Fractus should be held to it position that an LTE band is a "frequency band associated with a 4G communication standard," which is fatal to the patentability of the claims based on Baliarda-543, as explained below.

The '429 application provides no written description supporting the full scope of a "frequency band… associated with a 4G communication standard" (1[e]-[f]), "antenna configured to receive signals employing a 4G communication standard" (claim 4), or "antenna…

configured to transmit and receive signals from a 4G communication standard" (12[m]) when the "4G communication standard" is interpreted to encompass LTE. The '429 application provides no description of LTE, LTE frequency bands, or the 3GPP Technical Specification 36.101 V8.4.0 (2008-12)—published years ***after*** the '429 application's filing—that defines LTE and its frequency bands. Baliarda-543; 3GPP TS 36.101; LTE—an introduction, 7 (LTE specification completed in March 2009); pages from E. Dahlman et al., 3G Evolution: HSPA and LTE for Mobile Broadband (Academic Press 2d ed. 2008) ("Dahlman"), 497-502.

On December 21, 2006, the LTE frequency bands ***had not even been defined*** and what frequency ranges they might eventually use was an "open issue." 3GPP TR 23.882 V1.8.0 (2007-02) Technical Report: 3rd Generation Partnership Project; Technical Specification Group Services and System Aspects; 3GPP System Architecture Evolution: Report on Technical Options and Conclusions (Release 7) (February 2007 report), 112 ("Open issues… Is the evolved access system envisioned to work on new and/or existing frequency band?"); 3GPP TR 23.882 V1.6.1 (2006-11) Technical Report: 3rd Generation Partnership Project; Technical Specification Group Services and System Aspects; 3GPP System Architecture Evolution: Report on Technical Options and Conclusions (Release 7) (November 2006 report), 108 (same); 3GPP TR 23.882 V1.2.3 (2006-06) Technical Report: 3rd Generation Partnership Project; Technical Specification Group Services and System Aspects; 3GPP System Architecture Evolution: Report on Technical Options and Conclusions (Release 7) (June 2006 report), 84 (same); Dahlman, 497-502 (LTE frequency bands); 3GPP TS 36.101(December 2008 document defining LTE bands), LTE—an introduction, 7 (LTE specification completed in March 2009).

Indeed, LTE band 12 (699-716 MHz uplink and 728-746 MHz downlink, Dahlman, 498 (Table 20.1))—whose uplink portion Fractus ***expressly relies upon*** for meeting limitation 1[i]-

[j]] in its complaint against Geotab (D.I. 1, Complaint, Fractus, S.A., v. Geotab Inc., No. 2:24-cv-01008 (E.D. Tex. Dec. 6, 2024), 21)—is part of a frequency range (698-806 MHz) that ***was not even available for use with mobile communications*** (let alone LTE) until WRC-07 in October-November 2007—***nearly a year after*** Fractus's December 21, 2006 filing date for the '429 application. U.S. Department of State, United States Delegation Report: World Radiotelecomunications Conference 2007 (2007), available at https://2001-2009.state.gov/documents/organization/108955.pdf (visited June 12, 2025), 1 (WRC-07 took place in Geneva, Switzerland between October 22 and November 16, 2007); Dahlman, 501 ("20.1.2 New frequency bands… ***WRC-07 identified additional frequency bands*** for IMT, which encompasses both IMT-2000 and IMT-Advanced. ***Several bands were defined by WRC-07*** that will be available partly or fully for deployment on a global basis:… ***698-806 MHz was allocated to mobile service*** and identified to IMT to some extent in all regions. Together with the band 806-960 MHz identified at WRC-2000, it forms a wide frequency range from 698 to 960 MHz that is partly identified to IMT in all regions, with some variations."). Within this 698-806 MHz range defined for mobile communications at WRC-07, LTE bands 12, 13, and 14 (Dahlman, 498 (Table 20.1)) were "defined for operation mainly for US allocations." Dahlman, 501.

Moreover in July 2007—before WRC-07—the spectrum at 698-806 MHz (spanning the frequencies where LTE bands 12, 13, and 14 were later defined) ***was occupied by television broadcasters*** in TV Channels 52-69. *See* Second Report and Order, In re Service Rules for the 698-746, 747-762 and 777-792 MHz Bands (WT Docket No. 06-150); Revision of the Commission's Rules to Ensure Compatibility with Enhanced 911 Emergency Calling Systems (CC Docket No. 94-102); Section 68.4(a) of the Commission's Rules Governing Hearing Aid-

Compatible Telephones (WT Docket No. 01-309); Biennial Regulatory Review–Amendment of Parts 1, 22, 24, 27, and 90 to Streamline and Harmonize Various Rules Affecting Wireless Radio Services (WT Docket No. 03-264); Former Nextel Communications, Inc. Upper 700 MHz Guard Band Licenses and Revisions to Part 27 of the Commission's Rules (WT Docket No. 06-169); Implementing a Nationwide, Broadband, Interoperable Public Safety Network in the 700 MHz Band (PS Docket No. 06-229); Development of Operational, Technical and Spectrum Requirements for Meeting Federal, State and Local Public Safety Communications Requirements Through the Year 2010 (WT Docket No. 96-86); Declaratory Ruling on Reporting Requirement under Commission's Part 1 Anti-Collusion Rule (WT Docket No. 07-166), FCC 07-132 (Jul. 31, 2007), available at https://docs.fcc.gov/public/attachments/FCC-07-132A1.pdf (visited June 12, 2025), 3. In other words, when PO filed the '429 application on December 21, 2006 the 698-806 MHz frequency range ***was not available*** for use in ***any*** cellular communication, let alone LTE or 4G communication.

Because the LTE frequency band definition was an "open issue" and the frequency ranges for LTE bands had not been selected, a POSA reading the '429 application on December 21, 2006 would have concluded that the applicants did ***not*** possess a wireless device with an antenna configured to support an LTE frequency band (a "frequency band[]… associated with a 4G communication standard") or "configured to transmit and receive" LTE signals ("signals from a 4G communication standard"), let alone one that also met the complexity factors and other requirements of the Asserted Claims. On December 21, 2006, when the '429 application was filed, no one could have determined whether any antenna disclosed in the application was configured to support a "frequency band[] associated with" LTE, or to send/receive LTE signals, because the LTE frequency bands had not yet even been defined.

Fractus Exhibit 2002
Resmed v. Fractus
Page 56 of 109

A POSA would have concluded that the applicants did not possess an antenna configured to send or receive signals in the 698-806 MHz spectrum—including the LTE band 12 that Fractus relies upon here—for communication with any "4G communication standard" because those frequencies were not usable for any mobile device communications at the time of filing. In short, the applicants did not possess, and the priority documents cannot "describe," claimed subject matter—antennas sending and receiving signals using LTE protocols on LTE frequency bands, neither of which existed at the time. *Id.*

The '429 application thus fails to provide written description for the full scope of "frequency band[]… associated with a 4G communication standard" encompassing an LTE frequency band, or the full scope of "antenna… configured to transmit and receive signals from a 4G communication standard" that includes LTE (and LTE bands 12, 13, and 14). *Arthrex*, 35 F.4th at 1343-44; *Rivera*, 857 F.3d at 1321-22; *ICU Medical*, 558 F.3d at 1377. The Asserted Claims at issue here are thus not entitled to priority to the '429 application's filing date. *Arthrex*, 35 F.4th at 1343.

A specification does not satisfy the written description requirement for a broad claim by merely describing a single embodiment. In *Smith & Nephew v. Arthrex*, IPR2017-00275, Paper 36, 27-28 (May 2, 2018), the claim recited a "first member" that covered both a flexible loop and a fixed aperture. The priority documents only disclosed a fixed aperture. The Board refused to give the claim an earlier effective-filing date because the priority documents did not provide a written description supporting the full scope of the claim including the flexible loop. *Id.*, 40; *generally id.*, 27-40. The Federal Circuit affirmed. *Arthrex*, 35 F.4th at 1343-1344.

Even if the '429 application describes a species of 4G, that is not enough to support the broad genus (antenna working with 4G communication standard) that the '677 patent claims.

Written description for the 4G genus requires either (1) "structural features common to the members" of the genus or (2) "a representative number of species falling within the scope" of the genus so that a POSA "can visualize or recognize the members" of it. *Ariad*, 598 F.3d at 1350 (internal citation omitted).

The '429 application fails both *Ariad* tests. The '677 patent claims an antenna with specific "complexity factors" related to the antenna's operating frequencies, but the '429 application never teaches a POSA how to make or identify such an antenna for LTE because LTE did not exist. Based on the '429 application's disclosure no POSA would have known how to design an LTE antenna, because in December 2006 nobody knew what frequency ranges such an antenna needed to support, or the antenna dimensions needed to support resonances for those unknown frequencies. '677 Patent, 25:9-12 (antenna has to support "radiation modes" for "frequency bands").

The '429 application's suggestion that 4G would include bands within a 2-11 GHz frequency range (Baliarda-543, [0212]) provides no description of the 698-806 MHz frequency range that would later include LTE bands 12 to 14 (and which Fractus relies upon here). Indeed, the '429 application states that "the integration of an antenna system into the MFWD 100 is further complicated by the presence in the MFWD 100 of additional antennas… for reception of… TV[.]" Baliarda-543, [0096]. This ***expressly excluded*** an antenna receiving signals at 698-806 MHz from the claimed "antenna system" because on December 21, 2006 the 698-806 MHz frequency range was allocated to television and could not be used for cellular communication. From the '429 application's description no POSA would have envisioned or recognized the 698-806 MHz frequency range as part of a 4G genus.

The next application in the ’677 patent’s priority chain was U.S. Patent Application No. 14/246,491, filed April 7, 2014 as a continuation of the ’429 application. ’677 Patent, code (63). Thus, the earliest possible effective filing date for Asserted Claims 1-5 and 12-20 is **April 7, 2014**.

B. Relevant Prior Art

Defendants identifies the following prior art known to Defendants to anticipate or render obvious the ’677 Patent under at least pre-AIA 35 U.S.C. §§ 102(a), (b), (e), and/or (g), or AIA 35 U.S.C. § 102(a), either expressly or inherently as understood by a POSA, or based on Fractus’s apparent interpretation of the claims.

1. Patents and Printed Publications

The following patents and patent application publications constitute prior art to the ’677 Patent at least under pre-AIA 35 U.S.C. § 102(e), or AIA 35 U.S.C. § 102(a) because they are issued patents or patent applications that name another inventor and were effectively filed before either of March 27, 2020 or June 19, 2006. Some of these patents and publications are also prior art under pre-AIA §§ 102(a) and (b) because they issued or published before either of March 27, 2020 or June 19, 2006, including in some instances more than a year prior to those dates under § 102(b).

- U.S. Patent No. 6,670,923 (Kadambi”), issued December 30, 2003, and filed July 24, 2002
- U.S. Patent No. 6,943,746 (“Talvitie”), issued September 13, 2005, and filed October 23, 2003
- U.S. Patent No. 7,023,387 (“Wen”), issued April 4, 2006, and filed May 13, 2004
- U.S. Patent No. 7,058,434 (“Wang434”), issued June 6, 2006, and filed November 18, 2003
- U.S. Patent No. 7,102,577 (“Richard”), issued September 5, 2006, and filed September 30, 2004

- U.S. Patent No. 7,109,924 ("Vance"), issued September 19, 2006, and filed May 18, 2004
- U.S. Patent No. 7,139,533 ("Katagishi"), issued November 21, 2006, and filed August 15, 2003
- U.S. Patent No. 7,142,824 ("Kojima"), issued November 28, 2006, and filed August 28, 2003
- U.S. Patent No. 7,205,942 ("Wang"), issued April 17, 2007, and filed July 6, 2005
- U.S. Patent No. 7,298,339 ("Ollikainen339"), issued November 20, 2007, and filed June 27, 2006
- U.S. Patent No. 7,432,860 ("Huynh"), issued October 7, 2008, and filed May 17, 2006
- U.S. Patent No. 7,548,208 ("Dou '208"), issued June 16, 2009, and filed February 24, 2006
- U.S. Patent No. 7,683,839 ("Ollikainen839"), issued March 23, 2010, and filed June 30, 2006
- U.S. Patent No. 7,724,194 ("Black"), issued May 25, 2010, and filed June 30, 2006
- U.S. Patent No. 7,801,556 ("Tran"), issued September 21, 2010, and filed August 26, 2005
- U.S. Patent Application Publication No. 2002/0094789 A1 ("Harano"), published July 18, 2002, and filed January 14, 2002
- U.S. Patent Application Publication No. 2003/0214446 A1 ("Shehab"), published November 20, 2003, and filed May 14, 2002
- U.S. Patent Application Publication No. 2004/0001021 A1 ("Choo"), published January 1, 2004, and filed December 16, 2002
- U.S. Patent Application Publication No. 2004/0051669 A1 ("Rutfors"), published March 18, 2004, and filed July 10, 2001
- U.S. Patent Application Publication No. 2004/0125016 A1 ("Atwood"), published July 1, 2004, and filed December 27, 2002
- U.S. Patent Application Publication No. 2004/0145528 A1 ("Mukai"), published July 29, 2004, and filed November 25, 2003

- U.S. Patent Application Publication No. 2006/0214857 A1 ("Ollikainen857"), published September 28, 2006, and filed March 24, 2006

- U.S. Patent Application Publication No. 2006/0238433 A1 ("Chou"), published October 26, 2006, and filed March 1, 2005

- U.S. Patent Application Publication No. 2006/0290575 A1 ("Pelzer"), published December 28, 2006, and filed April 29, 2004

- U.S. Patent Application Publication No. 2007/0200773 A1 ("Dou"), published August 30, 2007, and filed February 24, 2006

- Chinese Patent No. CN2765337Y ("Wei"), issued March 15, 2006, and filed February 6, 2005

- Chinese Patent Publication No. CN1452271A, published October 29, 2003, and filed April 19, 2002

- Chinese Patent Publication No. CN1728455A, published February 1, 2006, and filed July 1, 2005

- Chinese Patent Publication No. CN1729593A, published February 1, 2006, and filed October 28, 2003

- European Patent Publication No. EP1471596A1 ("Ying EP"), published October 27, 2004, and filed April 26, 2003

- International PCT Publication No. WO 2004/042868 A1 ("Castany868"), published May 21, 2004, and filed November 7, 2002

- International PCT Publication No. WO 2005/076409 A1 ("Castanny409"), published August 18, 2005, and filed January 28, 2005

- International PCT Publication No. WO 2006/002849 A1 ("Rozan"), published January 12, 2006, and filed June 27, 2005

- ETSI TS 121 101 V6.0.0 (2004-12) Technical Specification: Universal Mobile Telecommunications System (UMTS); Technical Specifications and Technical Reports for a UTRAN-based 3GPP system (3GPP TS 21.101 version 6.0.0 Release 6)

- ETSI TS 125 101 V6.5.0 (2004-09) Technical Specification: Universal Mobile Telecommunications System (UMTS); User Equipment (UE) radio transmission and reception (FDD) (3GPP TS 25.101 version 6.5.0 Release 6)

- ETSI TS 125 102 V6.0.0 (2003-12) Technical Specification: Universal Mobile Telecommunications System (UMTS); User Equipment (UE) radio transmission and reception (TDD) (3GPP TS 25.102 version 6.0.0 Release 6)

- ETSI TS 125 308 V6.2.0 (2004-09) Technical Specification: Universal Mobile Telecommunications System (UMTS); UTRA High Speed Downlink Packet Access (HSDPA); Overall description; Stage 2 (3GPP TS 25.308 version 6.2.0 Release 6)

- ETSI TS 145 005 V4.3.0 (2001-04) Technical Specification: Digital cellular telecommunications system (Phase 2+); Radio transmission and reception (3GPP TS 45.005 version 4.3.0 Release 4)

- H. Nakano et al., "An Inverted FL Antenna for Dual-Frequency Operation," IEEE Transactions on Antennas and Propagation, vol. 53, no. 8, pp. 2417-2421, Aug. 2005 ("Nakano")

- IEEE Std. 802.11a-1999, Supplement to the IEEE Standard for Information Technology—Telecommunications and information exchange between systems—Local and metropolitan area networks—Specific requirements— Part 11: Wireless LAN Medium Access Control (MAC) and Physical Layer (PHY) specifications: High-speed Physical Layer in the 5 GHz Band (Dec. 30, 1999)

- IEEE Std. 802.11b-1999, Supplement to the IEEE Standard for Information Technology—Telecommunications and information exchange between systems—Local and metropolitan area networks—Specific requirements— Part 11: Wireless LAN Medium Access Control (MAC) and Physical Layer (PHY) specifications: Higher-Speed Physical Layer Extension in the 2.4 GHz Band (Jan. 20, 2000)

- M.K.A. Rahim et al., "Microstrip Sierpinski carpet antenna using transmission line feeding," 2005 Asia-Pacific Microwave Conference Proceedings, Suzhou, China, 2005, pp. 4 pp.-, doi: 10.1109/APMC.2005.1606382

- M.Z. Azad & M. Ali, "A New Class of Miniature Embedded Inverted-F Antennas (IFAs) for 2.4 GHz WLAN Application," IEEE Transactions on Antennas and Propagation, vol. 54, no. 9, pp. 2585-2592, Sept. 2006, doi: 10.1109/TAP.2006.880710

- N. Sala, "Fractal models in architecture: A case of study," Proceedings International Conference on Mathematics for Living, pp. 266-272, November 2000

- P. Ciais et al., "Compact internal multiband antenna for mobile phone and WLAN standards," Electronic Letters, Vol. 40, No. 15, pp. 920-921 (2004) ("Ciais Multiband")

- P. Ciais et al., "Design of an Internal Quad-Band Antenna for Mobile Phones," IEEE Microwave and Wireless Components Letters, Vol. 14, No. 4, pp. 148-150 (April 2004) ("Ciais Quad-Band")

- Specification of the Bluetooth System version 2.0, volume 2 (issued Nov. 4, 2004)

- X. Jing et al., "Compact Planar Monopole Antenna for Multi-band Mobile Phones," 2005 Asia-Pacific Microwave Conference Proceedings, vol. 4, pp. 2657-2660, IEEE, 2005 ("Jing")

- Application No. 11/614,429 ('677 Patent, code (63)), filed December 21, 2006, published January 24, 2008 (U.S. Patent Pub. No. 2008/018543), filed December 21, 2006, "Baliarda-543")

2. Prior Art Products or Systems

The following products or systems constitute prior art to the '677 Patent under at least pre-AIA 35 U.S.C. §§ 102(a), (b) and/or (g)(2) and/or AIA 35 U.S.C. § 102(a) because they were known or used by others, in public use or on sale, otherwise available to the public, or invented by another in this country prior the '677 Patent's priority date, or in the case of pre-AIA § 102(b) more than a year before that date:

- BenQ P50
- Cingular 8125/HTC Wizard
- Siemens SX66/HTC Blue Angel
- Blackberry 7290
- Blackberry 7130c
- Blackberry 7130e
- HP Compaq nc6400
- Sony Ericsson Z520a
- Motorola PEBL
- Motorola V360
- Dell Latitude D820
- Lenovo T60
- Blackberry 8700

As reflected in the accompanying claim charts and exhibits, each of the ’677 Prior Art Products qualifies as prior art under § 102 because it was either: (1) known or used by others, in public use, on sale, or otherwise available to the public in the United States before the alleged priority date, or (2) reduced to practice in the United States before the alleged priority date without being abandoned, suppressed, or concealed. To the extent the ’677 Patent is not entitled to the alleged priority date but instead to later priority dates, each of the ’677 Prior Art Products qualifies under pre-AIA § 102 or AIA § 102 for the same reasons as to those later priority dates. To support the substantive disclosure and status is prior art for each of the ’677 Prior Art Products, Defendants reserve the right to rely on the following sources of evidence, including those sources expressly cited in the accompanying claim charts and exhibits:

- Samples, teardowns, diagrams, images, and the like, including any such materials Defendants or third parties have or will produce or make available for inspection;
- Documents relating to the prior art products, including any documents Defendants or third parties have produced or will produce;
- Testimony of Defendants’ or third parties’ employees and former employees;
- Fractus’s Infringement Contentions and expert reports and testimony in the current case or prior cases; and
- Defendants’ expert reports and testimony.

Defendants reserve the right to rely on other sources of evidence identified as discovery in Defendants’ investigation progresses.

C. Anticipation and Obviousness

Defendants attach Exhibits D-01 through D-14, which provide exemplary disclosures showing how the prior art anticipates and/or renders obvious the ’677 Asserted Claims. The charts identify primary references, and, in some cases, secondary references, and anticipation and obviousness contentions. Defendants may rely on any of the primary references identified in

Fractus Exhibit 2002
Resmed v. Fractus
Page 64 of 109

Exhibits D-01 through D-14, in combination with any secondary reference identified in those exhibits, as well as in Section V.B supra. Those exhibits also identify each such combination, and the motivation to combine such items with a reasonable expectation of success.

In addition, Defendants incorporate by reference the petitions, petitioner papers, and arguments in *Inter Partes* Review No. IPR2025-01026 (filed by Geotab June 6, 2025)), as well as any future *Inter Partes* Reviews and *Ex Parte* Reexaminations, and all documents cited or referenced therein, which challenge the validity of the ’677 patent.

By way of particular example, and not limitation, the ’677 Asserted Claims would have been anticipated or obvious under pre-AIA §§102-103 based on each of the following references or combinations of references, as reflected and discussed in the accompanying claim charts:

- **Dou (addressed in Exhibit D-01)**
- **Wei (addressed in Exhibit D-02)**
- **Castany868 (addressed in Exhibit D-03)**
- **Talvitie (addressed in Exhibit D-04)**
- **BenQ P50 (addressed in Exhibit D-05)**
- **Cingular 8125/HTC Wizard (addressed in Exhibit D-06)**
- **Dou, alone or in view of Ciais Quad-Band and/or Nakano (addressed in Exhibit D-07)**
- **Siemens SX66/HTC Blue Angel (addressed in Exhibit D-08)**
- **Blackberry 7290, alone or in view of Blackberry 7130e and/or Dou ‘208 (addressed in Exhibit D-09)**
- **Blackberry 7130c (addressed in Exhibit D-10)**
- **HP Compaq nc6400, alone or in view of Gaucher (addressed in Exhibit D-11)**

- **Sony Ericsson Z520a, alone or in view of Motorola V360 and/or Vance (addressed in Exhibit D-12)** [11]
- **Dell Latitude D820, alone or in view of Gaucher (addressed in Exhibit D-13)**
- **Lenovo T60 (addressed in Exhibit D-14)**

1. Anticipation and Obviousness Based on Baliarda-543

The published parent case Baliarda-543 is AIA §102(a)(1) prior art to claims 1-5 and 12-20 because it published January 24, 2008, more than a year before the earliest possible April 7, 2014 effective-filing date. Baliarda-543, code (43). Baliarda-543 has the same specification as the '677 patent and anticipates claims 1-5 and 12-20 as shown below. Because Baliarda-543's specification is materially identical to the '677 patent, it discloses species within each Challenged Claim even if it does not disclose the full scope of each claim to a broad genus. *See Chester v. Miller*, 906 F.2d 1574, 1577 (Fed. Cir. 1990) ("no impermissible anomaly or logical inconsistency" in treating a parent application as prior art that invalidates "broader claims" it did not adequately describe). To the extent the Court finds that Baliarda-543 does not expressly recite any claimed subject matter—such as limitation 12[q] below—it renders such claim obvious.

'677 claim limitation	Corresponding Disclosure in Baliarda-543
1[pre]	Abstract, [0002], [0037], claim 16
1[a]	Abstract, [0082]-[0084], [0097], [0152], [0212]-[0215], claim 16
1[b]	[0082]-[0084], [0213]-[0217]
1[c]-[d]	[0032]-[0035], [0098]-[0100], [0103], [0117]-[0118], [0212]-[0215], [0265], [0300], [0324]-[0325], Figs. 12A, 19A
1[e]-[f]	*See* 1[c]-[d]; [0040], [0092], [0098]-[0100], [0212]-[0215], [0241]

[11] Defendants reserve the right to additionally rely on the Motorola PEBL device in combination with the Sony Ericsson Z520a.

’677 claim limitation	Corresponding Disclosure in Baliarda-543
1[g]-[h]	[0137], [0141]-[0144], [0213]-[0215], Fig. 12B
1[i], [j]	[0181]-[0183], [0213]
1[k], [l]	[0212]-[0215]
1[m]	[0198], [0215]
2	[0141]-[0149], [0270], Fig. 12A
3	*See* claim 2
4	[0103], [0212]-[0215]
5[a]	*See* 1[g]-[h]
5[b], [c]	*See* 1[i]-[j]
12[pre]	*See* 1[pre]
12[a]	*See* 1[a]
12[b]	*See* 1[b]
12[c]-[f]	*See* 1[c]-[d]
12[g]	*See* 1[e]-[f]
12[h]-[i]	*See* 1[g]-[h]
12[j]-[k]	*See* 1[i]-[j]
12[l]	*See* 1[e]-[f]
12[m]	*See* 1[e]-[f]
12[n]	[0114]-[0116], [0226], Fig. 1B
12[o]-[p]	[0133]-[0134], [0227]
12[q]	[0154]-[0162], [0213]
13	*See* claim 2
14	*See* claim 2

’677 claim limitation	Corresponding Disclosure in Baliarda-543
15	[0213]
16[a]	*See* 1[g]-[h]
16[b]	*See* 1[i]-[j]
17	*See* claim 2

For Limitation 12[q], Baliarda-543 at [0154]-[0162] says that the G2 grid and the G2 cell aspect ratio are determined based on the aspect ratio of the antenna rectangle. This describes a 9 column by (2n + 1) row G2 grid of cells—e.g., having an odd number (2n + 1) of rows where n is an integer between 0 and 5 (for 1 to 11 rows)—wherein the aspect ratio of the cells is as close to 1 as possible. Baliarda-543 therefore describes an antenna rectangle wherein the G2 grid has 9 columns by 1 row or 3 rows, with each cell as square as possible, which means that Baliarda-543 separately describes an antenna rectangle with an aspect ratio on the order of 9 or 3, e.g., more than 2 as recited in 12[q].

D. Invalidity Under 35 U.S.C. § 112

1. Indefiniteness

a. “ 4G communication standard / communication standard(s)”

“4G communication standard / communication standard(s)” as recited in claims 1, 4, and 12 of the ’677 Patent is indefinite. The specification does not define or provide sufficient explanation for what is mean by the term “4G.” No 4G standard existed as of the filing date, and at that time, the identification of possible 4G standards remained undefined and unlimited in scope. As a result, the term “4G communication standard / communication standard(s) ” is indefinite for being unclear, vague, and ambiguous for failing to provide reasonable certainty

concerning the scope of the claimed invention. The claims in which this term appears (whether directly or via dependency) are thus invalid.

b. "receive signals [from / employing] a 4G communication standard"

"receive signals [from / employing] a 4G communication standard " as recited in claim 4 and 12 of the '677 Patent is indefinite. This claim term does not appear anywhere in the specification of the '677 Patent. The plain text of the claim language requires the antenna receive signals from a standard. This is indefinite because a standard is not capable of transmitting signals. As a result, the term " receive signals from a 4G communication standard" is indefinite for being unclear, vague, and ambiguous for failing to provide reasonable certainty concerning the scope of the claimed invention. The claims in which this term appears (whether directly or via dependency) are thus invalid.

c. "complexity factor"

"complexity factor" as recited in claims 1, 6, 9, 12, and 16 of the '677 Patent is indefinite. The specification provides a POSA with multiple methods to derive the various numerical inputs when calculating a "complexity factor," which then result in materially different outcomes for the same antenna design. Specifically, the specification provides multiple methods for deriving the antenna contour and for selecting the number of columns and rows for the grid overlaid on top of the antenna contour which are required inputs to compute the "complexity factor." Namely, there are at least two ways of determining an antenna contour of an antenna: (1) the perimeter of the planar elements (and aperture) intersecting the antenna rectangle, and/or, (2) the orthogonal projection of the non-planar elements onto the rectangle. In addition, the specification fails to teach the proper selection of the number of columns and rows for grid G_2. These differences can and do result in the same antenna either meeting or not meeting the claim

limitation. As a result, the term "complexity factor" is indefinite for being unclear, vague, and ambiguous for failing to provide reasonable certainty concerning the scope of the claimed invention. The claims in which this term appears (whether directly or via dependency) are thus invalid.

d. "proximate"

"proximate" as recited in claims 1, 6, 12, and 15 (and unasserted claim 20) of the '677 Patent is indefinite because it is a term of degree and the patent fails to provide sufficient guidance for determining its scope. When a claim uses a term of degree, the intrinsic record must provide "objective boundaries" sufficient to allow POSAs to discern the scope of the claim with "reasonable certainty." *Nautilus*, 572 at 901; *see also Berkheimer*, 881 F.3d at 1364.

Claim 12[12] is exemplary and recites, in part:

> 12. A wireless device comprising:
>
> a ground plane;
>
> a first antenna within the wireless device… the first antenna being **proximate** to a first short side of a ground plane rectangle enclosing the ground plane…;
>
> a second antenna within the wireless device….
>
> 15. The wireless device of claim 12, wherein the second antenna is **proximate** to a second short side of the ground plane rectangle that is opposite to the first short side of the ground plane rectangle.

Nothing in the claims or intrinsic record provide guidance regarding what degree of closeness does qualify, and what degree of closeness does not qualify, as "proximate." The word "proximate" does not appear anywhere in the specification of the '677 Patent. *See, e.g.*, '677 Patent at FIGS. 5A-5C, 14:48-65 ("the antenna system of the present invention advantageously places a feeding point of the antenna system, preferably a feeding point responsible for the

[12] '677 Patent claim 15 is also reproduced below.

Fractus Exhibit 2002
Resmed v. Fractus
Page 70 of 109

operation of the antenna system in its lowest frequency band, in such a way that a contact terminal of the MFWD 100 is located near an edge of a ground plane encompassed by the ground plane rectangle."), 25:27-31 ("In some cases it would be advantageous to place the 4G antenna substantially close to the edge that is opposite to the shorter edge. In other cases it would be advantageous to place the 4G antenna substantially close to an edge that is adjacent to the shorter edge."), 28:63-29:6 ("For reasons of ergonomics, it is advantageous in the examples of FIG. 5 to select a corner of the antenna rectangle close to the left edge of the MFWD 500. The upper left corner of the antenna rectangle 505 is selected as the feeding point corner in the case of FIG. 5A, while the lower left corner of the antenna rectangle 506 is selected as the feeding point corner in the case of FIG. 5B. In these two examples the corners designated as feeding point corners 505, 506 are also substantially close to a short edge of a ground plane rectangle (not depicted in FIG. 5) that encloses the ground plane layer 502."), claims 1, 6, and 20 (reciting similar limitations as claims 12 and 15).

For example, reviewing the depicted examples in the specification, given that "feeding corner 1211" is described as "**near** a corner of the ground plane rectangle" (33:42-47, FIG. 12B), "slot 1704" is described as having a "first end 1730 **near** the left side of the antenna rectangle" (39:58-65, FIG. 17D), and the "feeding point corners 505, 506 are also **substantially close** to a short edge of a ground plane rectangle (not depicted in FIG. 5)" (FIGS. 5A-5C, 28:63-29:6), it is not clear what distance is too far away to no longer fall within the scope of "proximate." *See Clear Imaging*, 2020 WL 6384731, at *20-*21. Indeed, the '677 Patent appears to treat "near" (FIGS. 12B, 17D) as different in scope from "substantially close" (FIGS. 5A-5C). However, given that "proximate" is not a term of art, and that the intrinsic records lacks any "objective boundaries" for a POSA to understand the degrees of closeness that do, and the degrees of

closeness that do not, qualify as "proximate," the term is indefinite for failing to provide reasonable certainty concerning the scope of the claimed invention. The claims in which this term appears (whether directly or via dependency) are thus invalid.

2. Lack of Written Description

The '677 Asserted Claims do not comply with the first paragraph of § 112 because the specification does not "contain a written description of the invention, and of the manner and process of making and using it, in such full, clear, concise, and exact terms as to enable any person skilled in the art to which it pertains, or with which it is most nearly connected, to make and use the same." In particular, the '677 Patent fails to provide adequate written description support for claims 1, 4, 6, 9, 12, 15, and 16. As described above, the specification does not include reference to or adequate support for "4G communication standard / communication standard(s)," "receive signals [from / employing] a 4G communication standard," "complexity factor," and "proximate." Accordingly, the claims in which these terms appear (whether directly or via dependency) are invalid for lack of written description support in the specification.

VI. '200 PATENT

A. Priority Date

1. Overview

The Asserted Claims of the '200 Patent are not entitled to a priority date earlier than the '200 Patent's actual filing date (i.e., Apr. 30, 2021). Despite having the burden of proof, Fractus has offered no evidence that the '200 Patent is entitled to an earlier priority date. Geotab[13] understands, however, that Fractus maintains in its Infringement Contentions that the Asserted

[13] The '200 Patent is only asserted against Geotab.

Fractus Exhibit 2002
Resmed v. Fractus
Page 72 of 109

Claims of the ’200 Patent are entitled to an earlier priority date of June 19, 2006. While Fractus has offered no evidence for that priority date, and Geotab does not agree with it, the relevant prior art discussed below (except for Baliarda-543, as discussed below) pre-dates that earlier alleged priority date.

2. The ’200 Patent Is Not Entitled to Priority Before April 7, 2014.

The ’200 patent is a continuation of, *inter alia*, Application No. 11/614,429 (“the ’429 application”) (’200 Patent, code (63)), filed December 21, 2006, published January 24, 2008 (U.S. Patent Pub. No. 2008/018543, “Baliarda-543”).

For any Asserted Claim to be entitled to the ’429 application’s filing date, the ’429 application must provide written description supporting that claim. *Arthrex v. Smith & Nephew*, 35 F.4th 1328, 1343 (Fed. Cir. 2022).

Written description requires that the disclosure within the four corners of ’429 application “reasonably conveys to [a POSA] that the inventor had possession of the [later-claimed] claimed subject matter as of the filing date,” e.g., December 21, 2006. *Regents of the Univ. of Cal. v. Broad Inst.*, No. 22-1653, slip op., 24 (Fed. Cir. May 12, 2025); *Ariad Pharms. v. Eli Lilly*, 598 F.3d 1336, 1351 (Fed. Cir. 2010) (*en banc*) (“The test requires an objective inquiry into the four corners of the specification from the perspective of a [POSA] to show that the inventor actually invented the invention claimed.”) (cleaned up).

The written description must support the full scope of the claimed subject matter. *Arthrex*, 35 F.4th at 1343-1344 (no written description supporting full scope of “first member including ***an eyelet***” where priority document failed to describe a flexible eyelet); *Rivera v. Int’l Trade Comm’n*, 857 F.3d 1315, 1319-1321 (Fed. Cir. 2017) (specification “did not provide the necessary written description support for the ***full breadth*** of the asserted claims” where claims were broadly drawn to a “container… adapted to hold brewing material” but the specification

Fractus Exhibit 2002
Resmed v. Fractus
Page 73 of 109

only disclosed a "pod adapter assembly" or "receptacle" designed to hold a "pod"), 1322 ("The specification here does not teach a container with an integrated filter, and so, does not provide written description support for such a container[.]"); *ICU Medical v. Alaris Med. Sys.*, 558 F.3d 1368, 1377-78 (Fed. Cir. 2009) (no written description for full scope of "a needleless connector valve comprising a body and a seal" without "any spike limitation" where priority document only described medical valves ***with*** spikes); *Google LLC v. Valtrus Innovations Ltd.*, IPR2022-01406, Paper 40, 60-61 (Apr. 3, 2024) (no written description supporting full scope of "computing domains" where priority document provided no description of virtual machines).

Each of the Asserted Claims discussed in this section contains the term "4G Communication standard(s)," either directly or by dependency. In December of 2006, there were discussions ongoing about 4G but what a 4G communication system would look like was undefined. Only years later did the International Telecommunication Union's ("ITU") International Mobile Telecommunications ("IMT") Advanced in Report ITU-R M.2134, adopted November 2008, define the requirements for a 4G communication system. An LTE communication ***standard*** was not defined until years after the '429 application was filed. *See* 3GPP TS 36.101 v8.4.0 (2008-12) Technical Specification: 3rd Generation Partnership Project; Technical Specification Group Radio Access Network; Evolved Universal Terrestrial Radio Access (E-UTRA); User Equipment (UE) radio transmission and reception (Release 8), 2008 ("3GPP TS 36.101 v8.4.0"); Ericsson white paper, "LTE—an introduction," no. 284 23-3124 Uen Rev B (June 2009) ("LTE—an introduction"), 7 (LTE specification completed March 2009).

Claims 1-5 require that an antenna be "*configured to transmit and receive signals from a 4G communication standard*" 1[g], ***claims 6-10*** require that an antenna be "*configured to provide*

operation in at least four frequency bands being used by 4G communication standards" ([6.b]), and ***claims 11-20*** require an antenna be "*configured to provide operation in at least three frequency bands being used by 4G communication standards*" 11[d]. In litigation, Fractus argued that the claimed "*4G communication standard*" is met by LTE. The Court should hold Fractus to its litigation position that an LTE band is a "*frequency band associated with*"—e.g., ***being used by***— "*a 4G communication standard*," which is fatal to the patentability of the claims challenged in Ground 2 for reasons explained below.

The '429 application provides no written description supporting the full scope of an "*antenna... being configured to transmit and receive signals from a 4G communication standard*" ([1.d]) or an "*antenna… configured to provide operation in at least [three or four] frequency bands being used by 4G communication standards*" 6[d] and 11[d] when the "*4G communication standard*" encompasses LTE. The '429 application provides no description of LTE, LTE frequency bands, or the 3GPP Technical Specification 36.101 V8.4.0 (2008-12)—published years ***after*** the '429 application's filing—that defines LTE and its frequency bands. Baliarda-543; 3GPP TS 36.101 v8.4.0; LTE—an introduction, 7 (LTE specification completed in March 2009); Pages from E. Dahlman et al., 3G Evolution: HSPA and LTE for Mobile Broadband (Academic Press 2d ed. 2008) ("Dahlman"), 497-502.

On December 21, 2006, the LTE frequency bands ***had not even been defined*** and what frequency ranges they might eventually use was an "open issue." 3GPP TR 23.882 V1.8.0 (2007-02) Technical Report: 3rd Generation Partnership Project; Technical Specification Group Services and System Aspects; 3GPP System Architecture Evolution: Report on Technical Options and Conclusions (Release 7) (February 2007 report), 112 ("Open issues… Is the evolved access system envisioned to work on new and/or existing frequency band?"); 3GPP TR 23.882

V1.6.1 (2006-11) Technical Report: 3rd Generation Partnership Project; Technical Specification Group Services and System Aspects; 3GPP System Architecture Evolution: Report on Technical Options and Conclusions (Release 7) (November 2006 report), 108 (same); 3GPP TR 23.882 V1.2.3 (2006-06) Technical Report: 3rd Generation Partnership Project; Technical Specification Group Services and System Aspects; 3GPP System Architecture Evolution: Report on Technical Options and Conclusions (Release 7) (June 2006 report), 84 (same); Dahlman, 497-502 (LTE frequency bands); 3GPP TS 36.101 v8.4.0(December 2008 document defining LTE bands), LTE—an introduction, 7 (LTE specification completed in March 2009).

Indeed, LTE band 12 (699-716 MHz uplink and 728-746 MHz downlink, Dahlman, 498 (Table 20.1))—whose uplink portion Fractus ***expressly relies upon*** for meeting limitation 11[d] in its complaint against Geotab (D.I. 1, Complaint, Fractus, S.A., v. Geotab Inc., No. 2:24-cv-01008 (E.D. Tex. Dec. 6, 2024), 27; *see generally* Fractus's Infringement Contentions—is part of a frequency range (698-806 MHz) that was ***not even available for use with mobile communications*** (let alone LTE) until WRC-07 in October-November 2007—***nearly a year after*** Fractus's December 21, 2006 filing date for the '429 application. U.S. Department of State, United States Delegation Report: World Radiotelecomunications Conference 2007 (2007), available at https://2001-2009.state.gov/documents/organization/108955.pdf (visited June 12, 2025), 1 (WRC-07 took place in Geneva, Switzerland between October 22 and November 16, 2007); Dahlman, 501 ("20.1.2 New frequency bands… ***WRC-07 identified additional frequency bands*** for IMT, which encompasses both IMT-2000 and IMT-Advanced. ***Several bands were defined by WRC-07*** that will be available partly or fully for deployment on a global basis:… ***698-806 MHz was allocated to mobile service*** and identified to IMT to some extent in all regions. Together with the band 806-960 MHz identified at WRC-2000, it forms a wide

frequency range from 698 to 960 MHz that is partly identified to IMT in all regions, with some variations."). Within this 698-806 MHz range defined for mobile communications at WRC-07, LTE bands 12, 13, and 14 (EX1039, 498 (Table 20.1)) were "defined for operation mainly for US allocations." Dahlman, 501.

Moreover in July 2007—before WRC-07—the spectrum at 698-806 MHz (spanning the frequencies where LTE bands 12, 13, and 14 were later defined) ***was occupied by television broadcasters*** in TV Channels 52-69. EX1045, 3. In other words, when PO filed the '429 application on December 21, 2006 the 698-806 MHz frequency range ***was not available*** for use in ***any*** cellular communication, let alone LTE or 4G communication.

Because the LTE frequency band definition was an "open issue" and the frequency ranges for LTE bands had not been selected, a POSA reading the '429 application on December 21, 2006 would have concluded that the applicants did ***not*** possess a wireless device with an antenna configured to support an LTE frequency band (a "*frequency band[]… used by a 4G communication standard*") or "*configured to transmit and receive*" LTE signals ("*signals from a 4G communication standard*"), let alone one that also met the complexity factors and other requirements of the Asserted Claims. On December 21, 2006, when the '429 application was filed, no one could have determined whether any antenna disclosed in the application was configured to support a "*frequency band[] used by*" LTE, or to send/receive LTE signals, because the LTE frequency bands had not yet even been defined.

A POSA would have concluded that the applicants did not possess an antenna configured to send or receive signals in the 698-806 MHz spectrum—including LTE band 12 that Fractus relies upon here—for communication with any "*4G communication standard*" because those frequencies were not usable for any mobile device communications at the time of filing. In

Fractus Exhibit 2002
Resmed v. Fractus
Page 77 of 109

short, the applicants did not possess, and the priority documents cannot "describe," claimed subject matter—antennas sending and receiving signals using LTE protocols on LTE frequency bands, neither of which existed at the time.

The '429 application thus fails to provide written description for the full scope of "*frequency band[]… used by a 4G communication standard*" encompassing an LTE frequency band, or the full scope of "*antenna… configured to transmit and receive signals from a 4G communication standard*" that includes LTE (and LTE bands 12, 13, and 14). *Arthrex*, 35 F.4th at 1343-44; *Rivera*, 857 F.3d at 1321-22; *ICU Medical*, 558 F.3d at 1377. The Asserted Claims at issue here are thus not entitled to priority to the '429 application's filing date. *Arthrex*, 35 F.4th at 1343.

A specification does not satisfy the written description requirement for a broad claim by merely describing a single embodiment. In *Smith & Nephew v. Arthrex*, IPR2017-00275, Paper 36, 27-28 (May 2, 2018), the claim recited a "first member" that covered both a flexible loop and a fixed aperture. The priority documents only disclosed a fixed aperture. The Board refused to give the claim an earlier effective-filing date because the priority documents did not provide a written description supporting the full scope of the claim including the flexible loop. *Id*., 40; *generally id*., 27-40. The Federal Circuit affirmed. *Arthrex*, 35 F.4th at 1343-1344.

Even if the '429 application describes a species of 4G, that is not enough to support the broad genus (antenna working with 4G communication standard) that the '200 patent claims. Written description for the 4G genus requires either (1) "structural features common to the members" of the genus or (2) "a representative number of species falling within the scope" of the genus so that a POSA "can visualize or recognize the members" of it. *Ariad*, 598 F.3d at 1350 (internal citation omitted).

The ’429 application fails both *Ariad* tests. The ’200 patent claims an antenna with specific “complexity factors” related to the antenna’s operating frequencies, but the ’429 application never teaches a POSA how to make or identify such an antenna for LTE because LTE did not exist. Based on the ’429 application’s disclosure no POSA would have known how to design an LTE antenna, because in December 2006 nobody knew what frequency ranges such an antenna needed to support, or the antenna dimensions needed to support resonances for those unknown frequencies. ’200 Patent, 25:23-26 (antenna has to support “radiation modes” for “frequency bands”). The ’429 application’s suggestion that 4G would include bands within a 2-11 GHz frequency range (Baliarda-543, [0212]) provides no description of the 698-806 MHz frequency range that would later include LTE bands 12 to 14 (and which Fractus relies upon here). And from the ’429 application’s description no POSA would have envisioned or recognized the 698-806 MHz frequency range as part of a 4G genus because in December 2006 that frequency range was allocated to television networks and could not be used for cellular communication.

The next application in the ’200 patent’s priority chain was U.S. Patent Application No. 14/246,491, filed April 7, 2014 as a continuation of the ’429 application. ’200 Patent, code (63). Thus, the earliest possible effective filing date for the Asserted Claims is **April 7, 2014**.

B. Relevant Prior Art

Geotab identifies the following prior art known to Geotab to anticipate or render obvious the ’200 Patent under at least pre-AIA 35 U.S.C. §§ 102(a), (b), (e), and/or (g), or AIA 35 U.S.C. § 102(a), either expressly or inherently as understood by a POSA, or based on Fractus’s apparent interpretation of the claims.

Fractus Exhibit 2002
Resmed v. Fractus
Page 79 of 109

1. Patents and Printed Publications

The following patents and patent application publications constitute prior art to the ’200 Patent at least under pre-AIA 35 U.S.C. § 102(e), or AIA 35 U.S.C. § 102(a) because they are issued patents or patent applications that name another inventor and were effectively filed before either of April 30, 2021 or June 19, 2006. Some of these patents and publications are also prior art under pre-AIA §§ 102(a) and (b) because they issued or published before either of April 30, 2021 or June 19, 2006, including in some instances more than a year prior to those dates under § 102(b).

- U.S. Patent No. 6,239,765 (“Johnson”), issued May 29, 2001, and filed August 24, 1999
- U.S. Patent No. 7,548,208 (“Dou ’208”), issued June 16, 2009, and filed February 24, 2006
- U.S. Patent Application Publication No. 2004/0125018 A1 (“Ramasamy”), published July 1, 2004, and filed December 27, 2002
- U.S. Patent Application Publication No. 2006/0082503 A1 (“Gaucher”), published April 20, 2006, and filed October 18, 2004
- U.S. Patent Application Publication No. 2006/0214857 A1 (“Ollikainen857”), published September 28, 2006, and filed March 24, 2006
- U.S. Patent Application Publication No. 2007/0200773 A1 (“Dou”), published August 30, 2007, and filed February 24, 2006
- ETSI TS 121 101 V6.0.0 (2004-12) Technical Specification: Universal Mobile Telecommunications System (UMTS); Technical Specifications and Technical Reports for a UTRAN-based 3GPP system (3GPP TS 21.101 version 6.0.0 Release 6)
- ETSI TS 125 101 V6.5.0 (2004-09) Technical Specification: Universal Mobile Telecommunications System (UMTS); User Equipment (UE) radio transmission and reception (FDD) (3GPP TS 25.101 version 6.5.0 Release 6)
- ETSI TS 125 102 V6.0.0 (2003-12) Technical Specification: Universal Mobile Telecommunications System (UMTS); User Equipment (UE) radio transmission and reception (TDD) (3GPP TS 25.102 version 6.0.0 Release 6)

- ETSI TS 125 308 V6.2.0 (2004-09) Technical Specification: Universal Mobile Telecommunications System (UMTS); UTRA High Speed Downlink Packet Access (HSDPA); Overall description; Stage 2 (3GPP TS 25.308 version 6.2.0 Release 6)

- ETSI TS 145 005 V4.3.0 (2001-04) Technical Specification: Digital cellular telecommunications system (Phase 2+); Radio transmission and reception (3GPP TS 45.005 version 4.3.0 Release 4)

- Global Positioning System Standard Positioning Server (SPS) Performance Standard (October 2001), available at https://www.gps.gov /technical/ps/2001-SPS-performance-standard.pdf

- H. Nakano et al., "An Inverted FL Antenna for Dual-Frequency Operation," IEEE Transactions on Antennas and Propagation, vol. 53, no. 8, pp. 2417-2421, Aug. 2005 ("Nakano")

- IEEE Std. 802.11a-1999, Supplement to the IEEE Standard for Information Technology—Telecommunications and information exchange between systems—Local and metropolitan area networks—Specific requirements— Part 11: Wireless LAN Medium Access Control (MAC) and Physical Layer (PHY) specifications: High-speed Physical Layer in the 5 GHz Band (Dec. 30, 1999)

- IEEE Std. 802.11b-1999, Supplement to the IEEE Standard for Information Technology—Telecommunications and information exchange between systems—Local and metropolitan area networks—Specific requirements— Part 11: Wireless LAN Medium Access Control (MAC) and Physical Layer (PHY) specifications: Higher-Speed Physical Layer Extension in the 2.4 GHz Band (Jan. 20, 2000)

- ITU, Report ITU-R M.2134-0: Requirements related to technical performance for IMT-Advanced radio interface(s) (2008), available at https://www.itu.int/pub/R-REP-M.2134-2008/en (visited June 12, 2025)

- P. Ciais et al., "Compact internal multiband antenna for mobile phone and WLAN standards," Electronic Letters, Vol. 40, No. 15, pp. 920-921 (2004) ("Ciais Multiband")

- P. Ciais et al., "Design of an Internal Quad-Band Antenna for Mobile Phones," IEEE Microwave and Wireless Components Letters, Vol. 14, No. 4, pp. 148-150 (April 2004) ("Ciais Quad-Band")

- Second Report and Order, In re Service Rules for the 698-746, 747-762 and 777-792 MHz Bands (WT Docket No. 06-150)

- Specification of the Bluetooth System version 2.0, volume 2 (issued Nov. 4, 2004)

- Wi-Fi Alliance Press Release, "Wi-Fi Celebrates Its Third Birthday" (Apr. 7, 2003) (Wayback Machine copy dated Sep. 28, 2003)

- X. Jing et al., "Compact Planar Monopole Antenna for Multi-band Mobile Phones," 2005 Asia-Pacific Microwave Conference Proceedings, vol. 4, pp. 2657-2660, IEEE, 2005 ("Jing")

- Zigbee Standards Organization, "ZigBee Specification," Document 053474r06, Version 1.0 (Jun. 27, 2005)

- Application No. 11/614,429 ("the '429 application") ('200 Patent, code (63)), filed December 21, 2006, published January 24, 2008 (U.S. Patent Pub. No. 2008/018543) ("Baliarda-543")

2. Prior Art Products or Systems

The following products or systems constitute prior art to the '200 Patent under at least pre-AIA 35 U.S.C. §§ 102(a), (b) and/or (g)(2) and/or AIA 35 U.S.C. § 102(a) because they were known or used by others, in public use or on sale, otherwise available to the public, or invented by another in this country prior the '200 Patent's priority date, or in the case of pre-AIA § 102(b) more than a year before that date:

- HP Compaq nc6400

- Dell Latitude D820

- Blackberry 7290

- Cingular 8125 / HTC Wizard

- HP iPAQ hw6515

- Blackberry 7100t

- Blackberry 7130c

- Blackberry 7130e

- Sony Ericsson Z520a

- Motorola PEBL

- Motorola V360

- Lenovo T60

- Blackberry 8700

As reflected in the accompanying claim charts and exhibits, each of the ’200 Prior Art Products qualifies as prior art under § 102 because it was either: (1) known or used by others, in public use, on sale, or otherwise available to the public in the United States before the alleged priority date, or (2) reduced to practice in the United States before the alleged priority date without being abandoned, suppressed, or concealed. To the extent the ’200 Patent is not entitled to the alleged priority date but instead to later priority dates, each of the ’200 Prior Art Products qualifies under pre-AIA § 102 or AIA § 102 for the same reasons as to those later priority dates. To support the substantive disclosure and status is prior art for each of the ’200 Prior Art Products, Geotab reserves the right to rely on the following sources of evidence, including those sources expressly cited in the accompanying claim charts and exhibits:

- Samples, teardowns, diagrams, images, and the like, including any such materials Geotab or third parties have or will produce or make available for inspection;
- Documents relating to the prior art products, including any documents Geotab or third parties have produced or will produce;
- Testimony of Geotab’s or third parties’ employees and former employees;
- Fractus’s Infringement Contentions and expert reports and testimony in the current case or prior cases; and
- Geotab’s expert reports and testimony.

Geotab reserves the right to rely on other sources of evidence identified in discovery as Geotab’s investigation progresses.

C. Anticipation and Obviousness

Geotab attaches Exhibits E-01 through E-10, which provide exemplary disclosures showing how the prior art anticipates and/or renders obvious the ’200 Asserted Claims. The charts identify primary references, and, in some cases, secondary references, and anticipation and

Fractus Exhibit 2002
Resmed v. Fractus
Page 83 of 109

obviousness contentions. Geotab may rely on any of the primary references identified in Exhibits E-01 through E-10, in combination with any secondary reference identified in those exhibits, as well as in Section VI.B supra. Those exhibits also identify each such combination, and the motivation to combine such items with a reasonable expectation of success.

In addition, Geotab incorporates by reference the petitions, petitioner papers, and arguments in *Inter Partes* Review Nos. IPR2025-01027 (filed by Geotab June 6, 2025), IPR2024-00088 (Filed by Vivint, Inc. on October 24, 2023), as well as any future *Inter Partes* Reviews and *Ex Parte* Reexaminations, and all documents cited or referenced therein, which challenge the validity of the ’200 patent.

By way of particular example, and not limitation, the ’200 Asserted Claims would have been anticipated or obvious under pre-AIA §§102-103 based on each of the following references or combinations of references, as reflected and discussed in the accompanying claim charts:

- **Blackberry 7290 (addressed in Exhibit E-01)**
- **Dou, alone or in view of Jing (addressed in Exhibit E-02)**
- **Johnson (addressed in Exhibit E-03)**
- **Ramasamy (addressed in Exhibit E-04)**
- **Dell D820, alone or in view of Gaucher (addressed in Exhibit E-05)**
- **Blackberry 7290, alone or in view of the Cingular 8125/HTC Wizard, the Blackberry 7130e, Dou ’208 and/or the HP iPAQ hw6515 (addressed in Exhibit E-06)**[14]
- **INTENTIONALLY SKIPPED**
- **Blackberry 7130c, alone or in view of the Cingular 8125, Blackberry 7290, and/or Blackberry 7130e (addressed in Exhibit E-08)**

[14] Defendants reserve the right to additionally rely on the Blackberry 7100t device in combination with the Blackberry 7290.

- **Sony Ericsson Z520a, alone or in view of the Motorola V360 (addressed in Exhibit E-09)** [15]
- **Lenovo T60 (addressed in Exhibit E-10)**

1. Anticipation and Obviousness Based on Baliarda-543

The published parent case Baliarda-543 is AIA §102(a)(1) prior art to claims 1-20 because it published January 24, 2008, more than a year before the earliest possible April 7, 2014 effective-filing date. Baliarda-543, code (43). Because Baliarda-543's specification is materially identical to the '200 patent, it discloses species within each Challenged Claim even though it does not disclose the full scope of each claim to a broad genus. *See Chester v. Miller*, 906 F.2d 1574, 1577 (Fed. Cir. 1990) ("no impermissible anomaly or logical inconsistency" in treating a parent application as prior art that invalidates "broader claims" it did not adequately describe). To the extent the Court finds that Baliarda-543 does not expressly recite any claimed subject matter, it renders such claims obvious.

'200 claim limitation	Corresponding Disclosure in Baliarda-543
1[pre]	Abstract, [0002]
1[a]-[c]	Abstract, [0082]-[0084], [0097], [0103], [0152], [0212]-[0217]
1[d]	[0137], [0213]-[0215]
1[e]-[f]	[0032]-[0035], [0098]-[0100], [0117]-[0118], [0212]-[0215], [0265], [0300], [0324]-[0325], Figs. 12A, 19A
1[g]	*See* 1[e]-[f]; [0212]-[0215]
1[h]	[0141]-[0144]
1[i]-[j]	[0178], [0181]-[0183], [0213]
1[k]	[0213] and [0228]-[0231]

[15] Defendants reserve the right to additionally rely on the Motorola PEBL device in combination with the Sony Ericsson Z520a.

’200 claim limitation	Corresponding Disclosure in Baliarda-543
1[l]	*See* 1[e]-[f]; [0212]-[0215]
2	[0114]-[0116], [0133]-[0134], [0154]-[0162], [0213], [0226]-[0227], Fig. 1B
3	[0141]-[0144], [0149]-[0151], [0271]
4	*See* 1[e]-[f]
6[pre]	*See* 1[pre]
6[a]-[c]	*See* 1[a]-[c]
6[d]	*See* 1[e]-[g]
6[e]-[g]	*See* 1[e]-[f]
6[h]	*See* 1[h]
6[i]-[j]	*See* 1[i]-[j]
6[k]	*See* 1[k]-[l]
6[l]-[p]	*See* claim 2
6[q]	*See* 1[d] and 1[k]
7	[0141]-[0149], [0270], Fig. 12A
9	*See* claim 3
10	[0103], [0212]-[0215]
11[pre]	*See* 1[pre]
11[a]-[c]	*See* 1[a]
11[d]	*See* 1[e]-[g]
11[e]	*See* 1[h]
11[f]	*See* claim 7
11[g]-[h]	*See* 1[i]-[j]

’200 claim limitation	Corresponding Disclosure in Baliarda-543
11[i]-[m]	*See* claim 2
11[n]	*See* 1[l]
11[o]	*See* 1[k]
12	*See* 1[e]-[f]
13	*See* 1[e]-[f]
15	*See* claim 10
17	*See* claim 10
19	*See* claim 10

For Limitations 2, 6[l]-[p] and 11[i]-[m], Baliarda-543 at [0154]-[0162] says that the G2 grid and the G2 cell aspect ratio are determined based on the aspect ratio of the antenna rectangle. This describes a 9 column by (2n + 1) row G2 grid of cells—e.g., having an odd number (2n + 1) of rows where n is an integer between 0 and 5 (for 1 to 11 rows)—wherein the aspect ratio of the cells is as close to 1 as possible. Baliarda-543 therefore describes an antenna rectangle wherein the G2 grid has 9 columns by 1 row or 3 rows, with each cell as square as possible, which means that Baliarda-543 separately describes an antenna rectangle with an aspect ratio on the order of 9 or 3, e.g., more than 2 as recited in 2, 6[l]-[p] and 11[i]-[m].

D. Invalidity Under 35 U.S.C. § 112

1. Indefiniteness

a. “4G communication standard / communication standard(s)”

“4G communication standard / communication standard(s)” as recited in claims 1, 6, and 11 of the ’200 Patent is indefinite. The specification does not define or provide sufficient explanation for what is mean by the term “4G.” No 4G standard existed as of the filing date, and

at that time, the identification of possible 4G standards remained undefined and unlimited in scope. As a result, the term "4G communication standard / communication standard(s) " is indefinite for being unclear, vague, and ambiguous for failing to provide reasonable certainty concerning the scope of the claimed invention. The claims in which this term appears (whether directly or via dependency) are thus invalid.

b. " receive signals from a 4G communication standard"

"receive signals from a 4G communication standard " as recited in claim 1 of the '200 Patent is indefinite. This claim term does not appear anywhere in the specification of the '200 Patent. The plain text of the claim language requires the antenna receive signals from a standard. This is indefinite because a standard is not capable of transmitting signals. As a result, the term "receive signals from a 4G communication standard" is indefinite for being unclear, vague, and ambiguous for failing to provide reasonable certainty concerning the scope of the claimed invention. The claims in which this term appears (whether directly or via dependency) are thus invalid.

c. "complexity factor"

"complexity factor" as recited in claims 1, 6, and 11 of the '200 Patent is indefinite. The specification provides a POSA with multiple methods to derive the various numerical inputs when calculating a "complexity factor," which then result in materially different outcomes for the same antenna design. Specifically, the specification provides multiple methods for deriving the antenna contour and for selecting the number of columns and rows for the grid overlaid on top of the antenna contour which are required inputs to compute the "complexity factor." Namely, there are at least two ways of determining an antenna contour of an antenna: (1) the perimeter of the planar elements (and aperture) intersecting the antenna rectangle, and/or, (2) the orthogonal projection of the non-planar elements onto the rectangle. In addition, the

specification fails to teach the proper selection of the number of columns and rows for grid G_2. These differences can and do result in the same antenna either meeting or not meeting the claim limitation. As a result, the term "complexity factor" is indefinite for being unclear, vague, and ambiguous for failing to provide reasonable certainty concerning the scope of the claimed invention. The claims in which this term appears (whether directly or via dependency) are thus invalid.

d. "proximate"

"proximate" as recited in claims 1 and 11 of the '200 Patent is indefinite because it is a term of degree and the patent fails to provide sufficient guidance for determining its scope. When a claim uses a term of degree, the intrinsic record must provide "objective boundaries" sufficient to allow POSAs to discern the scope of the claim with "reasonable certainty." *Nautilus*, 572 at 901; *see also Berkheimer*, 881 F.3d at 1364.

Claim 1 is exemplary and recites, in part:

> 1. A wireless device comprising:
>
> an antenna system comprising a ground plane and at least two antennas within the wireless device, the antenna system comprising:;
>
> a first antenna **proximate** to a first short side of a ground plane rectangle enclosing the ground plane…;
>
> a second antenna **proximate** to a first long side of the ground plane rectangle….

Nothing in the claims or intrinsic record provide guidance regarding what degree of closeness does qualify, and what degree of closeness does not qualify, as "proximate." The word "proximate" does not appear anywhere in the specification of the '200 Patent. *See, e.g.*, '200 Patent at FIGS. 5A-5C, 14:48-66 ("the antenna system of the present invention advantageously places a feeding point of the antenna system, preferably a feeding point responsible for the operation of the antenna system in its lowest frequency band, in such a way that a contact

Fractus Exhibit 2002
Resmed v. Fractus
Page 89 of 109

terminal of the MFWD 100 is located near an edge of a ground plane encompassed by the ground plane rectangle."), 25:40-45 ("In some cases it would be advantageous to place the 4G antenna substantially close to the edge that is opposite to the shorter edge. In other cases it would be advantageous to place the 4G antenna substantially close to an edge that is adjacent to the shorter edge."), 29:9-19 ("For reasons of ergonomics, it is advantageous in the examples of FIG. 5 to select a corner of the antenna rectangle close to the left edge of the MFWD 500. The upper left corner of the antenna rectangle 505 is selected as the feeding point corner in the case of FIG. 5A, while the lower left corner of the antenna rectangle 506 is selected as the feeding point corner in the case of FIG. 5B. In these two examples the corners designated as feeding point corners 505, 506 are also substantially close to a short edge of a ground plane rectangle (not depicted in FIG. 5) that encloses the ground plane layer 502."), claim 11 (reciting similar limitation as claim 1).

For example, reviewing the depicted examples in the specification, given that "feeding corner 1211" is described as "**near** a corner of the ground plane rectangle" (33:56-64, FIG. 12B), "slot 1704" is described as having a "first end 1730 **near** the left side of the antenna rectangle" (40:1-10, FIG. 17D), and the "feeding point corners 505, 506 are also **substantially close** to a short edge of a ground plane rectangle (not depicted in FIG. 5)" (FIGS. 5A-5C, 29:9-19), it is not clear what distance is too far away to no longer fall within the scope of "proximate." *See Clear Imaging*, 2020 WL 6384731, at *20-*21. Indeed, the '200 Patent appears to treat "near" (FIGS. 12B, 17D) as different in scope from "substantially close" (FIGS. 5A-5C). However, given that "proximate" is not a term of art, and that the intrinsic records lacks any "objective boundaries" for a POSA to understand the degrees of closeness that do, and the degrees of closeness that do not, qualify as "proximate," the term is indefinite for failing to provide reasonable certainty

concerning the scope of the claimed invention. The claims in which this term appears (whether directly or via dependency) are thus invalid.

e. " close"

The term "close" as recited in claim 6 (and unasserted claim 8) of the '200 Patent is indefinite because it is a term of degree and the patent fails to provide sufficient guidance for determining its scope. When a claim uses a term of degree, the intrinsic record must provide "objective boundaries" sufficient to allow POSAs to discern the scope of the claim with "reasonable certainty." *Nautilus,* 572 U.S. at 901; *see also Berkheimer*, 881 F.3d at 1364.

Claim 6[16] recites, in part:

> 1. A wireless device comprising:
>
> an antenna system comprising a ground plane and at least two antennas within the wireless device, the antenna system comprising:
>
> a first antenna…;
>
> a second antenna…;
>
> … wherein at least one of the first and second antennas is **close** to a first short side of a ground plane rectangle enclosing the ground plane.
>
> * * * * * * *
>
> 8. The wireless device of claim 6, wherein at least one of the first and second antennas is **close** to a first long side of the ground plane rectangle.

Nothing in the claims or intrinsic record provide guidance regarding what degree of proximity does qualify, and what degree of proximity does not qualify, as "close" *See* '200 Patent at 25:39-45 ("Generally the longer side of the antenna rectangle is placed alongside a short edge of the ground plane rectangle. In some cases it would be advantageous to place the 4G antenna **substantially close** to the edge that is opposite to the shorter edge. In other cases it

[16] '200 Patent claim 8 (unasserted) is also reproduced below.

would be advantageous to place the 4G antenna **substantially close** to an edge that is adjacent to the shorter edge."), 29:9-19 ("For reasons of ergonomics, it is advantageous in the examples of FIG. 5 to select a corner of the antenna rectangle close to the left edge of the MFWD 500. The upper left corner of the antenna rectangle 505 is selected as the feeding point corner in the case of FIG. 5A, while the lower left corner of the antenna rectangle 506 is selected as the feeding point corner in the case of FIG. 5B. In these two examples the corners designated as feeding point corners 505, 506 are also **substantially close** to a short edge of a ground plane rectangle (not depicted in FIG. 5) that encloses the ground plane layer 502."). Indeed, these two passages in columns 25 and 29 are the only places in the '200 Patent specification that use the word "close" in connection with the location of the antennas and the ground plane rectangle, and even there do not refer to anything depicted in a figure. These two passages also do not use the unmodified word "close" in relation to the ground plane rectangle, but instead only the longer phrase "**substantially** close," which does not appear in the claims. A POSA is left entirely without guidance as to how "close" is close enough, or what difference (if any) there is between "close" as claimed and "substantially close" as mentioned in the specification.

And as discussed in connection with the term "proximate" immediately above, in reviewing the depicted examples in the specification, and given that "feeding corner 1211" is described as "**near** a corner of the ground plane rectangle" (33:56-64, FIG. 12B), "slot 1704" is described as having a "first end 1730 **near** the left side of the antenna rectangle" (40:1-10, FIG. 17D), and the "feeding point corners 505, 506 are also **substantially close** to a short edge of a ground plane rectangle (not depicted in FIG. 5)" (FIGS. 5A-5C, 29:9-19), it is not clear what distance is too far away to no longer fall within the scope of "close." *See Clear Imaging*, 2020 WL 6384731, at *20-*21. Indeed, the '200 Patent appears to treat "near" (FIGS. 12B, 17D) as

different in scope from "substantially close" (FIGS. 5A-5C). However, given that "close" is not a term of art, and that the intrinsic records lacks any "objective boundaries" for a POSA to understand the degrees of closeness that do, and the degrees of closeness that do not, qualify as "close," the term is indefinite for failing to provide reasonable certainty concerning the scope of the claimed invention. The claims in which this term appears (whether directly or via dependency) are thus invalid.

2. Lack of Written Description

The '200 Asserted Claims do not comply with the first paragraph of § 112 because the specification does not "contain a written description of the invention, and of the manner and process of making and using it, in such full, clear, concise, and exact terms as to enable any person skilled in the art to which it pertains, or with which it is most nearly connected, to make and use the same." In particular, the '200 Patent fails to provide adequate written description support for claims 1, 6, 11. As described above, the specification does not include reference to or adequate support for "4G communication standard / communication standard(s)," "receive signals from a 4G communication standard," "complexity factor," "proximate," and "close." Accordingly, the claims in which these terms appear (whether directly or via dependency) are invalid for lack of written description support in the specification..

VII. '149 PATENT

A. Priority Date

The Asserted Claims of the '149 Patent are not entitled to a priority date earlier than the '149 patent's actual filing date (i.e., June 22, 2023). Despite having the burden of proof, Fractus has offered no evidence that the '149 Patent is entitled to an earlier priority date. Defendants understand, however, that Fractus maintains in its Infringement Contentions that the Asserted Claims of the '149 Patent are entitled to an earlier priority date of June 19, 2006. While Fractus

has offered no evidence for that priority date, and Defendants do not agree with it, the relevant prior art discussed below pre-dates that earlier alleged priority date.

B. Relevant Prior Art

Defendants identify the following prior art known to Defendants to anticipate or render obvious the '149 Patent under at least pre-AIA 35 U.S.C. §§ 102(a), (b), (e), and/or (g), or AIA 35 U.S.C. § 102(a), either expressly or inherently as understood by a POSA, or based on Fractus's apparent interpretation of the claims.

1. Patents and Printed Publications

The following patents and patent application publications constitute prior art to the '149 Patent at least under pre-AIA 35 U.S.C. § 102(e) or AIA 35 U.S.C. § 102(a) because they are issued patents or patent applications that name another inventor and were effectively filed before either of June 22, 2023 or June 19, 2006. Some of these patents and publications are also prior art under pre-AIA §§ 102(a) and (b) because they issued or published before either of June 22, 2023 or June 19, 2006, including in some instances more than a year prior to those dates under § 102(b).

- U.S. Patent No. 6,166,694 ("Ying"), issued December 26, 2000, and filed July 9, 1998
- U.S. Patent No. 6,670,923 (Kadambi"), issued December 30, 2003, and filed July 24, 2002
- U.S. Patent No. 6,943,746 ("Talvitie"), issued September 13, 2005, and filed October 23, 2003
- U.S. Patent No. 7,023,387 ("Wen"), issued April 4, 2006, and filed May 13, 2004
- U.S. Patent No. 7,058,434 ("Wang434"), issued June 6, 2006, and filed November 18, 2003
- U.S. Patent No. 7,102,577 ("Richard"), issued September 5, 2006, and filed September 30, 2004

- U.S. Patent No. 7,109,924 ("Vance"), issued September 19, 2006, and filed May 18, 2004
- U.S. Patent No. 7,139,533 ("Katagishi"), issued November 21, 2006, and filed August 15, 2003
- U.S. Patent No. 7,142,824 ("Kojima"), issued November 28, 2006, and filed August 28, 2003
- U.S. Patent No. 7,205,942 ("Wang"), issued April 17, 2007, and filed July 6, 2005
- U.S. Patent No. 7,298,339 ("Ollikainen339"), issued November 20, 2007, and filed June 27, 2006
- U.S. Patent No. 7,432,860 ("Huynh"), issued October 7, 2008, and filed May 17, 2006
- U.S. Patent No. 7,683,839 ("Ollikainen839"), issued March 23, 2010, and filed June 30, 2006
- U.S. Patent No. 7,724,194 ("Black"), issued May 25, 2010, and filed June 30, 2006
- U.S. Patent No. 7,801,556 ("Tran"), issued September 21, 2010, and filed August 26, 2005
- U.S. Patent Application Publication No. 2002/0094789 A1 ("Harano"), published July 18, 2002, and filed January 14, 2002
- U.S. Patent Application Publication No. 2003/0025635 A1 ("Hilgers"), published February 6, 2003, and filed July 30, 2002
- U.S. Patent Application Publication No. 2003/0214446 A1 ("Shehab"), published November 20, 2003, and filed May 14, 2002
- U.S. Patent Application Publication No. 2004/0001021 A1 ("Choo"), published January 1, 2004, and filed December 16, 2002
- U.S. Patent Application Publication No. 2004/0051669 A1 ("Rutfors"), published March 18, 2004, and filed July 10, 2001
- U.S. Patent Application Publication No. 2004/0125016 A1 ("Atwood"), published July 1, 2004, and filed December 27, 2002
- U.S. Patent Application Publication No. 2004/0145528 A1 ("Mukai"), published July 29, 2004, and filed November 25, 2003

- U.S. Patent Application Publication No. 2006/0082503 A1 ("Gaucher"), published April 20, 2006, and filed October 18, 2004
- U.S. Patent Application Publication No. 2006/0181468 A1 ("Iguchi"), published August 17, 2006, and filed February 14, 2006
- U.S. Patent Application Publication No. 2006/0238433 A1 ("Chou"), published October 26, 2006, and filed March 1, 2005
- U.S. Patent Application Publication No. 2006/0290575 A1 ("Pelzer"), published December 28, 2006, and filed April 29, 2004
- U.S. Patent Application Publication No. 2007/0200773 A1 ("Dou"), published August 30, 2007, and filed February 24, 2006
- Chinese Patent No. CN2765337Y ("Wei"), issued March 15, 2006, and filed February 6, 2005
- Chinese Patent Publication No. CN1452271A, published October 29, 2003, and filed April 19, 2002
- Chinese Patent Publication No. CN1728455A, published February 1, 2006, and filed July 1, 2005
- Chinese Patent Publication No. CN1729593A, published February 1, 2006, and filed October 28, 2003
- European Patent Publication No. EP1471596A1 ("Ying EP"), published October 27, 2004, and filed April 26, 2003
- International PCT Publication No. WO 2004/042868 A1 ("Castany868"), published May 21, 2004, and filed November 7, 2002
- International PCT Publication No. WO 2005/076409 A1 ("Castanny409"), published August 18, 2005, and filed January 28, 2005
- International PCT Publication No. WO 2006/002849 A1 ("Rozan"), published January 12, 2006, and filed June 27, 2005
- Japanese Patent Publication No. JP2005347958 (A) ("Shuichi"), published December 15, 2005, and filed June 1, 2004
- H. Nakano et al., "An Inverted FL Antenna for Dual-Frequency Operation," IEEE Transactions on Antennas and Propagation, vol. 53, no. 8, pp. 2417-2421, Aug. 2005 ("Nakano")

- M.K.A. Rahim et al., "Microstrip Sierpinski carpet antenna using transmission line feeding," 2005 Asia-Pacific Microwave Conference Proceedings, Suzhou, China, 2005, pp. 4 pp.-, doi: 10.1109/APMC.2005.1606382

- M.Z. Azad & M. Ali, "A New Class of Miniature Embedded Inverted-F Antennas (IFAs) for 2.4 GHz WLAN Application," IEEE Transactions on Antennas and Propagation, vol. 54, no. 9, pp. 2585-2592, Sept. 2006, doi: 10.1109/TAP.2006.880710

- N. Sala, "Fractal models in architecture: A case of study," Proceedings International Conference on Mathematics for Living, pp. 266-272, November 2000

- P. Ciais et al., "Compact internal multiband antenna for mobile phone and WLAN standards," Electronic Letters, Vol. 40, No. 15, pp. 920-921 (2004) ("Ciais-Multiband")

- P. Ciais et al., "Design of an Internal Quad-Band Antenna for Mobile Phones," IEEE Microwave and Wireless Components Letters, Vol. 14, No. 4, pp. 148-150 (April 2004) ("Ciais Quad-Band")

- X. Jing et al., "Compact Planar Monopole Antenna for Multi-band Mobile Phones," 2005 Asia-Pacific Microwave Conference Proceedings, vol. 4, pp. 2657-2660, IEEE, 2005 ("Jing")

2. Prior Art Products or Systems

The following products or systems constitute prior art to the '149 Patent under at least pre-AIA 35 U.S.C. §§ 102(a), (b) and/or (g)(2) and/or AIA 35 U.S.C. § 102(a) because they were known or used by others, in public use or on sale, otherwise available to the public, or invented by another in this country prior the '149 Patent's priority date, or in the case of pre-AIA § 102(b) more than a year before that date:

- HP Compaq nc6400

- Dell Latitude D820

- Lenovo T60

As reflected in the accompanying claim charts and exhibits, each of the '149 Prior Art Products qualifies as prior art under § 102 because it was either: (1) known or used by others, in public use, on sale, or otherwise available to the public in the United States before the alleged

priority date, or (2) reduced to practice in the United States before the alleged priority date without being abandoned, suppressed, or concealed. To the extent the '149 Patent is not entitled to the alleged priority date but instead to later priority dates, each of the '149 Prior Art Products qualifies under pre-AIA § 102 or AIA § 102 for the same reasons as to those later priority dates. To support the substantive disclosure and status is prior art for each of the '149 Prior Art Products, Defendants reserve the right to rely on the following sources of evidence, including those sources expressly cited in the accompanying claim charts and exhibits:

- Samples, teardowns, diagrams, images, and the like, including any such materials Defendants or third parties have or will produce or make available for inspection;
- Documents relating to the prior art products, including any documents Defendants or third parties have produced or will produce;
- Testimony of Defendants' or third parties' employees and former employees;
- Fractus's Infringement Contentions and expert reports and testimony in the current case or prior cases; and Defendants' expert reports and testimony.

Defendants reserve the right to rely on other sources of evidence identified as discovery and Defendants' investigation progresses.

C. Anticipation and Obviousness

Defendants attach Exhibits F-01 through F-10, which provide exemplary disclosures showing how the prior art anticipates and/or renders obvious the '149 Asserted Claims. The charts identify primary references, and, in some cases, secondary references, and anticipation and obviousness contentions. Defendants may rely on any of the primary references identified in Exhibits F-01 through F-10, in combination with any secondary reference identified in those exhibits, as well as in Section VII.B supra. Those exhibits also identify each such combination, and the motivation to combine such items with a reasonable expectation of success.

In addition, Defendants incorporate by reference the petitions, petitioner papers, and arguments in Post-Grant Review No. PGR2025-00056 (filed by Geotab June 17, 2025), as well as in any future *Inter Partes* Reviews and *Ex Parte* Reexaminations, and all documents cited or referenced therein, which challenge the validity of the ’149 patent.

By way of particular example, and not limitation, the ’149 Asserted Claims would have been anticipated or obvious under pre-AIA §§102-103 based on each of the following references or combinations of references, as reflected and discussed in the accompanying claim charts:

- **Dou (addressed in Exhibit F-01)**
- **Wei (addressed in Exhibit F-02)**
- **Castany868 (addressed in Exhibit F-03)**
- **Talvitie (addressed in Exhibit F-04)**
- **HP Compaq nc6400, alone or in view of Gaucher (addressed in Exhibit F-05)**
- **Dou in view of Ciais Multiband and/or Nakano (addressed in Exhibit F-06)**
- **Dou in view of Ciais Quad-Band and/or Hilgers (addressed in Exhibit F-07)**
- **Dou in view of Jing and/or Ying (addressed in Exhibit F-08)**
- **Dell D820, alone or in view of Gaucher (addressed in Exhibit F-09)**
- **Lenovo T60 (addressed in Exhibit F-10)**

D. Invalidity Under 35 U.S.C. § 112

1. Indefiniteness

a. “complexity factor”

“complexity factor” as recited in claims 1, 5, 7, 9, 13, and 17 of the ’149 Patent is indefinite. The specification provides a POST with multiple methods to derive the various numerical inputs when calculating a “complexity factor,” which then result in materially different outcomes for the same antenna design. Specifically, the specification provides multiple

Fractus Exhibit 2002
Resmed v. Fractus
Page 99 of 109

methods for deriving the antenna contour which is a required input to compute the "complexity factor." Namely, a POSA could either derive the antenna contour from [1] the perimeter of the planar elements (and apertures) and/or [2a] the orthogonal projection of the non-planar elements, or [1] the perimeter of the planar elements (and apertures) and/or [2b] the external perimeter of the non-planar elements. These differences can and do result in the same antenna either meeting or not meeting the claim limitation. As a result, the term "complexity factor" is indefinite for being unclear, vague, and ambiguous for failing to provide reasonable certainty concerning the scope of the claimed invention. The claims in which this term appears (whether directly or via dependency) are thus invalid.

b. "wherein the level of complexity of the first contour is configured to provide operation of the wireless device in the at least three frequency bands"

"wherein the level of complexity of the first contour is configured to provide operation of the wireless device in the at least three frequency bands" as recited in claims 1, 7, and 13 of the '149 Patent is indefinite. This claim term does not appear anywhere in the specification of the '149 Patent. Like "complexity factor" above, the specification provides a POSA with multiple methods to derive the various numerical inputs when calculating a "level of complexity," which then result in materially different outcomes for the same antenna design. A POSA could either derive the antenna contour from [1] the perimeter of the planar elements (and apertures) and/or [2a] the orthogonal projection of the non-planar elements, or [1] the perimeter of the planar elements (and apertures) and/or [2b] the external perimeter of the non-planar elements. These differences can and do result in the same antenna either meeting or not meeting the claim limitation. There is also simply no disclosure how to determine the "level of complexity of the first contour" of an antenna, nor of how such a contour would be "configured" to provide operation of a wireless device in "at least three frequency bands." Nor would a POSA

understand the meaning of this phrase from the specification or what "levels of complexity" or shapes of a "contour" would be configured to provide such operation. As a result, the term "wherein the level of complexity of the first contour is configured to provide operation of the wireless device in the at least three frequency bands" is indefinite for being unclear, vague, and ambiguous for failing to provide reasonable certainty concerning the scope of the claimed invention. The claims in which this term appears (whether directly or via dependency) are thus invalid.

c. "proximate"

"proximate" as recited in claims 1, 7, and 13 of the '149 Patent is indefinite because it is a term of degree and the patent fails to provide sufficient guidance for determining its scope. When a claim uses a term of degree, the intrinsic record must provide "objective boundaries" sufficient to allow POSAs to discern the scope of the claim with "reasonable certainty." *Nautilus*, 572 at 901; *see also Berkheimer*, 881 F.3d at 1364.

Claim 13 is exemplary and recites, in part:

13. A wireless device comprising:

a ground plane;

a first antenna **proximate** to a first side of a ground plane rectangle enclosing the ground plane,…;

a second antenna **proximate** to a second side of the ground plane rectangle….

Nothing in the claims or intrinsic record provide guidance regarding what degree of closeness does qualify, and what degree of closeness does not qualify, as "proximate." The word "proximate" does not appear anywhere in the specification of the '149 Patent. *See, e.g.*, '149 Patent at FIGS. 5A-5C, 14:48-66 ("the antenna system of the present invention advantageously places a feeding point of the antenna system, preferably a feeding point responsible for the

operation of the antenna system in its lowest frequency band, in such a way that a contact terminal of the MFWD 100 is located near an edge of a ground plane encompassed by the ground plane rectangle."), 25:40-45 ("In some cases it would be advantageous to place the 4G antenna substantially close to the edge that is opposite to the shorter edge. In other cases it would be advantageous to place the 4G antenna substantially close to an edge that is adjacent to the shorter edge."), 29:9-19 ("For reasons of ergonomics, it is advantageous in the examples of FIG. 5 to select a corner of the antenna rectangle close to the left edge of the MFWD 500. The upper left corner of the antenna rectangle 505 is selected as the feeding point corner in the case of FIG. 5A, while the lower left corner of the antenna rectangle 506 is selected as the feeding point corner in the case of FIG. 5B. In these two examples the corners designated as feeding point corners 505, 506 are also substantially close to a short edge of a ground plane rectangle (not depicted in FIG. 5) that encloses the ground plane layer 502."), claims 1 and 7 (reciting similar limitation as claim 13).

For example, reviewing the depicted examples in the specification, given that "feeding corner 1211" is described as "**near** a corner of the ground plane rectangle" (33:56-64, FIG. 12B), "slot 1704" is described as having a "first end 1730 **near** the left side of the antenna rectangle" (39:56-63, FIG. 17D), and the "feeding point corners 505, 506 are also **substantially close** to a short edge of a ground plane rectangle (not depicted in FIG. 5)" (FIGS. 5A-5C, 29:9-19), it is not clear what distance is too far away to no longer fall within the scope of "proximate." *See Clear Imaging*, 2020 WL 6384731, at *20-*21. Indeed, the '200 Patent appears to treat "near" (FIGS. 12B, 17D) as different in scope from "substantially close" (FIGS. 5A-5C). However, given that "proximate" is not a term of art, and that the intrinsic records lacks any "objective boundaries" for a POSA to understand the degrees of closeness that do, and the degrees of closeness that do

not, qualify as "proximate," the term is indefinite for failing to provide reasonable certainty concerning the scope of the claimed invention. The claims in which this term appears (whether directly or via dependency) are thus invalid.

2. Lack of Written Description

The '149 Asserted Claims do not comply with the first paragraph of § 112 because the specification does not "contain a written description of the invention, and of the manner and process of making and using it, in such full, clear, concise, and exact terms as to enable any person skilled in the art to which it pertains, or with which it is most nearly connected, to make and use the same." In particular, the '149 Patent fails to provide adequate written description support for claims 1, 5, 7, 9, 13, and 17. As described above, the specification does not include reference to or adequate support for "complexity factor," "wherein the level of complexity of the first contour is configured to provide operation of the wireless device in the at least three frequency bands," and "proximate." Accordingly, the claims in which this term appears (whether directly or via dependency) are invalid for lack of written description support in the specification.

VIII. SECONDARY CONSIDERATIONS OF NON-OBVIOUSNESS

The Patent Local Rules do not require contentions as to alleged secondary considerations of non-obviousness under P.R. 3-3 and 3-4. That is unsurprising, as patent owners bear the burden of production on this issue, not accused infringers. *See ZUP, LLC v. Nash Mfg. Inc.*, 896 F. 3d 1365, 1373 (Fed. Cir. 2018). But Defendants briefly address the issue here in the interest of additional disclosure. Defendants also reserve the right to address these issues as fact and expert discovery continues and to supplement their contentions to respond to any such arguments or evidence should Fractus raise them in the future.

Defendants contend there are no secondary considerations of non-obviousness evidencing the validity of any of the Asserted Claims. Secondary considerations of non-obviousness, also referred to as objective indicia of non-obviousness, "can include copying, long felt but unsolved need, failure of others, commercial success, unexpected results created by the claimed invention, unexpected properties of the claimed invention, licenses showing industry respect for the invention, awards or other industry praise for the invention, and skepticism of skilled artisans before the invention." *Power Integrations, Inc. v. Fairchild Semiconductor Int'l, Inc*., 711 F.3d 1348, 1368 (Fed. Cir. 2013). "A nexus between the merits of the claimed invention and evidence of secondary considerations is required in order for the evidence to be given substantial weight in an obviousness decision." *Ruiz v. A.B. Chance Co*., 234 F.3d 654, 668 (Fed. Cir. 2000). Moreover, even if a nexus exists, secondary considerations of non-obviousness "simply cannot overcome [a] strong *prima facie* showing of obviousness." *Sundance, Inc. v. DeMonte Fabricating Ltd.*, 550 F.3d 1356, 1368 (Fed. Cir. 2008).

Fractus's only disclosure in this litigation so far that could relate to alleged secondary considerations of non-obviousness is its identification of various settlement and license agreements in its Initial and Additional Disclosures on Aprile 16, 2025, though Fractus makes no connection to secondary considerations in this list and has not yet produced these agreements. There is also no evidence that the cited licenses are tied to any specific patent or invention. Nor is there evidence that the cited licenses reflect a respect for the alleged inventions of the Asserted Patents as opposed to a desire to avoid litigation. *See, e.g*., *ClassCo, Inc. v. Apple, Inc*., 838 F.3d 1214, 1222 (Fed. Cir. 2016) (noting "insufficient evidence to prove that Philips was motivated to take the license because of merits of the claimed invention"). Indeed, it is often "cheaper to take

licenses than to defend infringement suits." *Iron Grip Barbell Co. v. USA Sports, Inc*., 392 F.3d 1317, 1324 (Fed. Cir. 2004) (internal citation and quotation omitted).

Fractus may suggest in the litigation that other secondary considerations include alleged commercial success, unresolved long-felt need, failures of other technologies and approaches, improved and new unexpected results, and recognition by others in the industry by licensing of the patent technology. But as to any such alleged considerations, Fractus has not even attempted to cite any evidence or reason to believe they are at issue in this case, despite the fact that "a patentee bears the burden of production with respect to evidence of secondary considerations of non-obviousness." *ZUP,* 896 F. 3d at 1373. Fractus has not even tried to meet that burden.

To the extent Fractus asserts commercial success, Fractus has not identified any evidence in support. To the extent Fractus asserts an unresolved long-felt need and failures of other technologies and approaches, it cites nothing in support. In contrast, the prior art identified and discussed herein and in the accompanying exhibits disclose all the elements of the Asserted Claims. *See, e.g., Geo M. Martin Co. v. Alliance Machine Sys. Int'l LLC*, 618 F.3d 1294, 1304-05 (Fed. Cir. 2010) (no long-felt but unsolved need where the identified need "had been meet by [the] prior art"). To the extent Fractus may cite purported improved and new unexpected results, the prior art identified and discussed herein and in the accompanying exhibits confirm that a POSA would have been well aware of the benefits of each and every element of the claimed inventions.

Fractus may also point to Defendants' products as a source of secondary consideration of non-obviousness. To the extent Fractus may cite its infringement contentions as purported evidence of copying, such theories would contradict controlling law that "[n]ot every competing product that arguably falls within the scope of a patent is evidence of copying. Otherwise every

infringement suit would automatically confirm the non-obviousness of the patent." *Iron Grip Barbell*, 392 F.3d at 1325. Instead, copying requires "evidence of efforts to replicate a specific product." *Tokai*, 632 F.3d at 1370. And as with other secondary considerations, there must be "a nexus between the [alleged] copying and the novel aspects of the claimed invention." *Wm. Wrigley Jr.*, 683 F.3d at 1362. No such nexus exists here, nor has Fractus pointed to any evidence of a nexus, or even alleged one.

IX. PATENT RULE 3-4 DOCUMENT PRODUCTION

Under Eastern District of Texas Patent Rule 3-4 and the Amended Docket Control Order (Dkt. No. 40), Defendants are producing or making available for inspection, or have already produced and made available for inspection: (1) prior art under P.R. 3-4(b) (produced at DEFS-FRACTUS_0000001 - DEFS-FRACTUS_0010489), and (2) technical documentation regarding the Accused Instrumentalities under P.R.3-4(a), to the extent such documentation is in Defendants' possession, custody, or control (produced at VZ-FRAC_0000001 - VZ-FRAC_0004974 and GEO-FRACTUS-0005577-5985).

Fractus Exhibit 2002
Resmed v. Fractus
Page 106 of 109

Date: June 18, 2025

/s/ Hunter D. Keeton (w/permission)
Melissa R. Smith
State Bar No. 24001351
melissa@gillamsmithlaw.com
GILLAM & SMITH, LLP
303 South Washington Avenue
Marshall, Texas 75670
Telephone: (903) 934-8450
Facsimile: (903) 934-9257

Michael A. Albert (Lead counsel)
malbert@wolfgreenfield.com
Hunter D. Keeton
hkeeton@wolfgreenfield.com
WOLF, GREENFIELD & SACKS, P.C.
600 Atlantic Avenue
Boston, MA 02210
Phone 617.646.8000
Fax 617.646.8646

Attorneys for Defendant Geotab Inc.

/s/ Christopher J. Tyson
Holly Engelmann
State Bar No. 24040865
DUANE MORRIS LLP
Terrance 7
2801 Via Fortuna, Suite 200
Austin, Texas 78746
Tel: (512) 277-2246
Fax: (512) 597-2301
HEngelmann@duanemorris.com

Deron R. Dacus
State Bar No. 00790553
THE DACUS FIRM, P.C.
821 ESE Loop 323, Suite 430
Tyler, Texas 75701
Tel: (903) 705-1117
Fax: (903) 705-1117
ddacus@dacusfirm.com

Kevin P. Anderson
District of Columbia Bar No. 476504
Christopher J. Tyson
Virginia Bar No. 81553
DUANE MORRIS LLP
901 New York Avenue N.W., Suite 700 East
Washington, DC 20001-4795
Tel: (202) 776-7800
Fax: (202) 776-7801
kpanderson@duanemorris.com
cjtyson@duanemorris.com

Jayla C. Grant
GA State Bar No. 312669
DUANE MORRIS LLP
1075 Peachtree Street NE, Suite 1700
Atlanta, GA 30309
Tel: (404) 253-6915
Fax: (404) 253-6901
JCGrant@duanemorris.com

Attorneys for Defendants Verizon Connect Inc. and Cellco Partnership d/b/a Verizon Wireless

Fractus Exhibit 2002
Resmed v. Fractus
Page 108 of 109

CERTIFICATE OF SERVICE

The undersigned hereby certifies that on June 18, 2025, true and correct copies of this document and all attachments and exhibits were served upon all counsel of record via electronic mail and ftp download, per the agreement of counsel.

/s/ Christopher J. Tyson
Christopher J. Tyson