UNITED STATES PATENT AND TRADEMARK OFFICE

BEFORE THE PATENT TRIAL AND APPEAL BOARD

RESMED CORP.,
Petitioners,
v.

FRACTUS, S.A.,
Patent Owner.

Case No. IPR2026-00191
Patent No. 11,031,677

EXPERT DECLARATION OF HOSSEIN HASHEMI, Ph.D.

I, Hossein Hashemi, Ph.D., do hereby declare as follows:

I. Introduction

1. I am a Professor of Electrical Engineering at the University of Southern California ("USC"). I am, however, currently on a leave of absence and temporarily working as a full-time employee at Astera Labs, Inc.

2. I have been retained by Edell, Shapiro and Finnan, LLC (hereinafter "the Edell Firm"), to provide various opinions regarding U.S. Patent No. 11,031,677 ("the '677 Patent"). I understand that my declaration is being submitted in connection with a Patent Owner Preliminary Response in an inter partes review of the '677 Patent. Unless otherwise noted, the statements made herein are based on my personal knowledge and, if called to testify with regards to this declaration, I could and would do so competently and truthfully.

3. I have been retained in this matter by the Edell Firm as a technical expert in the field of electrical engineering, particularly within the context of antenna design and operation in multifunction wireless devices. I am being compensated for my work in this matter at my usual and customary rate of $760.00 per hour. I have no personal or financial stake or interest in the outcome of the inter partes review or any related action. My compensation in no way depends upon my testimony or the outcome of the inter partes review.

4. I have been advised that the Edell Firm represents Fractus, S.A. (hereinafter "Patent Owner") in this matter and that Geotab Inc. and Geotab USA, Inc. (hereinafter "Petitioners") have petitioned for inter partes review of the '677 Patent. I have no personal or financial stake or interest in Patent Owner, Petitioners, or the '677 Patent.

5. I reserve the right to supplement and/or amend my opinions in this declaration based on future positions taken by Petitioners or their experts, additional documents, testimony or other information provided by Petitioners or their witnesses, any actions from the Patent Trial and Appeal Board ("Board"), or as otherwise necessary.

II. Qualifications

6. My qualifications for forming the opinions set forth in this expert report are summarized here and explained in more detail in my *curriculum vitae* which is attached as Exhibit A to this Declaration. Exhibit A includes a full list of my publications and other professional contributions and achievements, and a list of the cases in which I have testified at deposition, hearing, or trial.

7. I am currently the Ming Hsieh Electro-Physics Professor of Electrical and Computer Engineering, and a Co-Director of the Ming Hsieh Institute at USC. I received my Bachelor of Science degree in Electronics Engineering from Sharif University of Technology in 1997. I received my Master's degree in Electronics

Engineering from Sharif University of Technology in 1999. I received my Master's degree and Ph.D. in Electrical Engineering from the California Institute of Technology in 2001 and 2003, respectively.

8. From 1997 to 1999 I was a radiofrequency integrated circuit design engineer at Keresem Communications Research. I became an Assistant Professor of Electrical Engineering at USC in October 2003 and remained in that position until May 2009. From November 2007 to May 2009, I also occupied the Gordon S. Marshall Early Career Chair at USC. In May 2009 I became a tenured Associate Professor of Electrical Engineering at USC and remained in that position until my promotion to Professor in December 2014, a title I have held since then.

9. I have over 25 years of industry and academic experience. In particular, I have experience with antennas and electromagnetic technologies including designing, simulating, taping out, and measuring complex electromagnetic structures spanning frequency ranges of 100 MHz – 170 GHz, as well as infrared frequencies (1550nm wavelength), and demonstrating numerous phased arrays (multi-antenna systems) spanning radiofrequency to infrared frequencies.

10. I have been privileged to receive a number of awards and honors throughout my career. These include:

- Fellow, Optica 2023
- Fellow, Institute of Electrical and Electronics Engineers (IEEE) - 2019

- Winner, Nokia Bell Labs Prize - 2016
- Outstanding Young Engineer Award of the IEEE Microwave Theory and Techniques Society (MTT-S) - 2015
- Distinguished Lecturer, IEEE Solid State Circuits Society 2013 – 2014
- Distinguished Scholar for "Outstanding Achievement in Advancement of Engineering," Association of Professors and Scholars of Iranian Heritage -2011
- Inaugural Winner, Maseeh Entrepreneurship Prize Competition, USC - 2011
- NSF CAREER Award - 2009
- USC Viterbi School of Engineering Junior Faculty Research Award - 2008
- DARPA Young Faculty Award - 2008
- Lewis Winner Award for Outstanding Paper, IEEE International Solid-State Circuits Symposium (ISSCC) - 2007
- Best Paper Award, IEEE Journal of Solid-State Circuits - 2004
- Charles Lee Powell Foundation Research Award - 2004
- Young Scholar Award, Association of Professors and Scholars of Iranian Heritage - 2003
- Graduate Fellowship Award, Intel Foundation - 2002
- Outstanding Student Designer Award, Analog Devices - 2001
- Outstanding Accomplishment Award, von Brimer foundation - 2000
- Engineering and Applied Science Division Fellowship, California Institute of Technology - 1999

- Ranked first in Ph.D. EE qualifying exam, California Institute of Technology - 2000
- Ninth place out of 300,000 in national qualifying exam for undergraduate studies – 1993

11. I have co-authored two books and over 125 peer-reviewed journal and conference papers. I have also spoken at numerous invited workshops, talks and short courses. Many of these relate directly or indirectly to antennas, antenna arrays and various modes of wireless communication and electronics design.

12. I am the named inventor on 15 United States Patents, including patents related to antenna technology, including U.S. Patent Nos. 10,615,949 (Hybrid-based cancellation in presence of antenna mismatch) and 8,203,484 (Path-sharing transceiver architecture for antenna arrays).

III. Legal Standards

13. While I am not an attorney, I have been informed by counsel of certain legal principles I should apply in reaching my opinions in this matter. Also, as an inventor, expert witness and otherwise in the course of my work, I have experience studying and analyzing patents and patent claims from the perspective of a person of ordinary skill in the art (POSITA or "skilled artisan").

A. Claim Construction

14. I understand that claim terms are to be interpreted from the point of view of a POSITA at the time of the invention. I further understand that claim terms are generally to be given their ordinary meaning, considered in light of the claim language, patent specification, and prosecution history. I further understand that a patentee may act as its own lexicographer and depart from the ordinary and customary meaning by defining a term with reasonable clarity, deliberateness, and precision, but that there is a presumption that a claim term carries its ordinary and customary meaning.

B. Person of Ordinary Skill in the Art

15. I understand that a person of ordinary skill in the art is a hypothetical person who is presumed to have known the relevant art at the time of the invention. He or she is a person of ordinary creativity who understands the scientific and engineering principles applicable to the pertinent art. I am familiar with the knowledge and capabilities of one of ordinary skill in the art in the field of the '677 Patent at the time of invention.

16. I understand that whether a patent claim would have been obvious is determined from the point of view of a person of ordinary skill in the art at the time of the invention. I have applied this standard in my analysis.

C. Validity

17. I understand that for an *inter partes* review to be instituted, Petitioners must show that there is a reasonable likelihood that they will prevail with respect to at least one of the claimed challenged in the petition. I understand that Petitioners bear the burden of proving any instituted grounds of invalidity by a preponderance of the evidence. I understand that a "preponderance" means "more likely than not." I understand that general and conclusory assertions, without underlying factual evidence, may not support a conclusion that something is "more likely than not." Rather, the preponderance of the evidence standard requires that a reasonable finder of fact be convinced that the existence of a specific material fact is more probable than the non-existence of that fact. The preponderance of the evidence standard does not support speculation regarding specific facts and is instead focused on whether the evidence more likely than not demonstrates the existence or non-existence of specific material facts. Here, I understand that Petitioners have argued that the claims at issue are obvious over different grounds, two grounds applying a combination of

two or more references, and third ground based on a parent application to the '677 Patent.

18. I also understand that, in performing a proper invalidity analysis, an expert must do more than simply provide quotes from the evidentiary record along with conclusory allegations of unpatentability. To the contrary, an expert's conclusions regarding unpatentability must be supported by actual analysis and reasoning set forth in the expert declaration, such that the theoretical and factual foundation for the expert's conclusions can be properly evaluated.

19. I understand that a patent claim may be found unpatentable as obvious under 35 U.S.C. § 103 only if the Board establishes by a preponderance of the evidence that, as of the priority date, the subject matter of the claim, considered as a whole, would have been obvious to a person having ordinary skill in the field of the technology (the "art") to which the claimed subject matter belongs.

20. I understand that the analysis of whether a claim is obvious depends on a number of necessary factual inquiries, for example, (1) the scope and content of the prior art; (2) the differences between the claimed subject matter and the prior art; (3) the level of ordinary skill in the art; and (4) objective evidence of non-obviousness.

21. I understand that the claimed invention must be considered as a whole in analyzing obviousness or non-obviousness. In determining the differences between the prior art and the claimed invention, the question under the obviousness inquiry is not whether the differences themselves would have been obvious, but whether the claimed invention as a whole would have been obvious. Relatedly, I understand that it may be appropriate to consider whether there is evidence of a "teaching, suggestion, or motivation" to combine the prior art teachings in the prior art, the nature of the problem to be solved, or the knowledge of a person having ordinary skill in the art. I further understand arguments in support of obviousness cannot be sustained by mere conclusory statements; instead, there must be some articulated reasoning with some rational underpinning to support the legal conclusion of obviousness.

22. I understand that one indicator of non-obviousness is when prior art "teaches away" from combining certain known elements. For example, a prior art reference teaches away from the patent's particular invention if it leads in a different direction or discourages a combination with another reference, recommends steps that would not likely lead to the patent's result, or otherwise indicates that a seemingly inoperative device would be produced.

23. I understand that an obviousness determination also requires that a person of ordinary skill in the art would have had a reasonable expectation of success in making any modifications to the cited references.

24. I further understand that certain objective indicia (sometimes called "secondary considerations") can be important evidence regarding whether a patent is nonobvious, including the existence of a long-felt but unsolved need, unexpected results, commercial success, copying, and industry acceptance or praise. Evidence of such objective indicia must be considered when present. It is generally an error to reach a conclusion on obviousness before considering the evidence of such secondary considerations, and then evaluating the latter solely in terms of whether it may fill any gaps in the initial conclusion on obviousness. On the other hand, such evidence is not a requirement for patentability, and the absence of such evidence is a neutral factor in the obviousness analysis.

25. I understand that the obviousness analysis cannot be based on "hindsight." The skilled artisan must view prior art at the time of the invention and without using the disclosure of the subject patent as a guide.

26. To the extent Petitioners argue a prior art reference anticipates the claimed invention of the '677 Patent, a prior art reference must be enabled to

anticipate a patent. That is, I understand that the prior art reference's description must be such that a person of ordinary skill in the field of the invention can practice the subject matter based on the reference without undue experimentation.

IV. Materials Reviewed

27. In forming the opinions offered in this Declaration I reviewed and considered as appropriate the following materials: the '677 Patent and its prosecution history, the Petition, the Expert Declaration of Daniel van der Weide Ph.D. (Ex. 1007), and the remaining exhibits to the Petition and any additional materials cited herein.

V. Background

A. Person of Ordinary Skill in the Art

28. I understand that Petitioners have relied upon the following definition of a POSITA utilized by Fractus in prior litigation involving the '677 Patent:

> [A] person with at least a bachelor's degree in electrical engineering, computer science, or a similar degree and at least four years of experience in applied electromagnetics with an emphasis on antennas. Alternatively, the person of ordinary skill in the art would have a master's degree in electrical engineering (or similar discipline) and at least two years of similar experience.

Petition, 11, *citing* Ex. 1018, 8-9 at ¶32, Ex. 1007 at ¶39.

29. For the purpose of forming my opinions as set forth in this Declaration, I have applied this definition of a POSITA.

B. Overview of the '677 Patent

30. The '677 Patent is entitled "Multiple-Body-Configuration Multimedia and Smartphone Multifunction Wireless Devices," and issued on June 8, 2021. EX1001. I understand the '677 Patent issued from United States Patent Application No. 16/832,820, filed on March 27, 2020, which is a continuation of U.S. Patent Application No. 15/856,626, filed on December 28, 2017 (now U.S. Patent No. 10,644,380), which is a continuation of Application No. 14/738,090, filed June 12, 2015 (now U.S. Patent No. 9,899,727), which is a continuation of Application No. 14/246,491, filed April 7, 2014 (now U.S. Patent No. 9,099,773), which is a continuation of Application No. 11/614,429, filed December 21, 2006 (now U.S. Patent No. 8,738,103), which claims priority from Provisional Application No. 60/856,410, filed November 3, 2006 and Provisional Application No. 60/831,544, filed July 18, 2006.

31. The aforementioned priority Application No. 11/614,429 was also published as U.S. Patent Publication No. 2008/0018543 on January 24, 2008,

identified in the Petition as Baliarda-543. The subject matter disclosed in the '677 Patent is that same as that disclosed in its priority application Baliarda-543, *i.e.*, no continuation-in-part applications exist in the priority chain, and no new subject matter was ever added at any point in the priority chain.

32. The '677 Patent describes a wireless device having a multiband antenna system with two or more antennas, at least one of which has a complex shape which can be characterized by a set of complexity factors that relate to different structural and functional features of the antenna. By overlaying different-sized grids on a contour of an antenna and evaluating the number of cells within the grid spanned by the contour, attributes of the antenna's complexity can be determined. For example, a complexity factor F_{21}, determined from the cell counts from grids with large-sized and medium-sized cells, characterizes the complexity and degree of convolution of features of the antenna contour that appear when the contour is viewed at relatively coarser levels of scale. EX1001 at 19:15-18. Consequently, complexity factor F_{21} tends to increase with the number of antenna portions within the structure of the antenna system, typically associated with more frequency bands or radiation modes. *Id*. at 19:37-49. A complexity factor F_{32}, determined from the cell counts from grids with medium-sized and small-sized cells, characterizes the complexity and degree

of convolution of features of the antenna contour that appear when the contour is viewed at relatively finer levels of scale. *Id*. at 20:5-9. Consequently, complexity factor F_{32} tends to increase when the antenna contour includes a highly convoluted curve and reveals the degree of miniaturization achieved by the antenna system. *Id*. at 20:16-27. Evaluating an antenna using such complexity factors reveals its suitability for specific applications. *See, e.g.*, *Id*. at 21:23-26:53.

33. The claims of the '677 Patent recite wireless devices including antenna systems with at least two antennas and which include antenna structures that meet specific complexity factor requirements in distinctive combinations with particular frequency bands that are supported by the antenna systems.

C. Claim Construction

34. I have reviewed and understand Petitioners' claim construction arguments (Petition, 13-31), and do not necessarily agree with them. Any differences I have with Petitioners' claim constructions, however, are not directly pertinent to any of the opinions that I am offering in this Declaration and, accordingly, are not addressed. I reserve, however, the right to disagree with Petitioners' claim constructions and to provide different and additional opinions on claim construction if an IPR is instituted.

D. Technical Background – Antenna Spatial Diversity

35. Spatial diversity is a technique in wireless communications that uses multiple antennas to improve signal reliability and performance by mitigating the effects of multipath fading and other interference. Multipath fading occurs when a wireless signal propagates along multiple different paths of differing lengths because of interactions with obstacles, resulting in portions of the signal energy arriving at a receiver with different phases slightly offset in time. The phase-shifted versions of the signal may result in constructive or destructive interference with each other. Such interference is spatially dependent – it varies from one spot to another based on the relative phases of the phase-shifted versions of the signal at different locations. Two locations separated by a small fraction of the wavelength of the wireless signal tend to experience similar fading and interference characteristics. Consequently, two closely spaced two antennas cannot provide effective spatial diversity. Conversely, by providing sufficient spacing between two antennas, the likelihood increases that at least one of the antennas will be positioned at a location where the multipath or other interference is relatively low, thereby improving overall signal quality and reliability. As I teach my students, a commonly accepted rule of thumb is that at least a quarter-wavelength spacing between antennas is necessary to provide effective

spatial diversity. In some contexts, a larger distance such as a half-wavelength spacing or more may be preferable.

E. Overview of the Cited Art

1. Dou

36. U.S. Patent Application No. 11/361,860 to Dou et al., entitled "Internal Diversity Antenna Architecture" ("Dou" or EX1013), was filed on February 24, 2006, and was published as U.S. Patent Publication No. 2007/0200773 on August 30, 2007. Dou is generally directed to an antenna architecture that includes first and second antennas located near opposite ends of a printed circuit board (PCB) such that the spacing between two antennas provides spatial diversity. Fig. 2A of Dou shows an internal diversity antenna structure comprising first and second internal antennas 206, 208 on a PCB 204 within a wireless device 200. The first internal antenna 206 is positioned near the top edge of the PCB 204, and the second internal antenna 208 is positioned near the bottom edge of the PCB 204. EX1013 at ¶ [0017]. Dou explains that:

> first internal antenna 206 and the second internal antenna 208 may be used **to implement various spatial diversity techniques** to improve

> communication of wireless signals across one or more frequency bands of wireless shared media.

EX1013 at ¶ [0022] (emphasis added). *See also,* EX1013 at ¶¶ [0032], [0036].

37. Consistent with generally accepted spacing requirements to achieve spatial diversity, Dou specifies the following spacing dimensions:

> In the embodiment shown in FIG. 2A, for example, the length (L) of the wireless device 200 may be greater than 0.3 wavelength (>0.3λ) of the lowest frequency, **and the first internal antenna 206 and the second internal antenna 208 may be separated by a distance (D) that is no less than the quarter wavelength (>=λ/4) of the lowest frequency**.

EX1013 at ¶ [0024] (emphasis added).

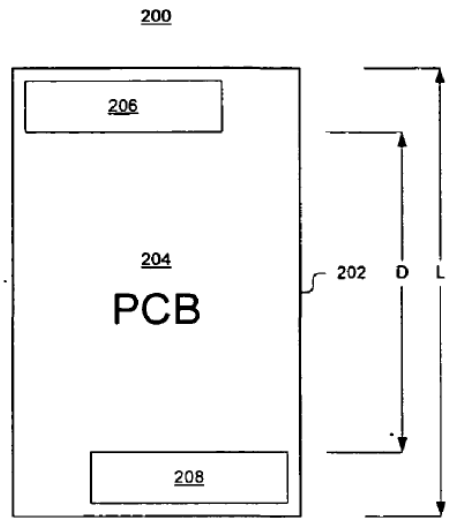

FIG. 2A

38. Dou emphasizes the importance of the quarter-wavelength spacing between the two antennas by reciting this limitation in the claims themselves:

> 8. The wireless device of claim 2, said first diversity antenna and said second diversity antenna **separated by a distance greater than or equal to a quarter wavelength of a lowest operating frequency of said wireless device**.

EX1013 at Claim 8 (emphasis added).

39. The wavelength λ corresponding to a frequency of 870 MHz, for example, is 344.8 mm. At this wavelength, the length *L* of Dou's PCB 204, which is specified to be >0.3λ, must be greater than 103.45 mm, and the spacing *D* between

the first and second antennas 206, 208, which is specified to be $\geq\lambda/4$, must be at least 86.2 mm.

2. Ciais-Quadband

40. Pascal Ciais et al., "Design of an Internal Quad-Band Antenna for Mobile Phones," *IEEE Microwave and Wireless Components Letters,* vol. 14, no. 4, pp.148-150, April 2004 ("Ciais-Quadband" or EX1009) discloses a planar inverted-F antenna (PIFA) suitable for cellular telephone applications. In the sole embodiment described by Ciais-Quadband and shown in Figs. 1A and 1B, the antenna is located at a short end of a PCB ground plane and consists of a main patch with a slot, three quarter-wavelength parasitic elements, and capacitive loads that create additional resonances at four different frequencies. EX1009 at 148.

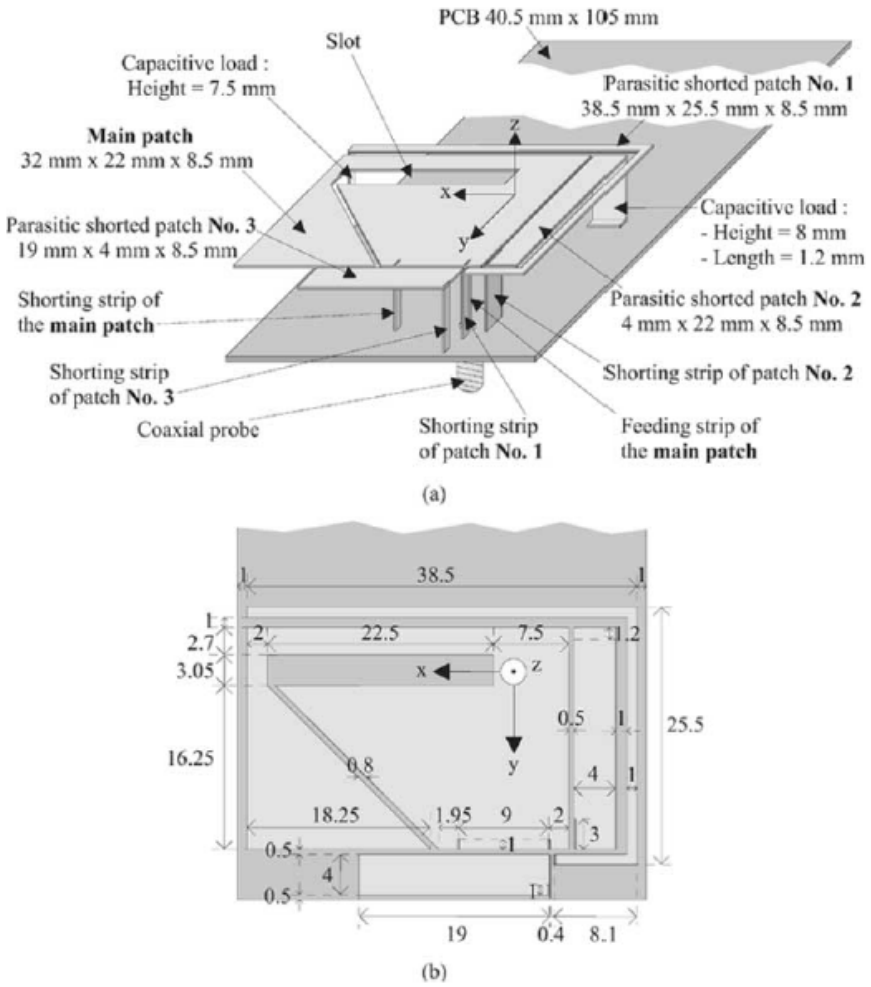

41. As shown in Figs. 1A and 1B, the overall dimensions of Ciais-Quadband's antenna are 38.5 mm x 28.5 mm with a height (spacing from the PCB) of 8.5 mm. The antenna has clearances of 0.5 mm from the end (short) edge of the PCB and 1.0 mm from each of the side (long) edges of the PCB. The PCB dimensions are 40.5 mm x 105.0 mm. EX1009 at 148-149. Ciais-Quadband

identifies the lowest band of the antenna as 870-960 MHz, i.e., 870 MHz is the lowest frequency of the Ciais-Quadband antenna. EX1009 at 149.

42. Because Ciais-Quadband does not attempt to provide antenna diversity, Ciais-Quadband includes only a single quad-band antenna located at one of the short ends of the PCB. Ciais-Quadband, consequently, does not contend with the issue of a suitable spacing between two such antennas to provide spatial diversity.

3. Nakano

43. H. Nakano et al. "An Inverted FL Antenna for Dual-Frequency Operation," *IEEE Transactions on Antennas and Propagation*, vol. 53, no. 8, pp. 2417-2421, Aug. 2005 ("Nakano" or EX1012) describes an inverted FL antenna (InvFLA) designed to obtain dual-frequency operation for the wireless LAN frequencies of 2.45 GHz and 5.2 GHz. EX1012 at 2417. Nakano's antenna is made of a thin, flat conducting film implemented in a card-type structure in which the antenna is co-planar with a ground plane and extends from a long side of the ground plane. EX1012 at 2417-2418. The ground plane dimensions are 30 mm x 25.5 mm, and the antenna dimensions are 30 mm x 5.5 mm. EX1012 at 2418-2420. As shown in Fig. 1(b) of Nakano, the antenna includes three sub-elements: an inverted L element, an inverted F element, and a parasitic inverted L element. EX1012 at 2418.

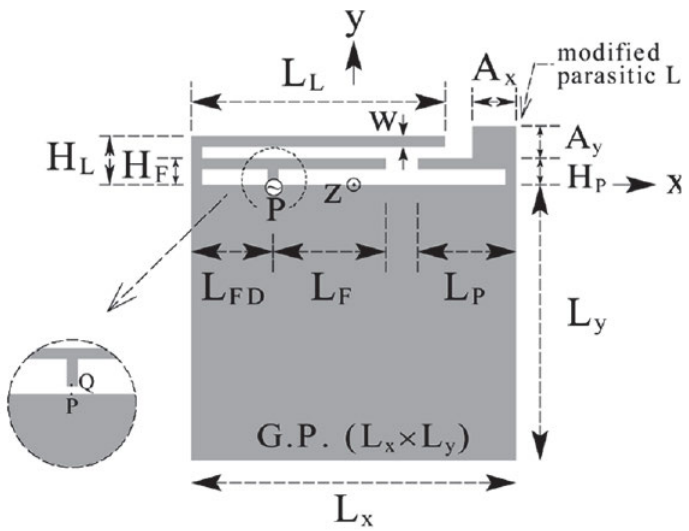

(b)

4. Baliarda-543

44. U.S. Pre-Grant Publication No. 2008/0018543 to Baliarda et al. ("Baliarda-543") is the pre-grant publication of U.S. Application No. 11/614,429 (the "'429 Application"). It is my understanding that Baliarda-543 is a "parent" application to the '677 Patent and, based on my review, Baliarda-543 has a disclosure that is materially identical to that of the '677 Patent.

VI. Ground 1 – A Person of Ordinary Skill in the Art would not Combine Dou and Ciais-Quadband in Order to Obtain the Claimed Inventions

45. The Petition alleges that claims 1-9 would have been obvious to a POSITA at the time of invention based on the combined teachings Dou and Ciais-Quadband. The proposed combination of Dou with Ciais-Quadband provided in the Petition is directly contrary to the teachings of Dou. Therefore, it is my opinion that

the combination would not have been obvious and a POSITA would not have had a reasonable expectation of success in implementing the combination.

46. As I discuss above, an objective of Dou's antenna design is to achieve spatial diversity between two antennas. EX1013 at ¶¶ [0017], [0022], [0023]. The combination of Dou and Ciais-Quadband proposed in the Petition constructs an antenna that violates the explicit design constraints specified by Dou – design constraints that are well known in the art as being necessary to achieve the spatial diversity Dou's antenna design seeks. Because the Petition modifies Dou's antenna in a way that is contrary to Dou's design constraints, it is my opinion that the proposed combination would not have been obvious.

47. Dou's diversity antenna includes two antennas 206 and 208 located at opposite ends of a PCB 204 for the purpose of achieving spatial diversity. EX1013 at ¶ [0017]. The Petition proposes to implement Dou's antenna system by replacing Dou's first antennas 206 with a first copy of Ciais-Quadband's quad-band antenna and by replacing Dou's second antenna 208 with a second copy of Ciais-Quadband's quad-band antenna. Petition at 35. Despite the Petition showing many augmented diagrams throughout and carefully identifying the dimensions of the proposed combination, the Petition provides no diagram showing the structure resulting from

the proposed combination of Dou and Ciais-Quadband. Nor does the Petition include any discussion of whether Dou's antenna arrangement – modified by substituting two copies of Ciais-Quadband's antenna – satisfies Dou's specification of having at least a quarter-wavelength spacing between the two antennas to provide spatial diversity, an objective of Dou's antenna design.

48. The Petition relies on the embodiment shown in Figs. 2A and 2B of Dou, replacing each of antennas 206 and 208 with a copy of Ciais-Quadband's antenna. Dou specifies that the first and second antennas 206 and 208 be "separated by a distance (D) that is no less than the quarter wavelength (>=λ/4) of the lowest frequency." EX1013 at ¶ [0024]. The lowest frequency of Ciais-Quadband's antenna is 870 MHz. EX1009 at 149. The wavelength λ corresponding to a frequency of 870 MHz is 344.8 mm, and a quarter of this wavelength – the minimum spacing specified by Dou to achieve spatial diversity at this wavelength – is 86.2 mm.

49. In the proposed combination of Dou and Ciais-Quadband, the Petition "uses Dou's ground plane 210" (Petition at 37), but implements it using the 40.5 mm x 105 mm dimensions from Ciais-Quadband because it is "representative of the Printed Circuit Board (PCB) of a typical mobile phone." EX1009 at 148; Petition at 45-46. The Petition further asserts that the antenna rectangle of the Ciais-Quadband

antenna is 38.5 x 28.5 mm. EX1009 at 149; Petition at 49. Factoring in the Ciais-Quadband antenna's clearances of 0.5 mm from the end edge of the PCB (EX1009 at 148), the recipe for combining Dou and Ciais-Quadband prescribed by the Petition results in the following structure:

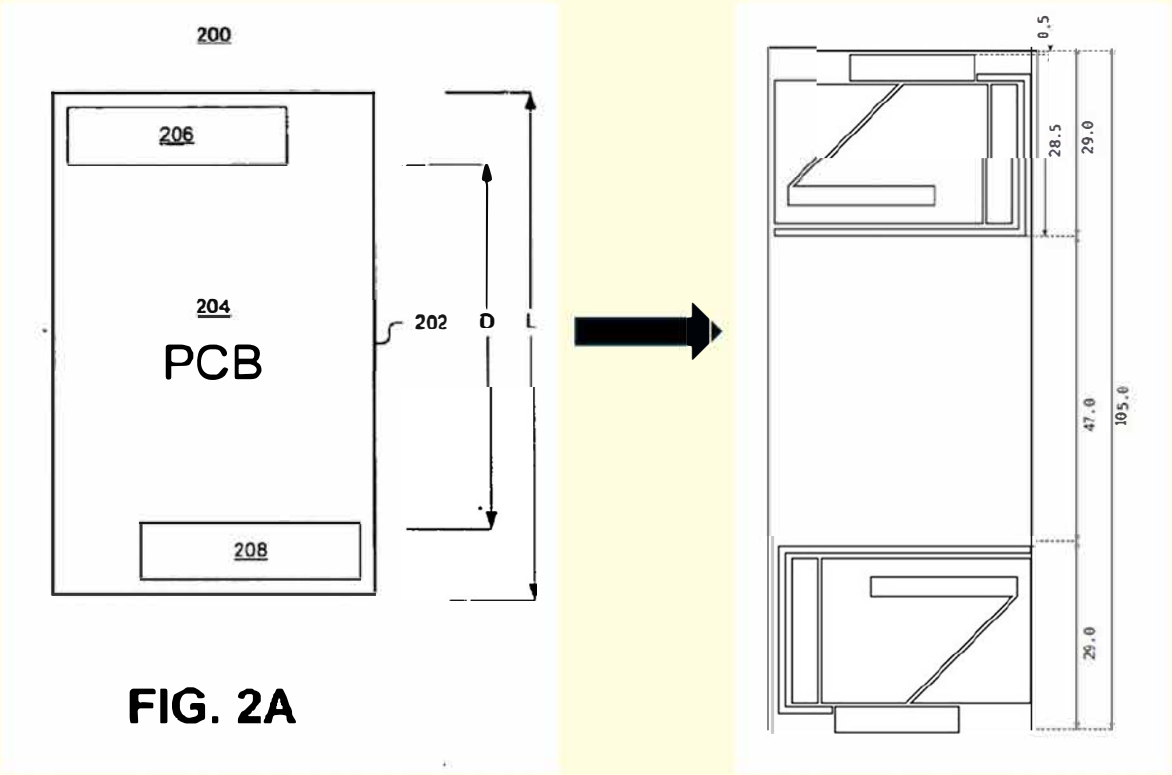

50. Subtracting the 29 mm required for the antennas at each end of the PCB from the 105 mm overall length of the PCB results in a spacing between the two antennas of 47.0 mm. This distance is barely more than half of the quarter-wavelength lower bound (86.2 mm) of the spacing specified by Dou to achieve spatial diversity at the antennas' lowest frequency (870 MHz). Such a spacing

between antennas is contrary to the express teachings of Dou and would have eliminated effective spatial diversity, a feature Dou's antenna architecture seeks to provide. The proposed modification, therefore, would not, in my opinion, have been obvious to the POSITA at the time of invention of the '677 Patent.

VII. Ground 2 – A Person of Ordinary Skill in the Art would not Combine Dou, Ciais-Quadband and Nakano in Order to Obtain the Claimed Inventions

51. The Petition alleges in Ground 2 that claims 1-20 would have been obvious to a POSITA at the time of invention based on the combined teachings Dou, Ciais-Quadband, and Nakano. Because Nakano does nothing to remedy the deficiencies of the combination of Dou and Ciais-Quadband proposed in Ground 1 of the Petition, it is my opinion that a POSITA would not have combined Dou, Ciais-Quadband, and Nakano for substantially the same reasons explained in Section VI., *supra*.

52. The Petition proposes adding Nakano's inverted FL (InvFL) antenna "alongside" the Dou+Ciais-Quadband combination of Ground 1 to cover wireless LAN frequencies. Petition at 69-70. In the proposed arrangement, Nakano's antenna extends off the bottom end of the Dou+Ciais-Quadband PCB.

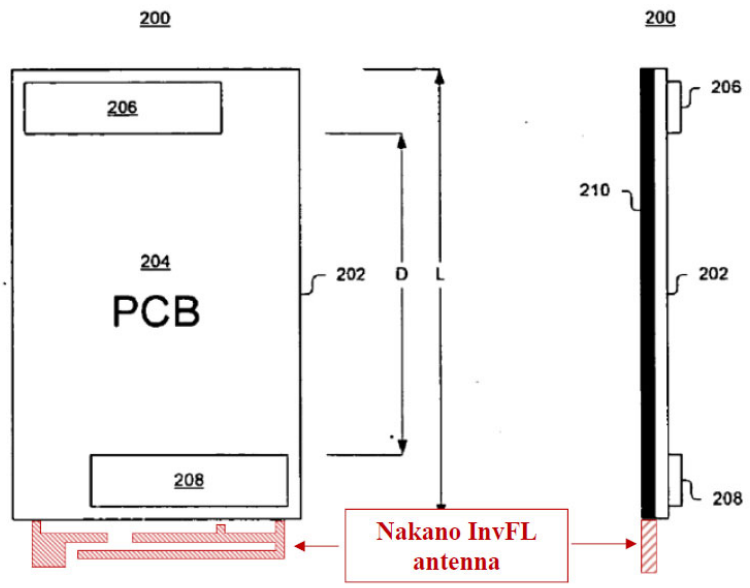

Id. at 71.

53. Regarding independent claims 1 and 6, the Petition does not further rely on Nakano in Ground 2, merely referring back to the arguments from Ground 1 and noting that Nakano's InvFL antenna replaces Dou's WiFi/Bluetooth antenna. That is, Ground 2 still proposed to replace Dou's two antennas 206 and 208 with duplicate copies of the Ciais-Quadband antenna. Petition at 72. Likewise, for independent claim 12, Ground 2 relies on this same proposed combination. Petition at 79-83. Consequently, the proposed addition of Nakano's antenna does nothing to address the non-obviousness of replacing Dou's antennas with two copies of Ciais-Quadband's antenna, as discussed Section VI., *supra*. The proposed combination of Dou+Ciais-Quadband+Nakano still destroys the spatial diversity Dou sought to

achieve between antenna 206 and 208, because the spacing between the swapped-in Ciais-Quadband antennas is barely half that specified by Dou.

VIII. Ground 3

54. It is my understanding that the Petition also proposes a second invalidity ground based on Baliarda-543. It is also my understanding that this ground is faulty due to a legal issue, mainly that Baliarda-543 is not prior art to the '677 Patent. As a technical expert, and not a legal one, I am refraining from offering an opinion on this ground at this time.

I declare under penalty of perjury that the foregoing is true and correct.

Date: 10/01/2025 By: _____
Hossein Hashemi, Ph.D.