THE UNITED STATES DISTRICT COURT
FOR THE EASTERN DISTRICT OF TEXAS
MARSHALL DIVISION

FRACTUS, S.A., *Plaintiff*, v. VERIZON CONNECT INC. *and* CELLCO PARTNERSHIP D/B/A VERIZON WIRELESS, *Defendants*.	§ § § § § § § § §	CASE NO. 2:24-CV-01009-JRG-RSP (Lead Case)

CLAIM CONSTRUCTION ORDER

On March 11, 2026, the Court held a hearing to determine the proper construction of disputed terms in United States Patents No. 8,456,365, 8,472,908, 8,810,458, 11,031,677, 11,349,200, and 12,095,149.

Before the Court are the Opening Claim Construction Brief (Dkt. No. 75) filed by Plaintiff Fractus, S.A. ("Plaintiff" or "Fractus"), the Responsive Claim Construction Brief (Dkt. No. 77) filed by Defendants Verizon Connect Inc., Cellco Partnership d/b/a Verizon Wireless (collectively, "Verizon"), and Geotab Inc. ("Defendant" or "Geotab"), and Plaintiff's reply (Dkt. No. 86). Also before the Court is the parties' February 17, 2026 Amended P.R. 4-3(a) Joint Claim Construction and Prehearing Statement (Dkt. No. 84) and the parties' February 24, 2026 Joint Claim Construction Chart (Dkt. No. 88).

Having reviewed the arguments made by the parties at the hearing and in their claim construction briefing, having considered the intrinsic evidence, and having made subsidiary factual findings about the extrinsic evidence, the Court hereby issues this Claim Construction Order. *See Phillips v. AWH Corp.*, 415 F.3d 1303, 1314 (Fed. Cir. 2005) (*en banc*); *Teva Pharm. USA, Inc. v. Sandoz, Inc.*, 135 S. Ct. 831, 841 (2015).

Table of Contents

I. BACKGROUND **2**
II. LEGAL PRINCIPLES **4**
III. AGREED TERMS **8**
IV. DISPUTED TERMS **8**
A. "antenna extends in a direction" 8
B. "operating wavelength" 9
C. "4G communications standard(s)" 14
D. "planar antenna," "antenna is planar," and "non-planar antenna" 18
E. "complexity factor" 20
F. "close" 33
V. CONCLUSION **33**
APPENDIX A **34**

I. BACKGROUND

Plaintiff alleges infringement of United States Patents No. 8,456,365 ("the '365 Patent"), 8,472,908 ("the '908 Patent"), 8,810,458 ("the '458 Patent"), 11,031,677 ("the '677 Patent"), 11,349,200 ("the '200 Patent"), and 12,095,149 ("the '149 Patent").

The '365 Patent, titled "Multi-Band Monopole Antennas for Mobile Communications Devices," issued on June 4, 2013, and bears an earliest priority date of December 22, 2002. The Abstract of the '365 Patent states:

> Antennas for use in mobile communication devices are disclosed. The antennas disclosed can include a substrate with a base, a top, a front side and a back side; a first conductor can be located on the first side of the antenna substrate; and a second conductor can be located on the second side of the antenna substrate. The conductors can have single or multiple branches. If a conductor is a single branch it can, for example, be a spiral conductor or a conducting plate. If a conductor has multiple branches, each branch can be set up to receive a different frequency band. A conductor with multiple branches can have a linear branch and a space-filling or grid dimension branch. A conducting plate can act as a parasitic reflector plane to tune or partially tune the resonant frequency of another conductor. The first and second conductors can be electrically connected.

The ’908 Patent, titled “Wireless Portable Device Including Internal Broadcast Receiver,” issued on June 25, 2013, and bears an earliest priority date of April 3, 2006. The Abstract of the ’908 Patent states:

> The invention relates, inter alia, to a wireless portable device for radio communication, comprising at least one antenna element (1210), at least one ground-plane (1250), radio frequency communication circuitry (1310) and at least one matching network (1320). The device is arranged for communication involving, at least, receiving and processing a signal in accordance with a communication system having a bandwidth with a lower frequency limit (f_{min}) and an upper frequency limit (f_{max}). The antenna element is a non-resonant antenna element for frequencies from said lower frequency limit (f_{min}) up to said higher frequency limit (f_{min}). Another aspect of the invention involves two antenna elements (2001, 2002) tuned around two different central frequencies within a frequency band, and a switch (2003) for selectively operatively connecting one of said at least two antenna elements to a radio frequency communication circuitry (2000).

The ’458 Patent, titled “Handheld Device With Two Antennas, and Method of Enhancing the Isolation Between the Antennas,” issued on August 19, 2014, and bears an earliest priority date of July 25, 2005. The Abstract of the ’458 Patent states:

> The invention relates to a handheld device comprising a first antenna (401, 701, 901, 931, 961, 1101, 1151, 1301, 1501) arranged to operate in at least a first frequency band, and a second antenna (402, 702, 902, 1102, 1302, 1502, 2210) arranged to operate in at least a second frequency band, wherein said second frequency band is different from said first frequency band. According to the invention, the second antenna comprises a slot antenna comprising at least one slot in at least one conductive layer. The invention also relates to enhancement of the isolation between first and second antennas in a handheld device.

The ’677 Patent, titled “Multiple-Body-Configuration Multimedia and Smartphone Multifunction Wireless Devices,” issued on June 8, 2021, and bears an earliest priority date of July 18, 2006. The Abstract of the ’677 Patent states:

> A multifunction wireless device having at least one of multimedia functionality and smartphone functionality, the multifunction wireless device including an upper body and a lower body, the upper body and the lower body being adapted to move relative to each other in at least one of a clamshell, a slide, and a twist manner. The multifunction wireless device further includes an antenna system disposed within

> at least one of the upper body and the lower body and having a shape with a level of complexity of an antenna contour defined by complexity factors F_{21} having a value of at least 1.05 and not greater than 1.80 and F 32 [*sic*, F_{32}] having a value of at least 1.10 and not greater than 1.90.

The ’200 Patent and the ’149 Patent resulted from continuations of the ’677 Patent.

The Court previously construed disputed terms in the ’365 Patent and the ’200 Patent in *Fractus, S.A. v. ADT d/b/a ADT Security Services*, No. 2:22-CV-412, Dkt. No. 115 (E.D. Tex. Feb. 26, 2024) (Payne, J.) (“*ADT*”).

Plaintiff submits that the specifications of the ’677 Patent, the ’200 Patent, and the ’149 Patent are substantially identical. *See, e.g.,* Dkt. No. 86 at 4 n.3.

Plaintiff asserts the ’908 Patent against only Verizon. Dkt. No. 73, Ex. A at 14. Prior to the March 11, 2026 hearing, the parties notified the Court of a settlement agreement reached between Plaintiff and Verizon. Dkt. No. 91. The parties also notified the Court that because the ’908 Patent had been asserted against only Verizon, the term “matching network” is no longer presented for construction. Dkt. No. 92. Further, the parties notified the Court that Geotab does not assert indefiniteness as to “substantially close” or “proximate” and therefore those terms are no longer presented for construction. *Id.*

As for the remaining terms, shortly before the start of the March 11, 2026 hearing the Court provided the parties with preliminary constructions with the aim of focusing the parties’ arguments and facilitating discussion. Those preliminary constructions are noted below within the discussion for each term.

II. LEGAL PRINCIPLES

“It is a ‘bedrock principle’ of patent law that ‘the claims of a patent define the invention to which the patentee is entitled the right to exclude.’” *Phillips*, 415 F.3d at 1312 (quoting *Innova/Pure Water Inc. v. Safari Water Filtration Sys., Inc.*, 381 F.3d 1111, 1115 (Fed. Cir. 2004)).

Claim construction is clearly an issue of law for the court to decide. *Markman v. Westview Instruments, Inc.*, 52 F.3d 967, 970–71 (Fed. Cir. 1995) (*en banc*), *aff'd*, 517 U.S. 370 (1996). "In some cases, however, the district court will need to look beyond the patent's intrinsic evidence and to consult extrinsic evidence in order to understand, for example, the background science or the meaning of a term in the relevant art during the relevant time period." *Teva*, 135 S. Ct. at 841 (citation omitted). "In cases where those subsidiary facts are in dispute, courts will need to make subsidiary factual findings about that extrinsic evidence. These are the 'evidentiary underpinnings' of claim construction that we discussed in *Markman*, and this subsidiary factfinding must be reviewed for clear error on appeal." *Id.* (citing 517 U.S. 370).

To determine the meaning of the claims, courts start by considering the intrinsic evidence. *See Phillips*, 415 F.3d at 1313; *see also C.R. Bard, Inc. v. U.S. Surgical Corp.*, 388 F.3d 858, 861 (Fed. Cir. 2004); *Bell Atl. Network Servs., Inc. v. Covad Commc'ns Group, Inc.*, 262 F.3d 1258, 1267 (Fed. Cir. 2001). The intrinsic evidence includes the claims themselves, the specification, and the prosecution history. *See Phillips*, 415 F.3d at 1314; *C.R. Bard*, 388 F.3d at 861. Courts give claim terms their ordinary and accustomed meaning as understood by one of ordinary skill in the art at the time of the invention in the context of the entire patent. *Phillips*, 415 F.3d at 1312–13; *accord Alloc, Inc. v. Int'l Trade Comm'n*, 342 F.3d 1361, 1368 (Fed. Cir. 2003).

The claims themselves provide substantial guidance in determining the meaning of particular claim terms. *Phillips*, 415 F.3d at 1314. First, a term's context in the asserted claim can be very instructive. *Id.* Other asserted or unasserted claims can aid in determining the claim's meaning because claim terms are typically used consistently throughout the patent. *Id.* Differences among the claim terms can also assist in understanding a term's meaning. *Id.* For

example, when a dependent claim adds a limitation to an independent claim, it is presumed that the independent claim does not include the limitation. *Id.* at 1314–15.

"[C]laims 'must be read in view of the specification, of which they are a part.'" *Id.* at 1315 (quoting *Markman*, 52 F.3d at 979). "[T]he specification 'is always highly relevant to the claim construction analysis. Usually, it is dispositive; it is the single best guide to the meaning of a disputed term.'" *Phillips*, 415 F.3d at 1315 (quoting *Vitronics Corp. v. Conceptronic, Inc.*, 90 F.3d 1576, 1582 (Fed. Cir. 1996)); *accord Teleflex, Inc. v. Ficosa N. Am. Corp.*, 299 F.3d 1313, 1325 (Fed. Cir. 2002). This is true because a patentee may define his own terms, give a claim term a different meaning than the term would otherwise possess, or disclaim or disavow the claim scope. *Phillips*, 415 F.3d at 1316. In these situations, the inventor's lexicography governs. *Id.* The specification may also resolve the meaning of ambiguous claim terms "where the ordinary and accustomed meaning of the words used in the claims lack sufficient clarity to permit the scope of the claim to be ascertained from the words alone." *Teleflex*, 299 F.3d at 1325. But, "[a]lthough the specification may aid the court in interpreting the meaning of disputed claim language, particular embodiments and examples appearing in the specification will not generally be read into the claims." *Comark Commc'ns, Inc. v. Harris Corp.*, 156 F.3d 1182, 1187 (Fed. Cir. 1998) (quoting *Constant v. Advanced Micro-Devices, Inc.*, 848 F.2d 1560, 1571 (Fed. Cir. 1988)); *accord Phillips*, 415 F.3d at 1323.

The prosecution history is another tool to supply the proper context for claim construction because a patent applicant may also define a term in prosecuting the patent. *Home Diagnostics, Inc. v. Lifescan, Inc.*, 381 F.3d 1352, 1356 (Fed. Cir. 2004) ("As in the case of the specification, a patent applicant may define a term in prosecuting a patent."). "[T]he prosecution history (or file wrapper) limits the interpretation of claims so as to exclude any interpretation that may have been

disclaimed or disavowed during prosecution in order to obtain claim allowance." *Standard Oil Co. v. Am. Cyanamid Co.*, 774 F.2d 448, 452 (Fed. Cir. 1985).

Although extrinsic evidence can be useful, it is "less significant than the intrinsic record in determining the legally operative meaning of claim language." *Phillips*, 415 F.3d at 1317 (citations and internal quotation marks omitted). Technical dictionaries and treatises may help a court understand the underlying technology and the manner in which one skilled in the art might use claim terms, but technical dictionaries and treatises may provide definitions that are too broad or may not be indicative of how the term is used in the patent. *Id.* at 1318. Similarly, expert testimony may aid a court in understanding the underlying technology and determining the particular meaning of a term in the pertinent field, but an expert's conclusory, unsupported assertions as to a term's definition are entirely unhelpful to a court. *Id.* Generally, extrinsic evidence is "less reliable than the patent and its prosecution history in determining how to read claim terms." *Id.*

The Supreme Court of the United States has "read [35 U.S.C.] § 112, ¶ 2 to require that a patent's claims, viewed in light of the specification and prosecution history, inform those skilled in the art about the scope of the invention with reasonable certainty." *Nautilus, Inc. v. Biosig Instruments, Inc.*, 134 S. Ct. 2120, 2129 (2014). "A determination of claim indefiniteness is a legal conclusion that is drawn from the court's performance of its duty as the construer of patent claims." *Datamize, LLC v. Plumtree Software, Inc.*, 417 F.3d 1342, 1347 (Fed. Cir. 2005) (citations and internal quotation marks omitted), *abrogated on other grounds by Nautilus,* 134 S. Ct. 2120. "Indefiniteness must be proven by clear and convincing evidence." *Sonix Tech. Co. v. Publ'ns Int'l, Ltd.*, 844 F.3d 1370, 1377 (Fed. Cir. 2017).

III. AGREED TERMS

In the February 17, 2026 Amended P.R. 4-3(a) Joint Claim Construction Statement (Dkt. 84 at 2) and the January 27, 2026 Joint Notice of Additional Agreed Constructions (Dkt. 74), the parties submitted agreed constructions for certain claim terms, and those agreements are set forth in Appendix A to this Claim Construction Memorandum and Order.

IV. DISPUTED TERMS

A. "antenna extends in a direction"

"antenna extends" ('458 Patent, Claims 1, 8, 14)	
Plaintiff's Proposed Construction	**Defendant's Proposed Construction**
"antenna is oriented"	"antenna extends (is oriented) in the direction corresponding to the general longitudinal axis of symmetry of the smallest rectangle in which the radiating element of the antenna can be inscribed, which is"

Dkt. No. 84, Ex. A at 18; Dkt. No. 88 at pp. 7–9 of 37.

Shortly before the start of the March 11, 2026 hearing, the Court provided the parties with the following preliminary construction of "antenna extends": "an antenna, or the slot of a slot antenna, is considered to extend (to be oriented) in the direction corresponding to the general longitudinal axis of symmetry of the smallest rectangle in which the radiating element of the antenna can be inscribed."

At the hearing, both sides were amenable to the Court's preliminary construction except that Plaintiff requested that the term for construction be expanded from "antenna extends" to "antenna extends in a direction," and as discussed on the record the parties reached agreement in that regard.

The Court therefore hereby construes "antenna extends in a direction" to mean **"an antenna, or the slot of a slot antenna, is considered to extend (to be oriented) in the direction corresponding to the general longitudinal axis of symmetry of the smallest rectangle in which the radiating element of the antenna can be inscribed."**

B. "operating wavelength"

"operating wavelength" ('458 Patent, Claim 14)	
Plaintiff's Proposed Construction	**Defendant's Proposed Construction**
No construction necessary.	"free-space operating wavelength"

Dkt. No. 84, Ex. A at 21; Dkt. No. 88 at pp. 9–10 of 37.

Shortly before the start of the March 11, 2026 hearing, the Court provided the parties with the following preliminary construction: "Plain meaning."

(1) The Parties' Positions

Plaintiff argues that Defendant's proposal would improperly narrow the scope of this term. Dkt. No. 75 at 5–6. Plaintiff submits that "[t]he specification recites both 'operating wavelength' and 'free-space operating wavelength," and Plaintiff argues that although "the term 'operating wavelength" may include the 'free-space operating wavelength' under certain conditions," "Defendant['s] proposed construction . . . would limit the term to exclude other conditions clearly contemplated by the patent." *Id.* at 7–8; *see id.* at 6–7.

Defendant responds that "[t]he '458 specification consistently compares the *physical* dimensions of a rectangle enclosing an antenna only to the *free-space* operating wavelength (the ratio of the speed of light in vacuum to frequency) of an antenna." Dkt. No. 77 at 4 (citation omitted); *see id.* at 4–5. Defendant argues that "a *free-space* operating wavelength—the ratio of

the speed of light in vacuum (a universal constant) to frequency—is unambiguous, and a suitable objective measure for physical antenna dimensions . . . ." *Id.* at 5. Defendant also urges that "[t]he repeated use of 'free-space operating wavelength' to describe the relevant physical dimensions indicates that even the shorter phrase '*operating wavelength'* means the same thing: a free-space operating wavelength." *Id.* at 7.

Plaintiff replies that "[t]he patentee made a deliberate choice to recite 'operating wavelength,' rather than 'free-space operating wavelength,' in the at-issue Claim 14," and "*all lengths* in the Patent that are compared to either the 'operating wavelength' or 'free-space operating wavelength' are electrical lengths, not physical lengths." Dkt. No. 86 at 2.

At the March 11, 2026 hearing, Defendant acknowledged that the term "operating wavelength," in general, is not limited to being a free-space operating wavelength, but Defendant maintained that the claim here at issue is directed to a particular embodiment that only makes sense if the "operating wavelength" is a free-space operating wavelength. Plaintiff responded by reiterating that the patentee chose to draft the claim to recite an "operating wavelength," not a "free-space operating wavelength."

(2) Analysis

Claim 14 of the '458 Patent recites (emphasis added):

> 14. A wireless handheld or portable device comprising:
> a ground plane;
> the ground plane is inscribed in a first rectangular area comprising a first side, a second side and a third side, a length of the second side being greater than a length of the first side and a length of the third side;
> a first antenna configured to transmit and receive electromagnetic waves corresponding to at least two frequency bands;
> the at least two frequency bands being used for mobile communication services;
> a second antenna configured to operate in at least one frequency band;
> the at least one frequency band being different from the at least two frequency bands;

> the first antenna extends in a direction substantially parallel to the first side;
> the first antenna is proximate to the first side;
> the second antenna extends in a direction substantially parallel to the third side;
> the second antenna is proximate to the third side;
> the second antenna is inscribed in a second rectangular area;
> a sum of a length and a width of the second rectangular area is smaller than a quarter of an *operating wavelength* of the second antenna;
> a geometry of the first antenna being different than a geometry of the second antenna;
> at least one of the first antenna and the second antenna is proximate to a corner of the first rectangular area; and
> the first antenna and the second antenna are located internally within the wireless handheld or portable device.

Defendant cites the principle that "when a patent repeatedly and consistently characterizes a claim term in a particular way, it is proper to construe the claim term in accordance with that characterization." *GPNE Corp. v. Apple Inc.*, 830 F.3d 1365, 1370 (Fed. Cir. 2016) (citation and internal quotation marks omitted); *see Nystrom v. Trex Co., Inc.*, 424 F.3d 1136, 1143–44 (Fed. Cir. 2005) ("[a]n examination of the term 'board' in the context of the written description . . . leads to the conclusion that the term 'board' must be limited to wood cut from a log," as the "context maintained throughout the written description" concerned "wood decking materials cut from logs, even though it acknowledges that other materials exist").

Defendant cites disclosures in the specification that refer to "free-space operating wavelength":

> In some examples, it will be advantageous to have the slot antenna (402) inscribed in a rectangular area (403) of width (405) smaller than 1/50 of the free-space operating wavelength of the slot antenna (402), and length (404) smaller than ¼ of the free-space operating wavelength. Being more general, in some embodiments the said width (405) divided by the free-space operating wavelength of the slot antenna will be smaller than, or equal to, at least one of the following fractions: 1/10, 1/30, 1/50, 1/60, 1/70, or 1/80. In the same way, for some embodiments, said length (404) divided by the free-space operating wavelength of the slot antenna can be smaller than, or equal to, at least one of the following fractions: ½, ⅓, or ¼. In some other instances, it will be advantageous that the sum of the length (404) and the width (405) of the rectangular area (403) in which the slot is inscribed be smaller

> than ½ of the free-space operating wavelength, or even smaller than ¼ of the free-space operating wavelength.

'458 Patent at 17:50–66; *see id.* at 17:45–49 ("In certain examples, the distance between the feeding point (408) and the closed end of the slot (407) will be less than, or equal to, 0.2%, 0.4%, 0.8%, 1.2% 1.6%, 2.5%, 3.3%, 4% or 8% of a free-space operating wavelength of the slot antenna."); *see also id.* at 22:62–23:12 (referring to fractions of "a free-space operating wavelength of the slot antenna").

The disclosures cited by Defendant, however, do not amount to "repeatedly and consistently characteriz[ing] [the] claim term in a particular way." *GPNE*, 830 F.3d at 1370. Indeed, these disclosures do not describe "operating wavelength" (other than using the term in conjunction with "free-space"). The applicable principle is therefore that "[a]lthough the specification may aid the court in interpreting the meaning of disputed claim language, particular embodiments and examples appearing in the specification will not generally be read into the claims." *Comark*, 156 F.3d at 1187 (quoting *Constant*, 848 F.2d at 1571); *accord Phillips*, 415 F.3d at 1323.

Moreover, the specification also discloses that a "material with high dielectric constant" can be used:

> Chip antennas may achieve some degree of miniaturization (for instance, by *loading the antenna with a material with high dielectric constant*), however, in many cases, they exhibit poor matching levels, and limited bandwidth, efficiency and/or gain.

'458 Patent at 2:55–57 (emphasis added). Plaintiff's expert opines that the "operating wavelength" in a material with high dielectric constant would be different than the "free-space operating wavelength." Dkt. No. 75, Ex. A, Dec. 22, 2025 Melde Decl. ¶ 35.

Plaintiff's expert thus persuasively opines that "free-space operating wavelength" is a narrower term than "operating wavelength." Dkt. No. 75, Ex. A, Dec. 22, 2025 Melde Decl. ¶ 35. Indeed, Defendant's expert submits that "free-space" refers to an empty space with no matter and no other electromagnetic or gravitational fields. *See* Dkt. No. 75, Ex. L, Dec. 22, 2025 Durgin Decl. ¶ 72. Finally, Defendant attempts to draw a distinction between "electrical length" and "physical length" (see Dkt. No. 77 at 5 (citing *id.* at Ex. S)), but Defendant identifies no such distinction in the specification, and Defendant's expert does not express any opinion regarding a distinction between "electrical length" and "physical length." *See* Dkt. No. 75, Ex. L, Dec. 22, 2025 Durgin Decl. ¶¶ 70–74.

The Court therefore hereby expressly rejects Defendant's proposed construction, and no further construction is necessary. *See U.S. Surgical*, 103 F.3d at 1568 ("Claim construction is a matter of resolution of disputed meanings and technical scope, to clarify and when necessary to explain what the patentee covered by the claims, for use in the determination of infringement. It is not an obligatory exercise in redundancy."); *see also O2 Micro Int'l Ltd. v. Beyond Innovation Tech. Co., Ltd.*, 521 F.3d 1351, 1362 (Fed. Cir. 2008); *Finjan, Inc. v. Secure Computing Corp.*, 626 F.3d 1197, 1207 (Fed. Cir. 2010) ("Unlike *O2 Micro*, where the court failed to resolve the parties' quarrel, the district court rejected Defendants' construction."); *ActiveVideo Networks, Inc. v. Verizon Commc'ns, Inc.*, 694 F.3d 1312, 1326 (Fed. Cir. 2012); *Summit 6, LLC v. Samsung Elecs. Co., Ltd.*, 802 F.3d 1283, 1291 (Fed. Cir. 2015); *Bayer Healthcare LLC v. Baxalta Inc.*, 989 F.3d 964, 977–79 (Fed. Cir. 2021).

The Court accordingly hereby construes "operating wavelength" to have its **plain meaning**.

C. "4G communications standard(s)"

"4G communication standard(s)" ('677 Patent, Claims 1, 4, 12; '200 Patent, Claims 1, 6, 11) **"frequency band(s) . . . associated with a 4G communication standard"** ('677 Patent, Claim 1) **"receive signals from a 4G communication standard"** ('677 Patent, Claim 12; '200 Patent, Claim 1) **"receive signals employing a 4G communication standard"** ('677 Patent, Claim 4) **"frequency band(s) . . . used by [a] 4G communication standard(s)"** ('200 Patent, Claims 6, 11)	
Plaintiff's Proposed Construction	**Defendant's Proposed Construction**
No construction necessary	"The '4G communication standard(s)' terms include frequency bands associated with/used by LTE, such as LTE Bands 12, 13, and 14."

Dkt. No. 84, Ex. A at 23–29; Dkt. No. 88 at pp. 10–15 of 37.

Shortly before the start of the March 11, 2026 hearing, the Court provided the parties with the following preliminary construction: "4G communications standards that had been adopted or proposed as of the effective filing date of the '677 Patent and the '200 Patent, including Long Term Evolution ('LTE')."

(1) The Parties' Positions

Plaintiff argues that "[t]he term '4G communication standard(s)' does not require construction because a POSITA would have understood the term to carry its plain and ordinary meaning in light of the patent specification and the state of 4G at the time the priority patent application was filed in 2006." Dkt. No. 75 at 8.

Defendant responds that "the term requires explanation, as the issue here is whether an antenna configured to use or support a frequency band associated with a 4G communication standard would have been configured to use LTE frequency bands, including LTE Bands 12–14." Dkt. No. 77 at 8.

Plaintiff replies that "Defendant[] do[es] not dispute that [it is] laying the groundwork for a later written-description argument—[it] merely deflect[s] that the issue 'is not yet ripe.'" Dkt. No. 86 at 3 (citation omitted). Plaintiff argues that "[t]he parties will present expert testimony and evidence at trial on numerous different frequency bands encompassed by 4G communication standards (along with many other aspects of the complex technologies in this case)," and "[i]t is Defendant['s] cherry-picking of LTE and LTE Bands 12–14 that will confuse the jury." *Id.*

(2) Analysis

Claim 1 of the '677 Patent, for example, recites (emphasis added):

1. A wireless device comprising:
    an antenna system comprising:
        a ground plane;
        a first antenna within the wireless device and configured to support at least three frequency bands contained within first and second frequency ranges of the electromagnetic spectrum, the second frequency range being higher in frequency than the first frequency range and at least one of the three frequency bands being associated with a *4G communication standard*, the first antenna being proximate to a first short side of a ground plane rectangle enclosing the ground plane and defining a first antenna contour comprising an entire perimeter of the first antenna, wherein the first antenna contour has a level of complexity defined by complexity factor F21 having a value of at least 1.20 and complexity factor F32 having a value less than 1.75; and
        a second antenna within the wireless device and configured to support at least one frequency band different from the at least three frequency bands supported by the first antenna, the second antenna being arranged completely within the ground plane rectangle.

The specification discloses, for example:

> A MFWD [(multifunction wireless device)] incorporating 3.5G or 4G features (i.e. comprising 3G and other advanced services such as for instance HSDPA, WiBro, WiFi, WiMAX, UWB or other high-speed wireless standards, hereinafter 4G services) might require operation in additional frequency bands corresponding to said 4G standards (for instance, bands within the frequency region 2–11 GHz and some of its sub-regions such as for instance 2–11 GHz, 3–10 GHz, 2.4–2.5 GHz and 5–6 GHz or some other bands).

'677 Patent at 25:1–9.

In *ADT*, the Court construed "4G communication standard(s)" in the '200 Patent and United States Patent No. 8,738,103 ("the '103 Patent," attached to Defendant's responsive claim construction brief as Exhibit T; the '600 Patent asserted in the above-captioned case resulted from a continuation of the '103 Patent). *See ADT* at 20–22. ADT had submitted that no 4G standard was promulgated until 2008, more than a year after the effective filing date in 2006, and ADT argued that the recital of 4G "standards" was undefined and therefore indefinite. *Id.* at 20. The Court found that "a skilled artisan interpreting these terms in 2006 would have known there was not a finalized 4G standard at the time, and would have therefore interpreted this language in light of the then-proposed standards," noting that ADT had not "shown by clear and convincing evidence that a skilled artisan would have two different understandings as to which frequencies compose a '4G communication standard' in 2006 and 2008, respectively." *Id.* at 21.

In the present case, Defendant does not assert indefiniteness. Plaintiff "agrees that '4G communication standard(s)' include frequency bands associated with/used by LTE, such as LTE Bands 12, 13, and 14," but Plaintiff maintains that "there is no good reason to specifically highlight these frequency bands over other frequency bands included in 4G communication standards." Dkt. No. 75 at 9. Defendant argues that its proposed construction is necessary because "[a] juror without an electrical engineering degree is unlikely to know what the definition of the '4G communication standard' is, let alone what specific bands it encompasses." Dkt. No. 77 at 7–8.

On balance, Defendant does not persuasively demonstrate that the finder of fact would be assisted by referring to particular bands that the 4G communication standards "include," "such as" LTE Bands 12, 13, and 14. If anything, Defendant's proposed construction would tend to confuse the finder of fact as to whether all bands within the scope of the term must be akin to "LTE Bands 12, 13, and 14."

The parties agree as a general matter, however, that "4G communication standard(s)" includes LTE bands. Dkt. No. 75 at 9; Dkt. No. 77 at 7–8. In light of this substantive agreement, specific LTE bands need not be addressed in a construction of "4G communication standard(s)." Further, as Plaintiff submits in its reply brief, "a trial court should certainly not prejudge the ultimate infringement analysis by construing claims with an aim to include or exclude an accused product or process." *Wilson Sporting Goods Co. v. Hillerich & Bradsby Co.*, 442 F.3d 1322, 1326 (Fed. Cir. 2006).

Finally, Plaintiff argues that Defendant's proposed construction is designed to set up a later argument regarding lack of written description as to LTE Bands 12, 13, and 14. Dkt. No. 75 at 11–12. Any such dispute regarding written description does not significantly affect the Court's claim construction analysis. *See Phillips*, 415 F.3d at 1327 ("we have certainly not endorsed a regime in which validity analysis is a regular component of claim construction") (citation omitted).

Construing the disputed term to expressly include "LTE," however, will assist the finder of fact by avoiding potential confusion about whether LTE is included, particularly when considering that LTE standards were not finalized until after the effective filing date. *TQP Dev., LLC v. Merrill Lynch & Co.*, No. 2:08-CV-471-WCB, 2012 WL 1940849, at *2 (E.D. Tex. May 29, 2012) (Bryson, J., sitting by designation) ("some construction of the disputed claim language will assist the jury to understand the claims").

The Court accepts Plaintiff's proposal at the March 11, 2026 hearing that "including" in the Court's preliminary construction be replaced by "including but not limited to." As for Plaintiff's proposal of replacing "that had been adopted or proposed" with "that were under consideration," however," Plaintiff's proposal would tend to confuse rather than clarify the scope of the claims.

The Court therefore hereby construes "4G communications standard(s)" to mean **"4G communications standards that had been adopted or proposed as of the effective filing date of the '677 Patent and the '200 Patent, including but not limited to Long Term Evolution ('LTE')."**

D. "planar antenna," "antenna is planar," and "non-planar antenna"

"planar antenna" ('149 Patent, Claims 1, 2) **"antenna is planar"** ('149 Patent, Claim 15)	
Plaintiff's Proposed Construction	**Defendant's Proposed Construction**
No construction necessary.	"antenna that lies in a single plane"
"non-planar antenna" ('149 Patent, Claims 7, 8)	
Plaintiff's Proposed Construction	**Defendant's Proposed Construction**
No construction necessary.	"antenna that does not lie in a single plane"

Dkt. No. 84, Ex. A at 31–36; Dkt. No. 88 at pp. 36–37 of 37.

Plaintiff argued that no construction is necessary because "the terms define themselves (*e.g.*, an antenna in a plane or an antenna not in a plane) and can be easily understood by a POSITA." Dkt. No. 75 at 13. Plaintiff also argued that "a POSITA would understand the plain

and ordinary meaning of 'antenna' to include only the antenna's radiating elements, rather than the structure that houses those elements or other components—such as feeding tabs—that connect with that structure but are not themselves part of the antenna's radiating elements." *Id.*

Defendant responded: "Given Fractus' arguments for these terms (Br. 13-14), Defendant[] agree[s] to adopt the compromise constructions that Fractus appears to propose: 'antenna whose radiating elements lie in one plane,' and 'antenna whose radiating elements do not lie in one plane.'" Dkt. No. 77 at 9.

Plaintiff replied that construction is unnecessary but that "if the Court is inclined to construe these terms, the parties now agree that 'planar antenna' and 'antenna is planar' mean that 'the antenna's radiating elements lie in one plane,' and that 'non-planar antenna' means that 'the antenna's radiating elements do not lie in one plane.'" Dkt. No. 86 at 4.

Shortly before the start of the March 11, 2026 hearing, the Court provided the parties with the following preliminary constructions: "antenna consisting of radiating elements that lie in one plane"; and "antenna consisting of radiating elements that do not lie in one plane."

At the hearing, the parties agreed with the Court's preliminary constructions. The Court therefore hereby construes these terms as set forth in the following chart:

Term	Construction
"planar antenna" "antenna is planar"	**"antenna consisting of radiating elements that lie in one plane"**
"non-planar antenna"	**"antenna consisting of radiating elements that do not lie in one plane"**

E. "complexity factor"

"complexity factor" ('677 Patent, Claims 1, 5, 6, 9, 12, 16; '200 Patent, Claims 1, 6, 11; '149 Patent, Claims 1, 5, 7, 9, 13, 17)	
Plaintiff's Proposed Construction	**Defendant's Proposed Construction**
Not indefinite. No construction necessary.	Indefinite

Dkt. No. 84, Ex. A at 1; *see id.* at 1–8; *see also* Dkt. No. 88 at pp. 10–27 of 37.

The parties also identify larger terms that include the term "complexity factor," and as to those larger terms the only dispute is whether "complexity factor" is indefinite. Dkt. No. 75 at 14 n.5; *see* Dkt. No. 84, Ex. A at 1–8.

(1) The Parties' Positions

Plaintiff argues that "Defendant[] cannot establish that there are multiple ways to determine the 'antenna contour' that lead to materially different complexity factors," and "the specification provides only one method for determining the 'antenna contour.'" Dkt. No. 75 at 16. Plaintiff urges that "the so-called 'unfolding' method" asserted by Defendant's expert should be rejected because "*nothing* in the patent specification teaches the so-called 'unfolding method'" and because "such a method would plainly conflict with other portions of the specification." *Id.* at 20 & 21 (citation omitted). Further, Plaintiff argues that Defendant cannot show indefiniteness as to "the method for defining the G2 grid dimensions" because "the patent provides explicit instructions for a single method of determining the number of rows and columns in the G2 grid," and "[t]he specification . . . unambiguously instructs that the G2 grid must consist of nine columns." *Id.* at 24.

Defendant responds that "[t]he same antenna falls inside or outside the claimed 'complexity factor' ranges depending on the measurement method." Dkt. No. 77 at 9 (citation omitted); *see id.* at 13. Defendant cites the Court's analysis in *ADT*, arguing that whereas *ADT* found insufficient expert testimony (regarding whether or not the record suggested using one method in particular), "Defendant[] ha[s] done so here—unrebutted testimony on this point." *Id.* at 10. Regarding determining the antenna contour, Defendant argues that Plaintiff does not justify departing from the *ADT* analysis or ignoring Plaintiff's own infringement contentions in *ADT*. *See id.* at 12–18. Defendant also urges that Plaintiff's expert, Dr. Melde, "countered none of Dr. Durgin's [(Defendant's expert's)] analysis showing that the specification teaches at least two methods (Melde Dec. ¶28), leaving Fractus with mere attorney argument." *Id.* at 20. Regarding selecting the number of rows and columns for grid G_2, Defendant argues that *ADT* expressly rejected Plaintiff's argument that nine columns must be used. *Id.* at 21. Defendant urges that "[u]nless this Court were to reverse its holding that there are multiple ways of selecting the columns/rows for grid G2, Fractus provides no evidence rebutting Dr. Durgin's testimony on the other prongs." *Id.* at 22 (citation omitted).

Plaintiff replies that "[a]s Plaintiff explained in its opening brief, the specification teaches only one method for determining the antenna contour of a three-dimensional antenna: the orthogonal projection method," and "the 'unfolding' method would violate the specification's teachings that the antenna contour is circumscribed within the four corners of the antenna rectangle." Dkt. No. 86 at 4–5 (citation omitted). Plaintiff also submits that, in *ADT*, Plaintiff did not dispute whether there are multiple methods for determining the antenna contour. *Id.* at 5. Plaintiff argues:

> Plaintiff would only be barred from advancing a different position in a *different case* under the doctrines of preclusion or estoppel. Defendant do[es] not advance

> any arguments that those doctrines apply and thereby waive them. That is for good reason: those doctrines are inapplicable where, as in *ADT*, the issue was not disputed, the Court did not actually decide it, and there was no final judgment.

Id. Plaintiff submits that "Plaintiff revised its position after reviewing the Court's *ADT Markman* Order, which indicated that Defendant['s] position here (and Plaintiff's position in *ADT*) is incorrect." *Id.* at 6 (footnote omitted). Plaintiff also argues that, despite Defendant having the burden of persuasion on this issue, "Defendant make[s] no effort to independently show that their 'unfolding' method is taught anywhere in the specification." *Id.* at 6.

As for the G_2 grid dimensions, Plaintiff urges that "[t]he specification cannot be clearer: 'a cell width (W2) *is* selected to be *equal to a ninth (1/9)* of the length of the longer side of the antenna rectangle' and 'the antenna rectangle *is* tessellated perfectly with *9 by (2n+l) cells* of grid G2.'" *Id.* at 8 (quoting '677 Patent at 17:44–46 & 17:65–67). Plaintiff also submits that "the specification's unambiguous statements that the G2 grid must have nine columns are reflected in *every single* Figure with a G2 grid." *Id.* (citations omitted). Plaintiff argues that the Court erred in *ADT*, and "Plaintiff respectfully requests the Court reconsider its conclusion that the specification does not require nine columns in light of the intrinsic evidence to the contrary described above and in Plaintiff's opening brief." *Id.* at 8–9.

(2) Analysis

The parties agree that the applicable legal principle for evaluating Defendant's indefiniteness argument is set forth in the *Ball Metal* case:

> [A] claim may be invalid as indefinite when (1) different known methods exist for calculating a claimed parameter, (2) nothing in the record suggests using one method in particular, and (3) application of the different methods result in materially different outcomes for the claim's scope such that a product or method may infringe the claim under one method but not infringe when employing another method.

Ball Metal Beverage Container Corp. v. Crown Packaging Tech., Inc., No. 2020-1212, 838 F. App'x 538, 542 (Fed. Cir. Dec. 31, 2020). Relevant legal principles are also set forth in additional decisions cited in the present case. *See Akamai Techs., Inc. v. MediaPointe, Inc.*, 159 F.4th 1370, 1379 (Fed. Cir. 2025); *see also Dow Chem. Co. v. Nova Chems. Corp. (Canada)*, 803 F.3d 620, 634 (Fed. Cir. 2015); *Teva Pharms. USA, Inc. v. Sandoz, Inc.*, 789 F.3d 1335, 1341–45 (Fed. Cir. 2015).

In *ADT*, the Court stated that *Ball Metal*, which was relied upon by ADT (the patent challenger), "is non-precedential but concisely summarizes the applicable law . . . ." *ADT* at 22.

In *ADT*, the Court addressed indefiniteness arguments as to the '200 Patent and the related '103 Patent. *See ADT* at 22–29. The Court found that ADT had not demonstrated indefiniteness, but the Court stated that the issue could be raised again at the summary judgment stage. *Id.* at 29. The case settled without the issue being further addressed.

In the present case, Defendant asserts indefiniteness as to the same two issues discussed in *ADT*, namely the antenna contour and the grid G_2.

Claim 1 of the '677 Patent, for example, recites (emphasis added):

> 1. A wireless device comprising:
> an antenna system comprising:
> a ground plane;
> a first antenna within the wireless device and configured to support at least three frequency bands contained within first and second frequency ranges of the electromagnetic spectrum, the second frequency range being higher in frequency than the first frequency range and at least one of the three frequency bands being associated with a 4G communication standard, the first antenna being proximate to a first short side of a ground plane rectangle enclosing the ground plane and defining a first antenna contour comprising an entire perimeter of the first antenna, wherein the first antenna contour has *a level of complexity defined by complexity factor F21 having a value of at least 1.20 and complexity factor F32 having a value less than 1.75*; and

> a second antenna within the wireless device and configured to support at least one frequency band different from the at least three frequency bands supported by the first antenna, the second antenna being arranged completely within the ground plane rectangle.

The specification discloses:

> In accordance with embodiments of the invention, the level of complexity of an antenna contour can be advantageously parameterized by means of two complexity factors, hereinafter referred to as F_{21} and F_{32}, which capture and characterize certain aspects of the geometrical details of the antenna contour (such as for instance its edge-richness, angle-richness and/or discontinuity-richness) when viewed at different levels of scale.
>
> * * *
>
> The complexity factors F_{21} and F_{32} have turned out to be relevant parameters that allow for an effective antenna design. Evaluation of those parameters gives good hints on possible changes of antennas in order to obtain improved antennas.
>
> In some cases the parameters F_{21} and F_{32} allow for easy identification of unsuitable antennas. Further those parameters may also be used in numerical optimization algorithms as target values or to define target intervals in order to speed up such algorithms.

'677 Patent at 16:54–61 & 21:10–19; *see id.* at 19:1–14 (computation of F_{21}) & 20:1–5 (computation of F_{32}). The parties agree that the specifications of the '200 Patent and the '149 Patent are substantively identical to the specification of the '677 Patent. Dkt. No. 75 at 14 n.6; Dkt. No. 77 at 10 n.7.

The specification refers to an "antenna box":

> An antenna box for the MFWD 100 is herein defined as being the minimum-sized parallelepiped of square or rectangular faces that completely encloses the antenna volume of space and wherein each one of the faces of the minimum-sized parallelepiped is tangent to at least one point of the volume.

'677 Patent at 11:24–31.

The specification also refers to an "antenna rectangle":

> For one purpose of the design of the antenna system, an antenna rectangle is defined as being the orthogonal projection of the antenna box along the normal to the face with largest area of the antenna box.

Id. at 14:11–14.

The specification discloses:

> In a MFWD 100 according to the present invention, the structure of the antenna system is geometrically defined by its antenna contour. The antenna contour of the antenna system is a set of joined and/or disjointed segments comprising:
>
> the perimeter of one or more antenna elements placed in the antenna rectangle,
>
> the perimeter of closed slots and/or closed apertures defined within the antenna elements, and/or the orthogonal projection onto the antenna rectangle of perimeters of antenna elements, or perimeters of or parts of antenna elements that are placed in the antenna box but not in the antenna rectangle.

Id. at 15:6–16.

"FIG. 3 shows an example of a structure of an antenna system contained within an antenna box 301." '677 Patent at 27:44–45. Figure 4 is disclosed as relating to a "manufacturing process . . ., for instance, a stamping process," in which "[t]he first and second parts 405 and 406 are bent or folded so that their orthogonal projection does not extend outside the antenna rectangle." *Id.* at 28:29–33. Figures 3 and 4 are reproduced here and illustrate "antenna box 301" and "antenna rectangle 351" (Figure 4 shows, "for instance, a stamping process" for manufacturing, *id.* at 28:14–15):

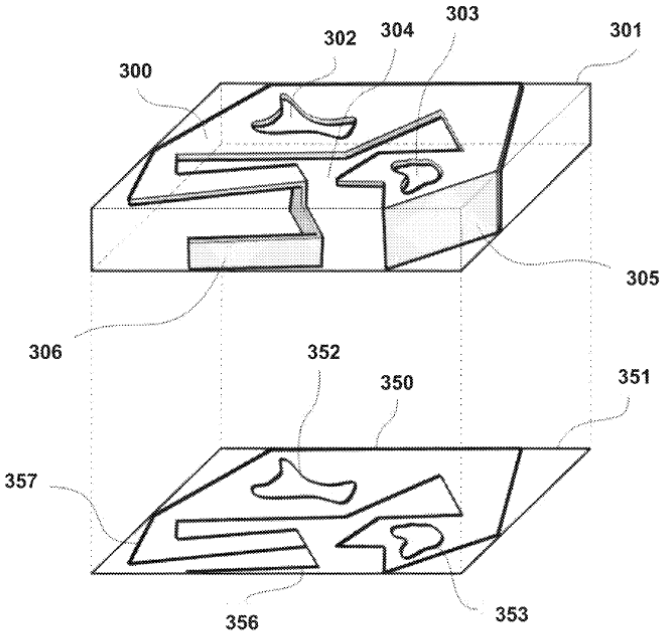
300
302
304
303
301
305
306
352
350
351
357
356
353

FIG. 3

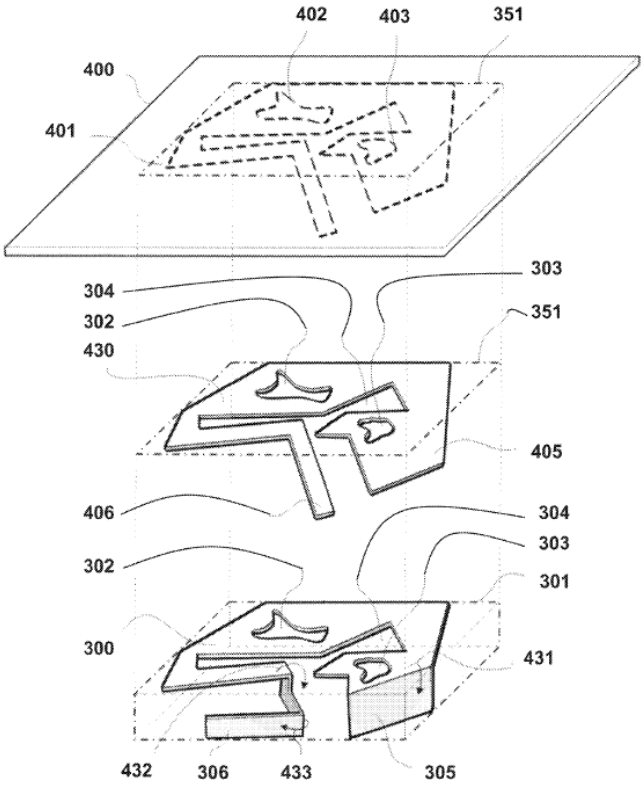
402
403
351
400
401
304
302
430
303
351
405
406
304
303
302
301
300
431
432
306
433
305

FIG. 4

In *ADT*, the Court stated that "Fractus does not dispute there are at least two ways of determining an antenna contour of an antenna." *ADT* at 23 (citation omitted). The parties in *ADT* addressed a so-called "unfolding" method for determining an antenna contour. *Id.* at 24. The Court noted that "the Court does not see how there could *not* be materially different results for at least some possible antennas." *Id.* at 25.

In the present case, Plaintiff opposes any "unfolding" method, stating that "Plaintiff revised its position after reviewing the Court's *ADT Markman* Order, which indicated that Defendant['s] position here (and Plaintiff's position in *ADT*) is incorrect." Dkt. No. 86 at 6 (footnote omitted).

Plaintiff's opening claim construction brief in *ADT* referred to using an "orthogonal projection" *or* including perimeters of nonplanar elements:

> [T]he antenna contour is a set of segments comprising all the perimeters and parts of an antenna. In the case of antennas not arranged on a two-dimensional plane (also called "nonplanar antennas"), the antenna contour can be represented using *either* an orthogonal projection of the perimeters of nonplanar elements onto the two-dimensional antenna rectangle (as shown in Figure 3) *or simply by including the perimeters of these nonplanar elements*, *see* Ex. 3 [('103 Patent)] at Figure 4 (401); Ex. 11 [('200 Patent)] at Figure 4 (401).

Dkt. No. 77, Ex. X, Nov. 16, 2023 Fractus's Opening Claim Construction Br. at 25 (emphasis added). Plaintiff thus affirmatively set forth "including the perimeters of these nonplanar elements" as an *alternative* to orthogonal projection. *Id.*

Also, during the claim construction hearing in *ADT*, Plaintiff affirmatively argued that the orthogonal projection method could *not* be used for Claim 1 of the '200 Patent:

> [Y]ou can't use orthogonal projection for the claim term that they're claiming there's a materially different outcome from. So this Exhibit I deals with Claim 1 of the '200 patent. And when describing the antenna contour, that patent uses the words: A first antenna contour comprising, quote, an entire perimeter of the first antenna.

> Now, this goes a little bit to the second factor, the guidance the patents provide, but throughout the specification of the patents, the patents never describe an orthogonal projection of a perimeter itself as a perimeter.

Dkt. No. 77, Ex. U, Jan. 18, 2024 Hr'g Tr. at 95:16–96:1.

"[W]here a party assumes a certain position in a legal proceeding, and succeeds in maintaining that position, he may not thereafter, simply because his interests have changed, assume a contrary position, especially if it be to the prejudice of the party who has acquiesced in the position formerly taken by him." *New Hampshire v. Maine*, 532 U.S. 742, 749 (2001) (quoting *Davis v. Wakelee*, 156 U.S. 680, 689 (1895)); *see Hall v. GE Plastic PTE Ltd.*, 327 F.3d 391, 396 (5th Cir. 2003) ("Judicial estoppel prevents a party from asserting a position in a legal proceeding that is contrary to a position previously taken in the same or some earlier proceeding.") (citation and internal quotation marks omitted). The doctrine of judicial estoppel is governed by regional circuit law. *See, e.g., Source Search Techs., LLC v. LendingTree, LLC*, 588 F.3d 1063, 1071 (Fed. Cir. 2009).

At the March 11, 2026 hearing, Plaintiff argued that judicial estoppel does not apply because the "unfolding" method was not disputed in *ADT* and did not affect the outcome and because, Plaintiff argues, it did not benefit from its position. But as Defendant argued at the March 11, 2026 hearing, Plaintiff does appear to have benefited from its position in *ADT* by way of Plaintiff using that position to argue infringement in *ADT*. Regardless, however, judicial estoppel arises because the Court relied on Plaintiff's position when entering a claim construction order in *ADT*. *ADT* at 24 ("Given that Fractus does not dispute there are multiple methods for arriving at the antenna contour, the first prong of *Ball Metal*'s test is satisfied."); *see Hall*, 327 F.3d at 398–99 ("The 'judicial acceptance' requirement does not mean that the party against whom the judicial estoppel doctrine is to be invoked must have prevailed on the merits. Our cases suggest

that doctrine may be applied whenever a party makes an argument with the explicit intent to induce the district court's reliance.") (citations and internal quotation marks omitted). As shown above, Plaintiff affirmatively applied an interpretation in which a method other than orthogonal projection could be used, and the Court expressly relied on Plaintiff's position. *ADT* at 24; *see* Dkt. No. 77, Ex. X, Nov. 16, 2023 Fractus's Opening Claim Construction Br. at 25 (quoted above); *see also* Dkt. No. 77, Ex. U, Jan. 18, 2024 Hr'g Tr. at 95:16–96:1 (quoted above).

The authorities cited by Plaintiff are unpersuasive. In *Allergan Sales*, the issue was issue preclusion, not judicial estoppel. *Allergan Sales, LLC v. Sandoz Inc.*, No. 2:12-CV-207, 2016 WL 1224868, at *4 (E.D. Tex. Mar. 29, 2016) (Gilstrap, J.). Moreover, the prior litigation in *Allergan Sales* involved an agreed-upon construction of the claim term at issue, so "there was no dispute that the Court decided." *Id.*, at *7. Thus, whereas the prior position in *Allergan* involved an *undisputed claim term*, here Plaintiff took an affirmative position in *ADT* regarding interpretation of a disputed term. Even if the particular point now disputed was not a matter of dispute in *ADT*, the Court accepted Plaintiff's position when addressing a *disputed claim term*. In *Paltalk*, the Court found that a party was not bound by the claim construction position taken by a predecessor-in-interest, but this authority is inapplicable because the prior position here at issue was Plaintiff's own position. *Paltalk Holdings, Inc. v. Microsoft Corp.*, No. 2:06-CV-367, 2008 WL 4830571, at *4–*5 (E.D. Tex. July 29, 2008) (Folsom, J.)

The doctrine of judicial estoppel therefore holds Plaintiff to the position it took in *ADT* during claim construction proceedings and when arguing infringement in that case. Plaintiff is estopped from contesting the first prong of the *Ball Metal* analysis, namely that different known methods existed for determining the antenna contour. 838 F. App'x at 542. Alternatively, even

without judicial estoppel, the specification supports finding that different methods exist. *See* '677 Patent at 15:6–16 (reproduced above).

As for the third prong of *Ball Metal*, the Court noted that "the Court does not see how there could *not* be materially different results for at least some possible antennas." *ADT* at 25. In the present case, the analysis of Defendant's expert is further persuasive as to this prong, analyzing and opining that "applying a prior art technique to an example antenna that has *below* the claimed level of complexity using the projection method causes it to have *above* the claimed level of complexity when it is analyzed using the unfolding method," and "[a]s such, a POSA would not have been able to evaluate whether an obvious variant of an example antenna in the specification is within the bounds of the claim." Dkt. No. 75, Ex. L, Dec. 22, 2025 Durgin Decl. ¶ 131; *see id.* at ¶¶ 111–131.

Finally, as for the second prong of *Ball Metal* ("nothing in the record suggests using one method in particular"), Plaintiff argues that the "unfolding" technique is inconsistent with the teachings of the specification. Plaintiff cites the Court's statement in a footnote in *ADT* that:

> Because the grids "are adaptive to the antenna rectangle," determining the antenna rectangle must happen before the construction of the grids. *See* '103 Patent at 16:36–46. In other words, the cell size of the grids is chosen based on antenna rectangle, not the profile of the unfolded antenna. In fact, the Court sees no way in which an unfolded antenna would *not* exceed the boundaries of the antenna rectangle given that the rectangle is based on the "orthogonal projection" of the antenna.

ADT at 25 n.6.

Plaintiff also cites disclosures in the specification that: "one design demand for antennas of multifunctional wireless devices is usually that the antenna be small in order to occupy as little space as possible within the MFWD"; "[t]he antenna contour needs to make efficient use of the area of the antenna rectangle"; "the antenna contour preferably comes into contact with each of

the four (4) sides of the antenna rectangle in at least one point of each side of the antenna rectangle"; and the G_1, G_2, and G_3 grids "are placed on the antenna rectangle." '677 Patent at 1:48–50, 16:13–20 & 16:62–65; *see also id.* at 27:59–61 (referring to Figure 3: "The antenna rectangle 351 contains the antenna contour 350 associated with the antenna element 300.").

The word "unfolding," however, has been used by parties in litigation to represent a conceptual notion for ease of visualization. The visualization does not actually move the relevant structures, and as Fractus stated in *ADT*, the perimeters of "nonplanar antennas" can include perimeters of nonplanar elements. Dkt. No. 77, Ex. X, Nov. 16, 2023 Fractus's Opening Claim Construction Br. at 25 ("including the perimeters of the[] nonplanar elements"). Such perimeters can be measured in three-dimensional space without performing any actual unfolding. Plaintiff's argument that "rather than overlay the G2 grid on top of the antenna rectangle, as the specification provides, [Defendant's expert] mistakenly overlays it on top of the 'unfolded' antenna curve" (Dkt. No. 75 at 23) therefore does not persuasively demonstrate any inconsistency between the "unfolding" method and the specification.

Finally, the full opinion of Plaintiff's expert on this disputed term, as set forth in the expert's declaration, is as follows:

> 28. I do not believe it is necessary to construe "complexity factor" because a person of ordinary skill in the art would understand its plain and ordinary meaning in the context of the patents without further elaboration. If asked to define the ordinary meaning of "complexity factor," I would say it means a numerical value calculated using a formula that parameterizes the level of complexity of an antenna that captures and characterizes certain aspects of the geometrical details of the antenna contour. The specifications and claim language of the '677, '200, and '149 Patents support this understanding. The claims of the three patents recite that the antennas satisfy certain values of complexity factors F21 and F32 in order to achieve the desired antenna performance. In describing these "complexity factor(s)," the patents state that "the level of complexity of an antenna contour can be advantageously parameterized by means of two complexity factors . . . F21 and F32 . . . which capture and characterize certain aspects of the geometrical details of the antenna contour . . . when viewed at different levels of scale." '677 Patent, 16:54–

> 61; '200 Patent, 16:64–17:4; '149 Patent, 16:64–17:4. The three patents explain precisely how to calculate the complexity factors F21 and F32, how to measure the inputs into these calculations, and how to orient the antennas such that the necessary measurements can be made. More specifically, in directing a person of ordinary skill in the art to analyze antennas using complexity factors, *the patents introduce the related concepts of antenna boxes, antenna rectangles, and antenna contours. The patents' specifications, coupled with the claim language, establish the proper method for measuring these inputs into the complexity factor calculations. See, e.g.*, '677 Patent, 15:6–16, Claim 1; '200 Patent, 15:16–26, Claim 1; '149 Patent, 15:16–26, Claim 1. The specifications then explain how to calculate the complexity factor by overlaying the antenna contour on three grids. The specifications lay out in detail (1) the basic construction of the grids, (2) how many columns and rows the grids should have, (3) the ratio between the sizes of their cells, (4) where the corners of the grids should be located relative to the feeding point, and (5) the precise equations to be applied to calculate the factors in question. *See, e.g.*, '677 Patent, 16:54–20:40; '200 Patent, 17:26–20:52; '149 Patent, 17:26–20:52. The specifications also explain how the calculated complexity factor can be used to analyze and improve antenna performance. *See, e.g.*, '677 Patent, 21:10–26:54; '200 Patent, 21:22–26:67; '149 Patent, 21:22–26:67. In light of this, I disagree with Defendants' view that the term "complexity factor" is indefinite. Based on the patents' teachings and claim language, a person of ordinary skill in the art would understand the proper method for measuring the inputs and calculating the "complexity factor," as well as how to use the calculation to analyze and improve antenna performance.

Dkt. No. 75, Ex. A, Dec. 22, 2025 Melde Decl. ¶ 28 (emphasis added). Plaintiff's expert thus does not persuasively demonstrate reasonable certainty as to how the antenna contour is determined.

In sum, Defendant meets all three prongs of the *Ball Metal* test as to how the antenna contour is determined (as part of determining the recited "complexity factor" terms). 838 F. App'x at 542; *see Teva*, 789 F.3d at 1341–45.

The Court therefore finds indefiniteness based on lack of reasonable certainty as to how the antenna contour is determined and thus, in turn, how each "complexity factor" is determined. Having found indefiniteness on this basis, the Court does not reach the dispute regarding whether there is a lack of reasonable certainty as to how grid G_2 is determined.

The Court accordingly hereby finds that "complexity factor" is **indefinite**.

F. "close"

"close" ('200 Patent, Claim 6)	
Plaintiff's Proposed Construction	**Defendant's Proposed Construction**
Not indefinite. No construction necessary.	Indefinite

Dkt. No. 84, Ex. A at 8–15; Dkt. No. 88 at pp. 27–34.

At the March 11, 2026 hearing, the parties submitted that this term is no longer in dispute and that this term need not be addressed by the Court. The Court therefore does not address this term.

V. CONCLUSION

The Court adopts the constructions set forth in this opinion for the disputed terms of the patent-in-suit. The parties are ordered that they may not refer, directly or indirectly, to each other's claim construction positions in the presence of the jury. Likewise, the parties are ordered to refrain from mentioning any portion of this opinion, other than the actual definitions adopted by the Court, in the presence of the jury. Any reference to claim construction proceedings is limited to informing the jury of the definitions adopted by the Court.

SIGNED this 17th day of March, 2026.

ROY S. PAYNE
UNITED STATES MAGISTRATE JUDGE

APPENDIX A

Term	Agreed Construction
"substantially parallel" ('458 Patent, Claims 1, 8, 14)	"forming an angle of less than or equal to approximately 30 degrees"
"grid-dimension curve" ('365 Patent, Claims 1, 7, 8, 31)	"a curve geometry having a grid dimension that is greater than one (1), where the grid-dimension may be calculated as follows: [1] A first grid having square cells of length L1 is positioned over the geometry of the curve, such that the grid completely covers the curve. [1a] The number of cells (N1) in the first grid [1b] that enclose at least a portion of the curve [1c] are counted. [2] Next, a second grid having square cells of length L2 is similarly positioned to completely cover the geometry of the curve, and [2a] the number of cells (N2) in the second grid [2b] that enclose at least a portion of the curve [2c] are counted. [3] In addition, the first and second grids should be positioned within a minimum rectangular area enclosing the curve, such that no entire row or column on the perimeter of one of the grids fails to enclose at least a portion of the curve. [4] The first grid should include at least twenty-five cells, and [5] the second grid should include four times the number of cells as the first grid. Thus, the length (L2) of each square cell in the second grid should be one-half the length (L1) of each square cell in the first grid. [6] The grid dimension (Dg) may then be calculated with the following equation: $D_g = -\frac{log(N2) - log(N1)}{log(L2) - log(L1)}$ "
"ground plane rectangle" ('677 Patent, Claims 1, 6, 12, 15; '200 Patent, Claims 1, 6, 11; '149 Patent, Claims 1, 3, 4, 7, 12, 13, 19, 20)	"the minimum-sized rectangle that encompasses the ground plane of the antenna system"

Dkt. No. 70 at 1; Dkt. No. 74; Dkt. No. 75 at 1–2; Dkt. No. 77 at v & 1; Dkt. No. 88 at pp. 34–37 of 37.