US 20130150900A1

(19) United States

(12) Patent Application Publication

Haddad et al.

(10) Pub. No.: US 2013/0150900 A1

(43) Pub. Date: Jun. 13, 2013

(54) **ORTHOPEDIC PLATE, ORTHOPEDIC DEVICE, METHOD OF COUPLING BONE SEGMENTS, AND METHOD OF ASSEMBLING AN ORTHOPEDIC PLATE**

(71) Applicant: **Dr. Steven L. Haddad**, Glenview, IL (US)

(72) Inventors: **Steven L. Haddad**, Glenview, IL (US); **Paul Bond**, Chicago, IL (US)

(73) Assignee: **Dr. Steven L. Haddad**, Glenview, IL (US)

(21) Appl. No.: **13/708,213**

(22) Filed: **Dec. 7, 2012**

Related U.S. Application Data

(60) Provisional application No. 61/569,052, filed on Dec. 9, 2011.

Publication Classification

(51) **Int. Cl.**

A61B 17/80 (2006.01)

A61B 17/17 (2006.01)

(52) **U.S. Cl.**

CPC ***A61B 17/809*** (2013.01); ***A61B 17/17*** (2013.01)

USPC **606/290**; 606/87

(57) **ABSTRACT**

An orthopedic plate comprising, a frame portion and a bearing rotatably coupled with the frame portion, wherein the bearing defines an opening configured to receive a fastener for fastening the orthopedic plate to a body, wherein the bearing includes an outer surface that is eccentric to the opening such that a position of the opening with respect to the frame portion is adjustable as the bearing rotates.

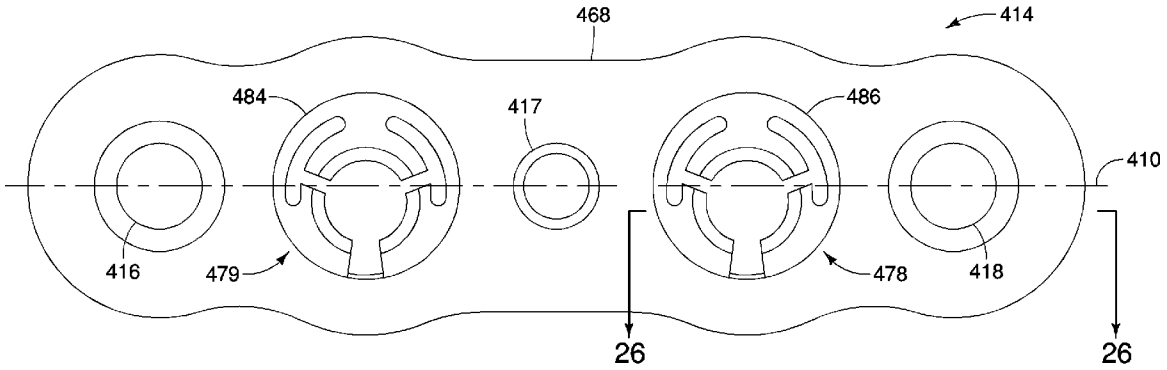

Paragon 28 v. Treace Medical Concepts
IPR2026-00194
Paragon Ex. 1022

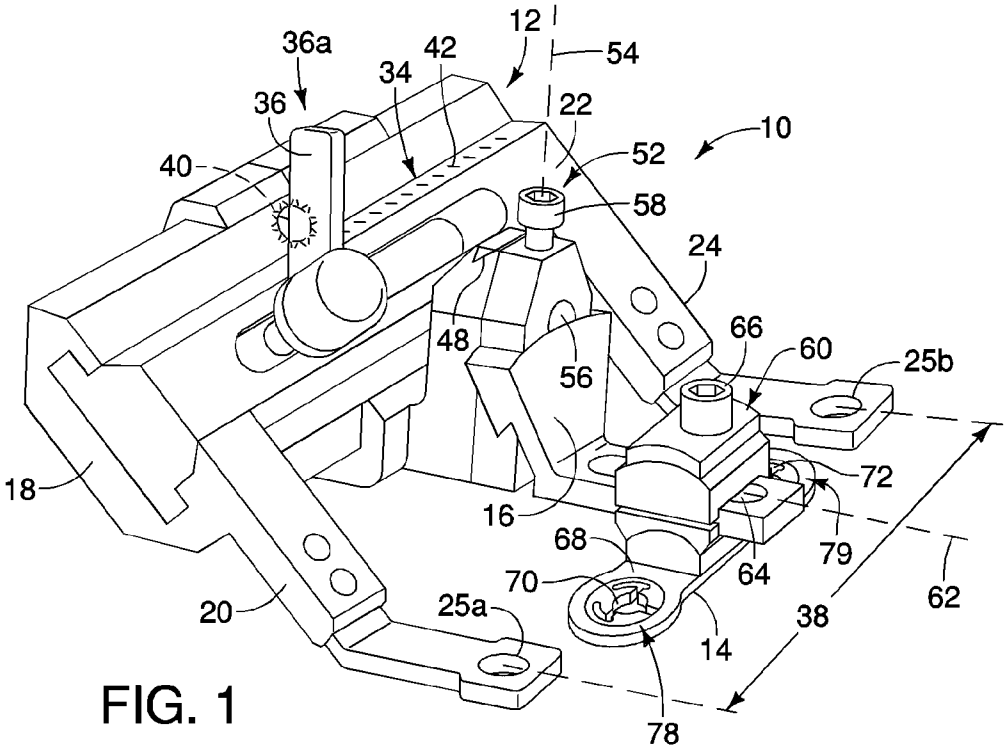
12
54
36a
42
34
36
22
10
40
52
58
24
48
66
60
25b
56
18
72
16
79
68
64
70
62
20
25a
38
14
78

FIG. 1

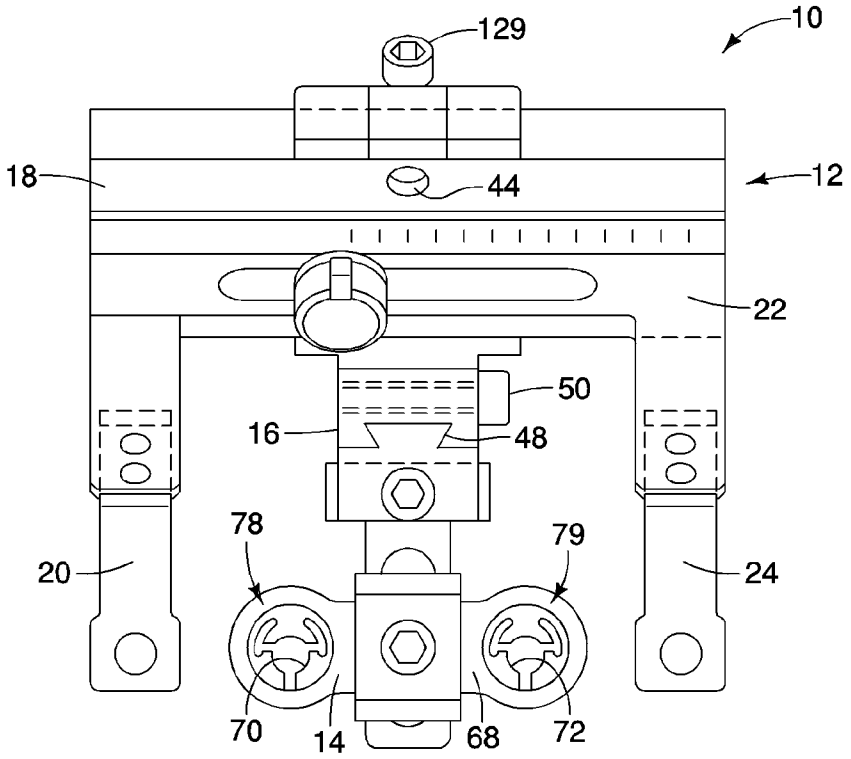
129
10
18
44
12
22
50
16
48
78
79
20
24
70
14
68
72

FIG. 2

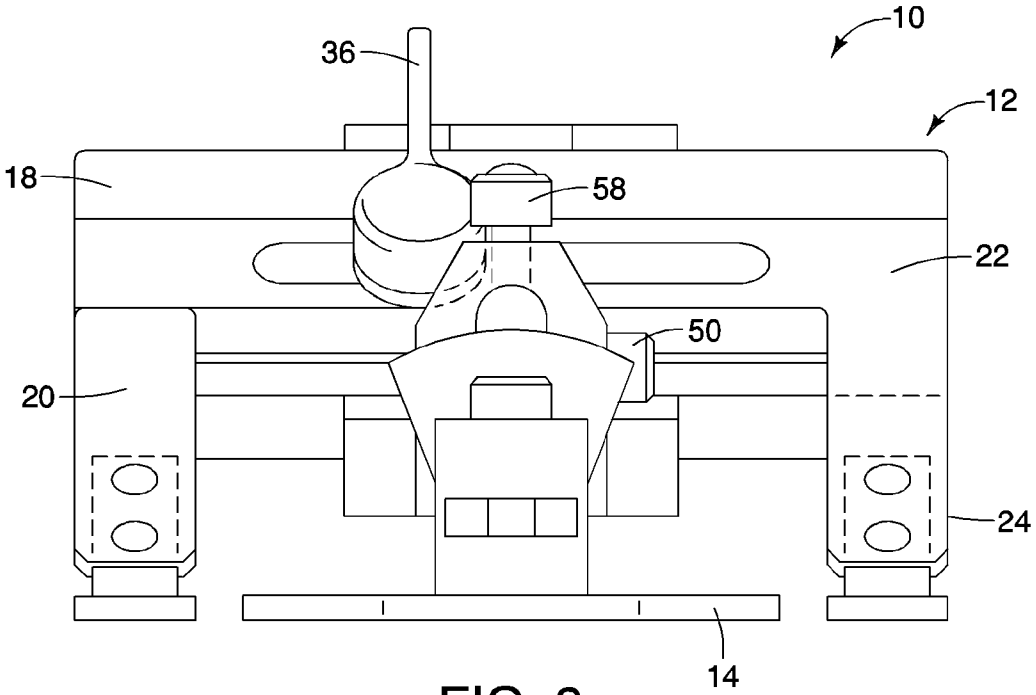

FIG. 3

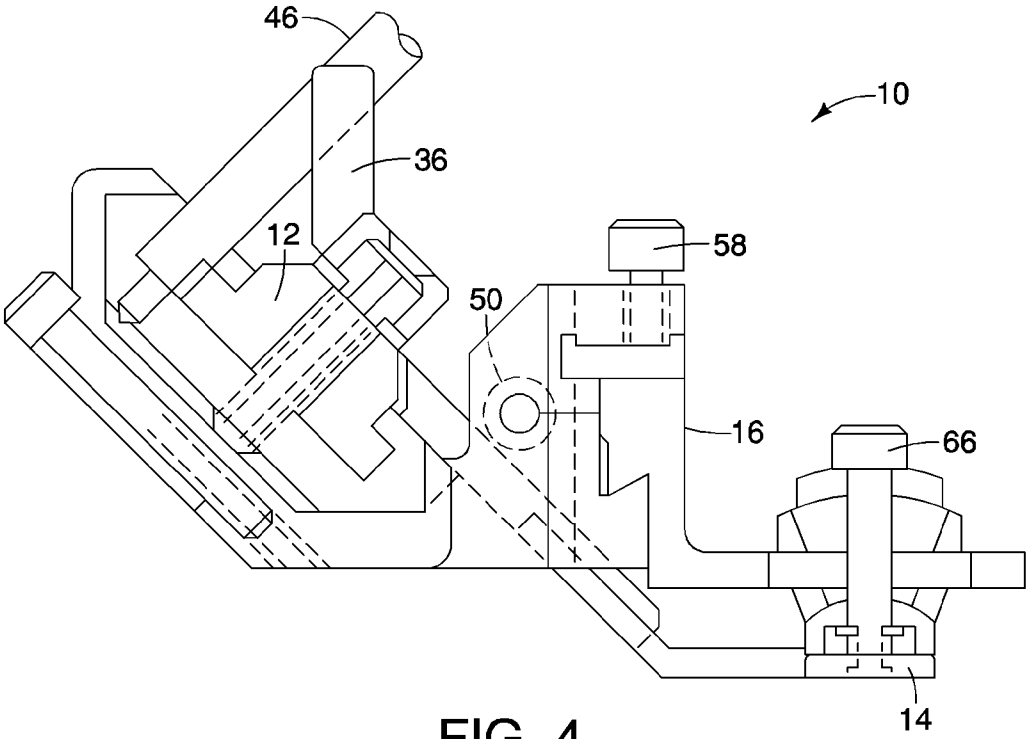

FIG. 4

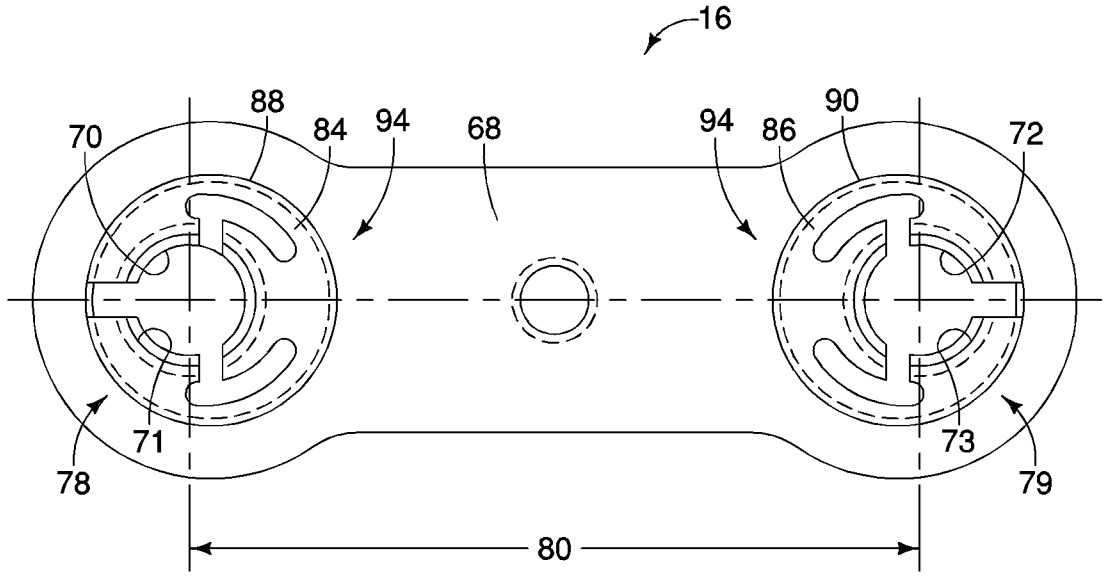
16
88
84
94
68
94
86
90
70
72
71
73
78
79
80

FIG. 5a

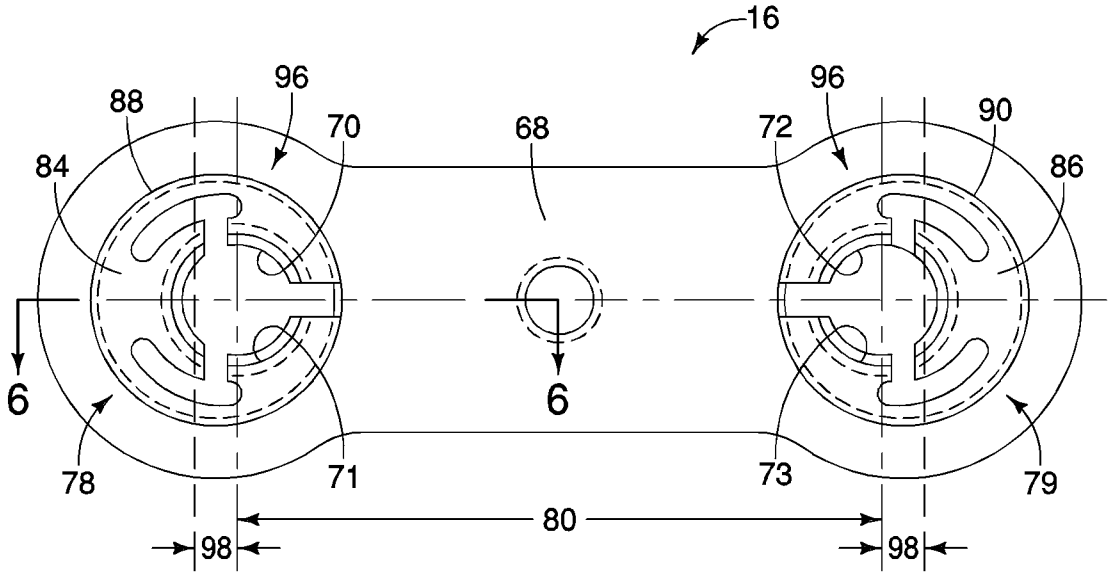
16
96
96
88
70
68
72
90
84
86
6
6
78
71
73
79
80
98
98

FIG. 5b

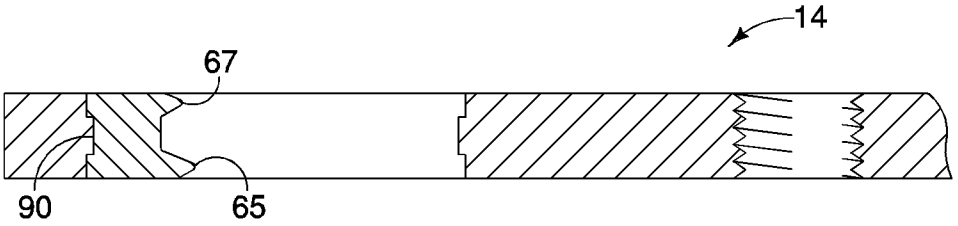
14
67
90
65

FIG. 6

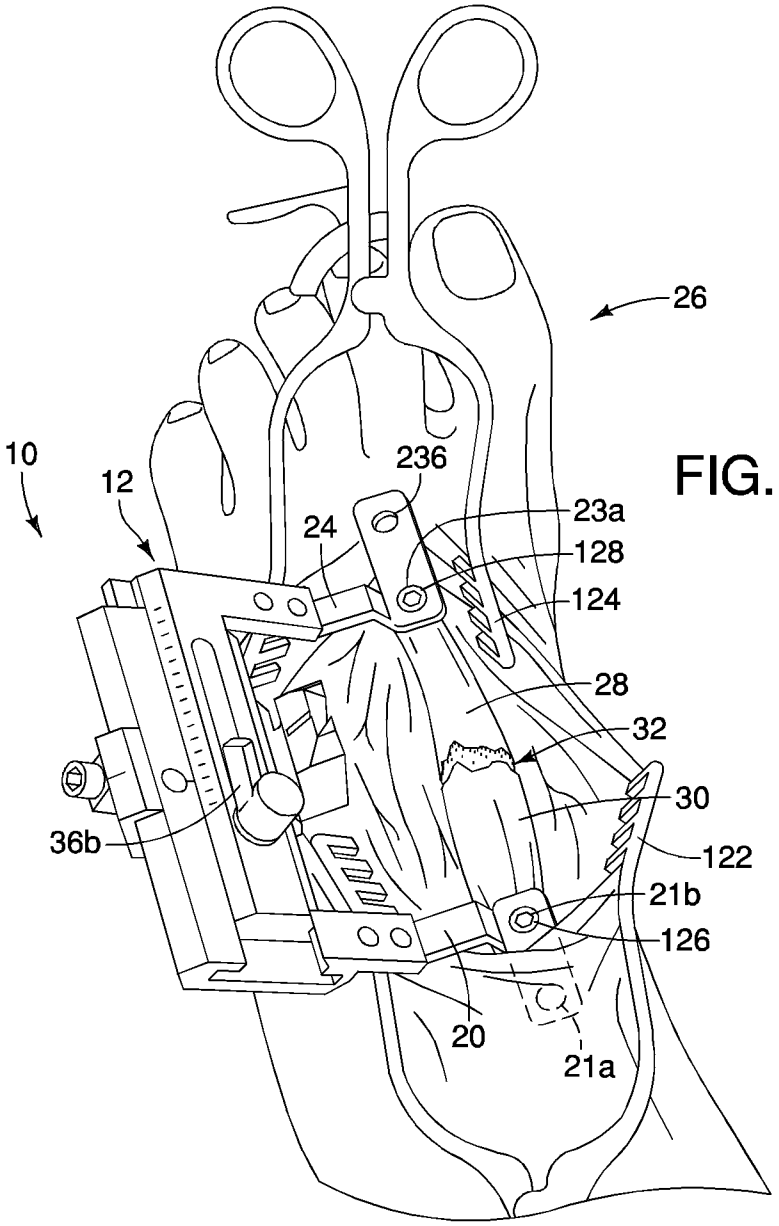
26
10
12
236
24
23a
128
124
28
32
30
122
36b
21b
126
20
21a

FIG. 7

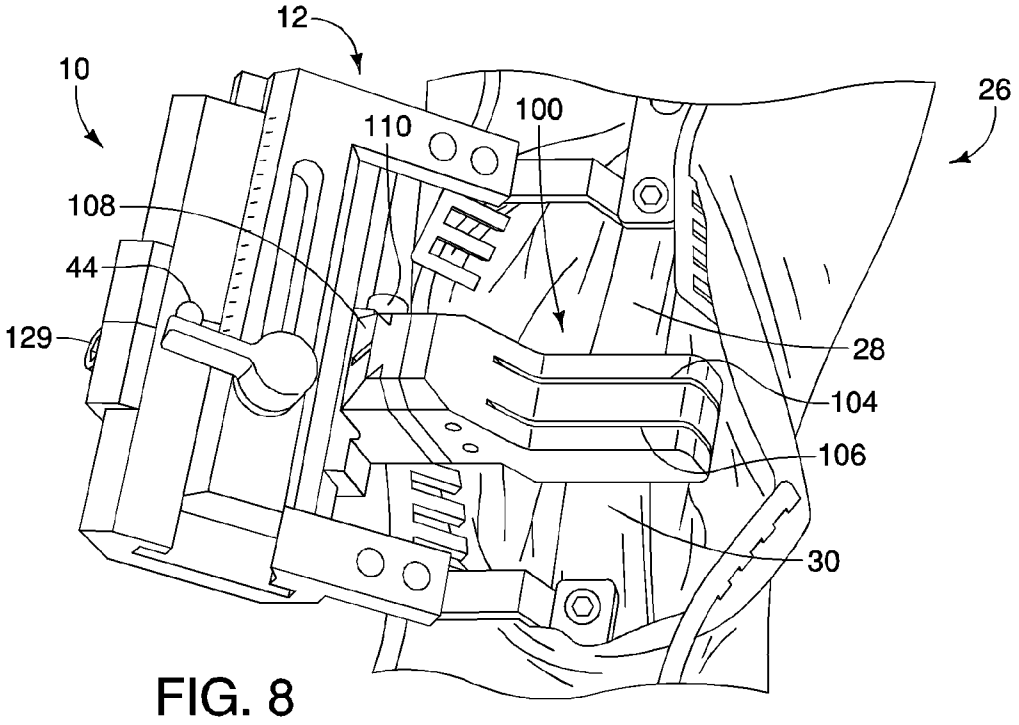
12
10
110
100
26
108
44
129
28
104
106
30

FIG. 8

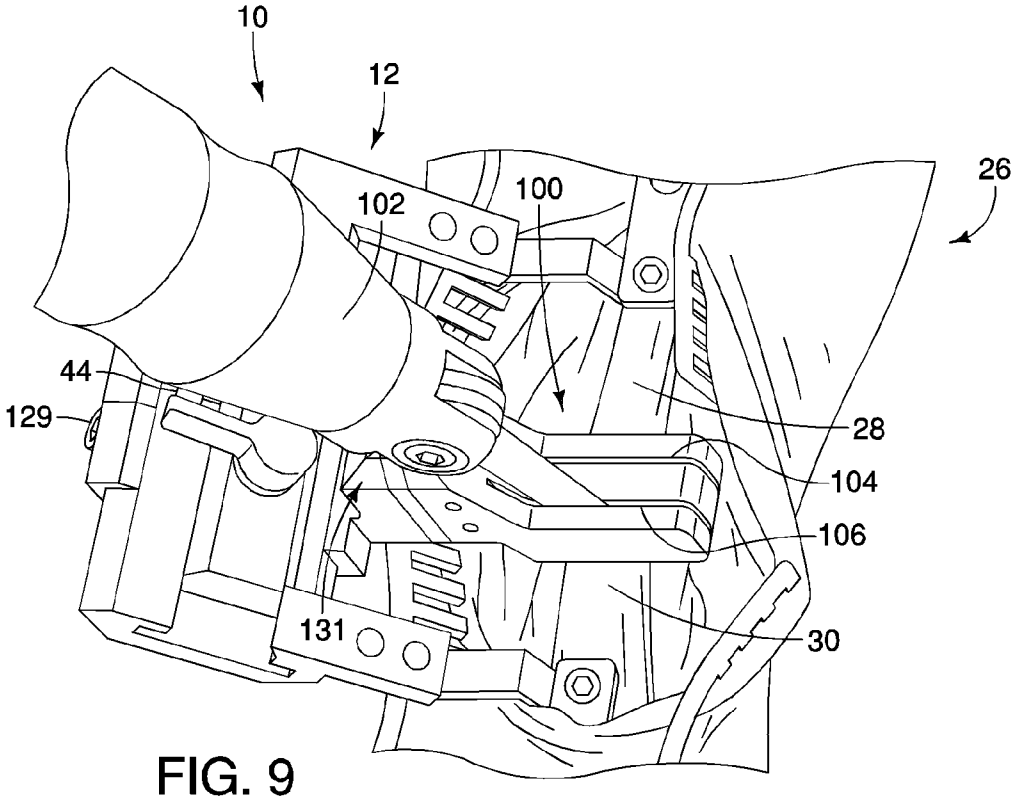
10
12
102
100
26
44
129
28
104
106
131
30

FIG. 9

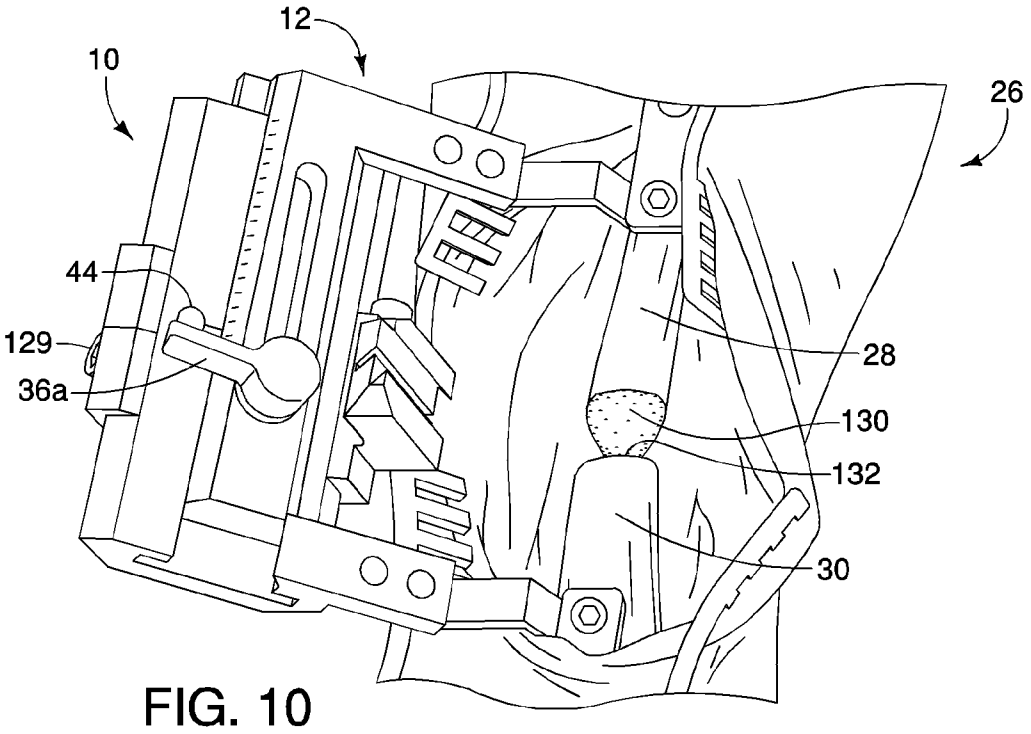

FIG. 10

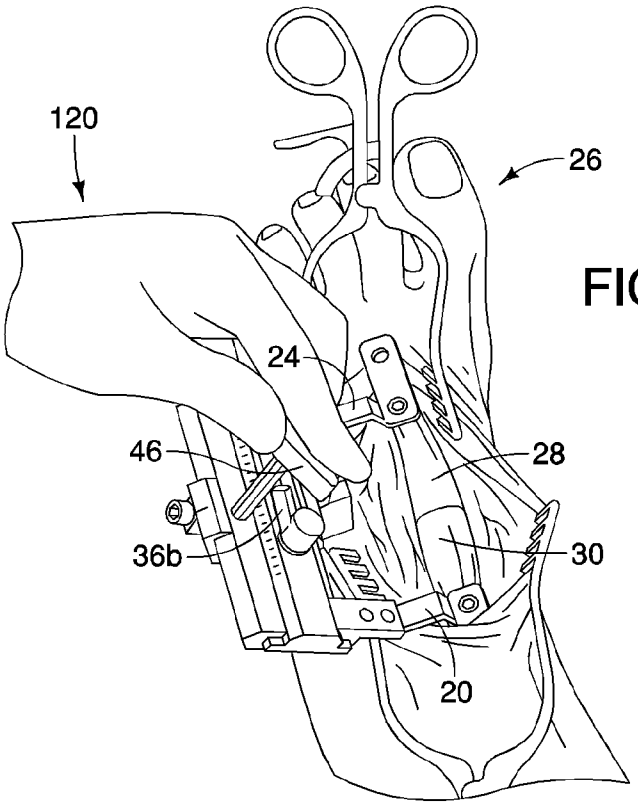

FIG. 11

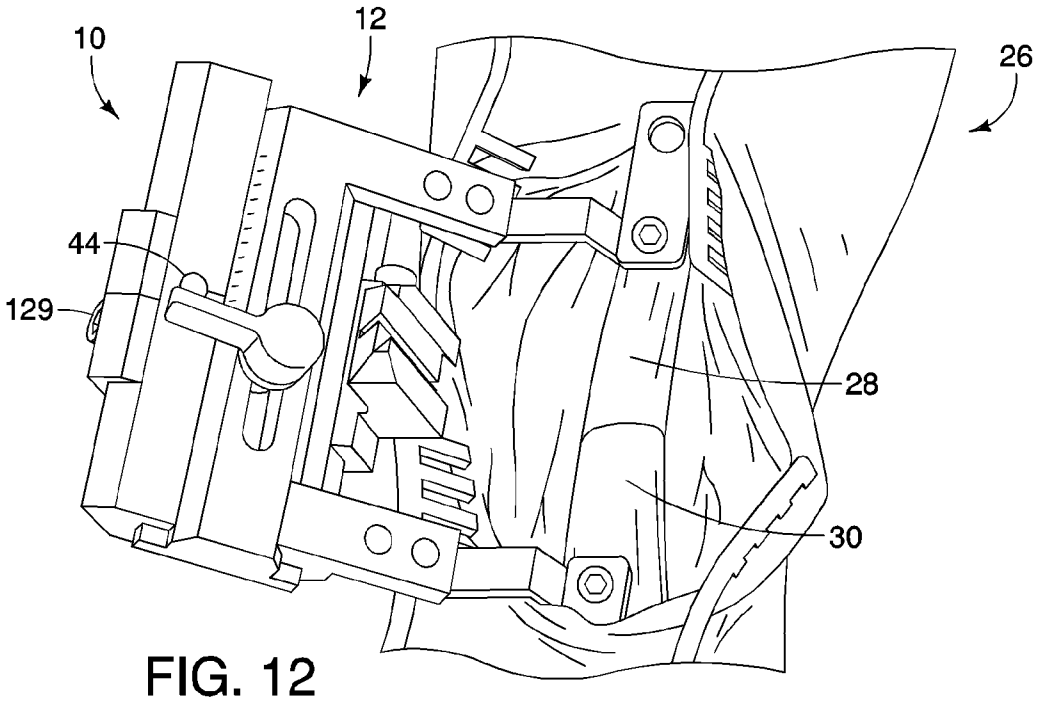

FIG. 12

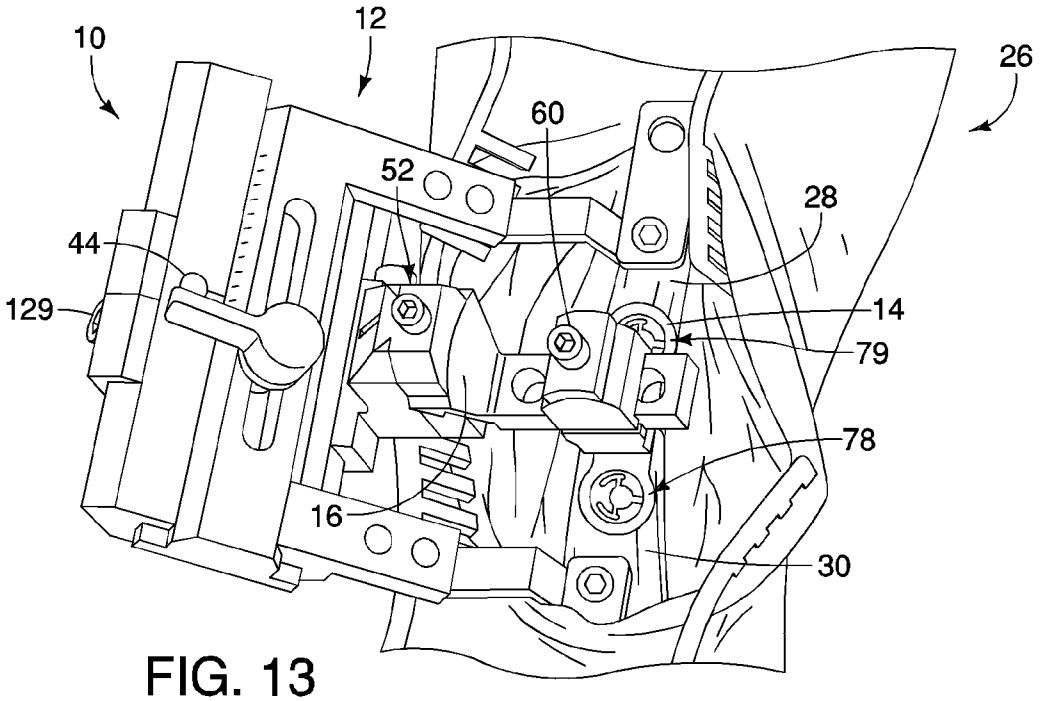

FIG. 13

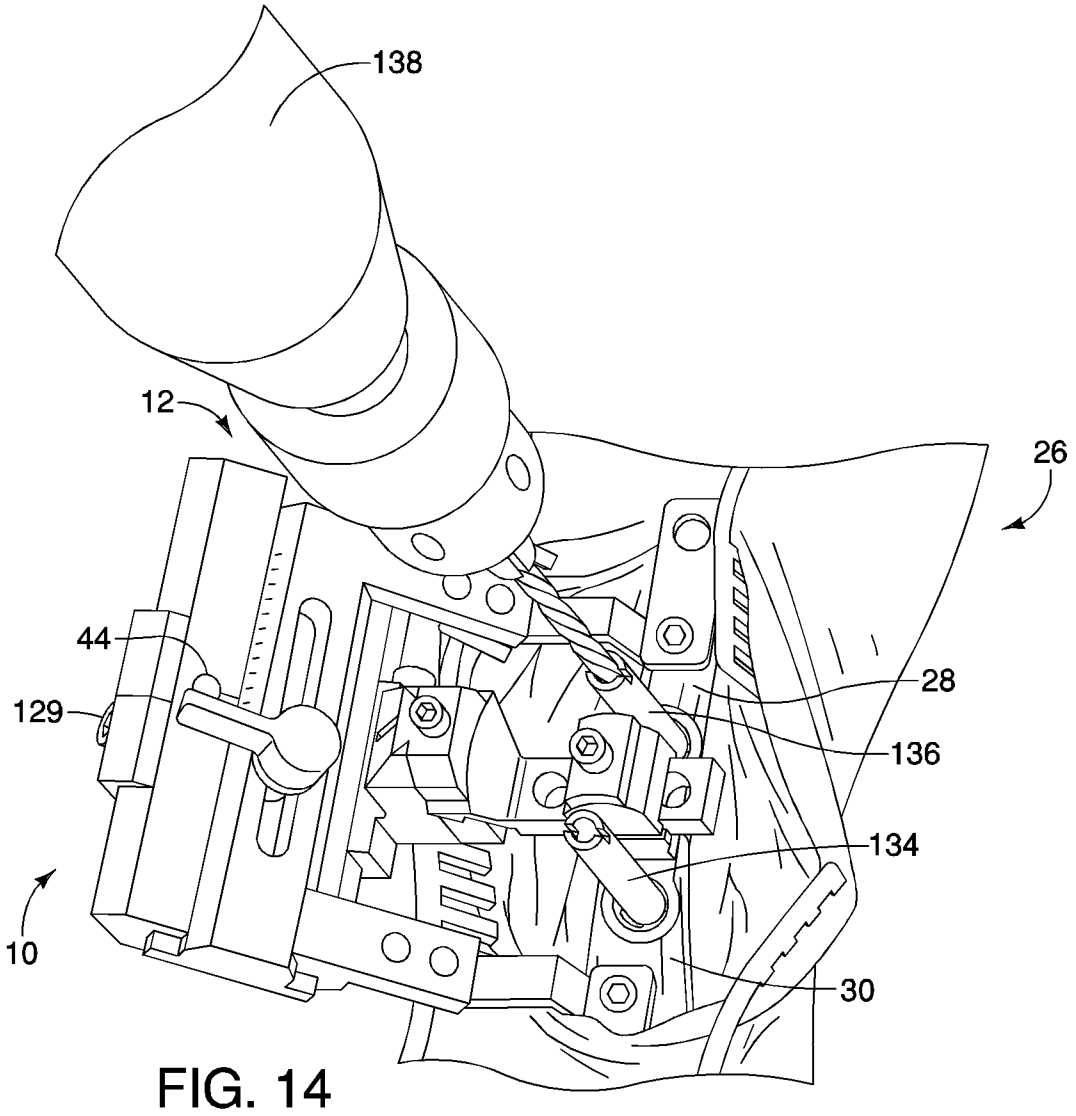

FIG. 14

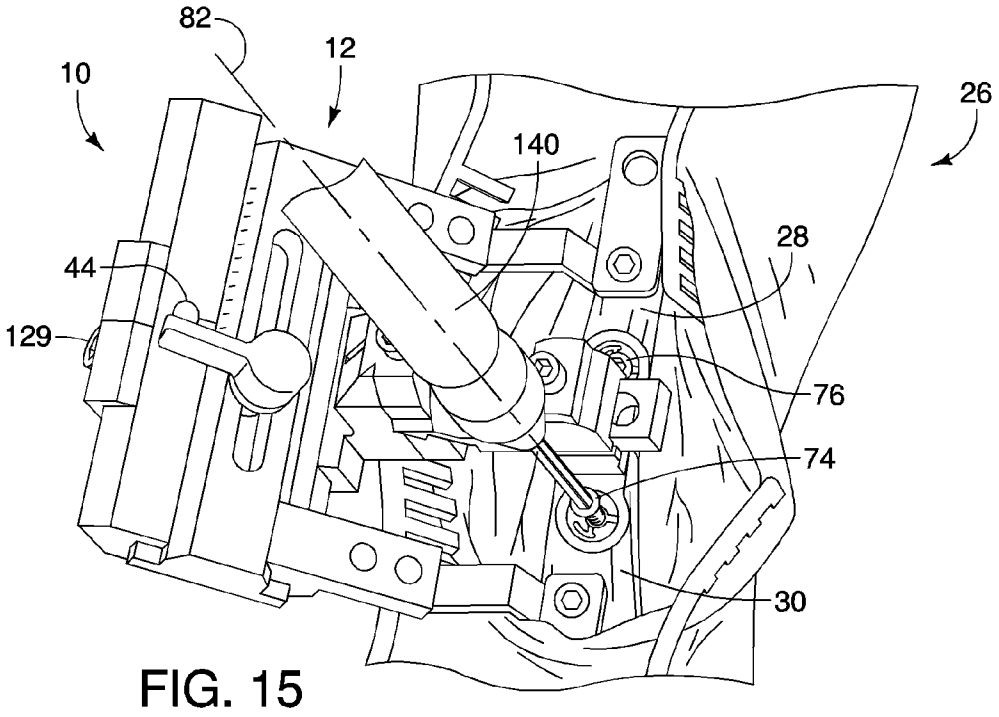

FIG. 15

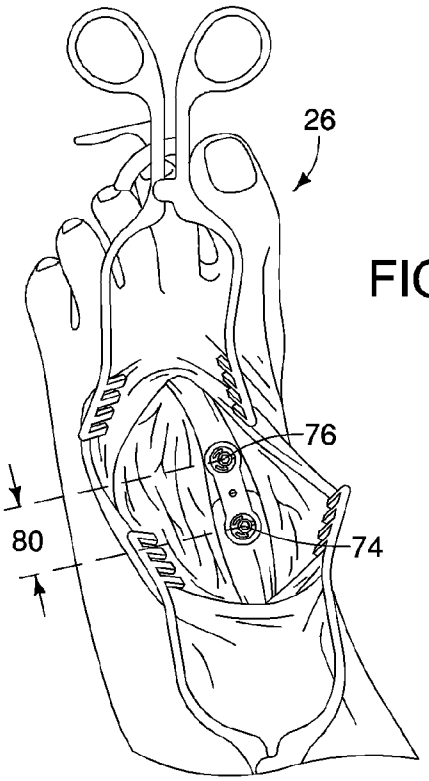

FIG. 16

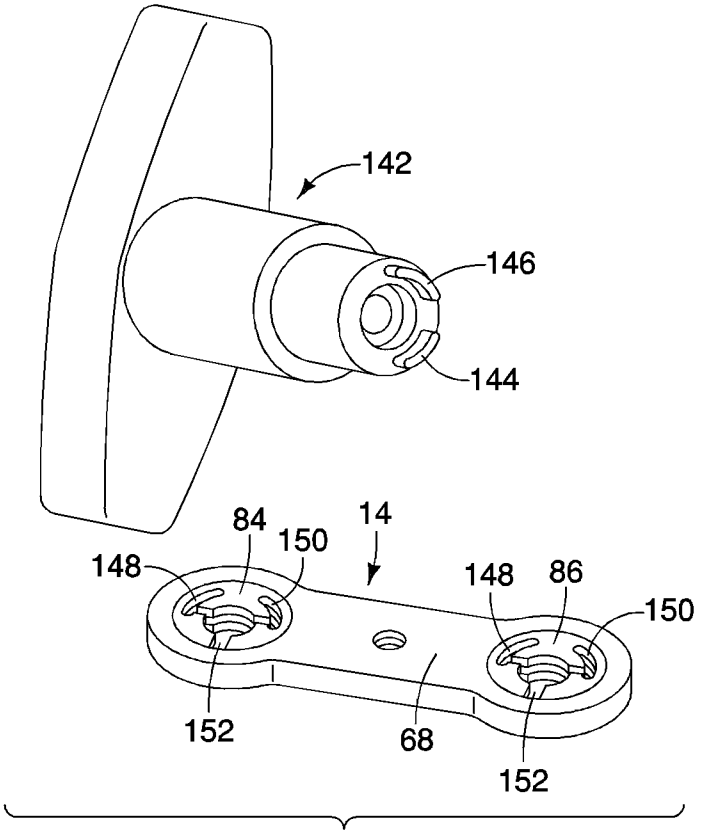

FIG. 17

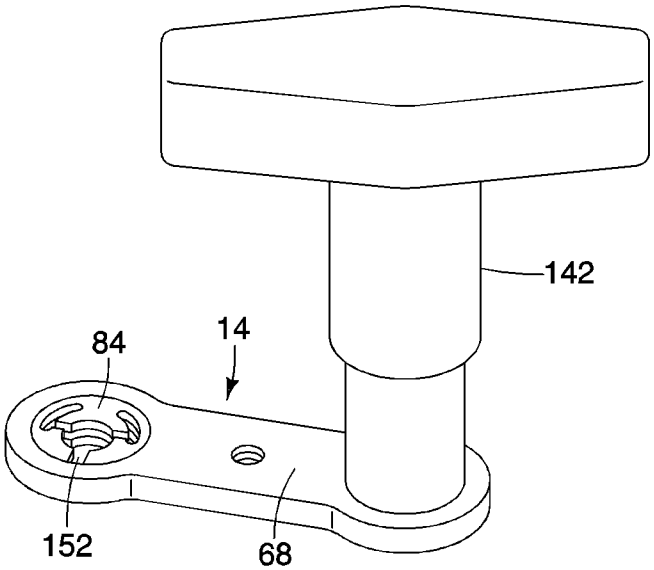

FIG. 18

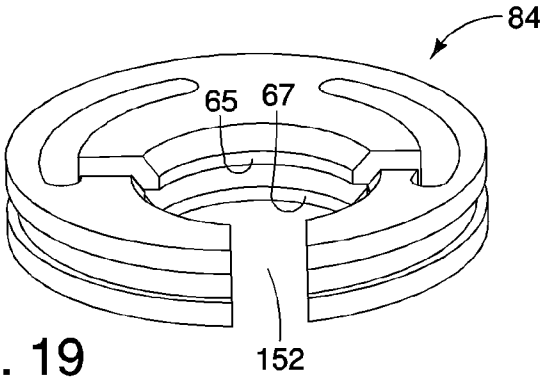

FIG. 19

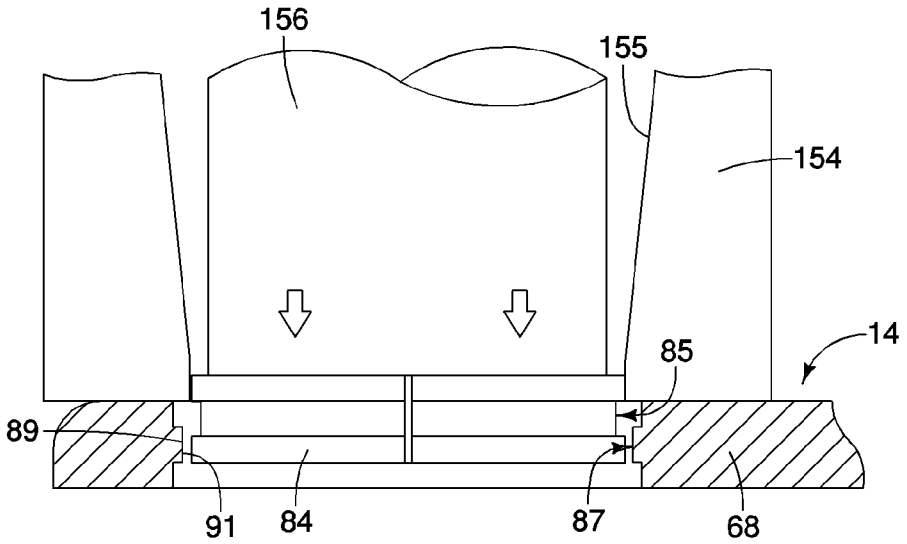

FIG. 20

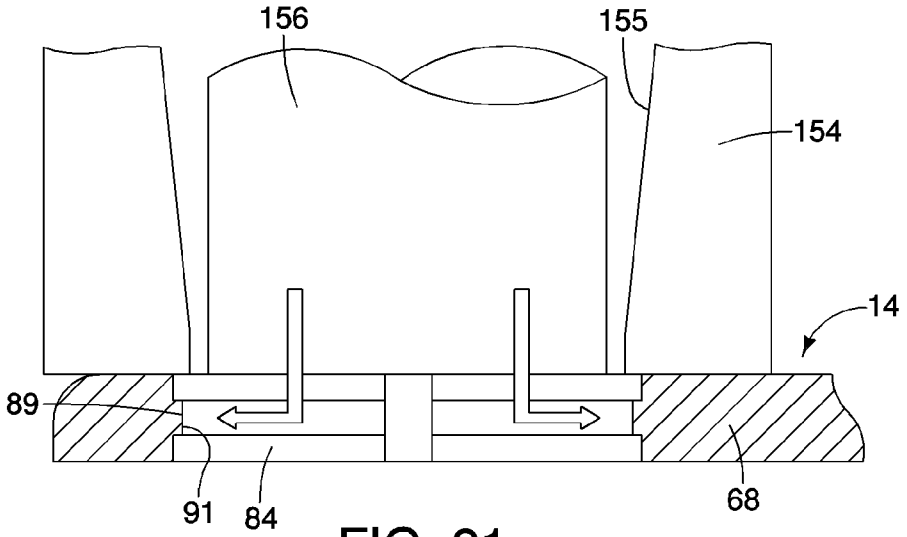

FIG. 21

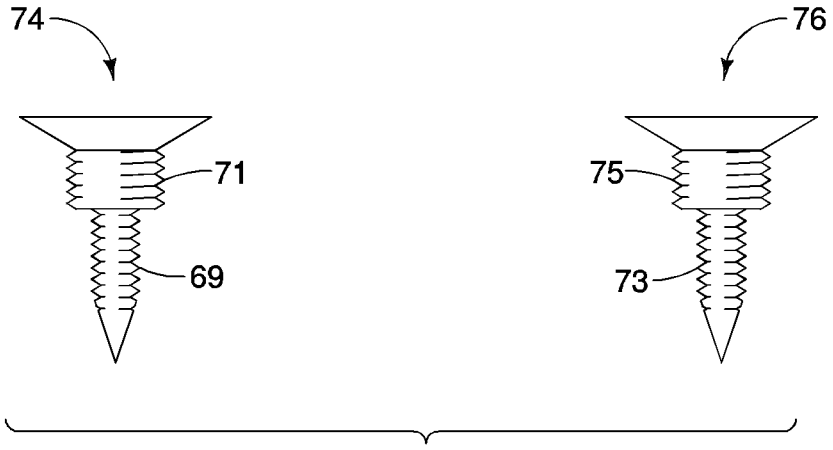

FIG. 22

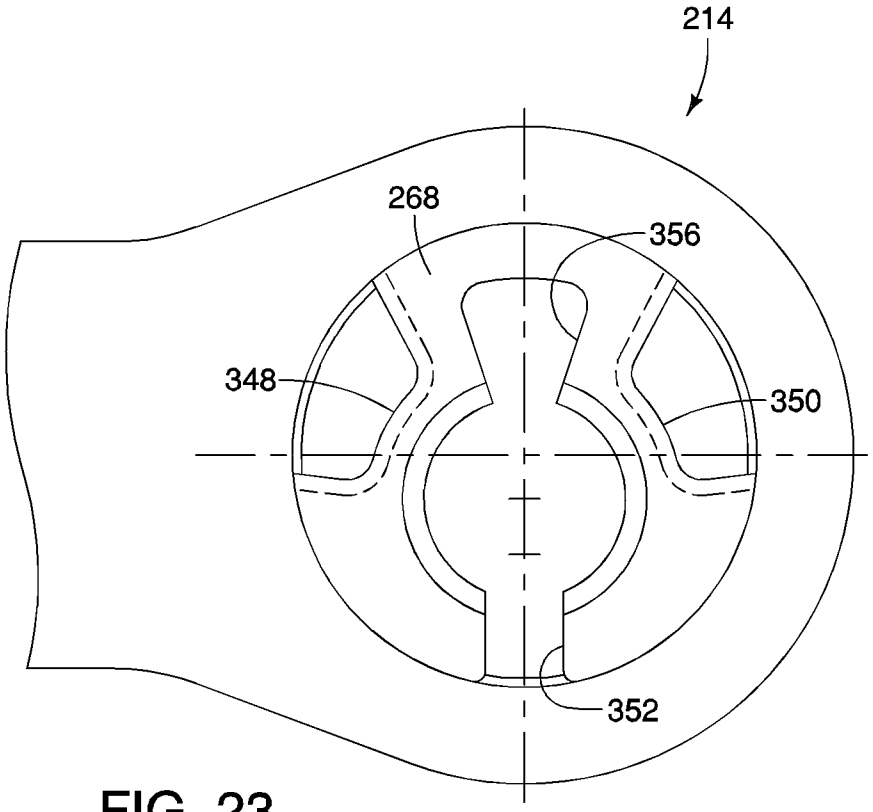

FIG. 23

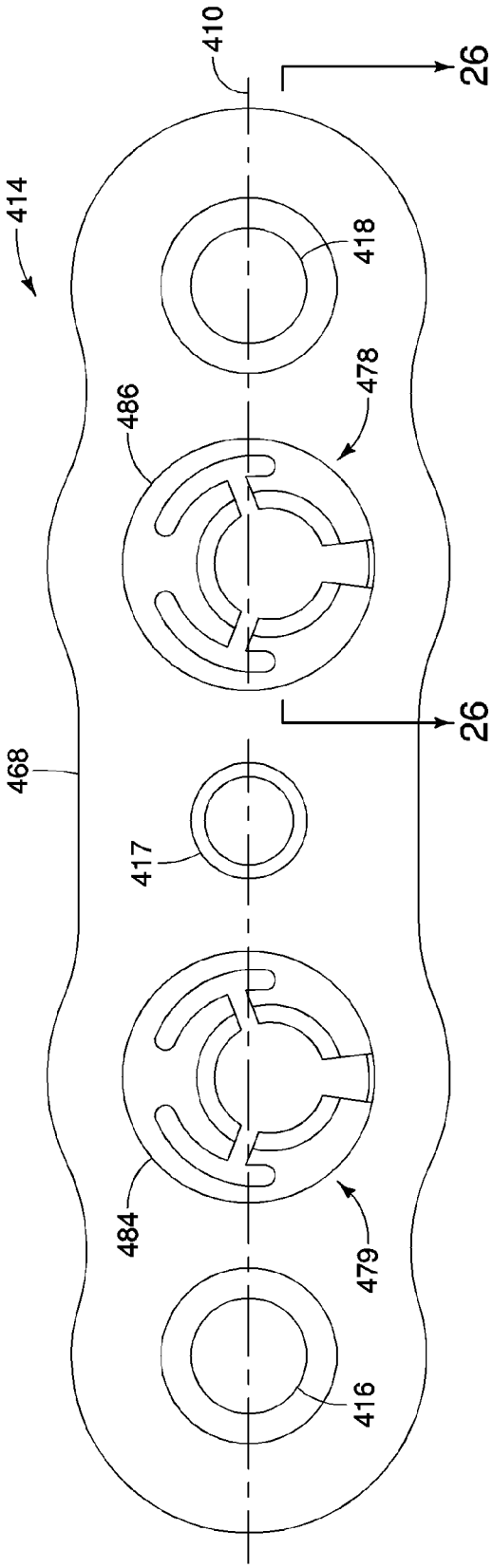

FIG. 24

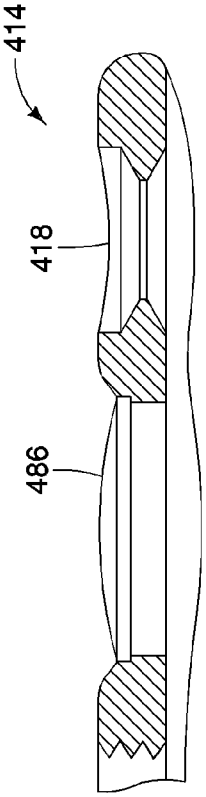

FIG. 26

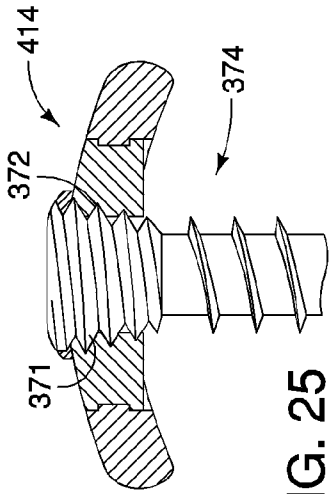

FIG. 25

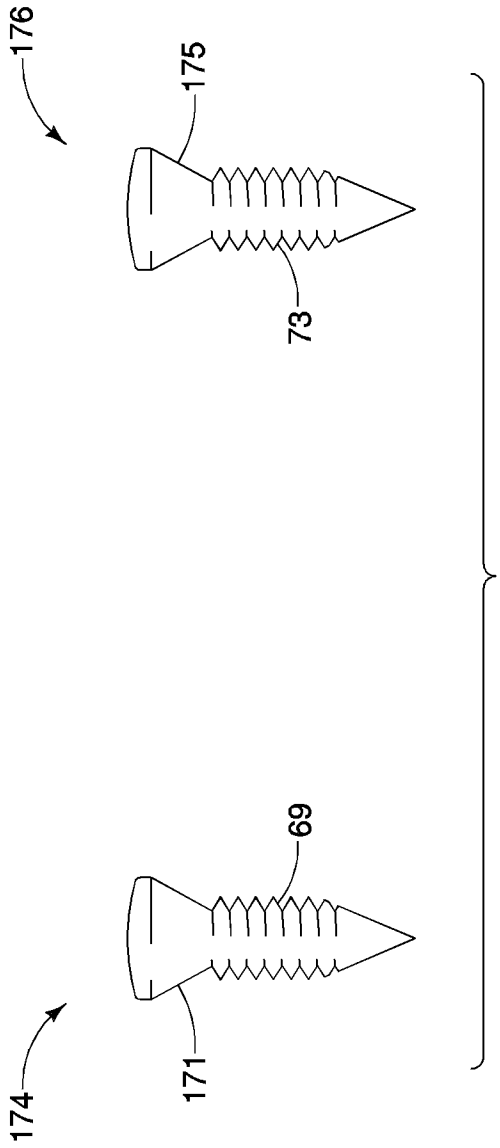

FIG. 27

ORTHOPEDIC PLATE, ORTHOPEDIC DEVICE, METHOD OF COUPLING BONE SEGMENTS, AND METHOD OF ASSEMBLING AN ORTHOPEDIC PLATE

CROSS-REFERENCE TO RELATED APPLICATION

[0001] This patent application claims the benefit under 35 U.S.C. §119(e) of U.S. provisional patent application Ser. No. 61/569,052, filed Dec. 9, 2011 and entitled ORTHOPEDIC PLATE, ORTHOPEDIC DEVICE, METHOD OF COUPLING BONE SEGMENTS, AND METHOD OF ASSEMBLING AN ORTHOPEDIC PLATE, the entire contents of which are incorporated herein by reference.

FIELD

[0002] The present disclosure relates generally to devices for and methods of repairing bones and/or bone joints and methods of assembling said devices. More specifically, the disclosure relates to an orthopedic plate or an orthopedic device for coupling bone segments, a method of doing the same, and a method of assembling an orthopedic plate.

BACKGROUND

[0003] The statements in this section merely provide background information related to the present disclosure and may not constitute prior art.

[0004] When treating bone fractures, where a single bone is broken into two or more bone segments, a medical professional often desires to promote union between the two or more bone segments. The same is the case when a medical professional desires to cause or help to cause bone fusions, i.e., uniting two bones into one bone by eliminating a joint therebetween. When promoting union of two or more bone segments via standard biologic healing, whether the bone segments are pieces of a single bone or whether the bone segments are separate bones, it is often desirable to have precise alignment of bone segments and complete or substantially complete contact between the involved surfaces.

[0005] Alignment of the bone segments is desirable not only to enhance a union of bone segments, but also to prevent or reduce the likelihood of subsequent deformity following union. If malalignment is created at the time of fracture fixation, the ability of the bones to heal may be compromised and, if union is achieved, an alteration in force distribution may occur across formerly precisely balanced joints that may lead to increased contact stresses and subsequent arthritis. Joints often require precise balance to prevent portions of the cartilage from accelerated wear (wearing away the cartilage with repetitive cycles of loading), which may lead to early onset arthritis.

[0006] Thus, under the above-mentioned circumstances, the ability of the medical professional to achieve an outcome that both the patient and clinician approve of is often directly related to the quality of the reduction of the bone segments.

[0007] Traditionally, medical professionals, such as orthopedic surgeons, use plate fixation to hold the various bone segments into the correct position while they heal. The plates themselves are typically primarily alignment devices. While they may provide some element of structural support, if the fracture or fusion does not heal (nonunion), the plate and screw construct often eventually fails due to cyclic loading.

[0008] Dynamic compression plates have been used by medical professionals to attempt to promote biologic healing by creating a more complete and flush bond between bone segments. One type of dynamic compression plate includes oblong, rather than circular, holes to allow the medical professional to compress the fracture/fusion site by placing the screw against the side of the hole that is farthest from the fracture/fusion site. This type of compression plate is utilized with fasteners, such as screws, having a cone-shaped head with its largest diameter at the top of the fastener head. As the medical professional tightens the screw against the plate, the screw head engages the far end of the plate screw hole. Then, as the medical professional continues to tighten the fastener, the cone-shaped fastener head pushes the plate in a direction away from the fracture/fusion site as long as two conditions are met: (1) the bottom side of the plate is in contact with the bone to prevent the plate from moving downward as the fastener moves downward, and (2) the other end of the plate is secured to the bone on the opposite side of the fracture/fusion site.

[0009] The first of the above-mentioned conditions, namely that the bottom side of the plate is in contact with the bone while the fastener is being driven downward into the bone, may diminish the plate's effectiveness or render the plate unusable with bones that are not relatively flat. For example, as the medical professional tightens a fastener and causes the plate to contact an uneven bone surface, the bone may become distorted or otherwise damaged. Distortion of the fracture or fusion site may alter the alignment of said site or may limit the contact surface area between the bone segments. In either case, the desired goal of anatomic restoration of the bone or fusion site with maximal surface area available for healing may not be achieved. As a result, this type of dynamic compression plate may be undesirable for use with curved or uneven bone surfaces.

[0010] This type of dynamic compression plate may also be undesirable because the amount of compression is dependent on the screw height. In other words, the position of the plate along a first axis is dependent on the position of the fastener along a second axis that is generally perpendicular to the first axis. The dependent relationship between the plate and the screw height may not be desirable because it may prevent the medical professional from creating a desired compression force acting on the bone segments while the fasteners are at their desired positions.

[0011] Therefore, it is desirous to provide an orthopedic plate, device, or method that can be used with bone segments having various shapes while allowing dynamic compression of multiple bone segments and/or that can be used to create a desired compression force acting on the bone segments while the fasteners are at their desired positions.

SUMMARY

[0012] In overcoming the limitations and drawbacks of the prior art, the present orthopedic plate, device, and methods facilitate and/or provide dynamic compression between multiple bone segments.

[0013] In one aspect, an orthopedic plate is provided, comprising a frame portion, and a bearing rotatably coupled with the frame portion, wherein the bearing defines an opening configured to receive a fastener for fastening the orthopedic plate to a body, wherein the bearing includes an outer surface that is eccentric to the opening such that a position of the opening with respect to the frame portion is adjustable as the

bearing rotates, and wherein the bearing includes at least a first ridge that is an anchoring ridge and a second ridge that is a locking ridge.

[0014] The anchoring ridge may have an inner diameter that is smaller than an inner diameter of the locking ridge. Furthermore, the anchoring ridge may be configured to mate with a first set of fastener threads and the locking ridge is configured to mate with a second set of fastener threads. The bearing may be configured to expand in diameter when the second set of fastener threads is received within the locking ridge.

[0015] The anchoring ridge may be configured to mate with a first set of fastener threads and the locking ridge is configured to receive a locking head. The bearing may be configured to expand in diameter when the locking head is received within the locking ridge.

[0016] The orthopedic plate may also include a second bearing rotatably coupled with the frame portion, wherein the second bearing defines a second opening configured to receive a second fastener for further fastening the orthopedic plate to a body, wherein the second bearing includes an outer surface that is eccentric to the second opening.

[0017] In another aspect an orthopedic plate is provided, having a frame portion and a bearing rotatably coupled with the frame portion, wherein the bearing defines an opening configured to receive a fastener for fastening the orthopedic plate to a body, wherein the bearing includes an outer surface that is eccentric to the opening such that a position of the opening with respect to the frame portion is adjustable as the bearing rotates and wherein the bearing includes at least one key hole to facilitate rotation of the bearing with respect to the frame portion.

[0018] The bearing may include at least two key holes to facilitate rotation of the bearing with respect to the frame portion. The bearing may also be configured to facilitate rotation of the bearing with respect to the frame portion while the fastener is received within the opening.

[0019] In yet another aspect, an orthopedic device is provided, configured to facilitate cutting at least one of first and second bone segments of a body and comprising a jig configured to be secured to the first and second bone segments of the body and a cutting guide coupled with the jig, wherein a position of the cutting guide with respect to the jig is adjustable along a first axis.

[0020] In another aspect, an orthopedic device is configured to facilitate coupling first and second bone segments of a body and comprising a jig having a first arm configured to be secured to the first bone segment, a second arm configured to be secured to the second bone segment, and a jig adjustment mechanism configured to adjust the position of the first arm with respect to the second arm to adjust a distance between the first and second bone segments.

[0021] In yet another aspect, a method of coupling first and second bone segments of a body is provided, comprising coupling a first arm of a jig with the first bone segment and coupling a second arm of the jig with the second bone segment, coupling a cutting guide with the jig to facilitate cutting at least one of the first and second bone segments, cutting at least one of the first and second bone segments, decoupling the cutting guide from the jig, coupling a plate holding mechanism with the jig, coupling an orthopedic plate with the plate holding mechanism, adjusting the plate holding mechanism so as to move the orthopedic plate into a desired position with respect to the first and second bone segments, securing a first portion of the orthopedic plate to the first bone segment and securing a second portion of the orthopedic plate to the second bone segment, adjusting at least one of the following: a position of at least one of the first and second arms of the jig so as to adjust a distance between the first and second bone segments and a plate adjusting mechanism to adjust a distance between the first and second bone segments.

[0022] Further objects, features and advantages of the orthopedic plate, device, and method will become readily apparent to persons skilled in the art after a review of the following description, with reference to the drawings and claims that are appended to and form a part of this specification.

[0023] Further areas of applicability will become apparent from the description provided herein. It should be understood that the description and specific examples are intended for purposes of illustration only and are not intended to limit the scope of the present disclosure.

DRAWINGS

[0024] In order that the disclosure may be well understood, there will now be described various forms thereof, given by way of example, reference being made to the accompanying drawings, in which:

[0025] FIG. **1** shows an isometric view of an orthopedic device embodying principles of the present invention and having a jig with first and second arms and an orthopedic plate;

[0026] FIG. **2** is a top view of the orthopedic device shown in FIG. **1**;

[0027] FIG. **3** is a front view of the orthopedic device shown in FIG. **1**;

[0028] FIG. **4** is a side view of the orthopedic device shown in FIG. **1**;

[0029] FIG. **5***a* is a top view of the orthopedic plate shown in FIG. **1** where first and second bearings of the orthopedic plate are each in a non-compressed position;

[0030] FIG. **5***b* is a top view of the orthopedic plate shown in FIG. **1** where the first and second bearings of the orthopedic plate are each in a compressed position;

[0031] FIG. **6** is a cross-sectional view of the orthopedic plate shown in FIG. **5***b* taken along line **6-6**;

[0032] FIG. **7** is an isometric view of an alternative embodiment of an orthopedic device coupled with first and second bone segments of a patient's body;

[0033] FIG. **8** shows the orthopedic device shown in FIG. **7**, further including a cutting guide coupled with the jig;

[0034] FIG. **9** shows the orthopedic device shown in FIG. **7**, further including a surgical saw received within a slot of the cutting guide;

[0035] FIG. **10** shows the orthopedic device shown in FIG. **7**, where portions of the first and second bone segments have been removed to form complimentary bonding surfaces;

[0036] FIG. **11** shows the orthopedic device shown in FIG. **7**, where a medical professional is adjusting the position of the jig first arm with respect to the jig second arm, thereby adjusting the position of the first bone segment with respect to the second bone segment;

[0037] FIG. **12** shows the orthopedic device shown in FIG. **7**, where the medical professional has adjusted the position of the jig first arm with respect to the jig second arm such that the first and second bone segments are abutting each other;

[0038] FIG. **13** shows the orthopedic device shown in FIG. **7** coupled with a plate holding mechanism, where the plate

holding mechanism is configured to position an orthopedic plate with respect to the first and second bone segments;

[0039] FIG. **14** shows the orthopedic device shown in FIG. **7**, further including drill guides coupled with the orthopedic plate and where the medical professional is drilling along the drill guides and into the first and second bone segments;

[0040] FIG. **15** shows the orthopedic device shown in FIG. **7**, where a medical professional is securing the orthopedic plate to the first and second bone segments;

[0041] FIG. **16** shows the orthopedic plate shown in FIG. **15**, where the jig and orthopedic plate holding mechanism have been decoupled from the orthopedic plate;

[0042] FIG. **17** shows an isometric view of the orthopedic plate shown in FIG. **15** and a plate adjustment mechanism configured to mate with the orthopedic plate and adjust the position of bearings therein;

[0043] FIG. **18** shows an isometric view of the orthopedic plate and plate adjustment mechanism shown in FIG. **17**, where the orthopedic plate and plate adjustment mechanism are mated with each other;

[0044] FIG. **19** shows an isometric view of the underside of the bearing for the orthopedic plate shown in FIG. **17**;

[0045] FIG. **20** shows the bearing being coupled with the orthopedic plate frame;

[0046] FIG. **21** shows the bearing coupled with the orthopedic plate frame;

[0047] FIG. **22** shows a fastener configured to couple an orthopedic plate to one or more bone segments, wherein the fastener includes first and second threads;

[0048] FIG. **23** shows an alternative embodiment of an orthopedic plate embodying principles of the present invention;

[0049] FIG. **24** is another alternative embodiment of an orthopedic plate embodying principles of the present invention;

[0050] FIG. **25** is a fastener coupled with the orthopedic plate shown in FIG. **24**;

[0051] FIG. **26** is a cross-sectional view of the orthopedic plate shown in FIG. **24** taken along line **26-26**; and

[0052] FIG. **27** is an alternative embodiment of a fastener configured to couple an orthopedic plate to one or more bone segments.

[0053] The drawings described herein are for illustration purposes only and are not intended to limit the scope of the present disclosure in any way.

DETAILED DESCRIPTION

[0054] The following description is merely exemplary in nature and is not intended to limit the present disclosure, application, or uses.

[0055] Referring now to the drawings, FIG. **1** shows an orthopedic device **10** for coupling bone segments of a patient's body. The orthopedic device **10** includes a jig **12**, an orthopedic plate **14**, and a plate holding mechanism **16**. Although these components are shown being used with each other, many or all of the components may be used independently of each other. For example, a medical professional may choose to use the orthopedic plate **14** without using the jig **12** or may choose to use the jig **12** with another orthopedic plate or another device altogether.

[0056] The jig **12** shown in the figures is coupled with the patient's body to facilitate installation of the orthopedic plate **14**. The jig **12** shown in the figures includes a first portion **18** having a first arm **20** that is able to be coupled with the patient's body and a second portion **22** having a second arm **24** that is also able to be coupled with the patient's body.

[0057] For example, FIG. **7** shows a patient's body **26**, particularly a patient's foot, having a first bone segment **28** and a second bone segment **30** that have been separated via a fracture **32**. In the embodiment of the jig **12** shown in FIG. **7**, the first and second arms **20**, **24** each have two fastener holes **21***a*, **21***b*, **23***a*, **23***b* that may be used to secure the jig **12** to the bone segments, whereas the first and second arms **20**, **24** of the jig **12** shown in FIG. **1** each include one fastener hole **25***a*, **25***b*. Although the figures focus on the foot portion of the patient's body **26**, the present invention may be used with any suitable portion of a patient's body, such as the hands, ankles, wrists, legs, arms, oral or maxillofacial areas, or any other portion of a patient's body. The patient shown in the drawings is human, but the devices and methods disclosed herein may also be used on animals, such as through veterinarian medicine, and thus the term "medical professional" includes all types of medicine, including veterinarian medicine.

[0058] Referring to FIG. **7-16**, although these figures show first and second bone segments **28**, **30** of a metatarsal bone that have been separated via a fracture **32**, the present invention may be used with any suitable injury, condition, disease, malady, or weakness to a patient's body, such as a fracture, fusion, crack, or damaged joint. The term "bone segments" may refer to two portions of a single bone or two different bones. The metatarsal bone shown in the figures is, for illustrative purposes, longer and extends more proximal than a typical metatarsal bone in a normal adult patient. Also, for illustrative purposes, other bones of the patient's foot are not shown. If the jig **12** was used for a fusion application, rather than a fracture, in a similar area of a patient's foot, then the first and second arms of the jig likely would be secured to a metatarsal distally and a cuneiform proximally. However, as discussed above, the orthopedic device **10** may be used with any suitable bone segments.

[0059] Referring to FIGS. **1-4**, the second portion **22** of the jig **12** is slidably received within the first portion **18** so that the respective portions **18**, **22** are movable with respect to each other. The first and second portions **18**, **22** shown in the figures further include a jig adjustment mechanism **34** and a locking key **36** for adjusting a distance **38** between the first arm **20** and the second arm **24** of the jig **12**. The locking key includes a locked position **36***a* (FIGS. **1-4**, **8-10**, **12-15**), in which the first and second portions **18**, **22** of the jig **12** are movable with respect to each other, and an unlocked position **36***b* (FIGS. **7** and **11**), in which the first and second portions **18**, **22** of the jig **12** are not movable with respect to each other. The jig **12** shown in the figures also includes a gear **40** and track **42**, such as a rack and pinion, that cooperate to define the jig adjustment mechanism **34**, but any other suitable adjustment mechanism may be used. The gear **40** in the figures is located within a cavity defined by the jig first portion **18** and is accessible from outside the jig **12** via a key hole **44** in the jig **12**. The orthopedic device **10** further includes an adjustment key **46** (FIGS. **4**, **11**) configured to be inserted into the key hole **44** (FIGS. **2**, **8-10**) and rotate the gear **40**, thereby adjusting the distance **38** between the first and second arms **20**, **24**. When the jig **12** is coupled with the first and second bone segments **28**, **30**, by turning the adjustment key **46**, a medical professional is able to adjust the relative position of the first and second bone segments **28**, **30** with respect to each other. As a result, a medical professional is able to use the jig **12** to cause the first and second bone segments to dynamically

compress, or cause the bone segments **28**, **30** to come into contact with each other, and potentially promote biological healing.

[0060] As best shown in FIGS. **1** and **2**, the plate holding mechanism **16** is coupled to the jig **12** via a tab-slot connection **48** and securing pin **50** (FIG. **2**) which secures the tab-slot connection **48**. The plate holding mechanism **16** further includes a vertical adjustment mechanism **52** configured to adjust the position of the orthopedic plate **14** along a y-axis **54** (FIG. **1**). For example, the vertical adjustment mechanism **52** shown in the figures includes a tab-slot connection **56** and securing pin **58** securing the tab-slot connection **56** (FIG. **1**). The plate holding mechanism **16** further includes a horizontal adjustment mechanism **60** configured to adjust the position of the orthopedic plate **14** along an x-axis **62** (FIG. **1**). For example, the horizontal adjustment mechanism **60** shown in the figures includes a tab-slot connection **64** and securing pin **66** securing the tab-slot connection **64** (FIG. **1**). By using the vertical adjustment mechanism **52** and the horizontal adjustment mechanism **60**, a medical professional is able to adjust the position of the orthopedic plate **14** with respect to the first and second bone segments **28**, **30** so as to properly align the orthopedic plate **14** before coupling it with the bone segments **28**, **30**. In an alternative embodiment, the vertical adjustment mechanism and the horizontal adjustment mechanism include gear and track mechanisms such as the rack and pinion mechanism discussed with respect to the jig adjustment mechanism **34**.

[0061] As is best shown in FIGS. **5***a* and **5***b*, the orthopedic plate **14** includes a frame portion **68** and first and second plate adjustment mechanisms **78**, **79** that are each configured to adjust a distance **80** (FIG. **16**) between first and second fasteners **74**, **76** (FIGS. **15**, **16**), respectively. The plate adjustment mechanisms **78**, **79** shown in the figures include a first bearing **84** that is rotatable with respect to the frame portion **68** and a second bearing **86** that is rotatable with respect to the frame portion **68**.

[0062] The orthopedic plate **14** shown in the figures defines a first opening **70** and a second opening **72** that are configured to receive the first and second fasteners **74**, **76**, to couple the orthopedic plate **14** to the first and second bone segments **28**, **30**. The distance **80** is measured at the center of each of the fasteners **74**, **76** and is therefore, in the embodiments shown in the figures, the same distance as that measured from the respective centers of each of the openings **70**, **72** (FIGS. **5***a*, **5***b*).

[0063] As best shown in FIGS. **5***a*, **5***b*, and **6**, the first and second bearings **84**, **86** each include two annular ridges: a anchoring ridge **65** and a locking ridge **67**. The anchoring ridge **65** defines the opening **70**, **72** in each of the bearings **84**, **86**. As best shown in FIG. **22**, the fasteners **74**, **76** each include two sets of threads: anchoring threads **69**, **73** and locking threads **71**, **75**. The anchoring threads **69**, **73** are configured to mate with the anchoring ridges **65** in the first and second bearings **84**, **86**, respectively, while the fasteners **74**, **76** are being screwed into the bone segments **28**, **30**. The locking threads **71**, **75** are configured to mate with the locking ridge **67** when the fasteners **74**, **76** are substantially or completely screwed down into the bone segments **28**, **30** so as to prevent the bearings from rotating with respect to the plate portion **68**. More specifically, the diameter of the locking threads **71**, **75** is sized so as to cause the bearings **84**, **86** to expand and form a friction engagement with the plate portion **68**. The bearings **84**, **86** are able to rotate with respect to the plate portion **68** except when the locking threads **71**, **75** cause the bearings **84**, **86** to expand and form a friction engagement with the plate portion **68**. The locking feature of the fasteners **74**, **76** make it easier and more effective for the medical professional to "float" the orthopedic plate **14** above the bone segments **28**, **30** (i.e., to space the plate **14** apart from the bone segments **28**, **30**). The locking feature of the fasteners **74**, **76** also may improve or stabilize the connection between the bone segments **28**, **30**, even when a jig **12** is not being used. The locking feature also prevents or minimizes undesired rotation the bearings **84**, **86** after the plate **14** has been installed.

[0064] Referring to FIGS. **5***a* and **5***b*, the bearings **84**, **86** each include an outer surface **88**, **90** that is eccentric to the inner surface (e.g., the anchoring ridge **65**) of the bearing **84**, **86**. In other words, the outer surface **88**, **90** of the bearings **84**, **86** and the anchoring ridge **65** each generally define circles that have different centerpoints. As a result, the distance **80** is adjusted as one of the bearings **84**, **86** is rotated with respect to the frame portion **68**. A medical professional is able to use the orthopedic plate **14** to cause the first and second bone segments **28**, **30** to dynamically compress, or cause the bone segments **28**, **30** to come into contact with each other, and potentially promote biological healing.

[0065] The plate adjustment mechanism **78** shown in the figures is configured to be able to adjust the distance **80** while the orthopedic plate **14** is spaced apart from at least one of the first and second bone segments **28**, **30**, as is measured generally along a fastener axis **82** (FIG. **15**). In other words, the orthopedic plate **14** does not need to abut the bone segments **28**, **30** to be able to adjust the distance **80**, thereby permitting dynamic compression of the bone segments **28**, **30** while minimizing, reducing, or avoiding distortion to the bone segments **28**, **30** by the orthopedic plate **14**. Utilizing the orthopedic plate **14** in this manner may be particularly advantageous where the bone segments **28**, **30** are uneven along the length of the orthopedic plate **14**. However, the orthopedic plate **14** is also usable and adjustable when it is abutting the bone segments **28**, **30**. In some cases, such as where the bone segments **28**, **30** are relatively flat, it may be desirable for the orthopedic plate **14** to abut the bone segments **28**, **30**.

[0066] As is illustrated in FIGS. **5***a* and **5***b*, the distance **80** is largest (and the orthopedic plate **14** offers the least amount of compression) when the first and second bearings **84**, **86** are each rotated such as to be in a non-compressed position **94** (i.e., where the centerpoints of the first and second bearings **84**, **86** are furthest from each other). Conversely, the distance **80** is smallest (and the orthopedic plate **14** offers the maximum amount of compression) when the first and second bearings **84**, **86** are each rotated such as to be in a compressed position **96** (i.e., where the centerpoints of the first and second bearings **84**, **86** are closest to each other). Each of the first and second bearings **84**, **86** defines a compression adjustment distance **98**. The compression adjustment distance **98** is the distance measured along the longitudinal axis of the orthopedic plate **14** between the centerpoint of a bearing in the non-compressed position **94** and the compressed position **96**. The distance **80** is therefore adjustable by an amount equal to the compression adjustment distance **98** of the first bearing **84** plus the compression adjustment distance **98** of the second bearing **86**. In the embodiment shown in FIGS. **5***a* and **5***b*, the orthopedic plate **14** has a compression adjustment distance of approximately 1.5 millimeters, thereby allowing a medical professional to adjust the distance **80** of the orthopedic plate **14** by approximately 3.0 millimeters.

[0067] Another advantage to the orthopedic plate **14** shown in FIGS. **5***a* and **5***b* is that it allows a medical professional to adjust a horizontal distance (i.e., the distance **80**) of the first and second fasteners **74**, **76** independently of a vertical positioning (i.e., the position of the fasteners **74**, **76** along the fastener axis **83**) of the first and second fasteners **74**, **76**. This configuration allows a medical professional to have more control over the position (both horizontally and vertically) of the orthopedic plate **14** when coupling the same with the first and second bone segments **28**, **30**.

[0068] The orthopedic device **10** shown in the figures also includes a cutting guide **100** coupled with the jig **12** and configured to guide a surgical saw **102** or other cutting instrument. For example, the cutting guide **100** has a pair of cutting slots **104**, **106** configured to receive the surgical saw **102** and allow a medical professional to cut through the bone segments **28**, **30** in a relatively straight line by following the slots **104**, **106**. Often times, a medical professional will desire or need to cut opposing faces of bone segments **28**, **30** so as to create two complimentary surfaces that will easily and effectively achieve a union through normal biological healing. It is often advantageous for the complimentary surfaces to be flat surfaces that are generally perpendicular to the longitudinal axis of the bone(s). The cutting guide is adjustable along the y-axis **54** (FIG. **1**) by way of a tab-slot connection **108** and a securing pin **110** (FIG. **8**). The cutting guide is adjustable along the x-axis **62** (FIG. **1**) by way of the jig adjustment mechanism **34** (FIG. **1**).

[0069] For illustrative purposes, a method of coupling first and second bone segments **28**, **30** of a patient's body **26** is herein described. A medical professional (generally designated by numeral **120** in FIG. **11**) makes an incision in the patient's body **26** and exposes the bone segments **28**, **30** to be coupled via clamps **122**, **124**. As shown in FIG. **7**, the medical professional couples the first arm **20** of the jig **12** with the first bone segment **28** and couples the second arm **24** of the jig **12** with the second bone segment **30** by using fasteners **126**, **128**. Turning to FIGS. **8** and **9**, the medical professional then couples the cutting guide **100** with the jig **12** to facilitate cutting at least one of the first and second bone segments **28**, **30** with the surgical saw **102**. For example, the cutting guide **100** may be coupled with the jig **12** via a setscrew **129** (FIGS. **2**, **9**) and a dovetailed holding clamp **131** (FIG. **9**). The cutting slots **104**, **106** shown in the figures are approximately 3.0 millimeters apart from each other, but may have any suitable distance therebetween. Also, the medical professional can adjust the distance between the two cuts by making a first cut in the first bone segment **28** and then horizontally adjusting the position of the cutting guide **100** via the securing pin **110**. The medical professional then decouples the cutting guide **100** from the jig **12**.

[0070] As shown in FIG. **10**, after cutting the bone segments **28**, **30** preferably have flat, complimentary surfaces **130**, **132** that will promote union when said surfaces are compressed together. As shown in FIG. **11**, with the locking key **36** in the unlocked position **36***b*, the medical professional **120** rotates the adjustment key **46** so as to move the first and second arms **20**, **24** with respect to each other. For example, the medical professional **120** rotates the adjustment key **46** until the bone segments **28**, **30** are in contact with each other or close to being in contact with each other. The medical professional may also, or alternatively, adjust the distance between the bone segments **28**, **30** by unlocking the locking key **36** and manually pressing together or pulling apart the first and second portions of the jig **12**.

[0071] Once the arms **20**, **24** of the jig **12** are positioned as desired, the medical professional then moves the locking key **36** into the locked position **36***a* (FIG. **12**) thereby coupling the plate holding mechanism **16** with the jig **12**. The medical professional can adjust the horizontal or vertical position of the orthopedic plate **14** via the vertical adjustment mechanism **52** and the horizontal adjustment mechanism **60**, respectively.

[0072] As shown in FIG. **14**, once the orthopedic plate **14** is in the desired position with respect to the bone segments **28**, **30**, the medical professional secures drilling guides **134**, **136** to the orthopedic plate **14** and uses a surgical drill **138** to drill through the drill guides **134**, **136** and into the bone segments **28**, **30**. The drilling guides **134**, **136** shown in the figures are perpendicular to the orthopedic plate **14** and are coupled therewith by a threaded connection. Specifically, the drilling guides **134**, **136** mate with the locking ridge **67**. The inside diameter of the drilling guides **134**, **136** corresponds to the diameter of the first and second openings **70**, **72** (i.e., the diameter defined by the anchoring ridge) to assist with alignment of the drill bit as it creates holes in the bone segments **28**, **30**. The medical professional then removes the drilling guides **134**, **136** from the orthopedic plate **14** and, as is shown in FIG. **15**, secures a first portion of the orthopedic plate **14** to the first bone segment **28** and secures a second portion of the orthopedic plate **14** to the second bone segment **30**. For example, the medical professional shown in FIG. **15** is securing the orthopedic plate **14** to the bone segments **28**, **30** via the fasteners **74**, **76** and a screwdriver **140**.

[0073] When the fastener heads are flush with the bearings, the bearings outwardly expand, thereby locking the bearings in place with respect to the orthopedic plate frame portion and prevent rotation of the bearing. When the bearing is expanded (and thus locked) it forms an interference fit with the orthopedic plate frame portion, thereby substantially or completely preventing the bearing from back spinning into an uncompressed position under physiologic loads. The bearings **84**, **86** include bearing key holes **148**, **150** that facilitate rotation of the bearings **84**, **86**, as well as facilitate compression of the bone segments **28**, **30**, as will be described in more detail below. In other words, the first and second bearings **84**, **86** are configured to facilitate rotation of the bearings with respect to the frame portion **68** while the fasteners **74**, **76** are received within the first and second openings **70**, **72**, respectively.

[0074] Next, the plate holding mechanism **16** is decoupled from the orthopedic plate **14** and the jig is decoupled from the bone segments **28**, **30**. The medical professional then, if desired, uses the first and/or second plate adjustment mechanisms **78**, **79** to adjust the distance **80** between the first and second bone segments **28**, **30**. For example, as shown in FIGS. **16-18**, the medical professional first loosens the fastener by at least one-half of a turn to unlock the bearing with respect to the frame portion. The medical professional may then use a bearing key **142** to rotate the first and/or second bearings **84**, **86** with respect to the frame portion **68** of the orthopedic plate **14**. The bearing key **142** shown in the figures includes a first key tooth **144** and a second key tooth **146** that correspond to and fit within the bearing key holes **148**, **150**, respectively. The bearing key holes **148**, **150** are spaced apart and shaped so as to permit the medical professional to apply a torque force thereon and rotate the bearings **84**, **86**, thereby permitting dynamic compression of the bone segments **28**,

30. For example, the bearing key holes **148**, **150** shown in the figures are generally opposite each other on the bearings **84**, **86**. Additionally, the bearing key holes **148**, **150** shown in the figures have a generally curved shape to promote a torque force on the bearings **84**, **86**.

[0075] The desired distance **80** may vary depending on various circumstances, but it is typically 0.00 to 0.05 millimeters. After rotationally adjusting the bearings and obtaining a desired distance **80** and, if applicable, compression force, the medical professional tightens the fasteners so the fastener heads are flush with the bearings and the bearings are locked with respect to the frame portion. The fastener heads shown in the figures are conical, but they may be flat or any other shape.

[0076] As shown in FIGS. **19-21**, the bearing **84** may be coupled with the frame portion **68** of the orthopedic plate **14** via a spring connection. For example, the bearing has a notch **152** that allows the bearing to act like a C-shaped spring and compress and expand depending on the lateral force applied. The bearing **84** is inserted within a guide sleeve **154** that is coupled with or positioned flush with the frame portion **68** of the orthopedic plate **14**. A punch mechanism **156** pushes down on the bearing **84** and forces it downward in the guide sleeve **154**, until the bearing **84** is in a desired position with respect to the frame portion **68**. For example, in the embodiment shown in the figures, the bearing **84** is in the desired location when an outer surface **85** of the bearing contacts an inner surface **87** of the frame portion **68**. More specifically, in the embodiment shown in the figures, the bearing **84** is in the desired location when it snaps into place in the frame portion **68**. The outer surface **85** of the bearing **84** includes a notch **89** that is configured to mate with a ring **91** in the inner surface **87** of the frame portion **68** to secure the bearing **84** with respect to the frame portion **68**. The guide sleeve **154** shown in the figures includes an inner wall **155** that is tapered inwardly to increase the compression of the bearing **84** as it is forced downward by the punch mechanism **156**.

[0077] In one alternative embodiment, as shown in FIG. **23**, an orthopedic plate **214** is provided having a bearing **268** with a first notch **352** in one portion of the bearing **268** and a second notch **356** diametrically opposed to the first notch **352** to alter the spring coefficient of the bearing **268** compared to the bearing shown in the prior figures. The bearing key holes **348**, **350** are also larger than those shown in the prior figures and define portions of the outer surface of the bearing **268**.

[0078] In another alternative embodiment, as shown in FIGS. **24-26**, an orthopedic plate **414** is provided having a frame portion **468** and first and second plate adjustment mechanisms **478**, **479** that are each configured to adjust a distance between first and second fasteners received within the plate adjustment mechanisms **478**, **479**. The plate adjustment mechanisms **478**, **479** shown in the figure include first and second bearing **484**, **486** that are each rotatable with respect to the frame portion **468**. The frame portion **468** is generally curved along a longitudinal axis **410** so as to match the curvature of a bone. The orthopedic plate **414** also defines openings **412**, **413**, **414** for receiving fasteners and thereby further securing the orthopedic plate **414** to the bone. Alternatively, the opening **413** may be used as a connection point to a jig **12** or other device.

[0079] As shown in FIG. **27**, in an alternative design, fasteners **174**, **176** include a locking head **171**, **175** configured to be received by the locking ridge **67** of the bearings. The locking head **171**, **175** is tapered so as to increase the radially expansion of the diameter of the bearings as the locking head **171**, **175** is driven downward with respect to the orthopedic plate. As with the locking threads **71**, **75**, the locking heads **171**, **175** are configured to mate with the locking ridge **67** when the fasteners **174**, **176** are substantially or completely screwed down into the bone segments **28**, **30** so as to prevent the bearings from rotating with respect to the plate portion **68**. More specifically, the diameter of the locking threads **171**, **175** is sized so as to cause the bearings **84**, **86** to expand and form a friction engagement with the plate portion **68**. The bearings **84**, **86** are able to rotate with respect to the plate portion **68** except when the locking threads **171**, **175** cause the bearings **84**, **86** to expand and form a friction engagement with the plate portion **68**.

[0080] FIG. **25** shows another alternative design for a fastener **374**, where a locking head **371** is tapered so as to increase the radially expansion of the diameter of the bearings as the locking head **371** is driven downward with respect to the orthopedic plate **414**. Additionally, the locking head **371** includes threads **372** configured to mate with threads in the orthopedic plate **414**.

[0081] It should be noted that the disclosure is not limited to the embodiment described and illustrated as examples. A large variety of modifications have been described and more are part of the knowledge of the person skilled in the art. These and further modifications as well as any replacement by technical equivalents may be added to the description and figures, without leaving the scope of the protection of the disclosure and of the present patent.

1. An orthopedic plate comprising:

a frame portion; and

a bearing rotatably coupled with the frame portion, wherein the bearing defines an opening configured to receive a fastener for fastening the orthopedic plate to a body, wherein the bearing includes an outer surface that is eccentric to the opening such that a position of the opening with respect to the frame portion is adjustable as the bearing rotates and wherein the bearing includes at least a first ridge that is an anchoring ridge and a second ridge that is a locking ridge.

2. An orthopedic plate as in claim **1**, wherein the anchoring ridge has an inner diameter that is smaller than an inner diameter of the locking ridge.

3. An orthopedic plate as in claim **2**, wherein the anchoring ridge is configured to mate with a first set of fastener threads and the locking ridge is configured to mate with a second set of fastener threads.

4. An orthopedic plate as in claim **3**, wherein the bearing is configured to expand in diameter when the second set of fastener threads is received within the locking ridge.

5. An orthopedic plate as in claim **2**, wherein the anchoring ridge is configured to mate with a first set of fastener threads and the locking ridge is configured to receive a locking head.

6. An orthopedic plate as in claim **5**, wherein the bearing is configured to expand in diameter when the locking head is received within the locking ridge.

7. An orthopedic plate as in claim **1**, further comprising a second bearing rotatably coupled with the frame portion, wherein the second bearing defines a second opening configured to receive a second fastener for further fastening the orthopedic plate to a body, wherein the second bearing includes an outer surface that is eccentric to the second opening.

8. An orthopedic plate as in claim **1**, wherein the bearing includes a notch to permit compression or expansion of the bearing.

9. An orthopedic plate comprising:

a frame portion; and

a bearing rotatably coupled with the frame portion, wherein the bearing defines an opening configured to receive a fastener for fastening the orthopedic plate to a body, wherein the bearing includes an outer surface that is eccentric to the opening such that a position of the opening with respect to the frame portion is adjustable as the bearing rotates and wherein the bearing includes at least one key hole to facilitate rotation of the bearing with respect to the frame portion.

10. An orthopedic plate as in claim **9**, wherein the bearing includes at least two key holes to facilitate rotation of the bearing with respect to the frame portion.

11. An orthopedic plate as in claim **9**, wherein the bearing is configured to facilitate rotation of the bearing with respect to the frame portion while the fastener is received within the opening.

12. An orthopedic device configured to facilitate coupling first and second bone segments of a body, comprising a jig having a first arm configured to be secured to the first bone segment, a second arm configured to be secured to the second bone segment, and a jig adjustment mechanism configured to adjust the position of the first arm with respect to the second arm to adjust a distance between the first and second bone segments.

13. An orthopedic device as in claim **12**, wherein the jig adjustment mechanism includes a locking key having a locked position wherein the first and second arms are not movable with respect to each other and an unlocked position wherein the first and second arms are movable with respect to each other.

14. An orthopedic device as in claim **13**, wherein the jig adjustment mechanism includes a gear and a track configured to facilitate movement between the first and second arms.

15. An orthopedic device as in claim **12**, wherein the jig adjustment mechanism includes an adjustment key configured to rotate the gear and promote movement between the first and second arms.

16. An orthopedic device as in claim **15**, further comprising a cutting guide coupled with the jig and configured to facilitate cutting at least one of the first and second bone segments.

17. An orthopedic device as in claim **12**, further comprising a plate holding mechanism coupled with the jig and configured to position an orthopedic plate with respect to the first and second bone segments.

18. An orthopedic device as in claim **12**, wherein the orthopedic plate is configured to couple the first and second bone segments, the orthopedic device further comprising:

a first fastener coupled with the orthopedic plate and configured to fasten the orthopedic plate to the first bone segment;

a second fastener coupled with the orthopedic plate and configured to fasten the orthopedic plate to the second bone segment, wherein the first and second fasteners are separated from each other by a distance measured along a first axis and wherein a second axis extends generally along a longitudinal axis of the first fastener; and

a plate adjustment mechanism coupled with at least the first fastener such that the distance is adjustable independently of a position of the first fastener along the longitudinal axis.

19-21. (canceled)

* * * * *