US009220518B2

(12) **United States Patent**
Neal et al.

(10) **Patent No.: US 9,220,518 B2**
(45) **Date of Patent: Dec. 29, 2015**

(54) **POROUS SPACERS, INSTRUMENTS, AND METHODS FOR FOOT AND ANKLE FUSION**

(71) Applicant: **Zimmer, Inc.**, Warsaw, IN (US)

(72) Inventors: **David J. Neal**, Morris Plains, NJ (US); **Joseph Markham**, Hillsborough, NJ (US); **Victor Valderrabano**, Hofstetten (CH); **Richard Claridge**, Scottsdale, AZ (US); **John Shirk Kirchner**, Birmingham, AL (US); **Mehul Dharia**, Albuquerque, NM (US); **Ray Zubok**, Midland Park, NJ (US); **Greg Stebbins**, Hoboken, NJ (US)

(73) Assignee: **ZIMMER, INC.**, Warsaw, IN (US)

(*) Notice: Subject to any disclaimer, the term of this patent is extended or adjusted under 35 U.S.C. 154(b) by 0 days.

(21) Appl. No.: **14/122,089**

(22) PCT Filed: **Apr. 23, 2013**

(86) PCT No.: **PCT/US2013/037758**

§ 371 (c)(1),
(2) Date: **Nov. 25, 2013**

(87) PCT Pub. No.: **WO2013/169475**

PCT Pub. Date: **Nov. 14, 2013**

(65) **Prior Publication Data**

US 2015/0057665 A1 Feb. 26, 2015

Related U.S. Application Data

(60) Provisional application No. 61/644,214, filed on May 8, 2012.

(51) **Int. Cl.**
A61F 5/00 (2006.01)
A61B 17/17 (2006.01)
(Continued)

(52) **U.S. Cl.**
CPC ***A61B 17/1739*** (2013.01); ***A61B 17/15*** (2013.01); ***A61F 2/4202*** (2013.01); *A61B 17/148* (2013.01); *A61B 2017/1775* (2013.01)

(58) **Field of Classification Search**
USPC 606/86 R–90
See application file for complete search history.

(56) **References Cited**

U.S. PATENT DOCUMENTS

2005/0143745 A1* 6/2005 Hodorek et al. 606/87
2008/0154270 A1* 6/2008 Haines et al. 606/88
(Continued)

FOREIGN PATENT DOCUMENTS

EP 1393696 A1 3/2004
FR 2715557 A1 8/1995
WO WO-2013169475 A1 11/2013

OTHER PUBLICATIONS

"International Application Serial No. PCT/US2013/037758, International Preliminary Report on Patentability mailed Nov. 20, 2014.", 9 pgs.
(Continued)

Primary Examiner — Sameh Boles
(74) *Attorney, Agent, or Firm* — Schwegman Lundberg & Woessner, P.A.

(57) **ABSTRACT**

Porous spacers (**100**) are provided for foot and ankle fusion. The porous spacers disclosed herein may be implanted between separate bones of a joint or between two segments of a single bone following an osteotomy procedure. Such spacers may be used in conjunction with an ankle resection system which includes a resection frame (**150**) and a resection guide (**170**). The resection frame can be anchored to the distal tibia and/or the talus and provides an opening (**155**) through which a bone cutting element can pass for cutting underlying bone. The resection guide can include one or more cutting slots (**169**, **171**, **172**) and the resection guide can be coupled to the resection frame with the one or more cutting slots positioned over the opening in the resection frame so that the bone cutting element can pass through the one or more cutting slots and through the opening in the resection frame for cutting the distal tibia and/or the talus.

14 Claims, 28 Drawing Sheets

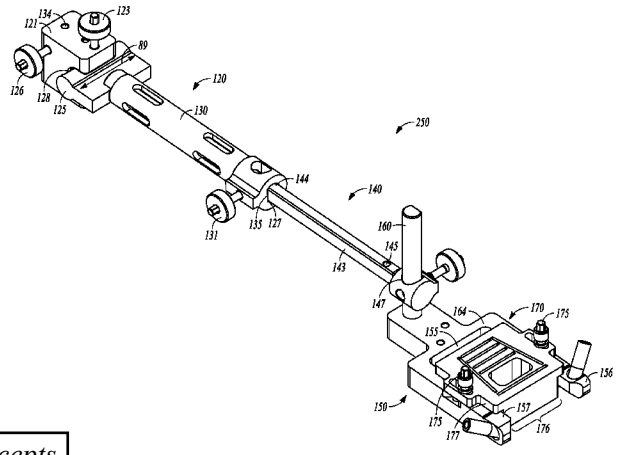

Paragon 28 v. Treace Medical Concepts
IPR2026-00194
Paragon Ex. 1027

(51) **Int. Cl.**

A61B 17/15	(2006.01)
A61F 2/42	(2006.01)
A61B 17/14	(2006.01)

(56) **References Cited**

U.S. PATENT DOCUMENTS

2010/0262150 A1 10/2010 Lian
2012/0109131 A1 5/2012 Vasarhelyi et al.
2014/0207143 A1 * 7/2014 Lee et al. 606/82

OTHER PUBLICATIONS

"International Application U.S. Appl. No. PCT/US2013/037758, International Search Report mailed Jun. 28, 2013", 6 pgs.
"International Application U.S. Appl. No. PCT/US2013/037758, Written Opinion mailed Jun. 28, 2013", 7 pgs.

* cited by examiner

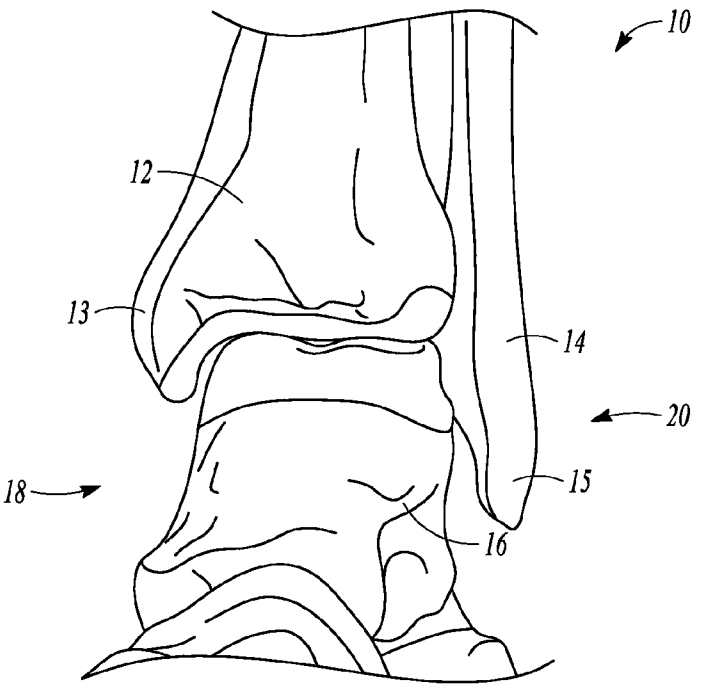

FIG. 1

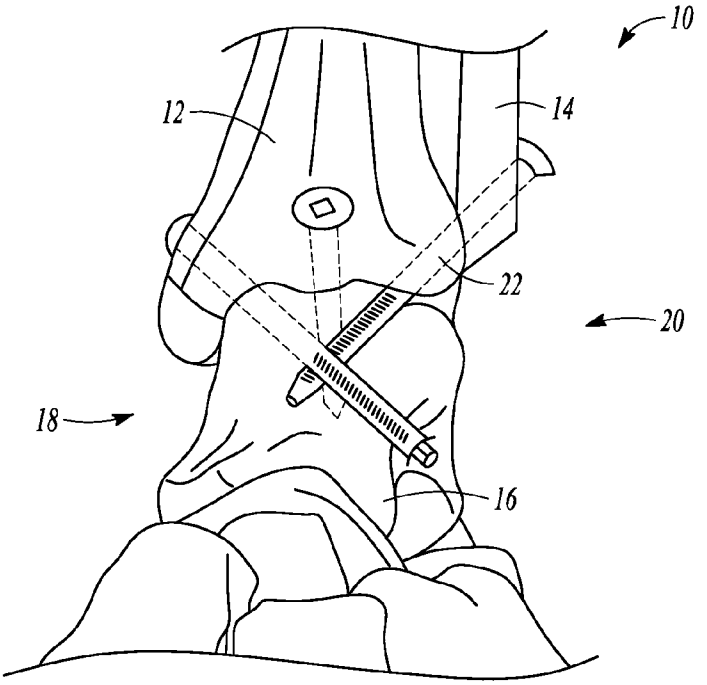

FIG. 2
(PRIOR ART)

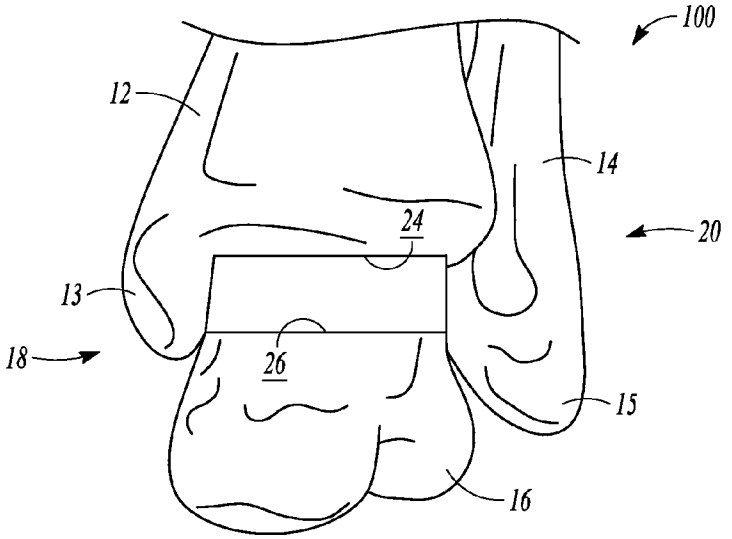
100
12
14
24
20
13
18
26
15
16

FIG. 3A

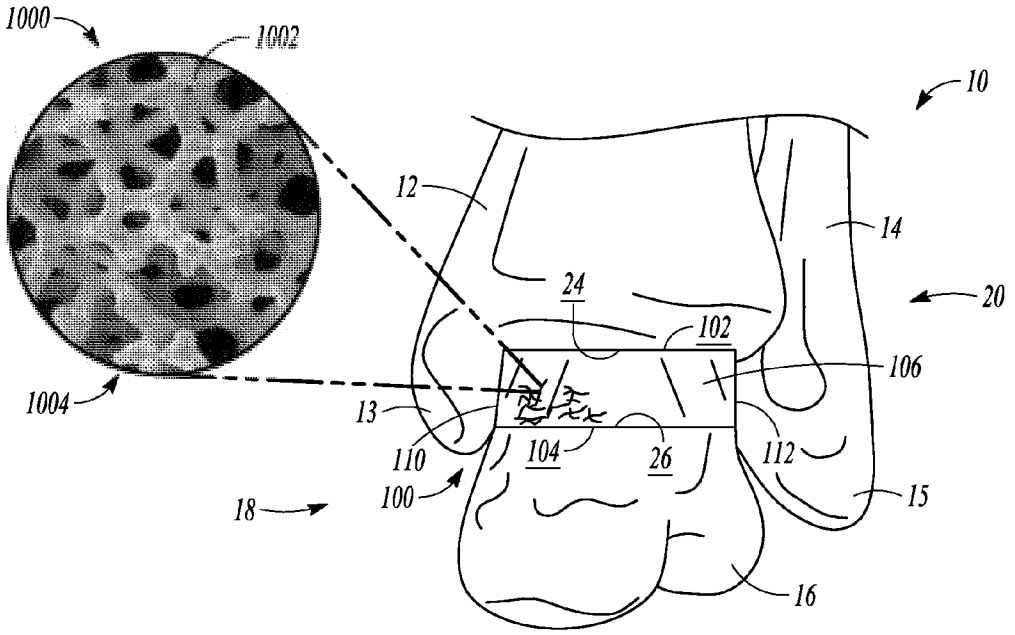
1000
1002
10
12
14
24
20
102
106
1004
13
110
104
26
112
18
100
15
16

FIG. 3B

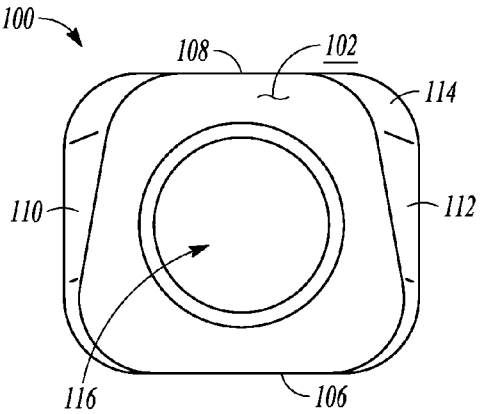

FIG. 3C

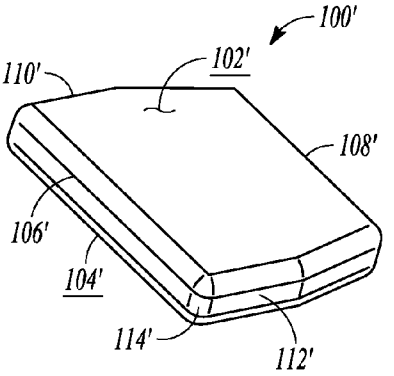

FIG. 3D

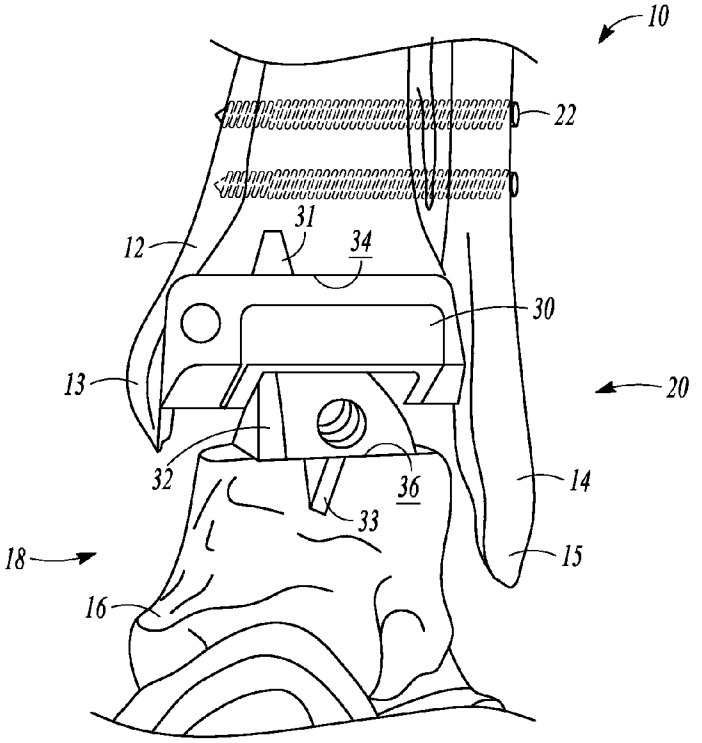

FIG. 4
(PRIOR ART)

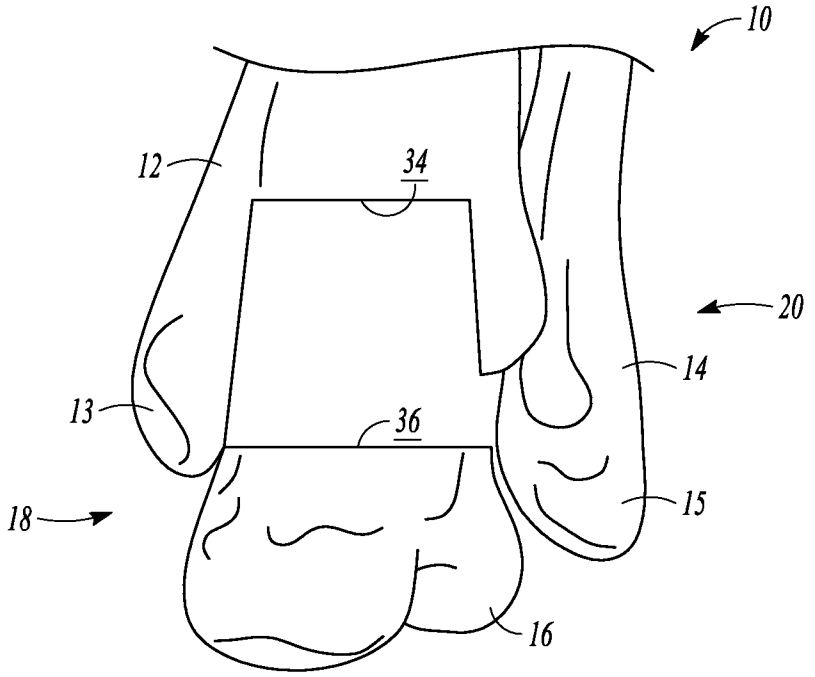
10
12
34
20
14
13
36
18
15
16

FIG. 5A

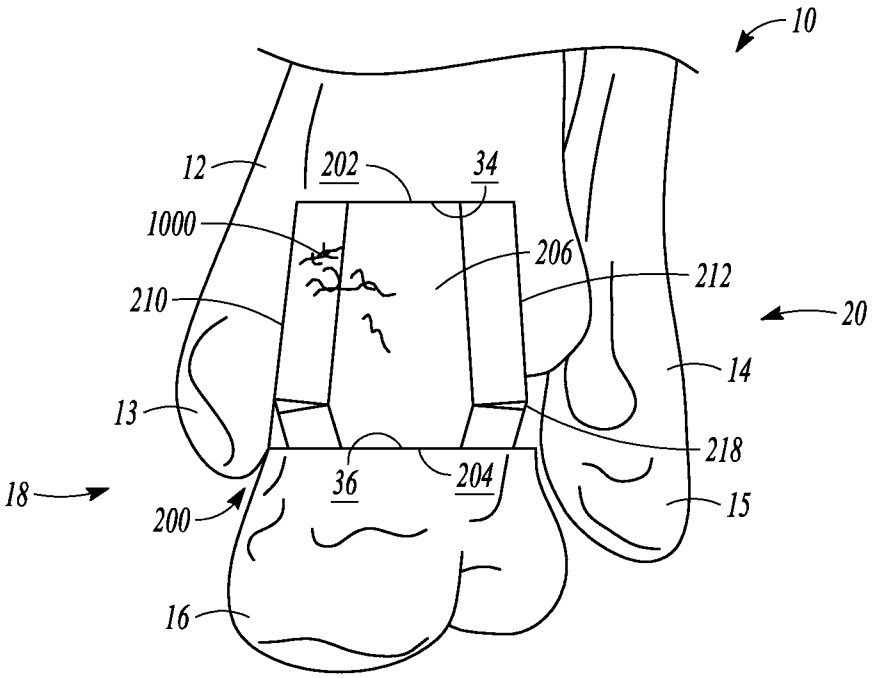
10
12
202
34
1000
206
212
210
20
14
13
218
36
204
18
200
15
16

FIG. 5B

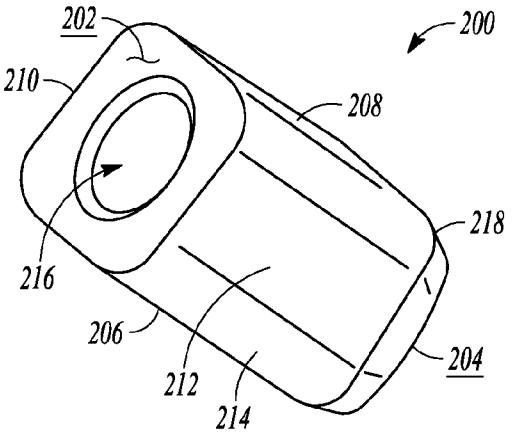

FIG. 5C

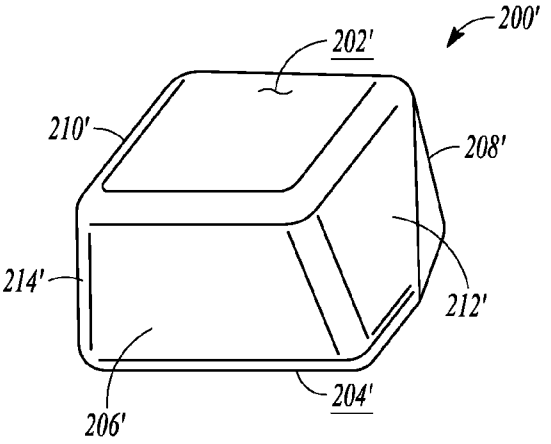

FIG. 5D

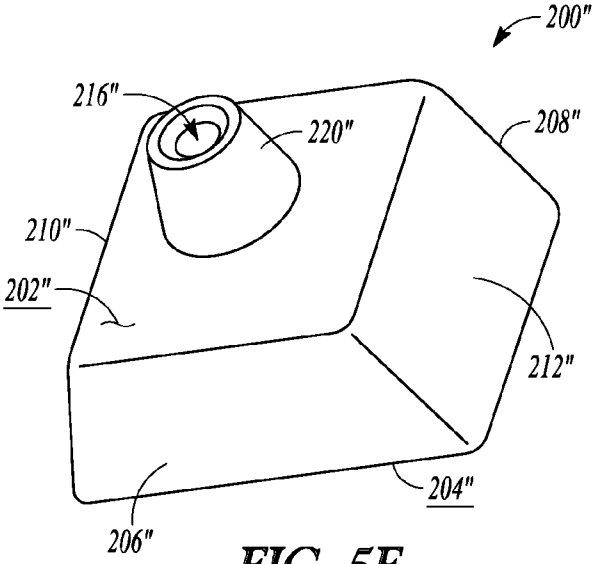

FIG. 5E

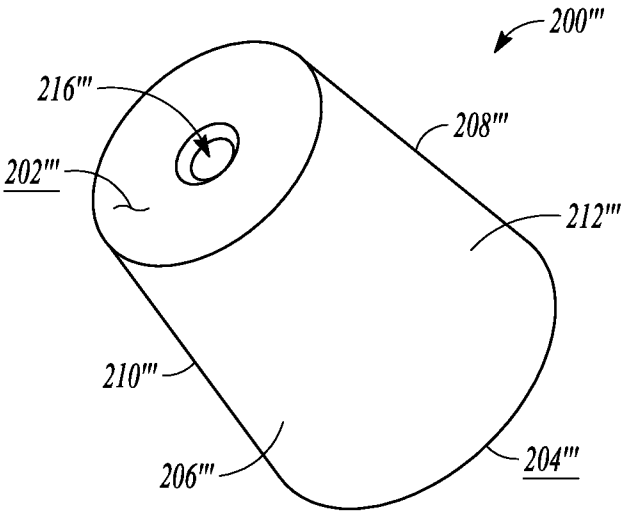
200'''
216'''
208'''
202'''
212'''
210'''
206'''
204'''

FIG. 5F

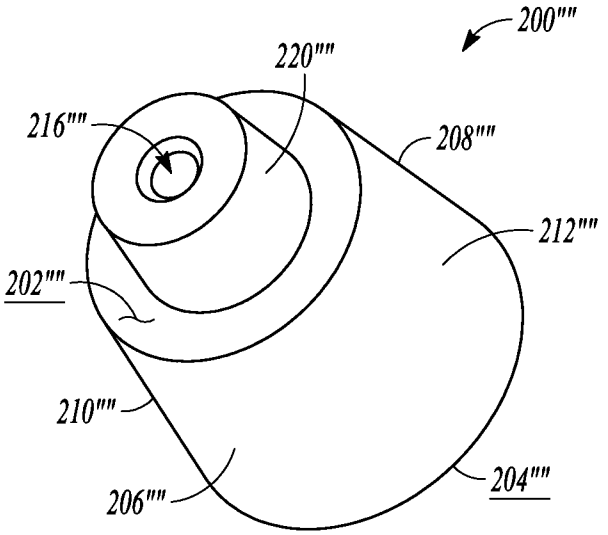
200''''
220''''
216''''
208''''
212''''
202''''
210''''
206''''
204''''

FIG. 5G

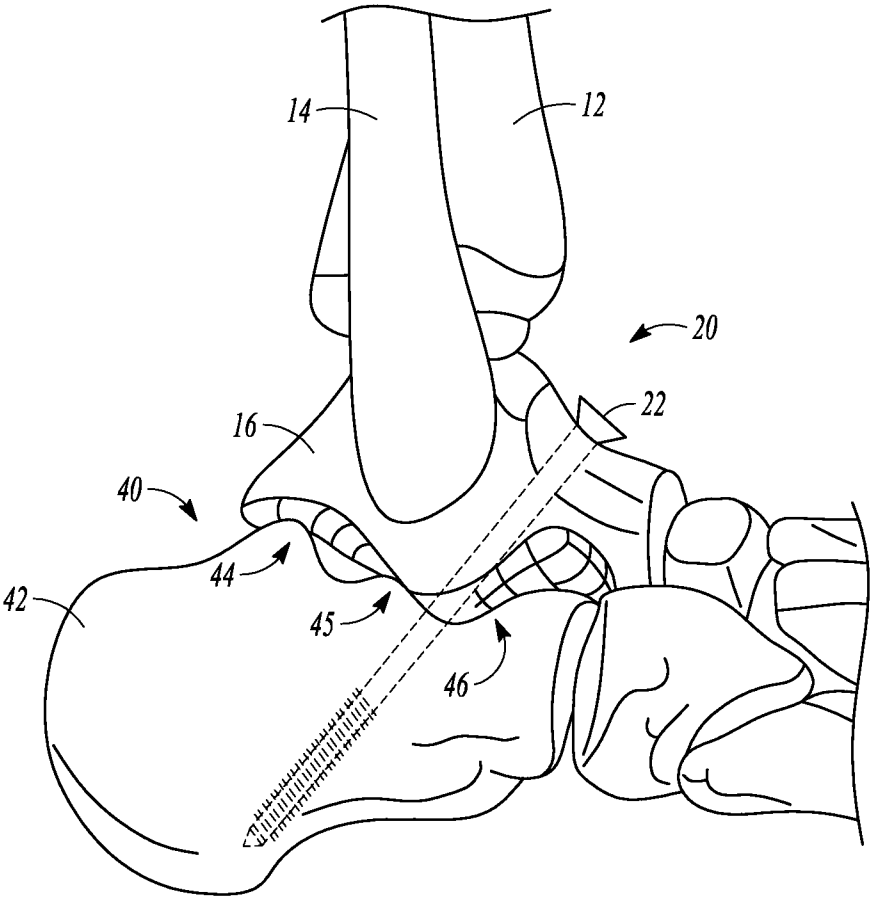

FIG. 6

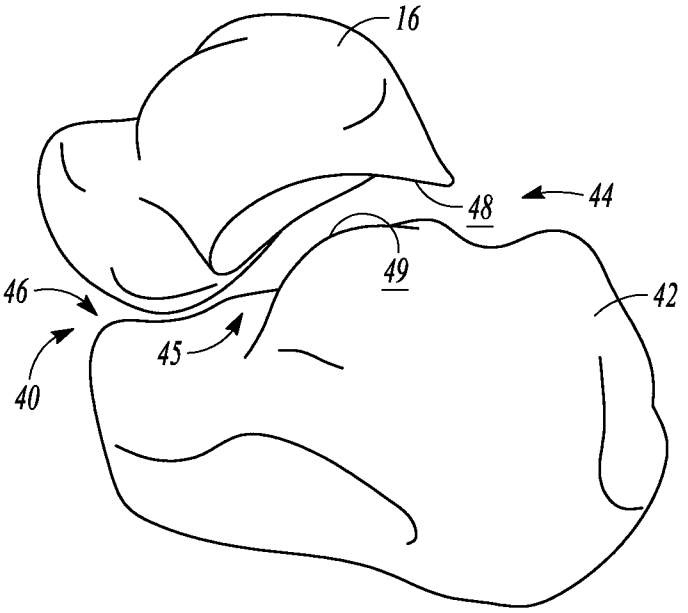

FIG. 7A

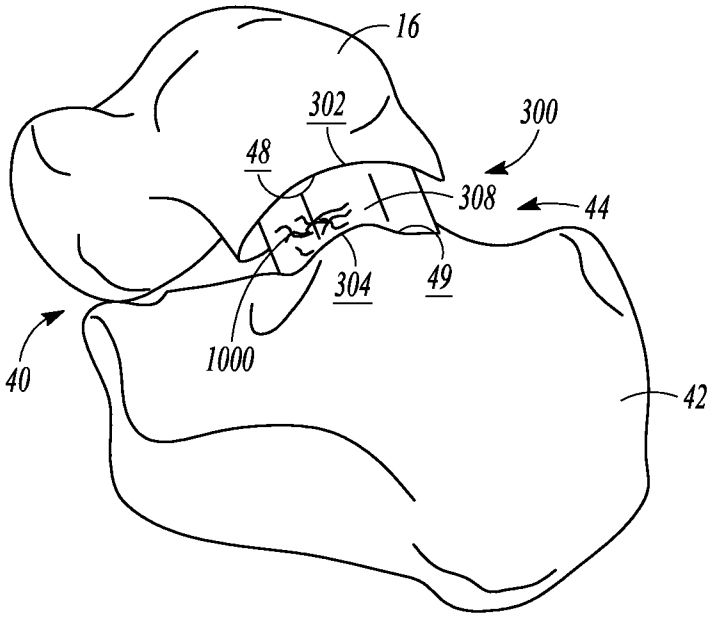

FIG. 7B

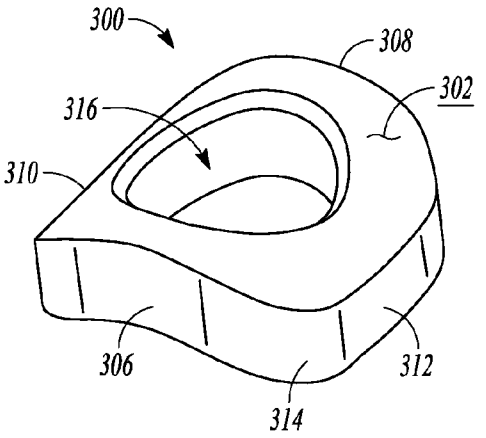

FIG. 7C

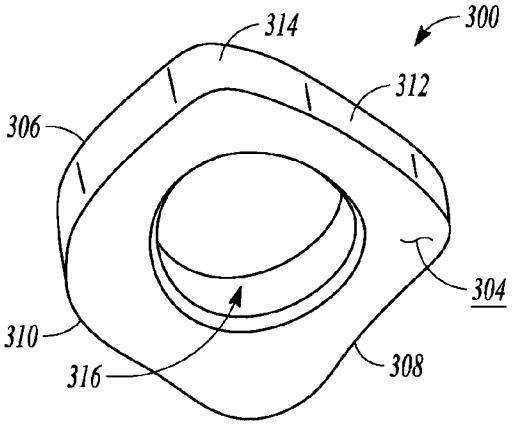

FIG. 7D

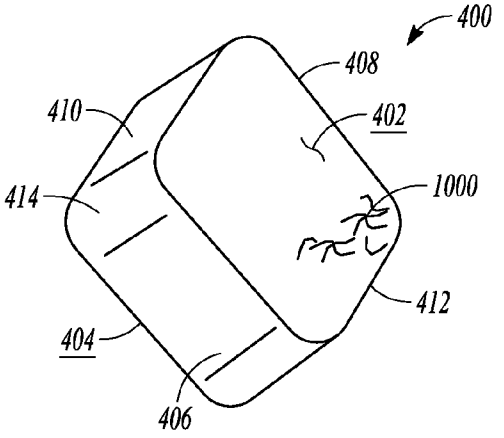

FIG. 7E

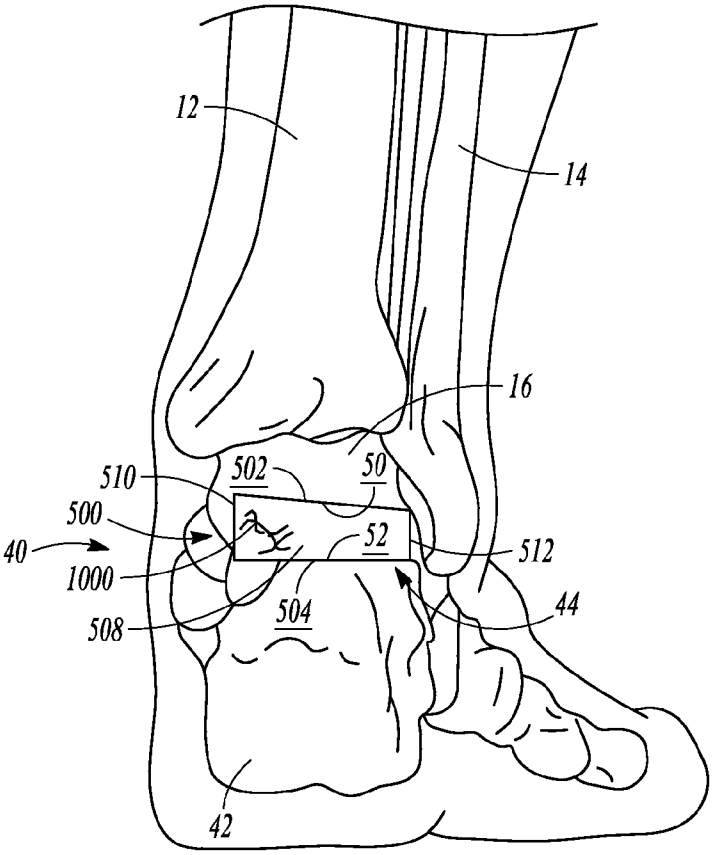
12
14
16
510
502
50
500
40
52
512
1000
504
44
508
42

FIG. 8A

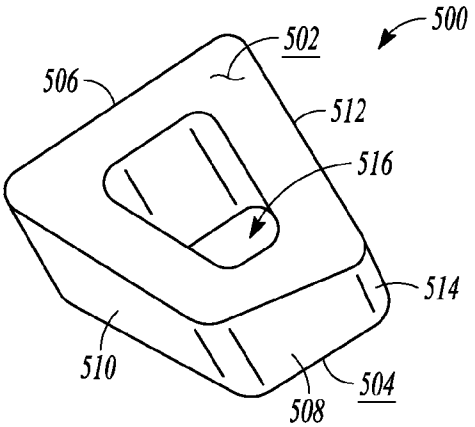
500
502
506
512
516
514
510
504
508

FIG. 8B

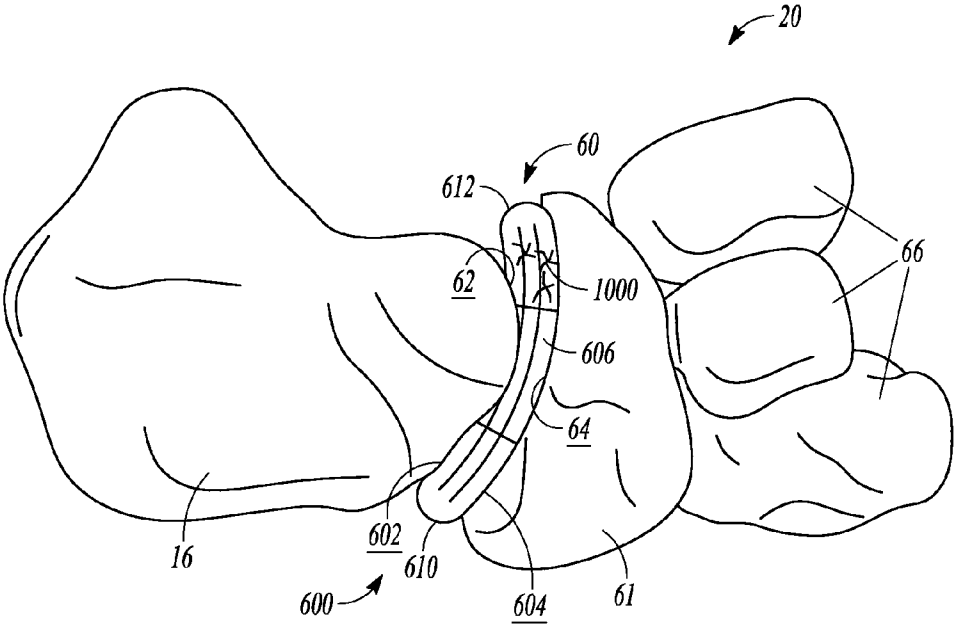
20
60
612
62
1000
606
64
66
16
602
610
600
604
61

FIG. 9A

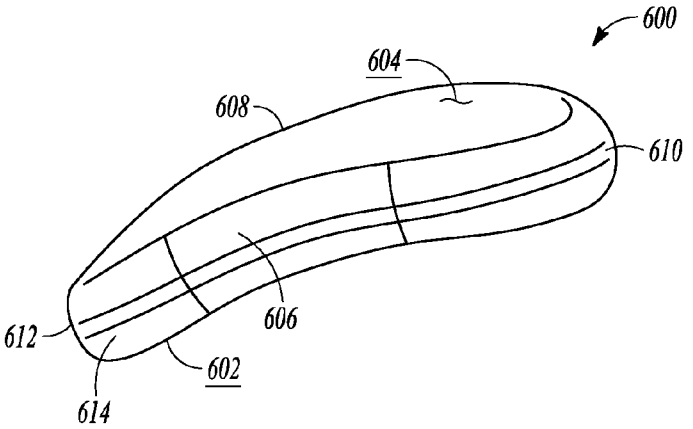
600
604
608
610
606
612
602
614

FIG. 9B

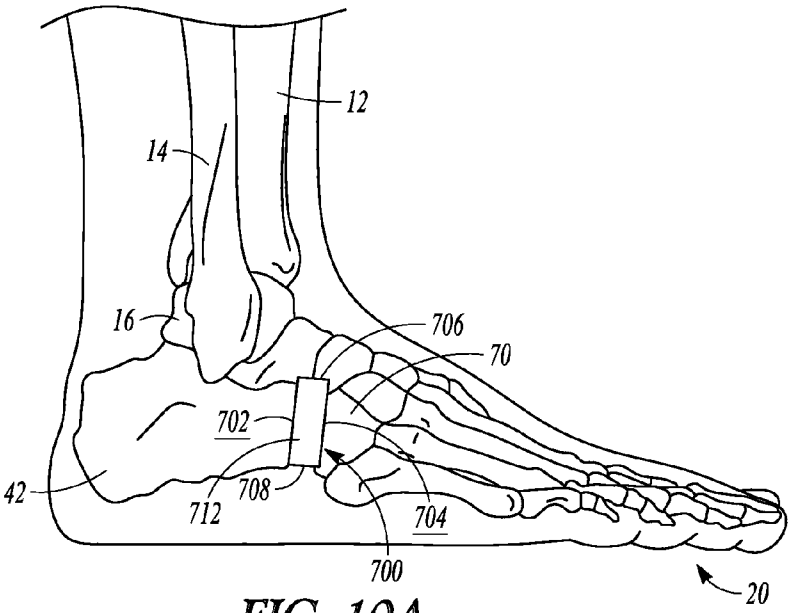

FIG. 10A

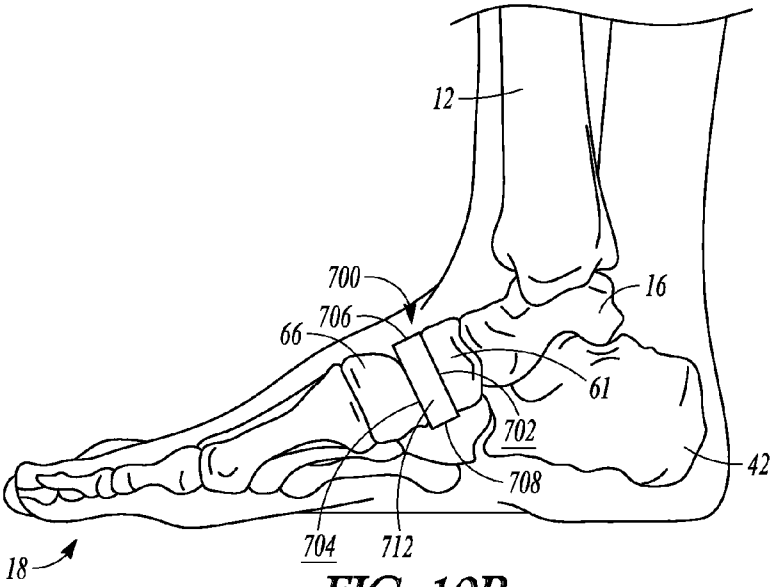

FIG. 10B

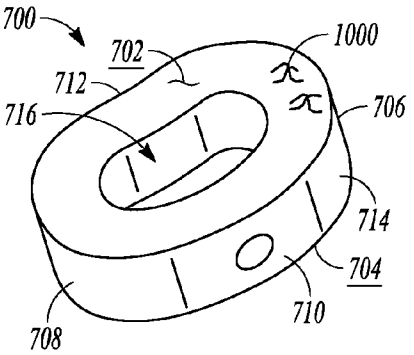

FIG. 10C

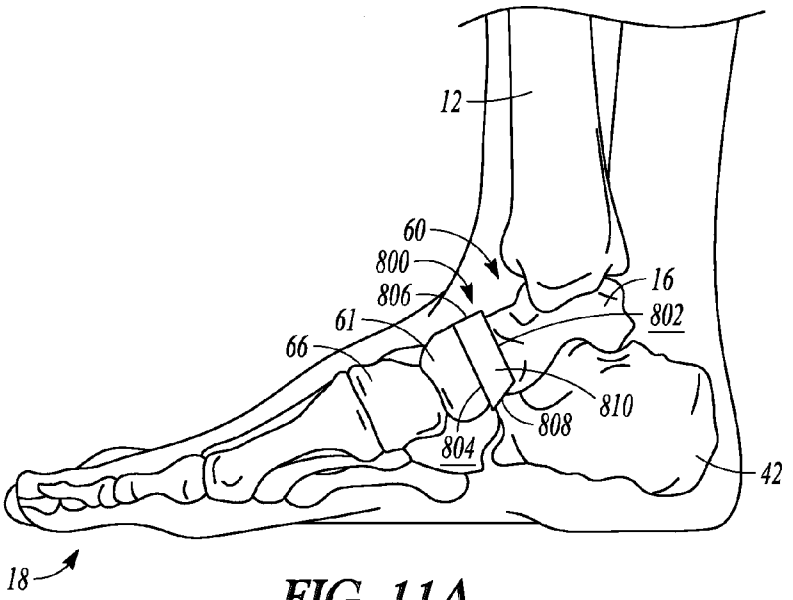

FIG. 11A

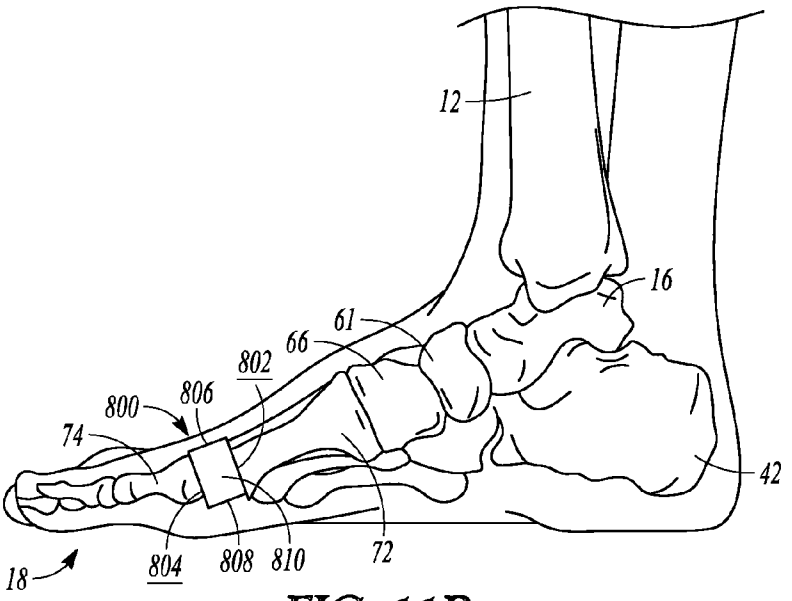

FIG. 11B

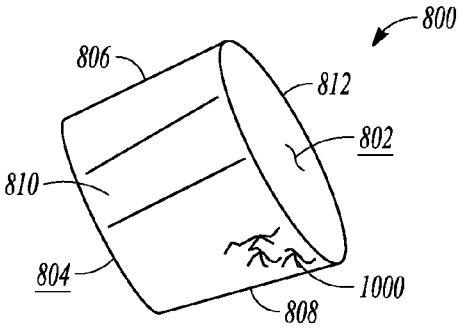

FIG. 11C

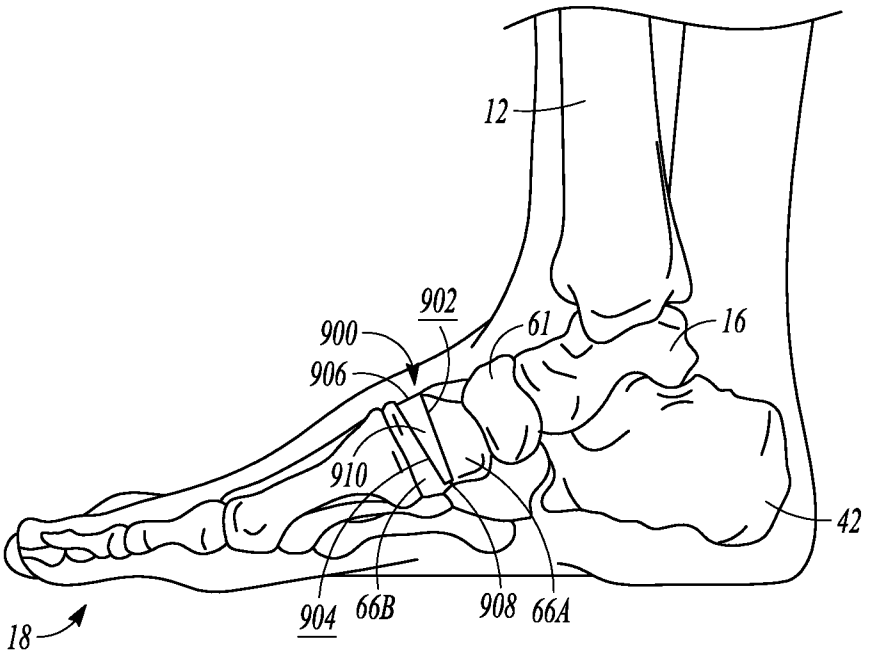

FIG. 12A

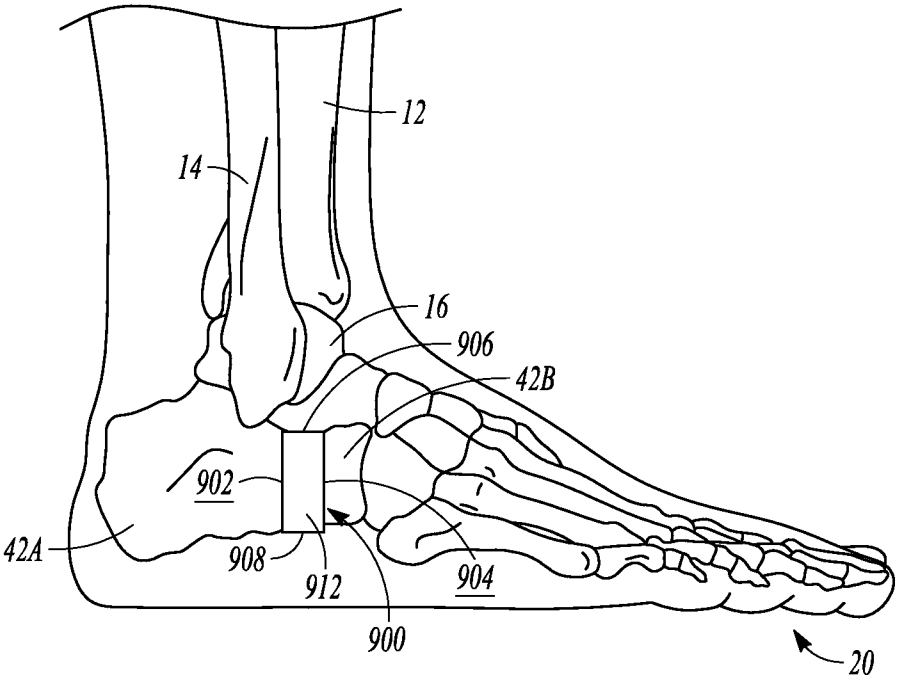

FIG. 12B

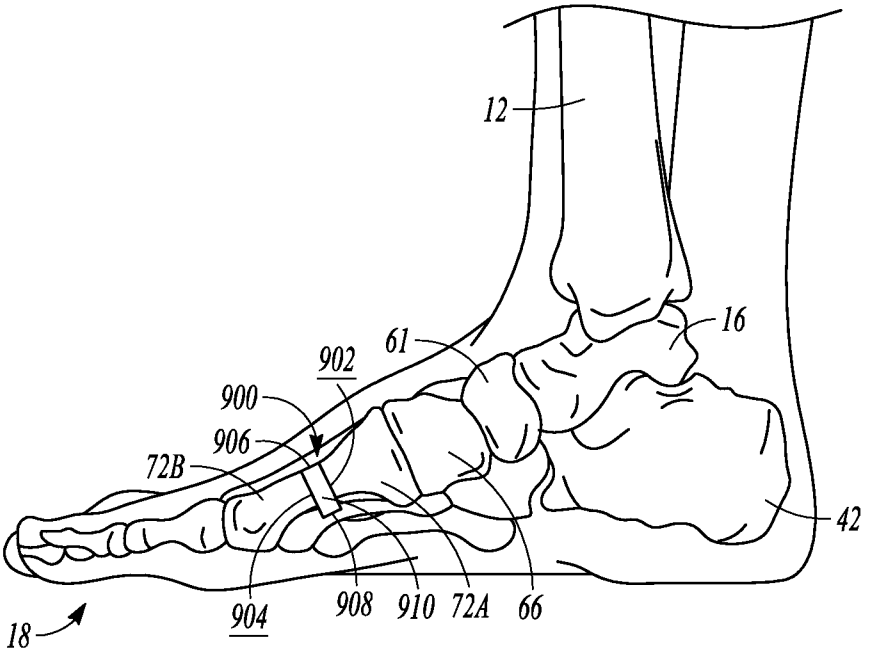

FIG. 12C

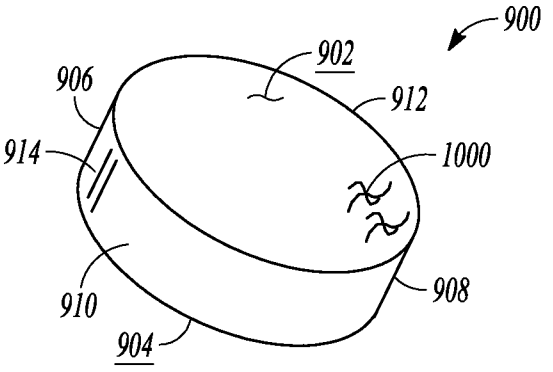

FIG. 12D

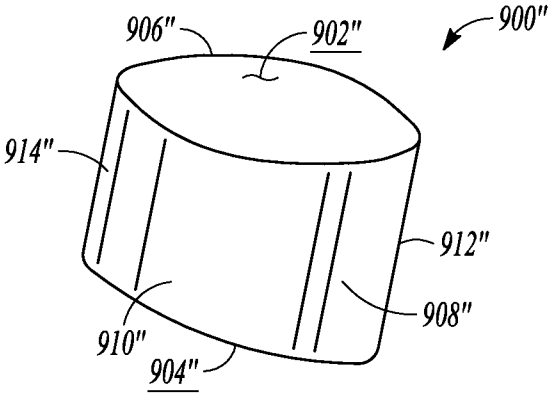

FIG. 12E

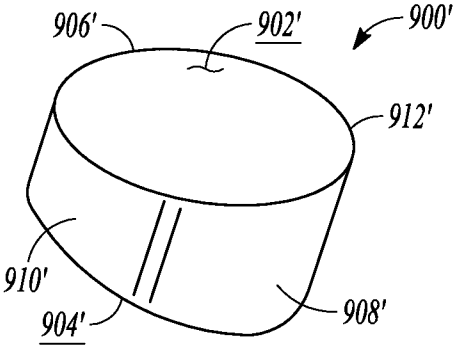

FIG. 12F

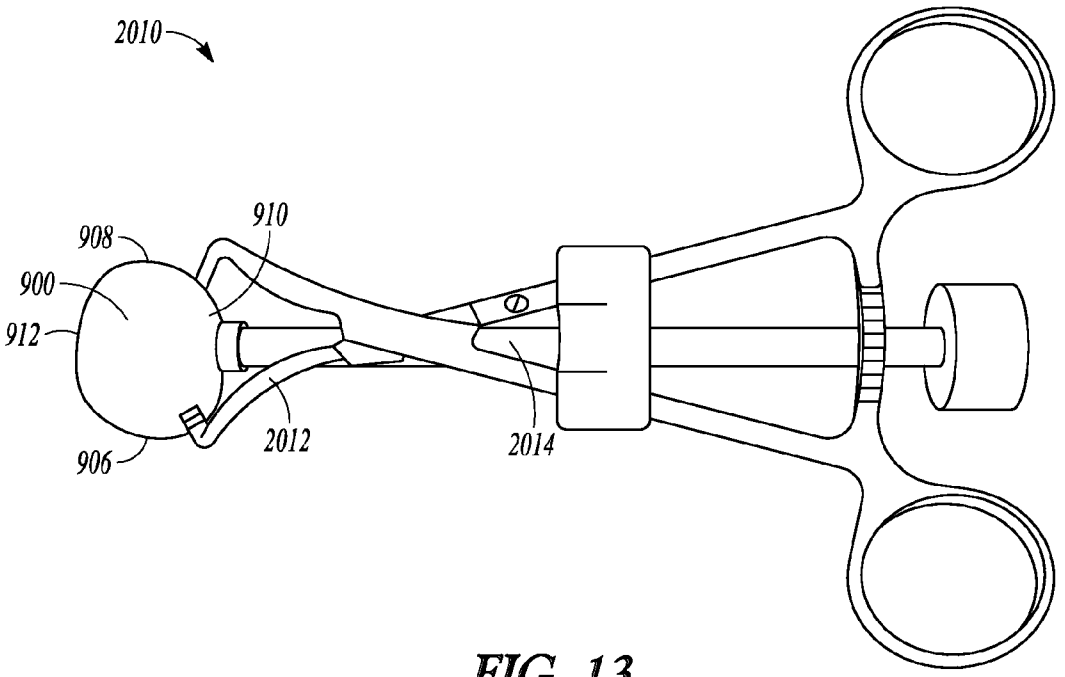

FIG. 13

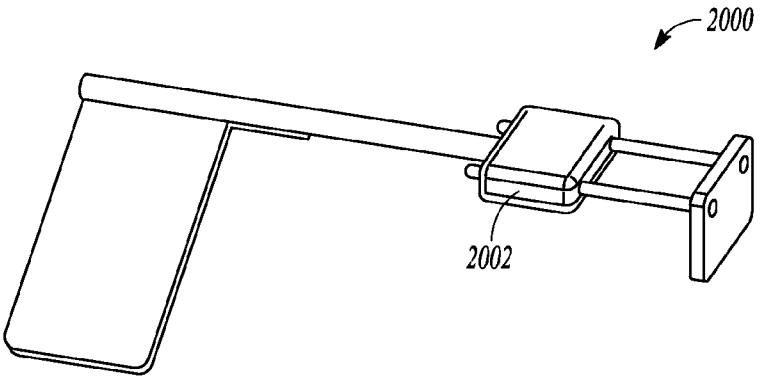

FIG. 14

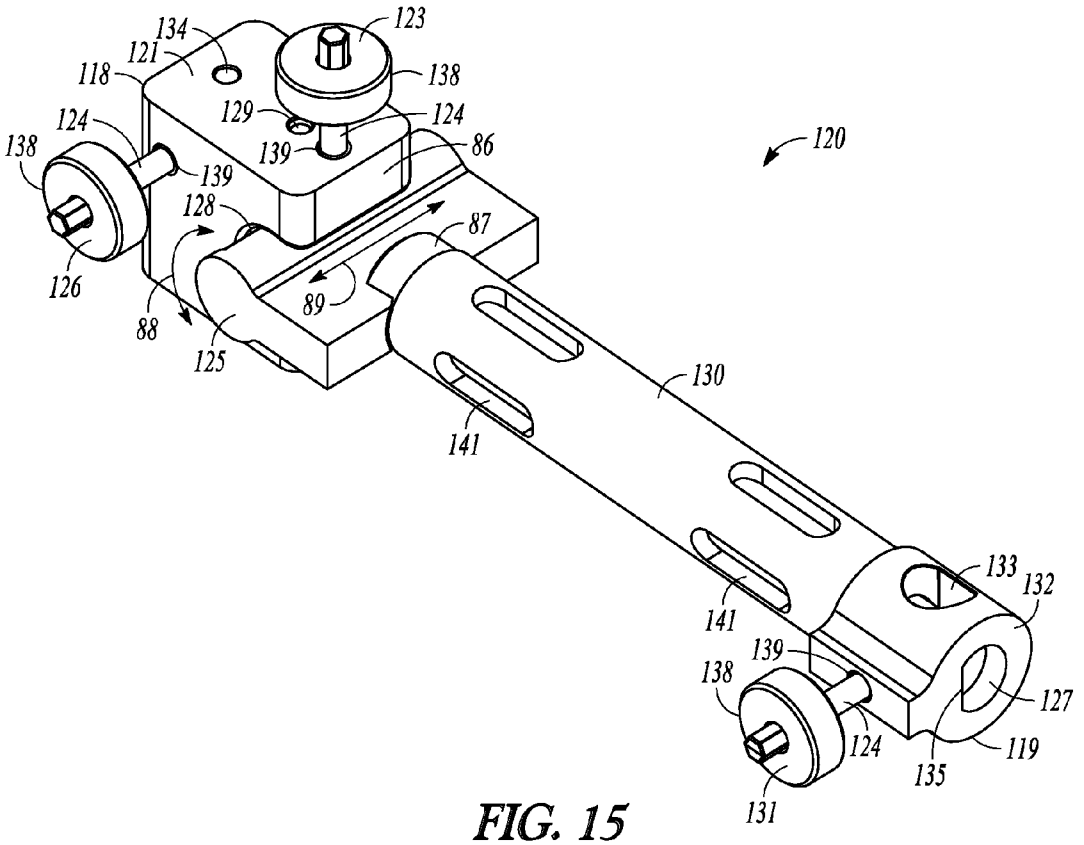
134
123
121
118
138
129
124
124
138
139
86
120
139
128
87
126
89
88
125
130
141
133
132
141
139
138
127
124
119
135
131

FIG. 15

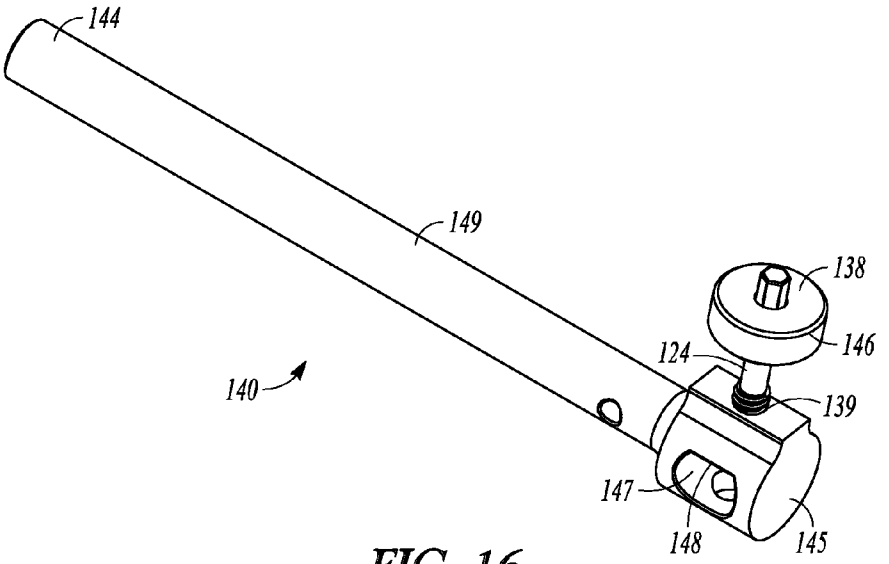
144
149
138
146
124
140
139
147
148
145

FIG. 16

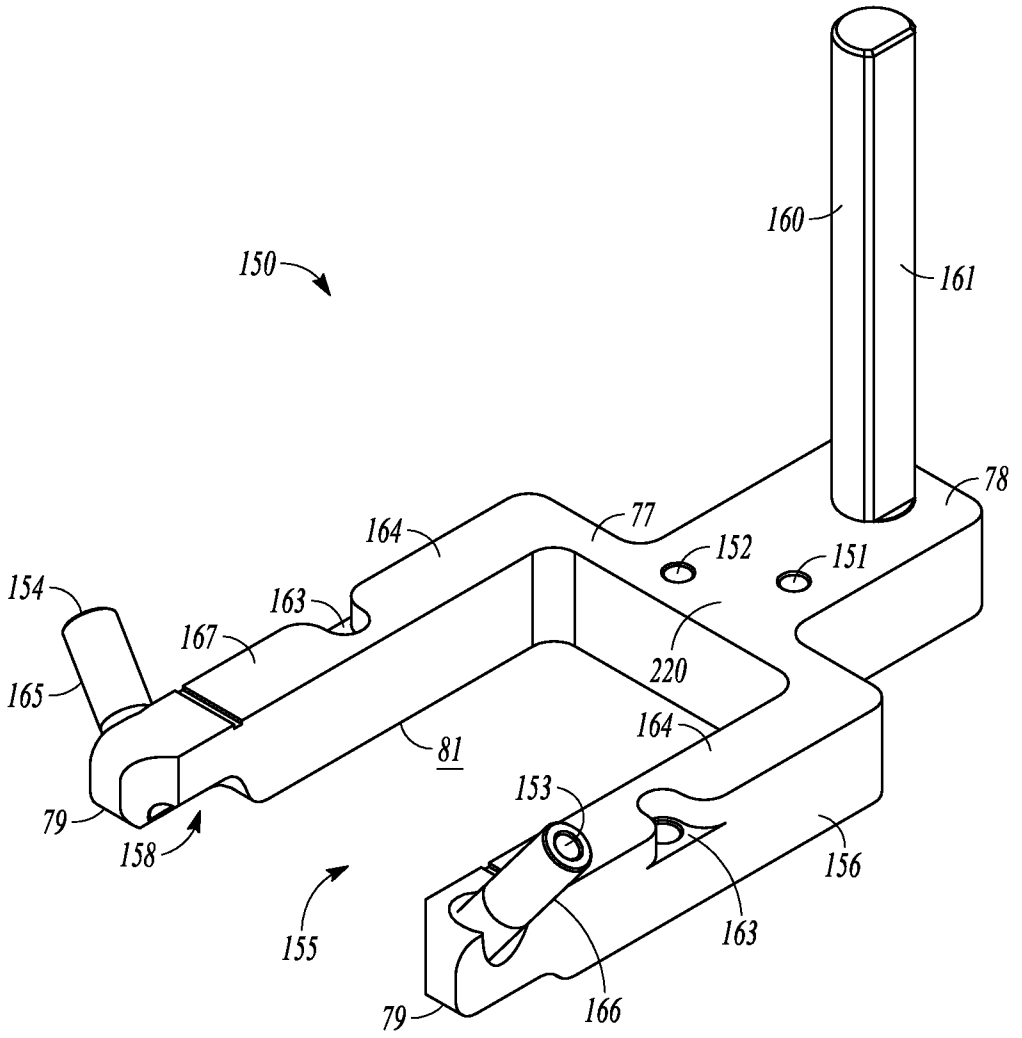
150
160
161
78
77
164
152
151
154
163
167
220
165
164
81
153
79
158
156
155
163
166
79

FIG. 17

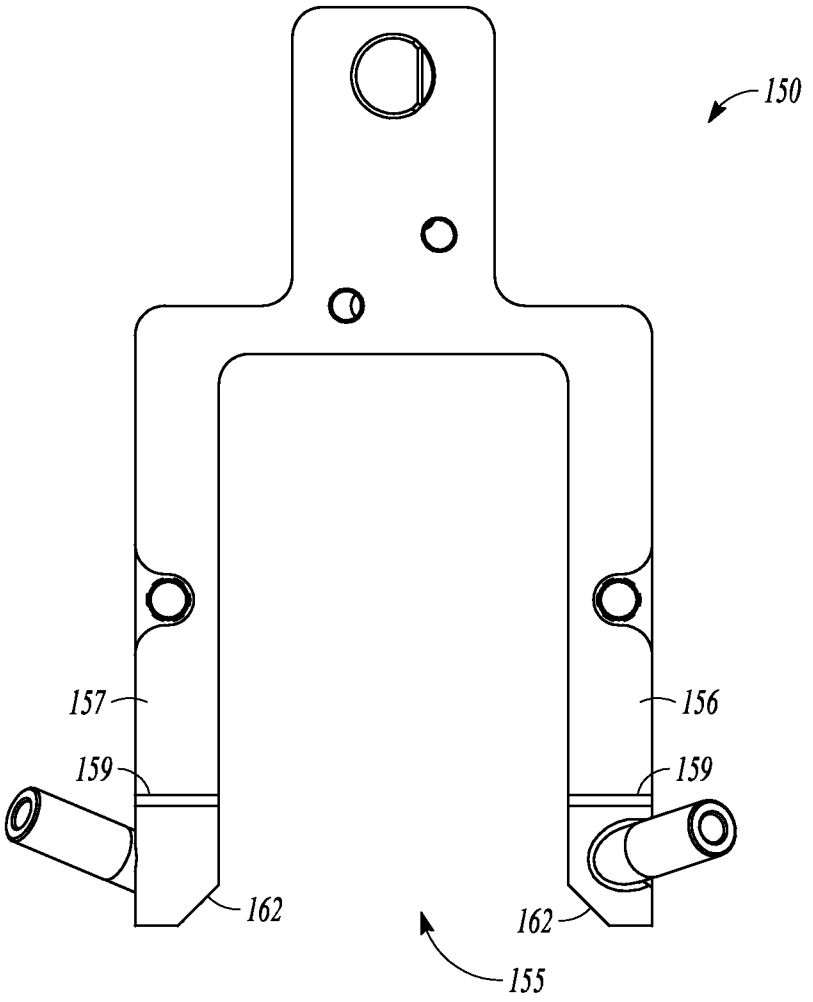

FIG. 18

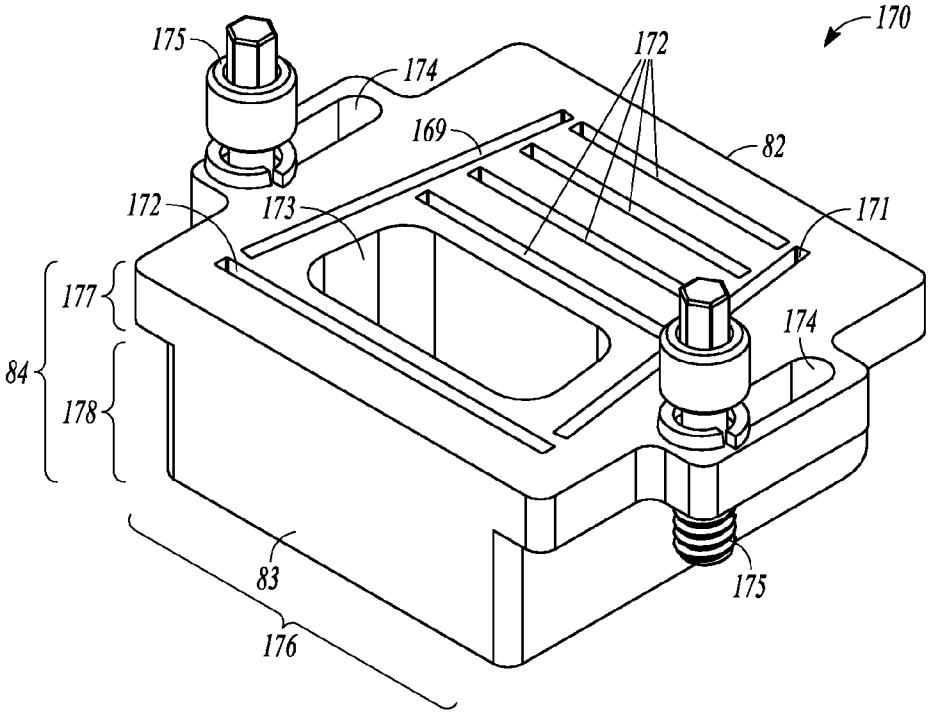
170
175
174
172
169
82
172
173
171
177
84
178
174
83
175
176

FIG. 19

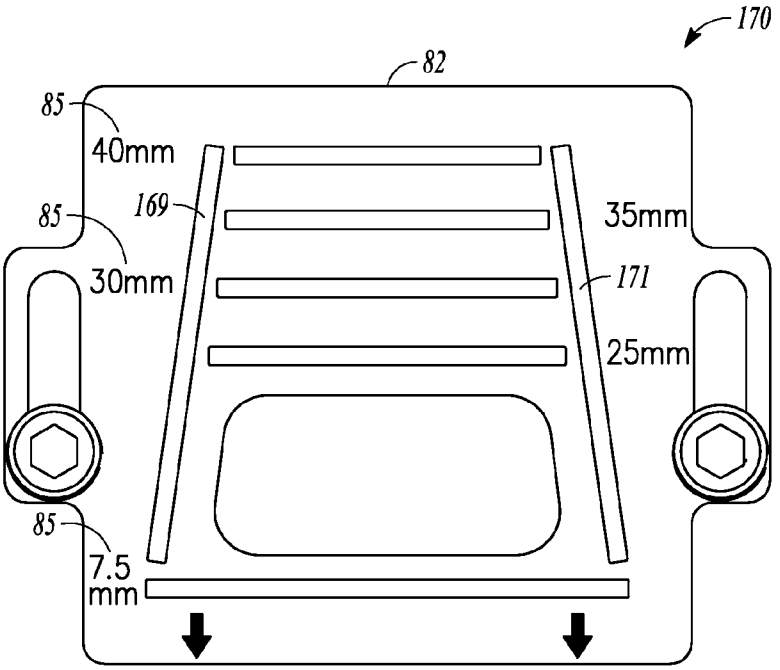
170
82
85
40mm
169
35mm
85
30mm
171
25mm
85
7.5
mm

FIG. 20

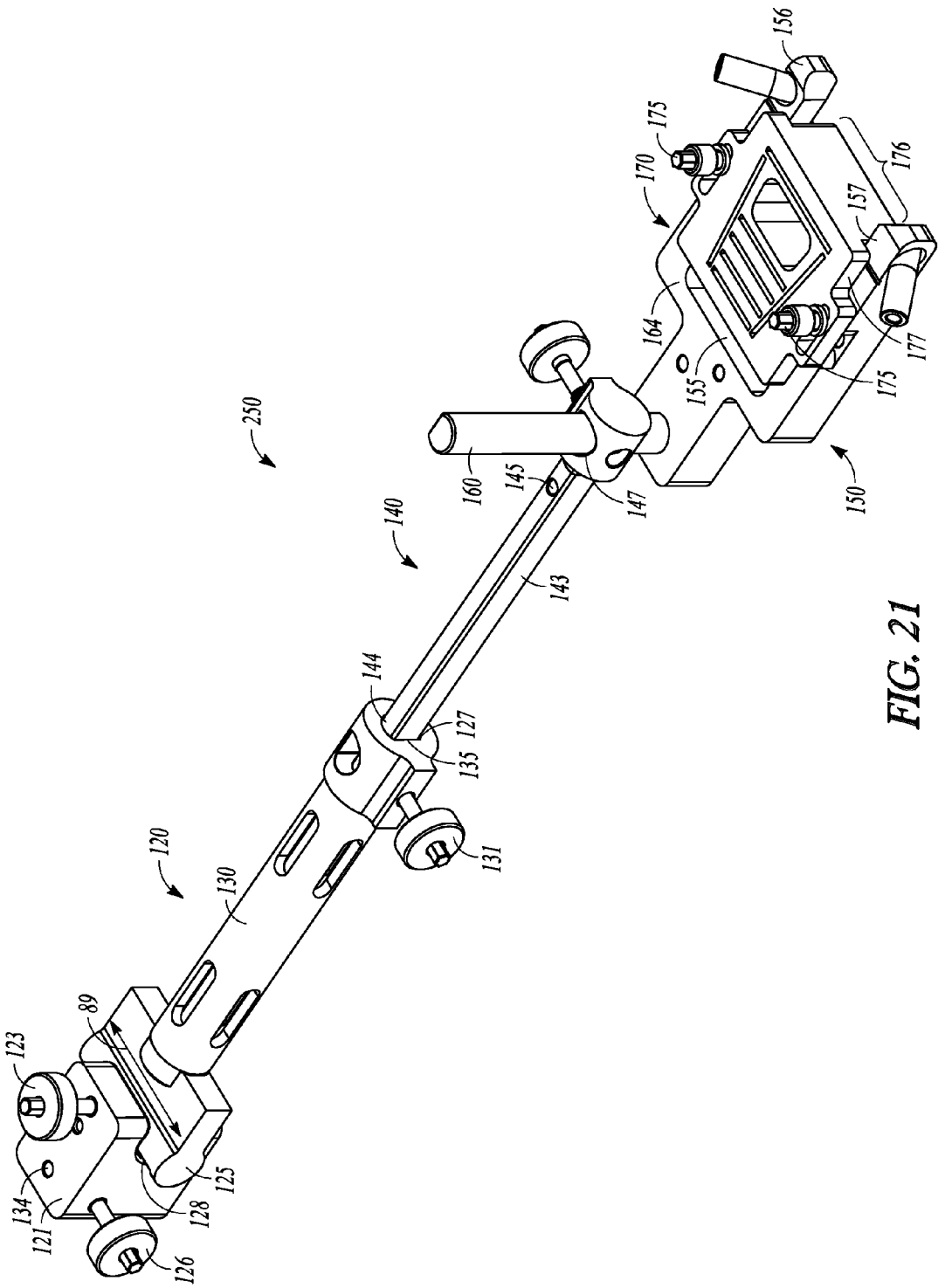
156
175
170
176
157
164
177
155
175
250
160
145
147
150
140
143
144
127
135
131
120
130
89
123
125
134
128
121
126

FIG. 21

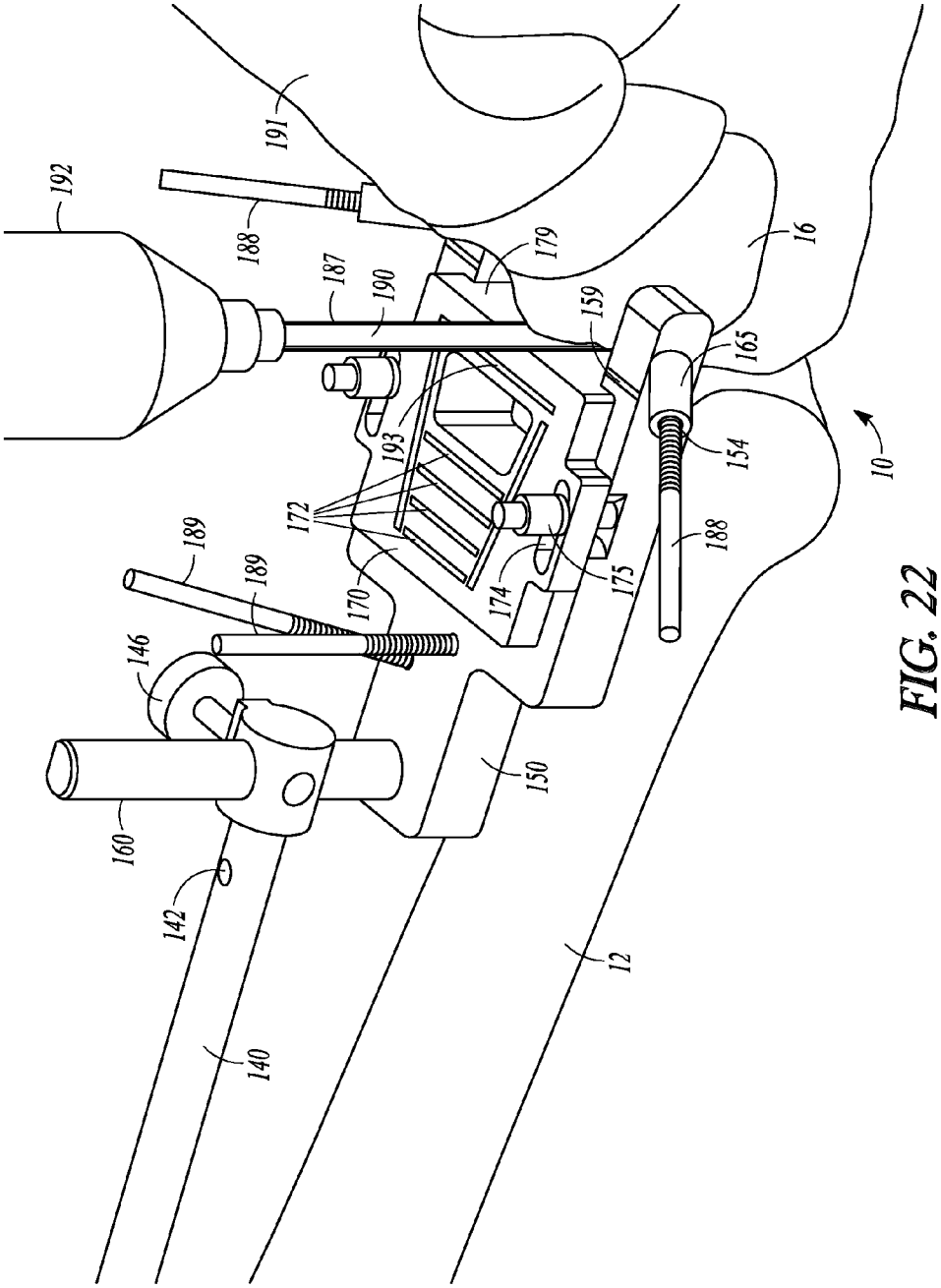
192
191
188
187
190
179
159
16
165
154
10
188
175
174
170
172
193
189
189
146
160
142
140
150
12

FIG. 22

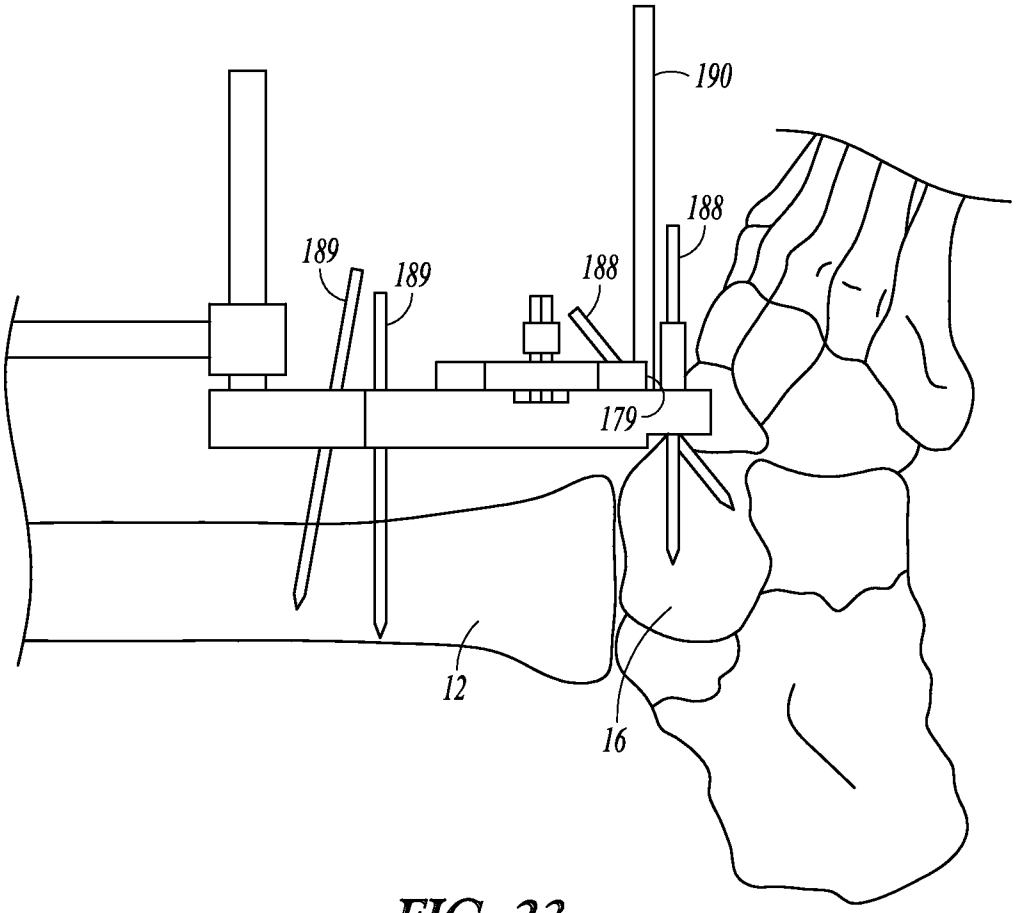

FIG. 23

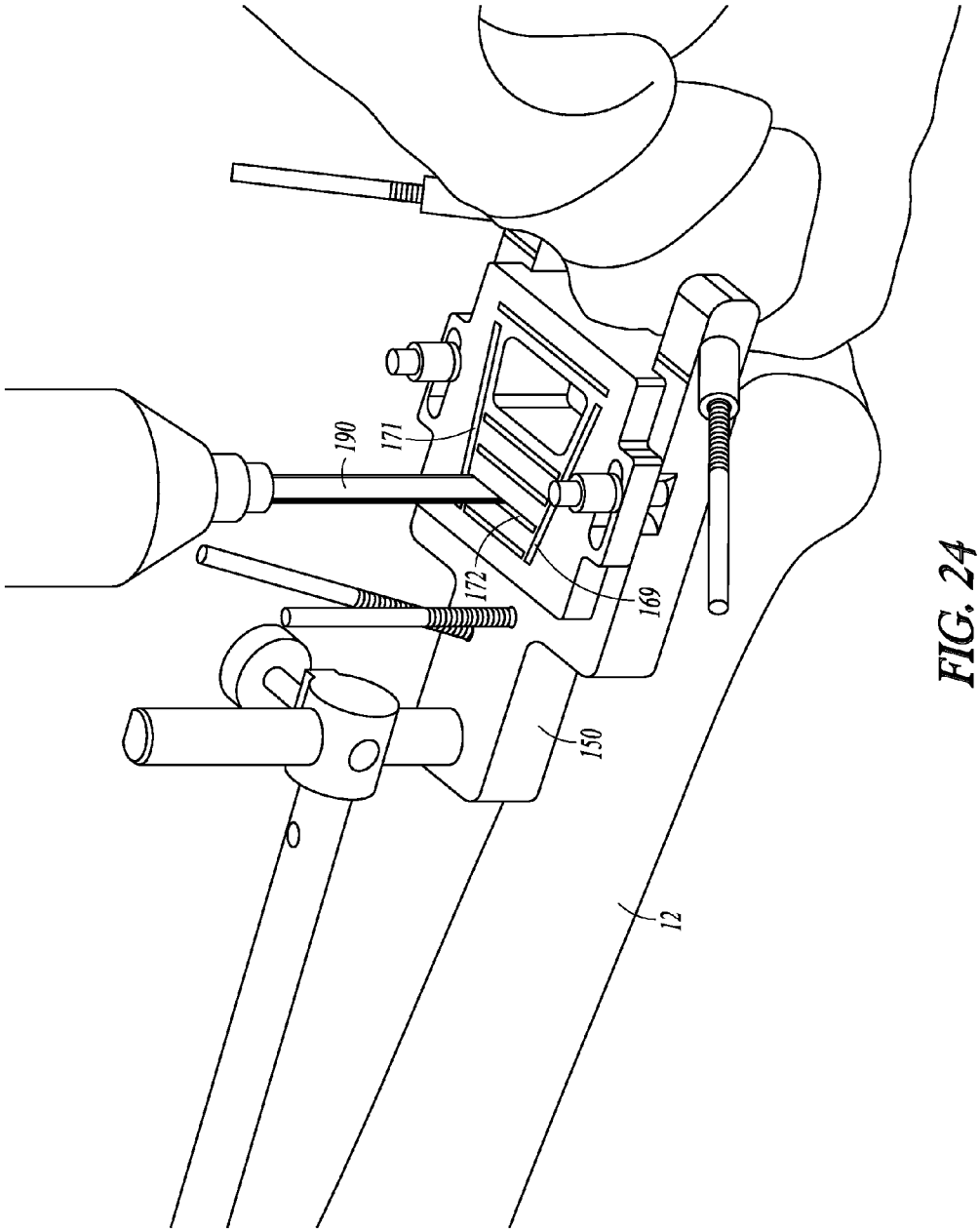

FIG. 24

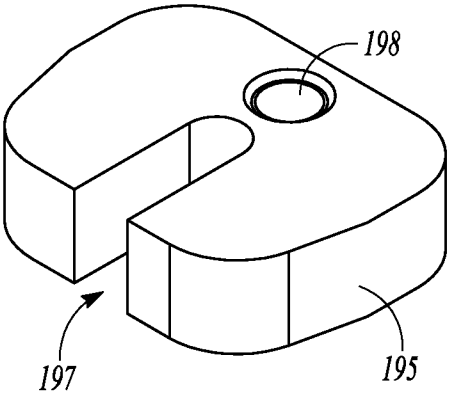

FIG. 25

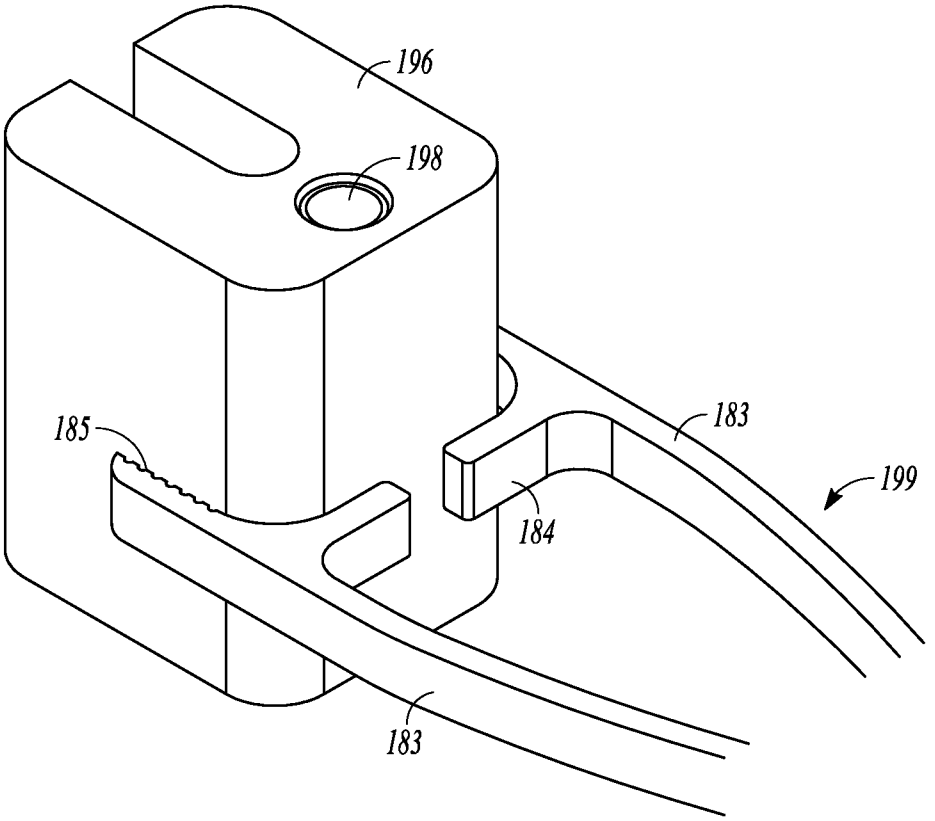

FIG. 26

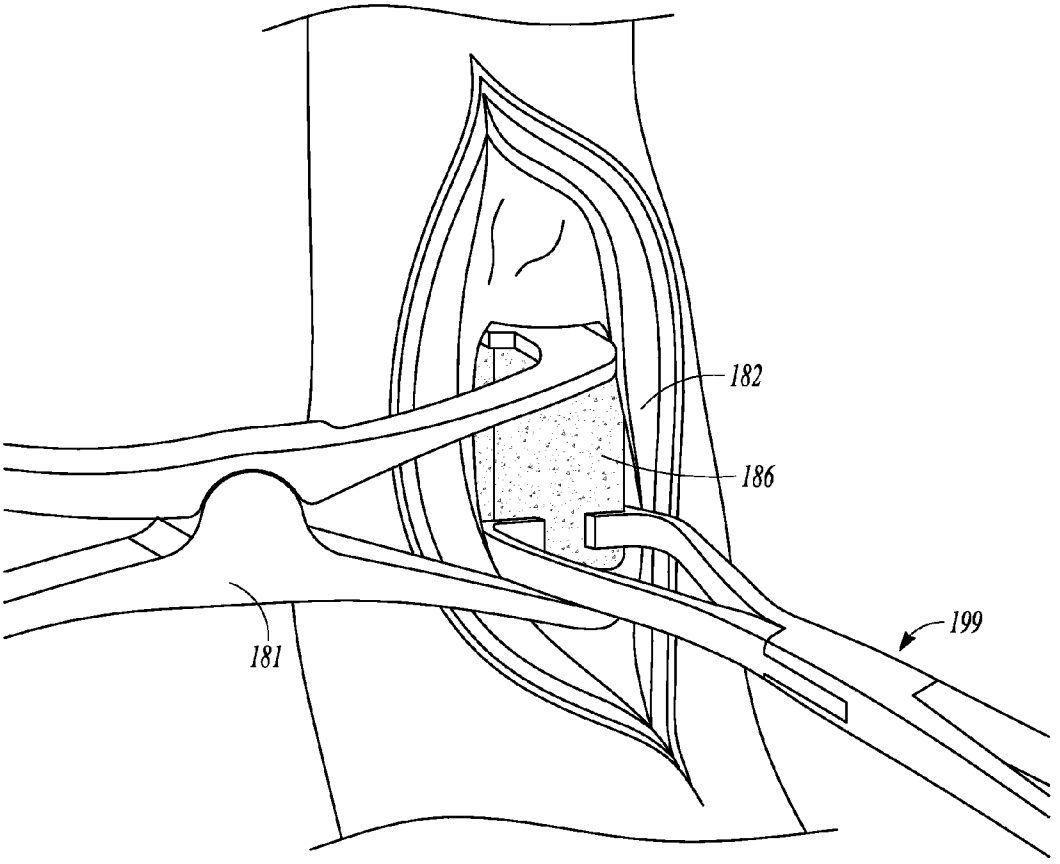

FIG. 27

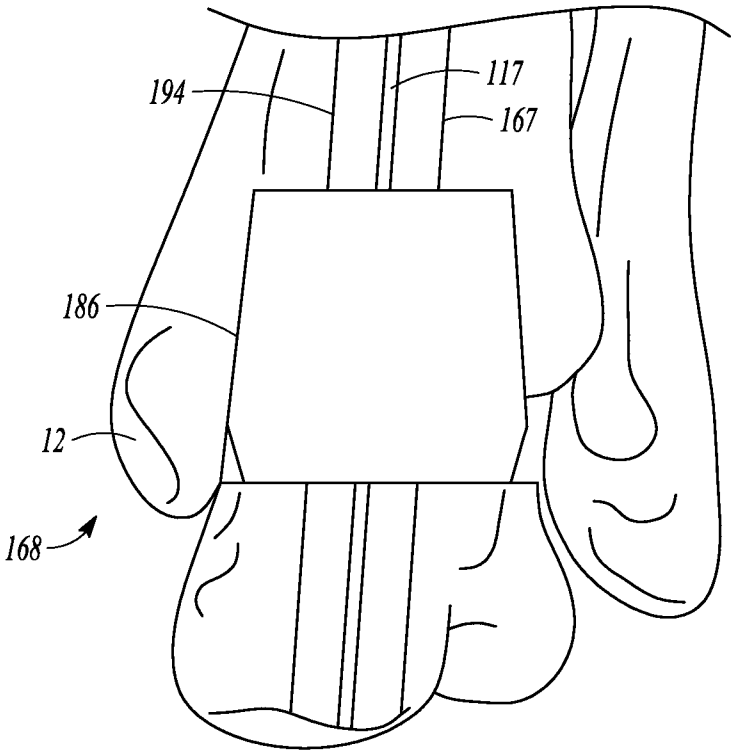

FIG. 28

POROUS SPACERS, INSTRUMENTS, AND METHODS FOR FOOT AND ANKLE FUSION

CLAIM OF PRIORITY

This application is a U.S. National Stage Filing under 35 U.S.C. 371 of International Patent Application Number PCT/US2013/037758, filed Apr. 23, 2013, and published as WO 2013/169475 A1 which claims the benefit of U.S. Provisional Patent Application Ser. No. 61/644,214, filed on May 8, 2012, both of which are incorporated by reference herein in its entirety.

FIELD OF THE DISCLOSURE

The present disclosure relates to foot and ankle fusion. More particularly, the present disclosure relates to porous spacers for foot and ankle fusion, and to instruments and methods for performing the same.

BACKGROUND OF THE DISCLOSURE

Bone grafts are generally used for foot and ankle fusion procedures. However, bone grafts have limited strength. Because the ankle or foot must support a patient's body weight, the bone graft may become physically overloaded when implanted in this part of a patient's body. Also, bone grafts may require intra-operative, custom shaping, which is time consuming and not readily reproducible.

SUMMARY

The present disclosure provides, in certain aspects, porous spacers for foot and ankle fusion. The porous spacers disclosed herein may be implanted between separate bones of a joint or between two segments of a single bone following an osteotomy procedure. The spacers can be used in conjunction with ancillary fixation devices such as intramedullary nails and/or bone plates. Another aspect of the present disclosure provides a bone resectioning system. The resectioning system can include a resection guide and a resection frame. When utilized in an ankle procedure, the resectioning system can be anchored to a proximal tibia and positioned over an ankle joint. After securing the resection frame-resection guide combination over the ankle joint, the talus and tibia can be resected using one or more cutting slots, surfaces, or guides of the resection guide. After making one or more cuts, the resection guide, which is situated over an opening in the resection frame, can be moved away from this opening allowing a surgeon to check the fit of a fusion spacer or provisional spacer while the resection frame is still secured to bone. After checking a fit, if more bone needs to be cut, the surgeon simply moves the resection guide back into position over the opening in the resection frame or replaces it with a different guide that may now be deemed more suitable to continue the procedure. This method of resection can be performed on various joints and bones in the anatomy.

According to an embodiment of the present disclosure, a method is provided for fusing a patient's joint. The joint includes a first bone having a first joint surface and a second bone having a second joint surface that articulates with the first joint surface. The method includes the steps of: resecting the first joint surface of the first bone of the joint, the first bone being anatomically located in the patient's foot or ankle; resecting the second joint surface of the second bone of the joint; and implanting a fusion spacer between the resected first and second bones to fuse the first and second bones, wherein the fusion spacer is constructed of a metal-coated scaffold.

According to another embodiment of the present disclosure, a method is provided for fusing a bone cut during an osteotomy procedure. Such a method can be used in conjunction with any suitable osteotomy procedure including those involving removing a segment of a bone, making a cut to divide the bone or cutting a bone to change the angle or axis of a bone. The method includes the steps of: resecting a bone into a first bone segment and a second bone segment, for example where the bone is anatomically located in the patient's foot or ankle; and implanting a fusion spacer between the resected first and second bone segments to fuse the first and second bone segments, wherein the fusion spacer in one particular illustrative aspect is constructed of a metal-coated scaffold.

According to another embodiment of the present disclosure, a method is provided for fusing a patient's ankle joint to fill bone voids such as following removal of a prosthetic tibial component from the patient's tibia and removal of a prosthetic talar component from the patient's talus. The method includes the steps of: providing a fusion spacer having a proximal surface, a distal surface, a substantially flat anterior wall, a substantially flat posterior wall, a substantially flat medial wall, and a substantially flat lateral wall, the substantially flat walls cooperating to define a block-shaped fusion spacer; and implanting the fusion spacer between the patient's tibia and the patient's talus into a space once occupied by the prosthetic tibial component and the prosthetic talar component with the proximal surface of the fusion spacer contacting the patient's tibia and the distal surface of the fusion spacer contacting the patient's talus.

According to another embodiment of the present disclosure, a fusion spacer is provided including a metal-coated scaffold having a proximal surface, a distal surface, and at least one outer wall between the proximal surface and the distal surface, the at least one outer wall widening distally from the proximal surface to an apex and narrowing distally from the apex to the distal surface.

According to another embodiment of the present disclosure, a fusion spacer is provided including a metal-coated scaffold having a first bone-contacting surface and a second bone-contacting surface, at least one of the first and second bone-contacting surfaces having a concave curvature to engage a convex bone surface.

According to another embodiment of the present disclosure a resectioning device is provided including a resection guide and a resection frame. The resection frame is configured to be attached to a bone for an osteotomy or attached to opposing bones of a joint. The resection guide is coupled to the resection frame and includes one or more cutting slots.

According to another embodiment of the present disclosure an ankle joint resectioning system is provided including an anchor assembly, a resection frame and a resection guide. The resection frame can be attached to the distal end of the tibia as well as to the talus. The resection guide can be coupled to the resection frame and can include one or more cutting slots.

According to another embodiment of the present disclosure a method of resecting bone is provided. In one step, a resection frame is positioned over bone. In another step, a resection guide is coupled to the resection frame. Thereafter, a bone cutting element is passed through a first cutting slot in the resection guide and through an opening in the resection

frame to make a cut in underlying bone. The resection guide can include one or more cutting slots through which the bone cutting element passes.

According to another embodiment of the present disclosure a method for placing a bone implant or a provisional bone implant is provided. In one step, a resection frame is anchored to bone where the resection frame includes an opening through which the bone implant or the provisional bone implant can pass. In another step, a resection guide is positioned over the opening in the resection frame where such positioning blocks passage of the bone implant or the provisional bone implant through the opening in the resection frame while allowing passage of a bone cutting element through the resection guide and through the opening in the resection frame to cut underlying bone. Thereafter, a space is created for the bone implant or the provisional bone implant which includes passing a bone cutting element through a first cutting slot in the resection guide and through the opening in the resection frame and into underlying bone. The resection guide can then be repositioned with respect to the opening in the resection frame such that the bone implant or the provisional bone implant can be passed through the opening in the resection frame. The method can also include passing the bone implant or the provisional bone implant through the opening in the resection frame and into the space.

To better understand the porous spacers, instruments, and methods for foot and ankle fusion disclosed herein, a non-limiting list of examples is provided here:

In Example 1, an ankle resection system can comprise a resection frame and a resection guide and optionally a proximal tibial anchor. The resection frame is anchorable to the distal tibia and/or the talus and provides an opening through which a bone cutting element can pass for cutting underlying bone. When present, the proximal tibial anchor can be connected to the resection frame. The resection guide can include one or more cutting slots, and the resection guide can be coupled to the resection frame with the one or more cutting slots positioned over the opening in the resection frame so that the bone cutting element can pass through the one or more cutting slots and through the opening in the resection frame for cutting the distal tibia and/or the talus.

In Example 2, the ankle resection system of Example 1 can optionally be configured such that the resection frame being connected to the proximal tibial anchor comprises a separate elongated rod coupled to the proximal tibial anchor and the resection frame.

In Example 3, the ankle resection system of Example 2 can optionally be configured such that the proximal tibial anchor includes a hollow tubular section in which a proximal end of the elongated rod is slidably received to permit adjustment of the distance between the proximal tibial anchor and the resection frame.

In Example 4, the ankle resection system of any one or any combination of Examples 2 or 3 can optionally be configured such that a proximal end of the elongated rod is coupled to the proximal tibial anchor so as to permit adjustment of the proximal end in a medial-lateral direction with respect to the proximal tibial anchor.

In Example 5, the ankle resection system of any one or any combination of Examples 2-4 can optionally be configured such that a distal end of the elongated rod is coupled to the resection frame so as to permit adjustment of the distal end in an anterior-posterior direction with respect to the resection frame.

In Example 6, the ankle resection system of any one or any combination of Examples 1-5 can optionally be configured such that the resection guide and the resection frame are translatable relative to one another in a longitudinal direction for repositioning the one or more cutting slots over the opening in the resection frame.

In Example 7, the ankle resection system of Example 6 can optionally be configured such that the one or more cutting slots includes a medial cutting slot and a lateral cutting slot.

In Example 8, the ankle resection system of any one or any combination of Examples 1-7 can optionally be configured such that the resection frame comprises a first talus pin aperture with a longitudinal axis that extends in a direction non-parallel to a longitudinal axis of a second talus pin aperture.

In Example 9, the ankle resection system of any one or any combination of Examples 1-8 can optionally be configured such that the resection frame includes a proximal body portion with a medial leg and a lateral leg of the resection frame extending from the proximal body portion, and with the opening in the resection frame extending between the medial leg and the lateral leg.

In Example 10, the ankle resection system of Example 9 can optionally be configured such that the resection guide extends over the medial leg and the lateral leg with a posterior body portion of the resection guide extending down into the opening in the resection frame.

In Example 11, a method for resecting bone comprises positioning a resection frame over bone, the resection frame including an opening through which a bone cutting element can pass; coupling a resection guide to the resection frame, the resection guide including one or more cutting slots through which the bone cutting element can pass; and passing a bone cutting element through a first cutting slot in the resection guide and through the opening in the resection frame to make a cut in underlying bone.

In Example 12, the method of Example 11 can optionally further comprise anchoring the resection frame to bone.

In Example 13, the method of Example 12 can optionally be configured such that the coupling occurs after the anchoring.

In Example 14, the method of any one or any combination of Examples 12 or 13 can optionally be configured such that the resection guide is decoupled from the resection frame with the resection frame remaining anchored to bone.

In Example 15, the method of Example 14 can optionally be configured such that the resection guide being decoupled from the resection frame uncovers the opening in the resection frame to permit a bone implant or a provisional bone implant to pass through the opening in the resection frame for placement in underlying bone.

In Example 16, the method of any one or any combination of Examples 11-15 can optionally be configured such that the cut in underlying bone occurs on a first side of a joint, and wherein a further cut in underlying bone is made on a second side of the joint.

In Example 17, the method of Example 16 can optionally be configured such that the joint is an ankle joint.

In Example 18, the method of Example 17 can optionally further comprise connecting the resection frame to a proximal tibial anchor.

In Example 19, a method for placing a bone implant or a provisional bone implant, comprises anchoring a resection frame to bone, the resection frame including an opening through which the bone implant or the provisional bone implant can pass; positioning a resection guide over the opening in the resection frame, the positioning blocking passage of the bone implant or the provisional bone implant through the opening in the resection frame while allowing passage of a bone cutting element through the resection guide and through the opening in the resection frame to cut underlying bone;

creating a space for the bone implant or the provisional bone implant which includes passing a bone cutting element through a first cutting slot in the resection guide and through the opening in the resection frame and into underlying bone; repositioning the resection guide with respect to the opening in the resection frame such that the bone implant or the provisional bone implant can be passed through the opening in the resection frame; and passing the bone implant or the provisional bone implant through the opening in the resection frame and into the space.

In Example 20, the method of Example 19 can optionally be configured such that the positioning includes reversibly locking the resection guide to the resection frame.

In Example 21, the method of Example 20 can optionally be configured such that the reversibly locking occurs before the anchoring.

In Example 22, the method of any one or any combination of Examples 20-21 can optionally be configured such that the repositioning includes unlocking and separating the resection guide from the resection frame.

In Example 23, the method of any one or any combination of Examples 19-22 can optionally be configured such that the resection frame includes a proximal body portion with a medial leg and a lateral leg of the resection frame extending from the proximal body portion, and with the opening in the resection frame extending between the medial leg and the lateral leg.

In Example 24, the method of any one or any combination of Examples 19-23 can optionally be configured such that the space is situated around an ankle joint.

BRIEF DESCRIPTION OF THE DRAWINGS

The above-mentioned and other features and advantages of this disclosure, and the manner of attaining them, will become more apparent and the invention itself will be better understood by reference to the following description of embodiments of the invention taken in conjunction with the accompanying drawings, wherein:

FIG. **1** is an anterior elevational view of a patient's healthy ankle joint;

FIG. **2** is an anterior elevational view of a patient's ankle joint with screws implanted therein to fuse the ankle joint;

FIG. **3**A is an anterior elevational view of a patient's resected ankle joint;

FIG. **3**B is an anterior elevational view of the resected ankle joint of FIG. **3**A with a first exemplary fusion spacer implanted therein to fuse the ankle joint;

FIG. **3**C is a proximal plan view of the first fusion spacer of FIG. **3**B;

FIG. **3**D is a perspective view of another fusion spacer that is similar to the first fusion spacer of FIG. **3**C;

FIG. **4** is an anterior elevational view of a patient's ankle joint with a prosthetic tibial component and a prosthetic talar component implanted therein;

FIG. **5**A is an anterior elevational view of the patient's ankle joint after removal of the prosthetic tibial component and the prosthetic talar component of FIG. **4**;

FIG. **5**B is an anterior elevational view of the ankle joint of FIG. **5**A with a second exemplary fusion spacer implanted therein to fuse the ankle joint;

FIG. **5**C is a perspective view of the second fusion spacer of FIG. **5**B;

FIGS. **5**D-**5**G are perspective views of other fusion spacers that can be used in a similar manner as the second fusion spacer of FIG. **5**C;

FIG. **6** is a lateral elevational view of a patient's subtalar joint with screws implanted therein to fuse the subtalar joint;

FIG. **7**A is a perspective view of a patient's resected subtalar joint;

FIG. **7**B is a perspective view of the resected subtalar joint of FIG. **7**A with a third exemplary fusion spacer implanted therein to fuse the subtalar joint;

FIG. **7**C is a proximal perspective view of the third fusion spacer of FIG. **7**B;

FIG. **7**D is a distal perspective view of the third fusion spacer of FIG. **7**B;

FIG. **7**E is a perspective view of a fourth exemplary fusion spacer;

FIG. **8**A is a posterior elevational view of a patient's subtalar joint with a fifth exemplary fusion spacer implanted therein to fuse the subtalar joint;

FIG. **8**B is a perspective view of the fifth fusion spacer of FIG. **8**A;

FIG. **9**A is a proximal perspective view of a patient's talonavicular joint with a sixth exemplary fusion spacer implanted therein to fuse the talonavicular joint;

FIG. **9**B is a perspective view of the sixth fusion spacer of FIG. **9**A;

FIGS. **10**A and **10**B are elevational views of various joints in a patient's foot with a seventh exemplary fusion spacer implanted therein to fuse the joints;

FIG. **10**C is a perspective view of the seventh fusion spacer of FIGS. **10**A and **10**B.

FIGS. **11**A-**11**B are elevational views of various joints in a patient's foot with an eighth exemplary fusion spacer implanted therein to fuse the joints;

FIG. **11**C is a perspective view of the eighth fusion spacer of FIGS. **11**A-**11**B.

FIGS. **12**A-**12**C are elevational views of various osteotomized bones in a patient's foot with a ninth exemplary fusion spacer implanted therein to fuse the osteotomized bones;

FIG. **12**D is a perspective view of the ninth exemplary fusion spacer of FIGS. **12**A-**12**C;

FIGS. **12**E-**12**F are perspective views of other fusion spacers that can be used in a similar manner as the ninth fusion spacer of FIG. **12**D;

FIG. **13** is a perspective view of an insertion and extraction tool; and

FIG. **14** is a perspective view of a cutting tool.

FIG. **15** is a perspective view of an anchor assembly.

FIG. **16** is a perspective view of an extension rod.

FIG. **17** is a perspective view of a resection frame.

FIG. **18** is a top view of a resection frame.

FIG. **19** is a perspective view of a resection guide.

FIG. **20** is a top view of a resection guide.

FIG. **21** is a perspective view of an ankle joint resection system.

FIG. **22** is a perspective view of a talus cut.

FIG. **23** is an illustration of an x-ray of pins attaching a resection frame to bones in a foot.

FIG. **24** is a perspective view of a tibial cut.

FIG. **25** is a perspective view of a provisional spacer.

FIG. **26** is a perspective view of an insertion tool holding a provisional spacer.

FIG. **27** is a perspective view of installation of a fusion spacer using a distractor tool and an insertion tool.

FIG. **28** is an illustration of an x-ray of an intramedullary nail and fusion spacer.

Corresponding reference characters indicate corresponding parts throughout the several views. The exemplifications set out herein illustrate exemplary embodiments of the inven-

tion and such exemplifications are not to be construed as limiting the scope of the invention in any manner.

DETAILED DESCRIPTION

The present disclosure relates to spacers for foot and ankle fusion. Each fusion spacer is anatomically shaped for implantation in a particular anatomic location of the foot or ankle Each spacer shape may be available in different sizes (e.g., different anterior-posterior dimensions, different medial-lateral dimensions, different superior-inferior dimensions) to accommodate a variety of different patients.

1. Highly Porous Construction

According to an exemplary embodiment of the present disclosure, the fusion spacers of the present disclosure are constructed of a highly porous biomaterial. A highly porous biomaterial is useful as a bone substitute and as cell and tissue receptive material. A highly porous biomaterial may have a porosity as low as 55%, 65%, or 75% or as high as 80%, 85%, or 90%.

An example of such a material is produced using Trabecular Metal™ Technology generally available from Zimmer, Inc., of Warsaw, Ind. Trabecular Metal™ is a trademark of Zimmer, Inc. Such a material may be a metal-coated scaffold that is formed from a reticulated vitreous carbon foam scaffold or substrate which is infiltrated and coated with a biocompatible metal, such as tantalum, by a chemical vapor deposition ("CVD") process in the manner disclosed in detail in U.S. Pat. No. 5,282,861 to Kaplan and U.S. Pat. No. 6,103,149 to Stankiewicz, the entire disclosures of which are expressly incorporated herein by reference. In addition to tantalum, other metals such as niobium, or alloys of tantalum and niobium with one another or with other metals may also be used.

An exemplary porous tantalum material **1000** is shown in FIG. **3**B. Generally, the porous tantalum material **1000** includes a large plurality of ligaments **1002** defining open spaces or pores **1004** there between, with each ligament **1002** generally including a carbon core covered by a thin film of metal such as tantalum, for example. The open spaces **1004** between the ligaments **1002** form a matrix of continuous channels having no dead ends, such that growth of cancellous bone through the porous tantalum structure **1000** is uninhibited. The porous tantalum structure **1000** may include up to 75%, 85%, or more void space therein. Thus, the porous tantalum structure **1000** may be substantially uniform and consistent in composition and may closely resemble the structure of natural cancellous bone, thereby providing a matrix into which cancellous bone may grow to provide fixation of the fusion spacer to the patient's bone.

The porous tantalum structure **1000** may be made in a variety of densities in order to selectively tailor the structure for particular applications. In particular, as discussed in the above-incorporated U.S. Pat. No. 5,282,861, the porous tantalum structure **1000** may be fabricated to virtually any desired porosity and pore size, and can thus be matched with the surrounding natural bone in order to provide an improved matrix for bone ingrowth and mineralization.

In addition to providing a matrix for bone ingrowth, the metal-coated ligaments **1002** of the porous tantalum structure **1000** provide a permanent source of strength and support to the bone. The metal-coated ligaments **1002** do not degrade or absorb into the body, but rather the metal-coated ligaments **1002** remain intact to support the bone. Although strong, the porous tantalum structure **1000** is also lightweight.

The porous tantalum structure **1000** is also readily shapeable. In one embodiment, the reticulated vitreous carbon foam substrate is shaped before being infiltrated and coated with metal, such as by crushing the substrate in a mold. In another embodiment, the material is shaped after being infiltrated and coated with metal, such as by machining. These shaping processes may be performed preoperatively and under automatic or controlled conditions.

Bone growth factors, therapeutic agents, medications, and other materials may be incorporated into the porous tantalum structure **1000** to promote healing and bone fusion. An example of such a material is the CopiOs® Bone Void Filler which is available from Zimmer, Inc., of Warsaw, Ind. CopiOs® is a registered trademark of Zimmer, Inc. Other suitable materials are described in U.S. Pat. No. 5,290,763 to Poser et al., U.S. Pat. No. 7,718,616 to Thorne, and U.S. Patent Application Publication No. 2011/0165199 to Thorne, the entire disclosures of which are expressly incorporated herein by reference.

2. Joint Spacers

In one embodiment, the fusion spacers disclosed herein may be implanted between separate bones of a joint, such as between articulating bones of a mobile joint or abutting bones of an immobile joint. One or more of the interfacing bone surfaces of the joint may require resection to receive the spacer. The resection may remove the hard, outer layer of cortical bone from the interfacing surface and expose the soft, inner layer of cancellous bone beneath the interfacing surface to receive the spacer. The resection may also alter the shape of the interfacing surface to receive the spacer.

a. Ankle Joint

Referring initially to FIG. **1**, a patient's healthy ankle or tibiotalar joint **10** is shown. Ankle joint **10** includes three bones: tibia **12**, fibula **14**, and talus **16**. In use, talus **16** articulates relative to tibia **12** and fibula **14**. On medial side **18** of ankle joint **10**, tibia **12** includes an enlarged distal end known as the medial malleolus **13**. On lateral side **20** of ankle joint **10**, fibula **14** includes an enlarged distal end known as the lateral malleolus **15**. Medial malleolus **13** and lateral malleolus **15** cooperate to support and stabilize talus **16** there between.

If ankle joint **10** develops arthritis, deteriorates, suffers traumatic injury, or becomes otherwise damaged, it may be necessary to perform a joint fusion procedure to prevent further articulation of ankle joint **10**. The fused ankle joint **10** becomes rigid and immobile, like a single bone.

Traditionally, ankle joint **10** was fused by driving a plurality of screws **22** through tibia **12** and fibula **14** and into talus **16**, as shown in FIG. **2**. Screws **22** would prevent further articulation of talus **16** relative to tibia **12** and fibula **14**. To accommodate screws **22**, certain fusion procedures required resection of medial malleolus **13** and/or lateral malleolus **15**.

In FIGS. **3**A-**3**C, a first exemplary fusion spacer **100** is provided in the form of an arthrodesis spacer. As shown in FIG. **3**B, fusion spacer **100** may be constructed entirely or substantially entirely of a highly porous biomaterial **1000** in the form of a metal-coated scaffold, which is described further above.

Ankle joint **10** may be prepared to receive fusion spacer **100** by resecting tibia **12** along resected surface **24** and talus **16** along resected surface **26**. Resected surfaces **24**, **26** are illustratively planar, parallel surfaces. In an exemplary embodiment, medial malleolus **13** and/or lateral malleolus **15** may be retained to continue supporting ankle joint **10**, unlike FIG. **2**.

Fusion spacer **100** is a generally block-shaped structure having proximal surface **102** and distal surface **104**. Like resected surfaces **24**, **26** of ankle joint **10**, surfaces **102**, **104** of fusion spacer **100** are illustratively planar, parallel surfaces.

Fusion spacer **100** also includes anterior wall **106**, posterior wall **108**, medial wall **110**, and lateral wall **112** that are substantially flat and that come together at rounded or curved edges **114**. As shown in FIG. **3**C, fusion spacer **100** includes a hollow interior **116** that may be configured to receive a bone graft, an osteoconductive scaffold (e.g., CopiOs® Bone Void Filler), bone cement, or a fastener, for example.

Proximal surface **102** of fusion spacer **100** corresponds to resected surface **24** of tibia **12**, as shown in FIG. **3**B. For example, in FIG. **3**C, proximal surface **102** of fusion spacer **100** is trapezoidal in shape and narrows posteriorly (i.e., toward posterior wall **108**) to mimic the trapezoidal shape of resected surface **24** of tibia **12**. Also, in FIG. **3**C, proximal surface **102** is larger in medial-lateral width (i.e., the distance between medial wall **110** and lateral wall **112**) than in anterior-posterior depth (i.e., the distance between anterior wall **106** and posterior wall **108**). When implanted, proximal surface **102** of fusion spacer **100** may span across the soft, inner layer of cancellous bone to the hard, outer layer of cortical bone at resected surface **24** of tibia **12**.

Distal surface **104** of fusion spacer **100** corresponds to resected surface **26** of talus **16**, as shown in FIG. **3**B. For example, in FIG. **3**C, distal surface **104** (not shown) of fusion spacer **100** is rectangular in shape to mimic the rectangular shape of resected surface **26** of talus **16**. Also, in FIG. **3**C, distal surface **104** of fusion spacer **100** is larger than proximal surface **102** of fusion spacer **100**. As a result, fusion spacer **100** widens distally from proximal surface **102** to distal surface **104**, with anterior wall **106**, posterior wall **108**, medial wall **110**, and lateral wall **112** angling outward from proximal surface **102** to distal surface **104**. When implanted, distal surface **104** of fusion spacer **100** may span across the soft, inner layer of cancellous bone to the hard, outer layer of cortical bone at resected surface **26** of talus **16**.

According to an exemplary embodiment of the present disclosure, fusion spacer **100** has a highly porous construction at least along proximal surface **102** and distal surface **104**. In this manner, fusion spacer **100** may encourage bone ingrowth from tibia **12** into proximal surface **102** and from talus **16** into distal surface **104**, thereby fusing tibia **12** and talus **16** via fusion spacer **100**. According to another exemplary embodiment of the present disclosure, fusion spacer **100** is entirely porous in construction to encourage uninterrupted bone ingrowth from tibia **12** and talus **16**.

Fusion spacer **100** may be provided in various sizes to accommodate a variety of different patients. For example, a set of three fusion spacers **100** may be provided having distal surfaces **104** of various sizes (e.g., small, medium, and large). The small size distal surface **104** may have a medial-lateral width of any suitable value including any value within the range of about 25-30 mm, such as a medial-lateral with of about 28 mm. The small size distal surface **104** may have an anterior-posterior depth of any suitable value including any value within the range of about 20-25 mm, such as an anterior-posterior depth of about 22 mm. The medium size distal surface **104** may have a medial-lateral width of any suitable value including any value within the range of about 28-33 mm, such as a medial-lateral width of about 30 mm. The medium size distal surface **104** may have an anterior-posterior depth of any suitable value including any value within the range of about 20-30 mm, such as an anterior-posterior depth of about 22 mm. The large size distal surface **104** may have a medial-lateral width of any suitable value including any value within the range of about 30-37 mm, such as a medial-lateral width of about 32 mm. The large size distal surface **104** may have an anterior-posterior depth of any suitable value including any value within the range of about 20-33 mm, such as an anterior-posterior depth of about 22 mm. Each fusion spacer **100** may also be available in different proximal-distal thicknesses (i.e., the distance between proximal surface **102** and distal surface **104**), such as about 5 mm and about 10 mm. The set may include other fusion spacers **100** in addition to those described herein.

In FIG. **3**D, another fusion spacer **100'** is provided that is similar to the above-described fusion spacer **100**, with like reference numbers indicating like elements, except as described below. Fusion spacer **100'** is solid, while the above-described fusion spacer **100** is hollow. Also, fusion spacer **100'** has a relatively thin proximal-distal thickness (e.g., 5 mm), while the above-described fusion spacer **100** has a relatively thick proximal-distal thickness (e.g., 10 mm). Furthermore, distal surface **104'** of fusion spacer **100'** is trapezoidal in shape, like proximal surface **102'**, while distal surface **104** of the above-described fusion spacer **100** is rectangular in shape.

Rather than fusing the ankle joint **10**, as shown in FIG. **2**, a surgeon may choose to maintain mobility of the ankle joint **10** by performing a total ankle replacement ("TAR") procedure. As shown in FIG. **4**, TAR involves replacing the distal tibia **12** with a prosthetic tibial component **30** and the proximal talus **16** with a prosthetic talar component **32**. The prosthetic tibial component **30** rests against resected surface **34** of tibia **12**, with post **31** of the prosthetic tibial component **30** extending beyond resected surface **34** and into tibia **12**. The prosthetic talar component **32** rests against resected surface **36** of talus **16**, with post **33** extending beyond resected surface **36** and into talus **16**. Resected surfaces **34**, **36** are illustratively planar, parallel surfaces. In an exemplary embodiment, medial malleolus **13** and/or lateral malleolus **15** may be retained to supporting ankle joint **10**. Patient-specific guides and methods for preparing resected surfaces **34**, **36** of ankle joint **10** are described further in U.S. patent application Ser. No. 13/050,190 to Li, filed Mar. 17, 2011, the entire disclosure of which is expressly incorporated herein by reference.

In certain situations, the TAR procedure may fail, such as in patients suffering from infection or severe pain, for example. Therefore, it may become necessary to remove the prosthetic tibial component **30** and the prosthetic talar component **32** from the patient's ankle joint **10** and proceed with fusion of the patient's ankle joint **10**. As shown in FIG. **5**A, this removal leaves behind a large empty space between tibia **12** and talus **16** that was once occupied by the prosthetic tibial component **30** and the prosthetic talar component **32**.

In FIGS. **5**A-**5**C, a second exemplary fusion spacer **200** is provided in the form of a TAR revision implant. Fusion spacer **200** may be constructed entirely or substantially entirely of a highly porous biomaterial **1000** in the form of a metal-coated scaffold, as described further above and as shown in FIG. **3**B.

After removing the prosthetic tibial component **30** and the prosthetic talar component **32** (FIG. **4**), resected surfaces **34**, **36** of ankle joint **10** may be capable of receiving fusion spacer **200** with little or no additional bone removal. Also, medial malleolus **13** and/or lateral malleolus **15** may be retained to support ankle joint **10**. In addition to being used in TAR revision procedures, as previously described, fusion spacer **200** may also be used in primary fusion procedures involving severe bone loss.

Fusion spacer **200** is a generally block-shaped structure having proximal surface **202** and distal surface **204**. Like resected surfaces **34**, **36** of ankle joint **10**, surfaces **202**, **204** of fusion spacer **200** are illustratively planar, parallel surfaces. Fusion spacer **200** also includes anterior wall **206**, posterior wall **208**, medial wall **210**, and lateral wall **212** that are substantially flat and that come together at rounded or curved

edges **214**. As shown in FIG. **5**C, fusion spacer **200** includes a hollow interior **216** that may be configured to receive a bone graft, an osteoconductive scaffold (e.g., CopiOs® Bone Void Filler), bone cement, or a fastener, for example.

Proximal surface **202** of fusion spacer **200** corresponds to resected surface **34** of tibia **12**, as shown in FIG. **5**B. For example, in FIG. **5**C, proximal surface **202** of fusion spacer **200** is trapezoidal in shape and narrows posteriorly (i.e., toward posterior wall **208**) to mimic the trapezoidal shape of resected surface **34** of tibia **12**. Also, proximal surface **202** is illustratively larger in medial-lateral width (i.e., the distance between medial wall **210** and lateral wall **212**) than in anterior-posterior depth (i.e., the distance between anterior wall **206** and posterior wall **208**). When implanted, proximal surface **202** of fusion spacer **200** may span across the soft, inner layer of cancellous bone to the hard, outer layer of cortical bone at resected surface **34** of tibia **12**.

Distal surface **204** of fusion spacer **200** corresponds to resected surface **36** of talus **16**, as shown in FIG. **5**B. For example, in FIG. **5**C, distal surface **204** of fusion spacer **200** is trapezoidal in shape and narrows posteriorly (i.e., toward posterior wall **208**) to mimic the trapezoidal shape of resected surface **36** of talus **16**. To fill the space between tibia **12** and talus **16**, fusion spacer **200** may widen distally from proximal surface **202** toward distal surface **204**, with anterior wall **206**, posterior wall **208**, medial wall **210**, and lateral wall **212** angling outward from proximal surface **202**. However, to limit impingement near distal surface **204**, fusion spacer **200** may transition from widening distally to narrowing distally along apex **218**. When implanted, distal surface **204** of fusion spacer **200** may span across the soft, inner layer of cancellous bone to the hard, outer layer of cortical bone at resected surface **36** of talus **16**.

Distal surface **204** of fusion spacer **200** may be similar to distal surface **104** of the above-described fusion spacer **100** (FIGS. **3**A-**3**C), because both are configured to rest against the resected talus **16**. However, because fusion spacer **200** accounts for a larger amount of removed bone, fusion spacer **200** may have a larger proximal-distal thickness than the above-described fusion spacer **100**.

According to an exemplary embodiment of the present disclosure, fusion spacer **200** has a highly porous construction at least along proximal surface **202** and distal surface **204**. In this manner, fusion spacer **200** may encourage bone ingrowth from tibia **12** into proximal surface **202** and from talus **16** into distal surface **204**, thereby fusing tibia **12** and talus **16** via fusion spacer **200**. According to another exemplary embodiment of the present disclosure, fusion spacer **200** is entirely porous in construction to encourage uninterrupted bone ingrowth from tibia **12** and talus **16**.

Fusion spacer **200** may be provided in various sizes to accommodate a variety of different patients. For example, a set of three fusion spacers **200** may be provided having distal surfaces **204** of various sizes (e.g., small, medium, and large). The small size distal surface **204** may have a medial-lateral width of any suitable value including any value within the range of about 25-30 mm, such as a medial-lateral width of about 28 mm. The small size distal surface **204** may have an anterior-posterior depth of any suitable value including any value within the range of about 20-27 mm, such as an anterior posterior depth of about 25 mm. The medium size distal surface **204** may have a medial-lateral width of any suitable value including any value within the range of about 27-33 mm, such as a medial-lateral width of about 30 mm. The medium size distal surface **204** may have an anterior-posterior depth of any suitable value including any value within the range of about 25-30 mm, such as an anterior-posterior depth of about 28 mm. The large size distal surface **204** may have a medial-lateral width of any suitable value including any value within the range of about 30-37 mm, such as a medial-lateral width of about 32 mm. The large size distal surface **204** may have an anterior-posterior depth of any suitable value including any value within the range of about 27-33 mm, such as an anterior-posterior depth of about 30 mm. Each fusion spacer **200** may also be available in different proximal-distal thicknesses (i.e., the distance between proximal surface **202** and distal surface **204**), such as about 20 mm, about 25 mm, about 30 mm, about 35 mm, and about 40 mm. The set may include other fusion spacers **200** in addition to those described herein.

In FIG. **5**D, another fusion spacer **200'** is provided that is similar to the above-described fusion spacer **200**, with like reference numbers indicating like elements, except as described below. Fusion spacer **200'** is solid, while the above-described fusion spacer **200** is hollow. Also, fusion spacer **200'** has a relatively thin proximal-distal thickness (e.g., 25 mm), while the above-described fusion spacer **200** has a relatively thick proximal-distal thickness (e.g., 35 mm).

In FIG. **5**E, another fusion spacer **200"** is provided that is similar to the above-described fusion spacer **200**, with like reference numbers indicating like elements, except as described below. Fusion spacer **200"** includes stem **220"** that extends proximally from proximal surface **202"**. When implanted with proximal surface **202"** of fusion spacer **200"** positioned against resected surface **34** of tibia **12** (FIG. **5**B), stem **220"** may extend beyond resected surface **34** and into the space once occupied by post **31** of the prosthetic tibial component **30** (FIG. **4**).

In FIGS. **5**F and **5**G, other fusion spacers **200'''**, **200''''** are provided that are similar to the above-described fusion spacer **200**, with like reference numbers indicating like elements, except as described below. Fusion spacers **200'''**, **200''''** are generally conical-shaped structures, while the above-described fusion spacer **200** is a generally block-shaped structure. With respect to fusion spacer **200'**, for example, anterior wall **206'''**, posterior wall **208'''**, medial wall **210'''**, and lateral wall **212'''** cooperate to define the generally conical-shaped structure. Additionally, fusion spacer **200''''** of FIG. **5**G includes stem **220''''** that extends proximally from proximal surface **202''''**. When implanted with proximal surface **202''''** of fusion spacer **200''''** positioned against resected surface **34** of tibia **12** (FIG. **5**B), stem **220''''** may extend beyond resected surface **34** and into the space once occupied by post **31** of the prosthetic tibial component **30** (FIG. **4**).

b. Subtalar Joint

Referring next to FIG. **6**, a patient's subtalar or talocalcaneal joint **40** is shown. Subtalar joint **40** includes talus **16** and calcaneus **42**. Articulation between talus **16** and calcaneus **42** occurs in three areas: the posterior articular facet **44**, the middle articular facet **45**, and the anterior articular facet **46**. In the posterior articular facet **44**, a generally concave talus **16** articulates with a generally convex calcaneus **42**. In the anterior articular facet **46**, a generally convex talus **16** articulates with a generally concave calcaneus **42**.

If subtalar joint **40** develops arthritis, deteriorates, suffers traumatic injury, or becomes otherwise damaged, it may be necessary to perform a joint fusion procedure to prevent further articulation of subtalar joint **40**. The fused subtalar joint **40** becomes rigid and immobile, like a single bone. Traditionally, subtalar joint **40** was fused by driving one or more screws **22** through talus **16** and into calcaneus **42**, as shown in FIG. **6**. Screws **22** would prevent further articulation of talus **16** relative to calcaneus **42**.

In FIGS. **7**A-**7**D, a third exemplary fusion spacer **300** is provided in the form of a subtalar posterior facet spacer.

Fusion spacer **300** may be constructed entirely or substantially entirely of a highly porous biomaterial **1000** in the form of a metal-coated scaffold, as described further above and as shown in FIG. **3**B.

The posterior articular facet **44** of subtalar joint **40** may be prepared to receive fusion spacer **300** by resecting talus **16** along resected surface **48**, which is illustratively concave, and by resecting calcaneus **42** along resected surface **49**, which is illustratively convex.

As shown in FIGS. **7**C and **7**D, fusion spacer **300** is a generally block-shaped structure having proximal surface **302** and distal surface **304**. Proximal surface **302** of fusion spacer **300** is convex in shape to interact with the concave resected surface **48** of talus **16**, as shown in FIG. **7**B. Distal surface **304** of fusion spacer **300** is concave in shape to interact with the convex resected surface **49** of calcaneus **42**, as shown in FIG. **7**B. The convex proximal surface **302** may mimic the concave distal surface **304** such that fusion spacer **300** maintains a substantially constant proximal-distal thickness (i.e., the distance between proximal surface **302** and distal surface **304**). Proximal surface **302** and distal surface **304** of fusion spacer **300** are illustratively square-shaped or rectangular-shaped when viewed in plan.

According to an exemplary embodiment of the present disclosure, fusion spacer **300** has a highly porous construction at least along proximal surface **302** and distal surface **304**. In this manner, fusion spacer **300** may encourage bone ingrowth from talus **16** into proximal surface **302** and from calcaneus **42** into distal surface **304**, thereby fusing talus **16** and calcaneus **42** via fusion spacer **300**. According to another exemplary embodiment of the present disclosure, fusion spacer **300** is entirely porous in construction to encourage uninterrupted bone ingrowth from talus **16** and calcaneus **42**.

Fusion spacer **300** also includes anterior wall **306**, posterior wall **308**, medial wall **310**, and lateral wall **312** that are substantially flat and that come together at rounded or curved edges **314**. As shown in FIGS. **7**C and **7**D, fusion spacer **300** includes a hollow interior **316** that may be configured to receive a bone graft, an osteoconductive scaffold (e.g., CopiOs® Bone Void Filler), bone cement, or a fastener, for example.

Fusion spacer **300** may be provided in various sizes to accommodate a variety of different patients. For example, fusion spacer **300** may be available in anterior-posterior depths (i.e., the distance between anterior wall **306** and posterior wall **308**) of about 16 mm, about 18 mm, and about 20 mm, and medial-lateral widths (i.e., the distance between medial wall **310** and lateral wall **312**) of about 16 mm, about 18 mm, and about 20 mm. Also, each fusion spacer **300** may be available in different proximal-distal thicknesses (i.e., the distance between proximal surface **302** and distal surface **304**), such as about 4 mm, about 7 mm, and about 10 mm. The set may include other fusion spacers **300** in addition to those described herein.

In FIG. **7**E, a fourth exemplary fusion spacer **400** is provided in the form of a subtalar middle facet spacer. Fusion spacer **400** may be constructed entirely or substantially entirely of a highly porous biomaterial **1000** in the form of a metal-coated scaffold, as described further above and as shown in FIG. **3**B.

In an exemplary embodiment, with the above-described fusion spacer **300** implanted into the posterior articular facet **44** of subtalar joint **40**, fusion spacer **400** is implanted in combination therewith in the middle articular facet **45** of subtalar joint **40**. It is also within the scope of the present disclosure to provide a suitably shaped fusion spacer for anterior articular facet **46** of subtalar joint **40**.

Fusion spacer **400** is a generally block-shaped structure having proximal surface **402** and distal surface **404**. Proximal surface **402** and distal surface **404** of fusion spacer **400** are illustratively planar, parallel surfaces and are square-shaped or rectangular-shaped when viewed in plan. Fusion spacer **400** also includes anterior wall **406**, posterior wall **408**, medial wall **410**, and lateral wall **412** that are substantially flat and that come together at rounded or curved edges **414**.

According to an exemplary embodiment of the present disclosure, fusion spacer **400** has a highly porous construction at least along proximal surface **402** and distal surface **404**. In this manner, fusion spacer **400** may encourage bone ingrowth from talus **16** into proximal surface **402** and from calcaneus **42** into distal surface **404**, thereby fusing talus **16** and calcaneus **42** via fusion spacer **400**. According to another exemplary embodiment of the present disclosure, fusion spacer **400** is entirely porous in construction to encourage uninterrupted bone ingrowth from talus **16** and calcaneus **42**.

Fusion spacer **400** may be provided in various sizes to accommodate a variety of different patients. For example, fusion spacer **400** may be available in anterior-posterior depths (i.e., the distance between anterior wall **406** and posterior wall **408**) of about 8 mm, about 10 mm, and about 12 mm, and medial-lateral widths (i.e., the distance between medial wall **410** and lateral wall **412**) of about 8 mm, about 10 mm, and about 12 mm. Also, each fusion spacer **400** may be available in different proximal-distal thicknesses (i.e., the distance between proximal surface **402** and distal surface **404**), such as about 4 mm and about 6 mm. The set may include other fusion spacers **400** in addition to those described herein.

In FIGS. **8**A-**8**B, a fifth exemplary fusion spacer **500** is provided in the form of a subtalar posterior facet spacer. Fusion spacer **500** may be constructed entirely or substantially entirely of a highly porous biomaterial **1000** in the form of a metal-coated scaffold, as described further above and as shown in FIG. **3**B.

Unlike the above-described fusion spacer **300**, which has arcuate proximal and distal surfaces **302**, **304**, fusion spacer **500** has generally planar proximal and distal surfaces **502**, **504**. Proximal and distal surfaces **502**, **504** of fusion spacer **500** are illustratively trapezoidal-shaped when viewed in plan. The posterior articular facet **44** of subtalar joint **40** may be prepared to receive fusion spacer **500** by resecting talus **16** and calcaneus **42** generally planar resected surfaces **50**, **52**, respectively.

According to an exemplary embodiment of the present disclosure, fusion spacer **500** has a highly porous construction at least along proximal surface **502** and distal surface **504**. In this manner, fusion spacer **500** may encourage bone ingrowth from talus **16** into proximal surface **502** and from calcaneus **42** into distal surface **504**, thereby fusing talus **16** and calcaneus **42** via fusion spacer **500**. According to another exemplary embodiment of the present disclosure, fusion spacer **500** is entirely porous in construction to encourage uninterrupted bone ingrowth from talus **16** and calcaneus **42**.

Fusion spacer **500** is a generally wedge-shaped structure having anterior wall **506**, posterior wall **508**, medial wall **510**, and lateral wall **512** that are substantially flat and that come together at rounded or curved edges **514**. As shown in FIG. **8**A, medial wall **510** is taller than lateral wall **512** to restore the arch and the angle of the foot. As shown in FIG. **8**B, fusion spacer **500** includes a hollow interior **516** that may be configured to receive a bone graft, an osteoconductive scaffold (e.g., CopiOs® Bone Void Filler), bone cement, or a fastener, for example.

Fusion spacer **500** may be provided in various sizes to accommodate a variety of different patients. For example, fusion spacer **500** may be available in anterior-posterior depths (i.e., the distance between anterior wall **506** and posterior wall **508**) of about 23 mm, about 25 mm, and about 27 mm, and medial-lateral widths (i.e., the distance between medial wall **510** and lateral wall **512**) that vary from about 12 mm, about 14 mm, or about 16 mm to about 21 mm, about 23 mm, or about 25 mm. Also, each fusion spacer **400** may be available in different proximal-distal thicknesses (i.e., the distance between proximal surface **502** and distal surface **504**), such as about 6 mm, about 9 mm, and about 12 mm. The set may include other fusion spacers **500** in addition to those described herein.

c. Talonavicular Joint

Referring next to FIG. **9**A, a patient's talonavicular joint **60** is shown. Talonavicular joint **60** includes a generally convex talus **16** and a generally concave navicular **61**. Like the above-described ankle joint **10** and the above-described subtalar joint **40**, talonavicular joint **60** may require fusion.

In FIGS. **9**A-**9**B, a sixth exemplary fusion spacer **600** is provided to fuse talonavicular joint **60**. Fusion spacer **600** may be constructed entirely or substantially entirely of a highly porous biomaterial **1000** in the form of a metal-coated scaffold, as described further above and as shown in FIG. **3**B.

Fusion spacer **600** is a generally chip-shaped structure having posterior surface **602** and anterior surface **604**. Posterior surface **602** of fusion spacer **600** is concave in shape to interact with the generally convex resected surface **62** of talus **16**, and anterior surface **604** of fusion spacer **600** is convex in shape to interact with the generally concave resected surface **64** of navicular **61**, as shown in FIG. **9**A. The concave posterior surface **602** may mimic the convex anterior surface **604** such that fusion spacer **600** maintains a substantially constant anterior-posterior thickness (i.e., the distance between posterior surface **602** and anterior surface **604**). Posterior surface **602** and anterior surface **604** of fusion spacer **600** are illustratively oval-shaped when viewed in plan. Fusion spacer **600** also includes proximal wall **606**, distal wall **608**, medial wall **610**, and lateral wall **612** that come together at rounded or curved edges **614**. The anatomical identification of each wall **606**, **608**, **610**, **612** may vary depending on how fusion spacer **600** is oriented when implanted.

According to an exemplary embodiment of the present disclosure, fusion spacer **600** has a highly porous construction at least along posterior surface **602** and anterior surface **604**. In this manner, fusion spacer **600** may encourage bone ingrowth from talus **16** into posterior surface **602** and from navicular **61** into anterior surface **604**, thereby fusing talus **16** and navicular **61** via fusion spacer **600**. According to another exemplary embodiment of the present disclosure, fusion spacer **600** is entirely porous in construction to encourage uninterrupted bone ingrowth from talus **16** and navicular **61**.

Fusion spacer **600** may be provided in various sizes to accommodate a variety of different patients. For example, fusion spacer **600** may be available in proximal-distal heights (i.e., the distance between proximal wall **606** and distal wall **608**) of about 14 mm, about 18 mm, and about 22 mm, and medial-lateral widths (i.e., the distance between medial wall **610** and lateral wall **612**) of about 26 mm, about 30 mm, and about 34 mm. Also, each fusion spacer **600** may be available in different anterior-posterior thicknesses (i.e., the distance between posterior surface **602** and anterior surface **604**), such as about 6 mm, about 9 mm, and about 12 mm. The set may include other fusion spacers **600** in addition to those described herein.

The same or a similar fusion spacer **600** may also be configured for implantation between the patient's navicular **61** and multiple cuneiforms **66** (FIG. **9**A). In this embodiment, fusion spacer **600** may encourage bone ingrowth from navicular **61** into posterior surface **602** and from cuneiforms **66** into anterior surface **604**, thereby fusing navicular **61** and cuneiforms **66** via fusion spacer **600**.

d. Other Foot Joints and Fusion Spacers

A seventh exemplary fusion spacer **700** is provided in FIG. **10**C. Fusion spacer **700** may be constructed entirely or substantially entirely of a highly porous biomaterial **1000** in the form of a metal-coated scaffold, as described further above and as shown in FIG. **3**B.

Fusion spacer **700** is a generally kidney-shaped structure having posterior surface **702** and anterior surface **704**. Posterior surface **702** and anterior surface **704** of fusion spacer **700** are illustratively planar, parallel surfaces and are kidney-shaped when viewed in plan. Fusion spacer **700** also includes proximal wall **706**, distal wall **708**, medial wall **710**, and lateral wall **712** that come together at rounded or curved edges **714**. The anatomical identification of each wall **706**, **708**, **710**, **712** may vary depending on how fusion spacer **700** is oriented when implanted. As shown in FIG. **10**C, fusion spacer **700** further includes a hollow interior **716** that may be configured to receive a bone graft, an osteoconductive scaffold (e.g., CopiOs® Bone Void Filler), bone cement, or a fastener, for example.

According to an exemplary embodiment of the present disclosure, fusion spacer **700** has a highly porous construction at least along posterior surface **702** and anterior surface **704** to encourage bone ingrowth into posterior surface **702** and anterior surface **704**. According to another exemplary embodiment of the present disclosure, fusion spacer **700** is entirely porous in construction to encourage uninterrupted bone ingrowth through fusion spacer **700**.

Fusion spacer **700** may be provided in various sizes to accommodate a variety of different patients. Fusion spacer **100** may also be configured for implantation in a variety of different joints. In FIG. **10**A, for example, fusion spacer **700** is shown implanted on lateral side **20** of the patient's foot between calcaneus **42** and cuboid **70**. In FIG. **10**B, fusion spacer **700** is shown implanted on medial side **18** of the patient's foot between navicular **61** and a single cuneiform **66**. As an aside, the above-described fusion spacer **600** may be longer than the present fusion spacer **700** to span across multiple cuneiforms **66** (FIG. **9**A).

An eighth exemplary fusion spacer **800** is provided in FIG. **11**C. Fusion spacer **800** may be constructed entirely or substantially entirely of a highly porous biomaterial **1000** in the form of a metal-coated scaffold, as described further above and as shown in FIG. **3**B.

Fusion spacer **800** is a generally teardrop-shaped structure having posterior surface **802** and anterior surface **804**. Posterior surface **802** and anterior surface **804** of fusion spacer **800** are illustratively planar, parallel surfaces and are teardrop-shaped when viewed in plan. Fusion spacer **800** also includes proximal wall **806**, distal wall **808**, medial wall **810**, and lateral wall **812** that come together at rounded or curved edges **814**. The anatomical identification of each wall **806**, **808**, **810**, **812** may vary depending on how fusion spacer **800** is oriented when implanted.

According to an exemplary embodiment of the present disclosure, fusion spacer **800** has a highly porous construction at least along posterior surface **802** and anterior surface **804** to encourage bone ingrowth into posterior surface **802** and anterior surface **804**. According to another exemplary embodiment of the present disclosure, fusion spacer **800** is

entirely porous in construction to encourage uninterrupted bone ingrowth through fusion spacer **800**.

Fusion spacer **800** may be provided in various sizes to accommodate a variety of different patients. Fusion spacer **800** may also be configured for implantation in a variety of different joints. In FIG. **11**A, for example, fusion spacer **800** is shown implanted in talonavicular joint **60** on medial side **18** of the patient's foot between talus **16** and navicular **61**. In FIG. **11**B, fusion spacer **800** is shown implanted on medial side **18** of the patient's foot between metatarsal **72** and its corresponding phalange **74**.

3. Osteotomy Spacers

In another embodiment, the fusion spacers disclosed herein may be implanted between two segments of a single bone following an osteotomy procedure, during which the bone may be cut or otherwise divided. The resection may expose the soft, inner layer of cancellous bone in each segment to receive the spacer.

A ninth exemplary fusion spacer **900** is provided in FIG. **12**D. Fusion spacer **900** may be constructed entirely or substantially entirely of a highly porous biomaterial **1000** in the form of a metal-coated scaffold, as described further above and as shown in FIG. **3**B.

Fusion spacer **900** is a generally cylindrically-shaped or disc-shaped structure having posterior surface **902** and anterior surface **904**. Posterior surface **902** and anterior surface **904** of fusion spacer **900** are illustratively planar, parallel surfaces and are circular-shaped when viewed in plan. Fusion spacer **900** also includes proximal wall **906**, distal wall **908**, medial wall **910**, and lateral wall **912** that are curved in shape and that come together at rounded or curved edges **914**. The anatomical identification of each wall **906**, **908**, **910**, **912** may vary depending on how fusion spacer **900** is oriented when implanted.

According to an exemplary embodiment of the present disclosure, fusion spacer **900** has a highly porous construction at least along posterior surface **902** and anterior surface **904** to encourage bone ingrowth into posterior surface **902** and anterior surface **904**. According to another exemplary embodiment of the present disclosure, fusion spacer **900** is entirely porous in construction to encourage uninterrupted bone ingrowth through fusion spacer **900**.

Fusion spacer **900** may be provided in various sizes to accommodate a variety of different patients. For example, fusion spacer **900** may be available in proximal-distal heights (i.e., the distance between proximal wall **906** and distal wall **908**) of about 12 mm, about 14 mm, about 16 mm, about 18 mm, and about 20 mm, and medial-lateral widths (i.e., the distance between medial wall **910** and lateral wall **912**) of about 12 mm, about 14 mm, about 16 mm, about 18 mm, and about 20 mm. Also, each fusion spacer **900** may be available in different anterior-posterior thicknesses (i.e., the distance between posterior surface **902** and anterior surface **904**), such as about 5 mm and about 10 mm. The set may include other fusion spacers **900** in addition to those described herein.

In FIG. **12**F, another fusion spacer **900'** is provided that is similar to the above-described fusion spacer **900**, with like reference numbers indicating like elements, except as described below. Fusion spacer **900'** is an angled or wedged-shaped component, with posterior surface **902'** of fusion spacer **900'** being angled relative to anterior surface **904'** of fusion spacer **900'**. For example, posterior surface **902'** may be angled relative to anterior surface **904'** by about 5 degrees, about 10 degrees, about 15 degrees, or about 20 degrees. In this embodiment, the anterior-posterior thicknesses of fusion spacer **900'** varies, such as from about 3 mm, about 4 mm, or about 5 mm to about 6 mm, about 7 mm, or about 9 mm, for example.

In FIG. **12**E, another fusion spacer **900"** is provided that is similar to the above-described fusion spacers **900**, **900'**, with like reference numbers indicating like elements, except as described below. Like fusion spacer **900'** of FIG. **12**F, fusion spacer **900"** is also an angled or wedged-shaped component, with posterior surface **902"** of fusion spacer **900"** being angled relative to anterior surface **904"** of fusion spacer **900"**. Rather than being generally cylindrical in shape, like fusion spacers **900**, **900'**, fusion spacer **900"** is more rectangular-shaped or block-shaped and includes substantially flat walls **906"**, **908"**, **910"**, **912"** that come together at rounded or curved edges **914"**.

Fusion spacers **900**, **900'**, **900"**, may be configured for implantation in a variety of different osteotomized bones. A desired fusion spacer **900**, **900'**, **900"**, may be selected to restore the osteotomized bone to its natural, healthy shape. As shown in FIG. **12**A, for example, a suitable fusion spacer **900**, **900'**, **900"**, may be implanted on medial side **18** of the patient's foot between osteotomized cuneiform segments **66***a*, **66***b* (i.e. a Cotton osteotomy). As shown in FIG. **12**B, a suitable fusion spacer **900**, **900'**, **900"**, may be implanted on lateral side **20** of the patient's foot between osteotomized calcaneus segments **42***a*, **42***b* (i.e. an Evans osteotomy). As shown in FIG. **12**C, a suitable fusion spacer **900**, **900'**, **900"**, may be implanted on medial side **18** of the patient's foot between osteotomized metatarsal segments **72***a*, **72***b*.

4. Ancillary Fixation

Ancillary fixation mechanisms may be used to support and stabilize the above-described fusion spacers. In one embodiment, an ancillary bone plate (e.g., a periarticular bone plate) may be implanted across the bones being fused. In the case of the fused ankle joint **10** of FIG. **3**B, for example, an ancillary bone plate may be implanted across tibia **12** and talus **16** to support and stabilize fusion spacer **100** there between. In another embodiment, one or more ancillary screws may be implanted across the bones being fused. In the case of the fused ankle joint **10** of FIG. **3**B, for example, an ancillary screw may be implanted from tibia **12** (e.g., medial malleolus **13** of tibia **12**) into talus **16** to support and stabilize fusion spacer **100** there between. Another ancillary screw may be implanted from fibula **14** (e.g., lateral malleolus **15** of fibula **14**) into tibia **12** to further support fusion spacer **100**.

5. Methods and Instruments

In operation, a surgeon prepares the bone or bones that will receive the fusion spacer. A suitable cutting tool **2000** is shown in FIG. **14**. The surgeon may resect the bone(s) using tool **2000**, while running a saw blade through an appropriate resection guide **2002**. The surgeon may then distract the adjacent bones or bone segments to expose the area there between that will receive the fusion spacer.

After preparing the bone or bones, the surgeon may insert the fusion spacer there between. A suitable insertion tool **2010** is shown in FIG. **13** with fusion spacer **900**, for example. Tool **2010** includes side jaws **2012** that may be manipulated to grip the fusion spacer **900**, illustratively along opposing side walls **906**, **908** of fusion spacer **900**. Tool **2010** also includes a central shaft **2014** that mates with or abuts the fusion spacer **900**, illustratively along side wall **910** of fusion spacer **900**, to apply an impaction force. Shaft **2014** may also facilitate extraction of fusion spacer **900**, if necessary.

Although the following description and figures of this disclosure are directed towards an ankle fusion procedure, the present disclosure is not limited to use in the ankle. The devices and methods outlined in this disclosure can be applied

to any suitable joint or bone in need of resection or fusing or other modifications. The methods and devices disclosed herein for resecting bone and creating a space in a joint or in a single bone can be used in conjunction with a variety of space-filling implants and devices including fusion spacers, bone implants, artificial joint implants or other devices for repairing or altering bones.

An ankle resection system **250** (see FIG. **21**) can include an anchor assembly **120** as illustrated in FIG. **15**. Although this device will be described in relation to an ankle joint surgery, the terms "proximal", "distal", "anterior", "posterior" etc. are used for explanatory purposes only and should not be construed as limiting. At the anchor proximal end **118**, the anchor assembly **120** can include an anchor main block **121** which can be block shaped, cylindrically shaped, oval shaped or otherwise and can house several apertures, openings and/or adjustment features and can include a tibia pin aperture **134** suited for pinning the anchor main block **121** to a tibia **12** (see FIG. **22**). The anchor main block **121** can include a mechanism for securing the anchor main block **121** to a pin passing through the tibia pin aperture **134**, such as a threaded bolt **124** tightened or loosened by a knob **138** on an anchor adjustment member **126**. The threaded bolt **124** can pass through a threaded opening **139** and engage a surface of the pin passing through the tibia pin aperture **134**. The tibia pin can be secured to the main block **121** in any suitable manner including using any type of holding, clamping or reversible locking mechanism. At a main block distal end **86**, the anchor main block **121** can include a shaft head mating recess **128**, configured to receive a shaft head **125**. The shaft head **125** can be positioned on a shaft proximal end **87** of an anchor shaft member **130**, which extends to a distal end **119** of the anchor assembly **120**. The shaft head **125** can be configured to be adjustable in two dimensions such as an angular adjustment **88** and a medial lateral adjustment **89**. The shaft head **125** can have a cylindrical shape which can allow it to be rotated within the shaft head mating recess **128** and providing the angular adjustment **88**. The cylindrical shape of the shaft head **125** can also allow a medial/lateral movement within the shaft head mating recess **128** and thereby allowing both an angular adjustment **88** and a medial lateral adjustment **89** to the anchor shaft **130** which extends distally from the shaft head **125**. The mating features of the shaft head **125** and the shaft head recess **128** can be reversed such that the anchor main block **121** can include a positive cylindrical member and the shaft head can include a recess to receive the positive cylindrical member.

The shaft head **125** can be locked into a position by a shaft head adjustment member **123** which can include a threaded bolt **124** attached to a knob **138**. The threaded bolt **124** can pass through a threaded opening **139** and engage a surface of the shaft head **125**. The anchor block **121** can include a retaining pin **129** configured to limit the medial/lateral movement of the shaft head **125** and keep the shaft head **125** from falling out of the anchor block **121** while the shaft head **125** is not locked in a position. The anchor shaft **130** can include a lumen **127** configured to receive an extension rod **140** (see FIG. **16**) and allow longitudinal movement of the extension rod **140** within the length of the anchor shaft **130**. The anchor shaft **130** can include sight slots **141** or openings to view a position of a rod proximal end **144** or any portion of the extension rod **140** (see FIGS. **16** and **21**). The distal end **119** of the anchor assembly **120** can include a distal end attachment member **132**. The distal end attachment member **132** can include a length adjustment member **131** configured to tighten or loosen a knob **138** attached to a threaded bolt **124** which can pass through a threaded opening **139**, engage the extension rod **140** and lock or unlock its position. The distal end attachment member **132** can include a distal end flat **135** which can ensure that the extension rod **140** cannot rotate within the lumen **127** and can be assembled facing one direction. The distal end attachment member **132** can include an anchor frame post aperture **133** which can be configured substantially transverse to the direction of the lumen **127**. In an alternative embodiment, the anchor frame post aperture **133** can be configured to engage a frame post **160** (see FIG. **21**) and bypass any need for the extension rod **140** (see FIG. **16**).

FIG. **16** illustrates the extension rod **140** which can include a longitudinal member **149** extending from the rod proximal end **144** to a rod distal end **145**. The extension rod **140** can be shaped in cross section as round, square, oval or otherwise and can include at least one flat **143** (see FIG. **21**) along at least a portion of its length, configured to mate with a distal end flat **135** of the anchor shaft **130** (see FIG. **15**) and which can ensure that the extension rod **140** can be positioned in the lumen **127** of the anchor assembly **120** in only one orientation. The rod distal end **145** can include a frame post aperture **147** configured to receive a frame post **160** (see FIG. **21**). The frame post aperture **147** can include a geometry such as a frame post aperture flat **148** configured to mate with a frame post flat **161** and limit the orientation of the connection between the extension rod **140** and the frame **150**. The geometry of the mating features of the extension rod **140**, such as flat **143** and distal end member **132**, such as distal end flat **135**, can include any type of polygon, key/keyway, star shape, positive/negative feature which can limit orientation to one direction (see FIGS. **15**, and **21**). Similar geometries can be applied to the mating features of the anchor frame post aperture **133** or the frame post aperture **147** (see FIGS. **15**, **16**, and **17**). A proximity adjustment member **146** can provide adjustment of the position of the rod distal end **145** relative to the frame post **160** (see FIG. **22**) and can include a threaded bolt **124** and a knob **138**. The threaded bolt **124** can pass through a threaded opening **139**, engage a surface of the frame post **160** and lock movement of the frame post **160** relative to the proximity adjustment member **146**.

FIG. **17** illustrates a resection frame **150** which can include a longitudinal body member **77** extending from a proximal end **78** to a distal end **79**. The resection frame **150** can include a frame post **160** extending in a substantially transverse direction from the longitudinal body member **77**. The longitudinal body member **77** can include a proximal body portion **220**. The proximal body portion **220** can be a central area from which extend a medial leg **153** and a lateral leg **157**. The longitudinal body member **77** can include an opening **155** bordered on each side by the lateral leg **157** and the medial leg **156**. The opening can be configured to receive a portion of a resection guide **170** (see FIG. **21**). The longitudinal body member can include an anterior face **164** opposite a posterior face **81** (not pictured). The posterior face **81** can be configured to rest against a bone or joint such as an ankle joint **10** during a resectioning procedure (see FIG. **22**). The longitudinal body member **77** can include one or more apertures near the proximal end **78** such as a proximal tibial aperture **151** and a distal tibial aperture **152**. These tibial apertures **151**, **152** can allow pins to pass through the apertures and into a bone such as the tibia **12** (see FIG. **22**) at angles configured to provide security as well as limiting any conflict with resectioning cuts. The longitudinal body member **77** can include one or more apertures near the distal end **79** such as a medial talar aperture **153** and a lateral talar aperture **154**. These talar apertures **153** and **154** can allow pins to pass through the apertures and into a bone such as a talus **16** (see FIG. **22**) at angles configured to

provide security as well as limiting any conflict with resectioning cuts. The apertures **151**, **152**, **153**, and **154** can include support members such as a lateral pin support **165** and a medial pin support **166** that can be configured to provide additional support to the resection frame **150** as the apertures receive pins which can be connected to bones. The medial leg **156** and the lateral leg **157** can include an attaching member **163** configured to provide attachment for the resection guide **170** (see FIG. **21**). The attachment member **163** can include a threaded hole, a threaded stud, or a clamping mechanism. The distal end **79** can include a posterior recess **158** configured to allow clearance for a bone formation and can be a cut out shape oriented towards the posterior face **81**.

A resection frame such as resection frame **150** can be shaped and configured in a variety of manners to suit a particular anatomy and to work in conjunction with a cutting guide such as guide **170**, and in this regard, it will be understood that the various pieces or sections of a frame (e.g., arms, legs, etc.), whether the frame is modular or monolithic, can be provided in a variety of shapes and sizes and can be arranged in any suitable fashion so as to provide a primary opening in the frame such as opening **155** through which a bone cutting element can pass. In one example, the resection frame **150** can be configured for an ankle joint resection. In an example, a resection frame can be configured for a resection of a first metatarsophalangeal joint or an osteotomy of bones in the hand.

FIG. **18** illustrates a top view of the resection frame **150** which can include window recesses **162**. The window recesses **162** can be oriented towards the opening **155** and can provide clearance for a bone formation and allow the resection frame **150** to be positioned in a more distal direction. A scribe line **159** can be engraved or marked across a medial leg **156** and a lateral leg **157** and can be configured to aid the surgeon in placement of the resection frame **150** by orienting the scribe line **159** with a possible resection cut.

FIG. **19** illustrates a resection guide **170**. The resection guide **170** can provide slots, openings or other interior or exterior surfaces which act as directional guides and supports for a bone cutting element **190** (see FIG. **22**). A resection guide such as resection guide **170** and any associated bone cutting element-guiding surfaces can be shaped and configured in any suitable manner to fit a particular anatomy and to work in conjunction with a resection frame such as resection frame **150**. The resection guide **170** can have its associated slots or openings shaped to provide cuts for any form or location of resection. In one example, the resection guide **170** can be configured for an ankle joint resection. In another example, the resection guide **170** can be configured for a resection of a first metatarsophalangeal joint or an osteotomy of bones in the hand. In an example the resection guide **170** could provide slots shaped to receive a bone saw or bone knife. In another example the resection guide **170** could have drill guides or a combination of saw guides and drill guides. The resection guide **170** can be rectangular, round, oval, or oblong and can have a guide proximal end **82** and a guide distal end **83**. The guide body **84** can be divided into an anterior body **177** and a posterior body **178**. The posterior body **178** can be shaped with a width **176** small enough to be received in the opening **155** of the resection frame **150** (see FIGS. **18** and **21**). The anterior body **177** can be configured to be wide enough to engage the anterior face **164** of the resection frame **150**, such that the frame can provide support for the resection guide **170**. The resection guide **150** can be configured without an anterior body portion **178** and have the guide body **84** anterior to the anterior face **164** of the resection frame **150** (see FIGS. **18** and **21**).

The guide distal end **83** can have a surface such as a distal aspect **179** that can be shaped to act as a guide for a bone cutting element **190** (see FIG. **22**). The distal aspect can be planar to allow a bone cutting element **190** such as a saw blade or a knife blade to engage and be guided by the distal aspect **179** during a bone cutting procedure. The guide body **84** can include a series of transverse cutting slots **172** which can allow the surgeon to select a size of a resected bone void **182** (see FIG. **27**) bordered on a distal end by the cut aided by the distal aspect **179** and bordered on a proximal end by a cut aided by the selected transverse cutting slot **172**. The resection guide **170** can include a lateral cutting slot **169** and a medial cutting slot **171**. The lateral cutting slot **169** and the medial cutting slot **171** can connect cuts made using the distal aspect **179** and the transverse cutting slot **172**. In an example, the cutting slots **169** and **171** and a transverse cutting slot **172** can be connected and need not be straight as shown. The resection guide **170** can include a cut out **173** which can aid the surgeon in viewing anatomical features the resection guide **170** is positioned over. The anterior body **177** can include proximal/distal adjustment slots **174** which can allow the resection guide **170** to be moved relative to the resection frame **150** (see FIG. **22**). Bolts **175** can be used to lock any movement between the resection guide **170** and the resection frame **150**. FIG. **20** illustrates a top view of the resection guide **170**. The lateral cutting slot **169** and the medial cutting slot **171** can be angled inwardly towards the proximal end **82** to provide resection cuts for an ankle resection system **250** (see FIG. **21**). The resection guide can include slot markings **85** which can correlate to a selected fusion spacer or bone implant size. The resection guide **150** can be configured in series of sizes such as small, medium and large; to correlate to anatomical variations in body sizes.

FIG. **21** illustrates an assembled ankle resection system **250**. Depending on the size of a patient, either a longer or shorter extension rod **140** can be selected. In some embodiments, no extension rod **140** is used. For example, the proximal tibial anchor **120** can couple directly to the resection frame **150**. The rod proximal end **144** can be positioned in the lumen **127** of the anchor shaft **130** of the anchor assembly **120**. The extension rod flat **143** and the distal end flat **135** can ensure that the extension rod **140** is oriented correctly. The frame post aperture **147** located at the rod distal end **145** of the extension rod **140** is slid over the frame post **160** of the resection frame **150**. The mating of the frame post aperture flat **148** (see FIG. **16**) and the frame post flat **161** (see FIG. **17**) can ensure correct orientation of the resection frame **150**. The resection guide **170** can be supplied in a wide variety of sizes and cutting slot configurations. A surgeon can select a resection guide **170** and install it on the resection frame **150**. The resection guide **170** can be located on the anterior face **164** of the resection frame **150** and can be attached or coupled on each side by bolts **175**. The attachment or coupling of the resection guide **170** to the resection frame **150** can be accomplished in any manner known to those skilled in the art to allow the resection guide **170** to be repositioned such that it does not block the opening **155**. In an example, the attachment or coupling can be in the form of a hinge. In an example, the resection guide **170** can be pinned on one side of the resection frame **150** and bolted on the other side. The width **176** of the posterior body **178** (see FIG. **19**) of the resection guide **170** can be configured to fit in between the medial leg **156** and the lateral leg **157** of the resection frame **150**. The anterior body **177** of the resection guide **170** can be configured to be wider than the opening **155** of the resection frame **150** and the lower surface (not pictured) of the anterior body **177** can rest against the anterior face **164** of the resection

frame **150**. The posterior body **178** (see FIG. **19**) can be very close to bones such as the talus **16** and give support to cutting elements such as a saw blade **187** (see FIG. **22**).

In FIG. **21**, the ankle resection system **250** can be positioned over the tibia **12** and pinned to the tibia **12**. Specifically, the main block **121** of the anchor assembly **120** can be positioned over the tubercle (not pictured) of the tibia **12**. Using the tibia pin aperture **134**, a surgeon can pin the anchor assembly **120** to a proximal end (not pictured) of the tibia **12**. When a desired axis position on the tubercle has been located, a fastener, such as a 125 mm threaded fixation pin can be inserted through the tibia pin aperture **134** into the tibial tubercle. From this position, the ankle resection system **250** can be adjusted in several ways to locate the resection guide **170** at a correct position for resectioning. In some examples a fusion spacer **100** is used with an intramedullary nail **194** and the hollow interior **116** of the fusion spacer **100** can be aligned with the intramedullary canal **195** (see FIGS. **3**C and **28**) of a bone. In an example of an ankle resectioning, an axial angle of the ankle resection system **250** can be changed by rotating the system **1** about the pin (not pictured) installed in the tibia pin aperture **134**. Once an axis (not pictured) has been aligned with the tibia **12** (see FIG. **22**), the axis adjustment member **126** can be tightened so that the anchor assembly **120** is immovable relative to a pin (not pictured) through the tibia pin aperture **134**. The extension rod **140** can be slidable within the lumen **127** of the anchor shaft **124** and the position of the rod distal end **145** can be adjusted in the longitudinal direction. A slope of the ankle resection system **250** can be adjusted to match a slope of a patient's tibia by rotating the shaft head **125** within the shaft head mating recess **128**. The shaft head **125** can also slide in a medial lateral adjustment **89** direction to change the position of a longitudinal axis of the extension rod **140**, the anchor shaft **130**, the resection frame **150** and the resection guide **170**. Upon the location of a correct position, shaft head adjustment knob **123** can be tightened to restrict further movement of the shaft head **125**. There are many ways that the adjustment of height, length, axial angle, vertical angle and medial/lateral movement of a resection frame **150** and a resection guide **170** can be accomplished and the examples presented here should not be construed as limiting the scope of the invention. In an example, the resection frame **150** is not attached to an anchor assembly **120** or an extension rod **140**. In such an example, the unattached resection frame **150** is positioned and pinned to a joint or bone section.

FIG. **22** illustrates a resection frame **150** pinned to the tibia **12** and the talus **16**. Prior to installation of talus pins **188** and tibial pins **189**, the resection guide **170** can be removed for better views of the ankle joint **10**. The resection frame **150** can include the scribe line **159** which can aid in the positioning of the resection frame **150**. The scribe line **159** can be used to approximate a position of a most distal resectioning cut. The distal cut can remove a portion of bone that relates to the type of fusion spacer that is being considered for use. In an example, a spacer such as the first fusion spacer **100** (see FIG. **3**C) is contemplated and a 5 mm talus cut can be used. In another example a spacer such as the second fusion spacer **200** (see FIG. **5**C) is contemplated and a 10 mm talus cut can be used. The scribe line **159** can be positioned accordingly, using the length adjustment member **131** at the extension rod **140** to move the resection guide **170** proximally or distally (see FIG. **21**). Once such a position has been attained, the frame post **160** can be moved in the anterior/posterior direction to bring the resection frame **150** closer to the bones of the ankle joint **10**. Putting the resection guide **170** close to the bones can give bone cutting elements **190** such as a saw blade **187** greater stability. The anterior/posterior movement of the resection frame **170** can be locked by tightening the proximity adjustment member **146**. All of the previous adjustments can be used to properly align the ankle resection system **250** and also account for any bone deformities which may be present.

Before pins are placed in the resection frame **150**, the foot **191** can be placed at an advantageous angle, such as at 90 degrees to the tibia bone **12**. After positioning of the foot **191** and the ankle resection system **250**, the resection frame **150** can be pinned to the ankle joint **10**. The proximal aperture **151** and the distal aperture **152** can provide pathways for tibial pins **189**. The apertures can provide angles for the pins which provide stability and also ensure that the pins do not interfere with any resection cuts. The resection frame **150** can be pinned to the talus **16** by applying talus pins **188** through the lateral talar aperture **153** and the medial talar aperture **154** (see FIG. **17**). The lateral pin support **165** and medial pin support **166** (see FIG. **17**) can be configured in any length or dimension needed to provide support for the pins **188**. Both the tibial and talar pin apertures can be angled in manufacture to provide stability and holding strength. Any pin aperture can be configured with a support member such as the lateral pin support **165**. Any type of fastener, screw or pin, such as an 80 mm threaded fixation pin, can be used to stabilize the resection frame **150**. Pin apertures can be located at any position or in any number to secure the resection frame to a selected bone or joint. Depending on the type of incision made for the resection, some pins can be inserted percutaneously. An auxiliary pin aperture **142** located on the extension rod **140** can be utilized to pin the tibia **12** and provide more stability to the ankle resection system **250**.

After pins have been placed, an additional adjustment of the resection guide **170** can be made. The resection guide **170** can be moved in the proximal/distal direction by loosening bolts **175** and allowing movement of the resection guide via the proximal/distal adjustment slot **174**. Once a desired position is found, the bolts **175** can be tightened to lock the resection guide **170** to the resection frame **150**. In another example to allow proximal/distal movement of the resection guide **170**, the slotted feature can be located in the resection frame **150**. In another example, the bolts **175** can be studs installed in the resection frame **150**. The distal aspect **179** of the resection guide **170** can be used as a cutting guide for the most distal cut of the procedure, in the present example, a resection of the talus **16**. Before making any bone cuts, a surgeon can x-ray the placement of the assembly as in FIG. **23**. Note how the angle of the bone cutting element **190**, the proximal end of the talus **16**, the distal end of the tibia **12**, the tibial pins **189**, the talus pins**188** and the location of the distal aspect **179** can be clearly seen in the illustration of an x-ray.

Returning to FIG. **22**, a cutting device **192** such as a reciprocating saw can be used with a bone cutting element **190** to resect the proximal end of the talus **16**. The bone cutting element **190** can be a saw blade **187**, a knife, a drill or other device. The planar face of the distal aspect **179** can act as a guide for the talus resection. After the talus resection has been made, the surface of the talus **12** can be inspected to ensure that a clean cut has been made and a good cortical rim exists which can support a fusion spacer. If necessary, the resection guide **170** can be repositioned to make a more distal cut by loosening the bolts **175** and translating the resection guide **170** distally, then re-locking the bolts **175**. With the resection guide **170** still locked in place a surgeon can determine the necessary height of a tibial cut. For a fusion spacer such as the first fusion spacer **100** (see FIG. **3**C), this can be a 7.5 mm slot **193**. When preparing for a fusion spacer such as the second fusion spacer **200** (see FIG. **5**C), a surgeon can choose to use

a 25, 30, 35, or 40 mm height device and will use the corresponding transverse cutting slot **172**. In another example, the resection guide **170** can be configured with a configuration of slots sized and shaped to fit any application of joint or osteotomy resectioning. A surgeon can select the appropriate spacer height by feeling through the respective transverse slots **172** with a saw blade **187** or other instrument to determine where the tibial bone **12** begins.

FIG. **24** illustrates a tibial cut being performed using one of the transverse cutting slots **172**. A surgeon can use a bone cutting element **190** to cut the tibia **12** through the most distal slot on the tibial bone where a flat surface can be achieved to support a fusion spacer or bone implant. The lateral cutting slot **169** and the medial cutting slot **171** can be used to guide the bone cutting element **190** in making lateral cuts to connect the transverse cut. Bone may not be present in some surgeries on the lateral sides. After the resection has been completed, the resection guide **170** can be repositioned away from the opening **155** (see FIG. **22**) of the resection frame **150** and the resection cuts can be examined to ensure that a clean surface exists to support a fusion spacer. Sharp inside corners can be adjusted with a rasp to remove any stress risers.

A surgeon can assess the fit of the resection surgery with the resection frame **150** pinned in place and the resection guide **170** repositioned so as not to block the opening **155** (see FIG. **18**). If additional cutting is needed the resection guide **170** can be replaced and adjusted if necessary for additional cutting. A small provisional spacer **195** such as illustrated in FIG. **25** can be used for a corresponding resection, or a large provisional spacer **196** such as illustrated in FIG. **26** such as can be used after a replacement of a total ankle replacement prosthesis as described above. The provisional spacers **195** and **196** can have a provisional slot **197** configured to provide space for a guide wire or Kirschner wire used in conjunction with a surgical procedure. Such a guide wire **117** can be seen running down the center of an intramedullary nail **194** in FIG. **28**. Returning to FIGS. **25** and **26**, the provisional spacers **195** and **196** can have a radiographic pin **198** which can aid in placement and location of the provisional spacer. FIG. **26** illustrates the distal end of an insertion tool **199** holding a large provisional spacer **196**. The insertion tool **199** can include arms **183** of sufficient length to allow the surgeon to securely grasp the provisional spacer **196** for insertion into the resected bone void **182** (see FIG. **27**). The arms **183** can include retaining members **184** which can act to orient the provisional spacer **196** and provide support for pushing the provisional spacer **196** forward. The distal end of the arms **183** can include a toothed grip **185** for increased stability. The arms **183** can be configured narrow enough while holding the provisional spacer **196**, to allow a surgeon to pass the spacer or an implant through the opening **155** while the resection frame **150** (see FIGS. **24** and **18**) is fixed to the talus **16** and tibia **12**. In practice, a distraction tool **181** as illustrated in FIG. **27** can be used to spread the resected bone void **182** to a desired opening to insert a provisional spacer. Once the provisional spacer is in position, a surgeon can tamp the provisional with impaction tools until it is seated in its desired location. Using the distraction tool **181** and the insertion tool **199**, the surgeon can then remove the provisional spacer **195** or **196**. If the resection is acceptable, the surgeon can remove the resection frame **150**. If more bone cutting is necessary, the surgeon can replace the resection guide **170** and adjust the location utilizing the proximal/distal adjustment slot **174** (see FIG. **24**) or use a different sized or configured resection guide **170**.

FIG. **27** illustrates the insertion of a large fusion spacer **186** into the resected bone void **182**. The resection frame **150** (see FIGS. **24** and **18**) can be removed for this procedure. In another example the resection frame **150** is kept in place for the insertion of the fusion spacer. The distraction tool **181** can be used to spread the resected bones and provide an opening to insert the large fusion spacer **186**, which can be securely held by the insertion tool **199**. The surgeon can tamp large fusion spacer **186** with impaction tools until it is seated in its desired location.

FIG. **28** illustrates an x-ray of an ankle fusion **168**. Fusion spacers or bone implants can be used in conjunction with other fusion devices such as intramedullary nails, bone plates and screws. Fusion spacers can have a hollow interior **116** (see FIG. **3**C) that can be sized to fit an intramedullary nail **195** such as a 10 mm nail, or a nail of any other suitable size and shape to work with a particular surgery. In an ankle joint fusion **168**, after positioning the large fusion spacer **186**, a surgeon can insert an intramedullary nail **195** from the bottom of the foot, through the large fusion spacer **186** and into the intramedullary canal **167** of the tibia **12**. Bone plates can span a joint or an osteotomy procedure and can be attached to the bones as well as a fusion spacer. Bone screws can be placed through bones and into fusion spacers to provide stability.

The above Detailed Description includes references to the accompanying drawings, which form a part of the Detailed Description. The drawings show, by way of illustration, specific embodiments in which the present ankle resection systems and methods can be practiced. These embodiments are also referred to herein as "examples." Such examples can include elements in addition to those shown or described. However, the present inventors also contemplate examples in which only those elements shown or described are provided.

The above Detailed Description is intended to be illustrative, and not restrictive. For example, the above-described examples shown or described (or one or more elements thereof) can be used in combination with each other. Other embodiments can be used, such as by one of ordinary skill in the art upon reviewing the above description. Also, various features or elements can be grouped together to streamline the disclosure. This should not be interpreted as intending that an unclaimed disclosed feature is essential to any claim. Rather, inventive subject matter can lie in less than all features of a particular disclosed embodiment. Thus, the following claims are hereby incorporated into the Detailed Description, with each claim standing on its own as a separate embodiment. The scope of the invention should be determined with reference to the appended claims, along with the full scope of equivalents to which such claims are entitled.

While this invention has been described as having exemplary designs, the present invention can be further modified within the spirit and scope of this disclosure. This application is therefore intended to cover any variations, uses, or adaptations of the invention using its general principles. Further, this application is intended to cover such departures from the present disclosure as come within known or customary practice in the art to which this invention pertains and which fall within the limits of the appended claims.

What is claimed is:

1. An ankle resection system, comprising:

a proximal tibial anchor;

a resection frame connected to the proximal tibial anchor, the resection frame anchorable to the distal tibia and/or the talus and providing an opening through which a bone cutting element can pass for cutting underlying bone; and

a resection guide which includes one or more cutting slots including a first cutting slot, said first cutting slot including an elongate opening in a top exterior surface of the

resection guide, said elongate opening extending in an elongate fashion along the top exterior surface of the resection guide to provide an elongate entryway into the first cutting slot, the resection guide coupled to the resection frame with the one or more cutting slots positioned over the opening in the resection frame so that the bone cutting element can pass through the one or more cutting slots and through the opening in the resection frame for cutting the distal tibia and/or the talus,

wherein the resection guide is locked to the resection frame with the one or more cutting slots held in a first position over the opening in the resection frame such that, when the resection frame anchored to the distal tibia and/or the talus, the bone cutting element can pass through the one or more cutting slots and through the opening in the resection frame for making one or more resection cuts in the distal tibia and/or the talus that each extend in an elongate fashion along an exterior surface of the distal tibia and/or the talus,

wherein the resection guide and the resection frame are unlockable from one another and upon being unlocked from one another are translatable relative to one another in a longitudinal direction for repositioning the one or more cutting slots from said first position to a second position over the opening in the resection frame, and wherein the resection guide can be relocked to the resection frame with the one or more cutting slots held in said second position over the opening in the resection frame.

2. The ankle resection system of claim **1**, wherein the resection frame being connected to the proximal tibial anchor comprises a separate elongated rod coupled to the proximal tibial anchor and the resection frame.

3. The ankle resection system of claim **2**, wherein the proximal tibial anchor includes a hollow tubular section in which a proximal end of said elongated rod is slidably received to permit adjustment of the distance between the proximal tibial anchor and the resection frame.

4. The ankle resection system of claim **2**, wherein a proximal end of the elongated rod is coupled to the proximal tibial anchor so as to permit adjustment of said proximal end in a medial-lateral direction with respect to the proximal tibial anchor.

5. The ankle resection system of claim **2**, wherein a distal end of the elongated rod is coupled to the resection frame so as to permit adjustment of said distal end in an anterior-posterior direction with respect to the resection frame.

6. The ankle resection of claim **1**, wherein the one or more cutting slots includes a medial cutting slot and a lateral cutting slot which are both angled relative to the first cutting slot along the top exterior surface of the resection guide.

7. The ankle resection of claim **1**, wherein the resection frame comprises a first talus pin aperture with a longitudinal axis that extends in a direction non-parallel to a longitudinal axis of a second talus pin aperture.

8. The ankle resection of claim **1**, wherein the resection frame includes a proximal body portion with a medial leg and a lateral leg of the resection frame extending from the proximal body portion, and with the opening in the resection frame extending between said medial leg and said lateral leg.

9. The ankle resection system of claim **8**, wherein the resection guide extends over said medial leg and said lateral leg with a posterior body portion of the resection guide extending down into the opening in the resection frame.

10. The ankle resection system of claim **1** in combination with a bone cutting element that includes a blade extending through the first cutting slot in a direction transverse to the top exterior surface of the resection guide.

11. The ankle resection system of claim **1**, wherein the one or more cutting slots includes a multiplicity of cutting slots that each include an elongate opening in the top exterior surface of the resection guide, the elongate openings of the multiplicity of cutting slots extending parallel to one another along the top exterior surface of the resection guide.

12. An ankle resection system, comprising:

a proximal tibial anchor;

a resection frame connected to the proximal tibial anchor, the resection frame anchorable to the distal tibia and/or the talus and providing an opening through which a bone cutting element can pass for cutting underlying bone; and

a resection guide which includes at least a first cutting slot, the resection guide coupled to the resection frame with the first cutting slot locked in a stationary position relative to the resection frame and positioned over the opening in the resection frame so that, with the resection frame anchored to the distal tibia and/or the talus and with the first cutting slot locked in said stationary position over the opening in the resection frame, the bone cutting element can pass through the first cutting slot and through the opening in the resection frame for making one or more resection cuts in the distal tibia and/or the talus that each extend in an elongate fashion along an exterior surface of the distal tibia and/or the talus,

wherein said stationary position is a first position relative to the resection frame, and wherein the first cutting slot can be unlocked from said first position and subsequently moved from said first position to a second position relative to the resection frame and relocked in said second position for repositioning the first cutting slot over the opening in the resection frame.

13. An ankle resection system, comprising:

a proximal tibial anchor;

a resection frame connected to the proximal tibial anchor, the resection frame anchorable to the distal tibia and/or the talus and providing an opening through which a bone cutting element can pass for cutting underlying bone; and

a resection guide locked to the resection frame in a first position, the resection guide including a first side for facing away from the distal tibia and/or the talus when the resection frame is anchored to the distal tibia and/or the talus, wherein at least a first elongate opening is located in an exterior surface of the first side of the resection guide, said first elongate opening extending along said exterior surface in an elongate fashion and providing access to a corresponding first cutting slot that extends through the resection guide so that the bone cutting element can pass through the first cutting slot and through the opening in the resection frame for making one or more resection cuts in the distal tibia and/or the talus,

wherein the resection guide can be unlocked from said first position and subsequently moved from said first position to a second position and relocked in said second position for repositioning the first cutting slot over the opening in the resection frame.

14. The ankle resection system of claim **13**, wherein multiple elongate openings are located in the exterior surface of the first side of the resection guide and provide access to a corresponding multiplicity of cutting slots in the resection guide, said multiple elongate openings extending parallel to one another along said exterior surface of the first side of the resection guide.

* * * * *