US009936994B2

(12) **United States Patent**
Smith et al.

(10) **Patent No.: US 9,936,994 B2**
(45) **Date of Patent: Apr. 10, 2018**

(54) **BONE POSITIONING GUIDE**

(71) Applicant: **Treace Medical Concepts, Inc.**, Ponte Vedra Beach, FL (US)

(72) Inventors: **W. Bret Smith**, Lexington, SC (US); **Paul Dayton**, Fort Dodge, IA (US); **Sean F. Scanlan**, Ponte Vedra Beach, FL (US); **F. Barry Bays**, Collierville, TN (US); **Carlos Eduardo Gil**, Jacksonville, FL (US); **John T. Treace**, Ponte Vedra Beach, FL (US)

(73) Assignee: **Treace Medical Concepts, Inc.**, Ponte Vedra Beach, FL (US)

(*) Notice: Subject to any disclaimer, the term of this patent is extended or adjusted under 35 U.S.C. 154(b) by 0 days.

(21) Appl. No.: **15/210,426**

(22) Filed: **Jul. 14, 2016**

(65) **Prior Publication Data**

US 2017/0014173 A1 Jan. 19, 2017

Related U.S. Application Data

(63) Continuation of application No. 14/981,335, filed on Dec. 28, 2015.

(Continued)

(51) **Int. Cl.**
A61B 17/88 (2006.01)
A61B 17/17 (2006.01)

(Continued)

(52) **U.S. Cl.**
CPC ***A61B 17/8866*** (2013.01); ***A61B 17/151*** (2013.01); ***A61B 17/1739*** (2013.01);

(Continued)

(58) **Field of Classification Search**
CPC A61B 17/17; A61B 17/88; A61B 17/1728; A61B 17/1739; A61B 17/8866
See application file for complete search history.

(56) **References Cited**

U.S. PATENT DOCUMENTS

4,159,716 A * 7/1979 Borchers A61B 17/1682 606/104
4,187,840 A 2/1980 Watanabe

(Continued)

FOREIGN PATENT DOCUMENTS

AU 2009227957 B2 7/2014
CA 2491824 A1 9/2005

(Continued)

OTHER PUBLICATIONS

Albano et al., "Biomechanical Study of Transcortical or Transtrabecular Bone Fixation of Patellar Tendon Graft wih Bioabsorbable Pins in ACL Reconstruction in Sheep," Revista Brasileira de Ortopedia (Rev Bras Ortop.) vol. 47, No. 1, 2012, pp. 43-49.

(Continued)

Primary Examiner — Christopher Beccia
(74) *Attorney, Agent, or Firm* — Fredrikson & Byron, P.A.

(57) **ABSTRACT**

A bone positioning guide may include a main body member, a shaft, and a bone engagement member. The shaft can be movably connected to the main body member and have the bone engagement member rotatably coupled to its distal end. The bone engagement member can have a surface configured to engage a bone. The main body member can also include a tip opposite the bone engagement member for engaging a second bone. In use, the bone engagement member may be positioned in contact with a medial side of a first metatarsal while the tip is positioned in contact with a lateral side of a different metatarsal, such as a second metatarsal. The shaft can then be moved to advance the bone engagement member toward the tip, causing realignment of the first metatarsal.

16 Claims, 42 Drawing Sheets

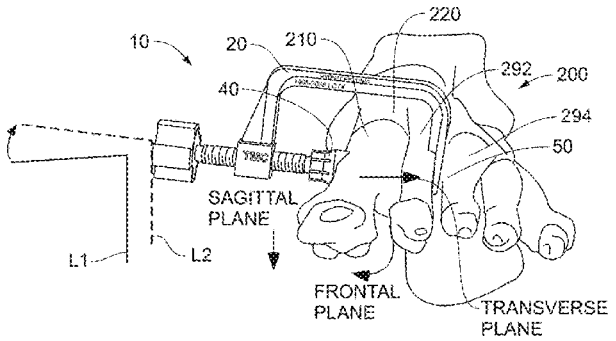

Paragon 28, Inc. v. Treace Medical Concepts, Inc.
IPR2026-00194
Treace Ex. 2002

Related U.S. Application Data

(60) Provisional application No. 62/192,319, filed on Jul. 14, 2015, provisional application No. 62/205,338, filed on Aug. 14, 2015.

(51) **Int. Cl.**

A61B 17/80	(2006.01)
A61B 17/15	(2006.01)
A61B 17/00	(2006.01)
A61B 17/90	(2006.01)
A61B 17/68	(2006.01)
A61B 17/02	(2006.01)
A61B 17/56	(2006.01)

(52) **U.S. Cl.**

CPC ***A61B 17/8061*** (2013.01); *A61B 17/025* (2013.01); *A61B 17/1728* (2013.01); *A61B 2017/00367* (2013.01); *A61B 2017/565* (2013.01); *A61B 2017/681* (2013.01); *A61B 2017/90* (2013.01)

(56) **References Cited**

U.S. PATENT DOCUMENTS

4,338,927 A 7/1982 Volkov et al.
4,570,624 A * 2/1986 Wu A61B 17/1728 606/96
4,627,425 A 12/1986 Reese
4,757,810 A 7/1988 Reese
4,952,214 A 8/1990 Comparetto
4,978,347 A 12/1990 Ilizarov
5,021,056 A 6/1991 Hofmann et al.
5,112,334 A 5/1992 Alchermes et al.
5,254,119 A 10/1993 Schreiber
5,312,412 A 5/1994 Whipple
5,358,504 A 10/1994 Paley et al.
5,364,402 A 11/1994 Mumme et al.
5,413,579 A 5/1995 Du Toil
5,449,360 A 9/1995 Schreiber
H1706 H 1/1998 Mason
5,810,822 A 9/1998 Mortier
5,893,553 A 4/1999 Pinkous
5,935,128 A 8/1999 Carter et al.
6,030,391 A 2/2000 Brainard et al.
6,719,773 B1 4/2004 Boucher et al.
6,743,233 B1 6/2004 Baldwin et al.
7,033,361 B2 4/2006 Collazo
7,182,766 B1 2/2007 Mogul
7,241,298 B2 7/2007 Nemec et al.
7,377,924 B2 5/2008 Raistrick et al.
7,465,303 B2 12/2008 Riccione et al.
7,641,660 B2 1/2010 Lakin et al.
D610,257 S 2/2010 Horton
7,686,811 B2 3/2010 Byrd et al.
D629,900 S 12/2010 Fisher
7,972,338 B2 7/2011 O'Brien
D646,389 S 10/2011 Claypool et al.
8,057,478 B2 11/2011 Kuczynski et al.
D651,315 S 12/2011 Bertoni et al.
D651,316 S 12/2011 May et al.
8,080,010 B2 12/2011 Schulz et al.
8,123,753 B2 2/2012 Dubriske
8,137,406 B2 3/2012 Novak et al.
8,147,530 B2 4/2012 Strnad et al.
8,167,918 B2 5/2012 Strnad et al.
8,172,848 B2 5/2012 Tomko et al.
8,192,441 B2 6/2012 Collazo
8,197,487 B2 6/2012 Poncet et al.
8,231,663 B2 7/2012 Kay et al.
8,246,561 B1 8/2012 Agee et al.
D666,721 S 9/2012 Wright et al.
8,262,664 B2 9/2012 Justin et al.
8,282,644 B2 10/2012 Edwards
8,282,645 B2 10/2012 Lawrence et al.
8,292,966 B2 10/2012 Morton
8,313,492 B2 11/2012 Wong et al.
8,323,289 B2 12/2012 Re
8,337,503 B2 12/2012 Lian
8,343,159 B2 1/2013 Bennett
8,377,105 B2 2/2013 Büscher
D679,395 S 4/2013 Wright et al.
8,435,246 B2 5/2013 Fisher et al.
8,475,462 B2 7/2013 Thomas et al.
8,523,870 B2 9/2013 Green, II et al.
D694,884 S 12/2013 Mooradian et al.
D695,402 S 12/2013 Dacosta et al.
8,652,142 B2 2/2014 Geissler
D701,303 S 3/2014 Cook
8,672,945 B2 3/2014 LaVallee et al.
8,696,716 B2 4/2014 Kartalian et al.
D705,929 S 5/2014 Frey
8,715,363 B2 5/2014 Ratron et al.
8,728,084 B2 5/2014 Berelsman et al.
8,758,354 B2 6/2014 Habegger et al.
8,764,763 B2 7/2014 Wong et al.
8,771,279 B2 7/2014 Philippon et al.
8,784,427 B2 7/2014 Fallin et al.
8,784,457 B2 7/2014 Graham
8,795,286 B2 8/2014 Sand et al.
8,801,727 B2 8/2014 Chan et al.
8,808,303 B2 8/2014 Stemniski et al.
8,828,012 B2 9/2014 May et al.
8,858,602 B2 10/2014 Weiner et al.
8,882,778 B2 11/2014 Ranft
8,998,903 B2 4/2015 Price et al.
8,998,904 B2 4/2015 Leetser et al.
9,023,052 B2 5/2015 Lietz et al.
9,044,250 B2 6/2015 Olsen et al.
9,060,822 B2 6/2015 Lewis et al.
9,089,376 B2 7/2015 Medoff et al.
9,101,421 B2 8/2015 Blacklidge
9,107,715 B2 8/2015 Blitz et al.
D765,844 S 9/2016 DaCosta
D766,434 S 9/2016 DaCosta
D766,437 S 9/2016 DaCosta
D766,438 S 9/2016 DaCosta
2002/0198531 A1 12/2002 Millard et al.
2004/0039394 A1 2/2004 Conti et al.
2004/0097946 A1 5/2004 Dietzel et al.
2005/0004676 A1 1/2005 Schon et al.
2005/0075641 A1 4/2005 Singhatat et al.
2005/0101961 A1 5/2005 Huebner et al.
2005/0149042 A1 7/2005 Metzger
2005/0228389 A1 10/2005 Stiernborg
2005/0273112 A1 12/2005 McNamara
2006/0206044 A1 9/2006 Simon
2006/0217733 A1 9/2006 Plassky et al.
2006/0229621 A1 10/2006 Cadmus
2006/0241607 A1 10/2006 Myerson et al.
2006/0241608 A1 10/2006 Myerson et al.
2006/0264961 A1 11/2006 Murray-Brown
2007/0233138 A1 10/2007 Figueroa et al.
2007/0265634 A1 11/2007 Weinstein
2007/0276383 A1 11/2007 Rayhack
2008/0091197 A1 4/2008 Coughlin
2008/0140081 A1 6/2008 Heavener
2008/0208252 A1 8/2008 Holmes
2008/0262500 A1 10/2008 Callazo
2008/0269908 A1 10/2008 Warburton
2009/0036893 A1 2/2009 Kartalian et al.
2009/0093849 A1 4/2009 Grabowski
2009/0105767 A1 4/2009 Reiley
2009/0198244 A1 8/2009 Leibel
2009/0222047 A1 9/2009 Graham
2009/0254092 A1 10/2009 Llorach
2009/0254126 A1 10/2009 Orbay et al.
2009/0287309 A1 11/2009 Walch et al.
2010/0069910 A1 3/2010 Hasselman
2010/0121334 A1 5/2010 Couture et al.
2010/0130981 A1 5/2010 Richards
2010/0152782 A1 6/2010 Stone et al.
2010/0168799 A1 7/2010 Schumer
2010/0185245 A1 7/2010 Paul et al.

(56) **References Cited**

U.S. PATENT DOCUMENTS

2010/0256687	A1	10/2010	Neufeld et al.	
2010/0324556	A1	12/2010	Tyber et al.	
2011/0077656	A1*	3/2011	Sand	A61B 17/1682 606/96
2011/0093084	A1	4/2011	Morton	
2011/0245835	A1	10/2011	Dodds et al.	
2011/0288550	A1	11/2011	Orbay et al.	
2011/0301648	A1	12/2011	Lofthouse et al.	
2012/0016426	A1	1/2012	Robinson	
2012/0065689	A1	3/2012	Prasad et al.	
2012/0078258	A1	3/2012	Lo et al.	
2012/0123420	A1	5/2012	Honiball	
2012/0123484	A1	5/2012	Lietz et al.	
2012/0130376	A1	5/2012	Loring et al.	
2012/0130383	A1	5/2012	Budoff	
2012/0184961	A1	7/2012	Johannaber	
2012/0239045	A1	9/2012	Li	
2012/0253350	A1	10/2012	Anthony et al.	
2012/0265301	A1	10/2012	Demers et al.	
2013/0012949	A1	1/2013	Fallin et al.	
2013/0035694	A1	2/2013	Grimm et al.	
2013/0085499	A1	4/2013	Lian	
2013/0150903	A1	6/2013	Vincent	
2013/0158556	A1	6/2013	Jones et al.	
2013/0165936	A1	6/2013	Myers	
2013/0165938	A1	6/2013	Chow et al.	
2013/0172942	A1	7/2013	Lewis et al.	
2013/0184714	A1	7/2013	Kaneyama et al.	
2013/0190765	A1	7/2013	Harris et al.	
2013/0190766	A1	7/2013	Harris et al.	
2013/0204259	A1	8/2013	Zajac	
2013/0231668	A1	9/2013	Olsen et al.	
2013/0237987	A1	9/2013	Graham	
2013/0237989	A1	9/2013	Bonutti	
2013/0267956	A1	10/2013	Terrill et al.	
2013/0310836	A1	11/2013	Raub et al.	
2013/0325076	A1	12/2013	Plamer et al.	
2013/0331845	A1	12/2013	Horan et al.	
2013/0338785	A1	12/2013	Wong	
2014/0005672	A1	1/2014	Edwards et al.	
2014/0025127	A1	1/2014	Richter et al.	
2014/0039501	A1	2/2014	Schickendantz et al.	
2014/0039561	A1	2/2014	Weiner et al.	
2014/0046387	A1	2/2014	Waizenegger	
2014/0074099	A1	3/2014	Vigneron et al.	
2014/0074101	A1	3/2014	Collazo	
2014/0094861	A1	4/2014	Fallin	
2014/0094924	A1	4/2014	Hacking et al.	
2014/0163563	A1	6/2014	Reynolds et al.	
2014/0171953	A1	6/2014	Gonzalvez et al.	
2014/0180342	A1	6/2014	Lowery et al.	
2014/0194884	A1	7/2014	Martin et al.	
2014/0207144	A1	7/2014	Lee et al.	
2014/0249537	A1	9/2014	Wong et al.	
2014/0257509	A1	9/2014	Dacosta et al.	
2014/0276815	A1	9/2014	Riccione	
2014/0276853	A1	9/2014	Long et al.	
2014/0277176	A1	9/2014	Buchanan et al.	
2014/0277214	A1	9/2014	Helenbolt et al.	
2014/0296995	A1	10/2014	Reiley et al.	
2014/0336658	A1	11/2014	Luna et al.	
2015/0032168	A1	1/2015	Orsak et al.	
2015/0045839	A1	2/2015	Dacosta et al.	
2015/0051650	A1	2/2015	Verstreken et al.	
2015/0066094	A1	3/2015	Prandi et al.	
2015/0112446	A1	4/2015	Melamed et al.	
2015/0119944	A1	4/2015	Geldwert	
2015/0142064	A1	5/2015	Perez et al.	
2015/0150608	A1	6/2015	Sammarco	
2015/0182273	A1	7/2015	Stemniski et al.	
2015/0223851	A1	8/2015	Hill et al.	
2015/0245858	A1	9/2015	Weiner et al.	
2016/0015426	A1	1/2016	Dayton	
2016/0151165	A1	6/2016	Fallin et al.	
2016/0175089	A1	6/2016	Fallin et al.	
2016/0192950	A1	7/2016	Dayton et al.	
2016/0199076	A1	7/2016	Fallin et al.	
2016/0213384	A1	7/2016	Fallin et al.	
2016/0235414	A1	8/2016	Hatch et al.	
2016/0242791	A1	8/2016	Fallin et al.	
2016/0256204	A1	9/2016	Patel et al.	
2016/0354127	A1*	12/2016	Lundquist	A61B 17/7233
2017/0042599	A1	2/2017	Bays et al.	
2017/0079669	A1	3/2017	Bays et al.	

FOREIGN PATENT DOCUMENTS

CA	2854997	A1	5/2013
CH	695846	A5	9/2006
CN	2930668	Y	8/2007
CN	201558162	U	8/2010
CN	201572172	U	9/2010
CN	201586060	U	9/2010
CN	201912210	U	8/2011
CN	202801773	U	3/2013
CN	103462675	A	12/2013
CN	103505276	A	1/2014
CN	203458450	U	3/2014
CN	102860860	B	5/2014
CN	203576647	U	5/2014
CN	104490460	A	4/2015
CN	104510523	A	4/2015
CN	104523327	A	4/2015
CN	104546102	A	4/2015
CN	204379413	U	6/2015
CN	204410951	U	6/2015
CN	204428143	U	7/2015
CN	204428144	U	7/2015
CN	204428145	U	7/2015
CN	204446081	U	7/2015
EP	0685206	B1	9/2000
EP	1897509	B1	7/2009
EP	2124772	A1	12/2009
EP	2124832	B1	8/2012
EP	2632349	A1	9/2013
EP	2665428	A1	11/2013
EP	2742878	A1	6/2014
EP	2750617	A1	7/2014
EP	2849684	A1	3/2015
FR	2362616	A1	3/1978
FR	2764183	B1	11/1999
FR	3030221	A1	6/2016
GB	2154143	A	9/1985
GB	2154144	A	9/1985
IN	200903719	P1	6/2009
IN	200904479	P2	5/2010
IN	140/SELNP/2012	P1	2/2013
IN	2004/KOLNP/2013	P2	11/2013
JP	4134243	B2	8/2008
JP	4162380	B2	10/2008
JP	2011092405	A	5/2011
JP	2011523889	A	8/2011
JP	4796943	B2	10/2011
JP	5466647	B2	4/2014
JP	2014511207	A	5/2014
JP	2014521384	A	8/2014
JP	5628875	B2	11/2014
KR	100904142	B1	6/2009
RU	2098036	C1	12/1997
RU	2195892	C2	1/2003
RU	2320287	C1	3/2008
RU	2321366	C2	4/2008
RU	2321369	C1	4/2008
RU	2346663	C2	2/2009
RU	2412662	C1	2/2011
SU	1333328	A2	8/1987
WO	0166022	A1	9/2001
WO	2008051064	A1	5/2008
WO	2009032101	A2	3/2009
WO	2011037885	A1	3/2011
WO	2012029008	A1	3/2012
WO	2013090392	A1	6/2013
WO	2013134387	A1	9/2013
WO	2013169475	A1	11/2013

(56) **References Cited**

FOREIGN PATENT DOCUMENTS

WO	2014020561	A1	2/2014
WO	2014022055	A1	2/2014
WO	2014035991	A1	3/2014
WO	2014085882	A1	6/2014
WO	2014147099	A1	9/2014
WO	2014152219	A2	9/2014
WO	2014152535	A1	9/2014
WO	2014177783	A1	11/2014
WO	2014200017	A1	12/2014
WO	2015105880	A1	7/2015
WO	2015127515	A2	9/2015

OTHER PUBLICATIONS

Anderson et al., "Uncemented Star Total Ankle Prostheses," The Journal of Bone and Joint Surgery, vol. 86(1, Suppl 2), Sep. 2004, pp. 103-111, (Abstract Only).

Dayton et al., "Relationship Of Frontal Plane Rotation Of First Metatarsal To Proximal Articular Set Angle And Hallux Alignment In Patients Undergoing Tarsometatarsal Arthrodesis For Hallux Abducto Valgus: A Case Series And Critical Review Of The Literature," The Journal of Foot and Ankle Surgery, vol. 52, No. 3, May/Jun. 2013, pp. 348-354.

De Geer et al., "A New Measure of Tibial Sesamoid Position in Hallux Valgus in Relation to the Coronal Rotation of be First Metatarsal in Ct Scans," Foot and Ankle International, Mar. 26, 2015, 9 pages_.

Dobbe et al. "Patient-Tailored Plate For Bone Fixation And Accurate 3D Positioning In Corrective Osteotomy," Medical and Biological Engineering and Computing, vol. 51, No. 1-2, Feb. 2013, pp. 19-27, (Abstract Only).

EBI Extra Small Rail Fixator, Biomet Trauma, retrieved Dec. 19, 2014, from the Internet: <http://footandanklefixation.com/productibiomet-trauma-ebi-extra-small-rail-fixator>, 7 pages.

Garthwait, "Accu-Cut System Facilitates Enhanced Precision," Podiatry Today, vol. 18, No. 6, Jun. 2005, 6 pages.

Gonzalez Del Pino et al., "Variable Angle Locking Intercarpal Fusion System for Four-Corner Arthrodesis: Indications and Surgical Technique," Journal of Wrist Surgery, vol. 1, No. 1, Aug. 2012, pp. 73-78.

Grondal et al., "A Guide Plate for Accurate Positioning of First Metatarsophalangeal Joint during Fusion," Operative Orthopädie Und Traumatologie, vol. 16, No. 2, 2004, pp. 167-178 (Abstract Only).

"Hat-Trick Lesser Toe Repair System," Smith & Nephew, Brochure, Aug. 2014, 12 pages.

"Hoffmann II Compact External Fixation System," Stryker, Brochure, Literature No. 5075-1-500, 2006, 12 pages.

"Hoffmann II Micro Lengthener," Stryker, Operative Technique, Literature No. 5075-2-002, 2008, 12 pages.

"Hoffmann Small System External Fixator Orthopedic Instruments," Stryker, retrieved Dec. 19, 2014, from the Internet: <http://www.alibaba.com/product-detail/Stryker-Hoffmann-Small-System-External-Fixator_1438850129.html>, 3 pages.

Yakacki et al. "Compression Forces of Internal and External Ankle Fixation Devices with Simulated Bone Resorption," Foot and Ankle International, vol. 31, No. 1, Jan. 2010, pp. 76-85, (Abstract Only).

"Lag Screw Target Bow," Stryker Leibinger GmbH & Co. KG, Germany 2004, 8 pages.

MAC (Multi Axial Correction) Fixation System, Biomet Trauma, retrieved Dec. 19, 2014, from the Internet: <http://footandanklefixation.com/product/biomet-trauma-mac-multi-axial-correction-fixation-system>, 7 pages.

Michelangelo Bunion System, Surgical Technique, Instratek Incorporated, publication date unknown, 4 pages.

Mini Joint Distractor, Arthrex, retrieved Dec. 19, 2014, from the Internet: <http://www.arthrex.com/foot-ankle/mini-joint-distractor/products>, 2 pages.

MiniRail System, Small Bone Innovations, Surgical Technique, 2010, 24 pages.

Modular Rail System: External Fixator, Smith & Nephew, Surgical Technique, 2013, 44 pages.

Monnich et al., "A Hand Guided Robotic Planning System for Laser Osteotomy in Surgery," World Congress on Medical Physics and Biomedical Engineering vol. 25/6: Surgery, Nimimal Invasive Interventions, Endoscopy and Image Guided Therapy, Sep. 7-12, 2009, pp. 59-62, (Abstract Only).

Moore et al., "Effect Of Ankle Flexion Angle On Axial Alignment Of Total Ankle Replacement," Foot and Ankle International, vol. 31, No. 12, Dec. 2010, pp. 1093-1098, (Abstract Only).

Rx-Fix Mini Rail External Fixator, Wright Medical Technology, Brochure, Aug. 15, 2014, 2 pages.

Scanlan et al. "Technique Tip: Subtalar Joint Fusion Using a Parallel Guide and Double Screw Fixation," The Journal of Foot and Ankle Surgery, vol. 49, Issue 3, May-Jun. 2010, pp. 305-309, (Abstract Only).

Siddiqui et al. "Fixation Of Metatarsal Fracture With Bone Plate In A Dromedary Heifer," Open Veterinary Journal, vol. 3, No. 1, 2013, pp. 17-20.

Sidekick Stealth Rearfoot Fixator, Wright Medical Technology, Surgical Technique, Dec. 2, 2013, 20 pages.

Simpson et al., "Computer-Assisted Distraction Ostegogenesis by Ilizarov's Method," International Journal of Medical Robots and Computer Assisted Surgery, vol. 4, No. 4, Dec. 2008, pp. 310-320, (Abstract Only).

Small Bone External Fixation System, Acumed, Surgical Technique, Effective date Sep. 2014, 8 pages.

Stableloc External Fixation System, Acumed, Product Overview, Effective date Sep. 2015, 4 pages.

Stahl et al., "Derotation Of Post-Traumatic Femoral Deformities By Closed Intramedullary Sawing," Injury, vol. 37, No. 2, Feb. 2006, pp. 145-151, (Abstract Only).

TempFix Spanning the Ankle Joint Half Pin and Transfixing Pin Techniques, Biomet Orthopedics, Surgical Technique, 2012, 16 pages.

Weber et al., "A Simple System For Navigation Of Bone Alignment Osteotomies Of The Tibia," International Congress Series, vol. 1268, Jan. 2004, pp. 608-613, (Abstract Only).

Whipple et al., "Zimmer Herbert Whipple Bone Screw System: Surgical Techniques for Fixation of Scaphoid and Other Small Bone Fractures," Zimmer, 2003, 59 pages.

International Patent Application No. PCT/US2016/042280, International Search Report and Written Opinion dated Oct. 4, 2016, 11 pages.

Dayton et al., "Is Our Current Paradigm for Evaluation and Management of the Bunion Deformity Flawed? A Discussion of Procedure Philosophy Relative to Anatomy," The Journal of Foot and Ankle Surgery, vol. 54, 2015, pp. 102-111.

Dayton et al., "Observed Changes in Radiographic Measurements of the First Ray after Frontal and Transverse Plane Rotation of the Hallux: Does the Hallux Drive the Metatarsal in a Bunion Deformity?," The Journal of Foot and Ankle Surgery, vol. 53, 2014, pp. 584-587.

Dayton et al., "Quantitative Analysis of the Degree of Frontal Rotation Required to Anatomically Align the First Metatarsal Phalangeal Joint During Modified Tarsal-Metatarsal Arthrodesis Without Capsular Balancing," The Journal of Foot and Ankle Surgery, 2015, pp. 1-6.

DiDomenico et al., "Correction of Frontal Plane Rotation of Sesamoid Apparatus during the Lapidus Procedure: A Novel Approach," The Journal of Foot and Ankle Surgery, vol. 53, 2014, pp. 248-251.

Kim et al., "A New Measure of Tibial Sesamoid Position in Hallux Valgus in Relation to the Coronal Rotation of the First Metatarsal in CT Scans," Foot and Ankle International, vol. 36, No. 8, 2015, pp. 944-952.

Mortier et al., "Axial Rotation of the First Metatarsal Head in a Normal Population and Hallux Valgus Patients," Orthopaedics and Traumatology: Surgery and Research, vol. 98, 2012, pp. 677-683.

(56) **References Cited**

OTHER PUBLICATIONS

Okuda et al., "Postoperative Incomplete Reduction of the Sesamoids as a Risk Factor for Recurrence of Hallux Valgus," The Journal of Bone and Joint Surgery, vol. 91-A, No. 1, Jul. 2009, pp. 1637-1645.
Scranton Jr. et al, "Anatomic Variations in the First Ray: Part I. Anatomic Aspects Related to Bunion Surgery," Clinical Orthopaedics and Related Research, vol. 151, Sep. 1980, pp. 244-255.
Talbot et al.,"Assessing Sesamoid Subluxation: How Good is the AP Radiograph?," Foot and Ankle International, vol. 19, No. 8, Aug. 1998, pp. 547-554.
Yasuda et al., "Proximal Suination Osteotomy of the First Metatarsal for Hallux Valgus," Foot and Ankle International, vol. 36, No. 6, Jun. 2015, pp. 696-704.

* cited by examiner

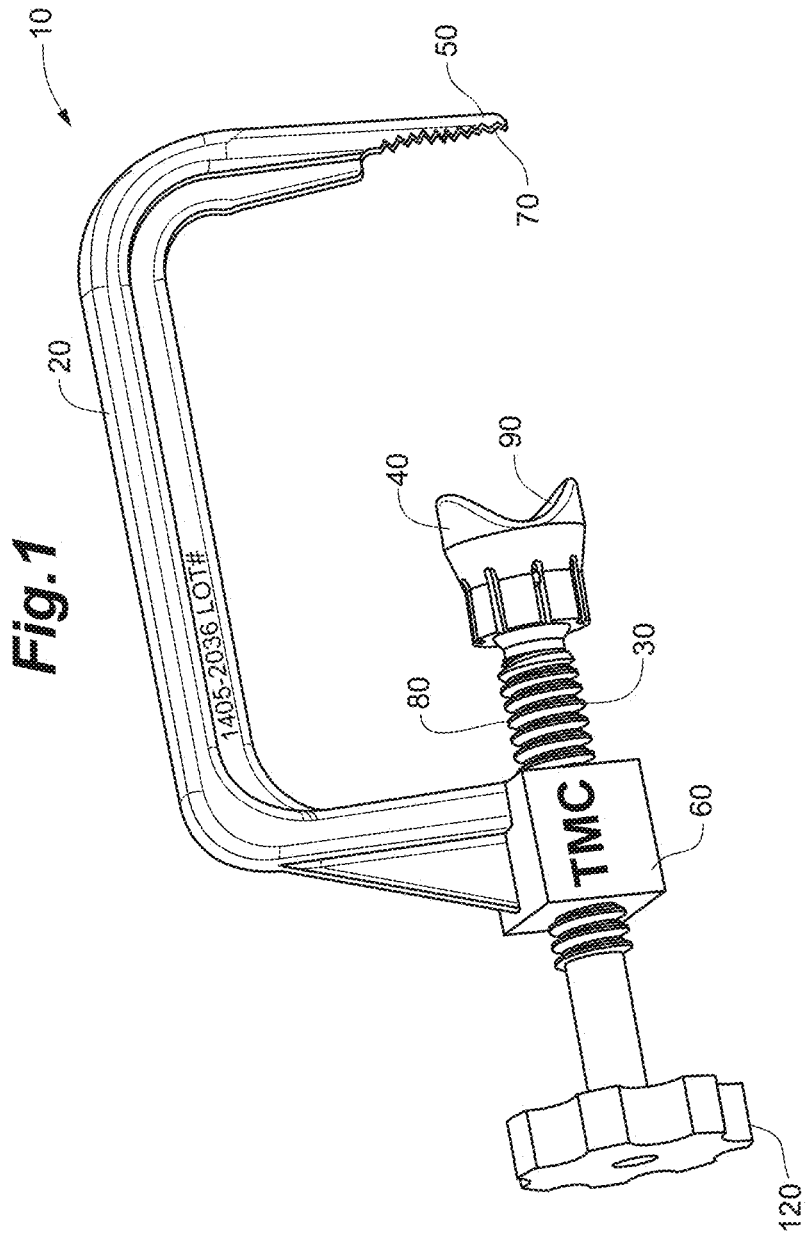

Fig.1

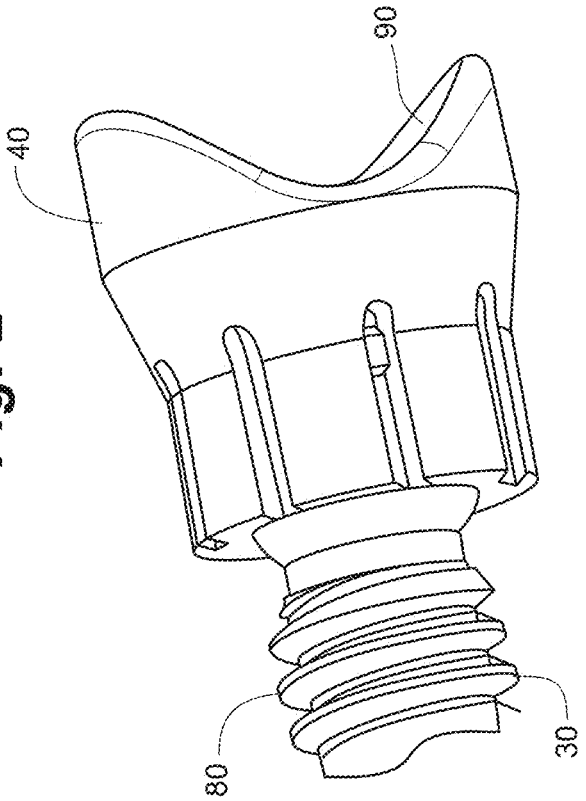

Fig. 2

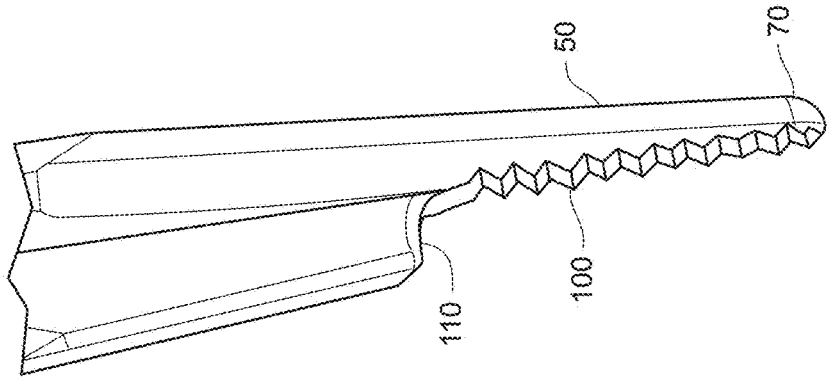

Fig. 3A

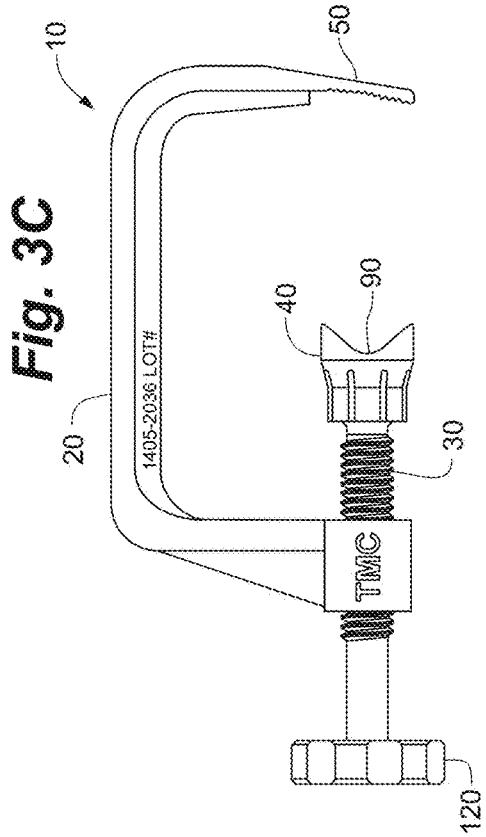
10
50
20
1405-2036 LOT#
40
90
30
TMC
120

Fig. 3C

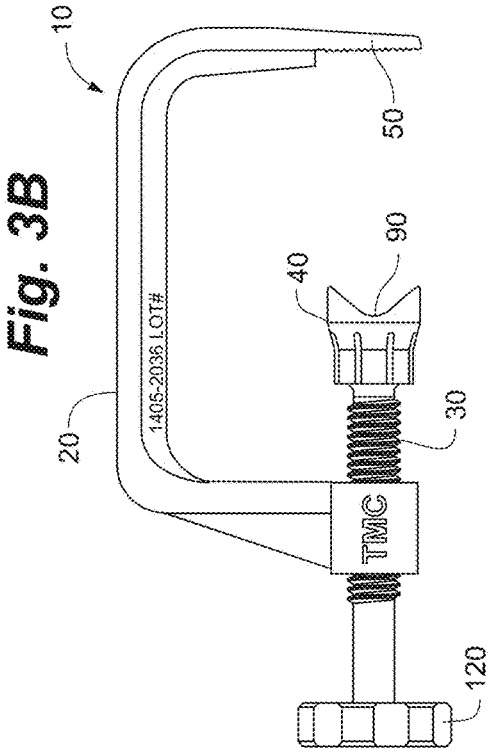
10
50
20
1405-2036 LOT#
40
90
30
TMC
120

Fig. 3B

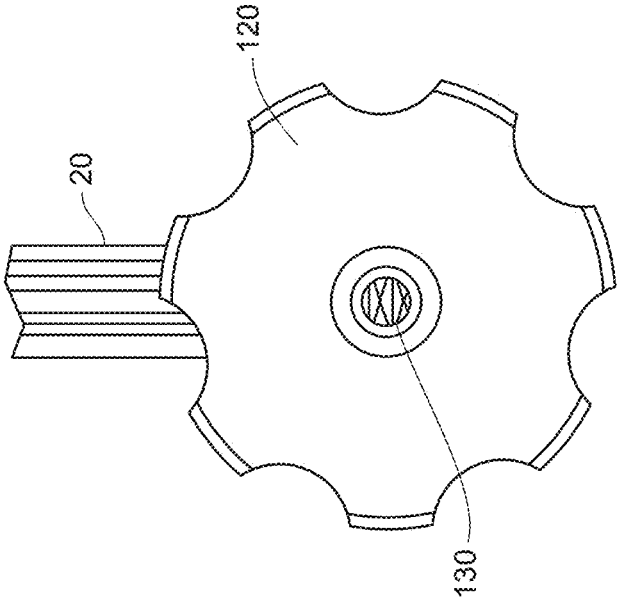

Fig. 4

Fig. 5

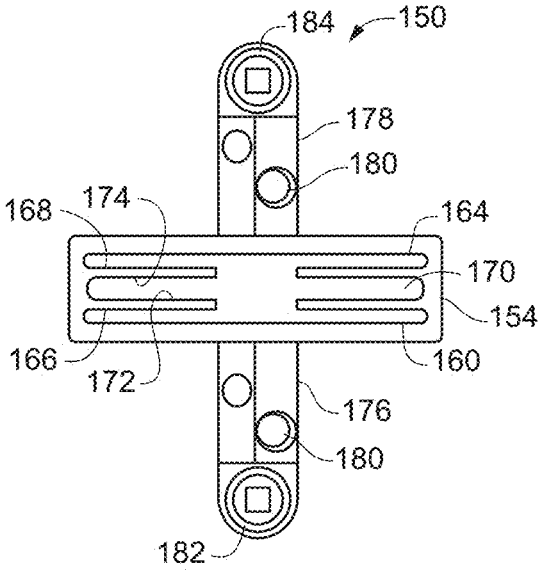

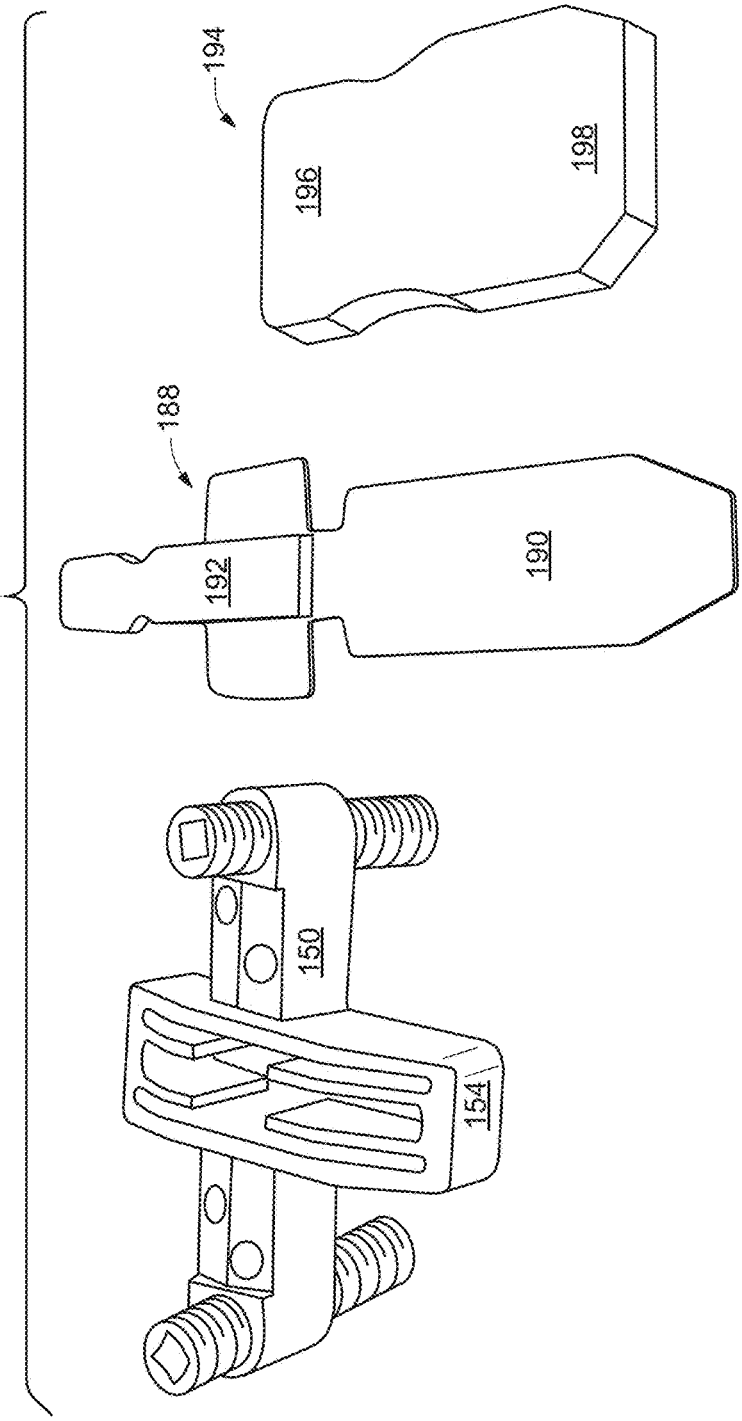

Fig. 6A

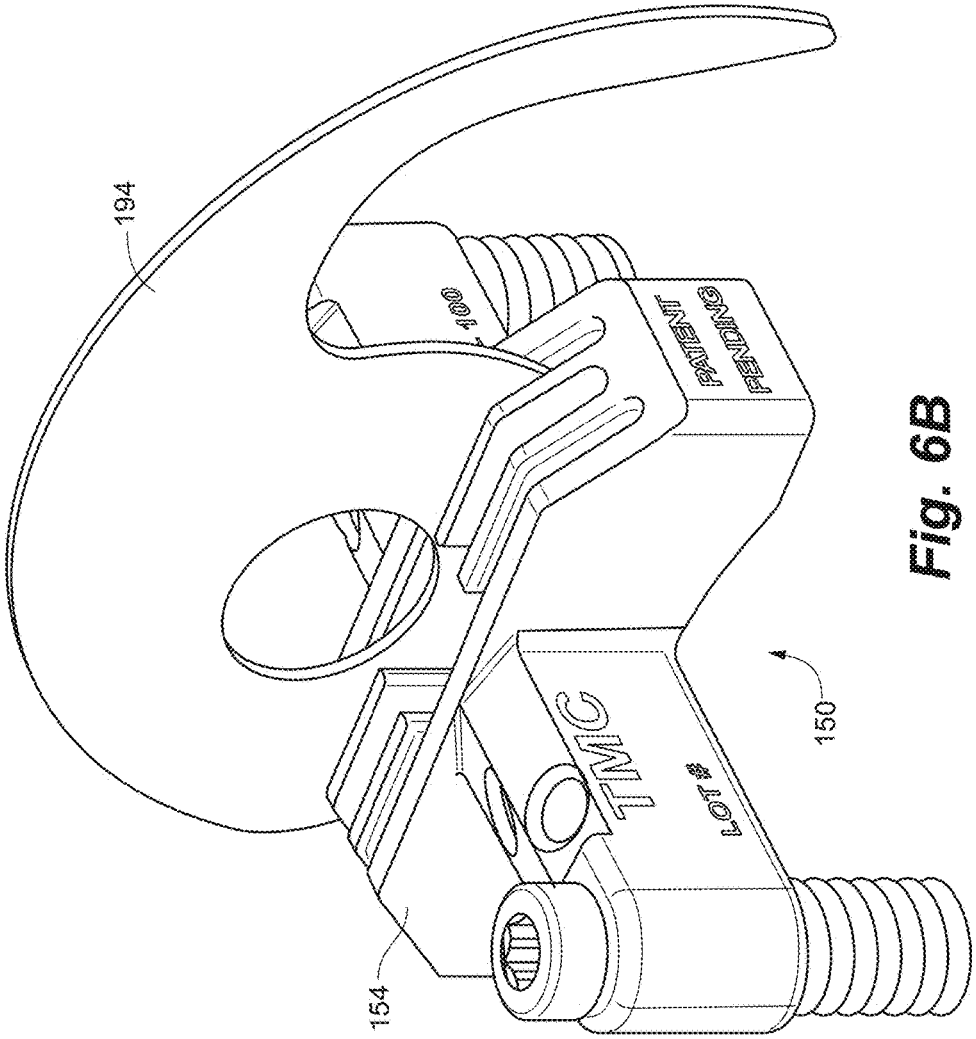

Fig. 6B

Fig. 7

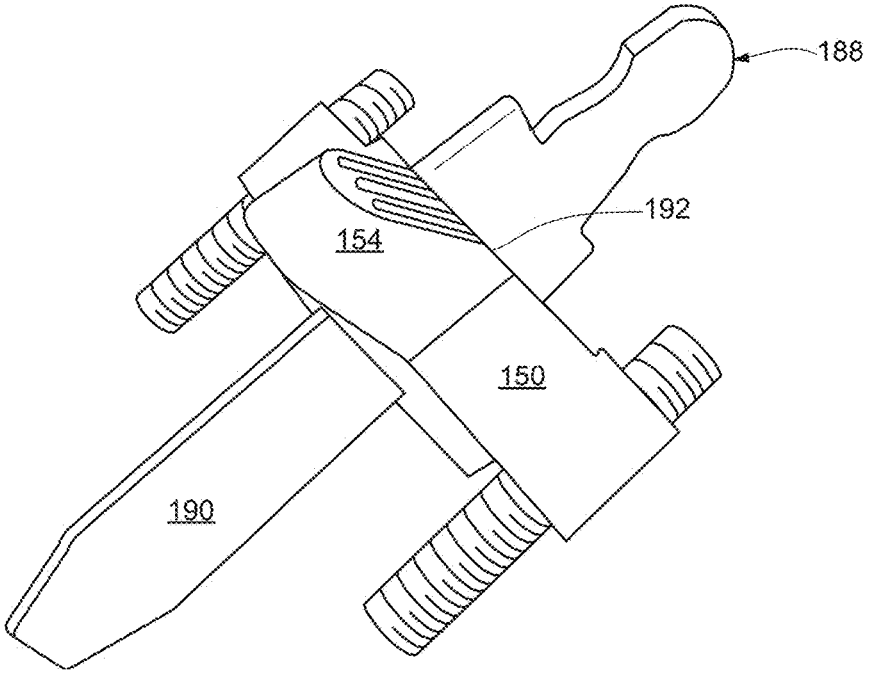

Fig. 8

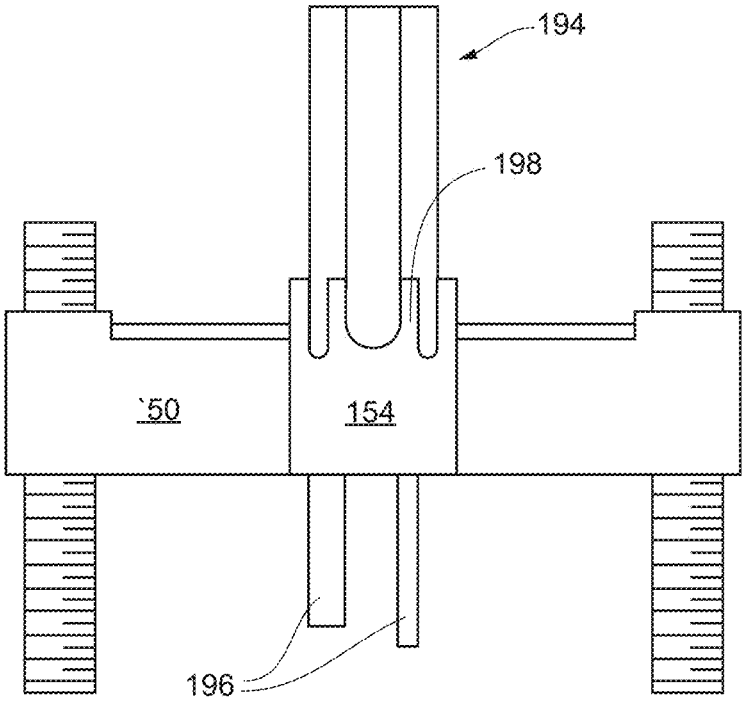

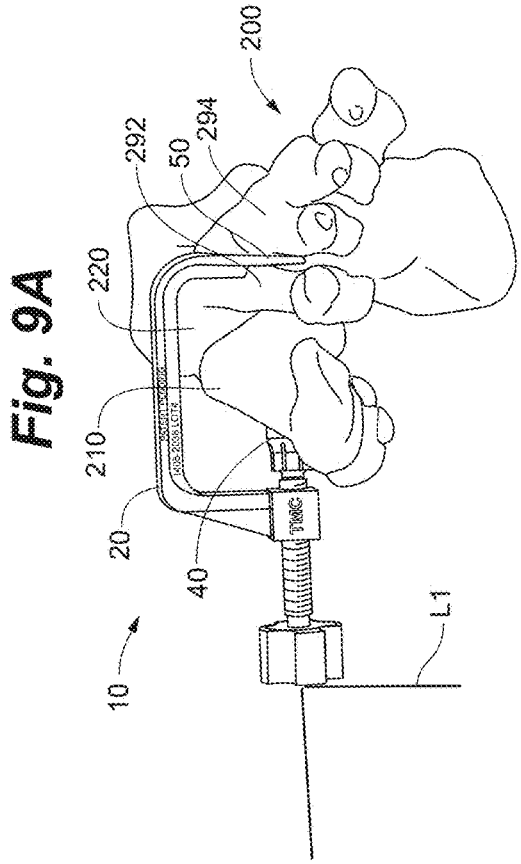
10
20
210
220
292
50
294
200
40
L1

Fig. 9A

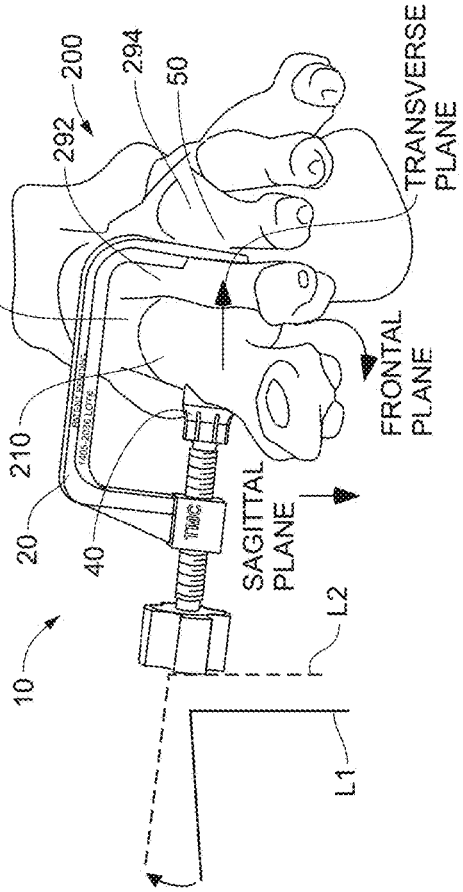
10
20
210
220
292
200
294
50
40
SAGITTAL PLANE
FRONTAL PLANE
TRANSVERSE PLANE
L1
L2

Fig. 9B

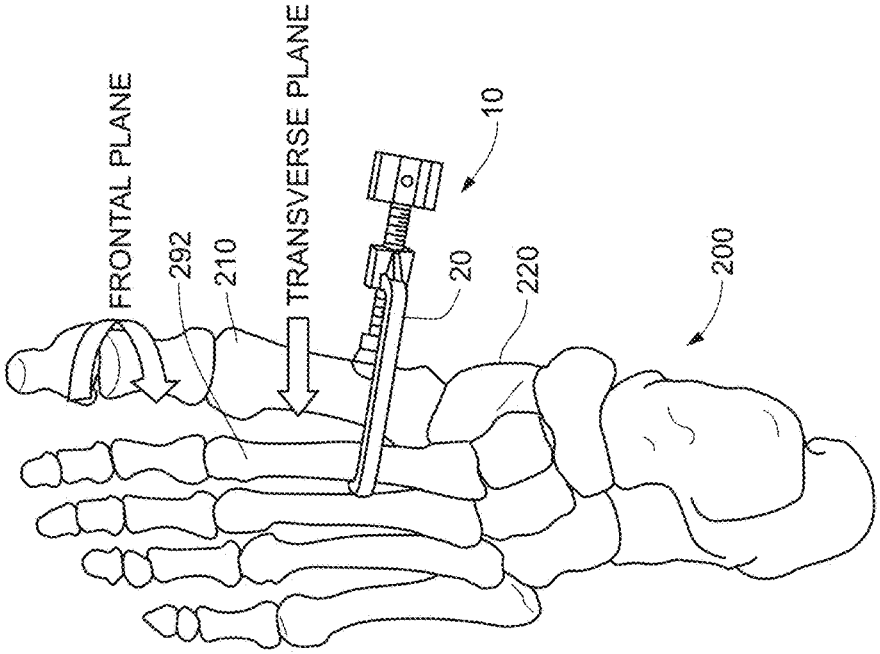

Fig. 10B

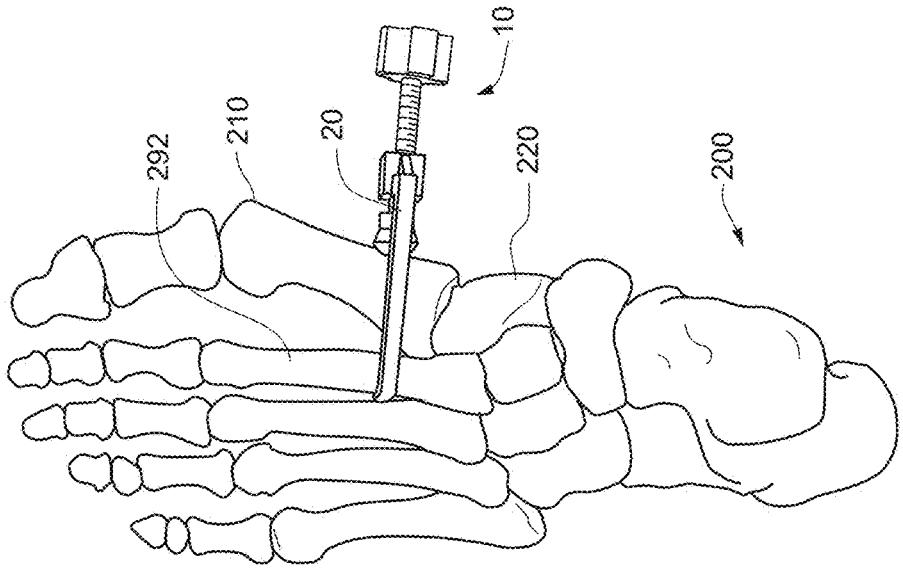

Fig. 10A

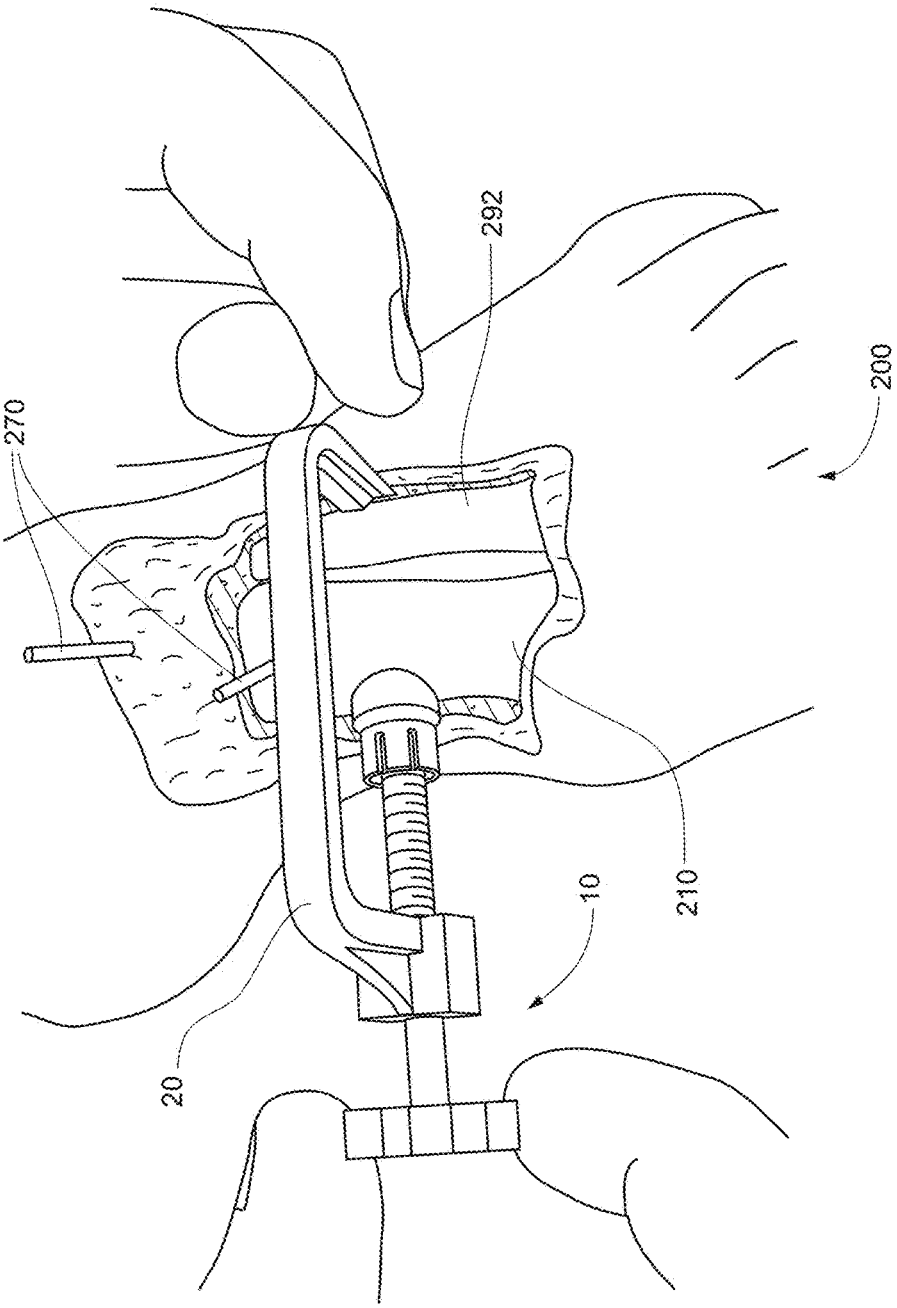

Fig. 11a

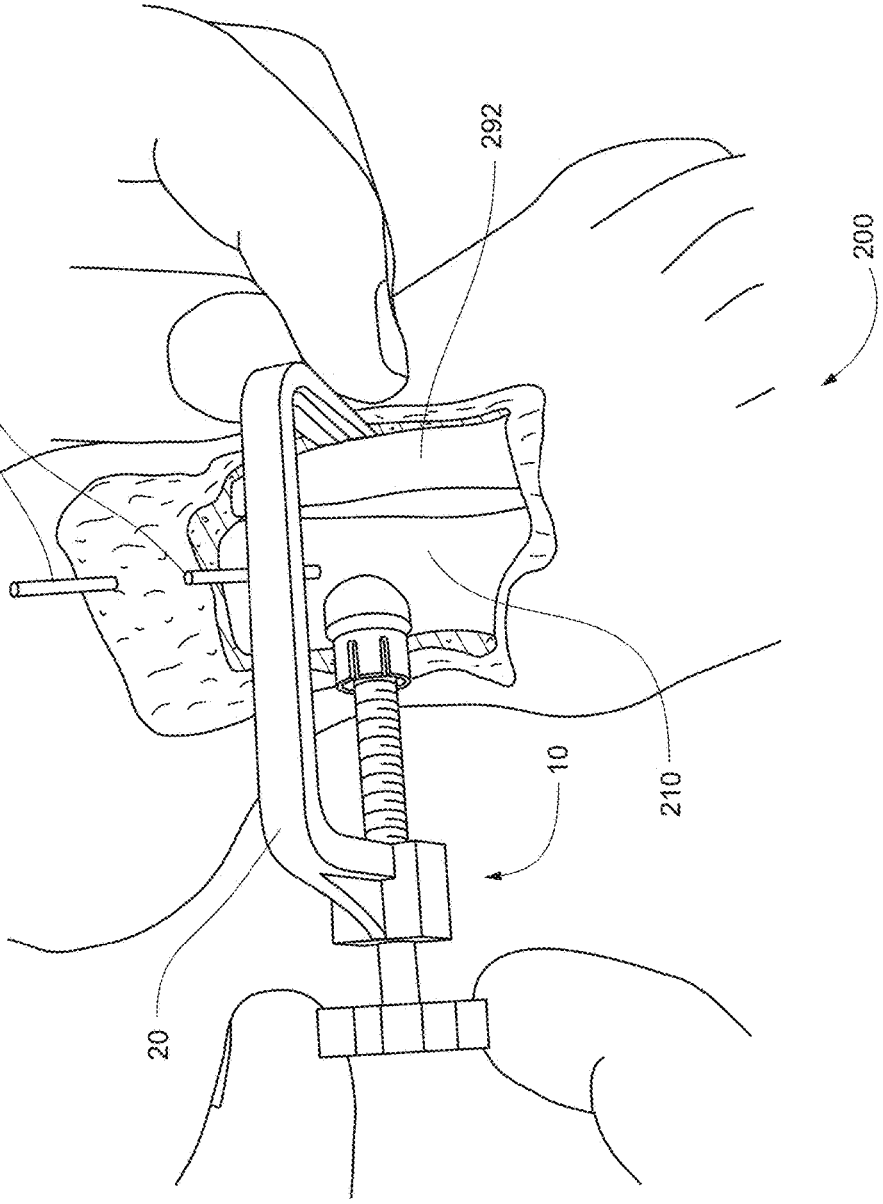

Fig. 11b

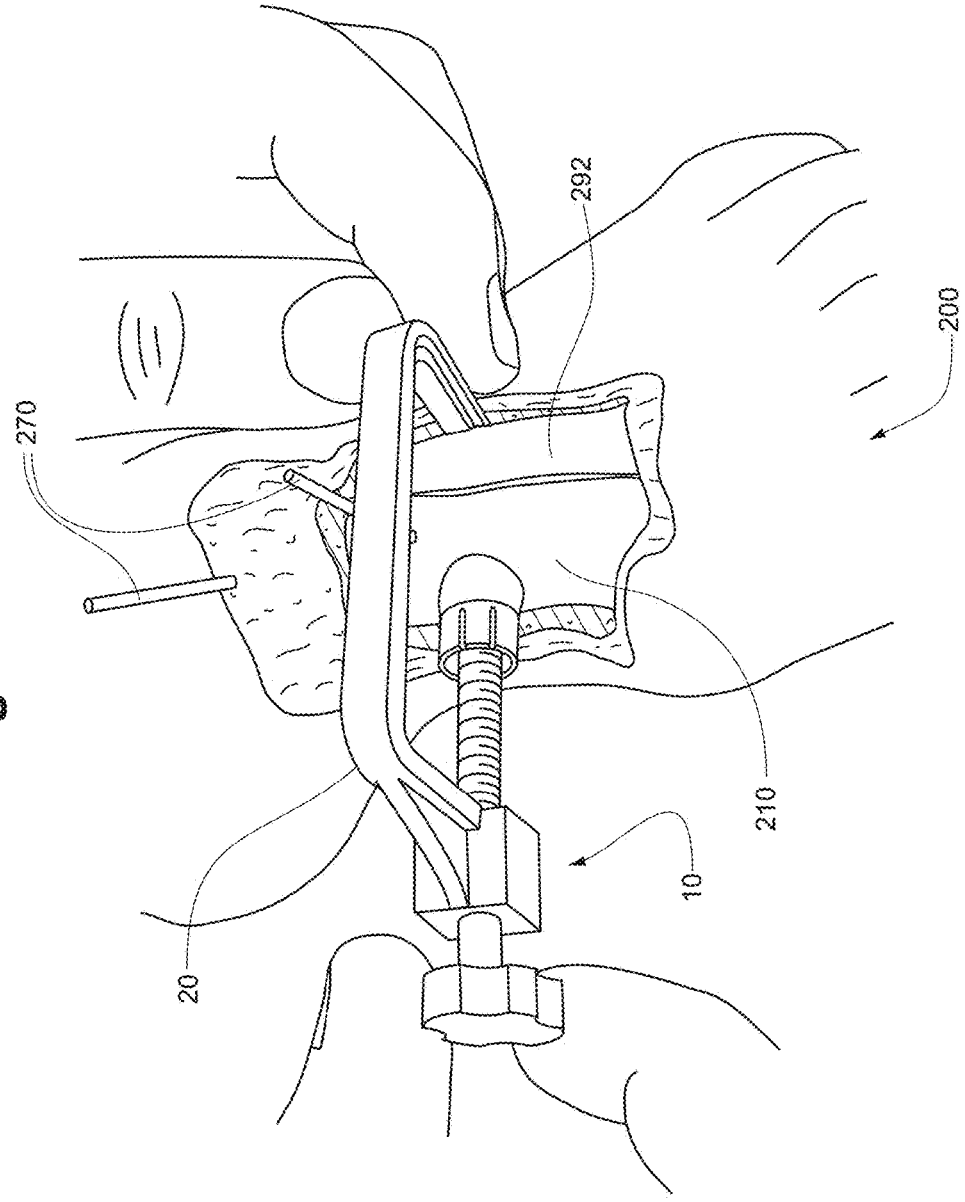

Fig. 11c

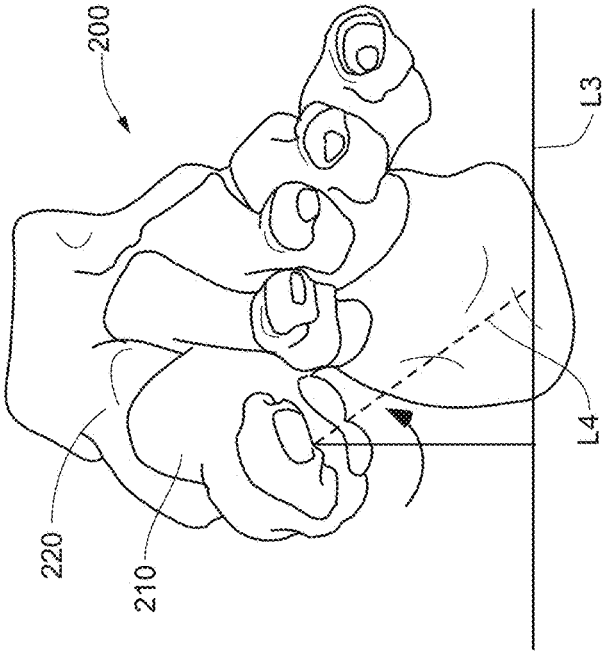

Fig. 12B

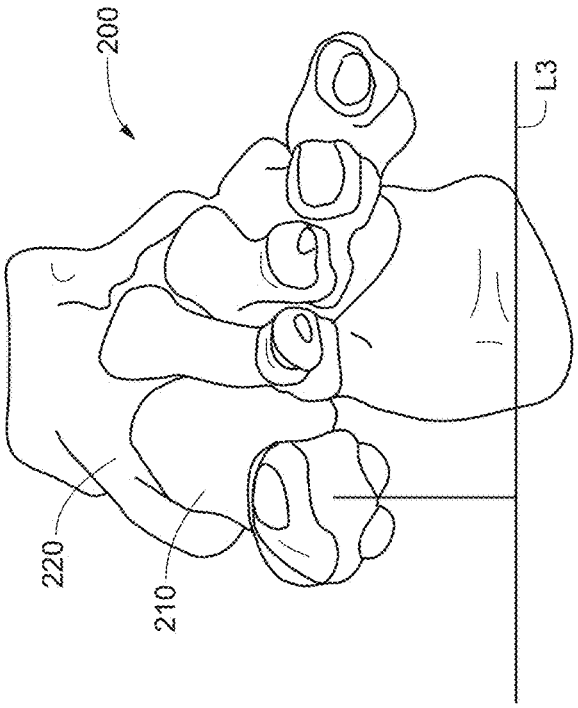

Fig. 12A

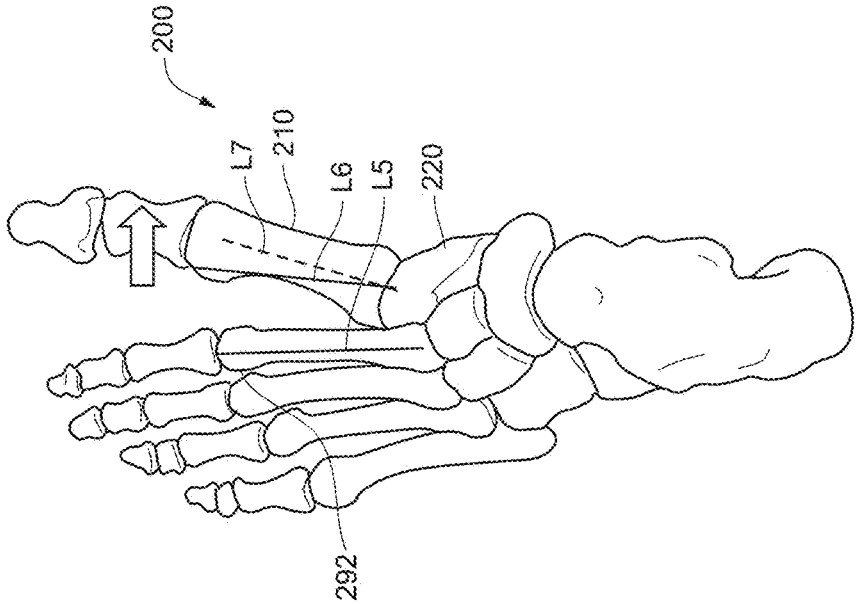

Fig. 13B

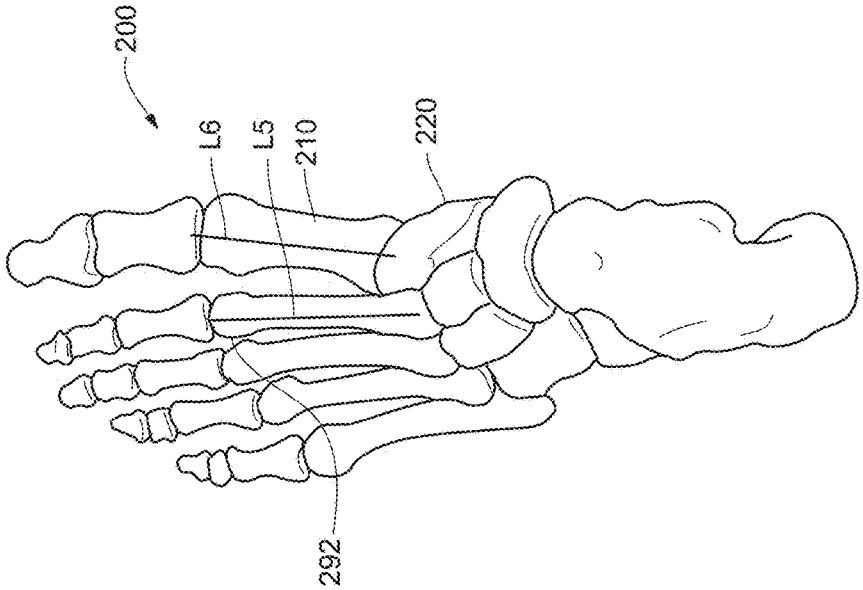

Fig. 13A

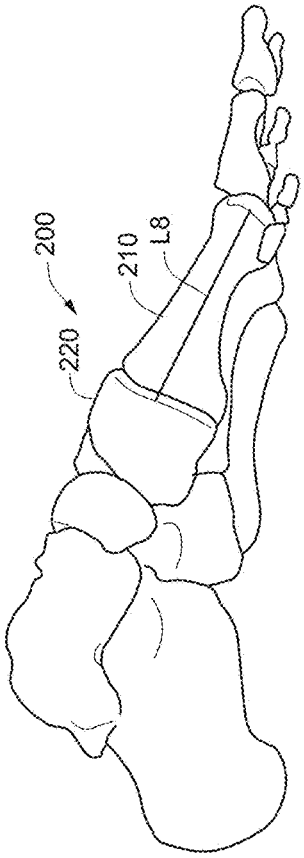

Fig. 14A

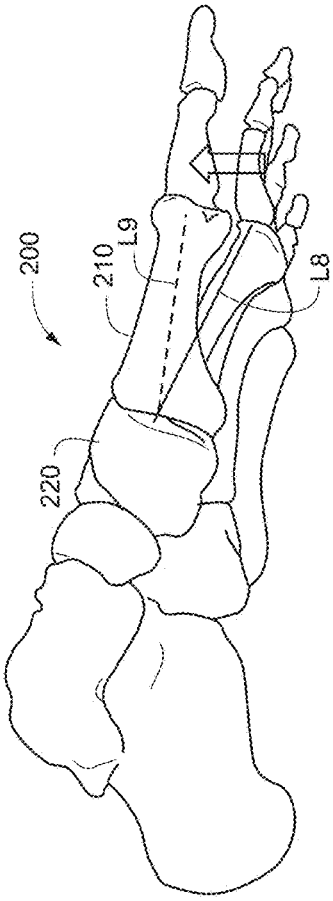

Fig. 14B

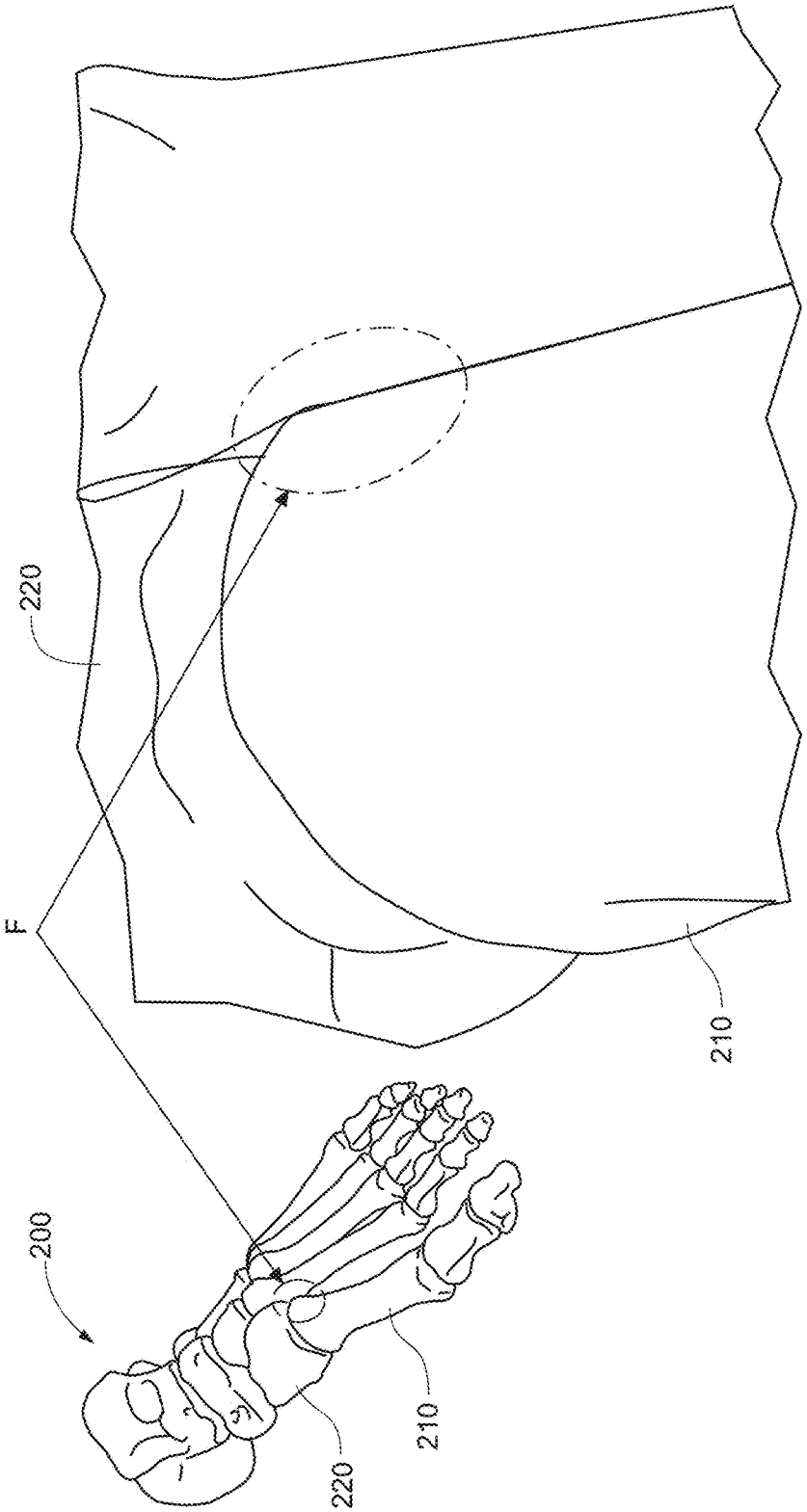

Fig. 15A

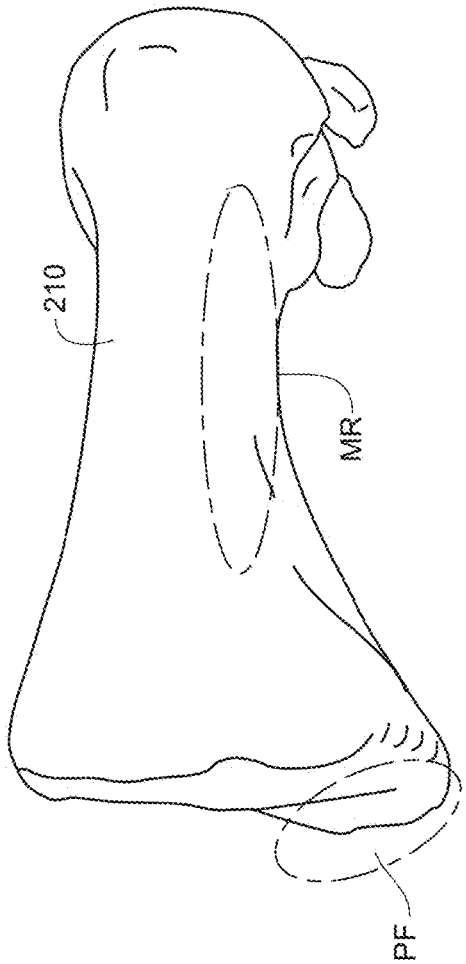

Fig. 15B

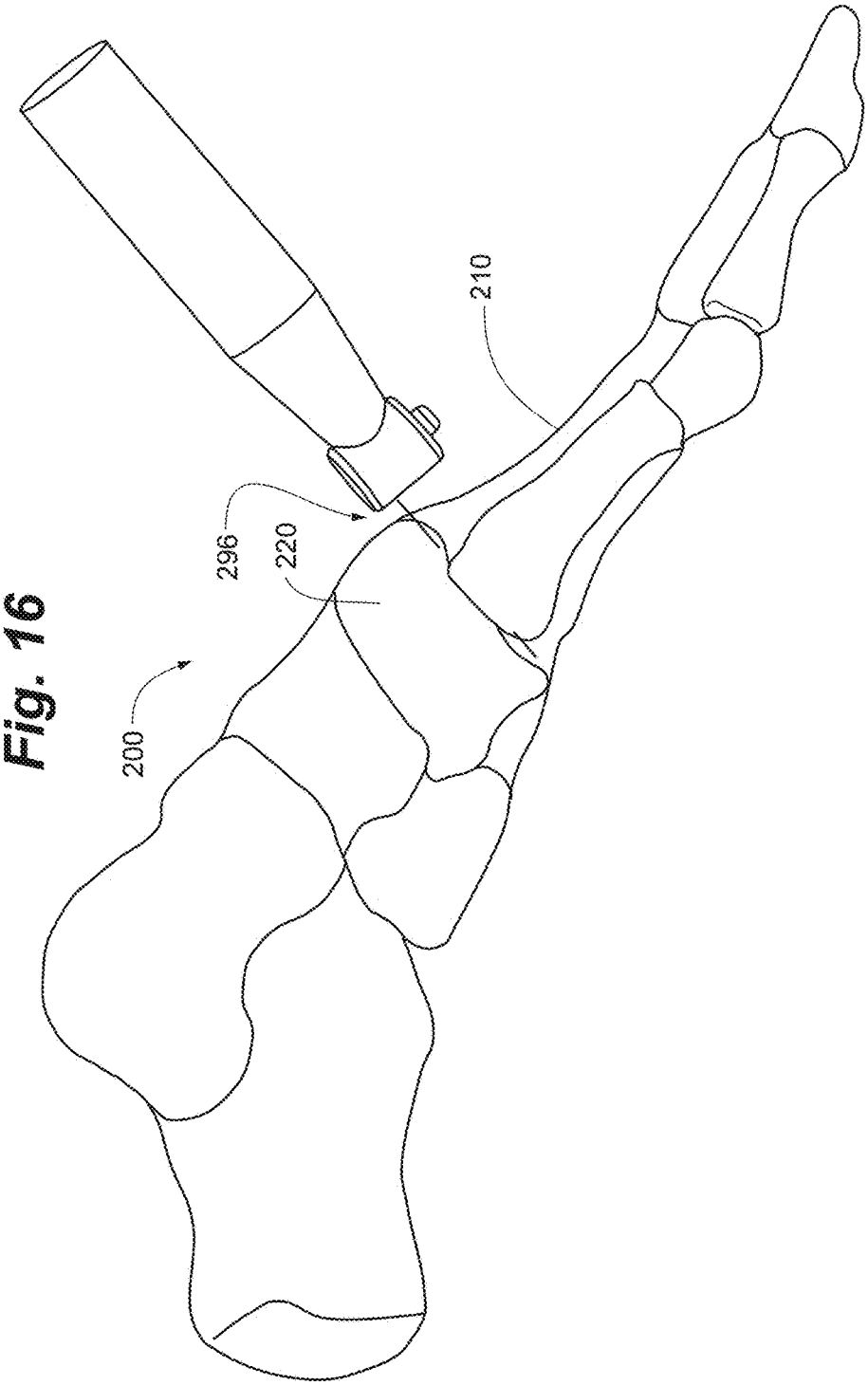

Fig. 16

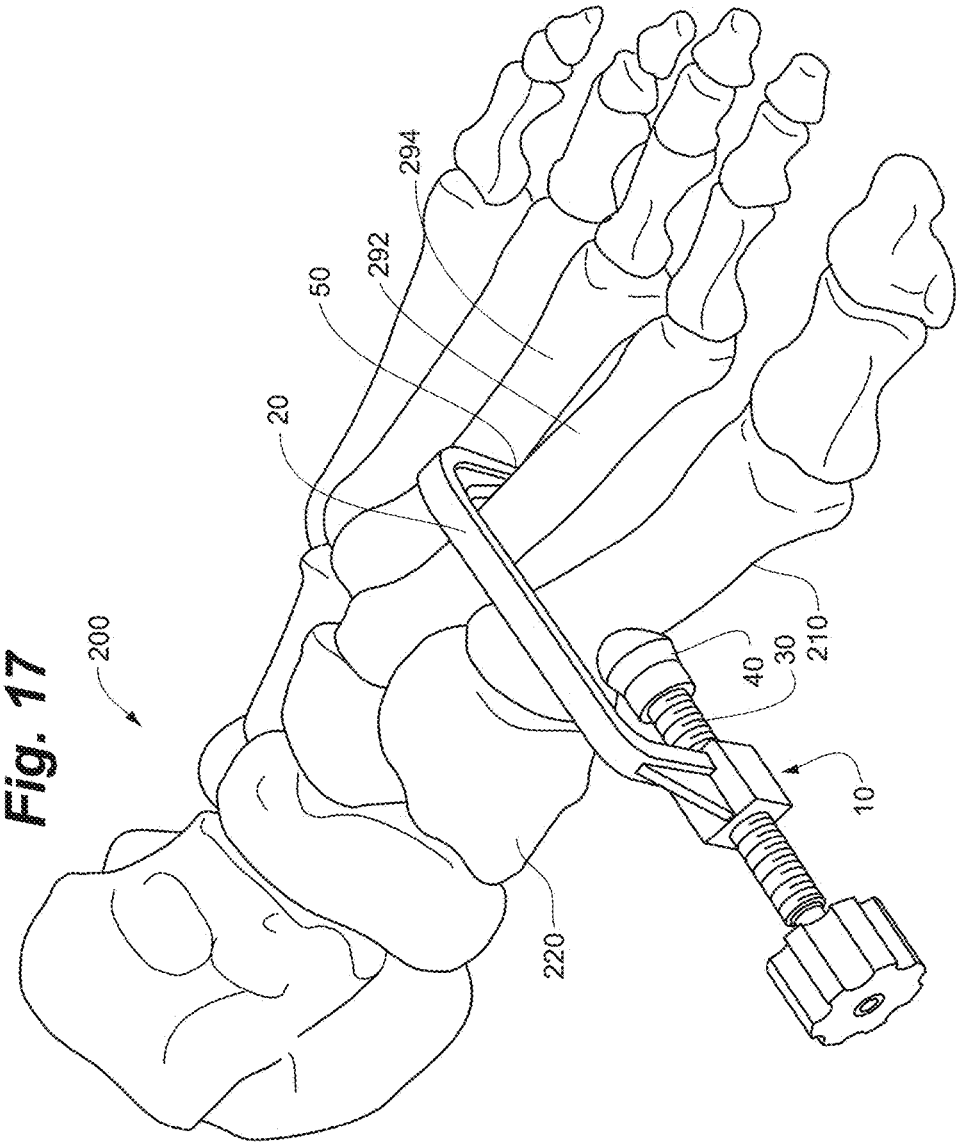

Fig. 17

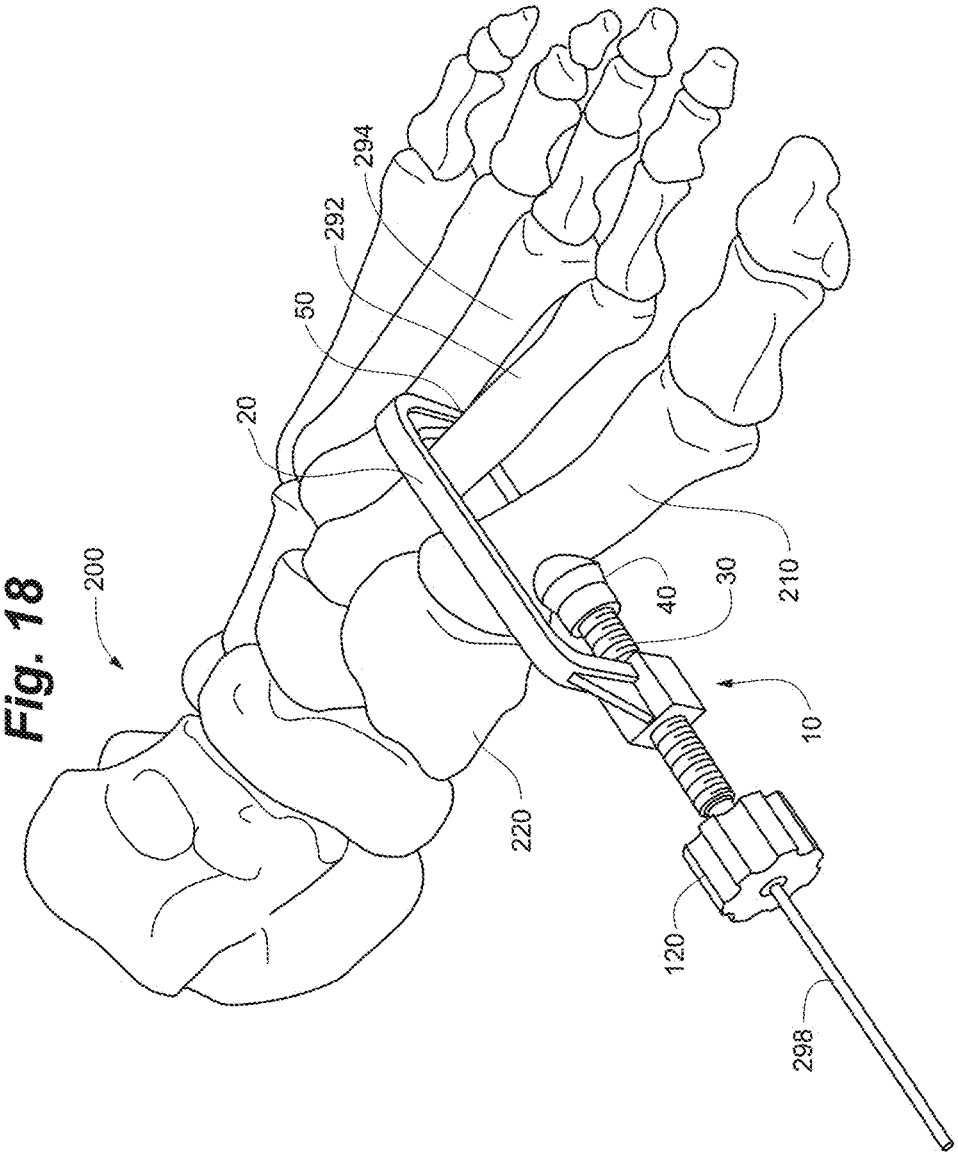

Fig. 18

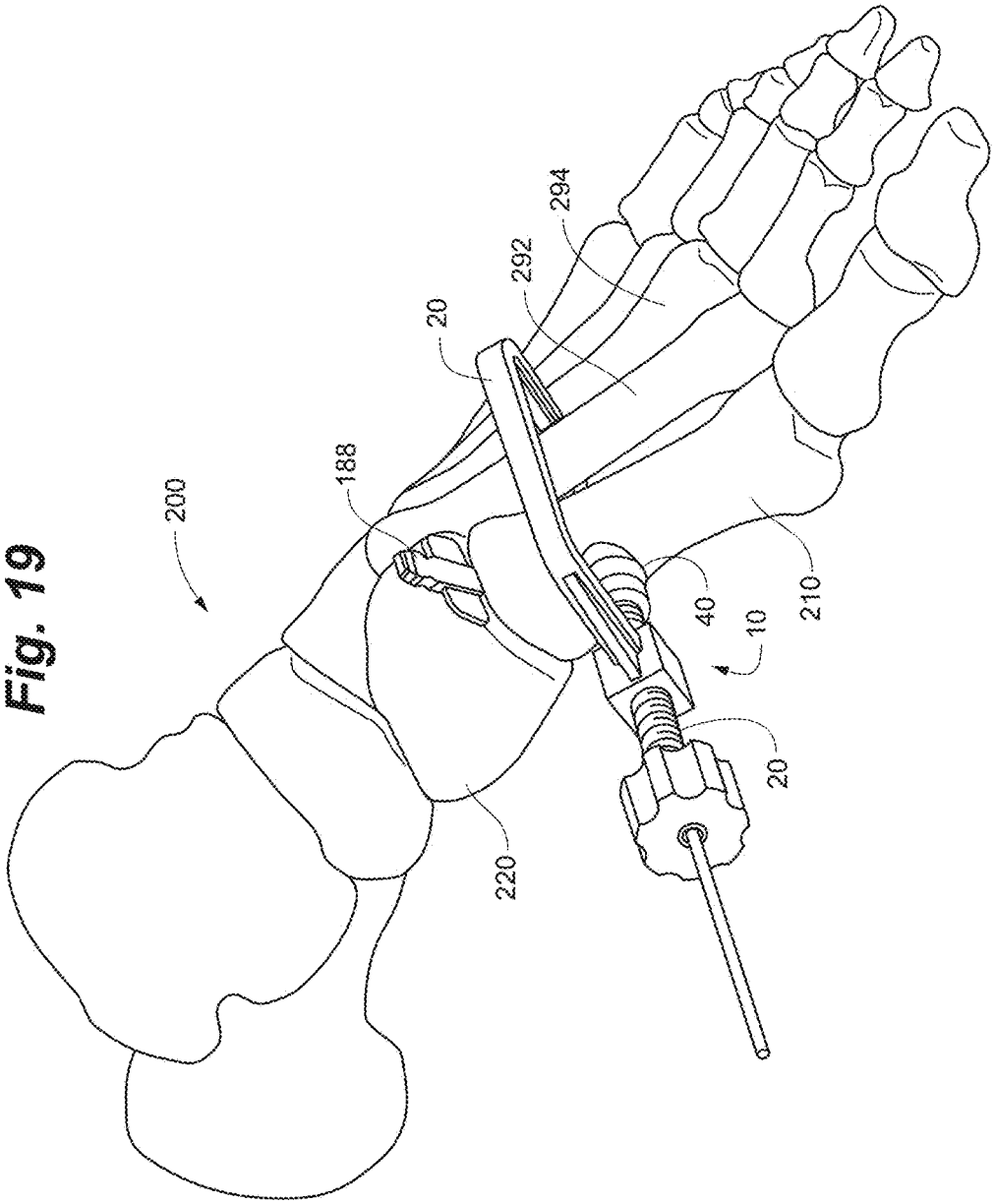

Fig. 19

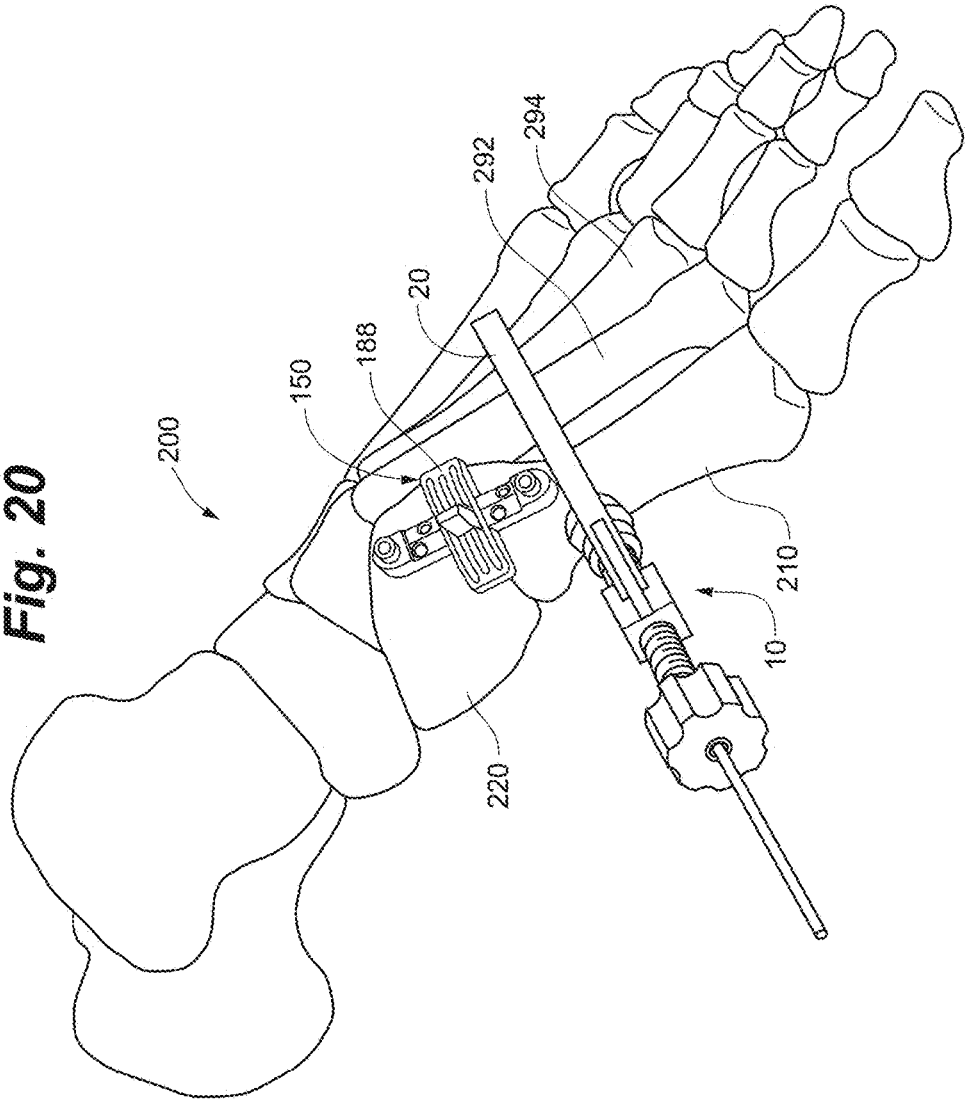

Fig. 20

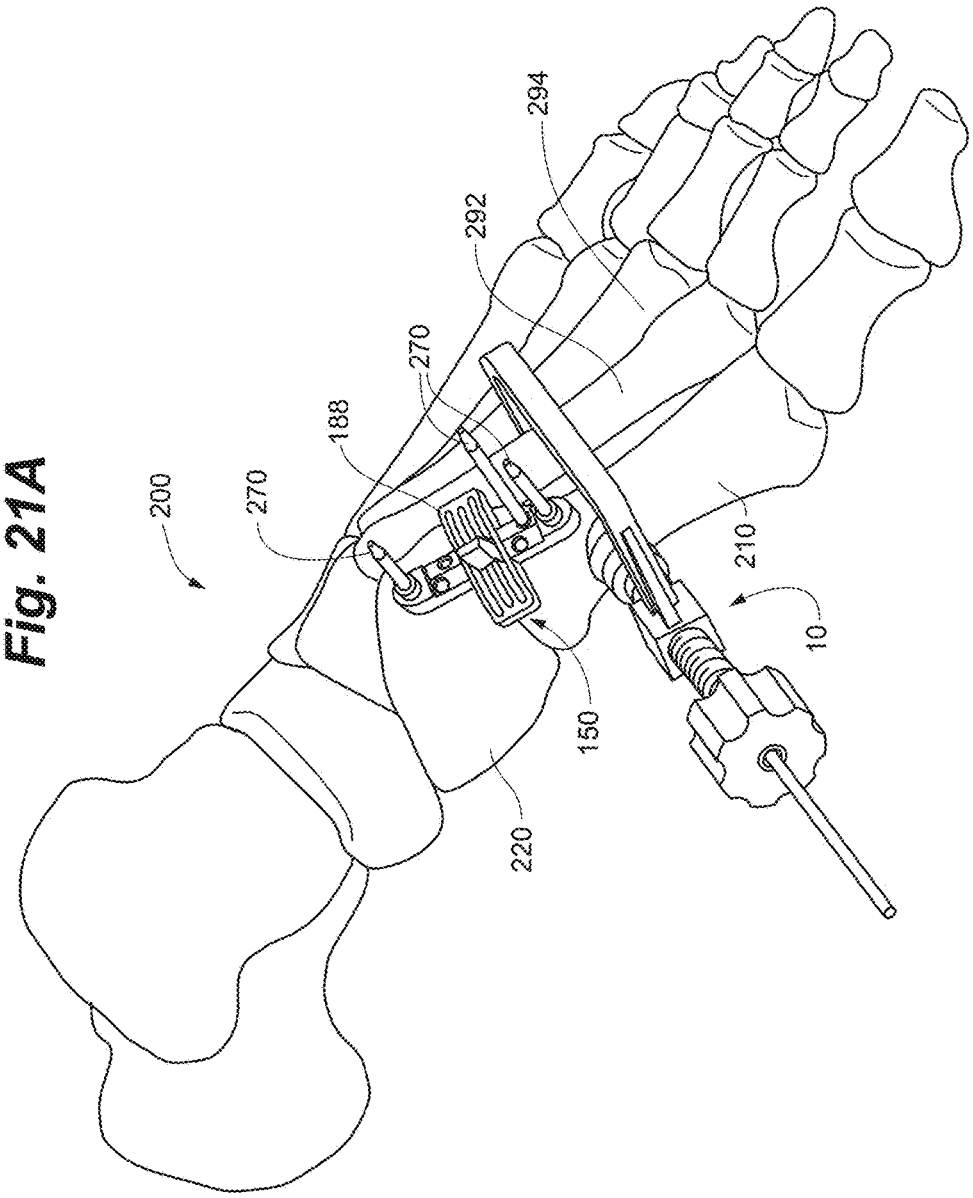

Fig. 21A

Fig. 21B

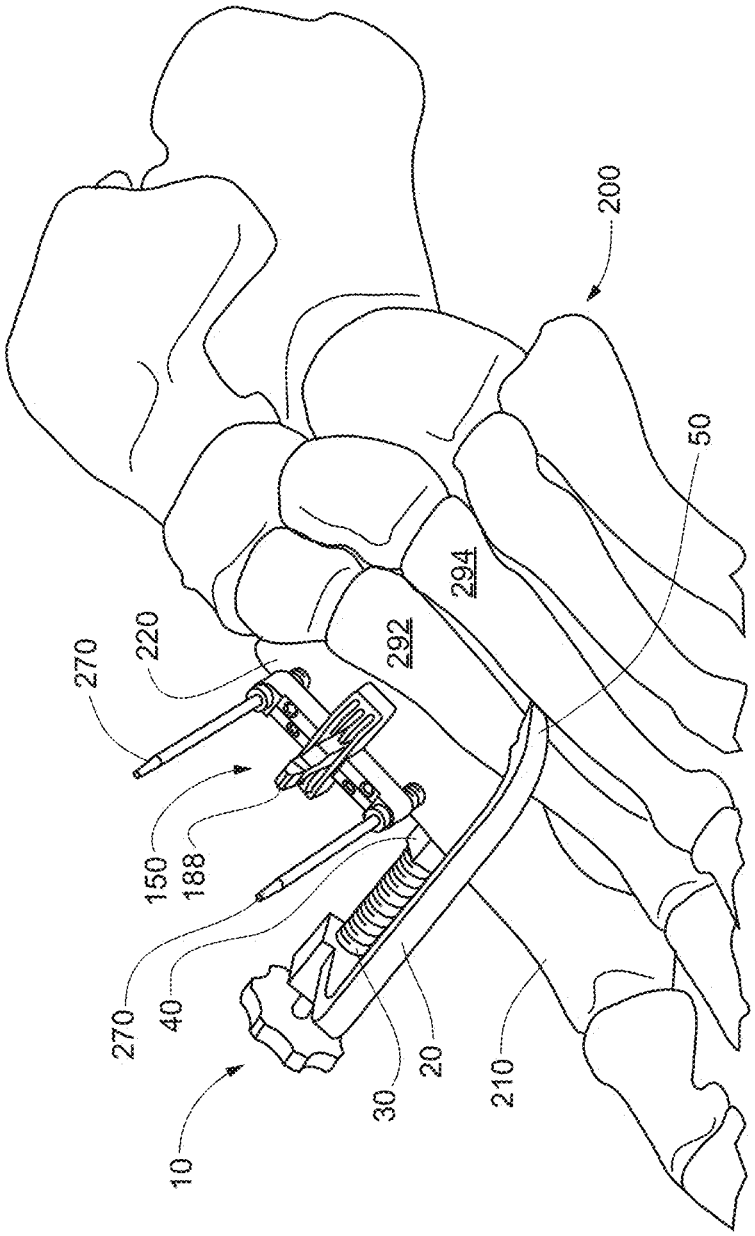

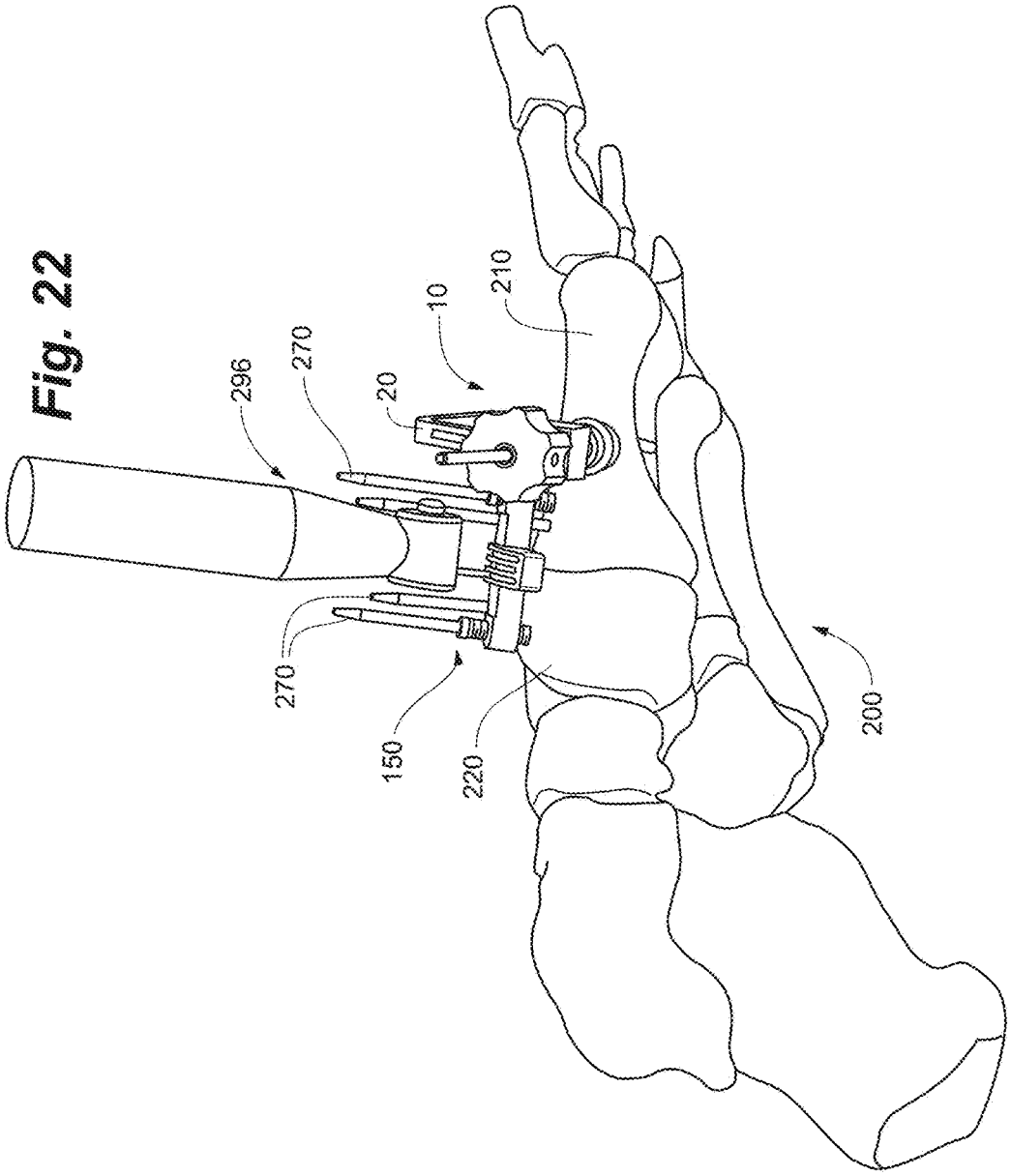

Fig. 22

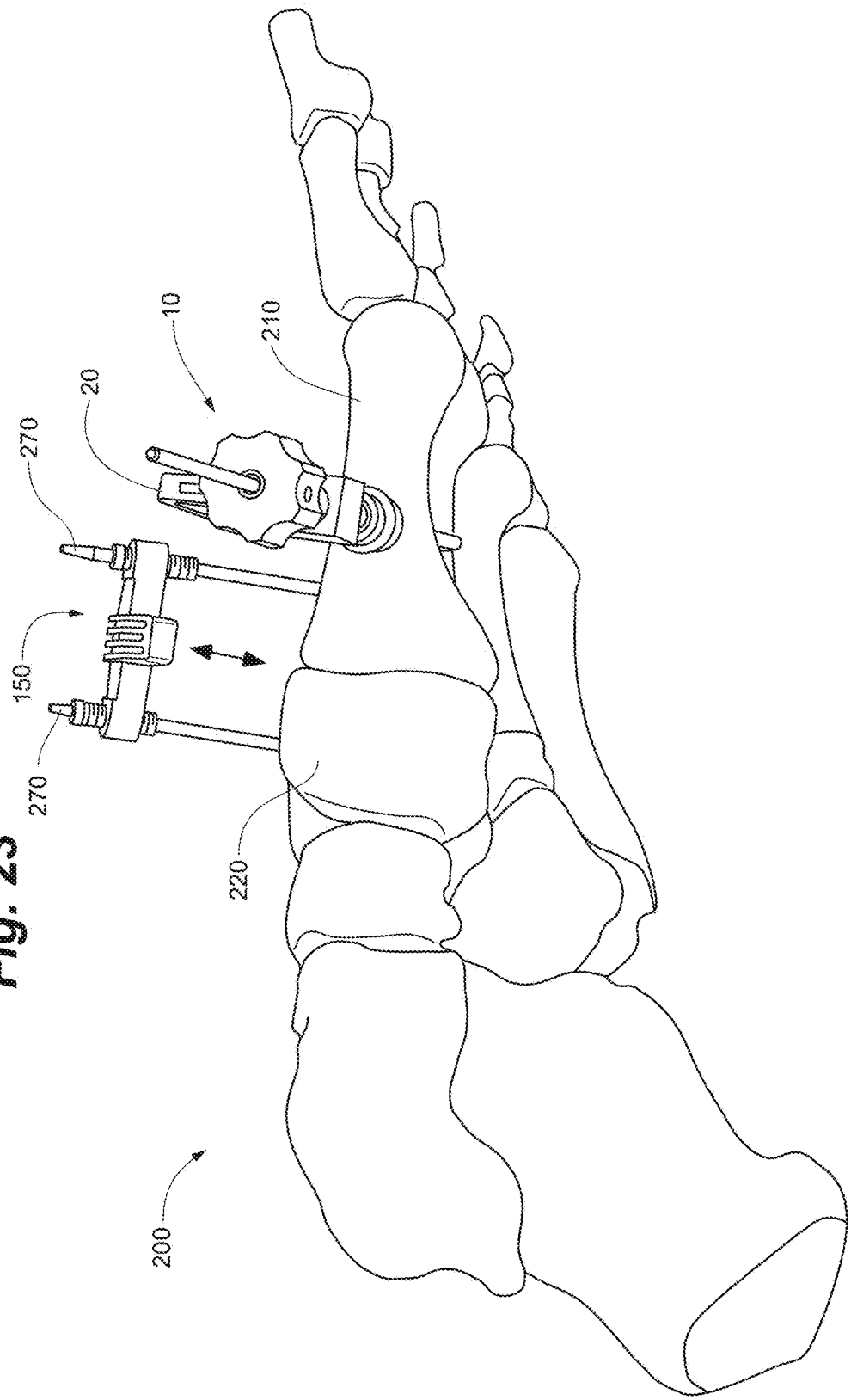

Fig. 23

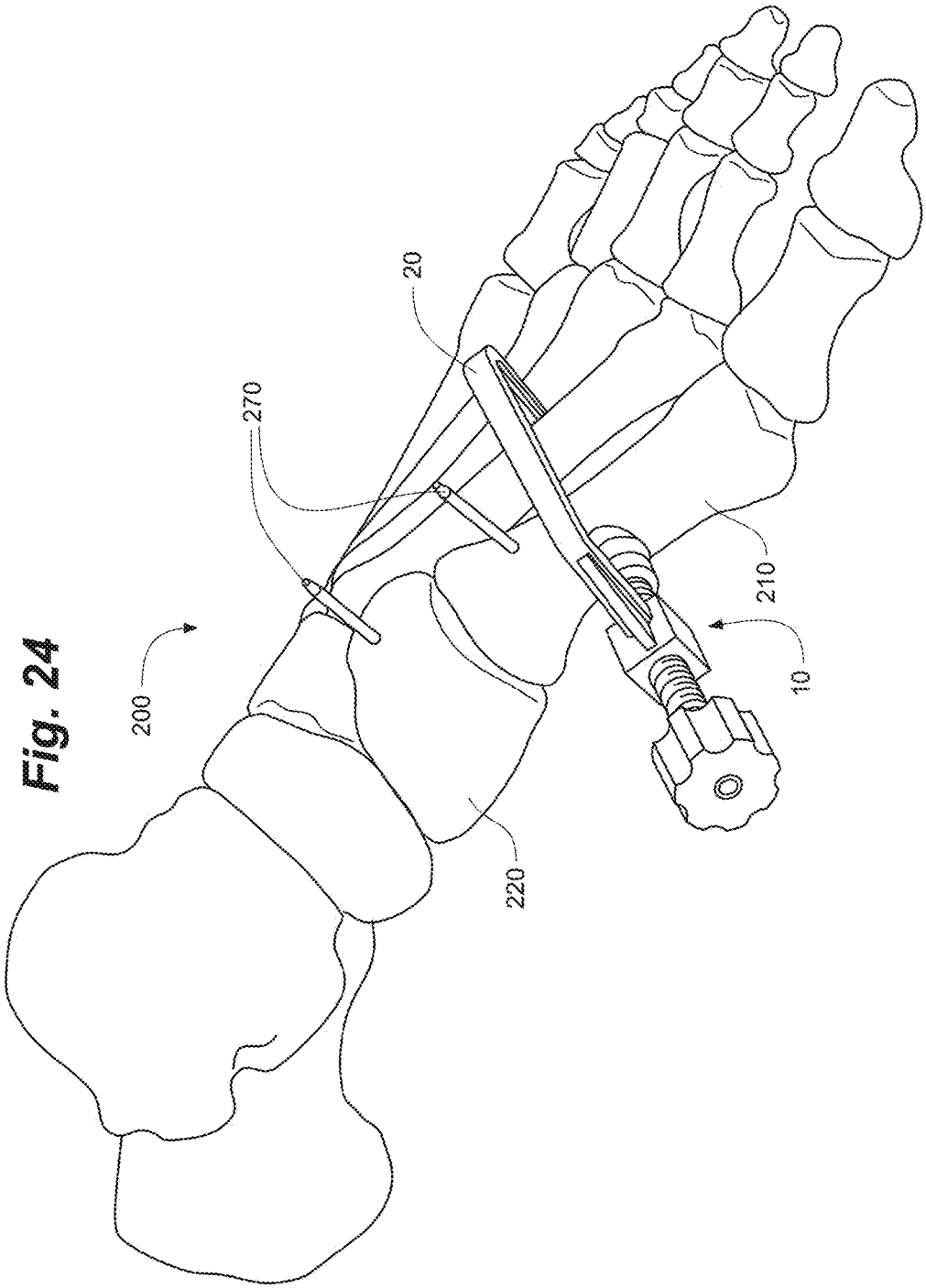

Fig. 24

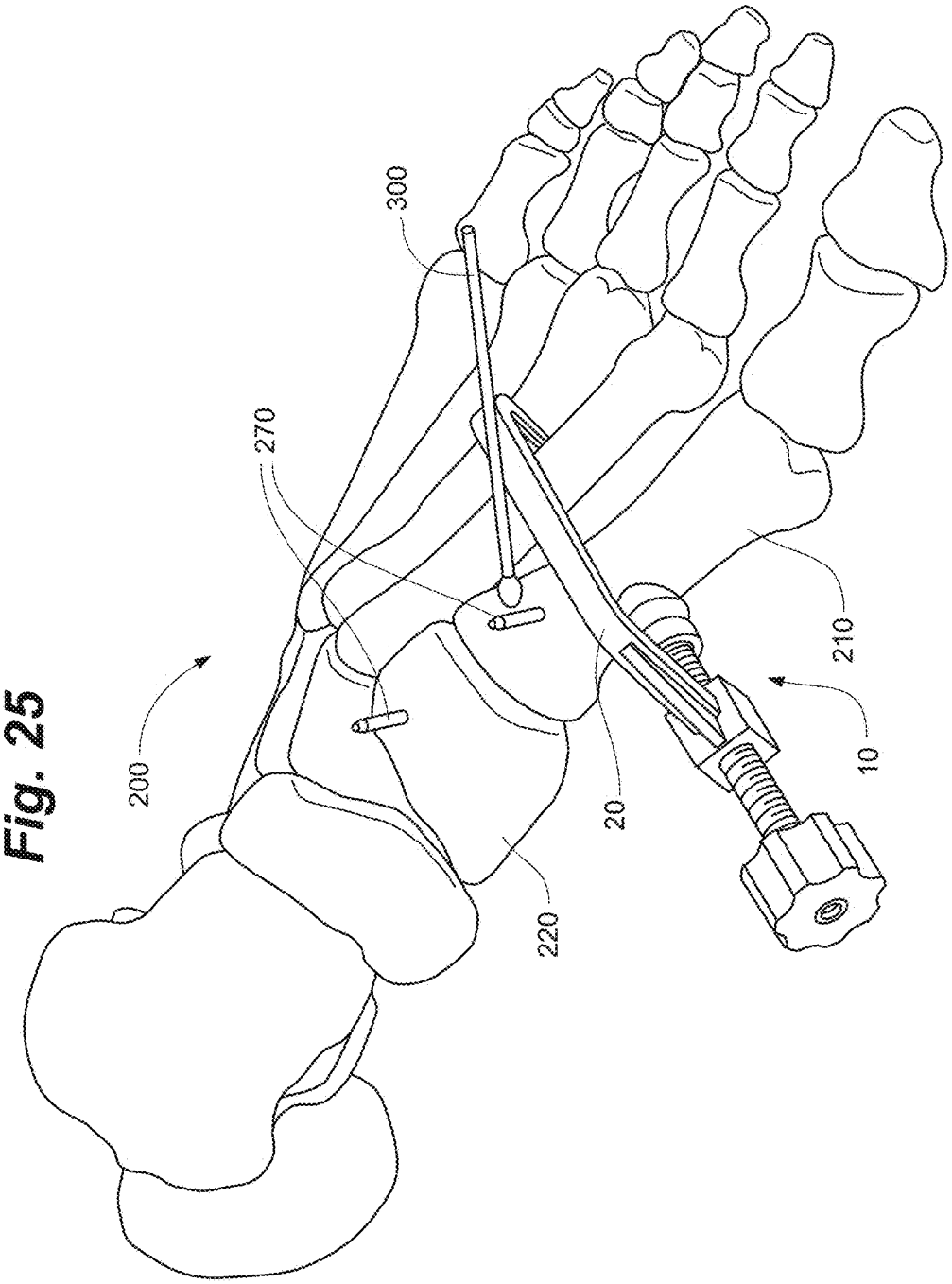

Fig. 25

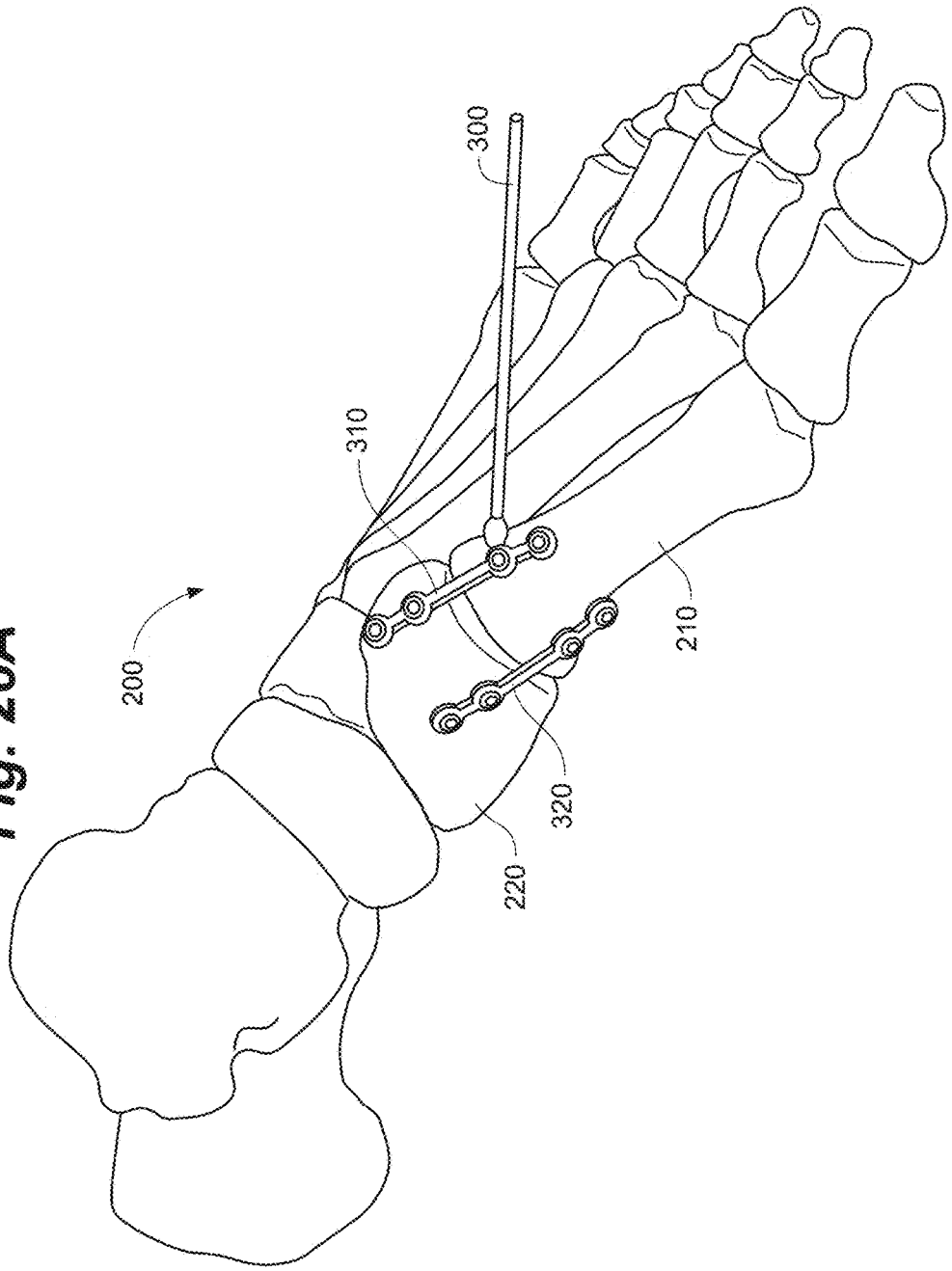

Fig. 26A

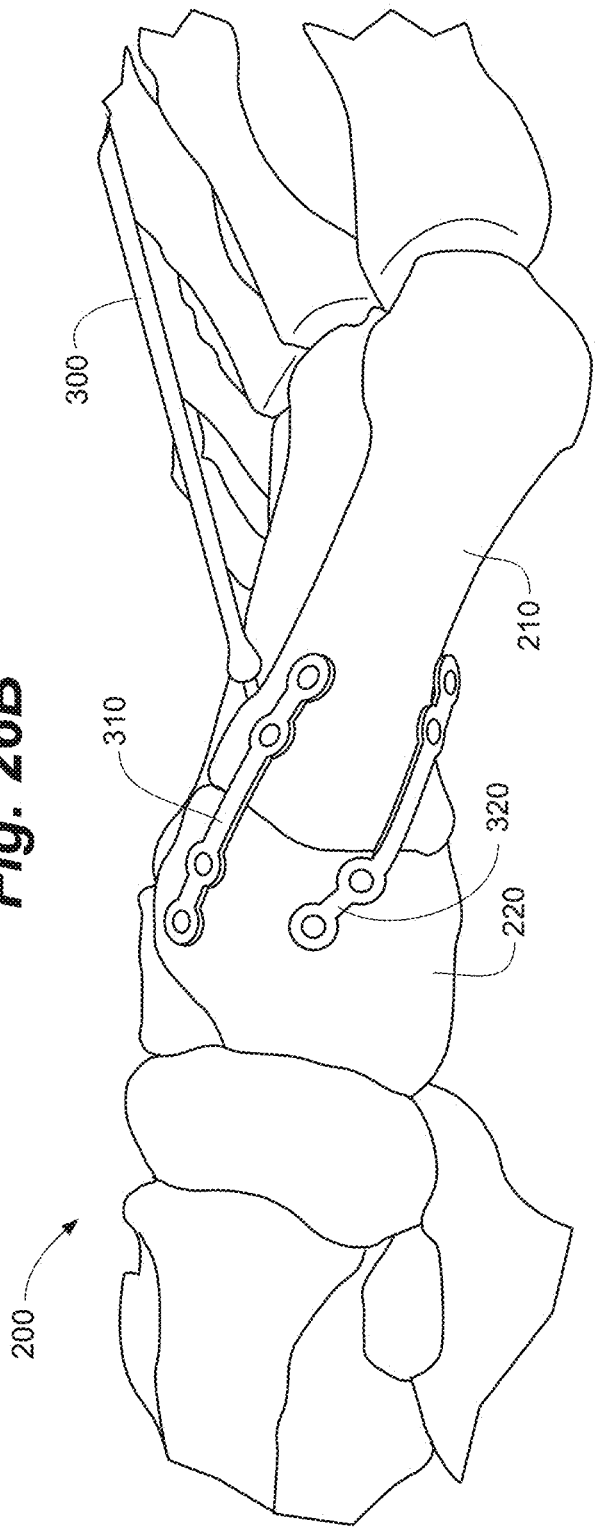

Fig. 26B

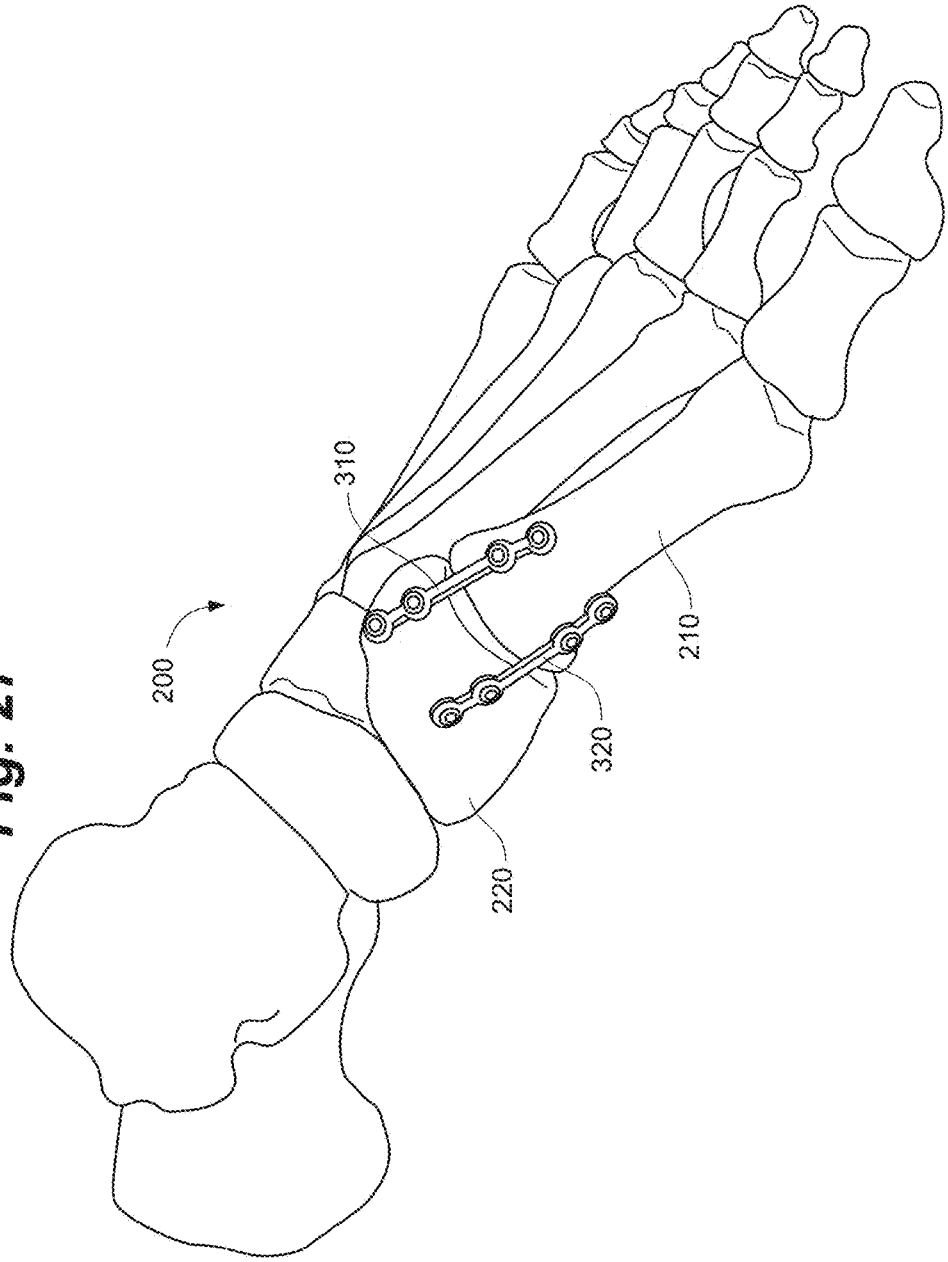

Fig. 27

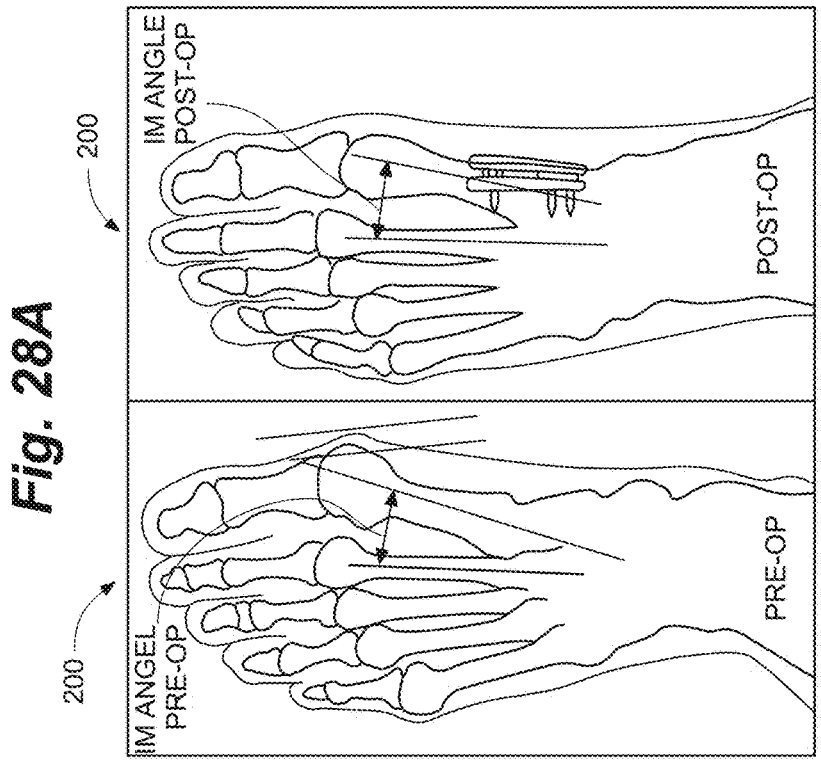

Fig. 28A

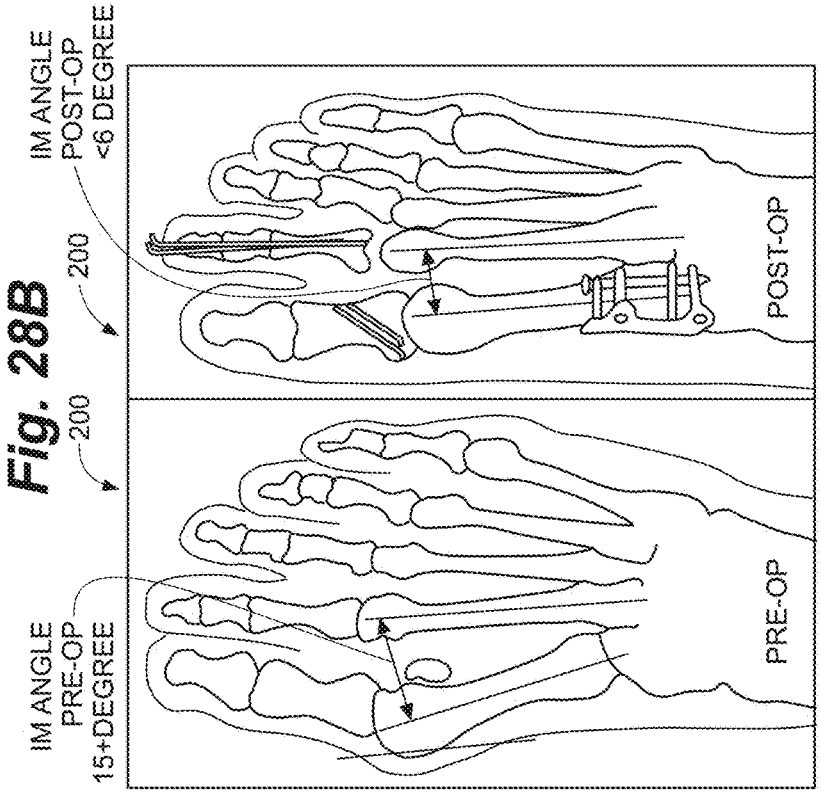

Fig. 28B

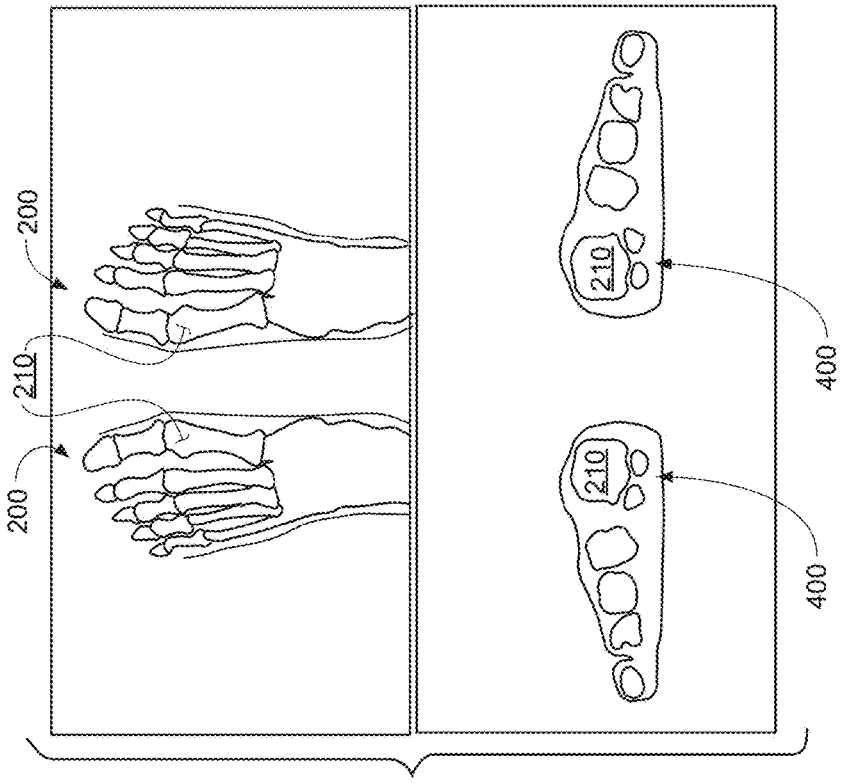

Fig. 29B

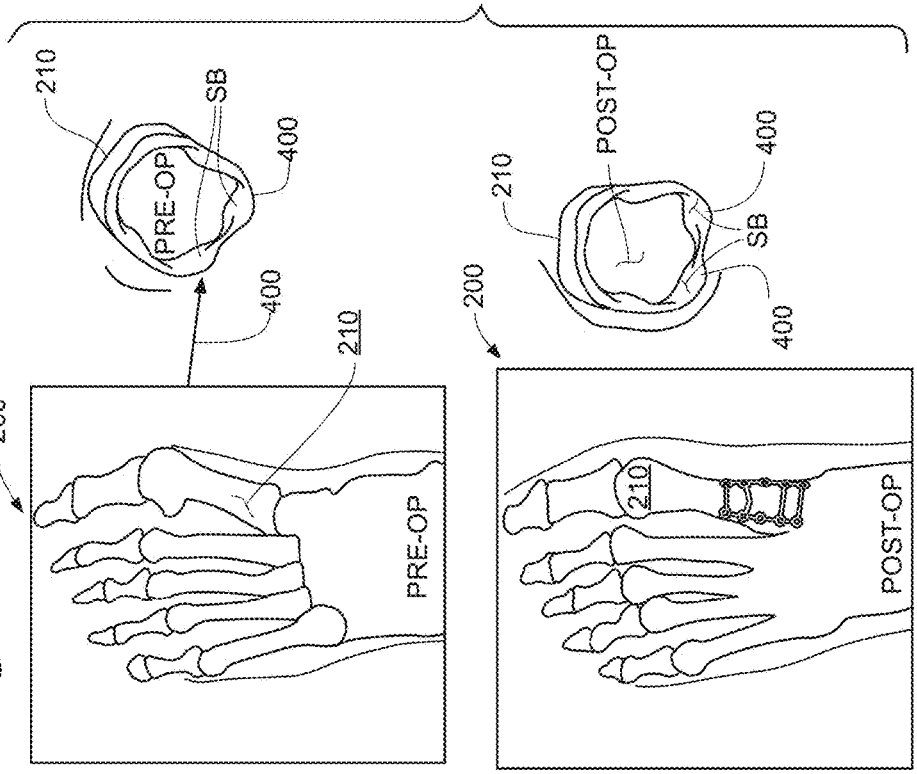

Fig. 29A

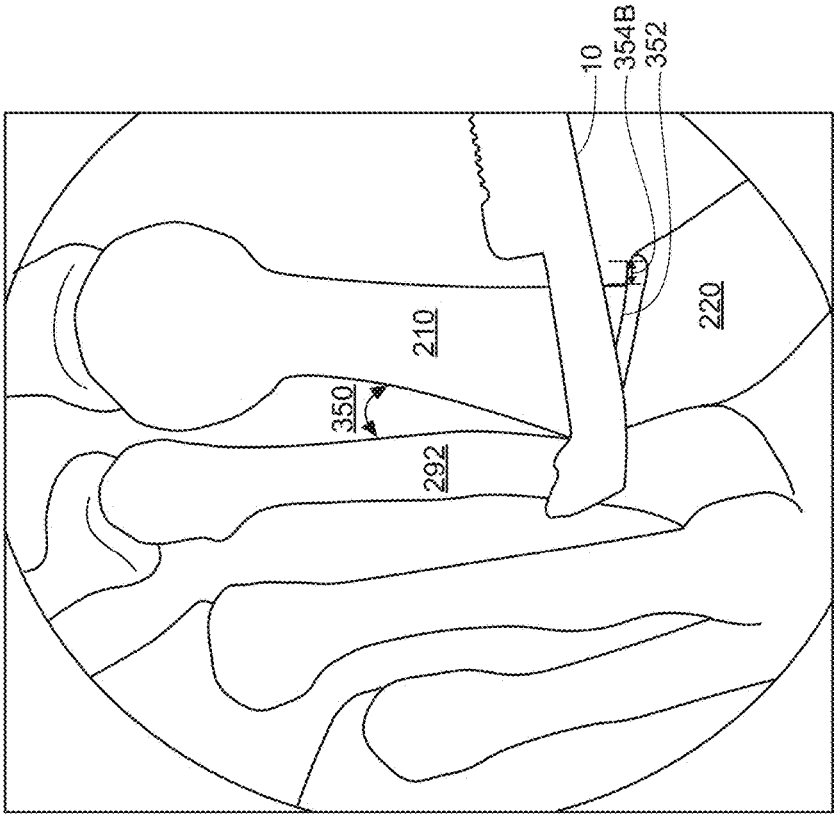

Fig. 30B

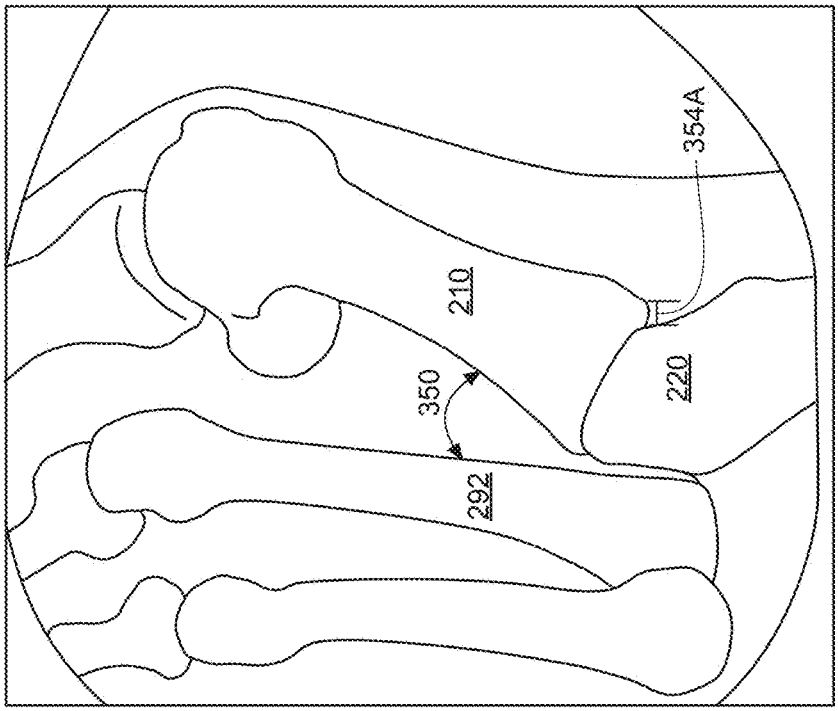

Fig. 30A

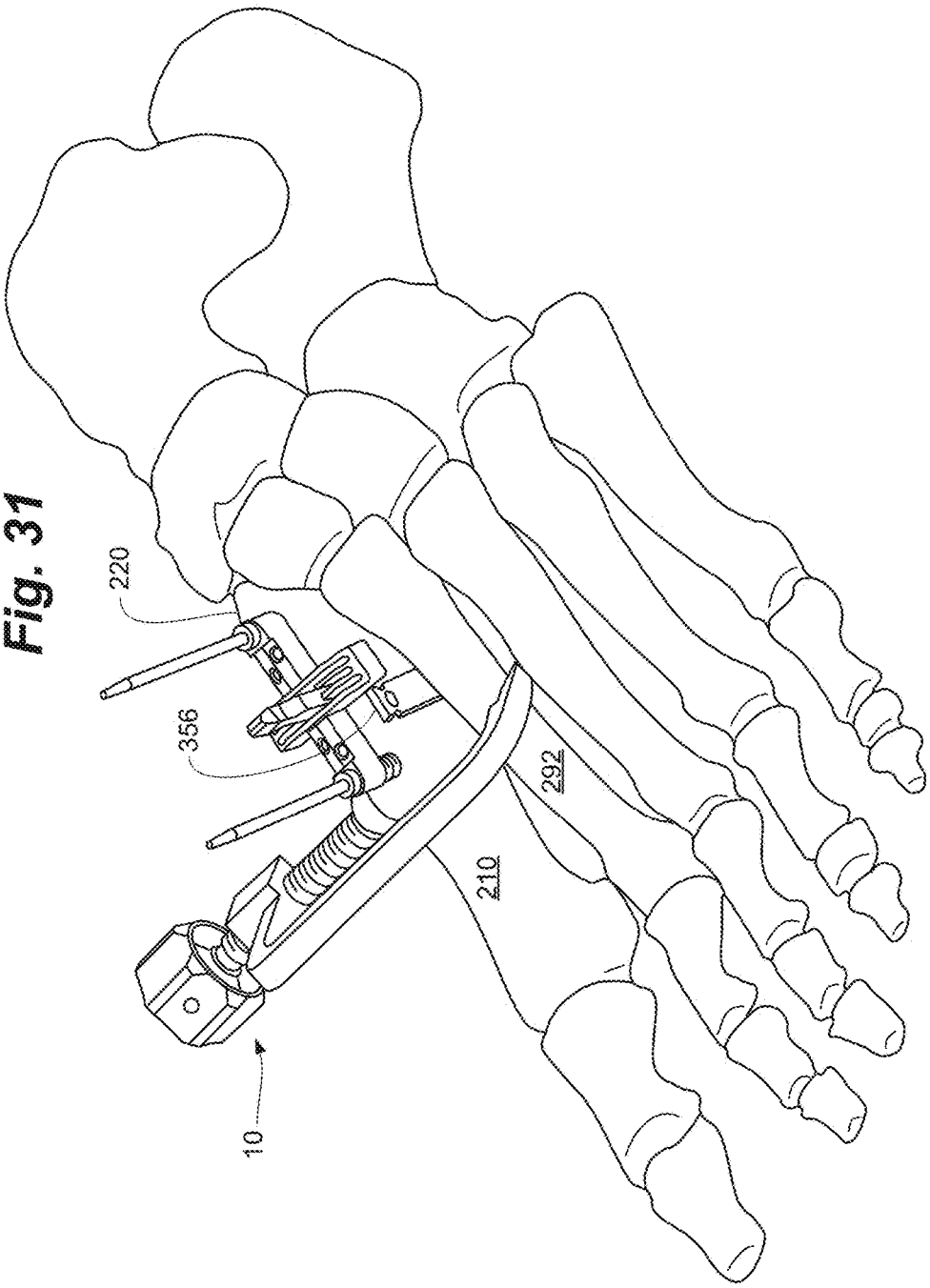

Fig. 31

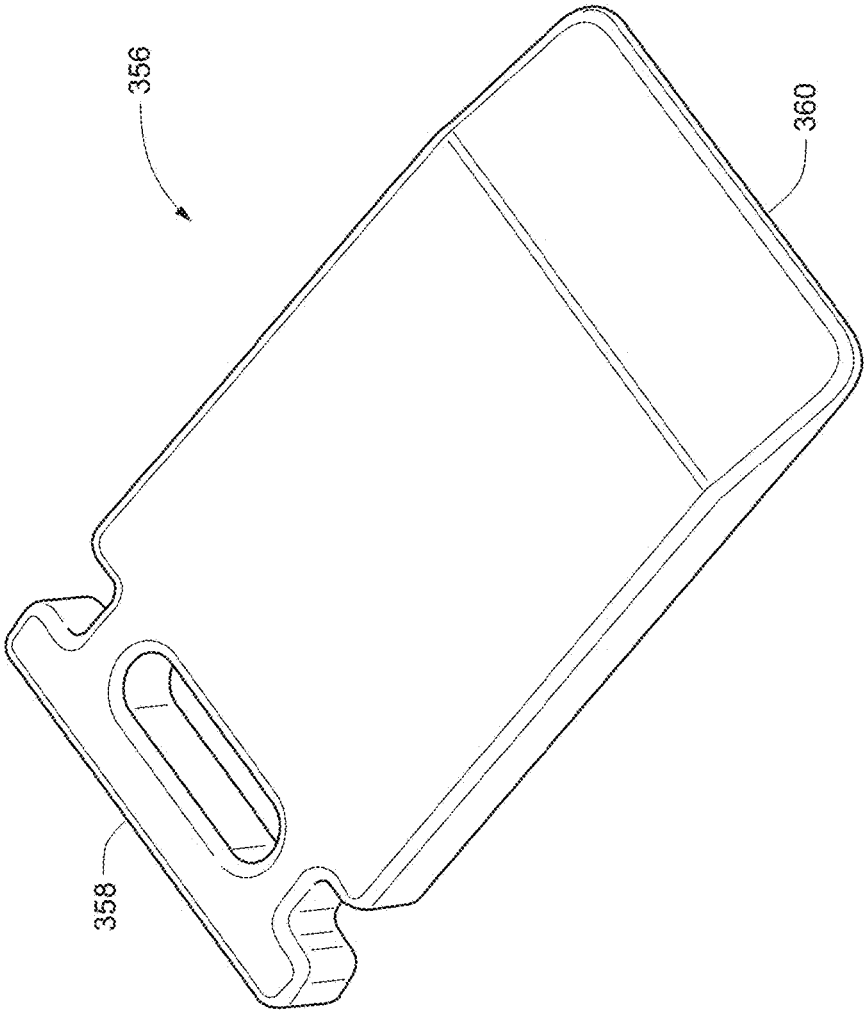

Fig. 32

Fig. 33

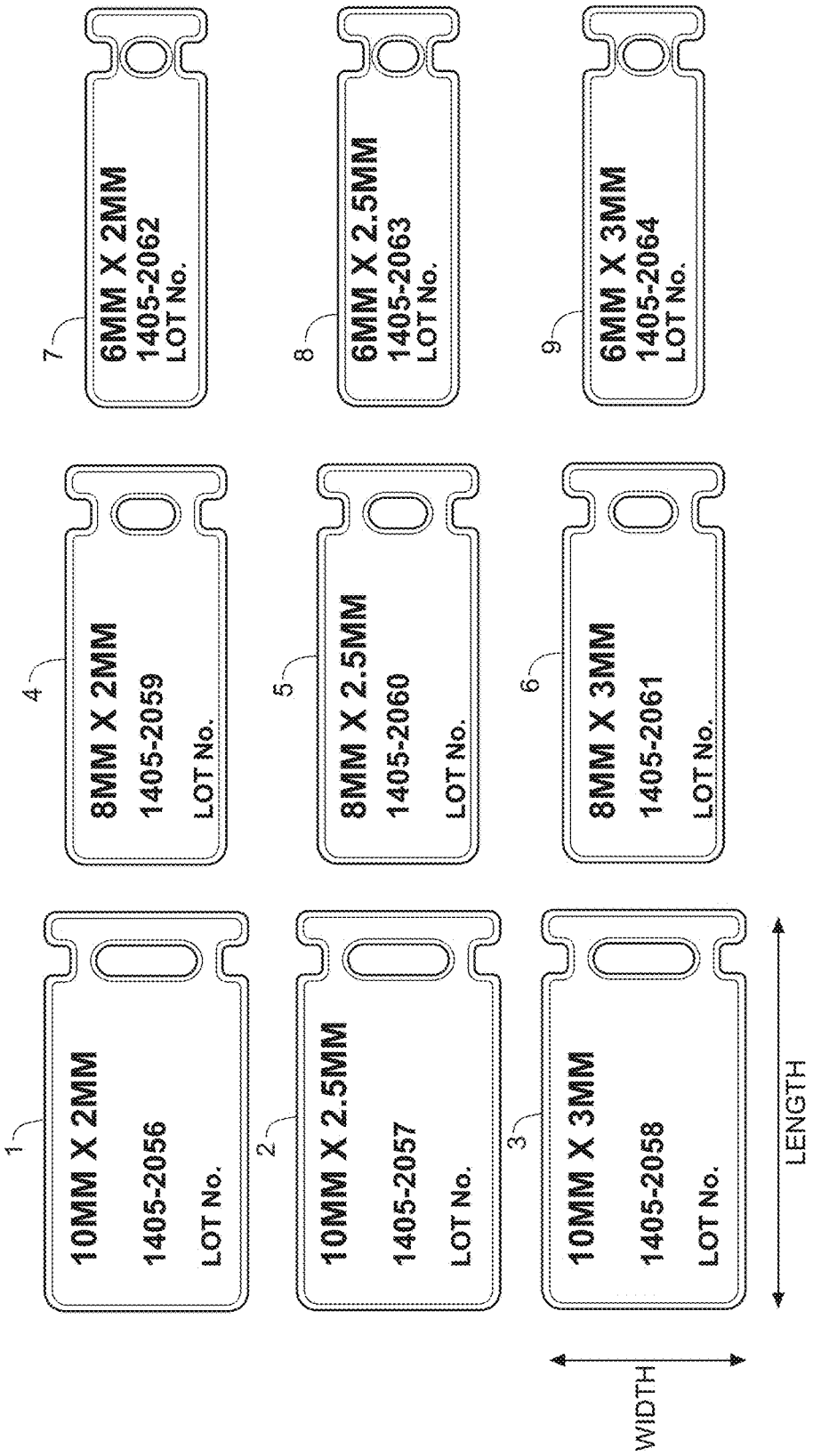
1
10MM X 2MM
1405-2056
LOT No.
2
10MM X 2.5MM
1405-2057
LOT No.
3
10MM X 3MM
1405-2058
LOT No.
4
8MM X 2MM
1405-2059
LOT No.
5
8MM X 2.5MM
1405-2060
LOT No.
6
8MM X 3MM
1405-2061
LOT No.
7
6MM X 2MM
1405-2062
LOT No.
8
6MM X 2.5MM
1405-2063
LOT No.
9
6MM X 3MM
1405-2064
LOT No.
WIDTH
LENGTH

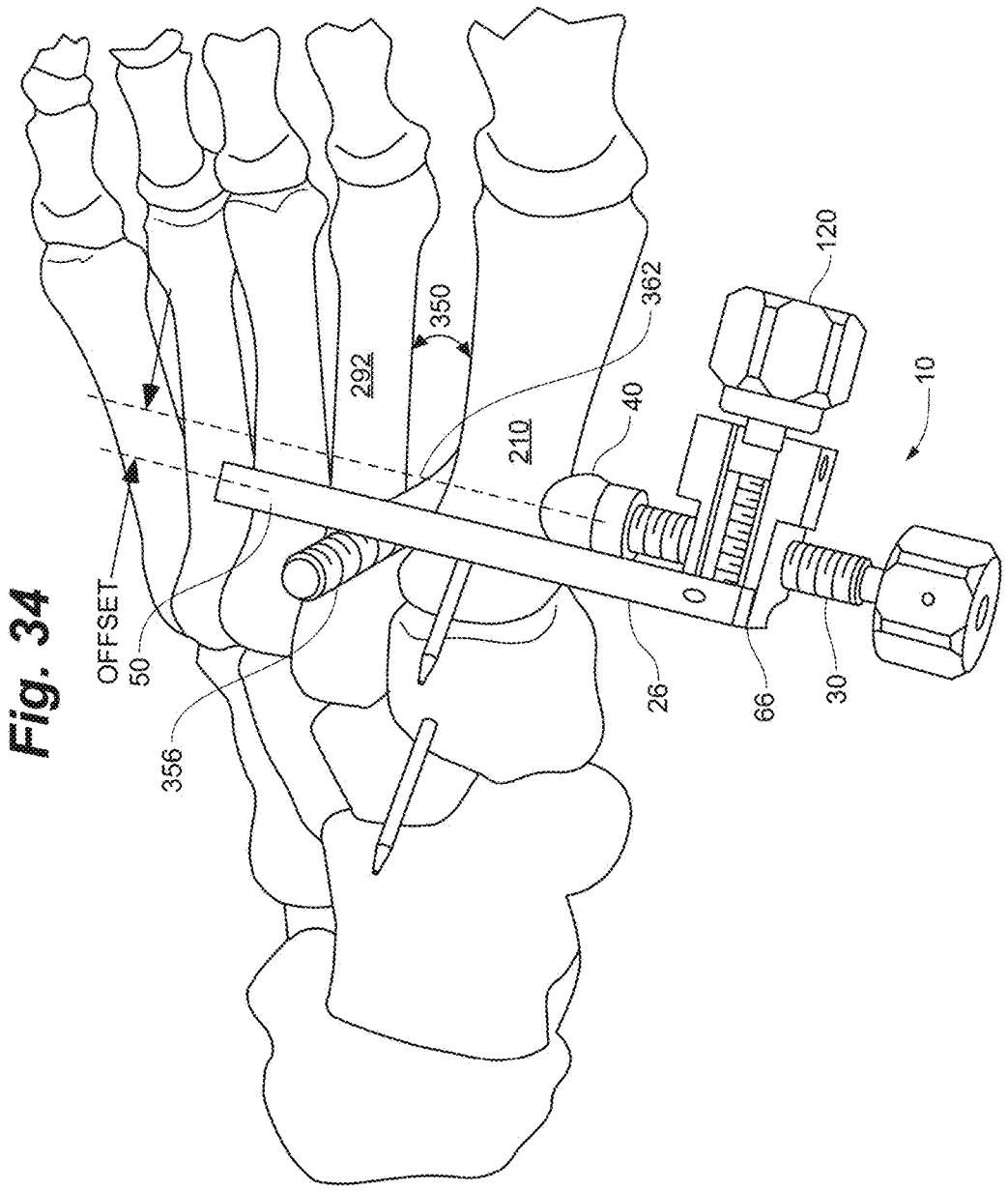

Fig. 34

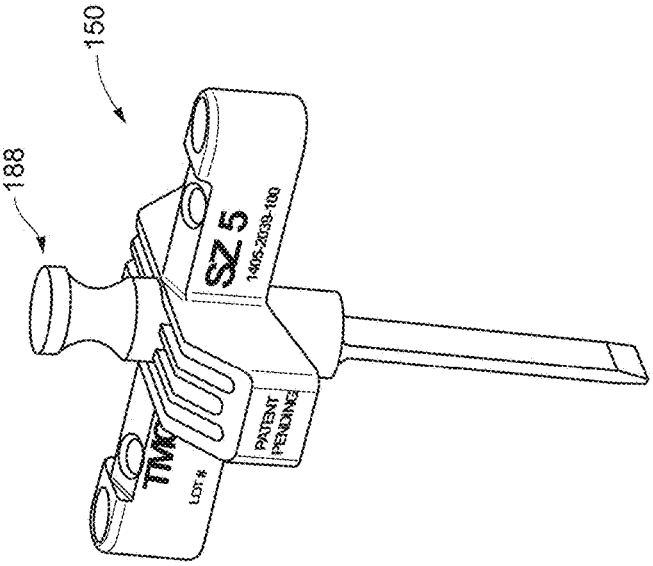

Fig. 36B

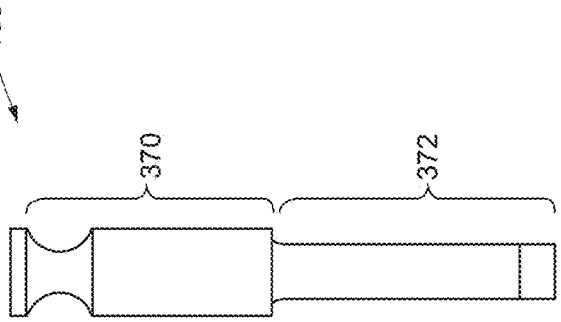

Fig. 35

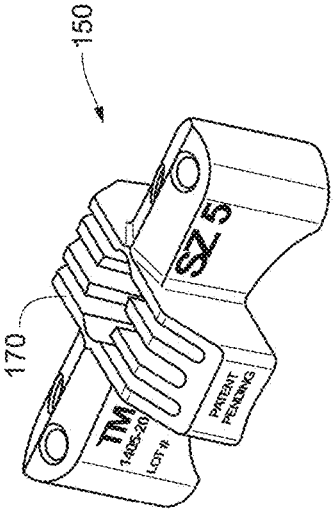

Fig. 36A

BONE POSITIONING GUIDE

RELATED APPLICATIONS

This application is a continuation of U.S. patent application Ser. No. 14/981,335, filed Dec. 28, 2015, and claims the benefit of U.S. Provisional Application No. 62/205,338, filed Aug. 14, 2015, and U.S. Provisional Application No. 62/192,319, filed Jul. 14, 2015. The entire contents of all these applications are hereby incorporated by reference.

TECHNICAL FIELD

This disclosure relates generally to devices and techniques for positioning bones.

BACKGROUND

Bones, such as the bones of a foot, may be anatomically misaligned. In certain circumstances, surgical intervention is required to correctly align the bones to reduce patient discomfort and improve patient quality of life. Traditionally, bone realignment procedures require surgical intervention where a surgeon attempts to manually realign the bones and then fixate the bones in their realigned position. The complexity of attempting to manually realign the bones and then hold the bones in realigned position while fixating the bones in their adjusted position can lead to inconsistent treatment results.

SUMMARY

In general, the present disclosure is directed to bone positioning guides and techniques for using the bone positioning guides. In some examples, a bone positioning guide includes a main body that has a first terminal end and a second terminal end. The main body can wrap or bend about itself such that the first terminal end faces the second terminal end with a bone realignment space defined between the first terminal end and the second terminal end. For example, the main body may have a first bend of approximately 90 degrees and a second bend of approximately 90 degrees with a linear body portion separating the two bends. The first terminal end of main body can have a threaded shaft aperture through which a threaded shaft extends. The shaft can carry a bone engagement member on a distal end of the shaft configured to engage with a bone. The second terminal end of the main body can have a tip also configured to engage with bone.

In use, the bone positioning guide may be provided with the shaft retracted from the main body (e.g., such that the bone engagement member is positioned adjacent to or in contact with the first terminal end of the main body), or a clinician may retract the shaft to enlarge the space between the bone engagement member and the tip. In either case, the clinician can position the tip in contact with a first bone and the bone engagement member in contact with a second bone. For example, the clinician may position the tip in contact with the lateral side of a second metatarsal and translate the shaft relative to the main body until the bone engagement member contacts a medial side of a first metatarsal. The clinician may continue translating the shaft relative to the main body, causing the bone engagement member to advance toward the tip.

As the bone engagement member is advanced toward the tip, the position of the first metatarsal may be realigned and corrected with respect to the second metatarsal. For example, the position of the first metatarsal may be realigned in three planes, including a frontal plane, a transverse plane, and a sagittal plane. After advancing the bone engagement member relative to the tip to a location where suitable realignment is achieved (e.g., as determined by the clinician performing the procedure), the clinician may fixate the position of the realigned first metatarsal while the bone positioning guide holds the first metatarsal in the realigned position. For example, the clinician may use pins, screws, plates, wire and/or other desired fixation instruments to secure the first metatarsal to a medial cuneiform in the realigned position while the bone positioning guide holds the first metatarsal in the realigned position.

In one example, a bone positioning guide is described that includes a main body member, a shaft, and a bone engagement member. The shaft is movably connected to the main body member proximate a first end of the main body. The bone engagement member is rotatably coupled to the shaft and has a surface configured to engage a bone. Further, the bone positioning guide includes a tip at a second end of the main body opposite the first end.

In another example, a method of positioning a bone is described. The method includes engaging a surface of a bone engagement member of a bone positioning guide with a first bone and placing a tip of the bone positioning guide in apposition to a second bone, where the second bone being different from the first bone. The method further includes moving the bone engagement member with respect to the tip to change the position of the first bone with respect to the second bone.

The details of one or more examples are set forth in the accompanying drawings and the description below. Other features, objects, and advantages will be apparent from the description and drawings, and from the claims.

BRIEF DESCRIPTION OF THE DRAWINGS

FIG. **1** is a side perspective view of a bone positioning guide in accordance with an embodiment of the invention.

FIG. **2** is a side perspective view of a bone engagement member of a bone positioning guide in accordance with an embodiment of the invention.

FIG. **3**A is a side perspective view of a tip of a bone positioning guide in accordance with an embodiment of the invention.

FIG. **3**B is a side view of a bone positioning guide with a straight tip in accordance with an embodiment of the invention.

FIG. **3**C is a side view of a bone positioning guide with a nonlinear tip in accordance with an embodiment of the invention.

FIG. **4** is an end view of an actuator of a bone positioning guide in accordance with an embodiment of the invention.

FIG. **5** is a top plan view of a bone preparing guide in accordance with an embodiment of the invention.

FIG. **6**A is a perspective view of a bone preparing guide, a spacer, and a tissue removing instrument location check member in accordance with an embodiment of the invention.

FIG. **6**B is a perspective view of another embodiment of a tissue removing instrument check location member engaged with a bone preparing guide.

FIG. **7** is a perspective view of a bone preparing guide engaged with a spacer in accordance with an embodiment of the invention.

FIG. **8** is a perspective view of a bone preparing guide engaged with a tissue removal instrument location check member in accordance with an embodiment of the invention.

FIG. **9**A is a front view of a bone positioning guide on a deformed foot in accordance with an embodiment of the invention.

FIG. **9**B is a front view of a bone positioning guide on a foot with a corrected alignment in accordance with an embodiment of the invention.

FIG. **10**A is a top view of a bone positioning guide on a deformed foot in accordance with an embodiment of the invention.

FIG. **10**B is a top view of a bone positioning guide on a foot with a corrected alignment in accordance with an embodiment of the invention.

FIGS. **11**A-C depict a sequence of a bone positioning operation using a bone positioning guide on a foot at first, second, and third positions in accordance with an embodiment of the invention.

FIG. **12**A is a front view of a foot with a normal first metatarsal position.

FIG. **12**B is a front view of a foot with an isolated first metatarsal rotation bunion deformity.

FIG. **13**A is a top view of a foot with a normal first metatarsal position.

FIG. **13**B is a top view of a foot with an isolated first metatarsal transverse plane bunion deformity.

FIG. **14**A is a side view of a foot with a normal first metatarsal position.

FIG. **14**B is a side view of a foot with an isolated first metatarsal sagittal plane bunion deformity.

FIG. **15**A is a perspective view and an enlarged view of a foot.

FIG. **15**B is a perspective view of a first metatarsal.

FIG. **16** is a side perspective view of a foot depicting a bone preparation instrument inserted into a joint.

FIG. **17** is a perspective view of a foot depicting a bone positioning guide on the foot prior to an alignment of a first metatarsal.

FIG. **18** is a perspective view of a foot depicting a bone positioning guide on the foot after an alignment of a first metatarsal.

FIG. **19** is a perspective view of a foot depicting a bone positioning guide on the foot after an alignment of a first metatarsal and an insertion of a spacer into a joint space.

FIG. **20** is a perspective view of a foot depicting a bone positioning guide on the foot after an alignment of a first metatarsal and a positioning of a bone preparation guide.

FIG. **21**A is a perspective view of a foot depicting a bone positioning guide on the foot after an alignment of a first metatarsal and a positioning of a bone preparation guide with pins.

FIG. **21**B is another perspective view of a foot depicting a bone positioning guide on the foot after an alignment of a first metatarsal and a positioning of a bone preparation guide with pins.

FIG. **22** is a perspective view of a foot depicting a bone preparation instrument preparing a bone of the foot guided by a guide surface of a bone preparation guide.

FIG. **23** is a perspective view of a foot depicting a bone positioning guide on the foot and a removal of a bone preparation guide.

FIG. **24** is a perspective view of a foot depicting a bone positioning guide on the foot and pins.

FIG. **25** is a perspective view of a foot depicting a bone positioning guide on the foot and a compression pin.

FIG. **26**A is a side perspective view of a foot depicting bone plates across a joint between first and second bones and a compression pin in accordance with an embodiment of the invention.

FIG. **26**B is a side perspective view of a foot depicting bone plates across a joint between first and second bones and a compression pin in accordance with an embodiment of the invention.

FIG. **27** is a side perspective view of a foot depicting bone plates across a joint between first and second bones in accordance with an embodiment of the invention.

FIG. **28**A and FIG. **28**B depict examples of anatomically misaligned metatarsals and metatarsals that have been anatomically aligned using methods and/or instruments in accordance with the invention.

FIG. **29**A and FIG. **29**B depict examples of anatomically misaligned metatarsals and metatarsals that have been anatomically aligned using methods and/or instruments in accordance with the invention.

FIG. **30**A illustrates a portion of a foot having a bunion caused by a misaligned first metatarsal relative to a second metatarsal.

FIG. **30**B shows an example base compression that can be caused after the foot of FIG. **30**A is anatomically aligned.

FIG. **31** illustrates an example bone positioning operation in which a fulcrum is positioned at an intersection between a first bone and a second bone.

FIG. **32** is a perspective view of one example fulcrum.

FIG. **33** illustrates an example system of different sized fulcrums.

FIG. **34** is a perspective view of another bone positioning guide according to an embodiment of the invention.

FIG. **35** illustrates an example configuration of a joint spacer that can allow a bone preparation guide to rotate around the spacer.

FIG. **36**A is a perspective view of an example configuration of a bone positioning guide having an opening with circular cross-sectional shape.

FIG. **36**B is a perspective view of the example bone positioning guide of FIG. **36**A shown with the joint spacer from FIG. **35** inserted into the guide.

DETAILED DESCRIPTION

The following detailed description is exemplary in nature and is not intended to limit the scope, applicability, or configuration of the invention in any way. Rather, the following description provides practical illustrations for implementing exemplary embodiments of the present invention. Examples of constructions, materials, and dimensions are provided for selected elements, and all other elements employ that which is known to those of ordinary skill in the field of the invention. Those skilled in the art will recognize that many of the noted examples have a variety of suitable alternatives.

Embodiments of the invention include a bone positioning guide and method of positioning bones in a medical procedure. In an exemplary application, embodiments of the bone positioning guide can be useful during a surgical procedure, such as a bone alignment, osteotomy, fusion procedure, and/or other procedures where one or more bones are to be prepared (e.g., cartilage or bone removal and/or cut). Such a procedure can be performed, for example, on bones (e.g., adjacent bones separated by a joint or different portions of a single bone) in the foot or hand, where bones are relatively smaller compared to bones in other parts of the human anatomy. In one example, a procedure utilizing an embodiment of the bone positioning guide can be performed to correct an alignment between a metatarsal (e.g., a first metatarsal) and a second metatarsal and/or a cuneiform (e.g., a medial, or first, cuneiform), such as in a bunion correction

surgery. An example of such a procedure is a Lapidus procedure (also known as a first tarsal-metatarsal fusion). In another example, the procedure can be performed by modifying an alignment of a metatarsal (e.g., a first metatarsal). An example of such a procedure is a basilar metatarsal osteotomy procedure.

FIG. **1** shows a side perspective view of a bone positioning guide **10** in accordance with an embodiment of the invention. The bone positioning guide **10** can be useful for positioning a bone (e.g., orientating and/or translating) during a medical procedure. In some embodiments, the bone positioning guide includes a bone engagement member, a tip, a mechanism to urge the bone engagement member and the tip towards each other (e.g. moving the bone engagement member towards the tip, moving the tip towards the bone engagement member, or moving both simultaneously), and an actuator to actuate the mechanism. When the mechanism is actuated it causes a first bone engaged with the bone engagement member to move to correct an alignment in more than one plane with respect to a second bone in contact with the tip. In some embodiments, the correction in more than one plane includes a correction about an axis in a frontal plane.

In the embodiment of FIG. **1**, bone positioning guide **10** includes a main body member **20** and a shaft **30**, and the bone engagement member **40** is connected to the shaft and the tip **50** is connected to the main body member. In general, the main body member **20** can be sized and shaped to clear anatomy or other instrumentation (e.g., pins and guides) while positioned on a patient. In the embodiment of FIG. **1**, the main body member **20** includes a generally C-shaped configuration with a first end **60** and a second end **70**. In some embodiments, the main body is sized and configured to engage bones of a human foot. In addition, although bone positioning guide **10** is illustrated as being formed of two components, main body member **20** and shaft **30**, the guide can be fabricated from more components (e.g., 3, 4, or more) that are joined together to form the guide.

A shaft **30** can be movably connected to the main body member **20** proximate its first end **60**. In some embodiments, the shaft **30** includes threads **80** that engage with the main body member **20** such that rotation of the shaft translates the shaft with respect to the main body member. In other embodiments, the shaft can slide within the main body member and can be secured thereto at a desired location with a set screw. In yet other embodiments, the shaft can be moved with respect to the main body by a ratchet mechanism. In the embodiment shown, the shaft moves along an axis that intersects the tip **50**. In other embodiments, such as that described with respect to FIG. **34**, the shaft **30** and/or bone engagement member **40** is offset from tip **50**.

As shown in FIG. **2**, embodiments of the bone positioning device can have a bone engagement member **40**. In some embodiments, the bone engagement member includes a surface **90** configured to contact a bone, such as a metatarsal or a cuneiform. In the embodiment shown, the surface **90** is concave. Such a surface is adapted to promote surface contact with a generally cylindrical bone, such as a metatarsal. Other embodiments of surface shapes include planar surfaces and V-shaped surfaces. When using a concave or V-shaped bone engagement member **40**, the sidewalls of the concavity or V-shaped groove may be symmetrical or asymmetrical. In a symmetrical configuration, the bottom of the concavity or groove can be centered between upwardly extending sidewalls configured to receive a bone. Each sidewall can extend upwardly to the same height and/or at the same slope. In the asymmetrical configuration, one sidewall can have a different configuration than the opposing sidewall. For example, one of the sidewalls may extend upwardly from the bottom of the concavity or groove to a lower height than the opposing sidewall. As another example, one sidewall may extend upwardly at a different angle than the opposing sidewall. The asymmetrical configuration can be useful for applying a force that is biased laterally instead of only being linear toward tip **50**.

In some embodiments, bone engagement member **40** includes a pin or a clamp. Independent of whether bone engagement member **40** includes such pin or clamp, the bone engagement member can engage an anatomical feature of a bone, such as a ridge (e.g., a medial ridge of a first metatarsal). In such embodiments, the engagement generally prohibits rotational movement of the bone with respect to the bone engagement member. In other embodiments, bone may be allowed to rotate with respect to the bone engagement member.

In the embodiment shown, the bone engagement member **40** is provided on an end of the shaft **30**. In the embodiment of the shaft shown having threads **80**, the bone engagement member **40** can be rotatably coupled to the shaft **30**. In such embodiments, as the shaft is rotated relative to the main body member the bone engagement member **40** may or may not rotate with respect to the main body member even as it translates with respect to the main body member along with the shaft **30** and rotates with respect to the shaft. The bone engagement member may oscillate about the shaft **30**, but generally does not rotate with respect to bone after contact with the bone.

FIGS. **3**A-C depict a tip **50** of bone positioning guide **10**, which can be at a second end **70** of the main body member opposite the first end. The tip **50** can be useful for contacting a bone, generally a bone distinct from a bone contacting the bone engagement member. For example, if the bone engagement member is in contact with a first metatarsal, the tip can be in contact with a metatarsal other than the first metatarsal (e.g., the second, third, fourth, or fifth metatarsal). In some embodiments, the tip is tapered to facilitate percutaneous insertion and contact with bone. The tip can also include a textured surface **100**, such as serrated, roughened, cross-hatched, knurled, etc., to reduce slippage between the tip and bone. In the embodiment shown, the tip further includes a stop **110** to limit a depth of insertion. The shape of the tip can be configured to stably contact bone. For example, FIG. **3**B shows a side view of the bone positioning guide with a generally straight tip **50**, while FIG. **3**C shows a side view of the bone positioning guide with a nonlinear tip **50** (e.g., a tip that is angled or curved). In some embodiments, the tip is configured to restrict translational movement between it and a bone, but to allow rotational movement between it and the bone.

As shown in FIG. **4**, bone positioning guide **10** can also include an actuator (e.g., a knob or a handle) **120** to actuate the mechanism, in this embodiment associated with the shaft. In the embodiment shown, the actuator can be useful for allowing a user to rotate the shaft with respect to the main body member **20**. Also as shown in FIG. **4**, the actuator, shaft, and bone engagement member may include a cannulation **130** to allow the placement of a fixation wire (e.g., K-wire) through these components and into contact with or through a bone engaged with the bone engagement member. For example, the fixation wire can be placed into the bone engaged with bone engagement member **40** to fix the position of the bone engagement member with respect to the bone. In another example, the fixation wire can be placed through the bone in contact with the bone engagement

member and into an adjacent bone to maintain a bone position of the bone in contact with the bone engagement member and the adjacent bone.

In other embodiments, the mechanism to urge the bone engagement member and the tip towards each other can include a tenaculum or tong structure. In such embodiments, the guide can include a first shaft pivotably connected to a second shaft. A first end of each shaft can include an actuator, such as a handle. A second end of the first shaft can include a bone engagement member, as described above. And a second end of the second shaft can include a tip, as described above. In use, the actuator can be actuated (e.g., squeezed together) to move the bone engagement member and the tip closer together to position bone. Other embodiments of this type may include another set of shafts and another pivoting connection such that the bone engagement member and tip translate towards each other when the actuator is actuated.

In other embodiments, the mechanism to urge the bone engagement member and the tip towards each other can include a rack and pinion structure. In such embodiments, the rack can include a tip, as described above. And the pinion can include a bone engagement member, as described above, and an actuator (e.g., a knob). In use, the actuator can be actuated (e.g., turned about an axis generally perpendicular to a direction of travel) to move the bone engagement member and the tip closer together to position bone.

Embodiments of the bone positioning guide may include any suitable materials. In certain embodiments, the bone positioning guide is fabricated from a radiolucent material such that it is relatively penetrable by X-rays and other forms of radiation, such as thermoplastics and carbon-fiber materials. Such materials are useful for not obstructing visualization of bones using an imaging device when the bone positioning guide is positioned on bones.

Embodiments of the bone positioning guide can be useful in operation for temporarily positioning a bone or bones during a medical procedure. Bone positioning can be useful, for instance, to correct an anatomical misalignment of bones and temporarily maintain an anatomically aligned position, such as in a bone alignment and/or fusion procedure. In some embodiments, the bone positioning guide is capable of reducing an angle between the first metatarsal and the second metatarsal from over 10 degrees (e.g., up to about 35 degrees) to about 10 degrees or less (e.g., to about 1-5 degrees), including to negative angles of about −5 degrees. In some embodiments, the bone positioning guide is also capable of rotating the first metatarsal about its long axis with respect to the medial cuneiform from a rotational angle of over 4 degrees to a rotational angle of less than 4 degrees (e.g., to about 0 to 2 degrees).

In some embodiments, a bone preparation guide may be provided to facilitate the preparation of a bone. The bone preparation guide can be provided with a bone positioning guide, or either device can be provided or used independently. An example of a bone preparation guide **150** is shown in FIG. **5**. In some embodiments, the bone preparation guide **150** includes a body **154** defining a first guide surface **160** to define a first preparing plane and a second guide surface **164** to define a second preparing plane. A tissue removing instrument (e.g., a saw, rotary bur, osteotome, etc., not shown) can be aligned with the surfaces to remove tissue (e.g., remove cartilage or bone and/or make cuts to bone). The first and second guide surfaces **160**, **164** can be spaced from each other by a distance, (e.g., between about 2 millimeters and about 10 millimeters, such as between about 4 and about 7 millimeters). In the embodiment shown, the first and second guide surfaces are parallel, such that cuts to adjacent bones using the guide surfaces will be generally parallel.

In some embodiments, as shown in FIG. **5**, a first facing surface **166** is positioned adjacent the first guide surface **160** and/or a second facing surface **168** is positioned adjacent the second guide surface **164**. In such embodiments, the distance between the first guide surface and the first facing surface defines a first guide slot, and the distance between the second guide surface and the second facing surface defines a second guide slot. Each slot can be sized to receive a tissue removing instrument to prepare the bone ends. The first and second slots may be parallel or skewed. In the illustrated embodiment, the facing surfaces each contain a gap, such that the surface is not a single, continuous surface. In other embodiments, the facing surfaces can be a single, continuous surface lacking any such gap.

An opening **170** can be defined by the body **154** between the first and second guide surfaces. The opening can be an area between the guide surfaces useful for allowing a practitioner to have a visual path to bones during bone preparation and/or to receive instruments. In the embodiment shown, the opening extends across the body and a distance from a surface **172** opposite of the first facing surface **166** to a surface **174** opposite of the second facing surface **168**.

The embodiment shown also includes a first end **176** extending from the body **154** in a first direction and a second end **178** extending from the body in a second direction. The second direction can be different than the first direction (e.g., an opposite direction). As shown, each of the first end and the second end can include at least one fixation aperture **180** configured to receive a fixation pin (not shown in FIG. **5**) to secure the guide to a bone. As shown, such apertures may extend through the end at a vertical or skewed angle relative to a top surface of the guide.

The bone preparation guide **150** can also include a first adjustable stabilization member **182** engaged with the first end **176**. In some embodiments, the bone preparation guide can include a second adjustable stabilization member **184** engaged with the second end **178**. Each of the members can be threaded and engage a threaded aperture defined by the ends. The elevation of each end can be adjusted with respect to a bone by adjusting the stabilization member. In some embodiments, as shown, the stabilization members are cannulated such that they can receive a fixation pin.

As shown in FIGS. **6**A and **7**, the bone preparation guide can also include a spacer **188** extending downward from the body **154** and configured to be placed into a joint. In some embodiments, the spacer **188** is selectively engageable with the body. The spacer can have a first portion **190** configured to extend into a joint space and a second portion **192** engageable with the body **154**. In the embodiment shown, the spacer can be received within opening **170**, such that the spacer extends from the body in between the first and second guide surfaces. Such a spacer can be useful for positioning the body at a desired position with respect to a joint and for properly positioning the guide with respect to bones to be cut in more than one plane (e.g., three planes selected from more than one of a frontal plane, a transverse plane, and a sagittal plane). The distance between the spacer and the first guide surface can define a length of tissue removal (e.g., bone or cartilage to be cut) from a first bone, and the distance between the spacer and the second guide surface can define a length of tissue removal (e.g., bone or cartilage to be cut) from a second bone.

As shown in FIGS. **6**A/B and **8**, the bone preparation guide can also include a tissue removal location check member **194** engageable with the body **154** and configured to extend to a first bone and a second bone. The tissue removal location check member can have a first portion **196** configured to extend into contact with first and second bones and a second portion **198** engageable with the body. In the embodiments shown in FIGS. **6**A and **8**, the tissue removal location check member extends from the body at both the first and second guiding surfaces. In other embodiments, such as the embodiment shown in FIG. **6**B, separate tissue removal location check members are provided for independent insertion into respective slots of the guide. Accordingly, embodiments of tissue removal location check members are useful for allowing a practitioner to see where a tissue removing instrument guided by the surfaces will contact the bone to be prepared.

Embodiments of the bone preparation guide can be useful in operation for guiding a preparation of a bone or bones at a targeted anatomy. Bone preparation can be useful, for instance, to facilitate contact between leading edges of adjacent bones, separated by a joint, or different portions of a single bone, separated by a fracture, such as in a bone alignment and/or fusion procedure.

Embodiments of the present invention also include methods for temporarily fixing an orientation of a bone or bones, for example, prior to or in conjunction with permanently fixing the orientation of the bone or bones. In general, the method of positioning a bone includes the steps of moving a bone from an anatomically misaligned position to an anatomically aligned position with respect to another bone and preparing an end of the moved bone and a facing end of another bone. In some embodiments, the end of at least one of the moved bone and the other bone is prepared after moving the bone into the aligned position. In certain embodiments, the bone is anatomically aligned in more than one plane with respect to another bone by applying a force to one bone at a single location, such that the bone both translates and rotates in response to the force. In certain embodiments, the moving step can be accomplished with a bone positioning device and/or the preparing step can be accomplished with a bone preparation guide, as described herein.

FIGS. **9**A-B depict fontal views of a bone positioning guide **10** on a foot **200** having a first metatarsal **210**, a medial cuneiform **220**, a second metatarsal **292**, and a third metatarsal **294**. FIG. **9**A depicts a foot **200** with an uncorrected bunion deformity, while FIG. **9**B depicts the foot **200** with an alignment corrected by the bone positioning guide **10**. Solid line L**1** represents the starting location of the bone positioning guide **10** and dotted line L**2** represents the finishing location of the bone positioning guide. As shown, as the bone positioning guide **10** is actuated it rotates with the first metatarsal **210** about an axis extending through the frontal plane as it pushes the first metatarsal **210** laterally in the transverse plane and plantarly in the sagittal plane. Accordingly, in this example, the position of the first metatarsal **210** is corrected with respect to the second metatarsal **292** generally in three planes by actuating a single bone positioning guide **10** to urge a bone engagement member **40** toward a tip **50**. FIG. **10**A shows a top view of a foot **200** with an uncorrected bunion deformity, while FIG. **10**B shows a top view of the foot **200** with an alignment corrected by the bone positioning guide **10**, emphasizing the rotational correction in the frontal plane and the lateral correction in the transverse plane.

FIGS. **11**A-C show three sequential images of a bone positioning guide **10** on a foot **200** positioning a first metatarsal **210** with respect to a second metatarsal **292**. FIG. **11**A represents the beginning of the procedure, FIG. **11**B the middle, and FIG. **11**C the end. The orientation of the pins **270** is useful for visualizing the amount of rotation of the first metatarsal **210** in each image. With respect to FIGS. **11**A-C, it can be seen the bone positioning guide **10** and the first metatarsal **210** are rotating in the frontal plane in response to actuation of bone positioning guide **10**. Further, the angle between the first metatarsal **210** and second metatarsal **292** is reduced, as the space that can be seen between the first and second metatarsals in FIG. **11**A is eliminated in FIG. **11**C.

Each of the three potential planes of deformity will now be described in isolation. FIGS. **12**A and **12**B show frontal plane views of a foot **200**. In FIG. **12**A, the foot **200** is normal, while in FIG. **12**B the foot is depicted with an uncorrected bunion deformity showing an isolated axial rotation of the first metatarsal **210**. Solid line L**3** indicates the alignment of the first metatarsal **210** relative to ground, while dotted line L**4** in FIG. **12**B indicates the extent of axial rotation in the frontal plane.

FIGS. **13**A and **13**B show transverse plane views of a foot **200**. In FIG. **13**A, the foot **200** is normal, while in FIG. **13**B the foot is depicted with an uncorrected bunion deformity showing an isolated transverse plane first metatarsal **210** deviation. Solid line L**5** indicates the alignment of the second metatarsal **292** and solid line L**6** indicates the proper alignment of the first metatarsal **210** relative to the second metatarsal **292**. The angle between these two lines forms the intermetatarsal angle (IMA). Dotted line L**7** in FIG. **13**B indicates the extent of transverse deviation.

FIGS. **14**A and **14**B show sagittal plane views of a foot **200**. In FIG. **14**A, the foot **200** is normal, while in FIG. **14**B the foot is depicted with an uncorrected bunion deformity showing an isolated sagittal deviation of the first metatarsal **210**. Solid line L**8** indicates the proper alignment of the first metatarsal **210**, while dotted line L**9** in FIG. **14**B indicates the extent of sagittal deviation.

A specific embodiment of a method in accordance with an embodiment of the invention includes the steps of engaging a bone engagement member with a first bone, placing a tip of the bone positioning guide in apposition to a second bone, the second bone being different from the first bone, and moving the bone engagement member with respect to the tip to change the position of the first bone with respect to the second bone in more than one plane. In some embodiments, after alignment, at least one of an end of the first bone and a facing end of a third bone are prepared (e.g., only the end of the first bone or both the end of the first bone and the end of the second bone), optionally using a preparation guide.

In some embodiments, the method includes the step of mobilizing a joint for a corrective procedure. For example, after creating surgical access to the joint and before moving the bones into an aligned position, tissue can be released to allow a bone, such as a metatarsal, to rotate freely. In some embodiments, obstructing bone may be excised (e.g., a dorsolateral flare of the metatarsal base, a plantar flare of the metatarsal base (sometimes referred to as a plantar condyle), part of an end of a metatarsal facing a cuneiform, or osteophyte) to further promote free rotation by creating relatively flat surfaces with respect to a frontal plane. An example of a dorsolateral flare F on a first metatarsal **210** of a foot **200** is shown in FIG. **15**A. An example of a plantar flare PF on a first metatarsal **210** is shown in FIG. **15**B. FIG. **15**B also depicts a medial ridge MR, which, in some

embodiments, can be engaged by the bone engaging member of a bone positioning guide.

Embodiments of methods in accordance with the invention can also include steps performed after preparing the ends of the bones. For example, the ends of the bones may be placed in apposition and optionally compressed together and the position of the bones can be fixed with one or more bone fixation devices (e.g., compressing bone screw, bone plate, bone staple, external fixator, intramedullary implant or nail) prior to a closing of the surgical access to the joint.

An exemplary method will now be described with respect to FIGS. **16-27** depicting a foot **200** having a first metatarsal **210**, a medial cuneiform **220**, and a second metatarsal **292**. Note, unless otherwise indicated, the steps described need not be carried out in the order described.

After customary surgical preparation and access, a bone preparation instrument **296** can be inserted into the joint (e.g., first tarsal-metatarsal joint) to release soft tissues and/or excise the plantar flare from the base of the first metatarsal **210**, as shown in FIG. **16**. Excising the plantar flare may involve cutting plantar flare off the first metatarsal **210** so the face of the first metatarsal is generally planar. This step helps to mobilize the joint to facilitate a deformity correction. In some embodiments, the dorsal-lateral flare of the first metatarsal may also be excised to create space for the deformity correction (e.g., with respect to rotation of the first metatarsal). In certain embodiments, a portion of the metatarsal base facing the medial cuneiform can be removed during this mobilizing step.

An incision can be made and a tip **50** of a bone positioning guide **10** can be inserted on the lateral side of a metatarsal other than the first metatarsal **210**, such as the second metatarsal **292**. As shown in FIG. **17**, the tip can be positioned proximally at a base of the second metatarsal **292** and a third metatarsal **294** interface. A surface of a bone engagement member **40** can be placed on the proximal portion of the first metatarsal **210**. In some embodiments, the bone engagement member engages a medial ridge of the first metatarsal **210**. As shown, the body **20** of the positioning guide can be generally perpendicular to the long axis of the second metatarsal **292**.

As depicted in FIG. **18**, the actuator **120** can be actuated to extend the shaft **30** to reduce the angle (transverse plane angle between the first metatarsal and the second metatarsal) and rotate the first metatarsal about its axis (frontal plane axial rotation). The first metatarsal **210** can be properly positioned with respect to the medial cuneiform **220** by moving the bone engagement member **40** with respect to the tip **50**. In some embodiments, such movement simultaneously pivots the first metatarsal with respect to the cuneiform and rotates the first metatarsal about its longitudinal axis into an anatomically correct position to correct a transverse plane deformity and a frontal plane deformity. In certain embodiments, body **20** rotates in a generally lateral direction during this step. In some embodiments, fixation pins (not shown in FIG. **18**) can be inserted into the bones prior to the positioning step (e.g., freehand or using apertures in the guide as a template), and can be used to impart additional force (transverse, sagittal, and/or frontal plane rotational) to the first metatarsal **210**, if desired. The bone positioning guide **10** can hold the desired position of the first metatarsal **210** with respect to the second metatarsal **292**. After the desired correction is achieved, a fixation wire **298** can be inserted through a cannulation in the shaft **30** and driven into the first metatarsal **210** and the second metatarsal **292** to hold the corrected position.

As depicted in FIG. **19**, a joint spacer **188** can be positioned within the joint between the first metatarsal and the medial cuneiform.

As shown in FIG. **20**, a bone preparation guide **150** can be placed over the joint spacer **188** and engaged with the joint spacer to set a position and orientation of the bone preparation guide relative to the joint. As shown, the bone preparation guide **150** can be positioned proximal to the bone positioning guide **10** in longitudinal alignment with the long axis of the first metatarsal **210** and the medial cuneiform **220**, generally on the dorsal or dorsal-medial surface. In other embodiments, the spacer **188** is positioned after the guide **150** is provisionally placed on the bones. In yet other embodiments, bone preparation guide **150** and joint spacer **188** are placed simultaneously. In still other embodiments, bone preparation guide **150** is placed on the bones without using joint spacer **188** to aid with positioning.

As depicted in FIGS. **21**A and **21**B, one or more fixation pins **270** can be inserted into apertures of the bone preparation guide **150** to secure the guide to the first metatarsal **210** and the medial cuneiform **220**. As shown, some pins **270** can be inserted at an angle or in a converging orientation to help prevent movement of the bone preparation guide **150** during a tissue removing step. As shown, two of the pins **270**, one on the first metatarsal and one on the medial cuneiform, are parallel to allow the bone preparation guide **150** to be removed from the foot without removing all the pins. After insertion of the pins **270**, the spacer **188** can optionally be removed in embodiments having a selectively engageable spacer (e.g., a joint spacer **188** that is physically removable from bone preparation guide **150**).

In some embodiments, the location of the intersection of the tissue removing instrument and the bone to be prepared is confirmed before bone preparation. In one embodiment, a tissue removing instrument location check member can be engaged with the preparation guide to visually confirm where a tissue removal instrument will contact the bone. In another embodiment, a tissue removal instrument is engaged with the preparation guide to visually confirm where the instrument will contact the bone. In either embodiment, such visual confirmation can include the use of an imaging device, such as an X-ray. If the position of the preparation guide is correct, additional fixation pins may be inserted through the apertures (e.g., angled apertures) to further fix the position of the preparation guide with respect to the first metatarsal and the medial cuneiform. In some embodiments, the spacer is reattached prior to further bone preparation steps.

In some embodiments, the end of the first metatarsal **210** facing the medial cuneiform **220** can be prepared with a tissue removing instrument **296** guided by a guide surface of bone preparation guide **150** (e.g., inserted through a slot defined by a first guide surface and a first facing surface). In some embodiments, the first metatarsal **210** end preparation is done after the alignment of the bones, e.g., by actuating bone positioning guide **10** before preparing the end of first metatarsal **210**. In other embodiments, the first metatarsal **210** end preparation is done before the alignment of the bones, e.g., by preparing the end of the first metatarsal **210** before actuating bone positioning guide **10**.

In addition, as shown in FIG. **22**, the end of the medial cuneiform **220** facing the first metatarsal **210** can be prepared with the tissue removing instrument **296** guided by a guide surface of bone preparation guide **150** (e.g., inserted through a slot defined by a second guide surface and a second facing surface). In some embodiments, the medial cuneiform **220** end preparation is done after the alignment of

the bones. In yet other embodiments, the medial cuneiform **220** end preparation is done before the alignment of the bones. In embodiments that include cutting bone or cartilage, the cuneiform cut and the metatarsal cut can be parallel, conforming cuts. In the specific embodiment shown in FIG. **22**, a saw blade can be inserted through a first slot to cut a portion of the medial cuneiform and the saw blade can be inserted through a second slot to cut a portion of the first metatarsal (e.g., in some embodiments the medial cuneiform can be cut before the first metatarsal). Accordingly, in the embodiment shown, the cuts to both the first metatarsal and the medial cuneiform were preformed after the first metatarsal was positioned.

Any angled/converging pins can be removed and the bone preparation guide **150** can be lifted off the parallel pins **270**, as shown in FIG. **23**. The parallel pins can be referred to as "reference pins" which can serve as a reference in later steps to ensure that the corrected alignment of the first metatarsal **210** has been maintained. The joint spacer can also be removed before, after, or simultaneously with the bone preparation guide. In some embodiments, the bone positioning guide **10** is also removed from the foot.

The tissue (e.g., bone or cartilage slices) from the first metatarsal and the medial cuneiform can be removed from the joint site and the joint surfaces can be fenestrated, if desired. If the bone positioning guide was taken off the foot, it can be put back on, as shown in FIG. **24**, before the additional steps discussed below.

After preparation, the ends of the two bones can be placed in apposition and optionally compressed together by provisionally fixating the joint. For example, the two bones may be placed in apposition by placing the cut end of the first metatarsal **210** in abutment with the cut end of the medial cuneiform **220**. In some examples, the cut end of the first metatarsal **210** is placed adjacent to, and optionally in contact with, the cut end of the medial cuneiform **220**.

As shown in FIG. **25**, a compression pin, such as a threaded olive pin **300** can be inserted through the first metatarsal **210** and into the medial cuneiform **220** to provide compression and provisional fixation between the first metatarsal and the medial cuneiform. Additional compression pins can be inserted to provide additional stability. As shown, the parallel reference pins should be aligned during this step. In some embodiments, a practitioner checks for alignment of the parallel reference pins prior to insertion of the compression pin, and, if they are not aligned, adjusts the position of the first metatarsal until desired alignment is achieved.

Although they can be left in place, in some embodiments the parallel reference pins and bone positioning guide can be removed and a bone fixation device (e.g., two bone plates positioned in different planes, as shown) can be applied to stabilize the joint for fusion. FIG. **26**A shows a first bone plate **310** positioned on a dorsal-medial side of the first metatarsal and medial cuneiform and a second bone plate **320** positioned on a medial-plantar side of the first metatarsal and the medial cuneiform. In other embodiments, such as the embodiment shown in FIG. **26**B, the second bone plate **320** can be a helical bone plate positioned from a medial side of the cuneiform to a plantar side of the first metatarsal across the joint space. The plates can be applied with the insertion of bone screws.

As shown in FIG. **27**, the compression pin can be removed and the incision can be closed.

FIGS. **28** A/B and **29**A/B include examples of anatomically misaligned metatarsals and metatarsals that have been anatomically aligned using methods and/or instruments in accordance with the invention. FIG. **28**A shows a left foot pre-operation and post-operation, while FIG. **28**B shows a right foot pre-operation and post-operation. As can be seen from a comparison of the pre-operative images to the post-operative images, the patients' intermetatarsal angle (IMA) was significantly reduced. FIGS. **29**A and **29**B show the correction of an axial rotation in a frontal rotational plane. FIG. **29** A shows a pre-operative image and a post-operative image of a right foot. Drawings of a metatarsal **210** are also provided to illustrate the rotation. The rotation of the metatarsal can be seen by the position of sesamoid bones **400**, which are depicted as having been rotated under the first metatarsal **210** in the post-operative drawing. FIG. **29**B shows pre-operative views of a left foot **200** and a right foot **200**. Again, by comparing the location of the sesamoid bones **400** with respect to a reference location, such as ground, the planter surface of the foot, and/or a cuneiform, it can be seen this patient's metatarsal is rotated out of alignment.

Methods in accordance with embodiments of the invention can be useful for temporarily positioning a bone or bones. Bone positioning can be useful, for instance, to correct an anatomical misalignment of bones and temporarily maintain an anatomically aligned position, such as in a bone alignment and/or fusion procedure. In some embodiments, an "anatomically aligned position" means that an angle of a long axis of a first metatarsal relative to a long axis of a second metatarsal is about 10 degrees or less in the transverse plane or sagittal plane. In certain embodiments, anatomical misalignment can be corrected in both the transverse plane and the frontal plane. In the transverse plane, a normal intermetatarsal angle ("IMA") between a first metatarsal and a second metatarsal is less than about 9 degrees. An IMA of between about 9 degrees and about 13 degrees is considered a mild misalignment of the first metatarsal and the second metatarsal. An IMA of greater than about 16 degrees is considered a severe misalignment of the first metatarsal and the second metatarsal. In some embodiments, methods in accordance with the invention are capable of anatomically aligning the bone(s) by reducing the IMA from over 10 degrees to about 10 degrees or less (e.g., to an IMA of about 1-5 degrees), including to negative angles of about −5 degrees or until interference with the second metatarsal, by positioning the first metatarsal at a different angle with respect to the second metatarsal.

With respect to the frontal plane, a normal first metatarsal will be positioned such that its crista prominence is generally perpendicular to the ground and/or its sesamoid bones are generally parallel to the ground and positioned under the metatarsal. This position can be defined as a metatarsal rotation of 0 degrees. In a misaligned first metatarsal, the metatarsal is axially rotated between about 4 degrees to about 30 degrees or more. In some embodiments, methods in accordance with the invention are capable of anatomically aligning the metatarsal by reducing the metatarsal rotation from about 4 degrees or more to less than 4 degrees (e.g., to about 0 to 2 degrees) by rotating the metatarsal with respect to the medial cuneiform.

While various embodiments of bone positioning and preparing guide systems and methods have been described, is should be appreciated that the concepts of the disclosure can be altered in practice, e.g., based on the needs of the clinician, the patient undergoing the bone repositioning procedure, the specific anatomy being treated, and/or the target clinical outcome. As one example, the described systems and techniques may be modified to utilize a fulcrum about which rotation and/or pivoting of one bone relative to

another bone occurs via bone positioning guide **10**. The fulcrum can establish and/or maintain space between adjacent bones being compressed between bone engagement member **40** and tip **50** of bone positioning guide **10**, preventing lateral translation or base shift of the bones during rotation and pivoting.

FIG. **30**A illustrates a portion of a foot having a bunion caused by a misaligned first metatarsal **210** relative to second metatarsal **292**. FIG. **30**B shows the foot of FIG. **30**A after being anatomically aligned to correct the misalignment using bone positioning guide **10**. As shown, first metatarsal **210** has been rotated counterclockwise in the frontal plane (from the perspective of a patient, clockwise from the perspective of a frontal observer) and also pivoted in the transverse plane (e.g., such that the angle **350** between the first metatarsal **210** and second metatarsal **292** is reduced). Rotation and pivoting of first metatarsal **210** can cause the base **352** of first metatarsal **210** to shift relative to medial cuneiform **220**. In general, it is desirable that the offset **354**A between first metatarsal **210** and medial cuneiform **220** be reduced to zero (e.g., such that there is substantially no offset) after rotation and pivoting. As shown in the illustrated application of FIG. **30**B, however, the base **352** of first metatarsal **210** abutting medial cuneiform **220** has shifted toward second metatarsal **292**. This results in a transverse offset **354**B of first metatarsal **210** toward second metatarsal **292**, causing base compression between first metatarsal **210** and second metatarsal **292**.

To help avoid the base shift and offset **354**B observed in FIG. **30**B, a clinician can insert a fulcrum in the notch between first metatarsal **210** and second metatarsal **292** at the base of the metatarsals (e.g., adjacent respective cuneiform) before actuating bone positioning guide **10**. The fulcrum can provide a point about which first metatarsal **210** can rotate and/or pivot while helping minimize or avoid base compression between the first metatarsal and the second metatarsal. In addition, use of the fulcrum may cause first metatarsal **210** and medial cuneiform **220** to be better angled relative to the guide slots of bone preparation guide **150** (once installed), providing a better cut angle through the guide slots then without use of the fulcrum. This can help reduce or eliminate unwanted spring-back, or return positioning, of first metatarsal **210** after removing bone positioning guide **10**.

FIG. **31** illustrates a bone positioning operation in which a fulcrum **356** is positioned at an intersection between a first bone and a second bone, where the first bone is being realigned relative to the second bone. In particular, FIG. **31** illustrates fulcrum **356** being positioned between first metatarsal **210** and second metatarsal **292**. Fulcrum **356** may be positioned distally of bone preparation guide **150** between first metatarsal **210** and second metatarsal **292** as shown in FIG. **31** or, in other applications, proximally of the guide (e.g., at the ends of the first and second metatarsals abutting the medial and intermediate cuneiform bones, respectively).

When used, the clinician can insert fulcrum **356** between first metatarsal **210** and second metatarsal **292** (or other adjacent bones, when not performing a metatarsal realignment) at any time prior to actuating bone positioning guide **10**. In different embodiments, fulcrum **356** can be inserted between first metatarsal **210** and second metatarsal **292** before or after inserting joint spacer **188** and/or placing bone preparation guide **150** over the joint being operated upon. In one embodiment, the clinician prepares the joint being operated upon to release soft tissues and/or excise the plantar flare from the base of the first metatarsal **210**, as discussed above. Either before or after installing bone positioning guide **10** over adjacent bones, for example with bone engagement member **40** positioned in contact with the medial ridge of the first metatarsal **210** and tip **50** positioned in contact with second metatarsal **292**, the clinician inserts fulcrum **356** at the joint between the first metatarsal and the second metatarsal. The clinician can subsequently actuate bone positioning guide **10** (e.g., rotate knob **120**). In the case of a left foot as shown in FIG. **31**, actuation of bone positioning guide **10** causes the first metatarsal **210** to rotate counterclockwise in the frontal plane (from the perspective of a patient) and also pivot in the transverse plane about the fulcrum. In the case of a right foot (not shown), actuation causes the first metatarsal to rotate clockwise in the frontal plane (from the perspective of a patient) and also pivot in the transverse plane about the fulcrum. Thus, for both feet, actuation of bone positioning guide **10** can supinate the first metatarsal in the frontal plane and pivot the first metatarsal in the transverse plane about fulcrum **356**. While use of fulcrum **356** can minimize or eliminate base compression between adjacent bones being operated upon, in other embodiments as discussed above, the described systems and techniques can be implemented without using the fulcrum.

In instances in which fulcrum **356** is used, any suitable mechanical instrument can be used for the fulcrum. FIG. **32** is a perspective view of one example instrument that can be used as fulcrum **356**. In this embodiment, fulcrum **356** has a generally rectangular shape and tapers in thickness along at least a portion of the length from the trailing end **358** to the leading end **360**. Fulcrum **356** may be sized sufficiently small so that it does not interfere with placement of bone preparation guide **150** on the joint being worked upon. In some embodiments, the clinician is provided a system containing multiple different size fulcrums and allowed to choose the specific sized fulcrum desired for the specific procedure being performed. FIG. **33** illustrates an example kit or system of different sized fulcrums, labeled with exemplary "width×thickness" sizes, that may be provided to a clinician in such an embodiment. In some examples, fulcrum **356** has a width ranging from 5 millimeters to 15 millimeters (e.g., about 6 millimeters to about 10 millimeters) and a thickness ranging 1 millimeter to 12 millimeters (e.g., about 2 millimeters to about 3 millimeters), although fulcrums with different dimensions can be used. While FIGS. **32** and **33** illustrate one example style of fulcrum, other mechanical instruments providing a fulcrum functionality can be used without departing from the scope of the disclosure. For instance, as alternative examples, a surgical pin or screw driver head may be used as fulcrum **356**.

As discussed above, bone positioning guide **10** can have a variety of different configurations, including a configuration in which bone engagement member **40** is laterally offset from tip **50**. FIG. **34** is a perspective view of bone positioning guide **10** showing an example arrangement in which bone engagement member **40** is laterally offset from tip **50**. In this embodiment, the first end **60** of main body member **20** is laterally offset from an axis **362** extending through shaft **30** and a geometric center of bone engagement member **40**. In particular, in the illustrated configuration, tip **50** is offset laterally in the direction of the cuneiform relative to bone engagement member **40**. As a result, when bone positioning guide **10** is actuated, e.g., by rotating knob **120**, a moment can be created by the offset tip. This can cause the end of the first metatarsal **210** adjacent the proximal phalange to pivot toward the second metatarsal **292** and close angle **350**, e.g., while the opposite end of the first metatarsal adjacent the medial cuneiform pivots away from the second

metatarsal. This can also help avoid base compression between the first and second metatarsals.

As discussed above with respect to FIGS. **19** and **20**, a joint spacer **188** can be positioned in a joint between a first metatarsal and a medial cuneiform before placing bone preparation guide **150** over the joint spacer. Bone preparation guide **150** can have an opening **170** (FIG. **5**) sized to receive joint spacer **188**. In some examples, opening **170** of bone preparation guide **150** is size and/or shaped indexed to joint spacer **188** such that there is substantially no, or no, relative movement between the guide and spacer (once bone preparation guide **150** is placed over joint spacer **188**). This can arrangement can ensure that bone preparation guide **150** is positioned precisely at the location where guided by joint spacer **188**.

In practice, once bone positioning guide **150** is placed over joint spacer **188**, the guide slots of the bone positioning guide may not be perfectly aligned with the ends of the bones (e.g., first metatarsal **210** and medial cuneiform **220**) to be cut through the guide slots. Accordingly, in other configurations, opening **170** of bone preparation guide **150** may not be sized and/or shaped and/or indexed to joint spacer **188**. In other words, opening **170** of bone positioning guide **150** may have a different cross-sectional size and/or shape than the cross-sectional size and/or shape of joint spacer **188**. In these configurations, bone preparation guide **150** may actuate or rotate about an axis extending through the length of joint spacer **188**. As a result, after the clinician places bone preparation guide **150** over joint spacer **188**, the clinician may rotate bone preparation guide **150** around joint spacer **188** until the guide slots of the bone preparation guide are better aligned with the ends of the bones to be cut (e.g., first metatarsal **210** and medial cuneiform **220**). Depending on the configuration of opening **170** of bone preparation guide **150** and the configuration of joint spacer **188**, the guide may rotate freely (e.g., 360 degrees) around the joint seeker or within a bounded angular range (e.g., from plus 20 degrees to minus 20 degrees from a normal position).

FIG. **35** illustrates one example configuration of a joint spacer **188** that can allow bone preparation guide **150** to rotate around the seeker. As shown in the illustrated example, joint spacer **188** has a proximal portion **370** having a cylindrical cross-section and a distal portion **372** having a rectangular cross-section. A leading edge of the distal portion **372** is insertable into the joint between the first metatarsal **210** and the medial cuneiform **220**. Once bone preparation guide **150** is inserted over joint spacer **188**, body **154** of the guide (FIG. **5**) may be positioned about the proximal portion **370**. This can allow the guide to be rotated around the proximal portion.

In other configurations, opening **170** of bone positioning guide **150** may be size and/or shape indexed to the cross-sectional size and/or shape of joint spacer **188** but still provide relative rotation between the two components. For example, opening **170** may have a circular cross-section sized and shaped to receive proximal portion **370** of joint spacer **188** from FIG. **35**. Because both opening **170** of bone positioning guide **150** and proximal portion **370** of joint spacer **188** have circular cross-sections in such an embodiment, the two components may rotate relative to each other. FIG. **36**A is a perspective view of an example configuration of bone positioning guide **150** having an opening **170** with circular cross-sectional shape. FIG. **36**B is a perspective view of the example bone positioning guide of FIG. **36**A shown with joint spacer **188** from FIG. **35** inserted into the guide.

In embodiments where bone positioning guide **150** can rotate relative to joint spacer **188**, the bone positioning guide and/or joint spacer may include a locking mechanism that is engageable to lock the rotational angle of the bone positioning guide relative to the joint spacer. For example, bone positioning guide **150** may include a set screw with thumb wheel that can be rotated, causing a distal end of the set screw to bear against or retract away from joint spacer **188**. In use, a clinician can rotate bone preparation guide **150** around joint spacer **188** until the guide slots of the bone preparation guide are best aligned with the ends of the bones to be cut (e.g., first metatarsal **210** and medial cuneiform **220**). The clinician can then engage the locking mechanism to prevent further rotation of bone preparation guide **150** relative to joint spacer **188** before performing further steps of the procedure.

Embodiments of the invention also include a disposable, sterile kit that includes an embodiment of a bone positioning guide and/or preparation guide described herein. Other components that may be included within the sterile kit include bone fixation devices.

Thus, embodiments of the invention are disclosed. Although the present invention has been described with reference to certain disclosed embodiments, the disclosed embodiments are presented for purposes of illustration, and not limitation, and other embodiments of the invention are possible. One skilled in the art will appreciate that various changes, adaptations, and modifications may be made without departing from the spirit of the invention.

The invention claimed is:

1. A bone positioning guide comprising:

a bone engagement member;

a tip;

a mechanism configured to urge the bone engagement member and the tip towards each other; and

an actuator configured to actuate the mechanism, wherein actuating the mechanism is configured to cause a first bone engaged with the bone engagement member to move to correct an alignment of the first bone in more than one plane with respect to a second bone in contact with the tip, including about an axis in a frontal plane.

2. The bone positioning guide of claim **1**, wherein

the mechanism comprises a main body and a shaft movably connected to the main body proximate a first end of the main body;

the bone engagement member is rotatably coupled to the shaft; and

the tip is at a second end of the main body opposite the first end.

3. The bone positioning guide of claim **2**, wherein the first end of the main body is laterally offset from an axis extending through the shaft and a geometric center of the bone engagement member.

4. The bone positioning guide of claim **2**, wherein the actuator is a knob coupled to the shaft.

5. The bone positioning guide of claim **2**, wherein the shaft is threaded.

6. The bone positioning guide of claim **2**, wherein the shaft includes a cannulation.

7. The bone positioning guide of claim **1**, wherein the tip includes a textured surface.

8. The bone positioning guide of claim **1**, wherein the tip is tapered.

9. The bone positioning guide of claim **1**, wherein the tip further includes a stop to limit a depth of insertion.

10. The bone positioning guide of claim **1**, wherein the tip is nonlinear.

11. The bone positioning guide of claim **1**, wherein the bone engagement member has a concave surface configured to engage the bone.

12. The bone positioning guide of claim **11**, wherein the concave surface is V-shaped.

13. The bone positioning guide of claim **11**, wherein the concave surface is formed by a pair of sidewalls, and the pair of sidewalls are asymmetric with respect to each other.

14. The bone positioning guide of claim **1**, wherein the bone engagement member is configured to engage with a medial ridge of a first metatarsal of a human foot.

15. The bone positioning guide of claim **1**, wherein the bone positioning guide is fabricated from radiolucent material.

16. The bone positioning guide of claim **1**, wherein the bone engagement member is laterally offset from the tip.

* * * * *