Filed on behalf of: Cellco Partnership d/b/a Verizon Wireless

UNITED STATES PATENT AND TRADEMARK OFFICE

BEFORE THE PATENT TRIAL AND APPEAL BOARD

CELLCO PARTNERSHIP D/B/A VERIZON WIRELESS,
Petitioner,

v.

FRACTUS, S.A.,
Patent Owner.

Case No. IPR2026-00196
Patent No. 11,031,677

PETITION FOR *INTER PARTES* REVIEW
OF U.S. PATENT NO. 11,031,677

TABLE OF CONTENTS

I. INTRODUCTION 1

II. STANDING CERTIFICATION 4

III. UNPATENTABILITY GROUNDS 4

IV. '677 PATENT 6

A. POSA 11

B. Prosecution History 12

C. Challenged Claims 12

V. CLAIM INTERPRETATION 13

A. "*perimeter*" (all claims) 13

B. "*antenna box*" (claims 6-20) 14

C. "*antenna rectangle*" (claims 6-20) 15

D. "*antenna contour*" (all claims) 15

E. "*complexity factor,*" "F_{21}," "F_{32}" (all claims) 17

1. Grids 18

a. Second Grid G_2 18

b. First Grid G_1 19

c. Third Grid G_3 23

2. Calculation 23

a. "F_{21}" 24

b. "F_{32}" 26

3. Fractus's ADT Litigation argument 27

F. "*wireless device*" (all claims) 27

G. "*4G communication standard*" terms (claims 1-5, 12-20) 28

1. Intrinsic evidence 29

2. Fractus's Litigation Arguments 30

VI. GROUND 1: DOU+CIAIS-QUADBAND RENDERS OBVIOUS CLAIMS 1-9 32

A. Dou (EX1013) 32

B. Ciais-Quadband (EX1009) 33
C. Dou+Ciais-Quadband 33
D. Claim 1 37
1. Preamble [1.PRE] 37
2. Limitation [1.a] 37
3. Limitation [1.b] 37
4. Limitation [1.c] 38
5. Limitation [1.d] 42
6. Limitation [1.e] 45
7. Limitation [1.f] 50
a. Calculating F_{21} 50
i. Grid G_2 50
ii. $N_2 = 47$ 52
iii. Grid G_1 53
iv. $N_1 = 19$ 54
v. Calculation $F_{21} = 1.31$ 54
b. Calculating F_{32} 55
i. Grid G_3 55
ii. $N_3 = 140$ 56
iii. Calculation $F_{32} = 1.57$ 57
8. Limitation [1.g] 57
a. Case 1: "*second antenna*" is Dou GPS 57
b. Case 2: "*second antenna*" is Dou WiFi/Bluetooth 58
9. Limitation [1.h] 58
E. Claim 2 60
F. Claim 3 61
G. Claim 4 61
H. Claim 5 62
I. Claim 6 63

1. Preamble [6.PRE], [6.a]-[6.f] 63
2. Limitation [6.g] 63
3. Limitation [6.h] 63
4. Limitation [6.i] 64
5. Limitation [6.j] 65
6. Limitation [6.k] 66
J. Claims 7-8 67
K. Claim 9 68
VII. GROUND 2: DOU+CIAIS-QUADBAND+NAKANO RENDERS OBVIOUS CLAIMS 1-20 68
A. References 68
1. Nakano (EX1012) 68
2. Dou+Ciais-Quadband+Nakano 68
B. Claims 1-5 71
C. Claims 6-9 71
D. Claim 10 71
E. Claim 11 72
1. Limitation [11.a] 72
2. Limitation [11.b] 73
a. Calculating F_{21} 73
i. Grid G_2 73
ii. $N_2 = 45$ 75
iii. Grid G_1 76
iv. $N_1 = 16$ 76
v. Calculation $F_{21} = 1.49$ 76
b. Calculating F_{32} 77
i. Grid G_3 77
ii. $N_3 = 124$ 77
iii. Calculation $F_{32} = 1.46$ 78

F. Claim 12 78
1. Preamble [12.PRE], Limitations [12.a]-[12.b], [12.d]-[12.f] 78
2. Limitation [12.c] 79
3. Limitation [12.g] 79
4. Limitation [12.h] 80
5. Limitation [12.i] 80
6. Limitation [12.j] 81
7. Limitation [12.k] 82
G. Claims 13-14 82
H. Claim 15 83
I. Claim 16 85
J. Claim 17 85
K. Claim 18 86
L. Claim 19 86
M. Claim 20 87
VIII. GROUND 3: BALIARDA-543 ANTICIPATES AND/OR RENDERS OBVIOUS CLAIMS 1-5 AND 12-20 88
A. Claims 1-5 and 12-20 Are Not Entitled To Priority Before April 7, 2014. 88
B. Analysis 96
IX. *SOTERA* 99
X. DISCRETIONARY DENIAL IS UNWARRANTED 99
XI. CONCLUSION 100
APPENDIX A: U.S. PATENT NO. 11,031,677 CLAIM LIST 101

TABLE OF AUTHORITIES

CASES

10X Genomics v. Bio-Rad Labs.,
IPR2020-00086, Paper 8 (April 27, 2020) 28

Ariad Pharms., Inc. v. Eli Lilly & Co.,
598 F.3d 1336 (Fed. Cir. 2010) (en banc) 89, 95

Arthrex, Inc. v. Smith & Nephew, Inc.,
35 F.4th 1328 (Fed. Cir. 2022) 89, 94

Chester v. Miller,
906 F.2d 1574 (Fed. Cir. 1990) 97

Google LLC v. Valtrus Innovations Ltd.,
IPR2022-01406, Paper 40 (Apr. 3, 2024) 90

ICU Medical, Inc. v. Alaris Med. Sys., Inc.,
558 F.3d 1368 (Fed. Cir. 2009) 90, 94

KSR Int'l Co. v. Teleflex Inc.,
550 U.S. 398 (2007) 35

Nidec Motor Corp. v. Zhongshan Broad Ocean Motor Co.,
868 F.3d 1013 (Fed. Cir. 2017) 13, 28, 29

Phil-Insul Corp. v. Airlite Plastics Co.,
854 F.3d 1344 (Fed. Cir. 2017) 14

Phillips v. AWH Corp.,
415 F.3d 1303 (Fed. Cir. 2005) (en banc) ..... passim

Regents of the Univ. of Cal. v. Broad Inst., Inc.,
No. 22-1653, slip op. (Fed. Cir. May 12, 2025) 89

Rivera v. Int'l Trade Comm'n,
857 F.3d 1315 (Fed. Cir. 2017) 90, 94

Smith & Nephew, Inc. v. Arthrex, Inc.,
IPR2017-00275, Paper 36 (May 2, 2018) 94

Sotera Wireless, Inc. v. Masimo Corp.,
IPR2020-01019, Paper 12 (Dec. 1, 2020) (precedential as to §II.A) 99

STATUTES

35 U.S.C. §102 4

35 U.S.C. §102(a)(1) 5, 6, 97

35 U.S.C. §102 (2012) 6

35 U.S.C. §102(a) (2012) 5

35 U.S.C. §102(b) (2012) 5

35 U.S.C. §102(e) (2012) 5

35 U.S.C. §103 4

35 U.S.C. §103 (2012) 4

35 U.S.C. §282(b) 13

Leahy-Smith America Invents Act, Pub. L. No. 112-29, §3(n)(1)(A), 125 Stat. 284, 293 (Sep. 16, 2011) 4

REGULATIONS

37 C.F.R. §42.100(b) 13

37 C.F.R. §42.104(a) 4

37 C.F.R. §42.104(b)(3) 28

OTHER AUTHORITIES

C. Stewart, Interim Processes for PTAB Workload Management (Mar. 26, 2025) 101

Examination Guidelines for Implementing the First Inventor To File Provisions of the Leahy-Smith America Invents Act, 78 Fed. Reg. 11059, 11083 (Feb. 14, 2013) 4

PTAB FAQs for Interim Processes for PTAB Workload Management, available at https://www.uspto.gov/patents/ptab/faqs/interim-processes-workload-management (visited May 28, 2025) 101

MANUAL OF PATENT EXAMINING PROCEDURE

United States Patent and Trademark Office, Manual of Patent Examining Procedure §2159.02 (9th ed., rev. Nov. 2024 [R-01.2024])..... 5

EXHIBIT LIST

Exhibit	Description
1001	U.S. Patent No. 11,031,677
1002	Prosecution History of U.S. Patent No. 11,031,677
1003	U.S. Patent No. 11,349,200
1004	Prosecution History of U.S. Patent No. 11,349,200
1005	U.S. Patent No. 12,095,149
1006	Prosecution History of U.S. Patent No. 12,095,149
1007	Declaration of Daniel van der Weide, Ph.D.
1008	Curriculum Vitae of Daniel van der Weide, Ph.D.
1009	P. Ciais, R. Staraj, G. Kossiavas, and C. Luxey. "Design of an Internal Quad-Band Antenna for Mobile Phones," *IEEE Microwave and Wireless Components Letters*, vol. 14, no. 4, pp. 148-150, April 2004 ("Ciais-Quadband").
1010	P. Ciais, R. Staraj, G. Kossiavas, and C. Luxey. "Compact Internal Multiband Antenna for Mobile Phone and WLAN Standards," *Electronics Letters*, vol. 40, no. 15, pp. 920-921, July 2004 ("Ciais-Multiband")
1011	X. Jing, Z. Du, and K. Gong. "Compact Planar Monopole Antenna for Multi-band Mobile Phones," in *2005 Asia-Pacific Microwave Conference Proceedings*, vol. 4, pp. 2657-2660, IEEE, 2005 ("Jing").
1012	H. Nakano, Y. Sato, H. Mimaki and J. Yamauchi. "An Inverted FL Antenna for Dual-Frequency Operation," *IEEE Transactions on Antennas and Propagation*, vol. 53, no. 8, pp. 2417-2421, Aug. 2005 ("Nakano")
1013	U.S. Patent App. Pub. No. 2007/0200773 ("Dou")
1014	Declaration of James L. Mullins, Ph.D.

Exhibit	Description
1015	Curriculum Vitae of James L. Mullins, Ph.D.
1016	Plaintiff's Disclosure of Asserted Claims and Infringement Contentions Against Geotab Pursuant to Local Patent Rules 3-1 and 3-2, *Fractus, S.A., v. Geotab Inc.*, No. 2:24-cv-01008 (E.D. Tex.), served March 12, 2025
1017	D.I. 75, Fractus's Opening Claim Construction Brief, *Fractus, S.A. v. ADT LLC*, No. 2:22-cv-00412 (E.D. Tex. Nov. 16, 2023)
1018	D.I. 75-1, Exhibit 1 to D.I. 75, Fractus's Opening Claim Construction Brief, *Fractus, S.A. v. ADT LLC*, No. 2:22-cv-00412 (E.D. Tex. Nov. 16, 2023)
1019	D.I. 92, Joint Claim Construction Chart, *Fractus, S.A. v. ADT LLC*, No. 2:22-cv-00412 (E.D. Tex. Jan. 4, 2024)
1020	D.I. 115, Claim Construction Order, *Fractus, S.A. v. ADT LLC*, No. 2:22-cv-00412 (E.D. Tex. Feb. 25, 2024) (Payne, M.J.)
1021	D.I. 127, Order, *Fractus, S.A. v. ADT LLC*, No. 2:22-cv-00412 (E.D. Tex. Mar. 15, 2024) (Gilstrap, D.J.)
1022	D.I. 82, Defendants ADT LLC and Vivint, Inc.'s Responsive Claim Construction Brief, *Fractus, S.A. v. ADT LLC*, No. 2:22-cv-00412 (E.D. Tex. Dec. 14, 2023)
1023	D.I. 253, Order, Fractus, S.A. v. ADT LLC, No. 2:22-cv-00412 (E.D. Tex. Oct. 4, 2024) (Gilstrap, D.J.)
1024	D.I. 1, Complaint, *Fractus, S.A., v. Geotab Inc.*, No. 2:24-cv-01008 (E.D. Tex. Dec. 6, 2024)
1025	3GPP TS 36.101 v8.4.0 (2008-12) Technical Specification: 3rd Generation Partnership Project; Technical Specification Group Radio Access Network; Evolved Universal Terrestrial Radio Access (E-UTRA); User Equipment (UE) radio transmission and reception (Release 8), 2008

Exhibit	Description
1026	Ericsson white paper, "LTE—an introduction," no. 284 23-3124 Uen Rev B (June 2009)
1027	Declaration of Gordon MacPherson
1028	'677 patent Claim Limitation Comparison Chart
1029	U.S. Patent Publication No. 2006/0214857 ("Ollikainen")
1030	ETSI TS 145 005 V4.3.0 (2001-14) Technical Specification: Digital cellular telecommunications system (Phase 2+); Radio transmission and reception (3GPP TS 45.005 version 4.3.0 Release 4)
1031	ZigBee Specification (Jun. 27, 2005)
1032	ETSI TS 125 308 V6.2.0 (2004-09) Technical Specification: Universal Mobile Telecommunications System (UMTS); UTRA High Speed Downlink Packet Access (HSDPA); Overall description; Stage 2 (3GPP TS 25.308 version 6.2.0 Release 6)
1033	ETSI TS 125 101 V6.5.0 (2004-09) Technical Specification: Universal Mobile Telecommunications System (UMTS); User Equipment (UE) radio transmission and reception (FDD) (3GPP TS 25.101 version 6.5.0 Release 6)
1034	ETSI TS 125 102 V6.0.0 (2003-12) Technical Specification: Universal Mobile Telecommunications System (UMTS); User Equipment (UE) radio transmission and reception (TDD) (3GPP TS 25.102 version 6.0.0 Release 6)
1035	ETSI TS 121 101 V6.0.0 (2004-12) Technical Specification: Universal Mobile Telecommunications System (UMTS); Technical Specifications and Technical Reports for a UTRAN-based 3GPP system (3GPP TS 21.101 version 6.0.0 Release 6)
1036	3GPP TR 23.882 V1.2.3 (2006-06) Technical Report: 3rd Generation Partnership Project; Technical Specification Group Services and System Aspects; 3GPP System Architecture Evolution: Report on Technical Options and Conclusions (Release 7)

Exhibit	Description
1037	3GPP TR 23.882 V1.6.1 (2006-11) Technical Report: 3rd Generation Partnership Project; Technical Specification Group Services and System Aspects; 3GPP System Architecture Evolution: Report on Technical Options and Conclusions (Release 7)
1038	3GPP TR 23.882 V1.8.0 (2007-02) Technical Report: 3rd Generation Partnership Project; Technical Specification Group Services and System Aspects; 3GPP System Architecture Evolution: Report on Technical Options and Conclusions (Release 7)
1039	pages from E. Dahlman et al., *3G Evolution: HSPA and LTE for Mobile Broadband* (Academic Press 2d ed. 2008)
1040	U.S. Patent Publication No. 2008/0018543 (Baliarda-543)
1041	U.S. Department of State, *United States Delegation Report: World Radiotelecomunications Conference 2007* (2007), available at https://2001-2009.state.gov/documents/organization/108955.pdf (visited May 19, 2025)
1042	IEEE Std. 802.11a-1999, Supplement to the IEEE Standard for Information Technology—Telecommunications and information exchange between systems—Local and metropolitan area networks—Specific requirements— Part 11: Wireless LAN Medium Access Control (MAC) and Physical Layer (PHY) specifications: High-speed Physical Layer in the 5 GHz Band (Dec. 30, 1999)
1043	IEEE Std. 802.11b-1999, Supplement to the IEEE Standard for Information Technology—Telecommunications and information exchange between systems—Local and metropolitan area networks—Specific requirements— Part 11: Wireless LAN Medium Access Control (MAC) and Physical Layer (PHY) specifications: Higher-Speed Physical Layer Extension in the 2.4 GHz Band (Jan. 20, 2000)
1044	Specification of the Bluetooth System version 2.0, volume 2 (issued Nov. 4, 2004)

Exhibit	Description
1045	Second Report and Order, *In re Service Rules for the 698-746, 747-762 and 777-792 MHz Bands (WT Docket No. 06-150); Revision of the Commission's Rules to Ensure Compatibility with Enhanced 911 Emergency Calling Systems (CC Docket No. 94-102); Section 68.4(a) of the Commission's Rules Governing Hearing Aid-Compatible Telephones (WT Docket No. 01-309); Biennial Regulatory Review–Amendment of Parts 1, 22, 24, 27, and 90 to Streamline and Harmonize Various Rules Affecting Wireless Radio Services (WT Docket No. 03-264); Former Nextel Communications, Inc. Upper 700 MHz Guard Band Licenses and Revisions to Part 27 of the Commission's Rules (WT Docket No. 06-169); Implementing a Nationwide, Broadband, Interoperable Public Safety Network in the 700 MHz Band (PS Docket No. 06-229); Development of Operational, Technical and Spectrum Requirements for Meeting Federal, State and Local Public Safety Communications Requirements Through the Year 2010 (WT Docket No. 96-86); Declaratory Ruling on Reporting Requirement under Commission's Part 1 Anti-Collusion Rule (WT Docket No. 07-166)*, FCC 07-132 (Jul. 31, 2007), available at https://docs.fcc.gov/public/attachments/FCC-07-132A1.pdf (visited May 21, 2025)
1046	ITU, Report ITU-R M.2134-0: Requirements related to technical performance for IMT-Advanced radio interface(s) (2008), *available at* https://www.itu.int/pub/R-REP-M.2134-2008/en (visited May 22, 2025)
1047[1]	Chart 45 to EX1016

[1] EX1047 and EX1048 were filed under seal in *Geotab Inc. v. Fractus, S.A.*, IPR2025-01026, so Petitioner does not have a copy of this document to file with the present petition. However, Geotab, Patent Owner Fractus, and the Board each have a copy of this document which was supplied with the petition in *Geotab Inc.*

Exhibit	Description
1048	Chart 44 to EX1016

v. Fractus, S.A., IPR2025-01026. Moreover, as the Board denied Geotab's motion to seal (IPR2025-01026, Paper 20 at 70-73), Petitioner expects these exhibits to become publicly accessible in the joined IPR.

ABBREVIATIONS

Abbreviation	Description
3GPP	3rd Generation Partnership Project
DCS	Digital Communication Service
DL	downlink
ETSI	European Telecommunication Standards Institute
E-UTRAN	Evolved Universal Terrestrial Radio Access Network
FDD	frequency division duplexing
GPS	Global Positioning System
GSM	Global System for Mobile Communications
HSDPA	High Speed Downlink Packet Access
HSPA	High Speed Packet Access
HSUPA	High Speed Uplink Packet Access
ISM	Industrial, Scientific, and Medical
ITU	International Telecommunication Union
LTE	Long Term Evolution
NAMPS	Narrowband Advanced Mobile Phone Service
PCB	printed circuit board
PCS	Personal Communication Service
PDA	personal digital assistant
PIFA	planar inverted-F antenna
TDD	time division duplexing

Abbreviation	Description
UL	uplink
UMTS	Universal Mobile Telecommunications System
UTRAN	UMTS Terrestrial Radio Access Network
UWB	ultra-wideband
VSWR	voltage standing wave ratio
WCDMA	Wideband Code Division Multiple Access
WiBro	Wireless Broadband
WiMax	Worldwide Interoperability for Microwave Access
WLAN	wideband local area network
WRC	World Radiocommunication Conference

MANDATORY NOTICES

A. Real Parties-In-Interest

The real party in interest is Cellco Partnership d/b/a Verizon Wireless. Additionally, out of an abundance of caution, Petitioner further identifies Verizon Connect Inc., Verizon Communications Inc., and Verizon Corporate Resources Group LLC as real parties-in-interest for the IPR requested by this Petition, solely to the extent that Patent Owner contends that these separate legal entities should be named real parties-in-interest in the requested IPR, and Petitioner does so to avoid the potential expenditure of resources to resolve such a challenge. No unnamed entity is funding, controlling, or otherwise has an opportunity to control or direct this Petition or Petitioner's participation in any resulting IPR. Also, Petitioner notes that Petitioner has several hundred affiliated entities and each of these entities agrees to be estopped under the provisions of 35 U.S.C. § 315 as a result of any final written decision in the requested IPR to the same extent that Petitioner is estopped.

B. Related Matters

A decision in this proceeding could affect, or be affected by, the following:

1. United States Patent & Trademark Office

U.S. Patent No. 11,031,677 ("the '677 patent") issued from Application No. 16/832,820, which is a continuation of Application No. 15/856,626 filed December

28, 2017 (issued as U.S. Patent No. 10,644,380), which is a continuation of Application No. 14/738,090 filed June 12, 2015 (issued as U.S. Patent No. 9,899,727), which is a continuation of Application No. 14/246,491 filed April 7, 2014 (issued as U.S. Patent No. 9,099,773), which is a continuation of Application No. 11/614,429 filed December 21, 2006 (issued as U.S. Patent No. 8,738,103), which claims priority from Provisional Application No. 60/856,410 filed November 3, 2006 and Provisional Application No. 60/831,544 filed July 18, 2006.

The following applications are continuations of Application No. 16/832,820, which issued as U.S. Patent No. 11,031,677:

- U.S. Patent Application No. 17/246,192, which issued as U.S. Patent No. 11,349,200 ("the '200 patent");
- U.S. Patent Application No. 17/704,942, which issued as U.S. Patent No. 11,735,810;
- U.S. Patent Application No. 18/339,523, which issued on September 18, 2024 as U.S. Patent No. 12,095,149 ("the '149 patent");
- U.S. Patent Reexamination No. 90/019,275 filed October 12, 2023; and
- U.S. Patent Application No. 18/782,669 filed July 24, 2024.

2. United States Patent Trial and Appeal Board

a. '677 patent

The ’677 patent is being challenged in IPR2025-01026 (*Geotab Inc. et al. v. Fractus, S.A.*; “Geotab ’677 IPR”), filed by petitioners Geotab Inc. and Geotab USA, Inc. (collectively, “Geotab”). Petitioner seeks joinder with the Geotab ’677 IPR, as set forth in Petitioner’s Motion for Joinder filed herewith.

b. Related patents

U.S. Patent No. 11,349,200, which issued from a continuation of the ’677 patent, is the subject of pending IPR2025-01027, which Geotab filed contemporaneously with the Geotab ’677 IPR petition.

U.S. Patent No. 11,349,200 was challenged in *Vivint, Inc. v. Fractus, S.A.*, IPR2024-00088, which settled and was terminated before Fractus filed a preliminary patent owner response and before institution decision. IPR2024-00088, Paper 14 (Feb. 20, 2024).

The ’677 patent is a continuation of U.S. Patent No. 8,738,103. The ’103 patent was challenged in *Vivint, Inc. v. Fractus, S.A.*, IPR2024-00087, which settled and was terminated before Fractus filed a preliminary patent owner response and before institution decision. IPR2024-00087, Paper 14 (Feb. 20, 2024).

3. U.S. District Court for the Eastern District of Texas

a. ’677 patent

The ’677 patent is currently asserted in (i) *Fractus, S.A. v. Geotab Inc.*, No. 2:24-cv-01008 (E.D. Tex.) (“the Geotab Litigation”), (ii) *Fractus, S.A. v. Verizon Connect Inc. et al.*, No. 2:24-cv-01009 (E.D. Tex.) (“the Verizon Litigation”), and (iii) *Fractus, S.A. v. ResMed Inc. et al.*, No. 3:25-cv-02680 (S.D. Cal.) (“the ResMed Litigation”). The Geotab Litigation is consolidated with the Verizon Litigation in No. 2:24-cv-01009. The ’677 patent has not previously been asserted.

b. Related patents

U.S. Patent Nos. 8,738,103 (a parent to the ’677 patent) and 11,349,200 (which issued from a continuation of the ’677 patent) were asserted in these actions:

(i) *Fractus, S.A. v. ADT LLC*, No. 2:22-cv-00412 (E.D. Tex.) (“ADT Litigation”), which was dismissed with prejudice on October 4, 2024 (D.I. 253).

(ii) *Fractus, S.A. v. Vivint, Inc.*, No. 2:22-cv-00413 (E.D. Tex.) (“Vivint Litigation”), which was dismissed with prejudice on February 20, 2024 (D.I. 22).

U.S. Patent No. 11,349,200 is asserted in the Geotab Litigation.

U.S. Patent No. 12,095,149 (which issued from, *inter alia*, a continuation of the ’677 patent) is asserted in both the Geotab and Verizon Litigations.

4. Counsel and Service Information - §§42.8(b)(3) and (4)

Petitioner designates the following counsel:

Lead Counsel	Backup Counsel
Justin J. Oliver Reg. No. 44,986 VENABLE LLP 600 Massachusetts Avenue, NW Washington, D.C. 20001 Telephone: 202-721-5423 Facsimile: 202-344-8300 JOliver@Venable.com	Stephen K. Yam Reg. No. 64,927 VENABLE LLP 600 Massachusetts Avenue, NW Washington, D.C. 20001 Telephone: 202-721-5429 Facsimile: 202-344-8300 SYam@Venable.com

Service information for lead and backup counsel is provided in the designation of lead and backup counsel, above. Petitioner consents to electronic service by email at VerizonIPR@venable.com and lead/backup counsel's email addresses provided above.

Pursuant to 37 C.F.R. § 42.10(b), a Power of Attorney from Petitioner is attached.

Cellco Partnership d/b/a Verizon Wireless ("Verizon" or "Petitioner") requests *inter partes* review and cancellation of claims 1-20 (the "Challenged Claims") of U.S. Patent No. 11,031,677 (EX1001, "the '677 patent").

I. INTRODUCTION

The '677 patent concerns antennas in wireless devices like mobile phones. The alleged "invention" purports to "provide antenna design parameters that tend to optimize the efficiency of" such antennas. EX1001, 5:14-17. The claims recite design parameters called "complexity factors"—a term coined by the inventors—that purport to characterize the "complexity" of an antenna's three-dimensional shape.[2] According to the specification, an antenna designer should ensure that a designed antenna has "complexity factors" within certain ranges because that will ensure that the antenna is "optimized."

Even if there were something inventive about this design methodology (which Petitioner does not concede), that is not what the '677 patent claims. Instead, every claim concerns a wireless device with an antenna that meets the claimed complexity factors, regardless of whether a designer used those factors during an "antenna system" design process. The '677 patent does not allege that

[2] The "complexity factors" are determined by mathematical calculation using a methodology described in the '677 patent and explained in detail below.

the inventors were the first to ever design an antenna having "complexity factor" values that fall within the claims. They indisputably were not, as demonstrated by the antennas disclosed in the Ciais-Quadband (Grounds 1 and 2) and Nakano (Ground 2) references used in the grounds.

That the Examiner failed to appreciate that antennas were known that met the claimed complexity factors is unsurprising. Given that "complexity factor" was a term coined by the inventors, the Examiner could not have found in any reference describing an antenna an explanation of what the antenna's "complexity factor" values were. And as will become clear from the explanation below, applying the '677 patent's prescribed approach for calculating the complexity factor values—for even a single antenna—is a time consuming process.

Compounding the problem, the applicant overwhelmed the Examiner with volume. The '677 patent lists ***1910*** cited references (spanning 27 pages). The record does not reflect that the Examiner calculated the complexity factor values for even a single one of the antennas disclosed in the almost 2000 cited references. The claims issued without the Examiner rejecting a single claim over the prior art or discussing a single one of the cited references. The ***only*** rejections were for double-patenting over parent cases, which the applicant cured by terminal disclaimer.

The claims are demonstrably unpatentable. Before the earliest possible priority date, Dou described a wireless device (e.g., a mobile phone) with multiple internal antennas and stated that any suitable antenna design could be used for those antennas. Ciais and Nakano each described just such a "suitable" antenna for a mobile device, and the Ciais and Nakano antennas meet the claimed complexity factors. **Ground 1** shows that Dou implemented with Ciais's quadband antenna renders obvious claims 1-9. **Ground 2** shows that Dou implemented with Nakano's antenna, in addition to Ciais's antenna, renders obvious claims 1-20.

Moreover, claims 1-5 and 12-20 are not entitled to an effective-filing date before April 2014—the filing date of a ***second*** non-provisional application in the priority chain—because the ***first*** non-provisional application, filed in 2006, provides no written description supporting the full scope of an antenna operating at frequencies and sending/receiving signals associated with a "*4G communication standard*" genus. That makes Baliarda-543—the 2008 publication of the first non-provisional application—prior art to claims 1-5 and 12-20. Baliarda-543's disclosure comes ***within*** the challenged claim scope, even though it does not support ***the full scope*** of the claims. **Ground 3** shows that Baliarda-543 anticipates and/or renders obvious claims 1-5 and 12-20.

The Board should institute IPR and cancel claims 1-20.

II. STANDING CERTIFICATION

The ’677 patent is available for IPR. Petitioner is neither barred nor estopped from requesting IPR of the ’677 patent. In this regard, as this Petition is accompanied by a Motion for Joinder, the time limit under 37 C.F.R. § 42.101(b) and 35 U.S.C. § 315(b) does not apply.

III. UNPATENTABILITY GROUNDS

Petitioner requests cancellation of the following claims as follows.

Ground	Reference(s)	Claims	Basis
1	Dou, Ciais-Quadband[3]	1-9	§103
2	Dou, Ciais-Quadband, Nakano	1-20	§103
3	Baliarda-543	1-5, 12-20	§§102/103

The AIA applies to ***all*** claims because, as explained *infra* §VIII.A, the ’677 patent contains at least one claim that is not entitled to an effective filing date before March 16, 2013. AIA,[4] Pub. L. 112-29, §3(n)(1)(A), 125 Stat. 284, 293 (Sep. 16, 2011); Examination Guidelines, 78 Fed. Reg. 11059, 11083 (Feb. 14, 2013) (“If there is ever even a single claim to a claimed invention in the application having an effective filing date on or after March 16, 2013, AIA [§§102,

[3] EX1009 is identified as “Ciais-Quadband” to avoid confusion with a second Ciais paper (EX1010) that describes a different antenna.

[4] Leahy-Smith America Invents Act.

103] apply in determining the patentability of every claimed invention in the application."); MPEP §2159.02. Regardless, even if the AIA does not apply every reference used in **Grounds 1-2** is still prior art to the '677 patent.

Each reference is prior art to the Challenged Claims as follows.

Reference	Priority Date	AIA	pre-AIA
Dou (EX1013)	2006-02-24	§102(a)(1)	§102(e)
Ciais-Quadband (EX1009)	2004-04-04	§102(a)(1)	§§102(a), (b)
Nakano (EX1012)	2005-08-08	§102(a)(1)	§102(a)
Baliarda-543 (EX1040)	2008-01-24	§102(a)(1)	

Ciais-Quadband was published in *IEEE Microwave and Wireless Components Letters*, volume 14, no. 4, dated April 2004, published May 4, 2004 on IEEE Explore. EX1009, 148; EX1027, ¶¶6-9, 12-13, p. 8; EX1014, ¶¶33-44. Ciais-Quadband is pre-AIA §102(b) prior art to every Challenged Claim because it published before July 18, 2005. EX1014, ¶¶57, 33-57, Attachment A-1.

Nakano was published in *IEEE Transactions on Antennas and Propagation*, volume 53, no. 8, dated August 2005. EX1012, 2417; EX1014, ¶¶117-128. It published August 8, 2005 on IEEE Explore (EX1027, ¶¶6-8, 10, 12, 14, p.21), and Linda Hall Library stamped a hard copy received on August 16, 2005. EX1014, ¶¶121-123, Attachment D-1. Nakano was published no later than August 21, 2005 and is pre-AIA §102(a) prior art to every Challenged Claim. EX1014, ¶¶144, 117-144, Attachment D-1.

In litigation, Patent Owner ("Fractus") alleged that claims 1-9 and 12-17 were conceived by June 19, 2006. EX1016, 1-4. Even if every Challenged Claim was conceived by June 19, 2006 and entitled to the '677 patent's earliest-alleged priority date (July 18, 2006), Dou, Ciais-Quadband, and Nakano are prior art under the foregoing pre-AIA §102 sub-sections. **Grounds 1 and 2** show that the Challenged Claims are unpatentable ***regardless*** of whether the AIA or pre-AIA law applies.

Ground 3 shows that claims 1-5 and 12-20 are not entitled to priority before April 7, 2014. Under that analysis (*infra* §VIII.A), Baliarda-543 (EX1040)—published before April 7, 2013—is AIA §102(a)(1) prior art that renders claims 1-5 and 12-20 unpatentable as anticipated and/or obvious.

IV. '677 PATENT[5]

The '677 patent concerns a "multifunction wireless device" with "smartphone functionality" that has an "antenna system." The antenna system is disposed "within" the device and comprises a "ground plane" and "first" and "second" antennas. The wireless device has multiband antennas (antennas covering multiple frequency ranges associated with communication standards),

[5] All emphasis added unless otherwise indicated.

where the "first" and "second" antennas cover different frequency ranges. EX1001, 9:50-10:28, 25:1-16, 25:47-58.

The wireless device preferably can communicate (has "wireless connectivity") using different communication standards that use frequency bands in different frequency ranges. EX1001, 9:50-10:28, 25:1-16, 25:47-58. Thus, the '677 patent describes a device comprising antennas designed to send and receive electromagnetic signals in frequency ranges used by the frequency bands for various communication standards. EX1001, 12:24-26 ("A structure of [the invention's] antenna system… is able to support different radiation modes."), 13:25-28 ("The resulting antenna structure… includes a plurality of portions that allow the operation of the antenna system in multiple frequency bands.").

The patent asserts that the antenna system's design "is intended to use efficiently as much of the volume" within a defined space "to obtain a superior RF performance… in at least one frequency band." EX1001, 13:58-63. The patent refers to the resulting antenna structure's "geometrical complexity" (EX1001, 13:67-14:10) and characterizes an antenna design's "level of complexity" in terms of "complexity factor"—which the specification defines as a mathematical calculation based on antenna dimensions using specific analytic steps, as explained *infra* §V.E (claim construction).

The patent asserts,

> In accordance with embodiments of the invention, ***the level of complexity of an antenna contour can be advantageously parameterized by means of two complexity factors***, hereinafter referred to as F_{21} and F_{32}, which capture and characterize certain aspects of the geometrical details of the antenna contour (such as for instance its edge-richness, angle-richness and/or discontinuity-richness) when viewed at different levels of scale.

EX1001, 16:54-61. The "[c]omplexity factor F_{21} is predominantly characterized by capturing the complexity and degree of convolution of features of the antenna contour that appear when the contour is viewed at coarser levels of scale," (EX1001, 19:15-18), whereas "[c]omplexity factor F_{32} is predominantly characterized by capturing the complexity and degree of convolution of features of the antenna contour that appear when the contour is viewed at finer levels of scale" (EX1001, 20:6-9). In "some embodiments… F_{21} is related to the number of paths that [an antenna system] structure… provides to electric currents… to excite radiation modes…. In general, the more frequency bands and/or radiation modes that need to be supported by the antenna structure… the higher the value of F_{21} that needs to be attained." EX1001, 19:37-46.

The patent suggests that an "antenna contour" with "complexity factor F_{32} larger than a certain minimum value" will "achieve some degree of miniaturization" but may have "reduced capability to operate in multiple frequency bands and/or limited RF performance." EX1001, 20:49-61. The specification

asserts that "effective antenna design" is achieved by specifying antenna complexity factors using any combination of F_{32} values between 1.10 and 1.90 in 0.05 increments, and F_{21} values between 1.05 and 1.80 in 0.05 increments. EX1001, 21:10-12, 20:66-21:14.

The specification shows a single example of an antenna, e.g., an "antenna contour" reflecting a physical antenna layout (Figs. 12A, 17H), with a known frequency response (Fig. 19A) that the patent evaluates for "*complexity factor*" (EX1001, 38:55-40:56).

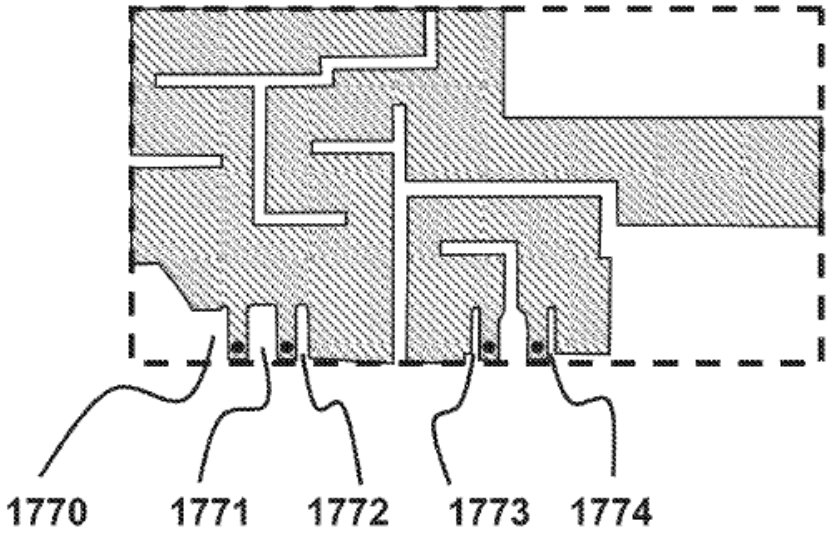

FIG. 17H

This antenna covers—meaning it can send and receive electromagnetic signals at—radio frequencies that are compatible with GSM and UMTS communication standards. EX1001, Fig. 19A, 38:55-39:35, 40:59-41:21. The

operable frequency ranges are determined at a given voltage standing wave ratio (VSWR), a design parameter that measures how well the antenna works with the device electronics (e.g., transceiver) that send and receive electrical signals that the antenna converts to RF radiation. EX1001, 1:67-2:2; EX1007 ("Weide"), ¶¶59, 115-116.

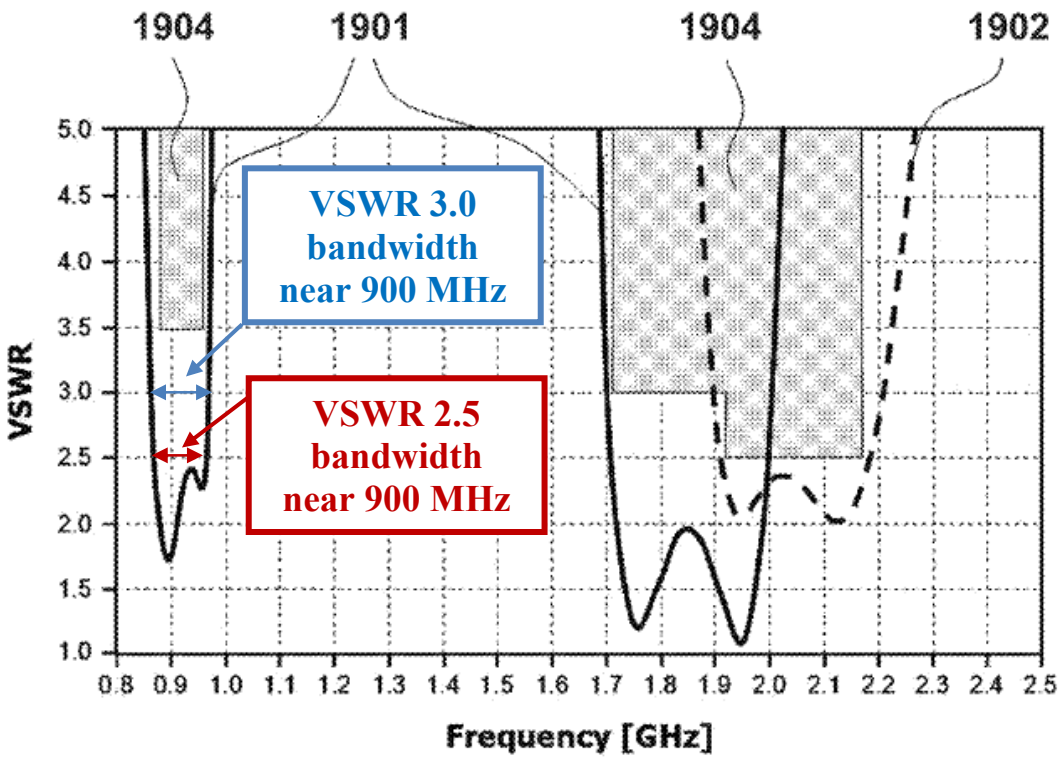

FIG. 19A

A ***lower*** VSWR means ***a better match*** between the antenna and the device electronics (e.g., transceiver), making the system more efficient at radiating energy: VSWR of 1:1 is a perfect match. Weide, ¶60. Figure 19A shows that

lower VSWR is associated with lower antenna bandwidth, illustrating a well-known tradeoff between impedance match (e.g., VSWR) and antenna bandwidth. *Id*. The specification describes "maximum" VSWR values for frequency ranges associated with GSM and UMTS communication standards (EX1001, 37:8-38, Table 1), and Figure 19A shades regions with VSWR above the specification's "maximum" levels at different frequency ranges for different communication standards. EX1001, 40:67-41:6; Weide, ¶61.

While the specification describes "complexity factors" for each step of "progressive modification" of an antenna contour from Figures 17A-17H (EX1001, 38:55-40:58, Table 2), the patent never shows the antenna performance—e.g., frequency response—associated with each "progressive modification" or that antenna's "complexity factors."

A. POSA

For purposes of this Petition, Petitioner adopts Fractus's definition of a person having ordinary skill in the art ("POSA") from the ADT Litigation:

> [A] person with at least a bachelor's degree in electrical engineering, computer science, or a similar degree and at least four years of experience in applied electromagnetics with an emphasis on antennas. Alternatively, the person of ordinary skill in the art would have a master's degree in electrical engineering (or similar discipline) and at least two years of similar experience.

EX1018, 8-9, ¶32; Weide, ¶¶40, 37-52.

B. Prosecution History

Other than separately rejecting all claims for double patenting over U.S. Patent No. 8,738,103 (EX1002, 557-571), U.S. Patent No. 9,099,773 (EX1002, 571-584), U.S. Patent No. 9,899,727 (EX1002, 584-597), and U.S. Patent No. 10,644,380 (EX1002, 597-610), which Fractus cured by terminal disclaimer (EX1002, 882, 892-895), the Examiner allowed the Challenged Claims without rejection or meaningful explanation. EX1002, 958-959. The Examiner provided no substantive discussion of the examined claims.

C. Challenged Claims

The ’677 patent has 20 claims, each concerning a “wireless device.” Appendix A provides a claim list. Claims 1, 6, and 12 are independent.

Claim 1 recites a “*wireless device*” comprising an “*antenna system*” ([1.PRE]-[1.a]). The “*antenna system*” comprises “*a ground plane*” ([1.b]) and a “*first*” ([1.c]) and “*second antenna*” ([1.g]). The “*first antenna*” comprises a “*first antenna contour*” ([1.e]), with “*complexity factor* F_{21}” being “*at least 1.20*” and “*complexity factor* F_{32}” being “*less than 1.75*” ([1.f]). Claims 6 and 12 have similar limitations as claim 1 and add limitations concerning first/second antenna frequency coverage, placement, or shape.

Dependent claims add further limitations concerning a "*third antenna*" and the shape, frequency coverage, placement, and "*complexity factor*" for the various antennas

V. CLAIM INTERPRETATION

Claim terms are construed using the standard for civil actions under 35 U.S.C. §282(b), in accordance with the ordinary and customary meaning as understood by POSAs and the patent's prosecution history. 37 C.F.R. §42.100(b). The Board need only construe claims to the extent needed to resolve disputes between parties. *Nidec Motor Corp. v. Zhongshan Broad Ocean Motor Co.*, 868 F.3d 1013, 1017 (Fed. Cir. 2017). Various terms discussed below require construction. Remaining terms should be given their ordinary meaning to a POSA and are met by the prior art in each Ground under any reasonable construction.

A. "*perimeter*" (all claims)

In the ADT Litigation, the court construed "*perimeter*" in a parent (U.S. Patent No. 8,738,103) and a child (U.S. Patent No. 11,349,200) having the same specification as the '677 patent. EX1020, 1; EX1001, code (63); EX1003, code (63). The court rejected Fractus's proposed construction and construed "*perimeter*" in the patents as: "boundary of an object" ***excluding*** "any notion of 'following the shape of the radiating element and extending it as necessary to complete the boundary'" as Fractus had urged. EX1020, 14-17; EX1021. The

ADT Litigation was dismissed with prejudice. EX1023. That collaterally estops Fractus from arguing a different construction here. *Phil-Insul Corp. v. Airlite Plastics Co.*, 854 F.3d 1344, 1357-1358 (Fed. Cir. 2017). The court's construction of "*perimeter*" comports with the ordinary meaning and the Board should apply it. Weide, ¶¶70-71.

B. "*antenna box*" (claims 6-20)

The '677 patent says that Fig. 1B's element 103 shows an "antenna box," stating:

> An antenna box… ***is herein defined*** as being the minimum-sized parallelepiped of square or rectangular faces that completely encloses the antenna volume of space and wherein each one of the faces of the minimum-sized parallelepiped is tangent to at least one point of the volume. Moreover, each possible pair of faces of the minimum-size parallelepiped shares an edge forming an inner angle of 90°.

EX1001, Fig. 1B, 11:24-38.

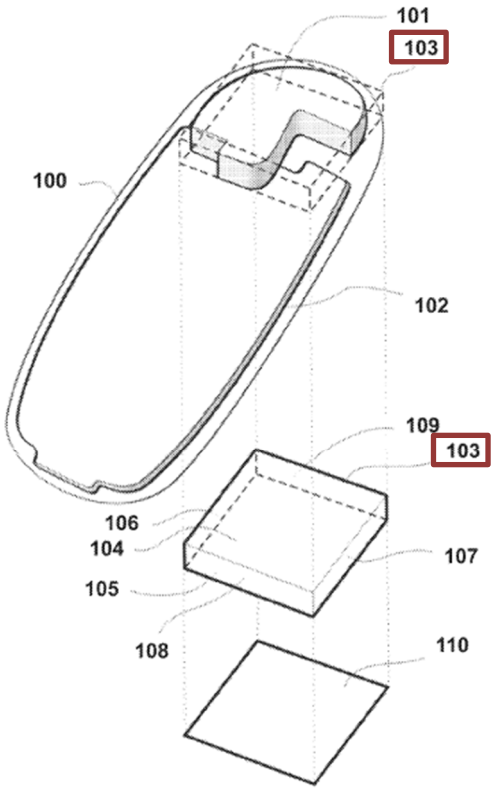

FIG. 1B

This defines "*antenna box*" as used in the claims. *Phillips v. AWH Corp.*, 415 F.3d 1303, 1316 (Fed. Cir. 2005) (en banc) ("specification may reveal a special definition given to a claim term" wherein "the inventor's lexicography governs").

C. "*antenna rectangle*" (claims 6-20)

The '677 patent states that "an antenna rectangle is defined as being the orthogonal projection of the antenna box along the normal to the face with largest area of the antenna box." EX1001, 14:11-14; *Phillips*, 415 F.3d at 1316.

D. "*antenna contour*" (all claims)

The '677 patent says that Figure 3 shows an "*antenna contour*" 350 (blue outline below) for "antenna element 300" within "*antenna rectangle*" 351 (*supra* §V.C) formed from an orthogonal projection through "*antenna box*" 301 (*supra* §V.B). EX1001, Fig. 3 (annotated below), 27:7-10, 27:44-28:4.

The "*antenna contour*" 350 comprises "disjointed subsets of segments" from "*perimeter* 357" (*supra* §V.A), "segments 356 corresponding to the orthogonal projection of part 306," and "segments" 352/353 "associated to the *perimeter* of aperture[s]" 302/303, respectively. EX1001, 27:62-28:4.

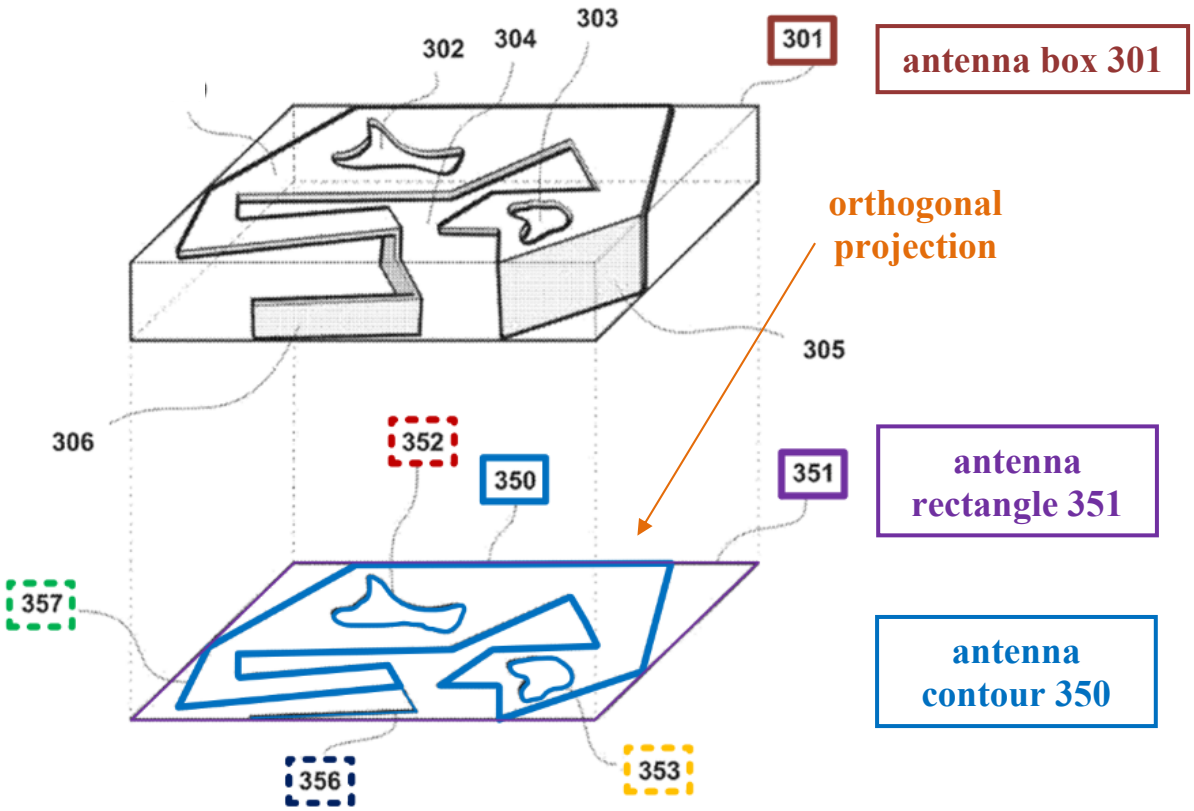

EX1001, Fig. 3 (annotated)

The '677 patent states, "[t]he antenna contour of the antenna system is a set of joined and/or disjointed segments comprising" (with numbering added):

> [1] ***the perimeter*** of one or more antenna elements ***placed in the antenna rectangle***,
>
> [2] ***the perimeter*** of closed slots and/or closed apertures defined within the antenna elements, and/or [3] the ***orthogonal projection onto the antenna rectangle*** of ***perimeters*** of antenna elements, or ***perimeters*** of or parts of antenna elements that are ***placed in the antenna box*** but not in ***the antenna rectangle***.

EX1001, 15:6-27 ("Not all the segments that form the antenna contour need to be connected (i.e., to be joined). In some cases, the antenna contour comprises two,

three, four or more disjointed subsets of segments."); *Phillips*, 415 F.3d at 1316. Figure 3 shows antenna contour 350 comprising each disjointed subset: [1] *perimeter* 357 and projection 356, [2] *perimeter* 352, and [3] *perimeter* 353. EX1001, Fig. 3 (annotated detail below).

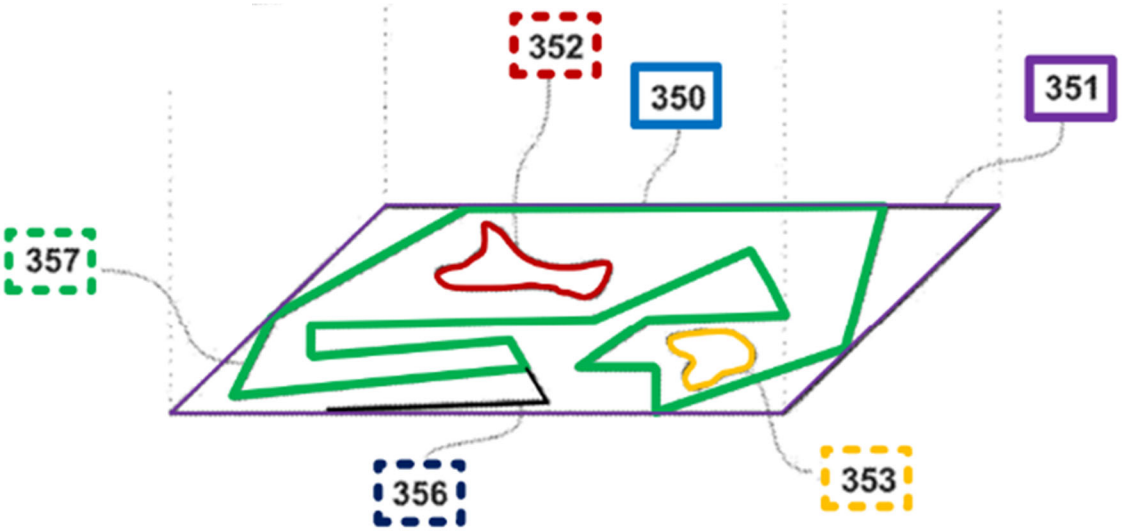

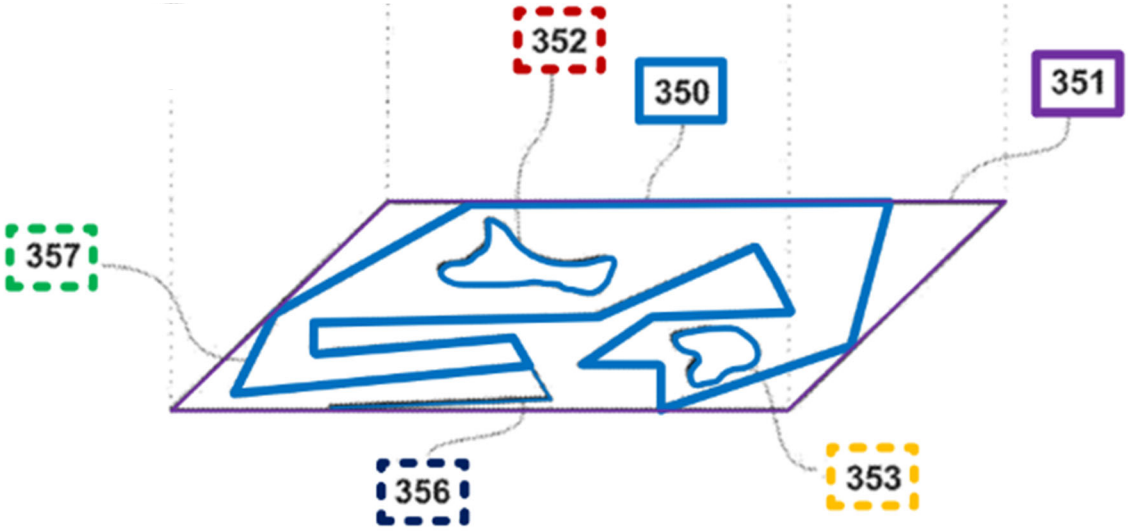

E. "*complexity factor*," "F_{21}," "F_{32}" (all claims)

Every claim recites a "*complexity factor*," which the '677 patent says is a number that characterizes an "*antenna contour*." EX1001, 16:54-61; *supra* §V.D.

The "*complexity factor* F_{21}" and "F_{32}" have no ordinary meaning in the art. Weide, ¶¶77-78. The '677 patent specification defines these factors as the numerical result of a calculation based on operations involving overlaying a series of three specifically-formulated grids (G_1, G_2, and G_3, respectively) on the "*antenna rectangle*"—thereby overlaying an "*antenna contour*"—as explained below. EX1001, 16:62-17:5; *Phillips*, 415 F.3d at 1316.

1. Grids

The '677 patent states that "[g]rids G_1 and G_3 are constructed from grid G_2[.]" EX1001, 17:16-17. The choice of the second grid dimensions (rows and columns) thus determines the first and third grid dimensions as shown below.

a. Second Grid G_2

The second grid G_2 cell size and aspect ratio—"the ratio between [cell] width and… height"—are chosen to "perfectly tesselate[]" the "*antenna rectangle*" with "an odd number of columns and an odd number of rows." EX1001, 17:18-22. The specification associates the *antenna rectangle*'s long side (i.e., "width") with grid ***columns*** and the short side (i.e., "height") with grid ***rows***. EX1001, 17:23-46.

Each grid has "substantially square or rectangular cells" (EX1001, 16:62-65), wherein if "two different combinations of a number of columns and a number of rows of cells of the second grid produce a cell as square as possible, a second grid is selected such that the aspect ratio"—the ratio of cell width to cell height—

"is larger than 1." EX1001, 17:55-64. The closer the cell's aspect ratio is to 1 (e.g., wherein the height and width of the cell are the same), the closer the cell is to square.

The '677 patent says Figure 14B shows a "second grid" 1402 "tessellat[ing]" *antenna rectangle* 1400 with 9 columns and 5 rows. EX1001, Fig. 14B (annotated below), 34:38-53, 34:60-64.

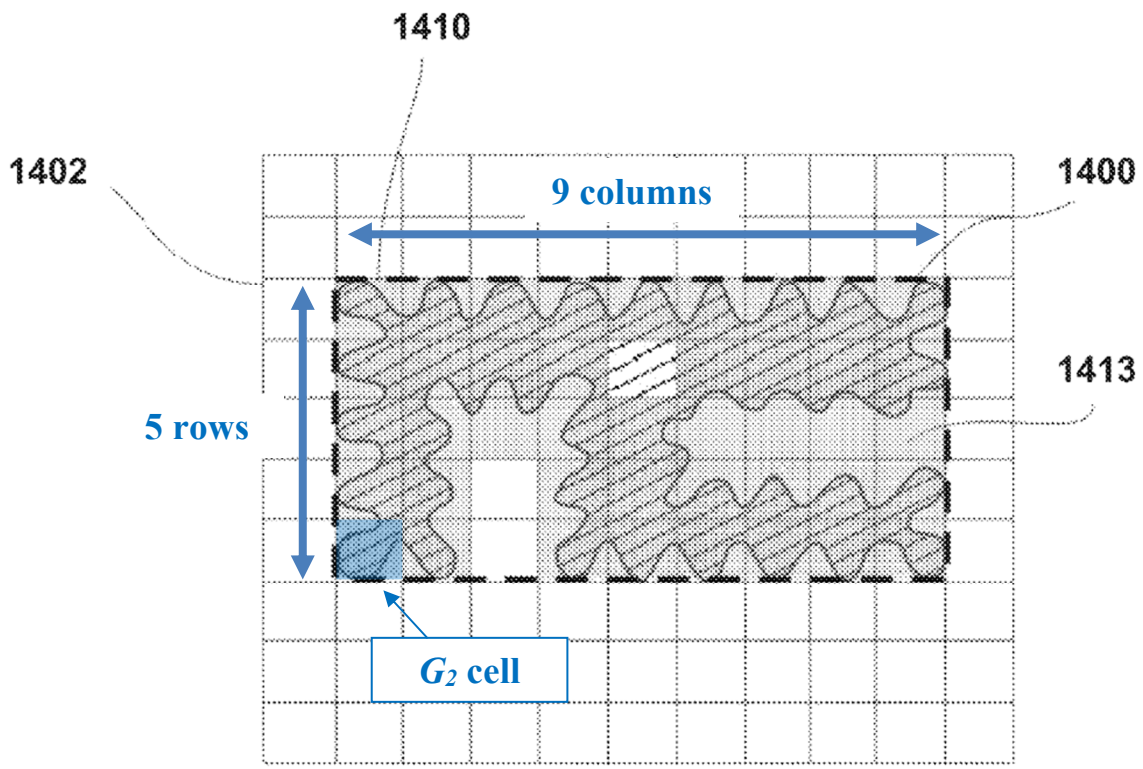

FIG. 14B

b. First Grid G_1

The '677 patent states that "[a] first cell of the grid G_1 is… created by grouping four cells of grid G_2 in such a manner that a corner of the first cell is the

feeding point corner, and the first cell is positioned completely inside the antenna rectangle." EX1001, 18:55-58.

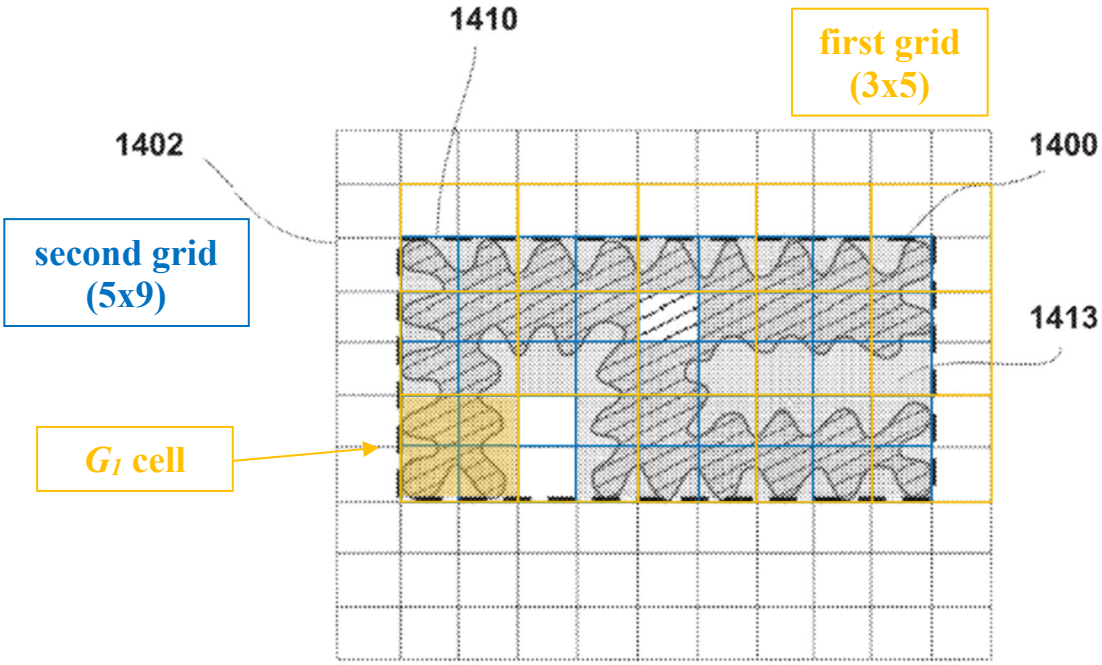

FIG. 14B

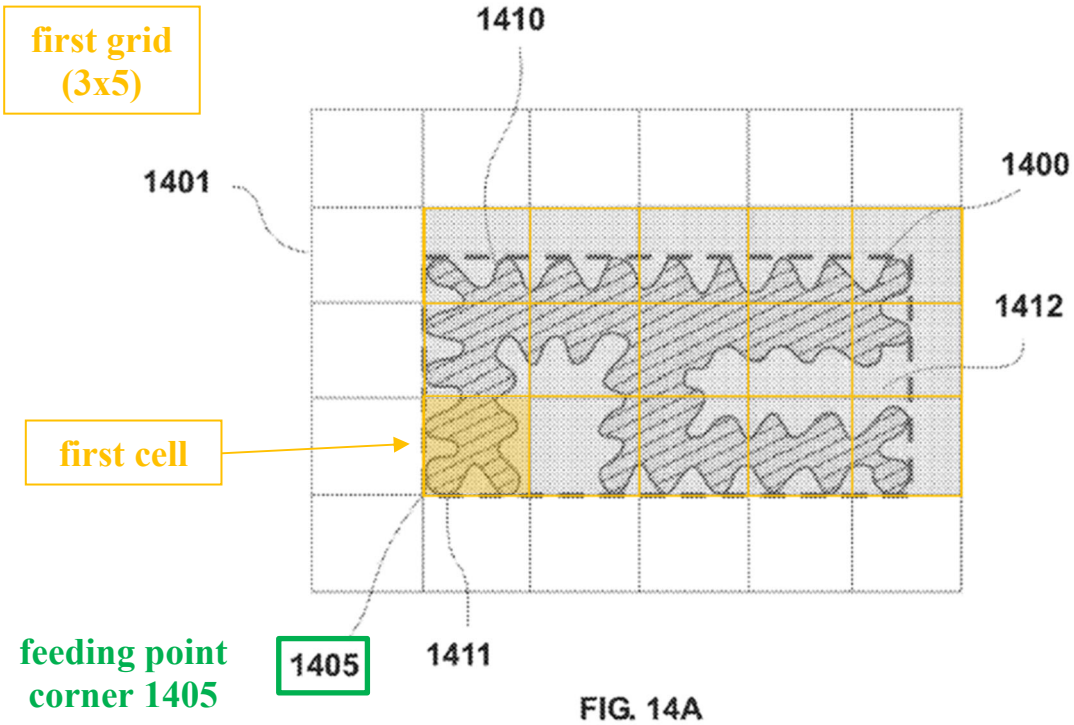

The patent defines a "feeding point corner" as "the corner of the antenna rectangle closest to the feeding point of the antenna system responsible for the [system's] operation in its lowest frequency band." EX1001, 18:16-19. After "placing" the first cell, "other [G_1] cells can be placed uniquely defining the relative position of [G_1] with respect to the antenna rectangle." EX1001, 18:59-61.

As shown below, the relevant cells of a first grid are the minimum set of cells that are all of the same size as the first cell and encompass the entire antenna contour.

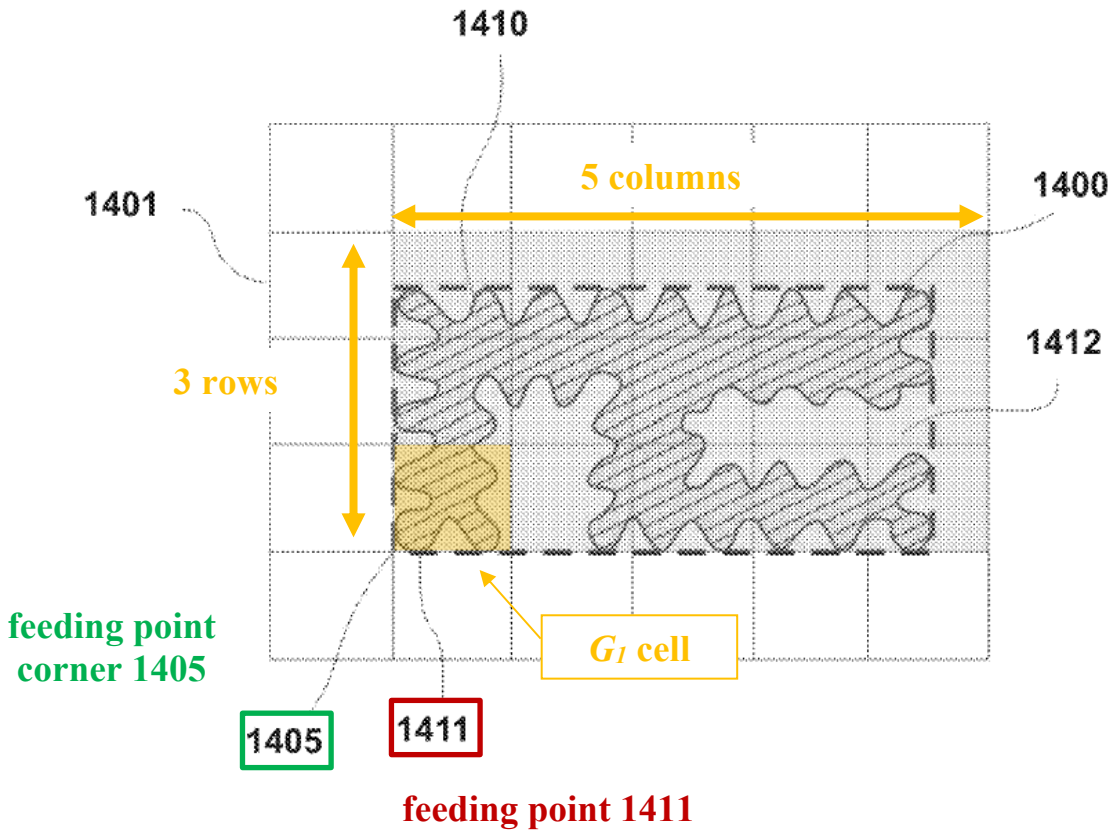

The ’677 patent says that Figure 14A shows a first grid 1401, with “feeding point 1411, located substantially close to the bottom left corner of the antenna rectangle 1405 (being thus the feeding point corner).” EX1001, Fig. 14A (annotated above), 34:38-53.

c. Third Grid G_3

The third grid (G_3) fits twice as many rows and columns within the *antenna rectangle* as the second grid (G_2), thereby replacing "each cell of… grid G_2 … with 2-by-2 cells of… grid G_3[.]" EX1001, 19:51-60. Each third grid's cell has width (W_3) that is half the second grid cell width, and height (H_3) that is half the second grid cell height. *Id.* The '677 patent states that Figure 14C shows third grid 1403 formed from second grid 1402. EX1001, Figs. 14B, 14C, 34:38-41, 34:65-35:3.

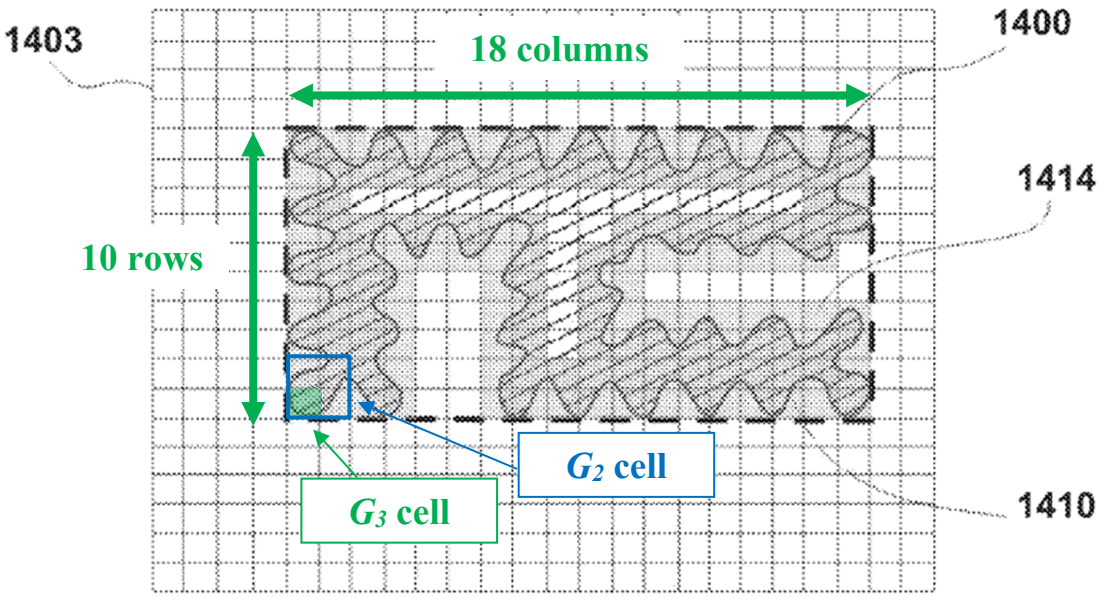

FIG. 14C

2. Calculation

The claims recite two "*complexity factors*" named "F_{21}" and "F_{32}." The '677 patent defines each "*complexity factor*" as follows.

a. "F_{21}"

"The complexity factor F_{21} is computed by":

- **[1]** counting the number of cells N_1 in grid G_1 that **[a]** "are at least partially inside the antenna rectangle" and **[b]** "include at least a point of the antenna contour"; and
- **[2]** counting the number of cells N_2 in grid G_2 that **[a]** "are completely inside the antenna rectangle" and **[b]** "include at least a point of the antenna contour[.]"

EX1001, 19:1-7. The '677 patent states "in the present invention the boundary of the cell is also part of the cell[.]" EX1001, 19:4-5.

"The complexity factor F_{21} is computed by… then applying the following formula:"

$$F_{21} = -\frac{log(N_2) - log(N_1)}{log(1/2)}$$

EX1001, 19:1-14; *Phillips*, 415 F.3d at 1316; Weide, ¶89.

Using Figure 14's *antenna contour* 1410, the patent describes:

- **a first grid** (Fig. 14A, 1401) with N_1="fifteen (15) cells," shown as shaded group 1412, meeting **[1][a]-[b]** above; and
- **a second grid** (Fig. 14B, 1402): with N_2="forty-two (42) cells," shown as shaded group 1413, meeting **[2][a]-[b]** above. Within *antenna rectangle* 1400, unshaded cells do not meet the requirement to **[2][b]** "include at least a point of the antenna contour[.]"

EX1001, Figs. 14A-14B, 34:54-64; Weide, ¶88.

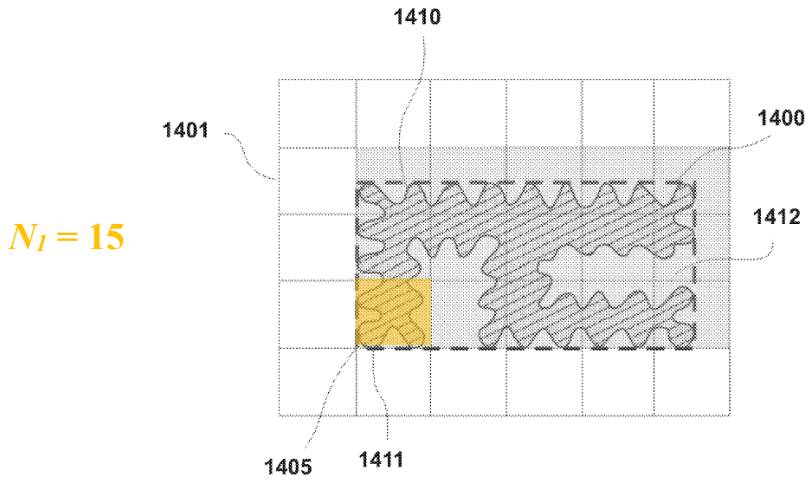

FIG. 14A

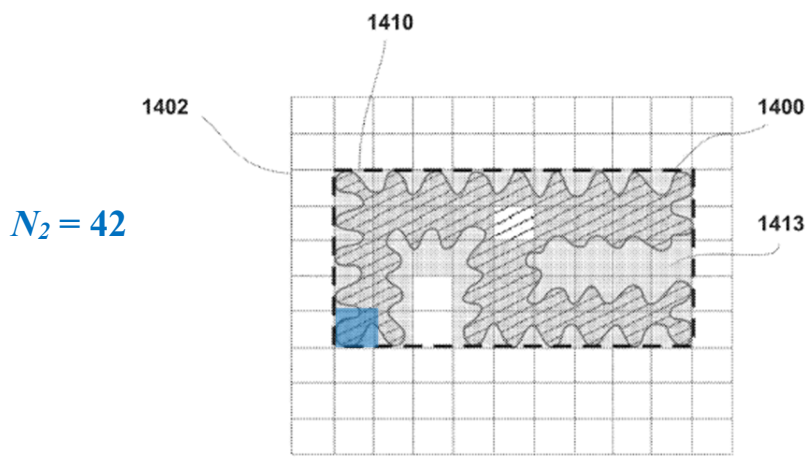

FIG. 14B

The *complexity factor* F_{21} for *antenna contour* 1410 is thus:

$$F_{21} = -\left(\frac{\log(N_2) - \log(N_1)}{\log(1/2)}\right) = -\left(\frac{\log(42) - \log(15)}{(-1)\log(2)}\right)$$

$$= \left(\frac{\log\left(42/15\right)}{\log(2)}\right) = \left(\frac{0.447}{0.301}\right) = 1.49.$$

EX1001, 35:4-10; Weide, ¶¶90-97.

b. "F_{32}"

"The complexity factor F_{31} is computed by" **[3]** counting the number of cells N_3 in grid G_3 that **[a]** "are completely inside the antenna rectangle" and **[b]** "include at least a point of the antenna contour," EX1001, 19:61-67, "and then applying the following formula:"

$$F_{32} = -\frac{log(N_3) - log(N_2)}{log(1/2)}$$

EX1001, 20:1-5; Weide, ¶98.

Using Figure 14's *antenna contour* 1410, the patent describes **a third grid** (Fig. 14C, 1403) with N_3="one hundred and forty-two (142) cells," shown as shaded group 1414, meeting **[3][a]-[b]**, where unshaded cells in Figure 14C do not meet the G_3 cell counting criteria. EX1001, Figs. 14B-14C, 34:65-35:3; Weide, ¶99.

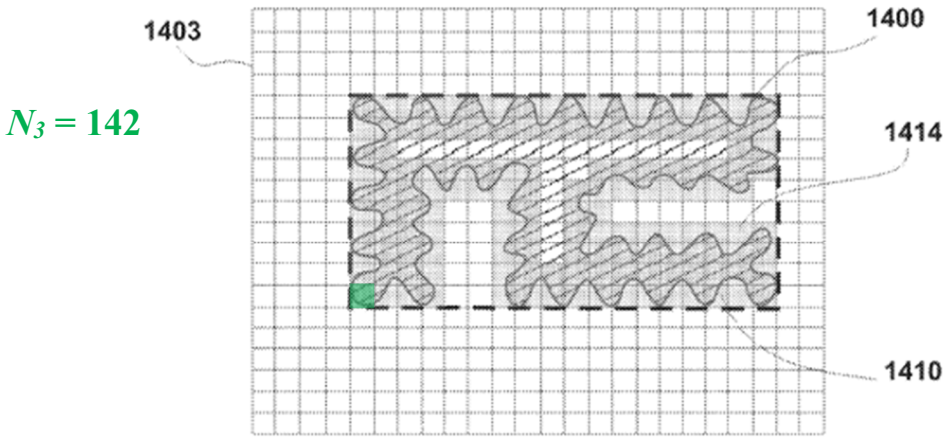

FIG. 14C

Using the $N_2 = 42$ result for Figure 14B, the *complexity factor* F_{32} for *antenna contour* 1400 is thus:

$$F_{32} = -\left(\frac{\log(N_3) - \log(N_2)}{\log(1/2)}\right) = -\left(\frac{\log(142) - \log(42)}{(-1)\log(2)}\right)$$

$$= \left(\frac{\log(142/42)}{\log(2)}\right) = \left(\frac{0.529}{0.301}\right) = 1.76.$$

EX1001, 35:11-17; *Phillips*, 415 F.3d at 1316; Weide, ¶100.

3. Fractus's ADT Litigation argument

In the ADT Litigation, Fractus argued that the '103 and '200 patent specifications—which are materially identical to the '677 patent specification—"explain precisely how to calculate the complexity factors F21 and F32[.]" EX1017, 24. Fractus's ADT Litigation construction concedes that the specification defines "*complexity factor*" and comports with the analysis *supra* §§V.E.1-V.E.2 applying the specification's instructions.

F. "*wireless device*" (all claims)

In the ADT Litigation, Fractus argued (and the court agreed) that "the ordinary meaning of 'wireless device'… refers to the nature of the communication," e.g., that the device can communicate wirelessly. EX1020, 11. The Board should apply that construction here.

G. "*4G communication standard*" terms (claims 1-5, 12-20)

The claims require antennas capable of operating with a "***4G communication standard***" (claims 1-5, 12-20): an "***antenna… configured to support [a] frequency band[]… associated with a 4G communication standard***" (claims 1-5), "***antenna… configured to… receive signals employing a 4G communication standard***" (claims 4-5), and an "***antenna… configured to… receive signals from a 4G communication standard***" (claims 12-20) (collectively "4G terms").

As shown below (*infra* §V.G.2) Fractus's litigation arguments take the position that "*4G communication standard*" is met by LTE and an "*antenna configured to… receive signals employing/from a 4G communication standard*" is met by an antenna covering LTE frequency bands. The prior art in Grounds 1 and 2 meet these "*4G*" terms under Fractus's arguments, so that there is no dispute over the meaning of the "*4G*" terms that requires the Board's resolution in order to decide Grounds 1 or 2. *10X Genomics v. Bio-Rad Labs.*, IPR2020-00086, Paper 8, 17-19 (April 27, 2020) (claim constructions based on patent owner's infringement contentions comply with 37 C.F.R. §42.104(b)(3)); *Nidec*, 868 F.3d at 1017.

Ground 3 shows that the full scope of the genus "*4G communication standard*" is unsupported by the written description in the priority documents. This issue can also be decided under Fractus's litigation arguments, so that there is

no dispute over the meaning of the "*4G*" terms that requires the Board's resolution in order to decide Ground 3. *Nidec*, 868 F.3d at 1017.

Regardless, the relevant evidence on the meaning of the "*4G*" terms is explained below.

1. Intrinsic evidence

The written description never uses the term "*4G communication standard*." The '677 specification equates "4G standards" with "4G services" providing "4G features":

> A MFWD incorporating 3.5G or ***4G features*** (i.e., comprising 3G and other advanced services such as for instance HSDPA, WiBro, WiFi, WiMAX, UWB or other high-speed wireless standards, ***hereinafter 4G services***) might require operation in additional frequency bands corresponding to ***said 4G standards***[.]

EX1001, 25:1-6. The antecedent for "said 4G standards" (EX1001, 25:6) is "4G services," and the "frequency bands corresponding to said 4G standards" comprise "frequency bands of the 4G services[.]" *Id.*, 25:1-16. The patent defines a "4G antenna" as an "antenna covering one or more of the 4G services[.]" EX1001, 25:22-24; *Phillips*, 415 F.3d at 1316.

Thus, "*4G communication standard*" is met by a "wireless standard" for "4G services" and "*antenna… configured to… receive signals from a 4G communication standard*" (or "*receive signals employing a 4G communication*

standard") is met by an antenna that is operable in a frequency range used by a "4G service," where the "i.e." signal means that the patent defines a "4G service" as "comprising 3G and other advanced services such as for instance HSDPA, WiBro, WiFi, WiMAX, UWB or other high-speed wireless standards[.]" EX1001, 25:1-6; *Phillips*, 415 F.3d at 1316.

2. Fractus's Litigation Arguments

In the ADT Litigation, Fractus argued that "antenna functions" for "*4G communication standard*" meant antenna "compatibility with HSDPA, WiFi, WiMax, WiBro, UWB, or other highspeed wireless standards" further including "second-generation (2G) mobile, IMT-2000, [and] wireless local area network (WLAN)" (EX1017, 19-20) while "communication standard" meant "technical specifications relating to mobile or radio communication systems, including but not limited to GSM, UMTS, CDMA, W-CDMA, and LTE." EX1017, 20 n.9; EX1018, 10 (¶36). Fractus also argued that "*receive signals from a 4G communication standard*" meant "the antenna could interact with a signal sent by a Fourth generation cellular technology to obtain or receive electromagnetic energy." EX1017, 18 n.8 (cleaned up); EX1018, 10 (¶37).

In the Geotab Litigation, Fractus maps [1.d] "*frequency bands being associated with a 4G communication standard*" to LTE bands 2, 4, and 12. EX1024, 21 ('677 patent); EX1016, 3.

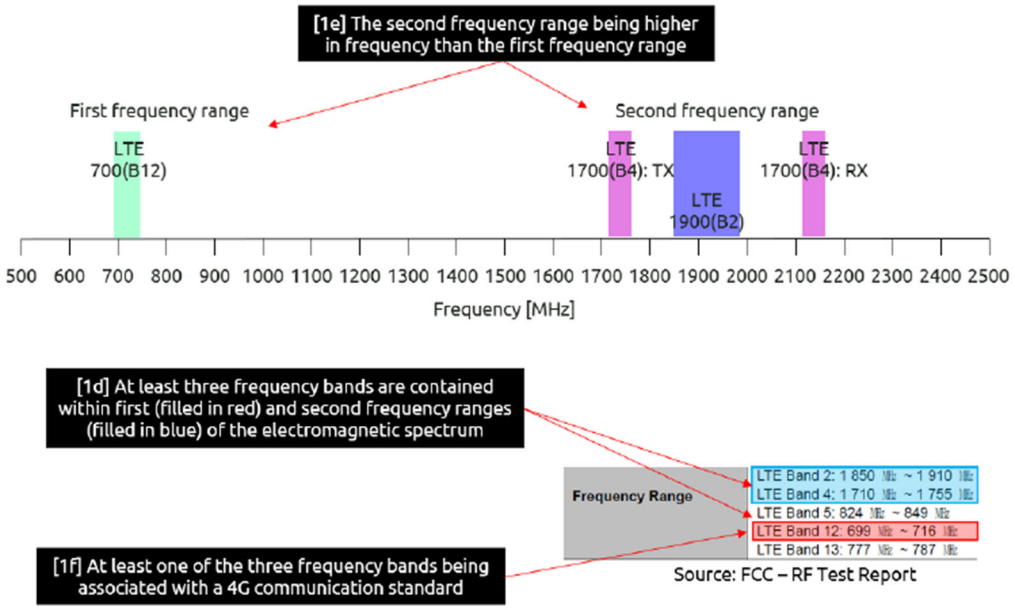

EX1024, 21; *see* IPR2025-01026, EX1047, EX1048.

Thus, Fractus takes the litigation position that "*4G communication standard*" is met by LTE. This comports with LTE, which was "an evolution of 3G into an evolved radio access," meeting the ordinary meaning of "*4G communication standard*." EX1039, 3, 21-25; Weide, ¶¶110-111. LTE is a "fourth generation cellular technology" so that an antenna that can send/receive signals using LTE meets Fractus's construction of "*receive signals from a 4G communication standard*" as "the antenna could interact with a signal sent by a Fourth generation cellular technology to obtain or receive electromagnetic energy." EX1017, 18 n.8; Weide, ¶111.

VI. GROUND 1: DOU+CIAIS-QUADBAND RENDERS OBVIOUS CLAIMS 1-9

A. Dou (EX1013)

Dou describes a wireless handheld device with an internal diversity antenna architecture for wireless devices such as, e.g., a handheld computer, mobile telephone, personal digital assistant (PDA), or pager. Dou, Abstract, [0015]. The diversity architecture improves performance by using multiple antennas. Dou, [0001]-[0003], [0018]-[0022]; Weide, ¶113. Dou describes locating a first antenna substantially near the top—and a second antenna located substantially near the bottom—of a device housing and/or internal PCB. Dou, Figs. 2A, 3A, [0017], [0032].

Dou describes using antennas tuned for operating at multiple frequency ranges associated with several different services including, e.g., GSM, PCS, WCDMA/UMTS, GPS, NAMPS, "WiFi," and Bluetooth. Dou, [0022]. The antennas "may be implemented using any type of suitable internal antenna" (Dou, [0028]) and can be of different types. Dou, [0034] (describing first antenna 206 comprising a "planar inverted-F antenna" (PIFA) while second antenna 208 "may comprise" any "other suitable antenna"). Dou's wireless device can include "an additional antenna" of "any suitable type… disposed within the housing[.]" Dou, [0040].

B. Ciais-Quadband (EX1009)

Ciais-Quadband discloses a "miniature multiband internal antenna" for "modern mobile handsets" that "covers"—i.e., can send and receive signals at—870-960 MHz with a VSWR "better than" (i.e., less than) 2.5:1 and at 1710-2170 MHz with a VSWR under 2.0:1. Ciais-Quadband, Fig. 3, 148-150. These VSWR levels are below the maximum levels that the '677 patent calls a functional requirement for antennas at these frequencies. EX1001, 37:8-37, Table 1 (specifying maximum VSWR 3.5:1 for 800-960 MHz, VSWR 3.0:1 for 1710-1990 MHz, and VSWR 2.5:1 for 1920-2170 MHz); Weide, ¶¶116-117.

C. Dou+Ciais-Quadband

While Dou describes a wireless handheld device having internally-mounted antennas, it does not describe particular antennas for implementing its wireless devices and Dou leaves the antenna selection to a POSA. Weide, ¶118.

A POSA had reasons to implement each of Dou's first antenna 206 and second antenna 208, as shown in Dou Figures 2A-2B, as a Ciais quadband antenna. Ciais's quadband antenna was designed for internal use in mobile phones, making it suitable for use as Dou's "internal antenna" 206 and 208 "disposed within… housing 202 of the wireless device 200." Dou, [0018]; Ciais-Quadband, 148, 150; Ciais's quadband antenna is a planar inverted-F antenna (PIFA) (Ciais-Quadband, Abstract), which Dou describes using for the first and second antennas. Dou,

[0028]. Ciais's quadband antenna provided operation at 870-960 MHz and 1710-2170 MHz, each of which used well-known communication standards (GSM, DCS, PCS, UMTS), making the antenna "suitable for mobile phone applications" like Dou's wireless device. Ciais-Quadband, 148, 150; Dou, [0022] (describing exemplary coverage for GSM, PCS, and "WCDMA/UMTS" operations); Weide, ¶¶119-120.

Dou describes its wireless device having "three or more antennas" that "may comprise any suitable type of internal antenna" (Dou, [0040]), and describes the wireless device having an antenna covering frequencies for GPS (1575 MHz) or WiFi or Bluetooth (ISM 2.4 GHz). Dou, [0022]. A POSA would have had reasons to include a GPS antenna and an antenna supporting WiFi and Bluetooth to provide the services that Dou describes, in frequency ranges Ciais's quadband antenna did not cover. Weide, ¶121. The resulting combination has four antennas: antennas 206 and 208, a GPS antenna, and a 2.4 GHz antenna for WiFi/Bluetooth. Providing GPS and WiFi/Bluetooth antennas in a mobile device was conventional. EX1029, Fig. 9 (below), [0044] (GPS antenna **64**, WLAN antenna **61**, Bluetooth antenna **66**); Weide, ¶¶122-123.

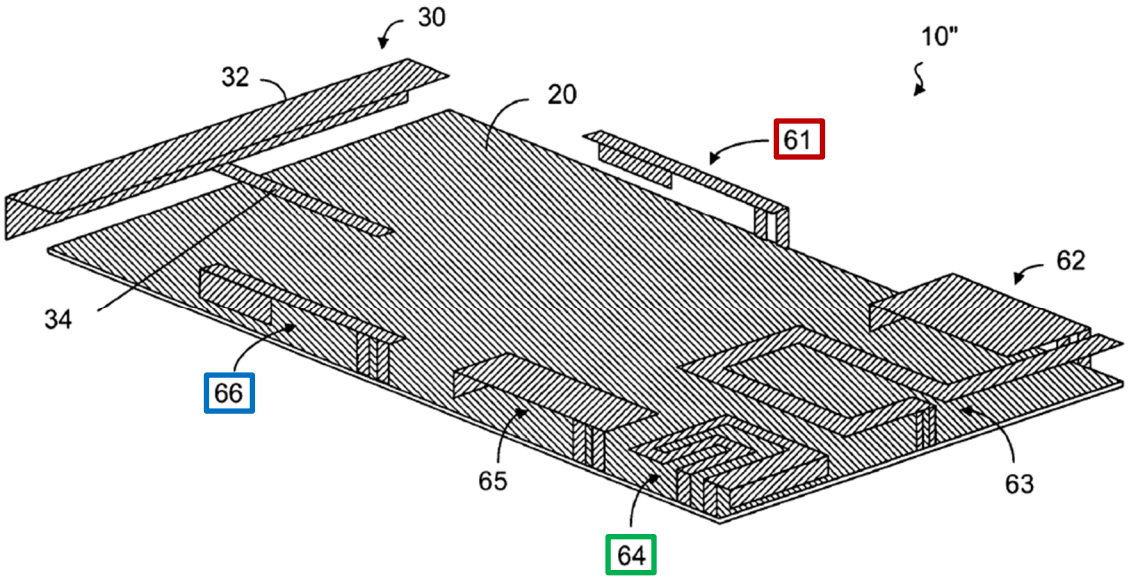

FIG. 9

Implementing Dou's wireless device with Dou's first antenna 206 and second antenna 208 each provided by a separate Ciais quadband antenna would have been nothing more than combining familiar elements according to known methods with predictable results, and been no more than the "predictable use of prior art elements according to their established functions." *KSR Int'l v. Teleflex*, 550 U.S. 398, 416-417 (2007). Weide, ¶124. The same is true of adding an antenna for GPS and another for WiFi and Bluetooth to Dou's device to provide the multiband coverage that Dou describes. Weide, ¶125.

A POSA would have had a reasonable expectation of success in using Ciais's quadband antenna in Dou's wireless device because Ciais designed the quadband antenna for internal use in cellular telephones (Ciais-Quadband, 148, 150), and Dou expressly contemplates using a multiband PIFA antenna—like the

Ciais quadband antenna—as its first and second internal antennas (e.g., Dou, [0028]-[0029]). Weide, ¶126. Dou describes antenna placement within the device according to "various performance and design constraints" known to a POSA. Dou, [0030]; Weide, ¶127. Ciais describes placing the quadband antenna at the end of a PCB "on the corner of a ground plane" where Dou places its antennas 206 and 208. Ciais-Quadband, Fig. 1, 148; Dou, Figs. 2A-2B, [0029]. It was well within the POSA's ordinary skill to implement Dou's wireless device with Ciais's quadband antenna, and the resulting antenna operation was predictable. Dou, [0012], [0063]; Weide, ¶127.

A POSA also would have had a reasonable expectation of success including an antenna covering GPS and another covering WiFi and Bluetooth in Dou's wireless device—as Dou describes—because it was conventional (EX1029, [0044]), Dou explains that "the antenna architecture may comprise three or more antennas" (Dou, [0040]), and Dou specifically describes the wireless device having coverage including for GPS and WiFi and Bluetooth (Dou, [0022]). Weide, ¶128.

This combination of Dou in view of Ciais-Quadband (hereinafter "Dou+Ciais-Quadband") meets the Challenged Claims as shown below.

D. Claim 1

1. Preamble [1.PRE]

1.PRE	A wireless device comprising:

Dou+Ciais-Quadband meets [1.PRE] because Dou's modified device is a wireless device like a handheld computer, mobile telephone, or PDA. Dou, [0015]-[0016], claim 1; Weide, ¶130.

2. Limitation [1.a]

1.a	an antenna system comprising:

Dou+Ciais-Quadband meets [1.a] because Dou's antenna system, with Ciais's quadband antenna implementing Dou's antenna 206 and 208, meets Limitations [1.b]-[1.h] as shown below. Dou, [0014], [0017] ("internal diversity antenna architecture comprising a first antenna 206 and a second antenna 208 disposed on… PCB 204"); Weide, ¶¶131.

3. Limitation [1.b]

1.b	a ground plane;

Dou+Ciais-Quadband meets [1.b] because it uses Dou's ground plane 210 to implement Ciais's ground plane teaching. Dou, Fig. 2B, [0029]; Ciais-Quadband, 148, 150, Fig. 1(a); Weide, ¶132.

4. Limitation [1.c]

1.c	a first antenna within the wireless device and configured to support at least three frequency bands contained within first and second frequency ranges of the electromagnetic spectrum,

The plain meaning of "*at least three frequency bands contained within the first and second frequency ranges*" is that the first and second frequency ranges ***together*** contain within them "*at least three frequency bands*." This is also how Fractus construes the language in its litigation arguments. EX1024, 21 (detail below).

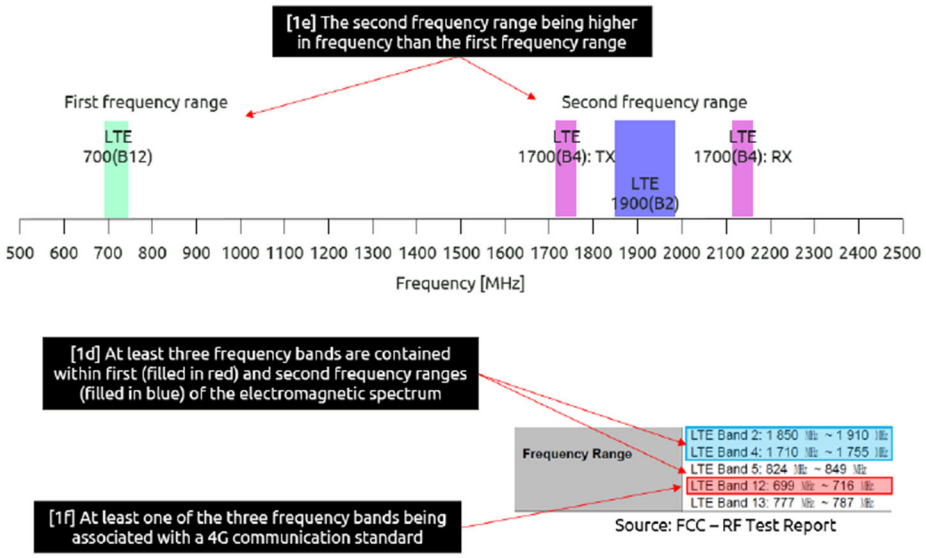

Dou+Ciais-Quadband meets [1.c] because it implements Dou's antenna 206, *within* the wireless device housing, using Ciais's quadband antenna ("*first antenna*"). *Supra* §VI.C (combination); Dou, [0017]; Weide, ¶134.

Ciais's quadband antenna covers—i.e., is capable of sending and receiving electromagnetic radiation at ("*configured to support*")—**870-960 MHz** and **1710-2170 MHz** (e.g., "*first and second frequency ranges of the electromagnetic spectrum*"). Ciais-Quadband, Fig. 3, 148-150; *supra* §VI.B (discussing Ciais-Quadband); Weide, ¶135.

A POSA understood that a "*frequency band*" is a frequency range specified by a regulatory or standards body for a particular use, such as a type of wireless communication. Weide, ¶136. Ciais's quadband antenna supports "*frequency bands*" that are contained within the antenna's supported frequency ranges. Weide, ¶137. Although Ciais describes its antenna as "quad-band" (Ciais-Quadband, 148), the antenna is "*configured to support*" at least twenty-five (25) frequency bands "*contained within*" the frequency ranges it supports. Weide, ¶¶137-139.

The **870-960 MHz** range ("*first frequency range*") contains at least ***four*** "*frequency bands*" shown in Table 1.

Table 1: Frequency bands within 870-960 MHz.

Band	Range (MHz)
standard GSM900	890-960
extended GSM900	880-960
ISM	902-928
LTE Band 8	880-960

EX1030, 8-9 ("Standard or primary" and "Extended" "GSM 900 band"); EX1001, 10:14-23 (discussing ISM 902-928 MHz); EX1025, 13, Table 5.5-1 ("E-UTRA operating bands"); EX1026, 11 (listing LTE FDD and TDD bands); EX1039, 497-501; Weide, ¶¶138, 142-144.

The **1710-2170 MHz** range ("*second frequency range*") contains at least **twenty-one** "*frequency bands*" shown in Table 2.

Table 2: Frequency bands within 1710-2170 MHz.

Band	Range (MHz)
DCS1800	1710-1880
PCS1900	1850-1990
UMTS Band I	1920-2170
UMTS Band II	1880-1990
UMTS Band III	1710-1880
UMTS Band IV	1710-2155
UMTS Band a	1900-1920, 2010-2025
UMTS Band b	1850-1910, 1930-1990
UMTS Band c	1910-1930
LTE Band 1	1920-2170
LTE Band 2	1850-1990
LTE Band 3	1710-1880
LTE Band 4	1710-2155
LTE Band 9	1749.9-1879.9
LTE Band 10	1710-2170
LTE Band 33	1900-1920
LTE Band 34	2010-2025
LTE Band 35	1850-1910
LTE Band 36	1930-1990
LTE Band 37	1910-1930
LTE Band 39	1880-1920

Ciais-Quadband, 148 (DCS, PCS, UMTS); EX1030, 8-9 (DCS1800, PCS1900); EX1039, 139 (reference [100] identifies HSDPA specifications), 497-501, 599 (reference [100] is 3GPP TS 25.308 (EX1032)); EX1032 (UMTS HSDPA description); EX1035, 11-12 (UMTS standard comprises TS 25.101 (EX1033), 25.102 (EX1034), TS 25.308 (EX1032)); EX1033, 12-13 (Table 5.0 "UTRA FDD

frequency bands"); EX1034, 11 (UTRA/TDD frequency bands);[6] EX1025, 13, Table 5.5-1 ("E-UTRA operating bands" defining LTE bands); EX1026, 11 (listing LTE FDD and TDD bands); Weide, ¶¶139-144.

Thus, the Ciais-Quadband antenna is "*configured to support at least three frequency bands contained within first and second frequency ranges of the electromagnetic spectrum*" because it supports (e.g., is operable to send and receive radiation in) at least four bands in the *first frequency range* and at least twenty-one bands in the *second frequency range*, meeting [1.c]. Weide, ¶145.

5. Limitation [1.d]

1.d	the second frequency range being higher in frequency than the first frequency range and at least one of the three frequency bands being associated with a 4G communication standard,

Dou+Ciais-Quadband meets [1.d] because its *second frequency range* (1710-2170 MHz) is "*higher in frequency*" than its "*first frequency range*" (870-960 MHz) and because as shown below, "*at least* one" of the at least twenty-five (25) supported frequency bands (*supra* §VI.D.4 ([1.c]) is "*associated with a 4G*

[6] While Dou refers to "WCDMA/UMTS" in 1710-2170 MHz (Dou, [0022]), as shown in Table 2 the standard defines at least seven distinct "bands" within the 1710-2170 MHz frequency range. Weide, ¶139 n.2.

communication standard." The band associated with a 4G standard is met by Dou+Ciais-Quadband in any of multiple ways.

First, the Ciais-Quadband antenna supports at least seven (7) UMTS frequency bands, each of which is "*associated with a 4G communication standard*" at least because they support HSDPA. Supra §VI.D.4 ([1.c]), Table 2; Weide, ¶¶147-149. HSDPA is part of the Universal Mobile Telecommunications System (UMTS) and supported by the UMTS frequency bands. EX1039, 139, 599 (EX1032 identifies HSDPA specification); EX1032 (UMTS HSDPA description); EX1035, 11 (UMTS standard comprises 3GPP TS 25.101 (EX1033), 25.102 (EX1034)), 12 (UMTS standard comprises 3GPP TS 25.308 (EX1032)); Weide, ¶148. The '677 patent expressly defines HSDPA as a "4G feature" and "4G service" that it equates with a "4G standard." EX1001, 25:1-6; *supra* §V.G (claim construction).

Second, the ISM band at 902-928 MHz, which Ciais's quadband antenna covers, is "*associated with a 4G communication standard*." Supra §VI.D.4 ([1.c]), Table 1; Weide , ¶¶150-152. The '677 patent expressly identifies "WiFi, WiMAX, WiBro, UWB or other high-speed wireless standards" as "4G services." EX1001, 25:1-4. As the '677 patent recognizes, Zigbee is a "high-speed wireless standard" for wireless networking like WiFi, Bluetooth, and UWB. EX1031, 17-18 (Zigbee uses IEEE Std. 802.15.4 wireless networking layers, provides wireless peer-to-peer

communication in mesh networks), 31; EX1001, 10:14-23, 25:1-4. Zigbee is thus a "*4G communication standard*" because it is a "wireless standard" for "4G services" (*supra* §V.G). Weide, ¶151. Zigbee uses the ISM band at 902-928 MHz. EX1031, 17 (IEEE 802.15.4-2003, PHY layer 915 MHz), 18, Fig. 1 (same), 70 (Table 23); Weide, ¶152.

Third, as explained *supra* §V.G, Fractus argues in litigation that [1.d] is met by LTE bands. EX1024, 21 (excerpt below); EX1039, 497-502 (describing LTE frequency bands).

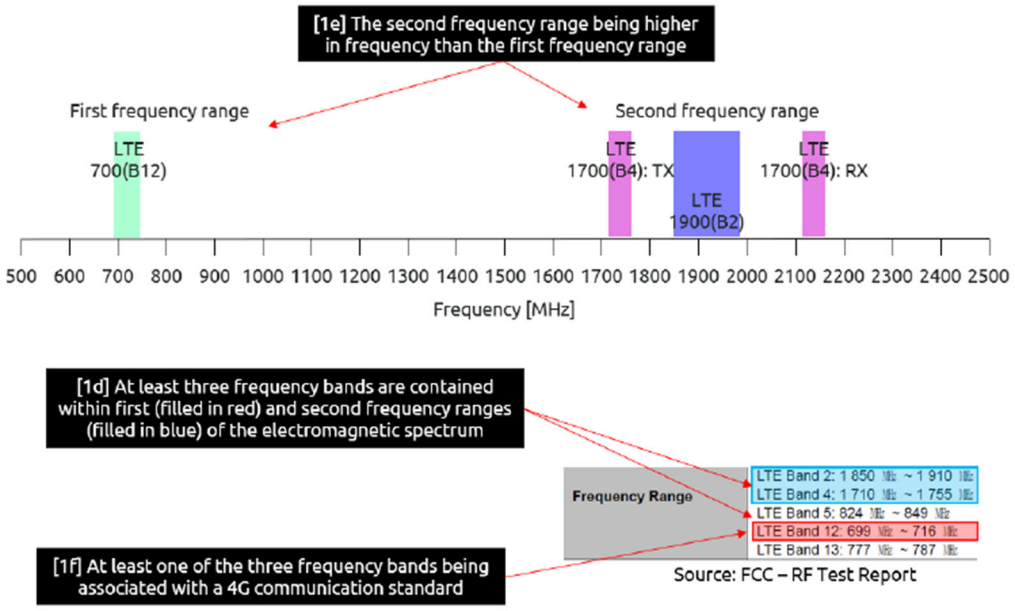

EX1024, 21.

The thirteen (13) LTE bands covered by Ciais's antenna—including LTE bands 2 and 4 whose uplink portions Fractus expressly identifies in litigation—are each "*associated with a 4G communication standard*". *Supra* §§V.G.2, VI.D.4 ([1.c]), Tables 1, 2; Weide, ¶¶153-154.

6. Limitation [1.e]

1.e	the first antenna being proximate to a first short side of a ground plane rectangle enclosing the ground plane and defining a first antenna contour comprising an entire perimeter of the first antenna,

Dou+Ciais-Quadband meets [1.e] because it implements Dou's teaching to dispose antenna 206 (*first antenna*) at the top of PCB 204. Dou, Fig. 2A, [0016]-[0017]; Weide, ¶155.

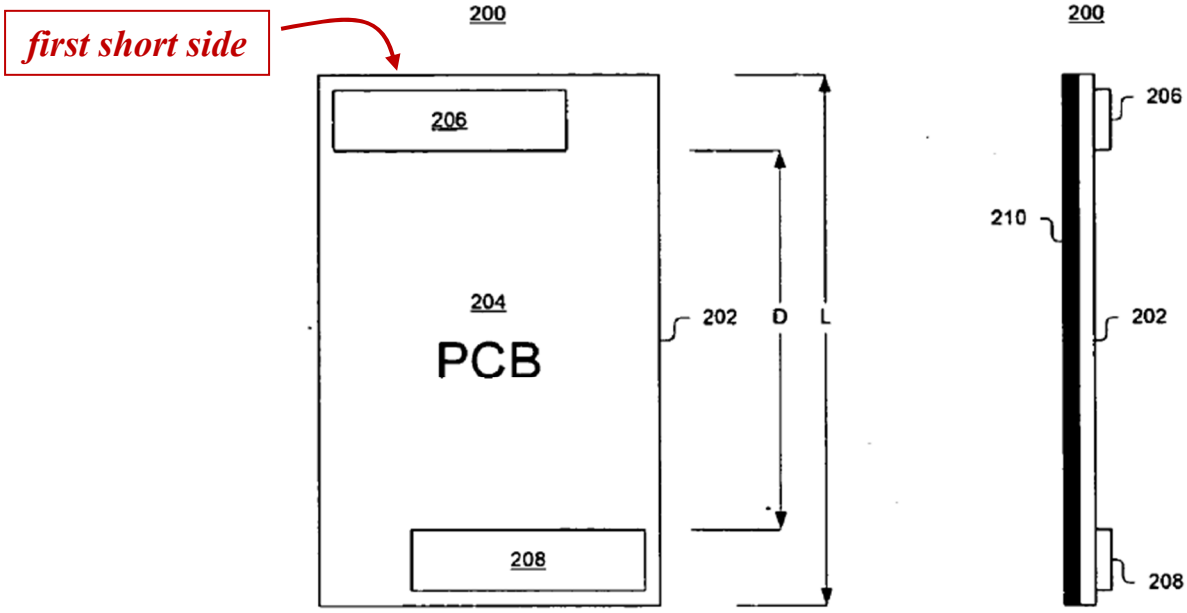

FIG. 2A FIG. 2B

PCB 204's rectangular area defines a rectangle ("*ground plane rectangle*") that "*enclos[es]*" the ground plane 210 disposed on the side of the PCB opposite from antenna 206. Dou, Figs. 2A-2B, [0016]-[0017], [0029]; Weide, ¶¶155-156. Ciais teaches a rectangular (40.5 mm x 105 mm) PCB, also backed by a ground

plane, that Ciais explains is representative of PCBs for typical mobile phones. Ciais-Quadband, Fig. 1, 148; Weide, ¶¶156-157.

The top/shorter edge of PCB 204 is a "*first short side*." Disposing antenna 206 at the top of the PCB as taught by Dou places it "*proximate to a first short side of a ground plane rectangle*" defined by the PCB area. Dou, Figs. 2A-2B (annotated above), [0016]-[0017], [0029]; Weide, ¶157.

A POSA would have understood that "*entire perimeter*" is met by the perimeter of disjoint segments comprising the antenna contour. EX1001, 33:50-59, Fig. 12A (contour comprises combination of perimeter of elements 1201 and 1202). Weide, ¶158.

The Ciais quadband antenna (*first antenna*, *supra* §VI.D.4 ([1.c])) has a planar "main patch" over vertical elements and a 1.2mm long "capacitive load." Ciais-Quadband, Fig. 1(a).

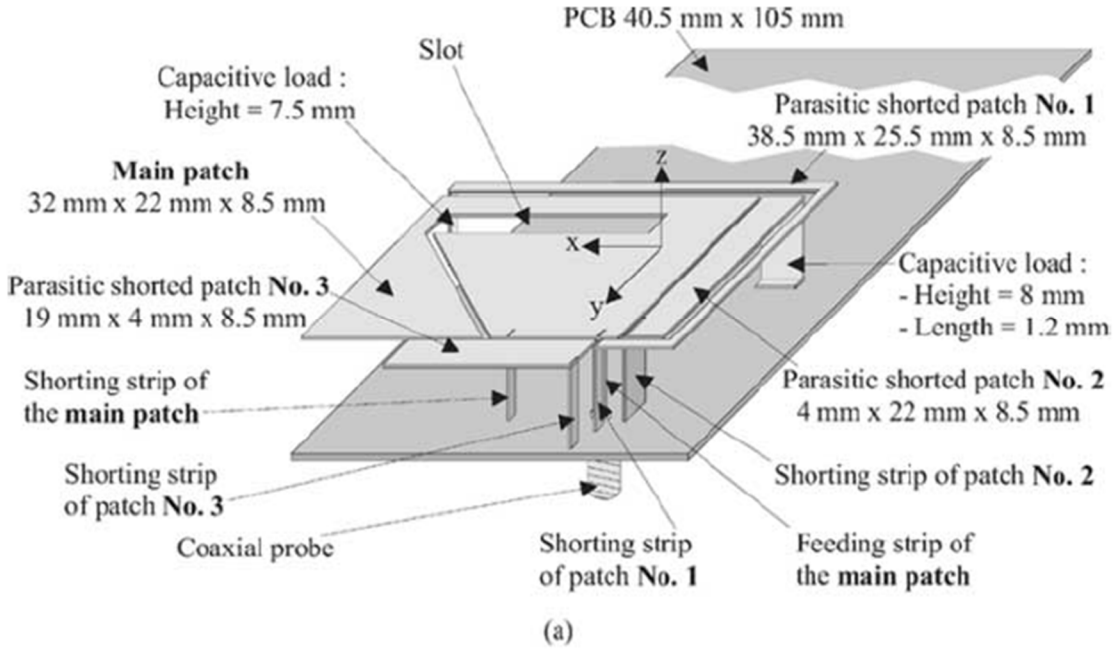

The minimum rectangle enclosing an orthogonal projection of the Ciais quadband antenna ("*antenna rectangle*") through the main patch is 38.5 mm × 28.5 mm. Ciais-Quadband, Fig. 1(b), 149; *supra* §V.C (claim construction); Weide, ¶¶159-161. Ciais's top planar view in Figure 1(b) (annotated below) shows the *antenna contour* (blue outline) bounded by the *antenna rectangle* (purple outline) including "disjoint[ed] segments" from orthogonal projection of the vertical feed and shorting strips and the planar 4 mm × 1.2 mm "capacitive load" segment near the PCB surface. *Supra* §V.D (claim construction); EX1001, 15:6-16; Weide, ¶¶162-163.

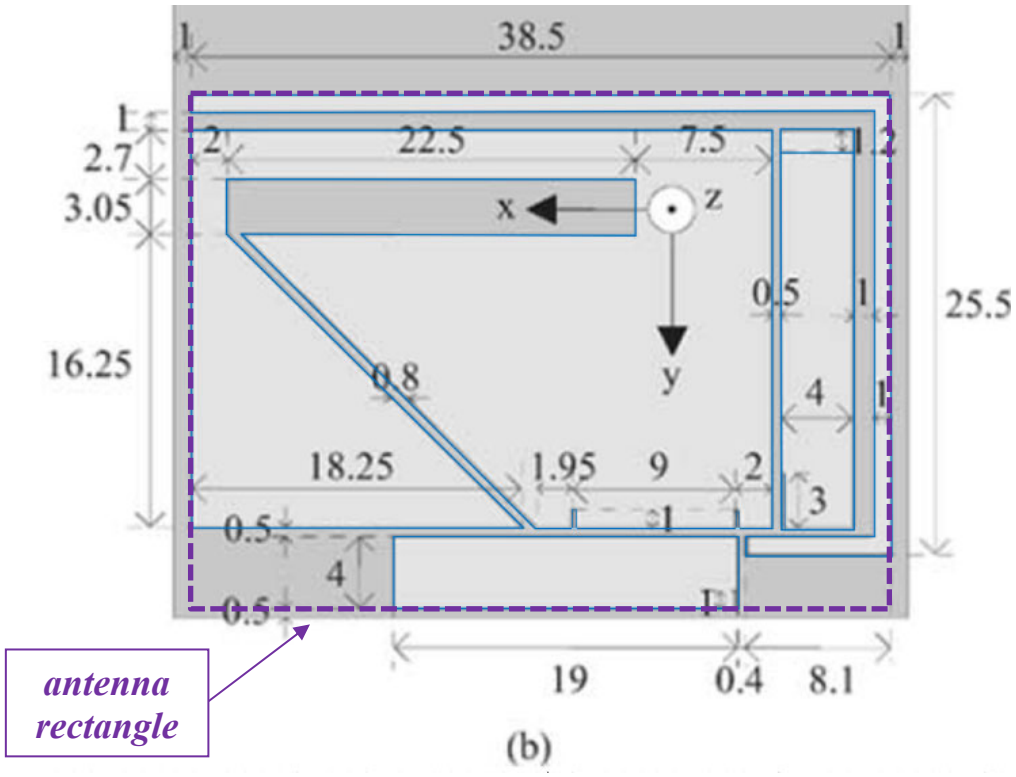

Ciais's quadband antenna thus "*defin[es] a first antenna contour comprising an entire perimeter of the first antenna,*" just like the perimeter of antenna contour 350 in the '677 patent's embodiments in Figure 3 or antenna system 1200 in Figure 12A (below right), meeting [1.e]. EX1001, 7:1-2, 7:53-55, 27:44-28:8, 33:50-63; *supra* §§V.A (*perimeter*), V.D (*antenna contour*); Weide, ¶¶164-186.

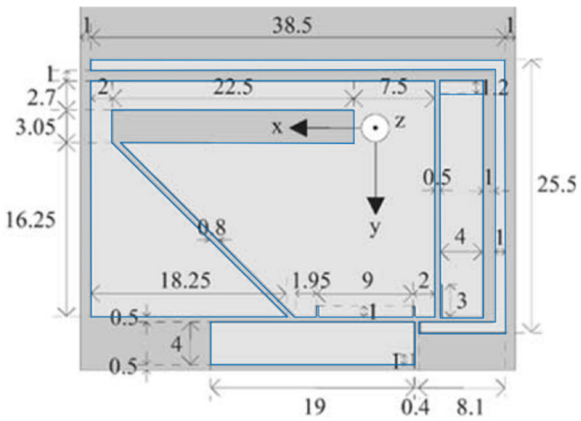

(b)

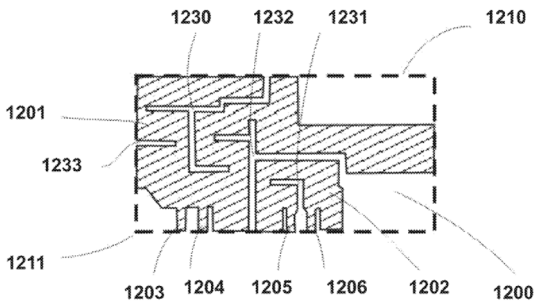

FIG. 12A

Following the ’677 patent’s usage (e.g., Figs. 12A, 13A), the below figure shows the Ciais quadband antenna contour with slant fill marking the main patch conductive elements bounded by the *antenna contour*. Weide, ¶187.

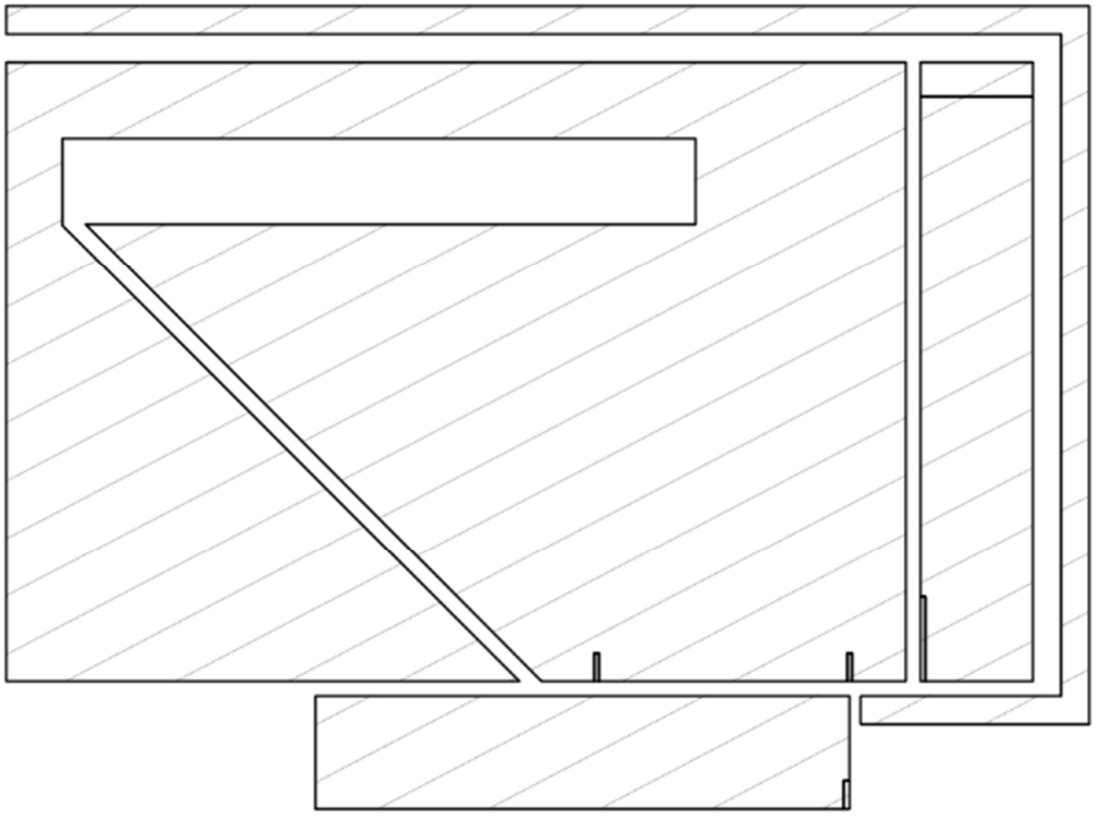

7. Limitation [1.f]

1.f	wherein the first antenna contour has a level of complexity defined by complexity factor F_{21} having a value of at least 1.20 and complexity factor F_{32} having a value less than 1.75; and

Dou+Ciais-Quadband meets [1.f] because as shown below the quadband antenna contour ("*first antenna contour*") meeting [1.e] has *complexity factor* F_{21} = 1.31 ("*at least 1.20*") and F_{32} = 1.57 ("*less than 1.75*"). Weide, ¶188.

a. Calculating F_{21}

i. Grid G_2

The '677 patent identifies a preferred embodiment wherein second grid G_2 has **nine** columns. EX1001, 17:39-41. With a 38.5 mm × 28.5 mm *antenna rectangle* (Ciais-Quadband, Fig. 1(b), 149), **nine columns** yields a cell width $\left(\frac{38.5\ mm}{9}\right) = 4.28$ mm. Weide, ¶189.

Setting an odd number of **five**, **seven**, and **nine** rows yields these results, where aspect ratio is the ratio of cell width to cell height (EX1001, 17:19-20):

# rows	cell height (mm)	aspect ratio
5	$\left(\frac{28.5\ mm}{5}\right) = 5.7$	$\left(\frac{4.28}{5.7}\right) = 0.75$
7	$\left(\frac{28.5\ mm}{7}\right) = 4.07$	$\left(\frac{4.28}{4.07}\right) = 1.05$
9	$\left(\frac{28.5\ mm}{9}\right) = 3.17$	$\left(\frac{4.28}{3.17}\right) = 1.35$

Weide, ¶190.

Therefore **seven** rows provides grid cells "as square as possible," e.g., an aspect ratio closest to one. *Supra* §V.E.1.a (claim construction); EX1001, 16:62-65, 17:18-64; Weide, ¶191. Thus, grid G_2 with **nine (9) columns** and **seven (7) rows** has cells "as square as possible[.]" Weide, ¶191.

ii. $N_2 = 47$

The 7 x 9 grid G_2 (blue outline) is superimposed over the quadband *antenna contour* below. For visual clarity, the sixteen (16) cells that do ***not*** "include at least a point of the antenna contour" are shaded yellow. *Supra* §V.E.2.a; EX1001, 19:1-7; Weide, ¶¶192-196. Thus, the G_2 cell count $\boldsymbol{N_2} = (63 - 16) = 47$. Weide, ¶192.

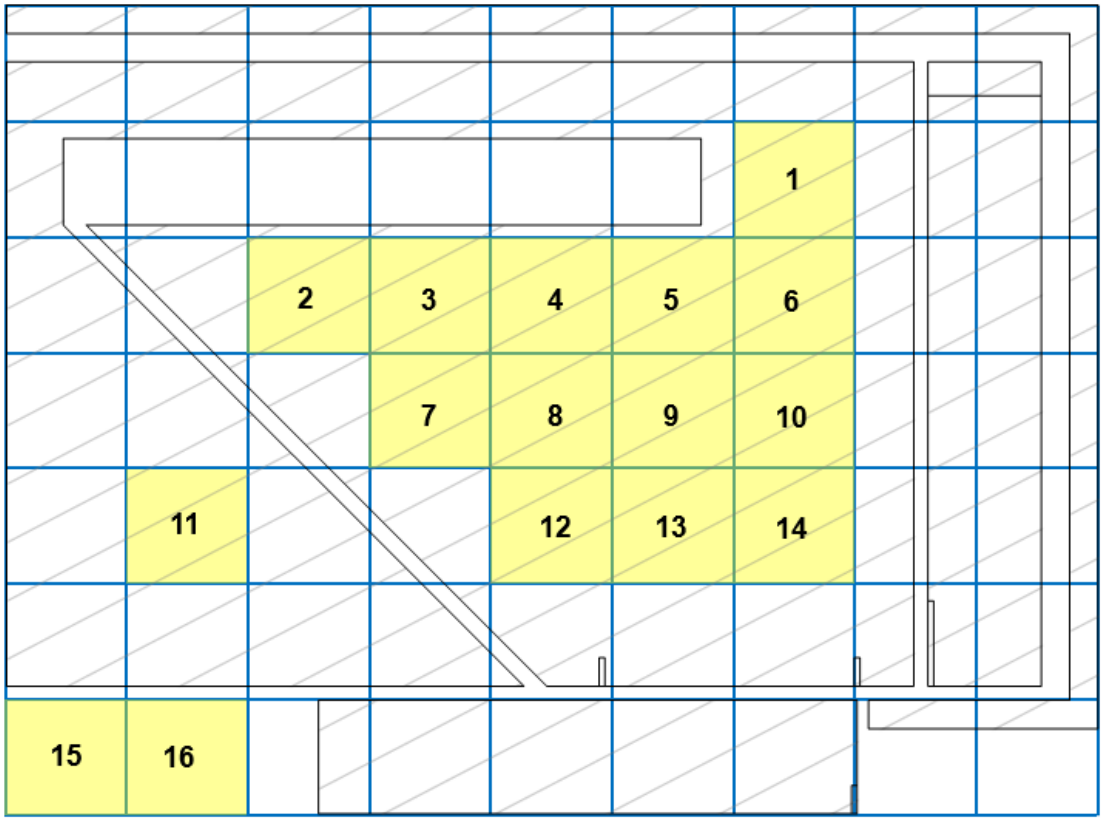

iii. Grid G_1

The quadband antenna feed for the lowest frequency operation is closest to the bottom right corner ("feed point corner") of the *antenna rectangle*, so as discussed *supra* §V.E.1.b grid G_1 is placed from the bottom right corner below. Ciais-Quadband, Fig. 1(a) ("feeding strip of main patch"); EX1001, 18:16-54; Weide, ¶197. Grouping four G_2 cells (blue grid lines) into a single G_1 cell results in the 4 x 5 grid G_1 shown below (orange grid lines). EX1001, 18:55-61; Weide, ¶198.

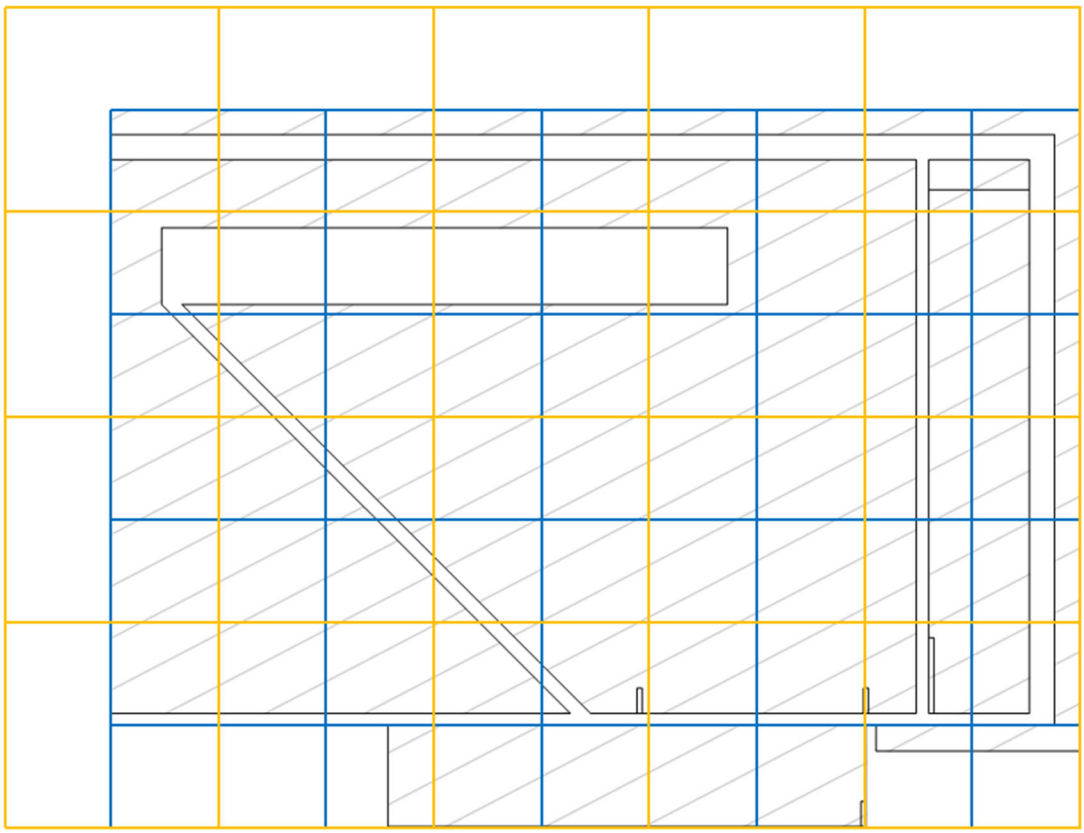

iv. N_1 = 19

A single cell within G_1 (yellow below) does ***not*** "include at least a point of the antenna contour." *Supra* §V.E.2.a; EX1001, 19:1-7; Weide, ¶198. Thus, the G_1 cell count $\boldsymbol{N_1} = (20 - 1) = 19$. Weide, ¶198.

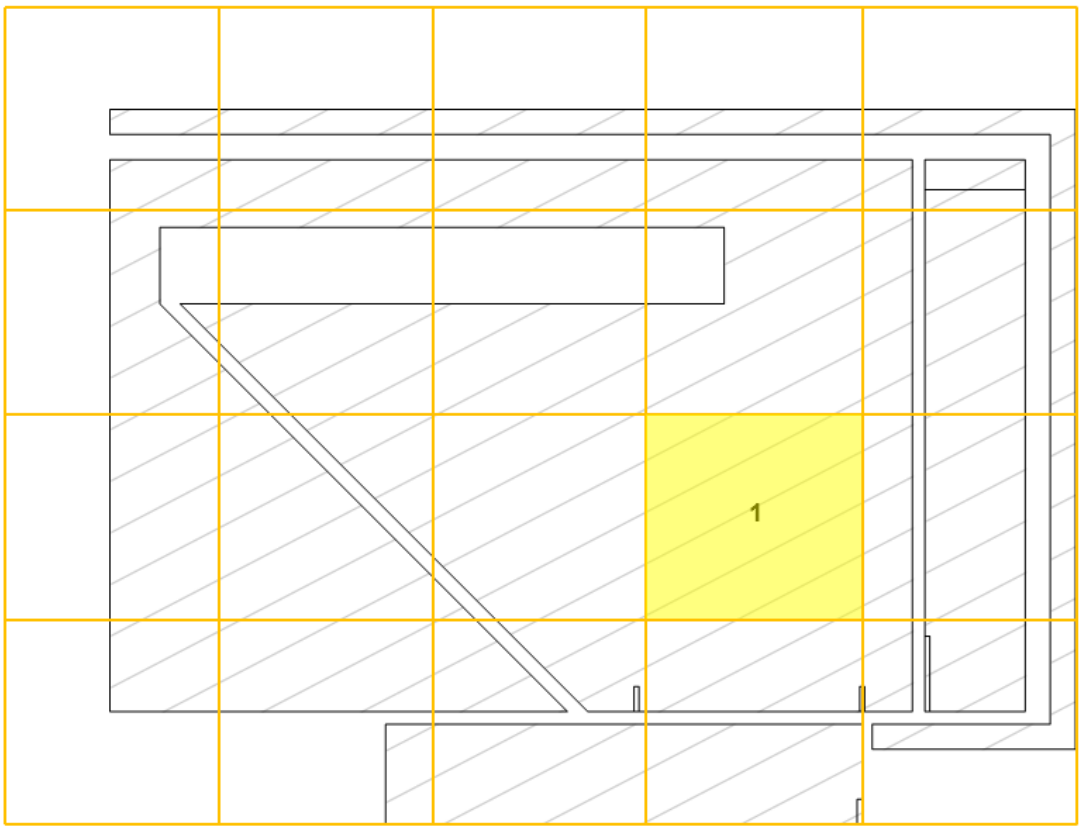

v. Calculation F_{21} = 1.31

The *complexity factor* F_{21} for the quadband *antenna contour* is thus:

$$\boldsymbol{F_{21}} = -\left(\frac{\log(N_2) - \log(N_1)}{\log(1/2)}\right) = -\left(\frac{\log(47) - \log(19)}{(-1)\log(2)}\right)$$

$$= \left(\frac{\log(47/19)}{\log(2)}\right) = \left(\frac{0.393}{0.301}\right) = 1.31.$$

Supra §V.E.2.a; EX1001, 19:8-14; Weide, ¶199.

b. Calculating F_{32}

i. Grid G_3

Grid G_3 is 14 rows by 18 columns (e.g., twice as many rows and columns as G_2) so that a single *G2* cell (blue outline) contains four G_3 cells (green outline). *Supra* §V.E.1.c; EX1001, 19:51-60. The G_3 cells have width $\left(\frac{38.5mm}{18}\right) = 2.139$ mm and height $\left(\frac{28.5mm}{14}\right) = 2.036$ mm. Weide, ¶200.

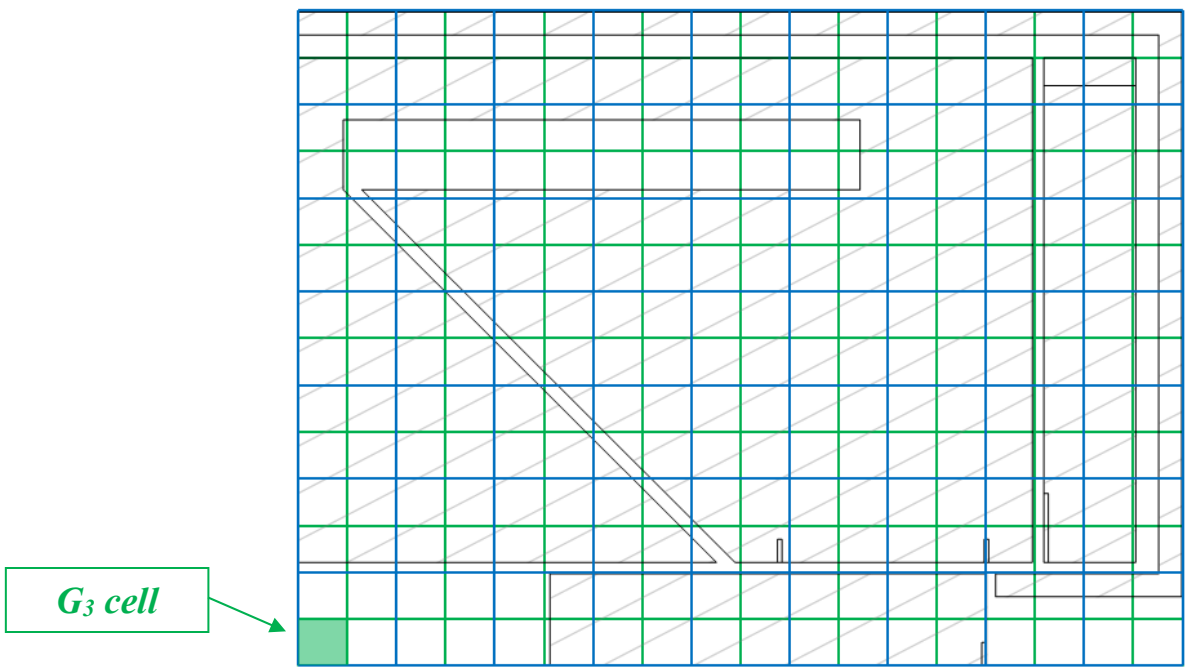

ii. $N_3 = 140$

As shown below 112 numbered G_3 cells do ***not*** "include at least a point of the antenna contour." *Supra* §V.E.2.b; EX1001, 19:61-67; Weide, ¶¶201-212. Thus, the G_3 cell count $\boldsymbol{N_3} = (252 - 112) = 140$. Weide, ¶201.

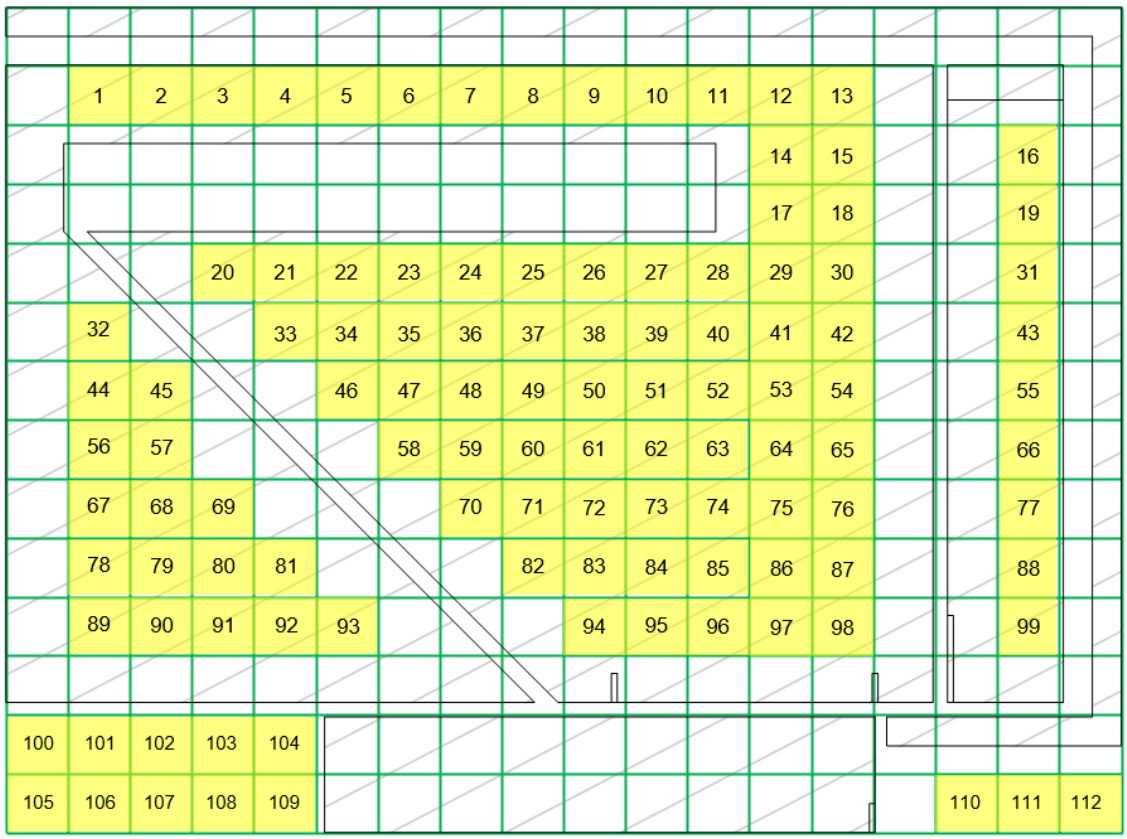

The top edge of cells numbered 1-13 is 2.036 mm (a G_3 cell height) from the top of the *antenna rectangle*. The nearest *antenna contour* edge is 2 mm from the top of the *antenna rectangle* and thus lies above and is ***not included*** in cells 1-13. Ciais-Quadband, Fig. 1(b), 148; Weide, ¶204.

iii. Calculation F_{32} = 1.57

The *complexity factor* F_{32} for the quadband *antenna contour* is thus:

$$\boldsymbol{F_{32}} = -\left(\frac{\log(N_3) - \log(N_2)}{\log(1/2)}\right) = -\left(\frac{\log(140) - \log(47)}{(-1)\log(2)}\right)$$

$$= \left(\frac{\log(140/47)}{\log(2)}\right) = \left(\frac{0.474}{0.301}\right) = 1.57.$$

Supra §V.E.2.b; EX1001, 20:1-5; Weide, ¶213.

8. Limitation [1.g]

1.g	a second antenna within the wireless device and configured to support at least one frequency band different from the at least three frequency bands supported by the first antenna,

Dou+Ciais-Quadband meets [1.g] at least two ways. As explained *supra* §VI.C (combination), Dou+Ciais-Quadband comprises Dou's GPS antenna (1575 MHz) and an antenna for WiFi and Bluetooth (ISM 2.4 GHz). Dou, [0022], [0040].

a. Case 1: "*second antenna*" is Dou GPS

Dou+Ciais-Quadband meets [1.g] wherein Dou's GPS antenna is the *second antenna* because the 1575 frequency band for GPS L1 is not covered by and is different from any communication band covered by the Ciais quadband antenna. Ciais-Quadband, Fig. 3, 148-149; Weide, ¶¶214-215.

b. Case 2: "*second antenna*" is Dou WiFi/Bluetooth

Dou+Ciais-Quadband meets [1.g] wherein Dou's antenna for WiFi and Bluetooth is the *second antenna* because the Ciais quadband antenna does not cover the 2400-2500 MHz (e.g., 2.4 GHz ISM band) used by WiFi or Bluetooth. Ciais-Quadband, Fig. 3, 148-149; Weide, ¶216.

9. Limitation [1.h]

1.h	the second antenna being arranged completely within the ground plane rectangle.

Dou+Ciais-Quadband meets [1.h] for each mapping of a "*second antenna*" in [1.g].

Dou describes antenna 208, mounted over ground plane 210, within the "*ground plane rectangle*" defined by the perimeter of PCB 204, covering frequencies for GPS and WiFi/Bluetooth. Dou, Figs. 2A-2B, [0022]. Thus, in that embodiment, Dou shows that it was conventional to provide GPS and WiFi/Bluetooth coverage with an antenna mounted over a ground plane and thus within a "*ground plane rectangle*." Weide, ¶218.

EX1029 also describes a GPS antenna (64), WLAN antenna 61, and Bluetooth antenna 66 disposed on a PCB 20. EX1029, Fig. 9 (below), [0044] (GPS antenna **64**, WLAN antenna **61**, Bluetooth antenna **66**); Weide, ¶219.

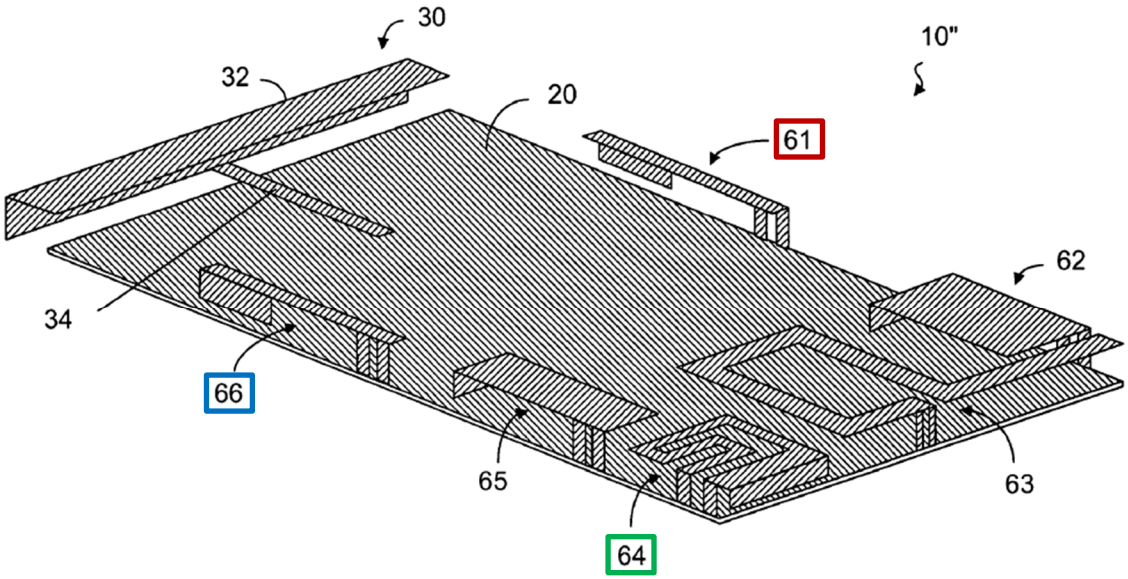

FIG. 9

EX1029 explains that PCB 20 ("printed wire board (PWB 20)") is a ground plane. EX1029, [0035] ("PWB 20 with a ground plane"), [0038] (same), [0047] ("the ground plane (PWB)"). EX1029 confirms that it was conventional to dispose a GPS antenna and a WiFi (WLAN) or Bluetooth antenna over a rectangular ground plane (e.g., spanning the back of the PCB as taught in Ciais), and hence within a ground plane rectangle defined by the ground plane's boundary. Weide, ¶220.

Thus, Dou+Ciais-Quadband would have arranged Dou's GPS and WiFi and Bluetooth antennas "*completely within the ground plane rectangle*" meeting [1.h] because this was conventional and Dou describes arranging antennas for those frequencies over a ground plane. Weide, ¶221.

E. Claim 2

2	[Claim 1's device], wherein the first antenna contour comprises at least 20 segments.

Dou+Ciais-Quadband's "*first antenna*" (the Ciais quadband antenna) meets claims 2 because the *antenna contour* has "*at least 20 segments*" (claim 2). Weide, ¶222.

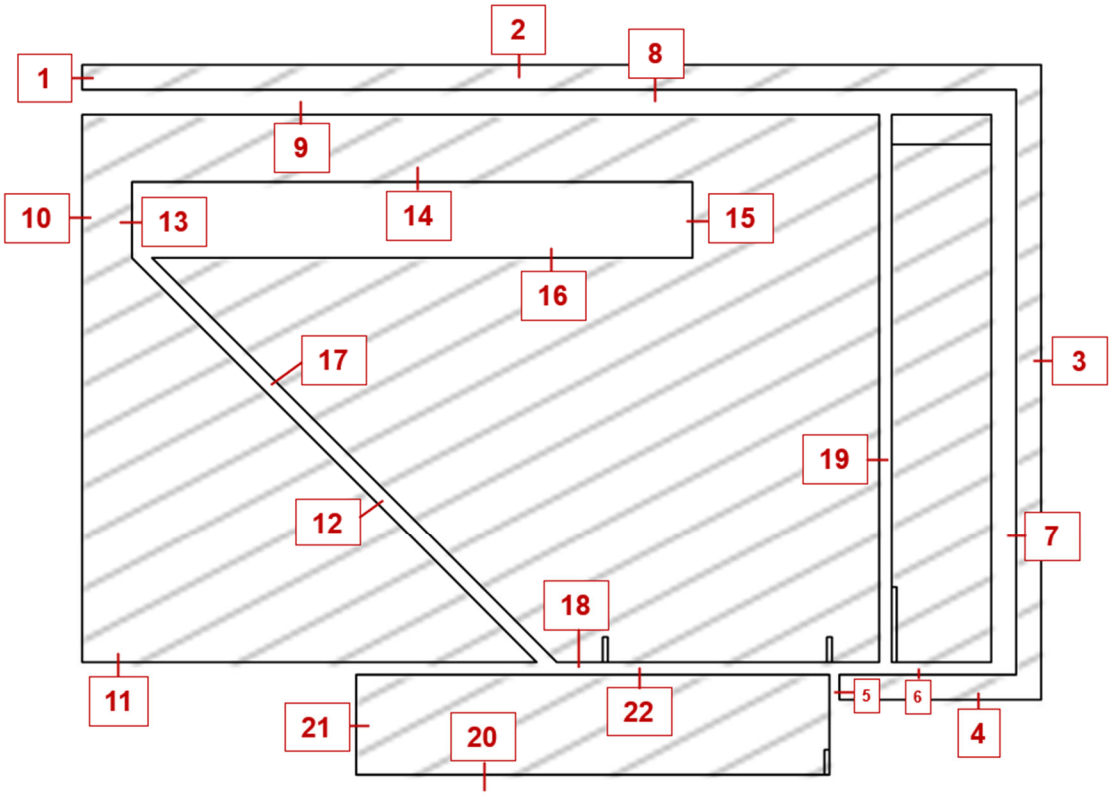

F. Claim 3

3	[Claim 2's device], wherein the perimeter of the first antenna contour comprises at least 35 segments.

Using Fractus's analysis in its litigation against Geotab, Dou+Ciais-Quadband's "*first antenna*" has at least 35 segments. Wiede, ¶¶223-224; *see* IPR2025-01026, Paper 4 (Geotab's petition) at 61.

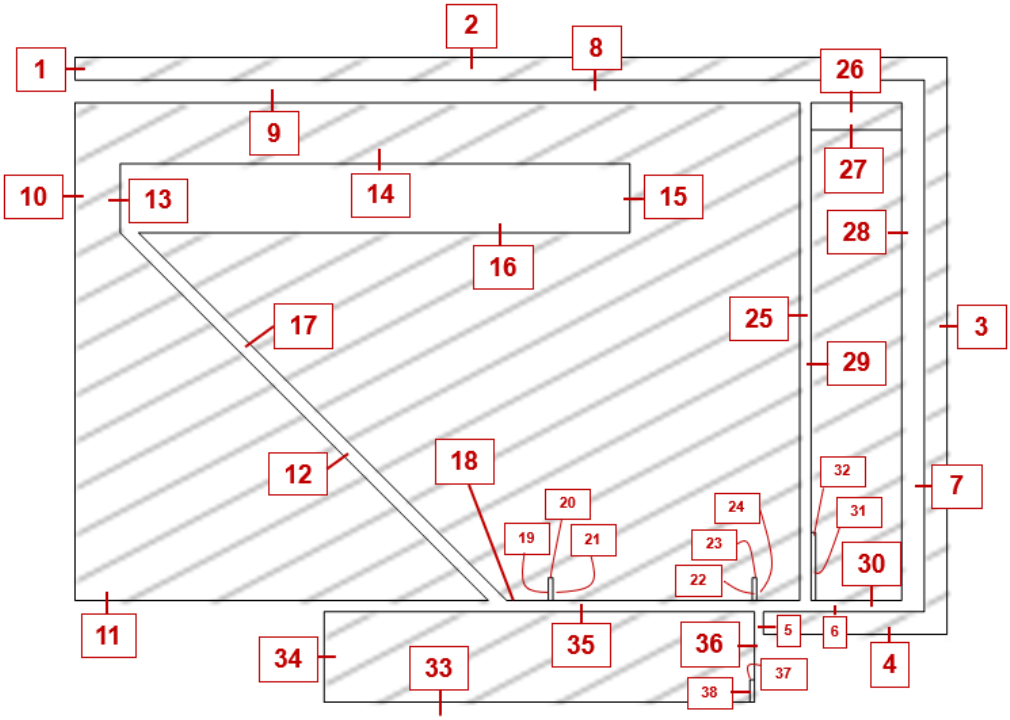

G. Claim 4

4	[Claim 1's device], wherein the antenna system comprises a third antenna configured to receive signals employing a 4G communication standard.

Dou+Ciais-Quadband meets claim 4 at least two ways.

First, Dou+Ciais-Quadband uses a Ciais quadband antenna as antenna 208. The quadband antenna is "*configured to receive signals employing a 4G communication standard*" as explained *supra* §VI.D.5 ([1.d]). Thus, Dou+Ciais-Quadband meets claim 4 wherein the second Ciais quadband antenna, implementing Dou antenna 208, is the "*third antenna*." Weide, ¶226.

Second, Dou+Ciais-Quadband comprises a Dou WiFi/Bluetooth antenna. *Supra* §VI.C (combination). The '677 patent expressly describes WiFi as a "4G service" having a corresponding "*4G standard*" (EX1001, 25:1-6). Thus, Dou+Ciais-Quadband meets claim 4 wherein Dou's WiFi antenna is the "*third antenna*." Weide, ¶227.

H. Claim 5

5.a	[Claim 4's device], wherein the third antenna defines an antenna contour comprising an entire perimeter of the third antenna, and
5.b	wherein the antenna contour of the third antenna has a level of complexity defined by complexity factor F_{21} having a value of at least 1.2 and a complexity factor F_{32} having a value of at least 1.35.

Dou+Ciais-Quadband meets claim 5 when the Ciais quadband antenna (Dou antenna 208) is mapped to the "*third antenna*" because the quadband has an "*entire perimeter*" that defines an *antenna contour* (*supra* §VI.D.6 ([1.e])) with $F_{21} > 1.2$ and $F_{32} > 1.35$ as explained *supra* §VI.D.7 ([1.f]). Weide, ¶228.

I. Claim 6

1. Preamble [6.PRE], [6.a]-[6.f]

Claim 6 repeats many limitations from claim 1. Dou+Ciais-Quadband meets [6.PRE] and [6.a]-[6.f] for the reasons it meets [1.PRE] and [1.a]-[1.f], respectively, as explained *supra* §§VI.D.1-VI.D.7. EX1028, 1-2; Weide, ¶229.

Dou+Ciais-Quadband meets the remaining claim 6 limitations as follows.

Limitation

2. Limitation [6.g]

6.g	a second antenna within the wireless device and defining a second antenna contour comprising an entire perimeter of the second antenna,

Dou+Ciais-Quadband's Ciais quadband antenna that implements Dou antenna 208 within the wireless device (*supra* §VI.D.4 ([1.c]) defines a "*second antenna contour comprising an entire perimeter of the second antenna*" for the reasons the first Ciais quadband antenna (Dou antenna 206) meets [1.e] *supra* §VI.D.6.

3. Limitation [6.h]

6.h	the second antenna being proximate to a second short side of the ground plane rectangle that is opposite to the first short side of the ground plane rectangle,

Dou+Ciais-Quadband's antenna 208 ("*second antenna*") is positioned along (*proximate to*) "*a second short side*" of PCB 204 that is opposite to the first short

side, which is also the "*second short side of the ground plane rectangle*." *Supra* §VI.D.6 ([1.e]); Dou, Fig. 2A, [0016]-[0017]; Weide, ¶232.

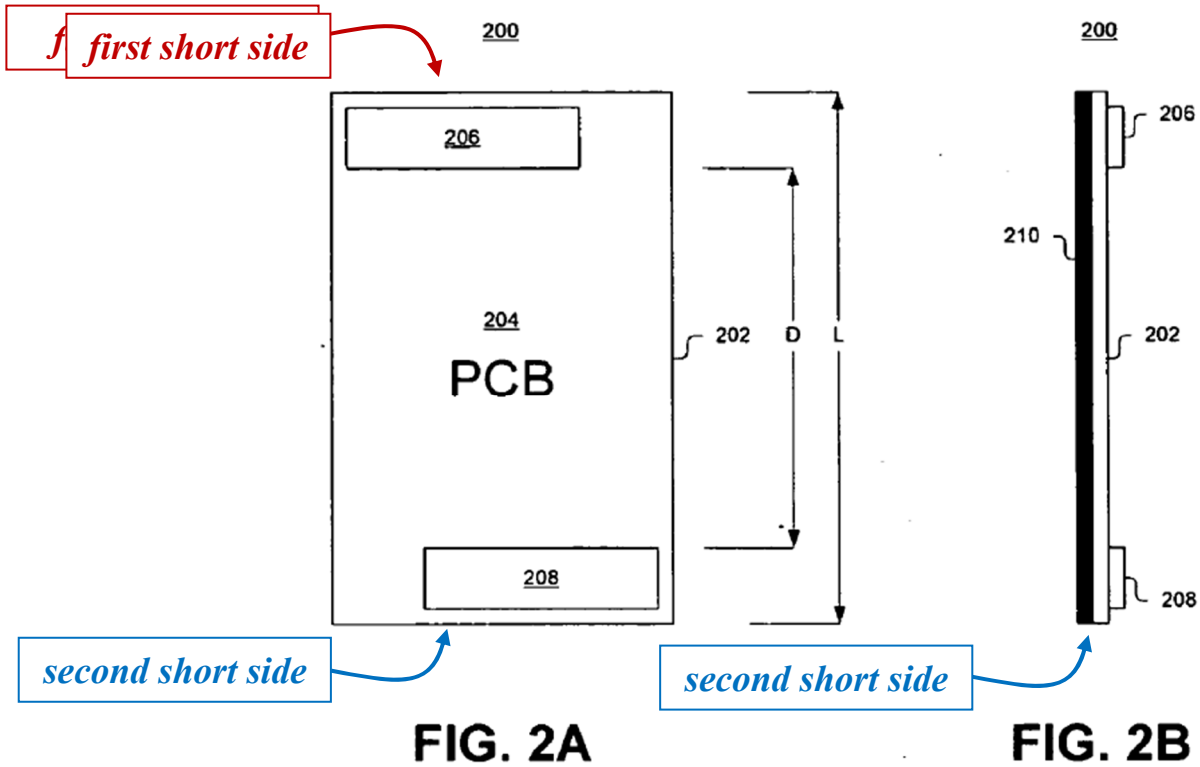

4. Limitation [6.i]

6.i	a minimum-sized parallelepiped of rectangular faces that completely encloses a volume of the second antenna defining an antenna box, and

Dou+Ciais-Quadband meets [6.i] because it has an "*antenna box*" defined by "*a minimum-sized parallelepiped of rectangular faces that completely encloses a volume of the*" Ciais quadband antenna ("*second antenna*") as shown by the dotted red outline in Ciais-Quadband Fig. 1(a) (annotated below). Weide, ¶233.

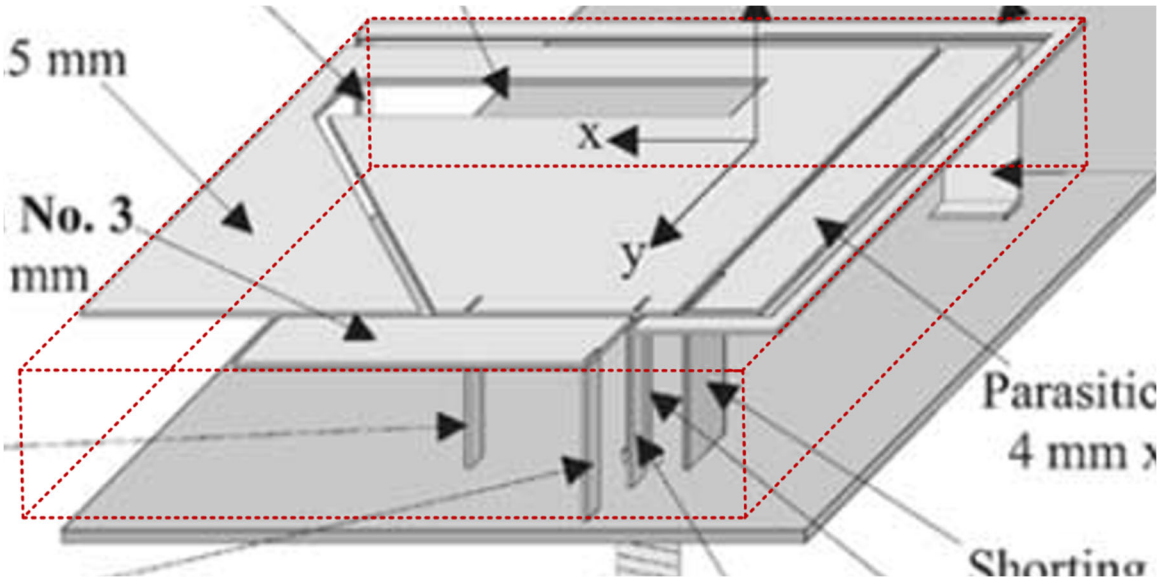

5. Limitation [6.j]

6.j	an orthogonal projection of the antenna box along a normal to a face with a largest area of the second antenna defining an antenna rectangle,

Limitation [6.j] recites in part the specification's "*antenna contour*" definition as shown in the claim construction *supra* §V.D. Dou+Ciais-Quadband meets [6.j] because the second Ciais quadband antenna has an "*antenna contour*" formed by this orthogonal projection step through the quadband antenna "main patch" as explained *supra* §VI.D.6 ([1.e]). Weide, ¶234.

6. Limitation [6.k]

6.k	wherein a length of the second antenna contour is greater than four times a diagonal of the antenna rectangle.

Dou+Ciais-Quadband's *second antenna* (the quadband antenna) has a 38.5 mm × 28.5 mm *antenna rectangle* with a diagonal of $((38.5)^2 + (28.5)^2)^{0.5} =$ 47.9 mm, and 4×47.9 mm $= 191.6$ mm. Weide, ¶235.

The quadband antenna contour is longer than 191.6 mm, meeting [6.k]. The segments bounding regions A, B, and C ***alone*** (denoted below) are 240.2 mm > 191.6 mm long. Ciais-Quadband, Fig. 1(b); Weide, ¶236.

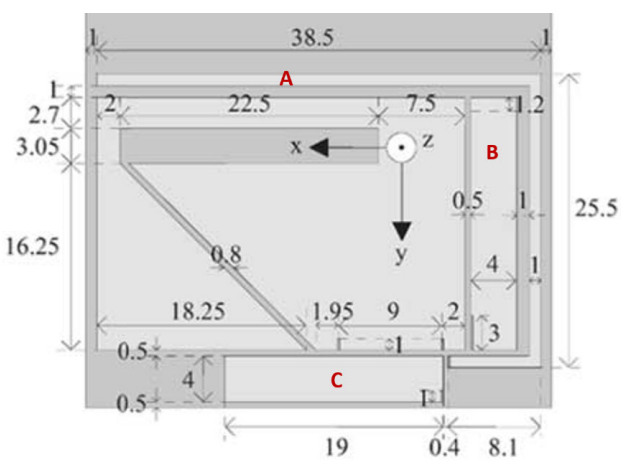

Region	Feature	mm
A	top leg	38.5
		37.5
		1
	right leg	25.5
		23.5
	bottom leg	8.1
		1
		7.1
B	top	4
	bottom	4
	sides	22
		22
C	top	19
	bottom	19
	sides	4
		4
	TOTAL:	**240.2**

J. Claims 7-8

7	[Claim 6's device], wherein the first antenna contour comprises at least 20 segments.
8	[Claim 7's device], wherein the first antenna contour comprises at least 35 segments.

Dou+Ciais-Quadband meets claim 7 for the reasons it meets claim 2 *supra* §VI.E.

Dou+Ciais-Quadband meets claim 8 because for Ciais's quadband antenna the "*antenna contour*" has "*at least 35 segments*" (claim 3) as shown below. Weide, ¶238.

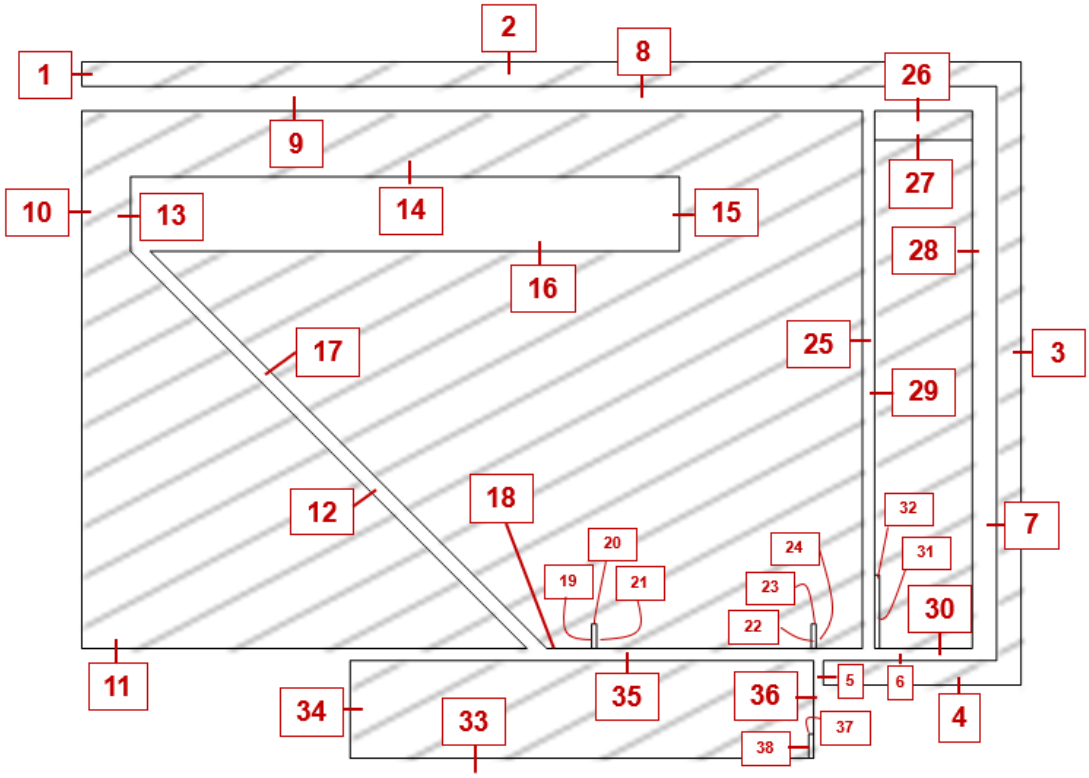

K. Claim 9

9	[Claim 6's device], wherein the second antenna contour has a level of complexity defined by complexity factor F_{21} having a value of at least 1.2 and a complexity factor F_{32} having a value of at least 1.35.

The "*second antenna*" is a Ciais quadband antenna. *Supra* §VI.I.2 ([6.g]). Dou+Ciais-Quadband meets claim 9 for the reasons the Ciais quadband antenna meets the same *complexity factor* limitations in [5.b] (where the Ciais quadband antenna is mapped to a "third antenna"). *Supra* §VI.H (claim 5); Weide, ¶239.

VII. GROUND 2: DOU+CIAIS-QUADBAND+NAKANO RENDERS OBVIOUS CLAIMS 1-20

A. References

1. Nakano (EX1012)

Nakano describes a WLAN [wireless local area networking] antenna for use "inside mobile phone handsets." Nakano, 2417. The antenna extends from a ground plate that "backs a radiation element (patch element)," and covers WLAN bands at "2.45 GHz" (e.g., 2400-2500 MHz) and 5.2 GHz. Nakano, 2417, 2419, Fig. 4; Weide, ¶240.

2. Dou+Ciais-Quadband+Nakano

A POSA would have had reasons to use Ciais's quadband antenna to implement Dou's antennas 206 and 208, alongside Dou's GPS antenna, as explained *supra* §VI.C. A POSA would have had reasons to use Nakano's WLAN antenna in Dou—instead of the Dou WiFi/Bluetooth antenna in Dou+Ciais-

Quadband—because Nakano's antenna covered the 5.2 GHz band as used by IEEE Std. 802.11a, in addition to the "2.45 GHz" (2400-2500 MHz) ISM band used by IEEE Std. 802.11b and Bluetooth (which Dou's antenna covered). EX1042, 3 (802.11a uses 5.15-5.35 GHz band), 26 (Table 88 showing channels in 5 GHz bands); EX1043, 49-50 (802.11b defines channels between 2400 and 2484 MHz); EX1044, 27 ("Bluetooth devices operate in the unlicensed 2.4 GHz ISM [] band."); Weide, ¶241. Nakano's dual-frequency WLAN antenna met an "increasing demand for wireless communications" (Nakano, 2417). The market demand gave POSAs reasons to include Nakano's antenna in Dou's wireless device. Weide, ¶242.

Nakano's InvFL extends from a "co-planar ground plate" on the short side of a rectangular "card-type structure." Nakano, 2517, Fig. 1; Weide, ¶¶. A POSA would have preserved this placement in Dou's wireless device by placing the InvFL antenna coplanar with ground plane 210 (Dou, Fig. 2B) and extending it from the ground plane as shown below, similar to Dou's Figure 3B laterally offsetting antenna 308 below ground plane 310. Dou, Figs. 2A-2B (modified below), 3B, [0016]-[0017]; Weide, ¶243.

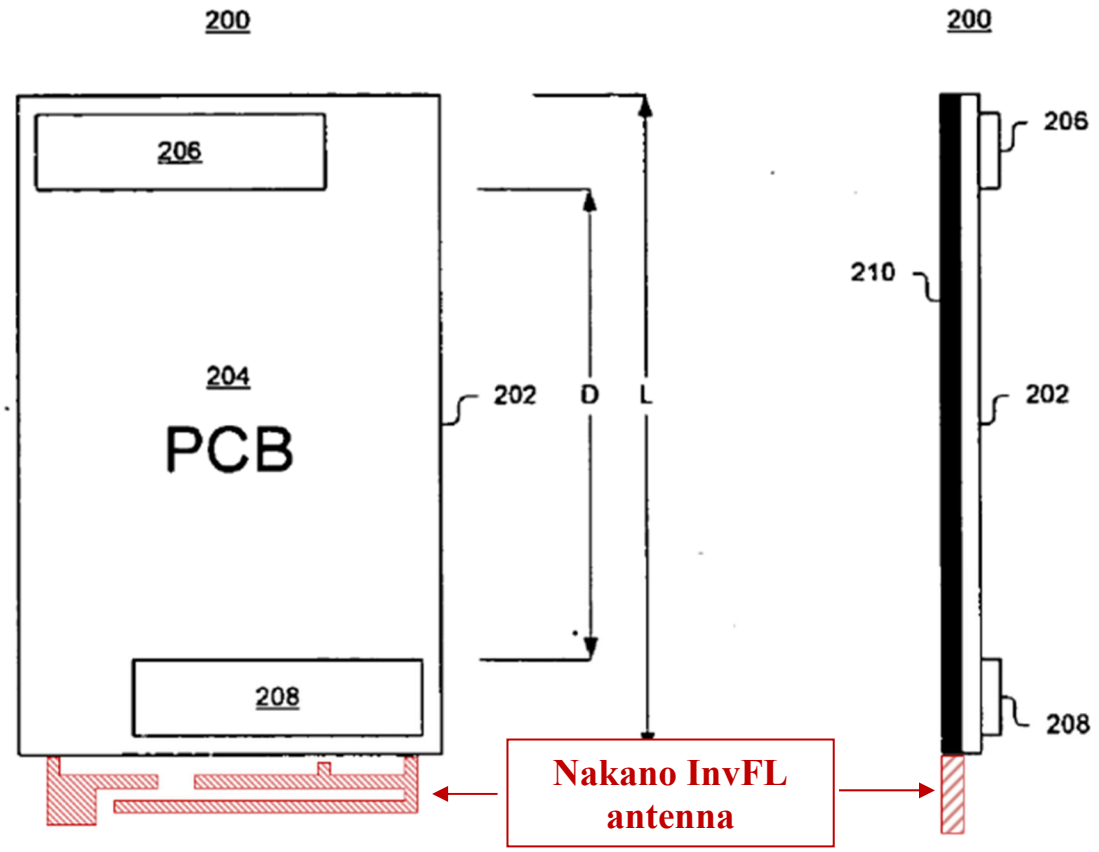

A POSA would have had a reasonable expectation of success in combining Ciais and Nakano's teachings with Dou (hereinafter "Dou+Ciais-Quadband+Nakano") for the reasons explained *supra* §VI.C, and because Nakano's antenna was designed for internal use in "mobile phone handsets" like Dou's wireless device. Nakano, 2417; Weide, ¶244. Combining multiple antennas within a single wireless device was conventional and within the POSA's ordinary skill. *Supra* §VI.C; EX1029, Fig. 9; Weide, ¶244.

B. Claims 1-5

Dou+Ciais-Quadband+Nakano meets claims 1-5 for the reasons Dou+Ciais-Quadband meets them as explained *supra* §§VI.D (claim 1)-VI.H (claim 5), wherein Nakano's InvFL antenna replaces Dou's WiFi/Bluetooth antenna in Dou+Ciais-Quadband. Weide, ¶245.

C. Claims 6-9

Dou+Ciais-Quadband+Nakano meets claims 6-9 for the reasons Dou+Ciais-Quadband meets them, as explained *supra* §§VI.I (claim 6)-VI.K (claim 9), wherein Dou's antenna 206 is a first Ciais quadband antenna ("*first antenna*"), Dou's antenna 208 is a second Ciais quadband antenna ("*second antenna*"), and—as noted above—Nakano's InvFL antenna replaces Dou's WiFi/Bluetooth antenna in Dou+Ciais-Quadband. Weide, ¶246.

D. Claim 10

10	[Claim 6's device], wherein the antenna system comprises a third antenna configured to provide wireless connectivity in at least two frequency bands.

Dou+Ciais-Quadband+Nakano meets the additional limitations in claim 10 because Nakano's InvFL antenna ("*third antenna*") provides WLAN ("*wireless connectivity*") in the 2400-2500 MHz ISM band for IEEE Std. 802.11b and Bluetooth, and in the 5150-5250 MHz and 5250-5350 MHz bands for IEEE Std.

802.11a (which Dou calls "5.2 GHz" band). Nakano, Fig. 4, 2417, 2419; Weide, ¶247.

E. Claim 11

1. Limitation [11.a]

11.a	[Claim 10's device], wherein the third antenna defines a third antenna contour comprising an entire perimeter of the third antenna, and

Dou+Ciais-Quadband+Nakano meets [11.a] wherein Nakano's inverted FL ("InvFL") antenna is the "*third antenna*" because Nakano's InvFL antenna defines a *third antenna contour* comprising the *entire perimeter* of the InvFL antenna. *Supra* §§V.A, V.C, V.D. Nakano's contour is based on Figure 1(b) (detail below) and the dimensions provided in the caption to Figure 4. Nakano, 2417, 2419, Fig. 1(b); Weide, ¶¶248-251.

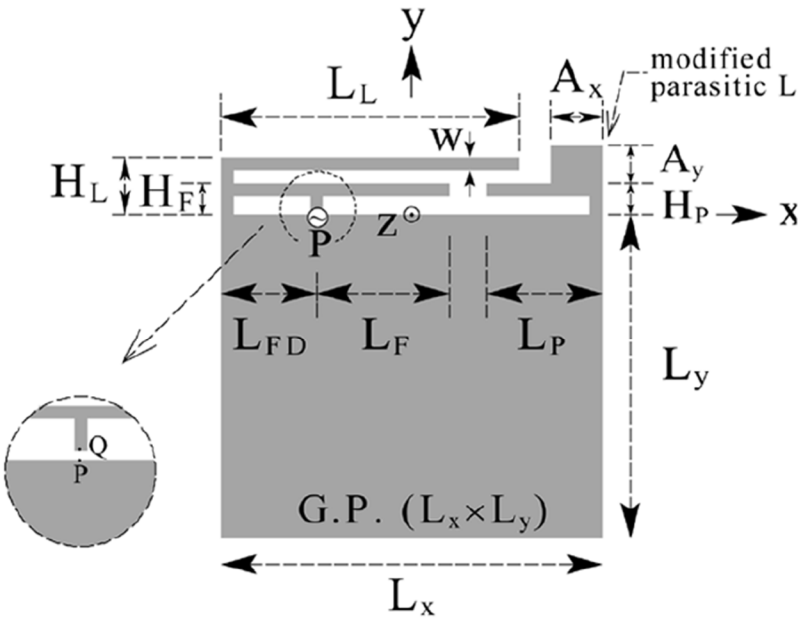

(b)

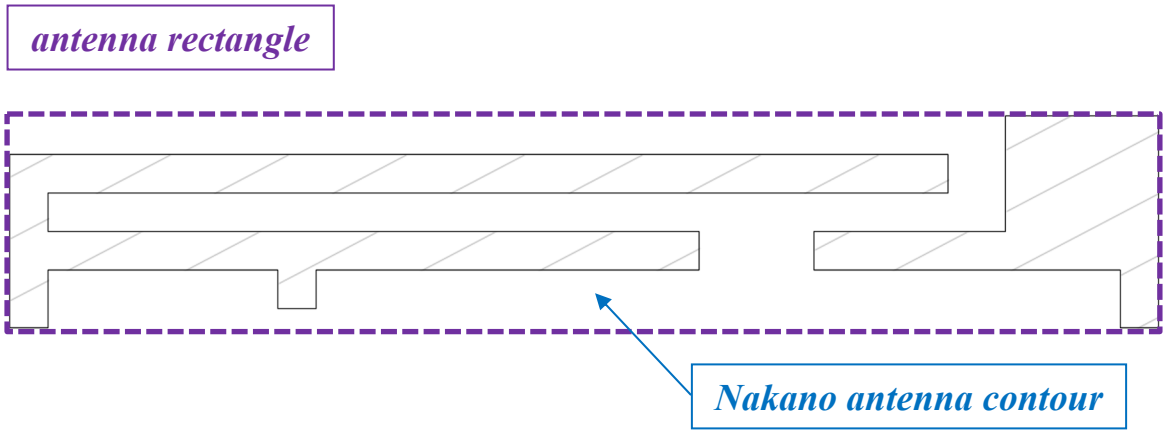

2. Limitation [11.b]

11.b	wherein the third antenna contour has a level of complexity defined by complexity factor F_{21} having a value of at least 1.20 and complexity factor F_{32} having a value of at least 1.35.

Dou+Ciais-Quadband+Nakano meets [11.b] because as shown below, the InvFL antenna contour ("*third antenna contour*") meeting [11.a] has *complexity factor* F_{21} = 1.49 ("*at least 1.20*") and F_{32} = 1.46 ("*less than 1.75*"). Weide, ¶252.

a. Calculating F_{21}

i. Grid G_2

Nakano's InvFL antenna has a 30 mm × 5.5 mm antenna rectangle (purple outline below). Weide, ¶253.

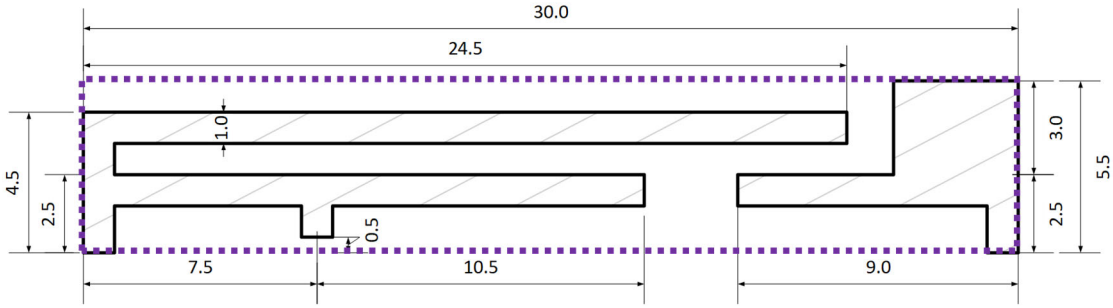

The ’677 specification states that grid G_2 is formed by tessellating the antenna contour with an odd number of rows and columns. EX1001, 17:18-22. As the ADT court recognized, “a skilled artisan would not understand the patent to *require* G2 to be constructed using 9 columns. To the contrary, the patents expressly contemplate the use of a different number of columns.” EX1020, 27 (emphasis in original); *see also* EX1001, 17:18-22 (“the size of a cell and its aspect ratio… are first chosen so that the antenna rectangle is perfectly tessellated with an odd number of columns and an odd number of rows.”); 17:39-42 (explaining “setting to nine (9) the number of columns that tessellate the antenna rectangle

provides an advantageous compromise, for the preferred sizes of [a wireless device],” but omitting any measurements for those “preferred sizes”).

Here, a grid G_2 with **15 columns** yields a cell width $\left(\frac{30\ mm}{15}\right) = 2$ mm. Weide, ¶255.

Setting an odd number of “2n+1” rows with integer n such that $0 < n < 5$ yields these results, where aspect ratio is the ratio of cell width to cell height (EX1001, 17:65-67):

# rows	cell height (mm)	aspect ratio
3	$\left(\frac{5.5\ mm}{3}\right) = 1.83$	$\left(\frac{2}{1.83}\right) = 1.09$
5	$\left(\frac{5.5\ mm}{5}\right) = 1.1$	$\left(\frac{2}{1.1}\right) = 1.82$

Therefore **three** rows provides grid cells “as square as possible,” e.g., an aspect ratio closest to one. *Supra* §V.E.1.a (claim construction); EX1001, 16:62-65, 17:18-64; Weide, ¶¶. Thus, grid G_2 with **fifteen (15) columns** and **three (3) rows** has cells “as square as possible[.]” Weide, ¶¶256-257.

ii. N_2 = 45

Below the 3 x 15 grid G_2 (blue outline) tessellates the *antenna rectangle* bounding the quadband *antenna contour*. Weide, ¶¶. Each cell “include[s] at least a point of the antenna contour,” so that the G_2 cell count $\boldsymbol{N_2} = 45$. *Supra* §V.E.2.a; EX1001, 19:1-7; Weide, ¶258.

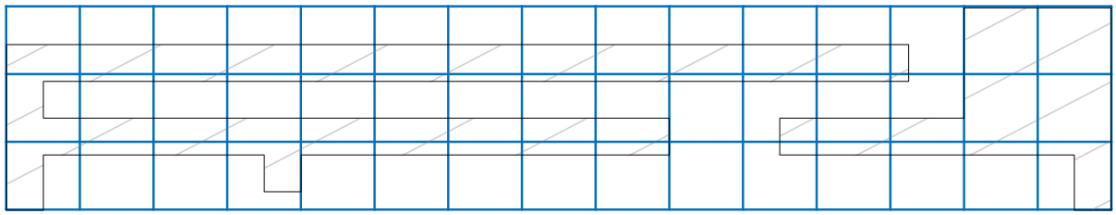

iii. Grid G_1

The InvFL antenna feed for the lowest frequency operation at point Q is closest to the bottom left corner ("feed point corner") of the *antenna rectangle*. Nakano, Fig. 1, 2417-2418 ("feed point location L_{FD}"). Grouping four G_2 cells (blue grid lines) into a single G_1 cell results in the 2 x 8 grid G_1 shown below (orange grid lines). Weide, ¶259.

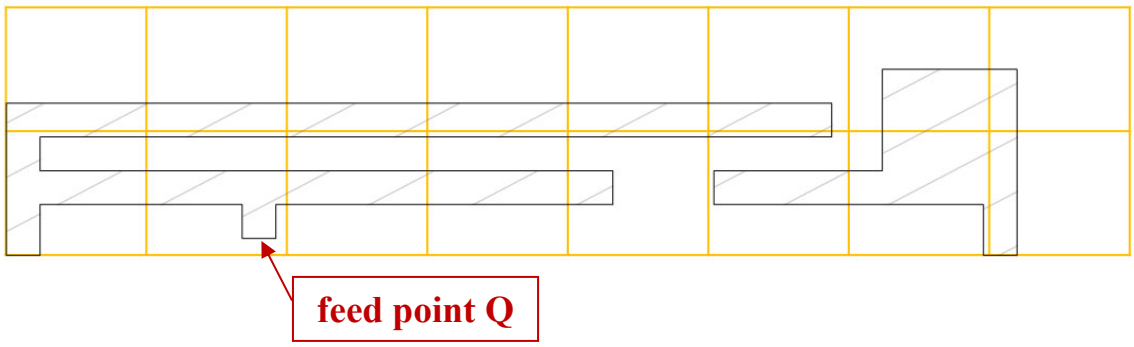

iv. N_1 = 16

Each G_1 cell "include[s] at least a point of the antenna contour." *Supra* §V.E.2.a; EX1001, 19:1-7. Thus, the G_1 cell count $\boldsymbol{N_1} = 16$. Weide, ¶260.

v. Calculation F_{21} = 1.49

The *complexity factor* F_{21} for the InvFL *antenna contour* is thus:

$$\boldsymbol{F_{21}} = -\left(\frac{\log(N_2) - \log(N_1)}{\log(1/2)}\right) = -\left(\frac{\log(45) - \log(16)}{(-1)\log(2)}\right)$$

$$= \left(\frac{\log\left({}^{45}/_{16}\right)}{\log(2)} \right) = \left(\frac{0.449}{0.301} \right) = 1.49.$$

Supra §V.E.2.a; EX1001, 19:8-14; Weide, ¶261.

b. Calculating F_{32}

i. Grid G_3

Grid G_3 is 6 rows by 30 columns so that four G_3 cells comprise a single G_2 cell. *Supra* §V.E.1.c; EX1001, 19:51-60. The G_3 cells have width $\left(\frac{30\ mm}{30}\right) =$ 1 mm and height $\left(\frac{5.5mm}{6}\right) = 0.917$ mm. Weide, ¶262.

ii. $N_3 = 124$

As shown below 56 G_3 cells (shaded yellow) do ***not*** "include at least a point of the antenna contour." *Supra* §V.E.2.b; EX1001, 19:61-67; Weide, ¶¶263-272. Thus, the G_3 cell count $\boldsymbol{N_3} = (180 - 56) = 124$. Weide, ¶263.

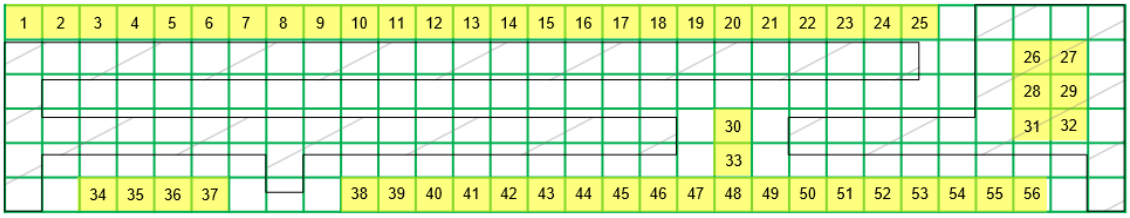

The horizontal *antenna contour* segment at top left is 1 mm from the top of the *antenna rectangle* and thus not contained within cells numbers 1-25, which only extend 0.917 mm from the top of the *antenna rectangle*. Weide, ¶265.

iii. Calculation F_{32} = 1.46

The *complexity factor* F_{32} for the quadband *antenna contour* is thus:

$$\boldsymbol{F_{32}} = -\left(\frac{\log(N_3) - \log(N_2)}{\log(1/2)}\right) = -\left(\frac{\log(124) - \log(45)}{(-1)\log(2)}\right)$$

$$= \left(\frac{\log\left(124/45\right)}{\log(2)}\right) = \left(\frac{0.440}{0.301}\right) = 1.46.$$

Supra §V.E.2.b; EX1001, 20:1-5; Weide, ¶273.

F. Claim 12

1. Preamble [12.PRE], Limitations [12.a]-[12.b], [12.d]-[12.f]

Claim 12 repeats many limitations from previous claims. Dou+Ciais-Quadband+Nakano meets [12.PRE]-[12.b] and [12.d]-[12.f] for the same reasons Dou+Ciais-Quadband meets the corresponding limitations below, wherein Dou antenna 206 is a Ciais quadband antenna ("*first antenna*"). EX1028, 4-5; Weide, ¶274.

Limitation	Corresponding Limitation	Discussed (*supra*)
[12.PRE]	[1.PRE]	§VI.D.1
[12.a]	[1.a]	§VI.D.2
[12.b]	[1.b]	§VI.D.3
[12.d]	[1.d]	§VI.D.5
[12.e]	[1.e]	§VI.D.6
[12.f]	[1.f]	§VI.D.7

Dou+Ciais-Quadband+Nakano meets the remaining limitations in claim 12 as follows.

2. Limitation [12.c]

12.c	a first antenna within the wireless device and configured to provide operation in at least four frequency bands, at least one of the at least four frequency bands is contained within a first frequency range and at least one other of the four frequency bands is contained within a second frequency range,

Dou+Ciais-Quadband+Nakano meets [12.c] because Ciais's quadband antenna (*first antenna*) is disposed within Dou's device and is "*configured to provide operation*" in at least **25** frequency bands as explained *supra* §VI.D.4 ([1.c]). The quadband antenna covers a *first frequency range* **870-960 MHz** (supporting at least 4 frequency bands) and a *second frequency range* **1710-2170 MHz** (supporting at least 21 frequency bands). *Id.*

3. Limitation [12.g]

12.g	wherein the first antenna is configured to transmit and receive signals from a 4G communication standard; and

Dou+Ciais-Quadband+Nakano meets [12.g] because the Ciais quadband antenna is operable to "*transmit and receive*" signals that correspond to a "*4G communication standard*" as explained *supra* §VI.D.5 ([1.d]), and for the reasons that the quadband antenna (as a *third antenna* in claim 4) meets claim 4 (*receive signals…*) *supra* §VI.G. *Supra* §V.G (claim construction); Ciais-Quadband,148 ("antenna ***can operate*** from 880 to 960 MHz and 1710-2170 MHz"); Weide, ¶277.

4. Limitation [12.h]

12.h	a second antenna within the wireless device and configured to receive signals from a 4G communication standard,

Dou+Ciais-Quadband+Nakano meets [12.h] because Nakano's InvFL antenna (*second antenna*) covers (*is configured to receive signals*) "2.45 GHz" (e.g., 2400-2500 MHz) and 5.2 GHz, which are "frequencies used for wireless LAN communications." Nakano, 2417; Weide, ¶278. The WLAN standards (e.g., EX1042 (IEEE Std. 802.11a), EX1043 (IEEE Std. 802.11b))—which are used for "WiFi" (EX1001, 25:1-6)—are "*4G communication standards*" (*supra* §V.G.1), as Fractus argued in litigation (*supra* §V.G.2). EX1001, 10:14-23 ("WiFi (IEEE802.11 standards)"); 25:1-18 (WiFi is "4G service" corresponding to a "4G standard[]").

5. Limitation [12.i]

12.i	a minimum-sized parallelepiped of rectangular faces that completely encloses a volume of the second antenna defining an antenna box,

Limitation [12.i] recites the specification's definition of "*antenna box*." *Supra* §V.B. Dou+Ciais-Quadband+Nakano meets [12.i] because a POSA could define an "*antenna box*" comprising "*a minimum-sized parallelepiped of rectangular faces that completely encloses a volume*" of Nakano's InvFL antenna with planar dimensions as described in Nakano and thickness of a conventional ground plate (e.g., the thickness of Dou's ground plane 210). Weide, ¶279.

6. Limitation [12.j]

12.j	an orthogonal projection of the antenna box along a normal to a face with a largest area of the second antenna defining an antenna rectangle,

Limitation [12.j] recites the specification's definition of "*antenna rectangle*." *Supra* §V.C. Dou+Ciais-Quadband+Nakano meets [12.j] because Nakano's InvFL antenna has an "*antenna contour*" as explained *supra* §VII.E.1 ([11.a]), and the *antenna contour* is bounded by an *antenna rectangle* and is formed by *orthogonal projection* through the *antenna box* meeting [12.i]. Weide, ¶280.

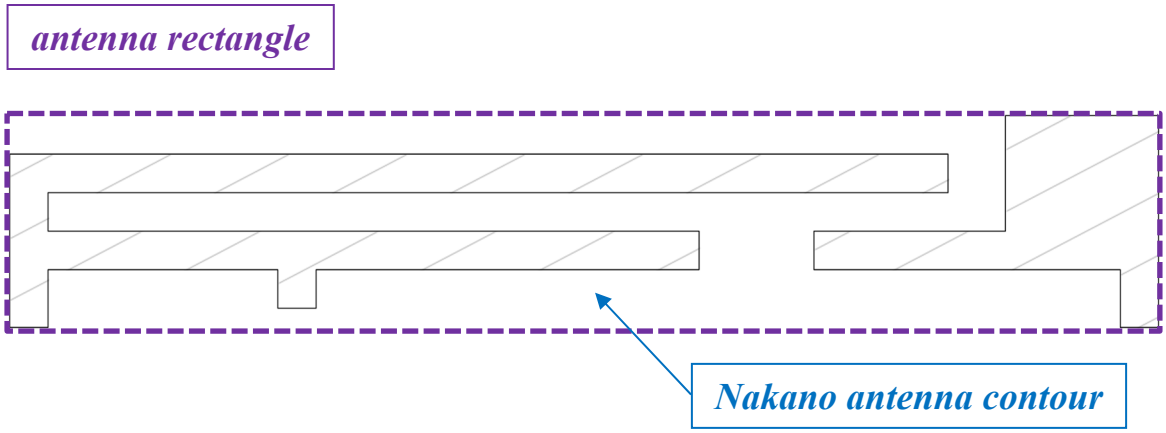

7. Limitation [12.k]

12.k	an aspect ratio of the antenna rectangle being defined as a ratio between a width and a height of the antenna rectangle, and wherein the aspect ratio has a value of at least 2.

Dou+Ciais-Quadband+Nakano meets [12.k] because the InvFL antenna's 30 mm × 5.5 mm *antenna rectangle* (purple outline below) has an "*aspect ratio*" $\left(\frac{30}{5.5}\right) = 5.45 > 2$. Nakano, Fig. 1, 2417-2418; Weide, ¶281.

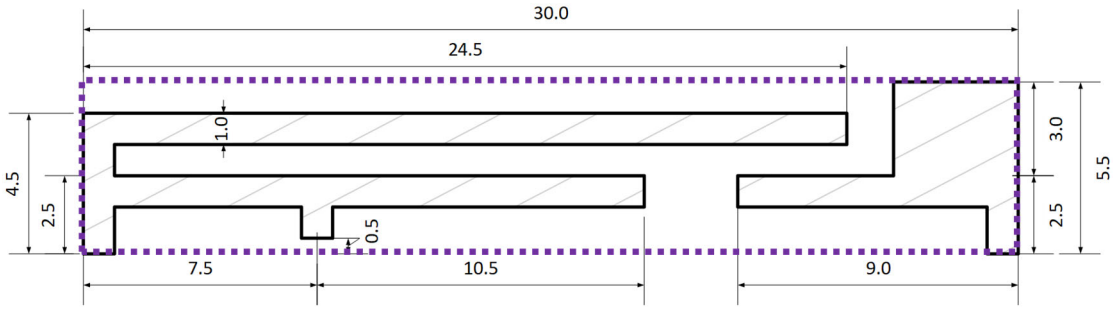

G. Claims 13-14

13	[Claim 12's device], wherein the first antenna contour comprises at least 20 segments.
14	[Claim 13's device], wherein the first antenna contour comprises at least 35 segments.

Dou+Ciais-Quadband+Nakano meets claim 13 for the same reasons that Dou+Ciais-Quadband meets claim 2, *supra* §VI.E. It meets claim 14 for the reasons Dou+Ciais-Quadband meets the additional limitations in claim 8, *supra* §VI.J.

H. Claim 15

15	[Claim 12's device], wherein the second antenna is proximate to a second short side of the ground plane rectangle that is opposite to the first short side of the ground plane rectangle.

Dou+Ciais-Quadband+Nakano meets claim 15 because Nakano's InvFL extends from a "co-planar ground plate" on the "*short side*" of a rectangular "card-type structure." Nakano, 2417, Fig. 1; Weide, ¶283. A POSA would have preserved this placement in Dou's wireless device by placing the InvFL antenna coplanar with ground plane 210 (Dou, Fig. 2B) and extending it from the "*second short side*" of the *ground plane rectangle* (which is *opposite to the first short side*) enclosing the ground plane, similar to Dou's Figure 3B laterally offsetting antenna

208 below ground plane 310. *Supra* §VI.D.6 ([1.e]); Dou, Figs. 2A-2B (modified below), [0016]-[0017]; Weide, ¶283.

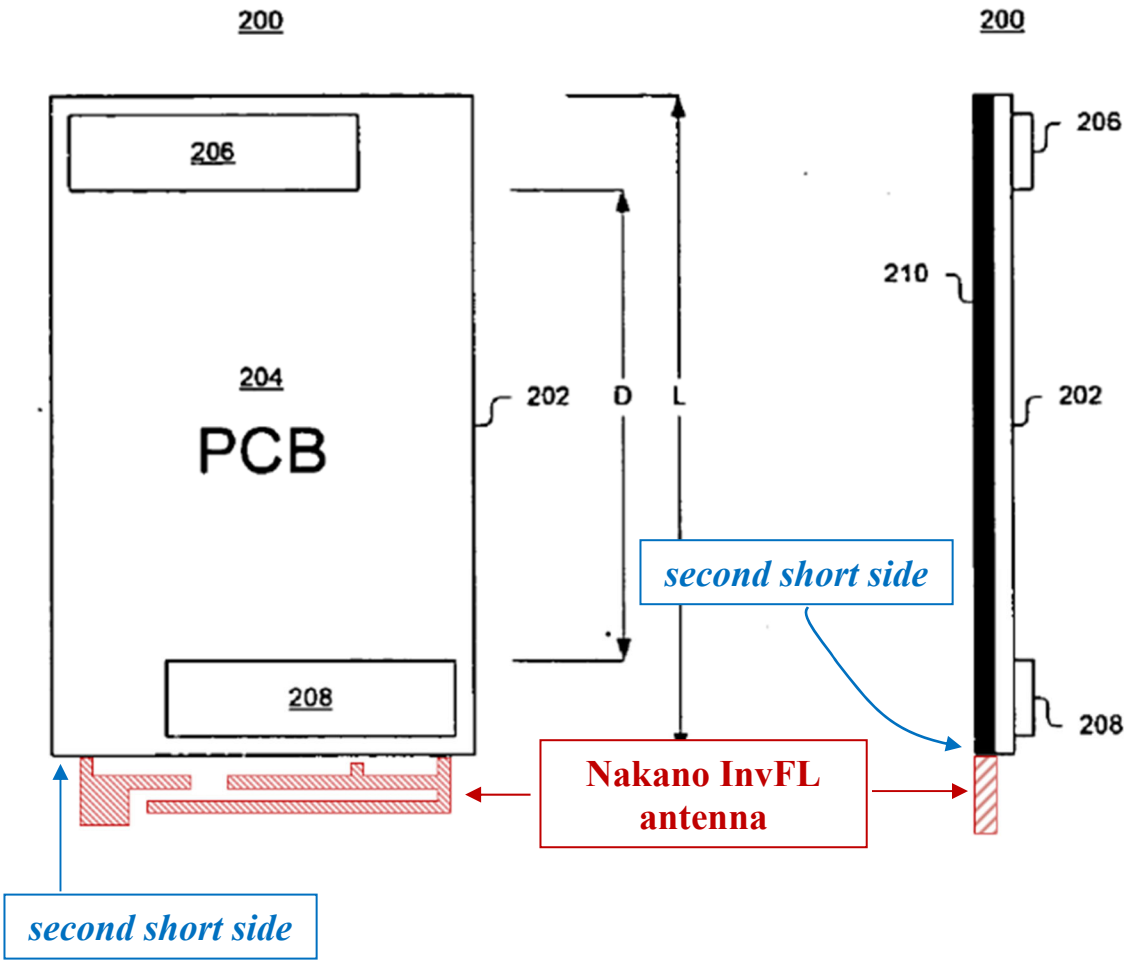

I. Claim 16

16.a	[Claim 12's device], wherein the second antenna defines a second antenna contour comprising an entire perimeter of the second antenna, and
16.b	wherein the second antenna contour has a level of complexity defined by complexity factor F_{21} having a value of at least 1.20 and complexity factor F_{32} having a value of at least 1.35.

Claim 16 depends from claim 12 and repeats the antenna limitations in claim 11. Dou+Ciais-Quadband+Nakano meets the claim 16 and limitations [16.a], [16.b] for the reasons that Nakano's InvFL antenna (as claim 16's "*second antenna*") meets claim 11 and limitations [11.a] and [11.b] (as claim 11's "*third antenna*") *supra* §VII.E.

J. Claim 17

17	[Claim 16's device], wherein the second antenna contour comprises at least 20 segments.

Dou+Ciais-Quadband+Nakano meets claim 17 because the InvFL antenna ("*second antenna*) has an *antenna contour* with more than 20 segments as shown below. Weide, ¶285.

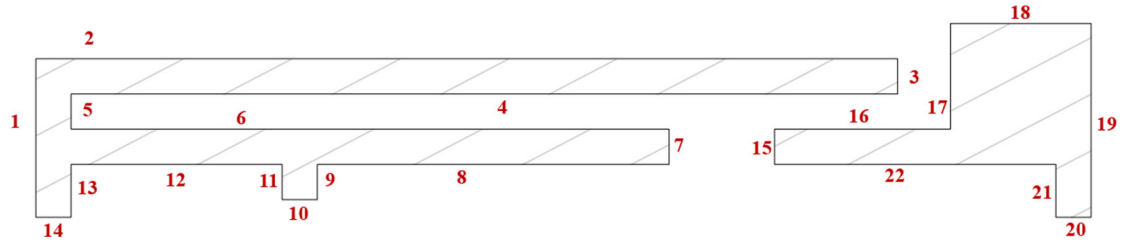

K. Claim 18

18	[Claim 12's device], wherein the antenna system comprises a third antenna configured to provide wireless connectivity in at least two frequency bands.

Dou+Ciais-Quadband+Nakano meets claim 18 because it implements Dou's antenna 208 with a second Ciais quadband antenna ("*third antenna*"). *Supra* §VII.A.2 (combination). The quadband antenna provides "*wireless connectivity*" in at least 25 frequency bands as explained *supra* §VI.D.4 ([1.c]).

L. Claim 19

19.a	[Claim 18's device], wherein the third antenna defines a third antenna contour comprising an entire perimeter of the third antenna, and
19.b	wherein the third antenna contour has a level of complexity defined by complexity factor F_{21} having a value of at least 1.20 and complexity factor F_{32} having a value of at least 1.35.

Claim 19 repeats the additional limitations in claim 5. EX1028, 10. Dou+Ciais-Quadband+Nakano meets claim 19 for the same reasons it meets claim 5 *supra* §VI.H, wherein the second Ciais quadband antenna is the "*third antenna*."

M. Claim 20

20	The wireless device of claim 18, wherein the third antenna is proximate to a third side of the antenna rectangle being orthogonal to the first short side.

Claim 20 depends from claim 18, which depends from claim 12. The antecedent for "*antenna rectangle*" is the ***second*** (e.g., Nakano's InvFL) antenna's *antenna rectangle* in Limitation [12.j] *supra* §VII.F.6.

Claims 18 and 12 provide no antecedent basis for claim 20's "*side*" of "*the* [Nakano InvFL] *antenna rectangle*" or for "*the first short side*."

Regardless, Dou+Ciais-Quadband+Nakano meets claim 20 under any reasonable construction. If "*the first short side*" refers to a short side of Dou's PCB 204 or a *ground plane rectangle* that it defines, then Dou antenna 208 (the second Ciais quadband antenna or "*third antenna*") is disposed adjacent ("*proximate*") to a ***long*** edge of the PCB as shown below, and—because the PCB is a rectangular—the long edge is orthogonal to the "short" edge. *Supra* §§VII.A.2 (combination), VII.E.1 ([11.a], InvFL *antenna rectangle*). Weide, ¶290.

If "*the first short side*" refers to a short side of the InvFL antenna's *antenna rectangle*, then Dou antenna 208 is disposed adjacent ("*proximate*") to the long edge of the InvFL *antenna rectangle*, which is parallel to the short edge of PCB 204. Weide, ¶290.

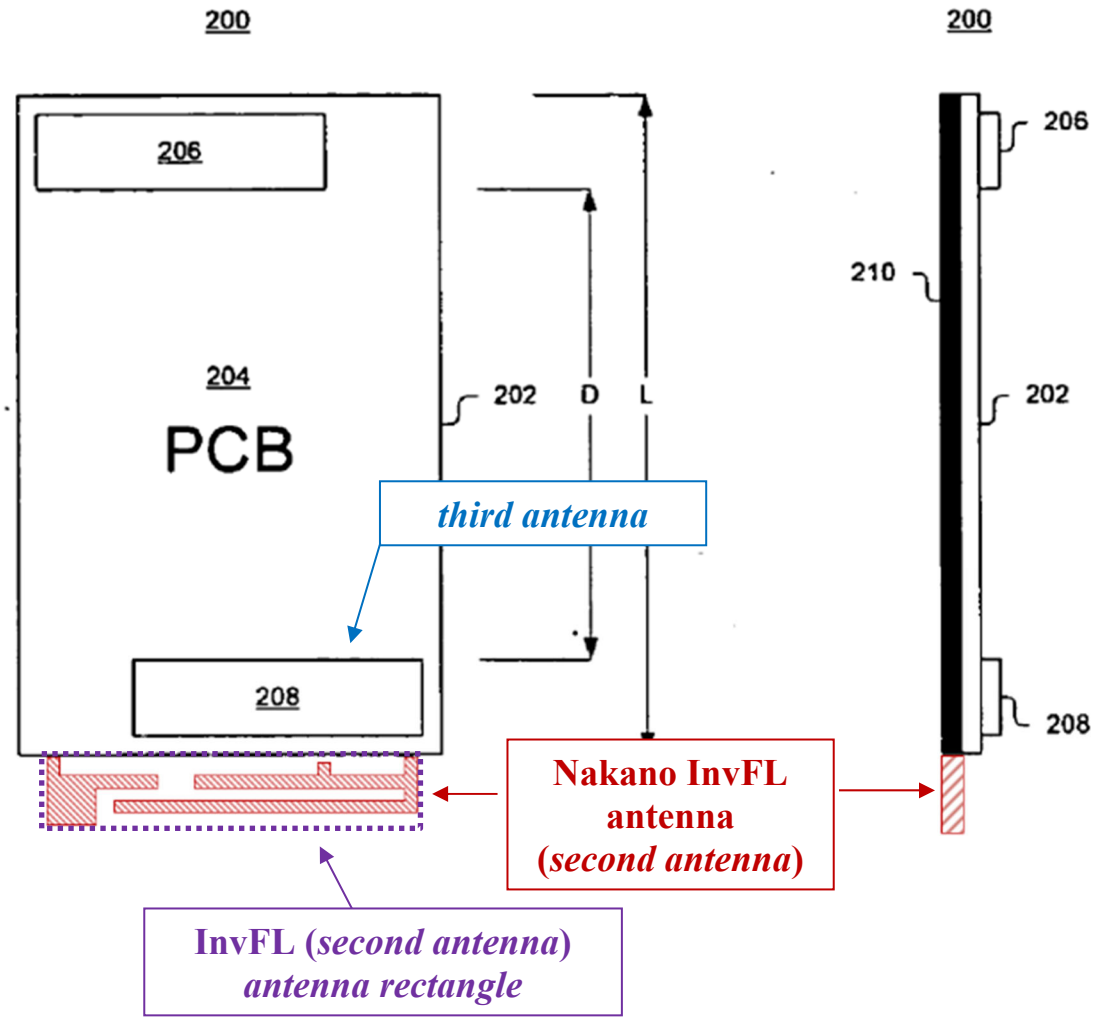

VIII. GROUND 3: BALIARDA-543 ANTICIPATES AND/OR RENDERS OBVIOUS CLAIMS 1-5 AND 12-20

A. Claims 1-5 and 12-20 Are Not Entitled To Priority Before April 7, 2014.

The '677 patent is a continuation of, *inter alia*, Application No. 11/614,429 ("the '429 application") (EX1001, code (63)), filed December 21, 2006, published January 24, 2008 (EX1040, U.S. Patent Pub. No. 2008/018543, "Baliarda-543").

For any Challenged Claim to be entitled to the ’429 application’s filing date, the ’429 application must provide written description supporting that claim. *Arthrex v. Smith & Nephew*, 35 F.4th 1328, 1343 (Fed. Cir. 2022).

Written description requires that the disclosure within the four corners of ’429 application “reasonably conveys to [a POSA] that the inventor had possession of the [later-claimed] claimed subject matter as of the filing date,” e.g., December 21, 2006. *Regents of the Univ. of Cal. v. Broad Inst.*, No. 22-1653, slip op., 24 (Fed. Cir. May 12, 2025); *Ariad Pharms. v. Eli Lilly*, 598 F.3d 1336, 1351 (Fed. Cir. 2010) (en banc) (“The test requires an objective inquiry into the four corners of the specification from the perspective of a [POSA] to show that the inventor actually invented the invention claimed.”) (cleaned up).

The written description must support the full scope of the claimed subject matter. *Arthrex*, 35 F.4th at 1343-1344 (no written description supporting full scope of “first member including ***an eyelet***” where priority document failed to describe a flexible eyelet); *Rivera v. Int’l Trade Comm’n*, 857 F.3d 1315, 1319-1321 (Fed. Cir. 2017) (specification “did not provide the necessary written description support for the ***full breadth*** of the asserted claims” where claims were broadly drawn to a “container… adapted to hold brewing material” but the specification only disclosed a “pod adapter assembly” or “receptacle” designed to hold a “pod”), 1322 (“The specification here does not teach a container with an

integrated filter, and so, does not provide written description support for such a container[.]"); *ICU Medical v. Alaris Med. Sys.*, 558 F.3d 1368, 1377-78 (Fed. Cir. 2009) (no written description for full scope of "a needleless connector valve comprising a body and a seal" without "any spike limitation" where priority document only described medical valves ***with*** spikes); *Google LLC v. Valtrus Innovations Ltd.*, IPR2022-01406, Paper 40, 60-61 (Apr. 3, 2024) (no written description supporting full scope of "computing domains" where priority document provided no description of virtual machines).

In December of 2006, there were discussions ongoing about 4G but what a 4G communication system would look like was undefined. Only years later did ITU's IMT-Advanced in Report ITU-R M.2134, adopted November 2008, define the requirements for a 4G communication system. EX1046; Wiede, ¶299. An LTE communication ***standard*** was not defined until years after the '429 application was filed. EX1025; EX1026, 7 (LTE specification completed March 2009); Weide, ¶299. In litigation, Fractus argued that the claimed "*4G communication standard*" is met by LTE. *Supra* §V.G.2. The Board should hold Fractus to its litigation position that an LTE band is a "*frequency band associated with a 4G communication standard*," which is fatal to the patentability of the claims challenged in Ground 3 for reasons explained below. *Supra* §V.G.2.

The ’429 application provides no written description supporting the full scope of a “*frequency band… associated with a 4G communication standard*” ([1.d]), “*antenna configured to receive signals employing a 4G communication standard*” (claim 4), or “*antenna… configured to transmit and receive signals from a 4G communication standard*” ([12.h]) when the “*4G communication standard*” is interpreted to encompass LTE. The ’429 application provides no description of LTE, LTE frequency bands, or the 3GPP Technical Specification 36.101 V8.4.0 (2008-12)—published years ***after*** the ’429 application’s filing—that defines LTE and its frequency bands. Baliarda-543; EX1025; EX1026, 7 (LTE specification completed in March 2009); EX1039, 497-502; Weide, ¶301.

On December 21, 2006, the LTE frequency bands ***had not even been defined*** and what frequency ranges they might eventually use was an “open issue.” EX1038 (February 2007 report), 112 (“Open issues… Is the evolved access system envisioned to work on new and/or existing frequency band?”); EX1037 (November 2006 report), 108 (same); EX1036 (June 2006 report), 84 (same); EX1039, 497-502 (LTE frequency bands); EX1025 (December 2008 document defining LTE bands), EX1026, 7 (LTE specification completed in March 2009); Weide, ¶¶302-307.

Indeed, LTE band 12 (699-716 MHz uplink and 728-746 MHz downlink, EX1039, 498 (Table 20.1))—whose uplink portion Fractus ***expressly relies upon***

for meeting limitation [1.f] in its complaint in the Geotab Litigation (EX1024, 21)—is part of a frequency range (698-806 MHz) that ***was not even available for use with mobile communications*** (let alone LTE) until WRC-07 in October-November 2007—***nearly a year after*** Fractus's December 21, 2006 filing date for the '429 application. EX1041, 1 (WRC-07 took place in Geneva, Switzerland between October 22 and November 16, 2007); EX1039, 501 ("20.1.2 New frequency bands… ***WRC-07 identified additional frequency bands*** for IMT, which encompasses both IMT-2000 and IMT-Advanced. ***Several bands were defined by WRC-07*** that will be available partly or fully for deployment on a global basis:… ***698-806 MHz was allocated to mobile service*** and identified to IMT to some extent in all regions. Together with the band 806-960 MHz identified at WRC-2000, it forms a wide frequency range from 698 to 960 MHz that is partly identified to IMT in all regions, with some variations."); Weide, ¶308. Within this 698-806 MHz range defined for mobile communications at WRC-07, LTE bands 12, 13, and 14 (EX1039, 498 (Table 20.1)) were "defined for operation mainly for US allocations." EX1039, 501; Weide, ¶309.

Moreover in July 2007—before WRC-07—the spectrum at 698-806 MHz (spanning the frequencies where LTE bands 12, 13, and 14 were later defined) ***was occupied by television broadcasters*** in TV Channels 52-69. EX1045, 3. In other words, when PO filed the '429 application on December 21, 2006 the 698-806

MHz frequency range ***was not available*** for use in ***any*** cellular communication, let alone LTE or 4G communication. Weide, ¶310.

Because the LTE frequency band definition was an "open issue" and the frequency ranges for LTE bands had not been selected, a POSA reading the '429 application on December 21, 2006 would have concluded that the applicants did ***not*** possess a wireless device with an antenna configured to support an LTE frequency band (a "*frequency band[]… associated with a 4G communication standard*") or "*configured to transmit and receive*" LTE signals ("*signals from a 4G communication standard*"), let alone one that also met the complexity factors and other requirements of the Challenged Claims. Weide, ¶311. On December 21, 2006, when the '429 application was filed, no one could have determined whether any antenna disclosed in the application was configured to support a "*frequency band[] associated with*" LTE, or to send/receive LTE signals, because the LTE frequency bands had not yet even been defined. Weide, ¶312.

A POSA would have concluded that the applicants did not possess an antenna configured to send or receive signals in the 698-806 MHz spectrum—including the LTE band 12 that Fractus relies upon in litigation—for communication with any "*4G communication standard*" because those frequencies were not usable for any mobile device communications at the time of filing. Weide, ¶313. In short, the applicants did not possess, and the priority documents

cannot "describe," claimed subject matter—antennas sending and receiving signals using LTE protocols on LTE frequency bands, neither of which existed at the time. *Id.*

The '429 application thus fails to provide written description for the full scope of "*frequency band[]… associated with a 4G communication standard*" encompassing an LTE frequency band, or the full scope of "*antenna… configured to transmit and receive signals from a 4G communication standard*" that includes LTE (and LTE bands 12, 13, and 14). *Arthrex*, 35 F.4th at 1343-44; *Rivera*, 857 F.3d at 1321-22; *ICU Medical*, 558 F.3d at 1377; Weide, ¶¶311-317. Claims 1-5 and 12-20 are thus not entitled to priority to the '429 application's filing date. *Arthrex*, 35 F.4th at 1343.

A specification does not satisfy the written description requirement for a broad claim by merely describing a single embodiment. In *Smith & Nephew v. Arthrex*, IPR2017-00275, Paper 36, 27-28 (May 2, 2018), the claim recited a "first member" that covered both a flexible loop and a fixed aperture. The priority documents only disclosed a fixed aperture. The Board refused to give the claim an earlier effective-filing date because the priority documents did not provide a written description supporting the full scope of the claim including the flexible loop. *Id.*, 40; *generally id.*, 27-40. The Federal Circuit affirmed. *Arthrex*, 35 F.4th at 1343-1344.

Even if the ’429 application describes a species of 4G, that is not enough to support the broad genus (antenna working with 4G communication standard) that the ’677 patent claims. Written description for the 4G genus requires either (1) “structural features common to the members” of the genus or (2) “a representative number of species falling within the scope” of the genus so that a POSA “can visualize or recognize the members” of it. *Ariad*, 598 F.3d at 1350 (internal citation omitted).

The ’429 application fails both *Ariad* tests. The ’677 patent claims an antenna with specific “*complexity factors*” related to the antenna’s operating frequencies, but the ’429 application never teaches a POSA how to make or identify such an antenna for LTE because LTE did not exist. Based on the ’429 application’s disclosure no POSA would have known how to design an LTE antenna, because in December 2006 nobody knew what frequency ranges such an antenna needed to support, or the antenna dimensions needed to support resonances for those unknown frequencies. EX1001, 25:9-12 (antenna has to support “radiation modes” for “frequency bands”); Weide, ¶¶314-315.

The ’429 application’s suggestion that 4G would include bands within a 2-11 GHz frequency range (Baliarda-543, [0212]) provides no description of the 698-806 MHz frequency range that would later include LTE bands 12 to 14 (and which Fractus relies upon in litigation). Indeed, the ’429 application states that

"the integration of an antenna system into the MFWD 100 is further complicated by the presence in the MFWD 100 of additional antennas… for reception of… TV[.]" Baliarda-543, [0096]. This ***expressly excluded*** an antenna receiving signals at 698-806 MHz from the claimed "antenna system" because on December 21, 2006, the 698-806 MHz frequency range was allocated to television and could not be used for cellular communication. From the '429 application's description no POSA would have envisioned or recognized the 698-806 MHz frequency range as part of a 4G genus. Weide, ¶¶316-317.

The next application in the '677 patent's priority chain was U.S. Patent Application No. 14/246,491, filed April 7, 2014 as a continuation of the '429 application. EX1001, code (63). Thus, the earliest possible effective filing date for Challenged Claims 1-5 and 12-20 is **April 7, 2014**.

B. Analysis

The published parent case Baliarda-543 (EX1040) is AIA §102(a)(1) prior art to claims 1-5 and 12-20 because it published January 24, 2008, more than a year before the earliest possible April 7, 2014 effective-filing date. Baliarda-543, code (43). Baliarda-543 has the same specification as the '677 patent and anticipates claims 1-5 and 12-20 as shown below. Because Baliarda-543's specification is materially identical to the '677 patent, it discloses species within each Challenged Claim even if it does not disclose the full scope of each claim to a

broad genus. *See Chester v. Miller*, 906 F.2d 1574, 1577 (Fed. Cir. 1990) ("no impermissible anomaly or logical inconsistency" in treating a parent application as prior art that invalidates "broader claims" it did not adequately describe). To the extent the Board finds that Baliarda-543 does not expressly recite any claimed subject matter—such as limitation [12.k] below—it renders such claim obvious. Weide, ¶¶318-323.

'677 claim limitation	**Corresponding Disclosure in Baliarda-543**
1.PRE	Abstract, [0002], [0037], claim 16
1.a	Abstract, [0082]-[0084], [0097], [0152], [0212]-[0215], claim 16
1.b	[0082]-[0084], [0213]-[0217]
1.c	[0032]-[0035], [0098]-[0100], [0103], [0117]-[0118], [0212]-[0215], [0265], [0300], [0324]-[0325], Figs. 12A, 19A
1.d	*See* [1.c]; [0040], [0092], [0098]-[0100], [0212]-[0215], [0241]
1.e	[0137], [0141]-[0144], [0213]-[0215], Fig. 12B
1.f	[0181]-[0183], [0213]
1.g	[0212]-[0215]
1.h	[0198], [0215]
2	[0141]-[0149], [0270], Fig. 12A
3	*See* claim 2
4	[0103], [0212]-[0215]
5.a	*See* [1.e]
5.b	*See* [1.f]

’677 claim limitation	Corresponding Disclosure in Baliarda-543
12.PRE	*See* [1.PRE]
12.a	*See* [1.a]
12.b	*See* [1.b]
12.c	*See* [1.c]
12.d	*See* [1.d]
12.e	*See* [1.e]
12.f	*See* [1.f]
12.g	*See* [1.d]
12.h	*See* [1.d]
12.i	[0114]-[0116], [0226], Fig. 1B
12.j	[0133]-[0134], [0227]
12.k	[0154]-[0162], [0213]
13	*See* claim 2
14	*See* claim 2
15	[0213]
16.a	*See* [1.e]
16.b	*See* [1.f]
17	*See* claim 2
18	[0103], [0212]-[0215]
19.a	*See* [5.a]
19.b	*See* [5.b]

’677 claim limitation	Corresponding Disclosure in Baliarda-543
20	[0213]-[0215]

For Limitation [12.k], Baliarda-543 at [0154]-[0162] says that the G_2 grid and the G_2 cell aspect ratio are determined based on the aspect ratio of the antenna rectangle. This describes a 9 column by ($2n$ + 1) row G_2 grid of cells—e.g., having an odd number ($2n$ + 1) of rows where n is an integer between 0 and 5 (for 1 to 11 rows)—wherein the aspect ratio of the cells is as close to 1 as possible. Baliarda-543 therefore describes an antenna rectangle wherein the G_2 grid has 9 columns by 1 row or 3 rows, with each cell as square as possible, which means that Baliarda-543 separately describes an antenna rectangle with an aspect ratio on the order of 9 or 3, e.g., more than 2 as recited in [12.k]. Weide, ¶323.

IX. *SOTERA*

Petitioner stipulates that if IPR is instituted on this Petition it will not pursue, in the Verizon Litigation, any ground raised or that reasonably could have been raised in IPR. *Sotera Wireless v. Masimo*, IPR2020-01019, Paper 12, 18-19 (Dec. 1, 2020) (precedential as to §II.A).

X. DISCRETIONARY DENIAL IS UNWARRANTED

There is no basis for discretionary denial. In the Geotab ’677 IPR, Interim Director Stewart denied Fractus’ request for discretionary denial (IPR2025-01026, Paper 14 (“DD Decision”). As the Verizon and Geotab Litigations are

consolidated with the same , Verizon is positioned similarly to Geotab with respect to time-to-trial and the remaining *Fintiv* factors (including those the DD Decision found to weigh against discretionary denial). For at least the same reasons set forth in the DD Decision, discretionary denial is unwarranted here.

Petitioner reserves the right to respond to any Patent Owner discretionary denial arguments in opposition briefing under the March 26, 2025 Interim Process.

XI. CONCLUSION

The Board should institute review and cancel claims 1-20.

DATED: January 5, 2026

/Justin J. Oliver/

Justin J. Oliver (Reg. No. 44,986)
VENABLE LLP
600 Massachusetts Avenue, NW
Washington, D.C. 20001
Telephone: 202-721-5423
Facsimile: 202-344-8300
Email: JOliver@Venable.com
Counsel for Petitioner Verizon

APPENDIX A: U.S. PATENT NO. 11,031,677 CLAIM LIST

REF	Limitation
1.PRE	A wireless device comprising:
1.a	an antenna system comprising:
1.b	a ground plane;
1.c	a first antenna within the wireless device and configured to support at least three frequency bands contained within first and second frequency ranges of the electromagnetic spectrum,
1.d	the second frequency range being higher in frequency than the first frequency range and at least one of the three frequency bands being associated with a 4G communication standard,
1.e	the first antenna being proximate to a first short side of a ground plane rectangle enclosing the ground plane and defining a first antenna contour comprising an entire perimeter of the first antenna,
1.f	wherein the first antenna contour has a level of complexity defined by complexity factor F_{21} having a value of at least 1.20 and complexity factor F_{32} having a value less than 1.75; and
1.g	a second antenna within the wireless device and configured to support at least one frequency band different from the at least three frequency bands supported by the first antenna,
1.h	the second antenna being arranged completely within the ground plane rectangle.
2	The wireless device of claim 1, wherein the first antenna contour comprises at least 20 segments.
3	The wireless device of claim 2, wherein the perimeter of the first antenna contour comprises at least 35 segments.

REF	Limitation
4	The wireless device of claim 1, wherein the antenna system comprises a third antenna configured to receive signals employing a 4G communication standard.
5.a	The wireless device of claim 4, wherein the third antenna defines an antenna contour comprising an entire perimeter of the third antenna, and
5.b	wherein the antenna contour of the third antenna has a level of complexity defined by complexity factor F_{21} having a value of at least 1.2 and a complexity factor F_{32} having a value of at least 1.35.
6.PRE	A wireless device comprising:
6.a	an antenna system comprising:
6.b	a ground plane;
6.c	a first antenna within the wireless device and configured to support at least two frequency bands contained within first and second frequency ranges of the electromagnetic spectrum,
6.d	the second frequency range being higher in frequency than the first frequency range,
6.e	the first antenna being proximate to a first short side of a ground plane rectangle enclosing the ground plane and defining a first antenna contour comprising an entire perimeter of the first antenna,
6.f	wherein the first antenna contour has a level of complexity defined by complexity factor F_{21} having a value of at least 1.20 and complexity factor F_{32} having a value less than 1.75; and
6.g	a second antenna within the wireless device and defining a second antenna contour comprising an entire perimeter of the second antenna,

REF	Limitation
6.h	the second antenna being proximate to a second short side of the ground plane rectangle that is opposite to the first short side of the ground plane rectangle,
6.i	a minimum-sized parallelepiped of rectangular faces that completely encloses a volume of the second antenna defining an antenna box, and
6.j	an orthogonal projection of the antenna box along a normal to a face with a largest area of the second antenna defining an antenna rectangle,
6.k	wherein a length of the second antenna contour is greater than four times a diagonal of the antenna rectangle.
7	The wireless device of claim 6, wherein the first antenna contour comprises at least 20 segments.
8	The wireless device of claim 7, wherein the first antenna contour comprises at least 35 segments.
9	The wireless device of claim 6, wherein the second antenna contour has a level of complexity defined by complexity factor F_{21} having a value of at least 1.2 and a complexity factor F_{32} having a value of at least 1.35.
10	The wireless device of claim 6, wherein the antenna system comprises a third antenna configured to provide wireless connectivity in at least two frequency bands.
11.a	The wireless device of claim 10, wherein the third antenna defines a third antenna contour comprising an entire perimeter of the third antenna, and
11.b	wherein the third antenna contour has a level of complexity defined by complexity factor F_{21} having a value of at least 1.20 and complexity factor F_{32} having a value of at least 1.35.
12.PRE	A wireless device comprising:

REF	Limitation
12.a	an antenna system comprising:
12.b	a ground plane;
12.c	a first antenna within the wireless device and configured to provide operation in at least four frequency bands, at least one of the at least four frequency bands is contained within a first frequency range and at least one other of the four frequency bands is contained within a second frequency range,
12.d	the first frequency range being lower in frequency than the second frequency range,
12.e	the first antenna being proximate to a first short side of a ground plane rectangle enclosing the ground plane, the first antenna defining a first antenna contour comprising an entire perimeter of the first antenna, and
12.f	wherein the first antenna contour has a level of complexity defined by complexity factor F_{21} having a value of at least 1.20 and complexity factor F_{32} having a value less than 1.75, and
12.g	wherein the first antenna is configured to transmit and receive signals from a 4G communication standard; and
12.h	a second antenna within the wireless device and configured to receive signals from a 4G communication standard,
12.i	a minimum-sized parallelepiped of rectangular faces that completely encloses a volume of the second antenna defining an antenna box,
12.j	an orthogonal projection of the antenna box along a normal to a face with a largest area of the second antenna defining an antenna rectangle,
12.k	an aspect ratio of the antenna rectangle being defined as a ratio between a width and a height of the antenna rectangle, and wherein the aspect ratio has a value of at least 2.

REF	Limitation
13	The wireless device of claim 12, wherein the first antenna contour comprises at least 20 segments.
14	The wireless device of claim 13, wherein the first antenna contour comprises at least 35 segments.
15	The wireless device of claim 12, wherein the second antenna is proximate to a second short side of the ground plane rectangle that is opposite to the first short side of the ground plane rectangle.
16.a	The wireless device of claim 12, wherein the second antenna defines a second antenna contour comprising an entire perimeter of the second antenna, and
16.b	wherein the second antenna contour has a level of complexity defined by complexity factor F_{21} having a value of at least 1.20 and complexity factor F_{32} having a value of at least 1.35.
17	The wireless device of claim 16, wherein the second antenna contour comprises at least 20 segments.
18	The wireless device of claim 12, wherein the antenna system comprises a third antenna configured to provide wireless connectivity in at least two frequency bands.
19.a	The wireless device of claim 18, wherein the third antenna defines a third antenna contour comprising an entire perimeter of the third antenna, and
19.b	wherein the third antenna contour has a level of complexity defined by complexity factor F_{21} having a value of at least 1.20 and complexity factor F_{32} having a value of at least 1.35.
20	The wireless device of claim 18, wherein the third antenna is proximate to a third side of the antenna rectangle being orthogonal to the first short side.

CERTIFICATE OF WORD COUNT

I hereby certify that this petition complies with the word count limitation of 37 C.F.R. § 42.24(a)(1)(i) because the petition contains a total of 13,978 words. This total excludes the cover page, signature block, and the parts of the petition exempted by 37 C.F.R. § 42.24(a)(1).

DATED: January 5, 2026

/Justin J. Oliver/

Justin J. Oliver (Reg. No. 44,986)
VENABLE LLP
600 Massachusetts Avenue, NW
Washington, D.C. 20001
Telephone: 202-721-5423
Facsimile: 202-344-8300
Email: JOliver@Venable.com
Counsel for Petitioner Verizon

CERTIFICATE OF SERVICE

The undersigned certifies that a complete copy of this Petition for Inter Partes Review of U.S. Patent No. 11,031,677 and all Exhibits and other documents filed together with this Petition were served on this date on the official correspondence address for the patent shown in USPTO Patent Center via FEDERAL EXPRESS next business day delivery:

EDELL, SHAPIRO & FINNAN, LLC
9801 Washingtonian Blvd.
Suite 750
Gaithersburg, MD 20878

DATED: January 5, 2026

/Justin J. Oliver/

Justin J. Oliver (Reg. No. 44,986)
VENABLE LLP
600 Massachusetts Avenue, NW
Washington, D.C. 20001
Telephone: 202-721-5423
Facsimile: 202-344-8300
Email: JOliver@Venable.com
Counsel for Petitioner Verizon