US 20140263087A1

(19) United States
(12) Patent Application Publication
Renaud et al.
(10) Pub. No.: US 2014/0263087 A1
(43) Pub. Date: Sep. 18, 2014

(54) **SWIMMING POOL CLEANER WITH DOCKING SYSTEM AND/OR OTHER RELATED SYSTEMS AND METHODS**

(71) Applicant: **Hayward Industries, Inc.**, Elizabeth, NJ (US)

(72) Inventors: **Benoit Joseph Renaud**, Clemmons, NC (US); **David John Hardy**, Clemmons, NC (US); **Jason Wayne Parcell**, Winston-Salem, NC (US)

(73) Assignee: **Hayward Industries, Inc.**, Elizabeth, NJ (US)

(21) Appl. No.: **14/207,893**

(22) Filed: **Mar. 13, 2014**

Related U.S. Application Data

(60) Provisional application No. 61/789,388, filed on Mar. 15, 2013.

Publication Classification

(51) **Int. Cl.**
E04H 4/16 (2006.01)

(52) **U.S. Cl.**
CPC ***E04H 4/1654*** (2013.01)
USPC **210/745**; 210/143

(57) **ABSTRACT**

Exemplary embodiments are directed to swimming pool cleaners, systems and methods that generally include a swimming pool cleaner and a docking station. Embodiments of the swimming pool cleaner can include a battery and a debris container. The docking station generally includes an opening configured and dimensioned to at least partially receive the swimming pool cleaner. Upon receipt of the swimming pool cleaner in the opening of the housing, the docking station can automatically recharge the battery of the swimming pool cleaner and/or automatically clean the debris container of the swimming pool cleaner.

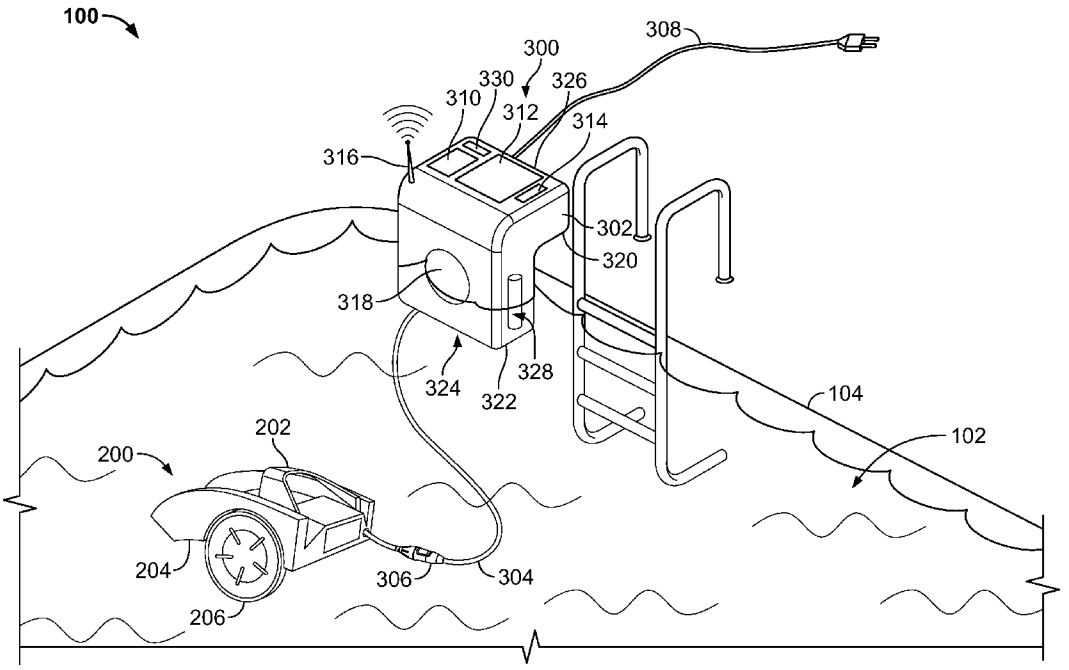

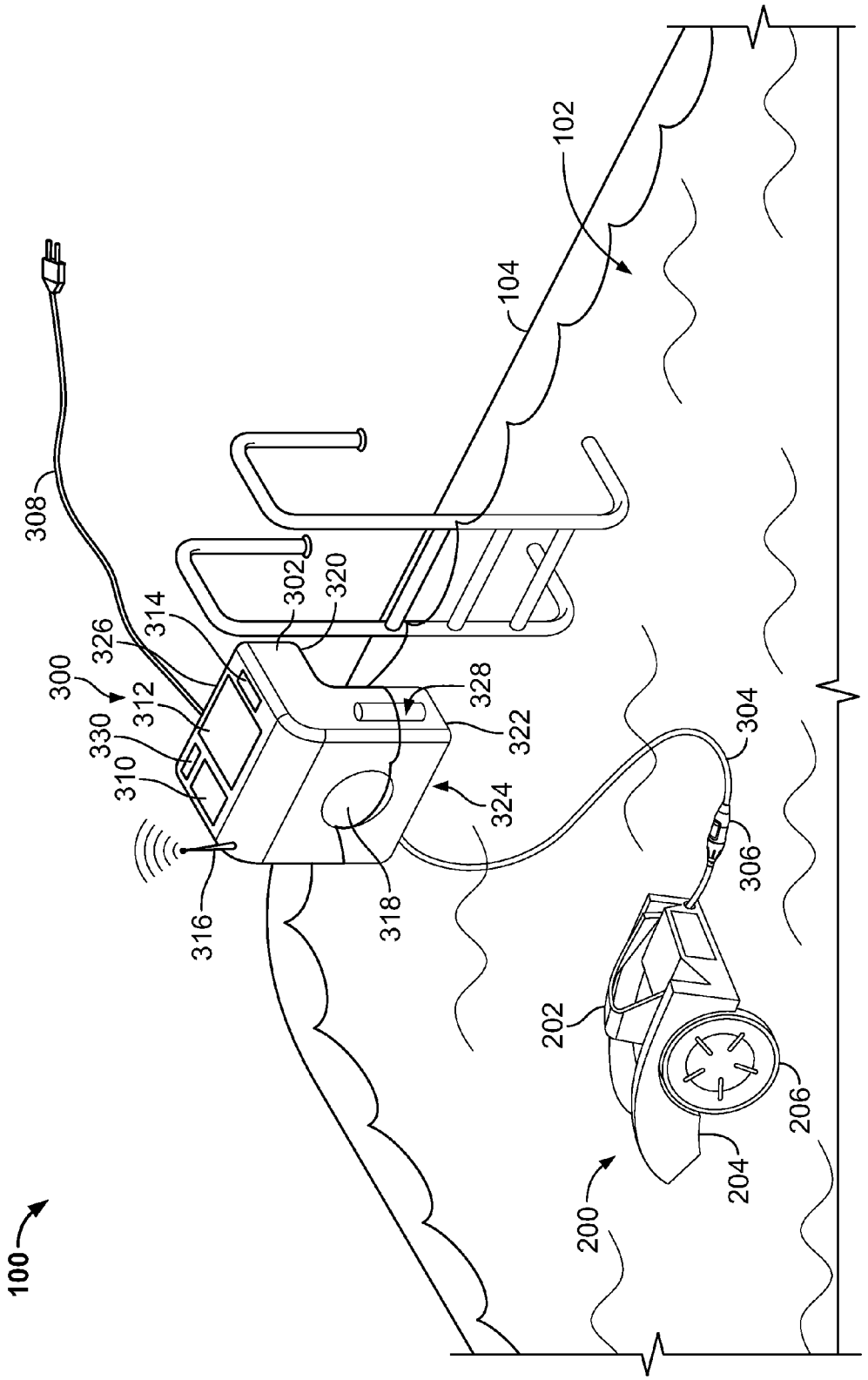
100
102
104
200
202
204
206
300
302
304
306
308
310
312
314
316
318
320
322
324
326
328
330

FIG. 1

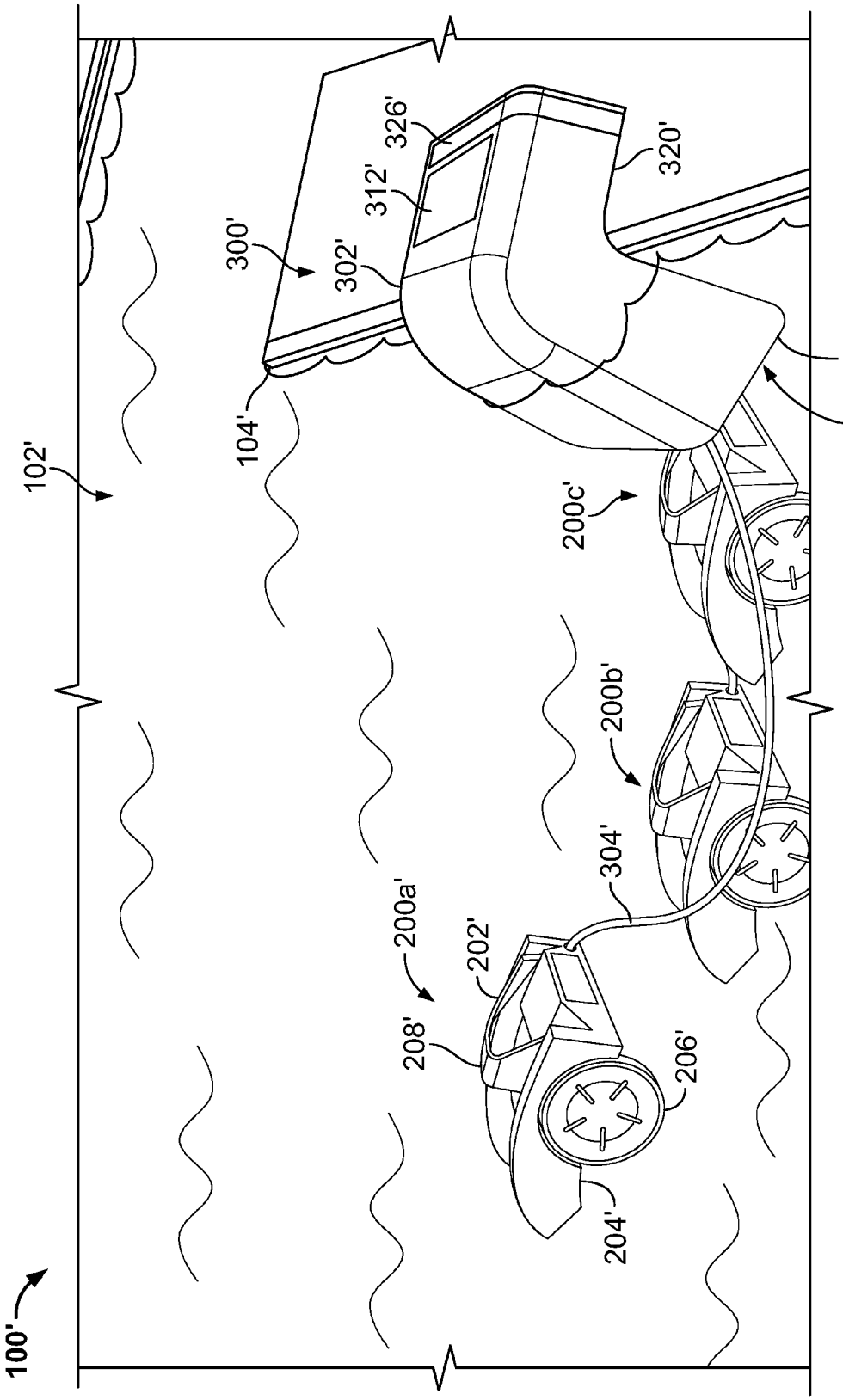
100'
102'
104'
300'
302'
312'
326'
320'
322'
324'
200c'
200b'
304'
200a'
202'
208'
206'
204'

FIG. 2

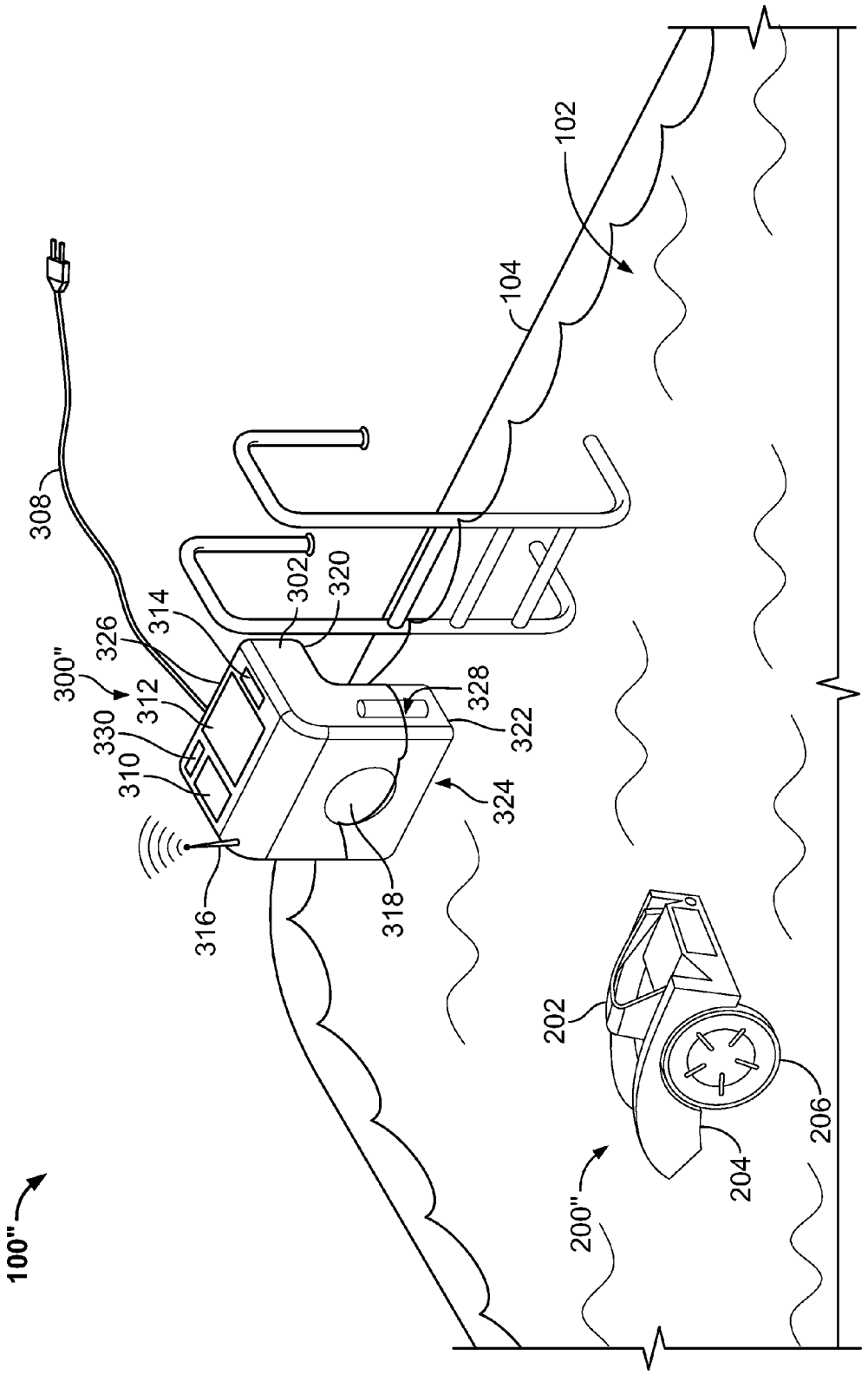
100"
102
104
308
300"
302
320
314
326
312
330
310
328
322
324
316
318
202
206
204
200"

FIG. 3

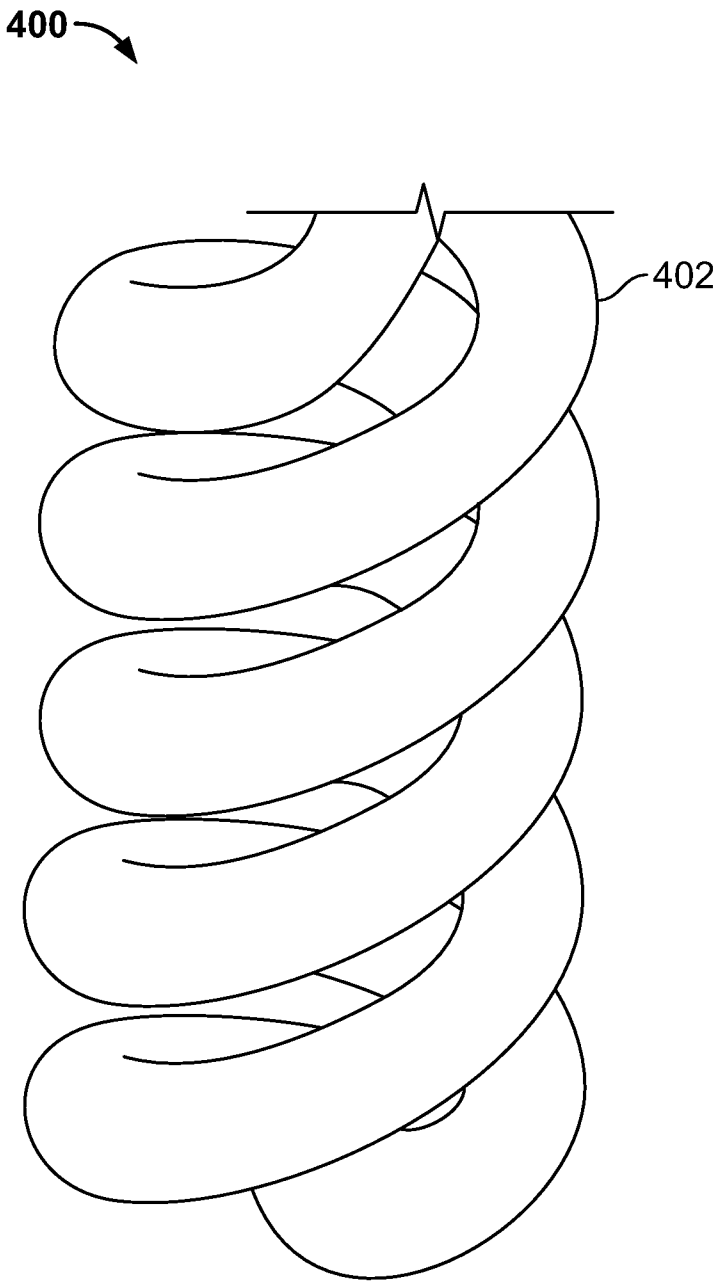

FIG. 4

SWIMMING POOL CLEANER WITH DOCKING SYSTEM AND/OR OTHER RELATED SYSTEMS AND METHODS

CROSS-REFERENCE TO RELATED APPLICATIONS

[0001] The present application claims the benefit of priority to U.S. Provisional Patent Application No. 61/789,388, filed Mar. 15, 2013, the contents of which are incorporated herein by reference in their entirety for all purposes.

TECHNICAL FIELD

[0002] The present disclosure relates to swimming pool cleaners and associated systems and methods and, more particularly, to automatically rechargeable pool cleaners for reducing user interaction/supervision and swimming pool cleaning time.

BACKGROUND

[0003] Robotic swimming pool cleaners are generally designed to move along the swimming pool floor and/or walls to clean the necessary surfaces from, e.g., debris, sediment, and the like. The motion of robotic swimming pool cleaners can be preprogrammed, reactive to the pool environment, random motion or a combination thereof. In general, electrical power is provided to the robotic swimming pool cleaner through a power cable extending from the swimming pool cleaner and connecting to a power source in the periphery of the swimming pool.

[0004] The combination of preprogrammed and/or random motion of the swimming pool cleaner with the plurality of power cables implemented generally creates issues relating to power cable entanglement. In particular, as the swimming pool cleaner moves along the floor, walls and/or water line of the swimming pool, the plurality of power cables implemented can become twisted and/or entangled with, e.g., other power cables, structures around the periphery of the swimming pool, the swimming pool cleaner, or the like, thus limiting the motion of the swimming pool cleaner. Power cable entanglement can create a need for user interaction and/or supervision to ensure that the swimming pool cleaner can freely move along the entire surface area of the swimming pool floors, walls and/or water line. In addition, swimming pool cleaners can require user interaction and/or supervision for installing the swimming pool cleaner in the pool on a daily basis, for recharging the swimming pool cleaner, and for emptying the wet and/or dirty debris bag or container of the swimming pool cleaner after the swimming pool has been cleaned.

[0005] Thus, despite efforts to date, a need remains for swimming pool cleaners which reduce the amount of user interaction and/or supervision and the swimming pool cleaning time.

SUMMARY

[0006] In accordance with embodiments of the present disclosure, an exemplary docking station for a swimming pool cleaner is provided that generally includes a housing. The housing of the docking station includes communication means for communicating with the swimming pool cleaner. The housing also includes an opening configured and dimensioned to at least partially receive the swimming pool cleaner. Upon receipt of the swimming pool cleaner in the opening of the housing, the docking station can, e.g., automatically recharge a battery of the swimming pool cleaner, automatically clean a debris container of the swimming pool cleaner, combinations thereof, and the like.

[0007] The docking station can generally include a docking station battery. In some embodiments, the docking station includes, e.g., an electrical cable connecting the docking station to a power source, inductive charging means, and the like, for charging the docking station battery. The communication means generally includes a communications system, e.g., a wireless communications system, wired communication system, and the like. The docking station generally includes a user interface, e.g., a graphical user interface (GUI) for programming the docking station and/or the swimming pool cleaner. The docking station also includes an access door for accessing a docking station debris container. The docking station may include an alarm for unwanted intrusion. Further, the docking station generally includes a locking mechanism for detachably securing the swimming pool cleaner within the opening of the housing when the swimming pool cleaner is docked at the docking station.

[0008] In some embodiments of the present disclosure, an exemplary swimming pool cleaner for a swimming pool is provided that includes a housing and a vision system. The housing includes a motor, a storage device and a processing device. The vision system includes sensors (e.g., camera) and programming stored on the storage device for processing by the processing device (and control of the pump motor and/or other components relating to navigation). The sensor (e.g., turbidity sensor), and/or other means for identifying debris located in the swimming pool, provide location information to the processor and/or other means for directing the swimming pool cleaner to the debris.

[0009] In some embodiments, the motor can be, e.g., an electronically commutated motor. The swimming pool cleaner includes a controller for regulating actuation of the motor. The motor (e.g., single or dual motor) generally powers at least one of movement of the swimming pool cleaner and suction of a suction pump impeller. In some embodiments, the swimming pool cleaner can include two separate motors for powering the movement of the swimming pool cleaner and suction of the suction pump impeller. The vision system can be in communication with at least one of the controller and the motor. Upon identifying debris located in the swimming pool, the vision system can actuate the motor to direct the swimming pool cleaner to the debris. The vision system can also actuate the motor to slow down the swimming pool cleaner upon reaching the debris. The vision system can further actuate the motor to increase suction of the suction pump impeller upon reaching the debris.

[0010] In some aspects, the swimming pool cleaner can includes a light, e.g., a light-emitting diode (LED), an ultraviolet (UV) light, and the like, on a bottom surface of the swimming pool cleaner. The wavelength for the UV light can be, e.g., about 254 nanometers (nm), for disinfecting and/or killing bacteria and other undesired organisms in the swimming pool. In some embodiments, the light can define a helical shape to increase the amount of surface-to-surface exposure between the light and the water. The swimming pool cleaner generally includes a rechargeable battery disposed in (or outside of) the housing for powering the swimming pool cleaner. The swimming pool cleaner can include, e.g., an

electrical cable connected to a power source, inductive charging means (e.g., inductive coupling), and the like, for recharging the rechargeable battery.

[0011] In accordance with embodiments of the present disclosure, an exemplary method of regulating a swimming pool cleaner in a swimming pool is provided that generally includes providing a housing that includes a motor, a storage device and a processing device. The method includes providing a vision system stored on the storage device. The vision system includes means for identifying debris located in the swimming pool and means for directing the swimming pool cleaner to the debris. The method also includes identifying, via the vision system, debris located in the swimming pool and directing the swimming pool cleaner to the debris.

[0012] The housing can include a controller for regulating actuation of the motor. The method generally includes actuating the motor via the vision system to slow down the swimming pool cleaner upon reaching the debris. The method generally includes actuating the motor via the vision system to increase suction of a suction pump impeller upon reaching the debris. In general, the method includes actuating a light positioned on a bottom surface of the swimming pool cleaner to disinfect at least one of a wall, a floor and water of the swimming pool. The method also includes powering the swimming pool cleaner with a rechargeable battery disposed in the housing. The method generally includes recharging the rechargeable battery with, e.g., an electrical cable connected to a power source, inductive charging means of the swimming pool cleaner, and the like.

[0013] In accordance with embodiments of the present disclosure, an exemplary method of maintaining a swimming pool cleaner is provided that generally includes providing a housing. The housing includes communication means for communicating with the swimming pool cleaner and an opening configured and dimensioned to at least partially receive the swimming pool cleaner. The method includes receiving the swimming pool cleaner in the opening. The method generally also includes at least one of automatically recharging a battery of the swimming pool cleaner and automatically cleaning a debris container of the swimming pool cleaner upon receipt of the swimming pool cleaner in the opening.

[0014] The housing generally includes a docking station battery. The method generally includes charging the docking station battery with, e.g., an electric cable connecting the docking station to a power source, inductive means, and the like. The method generally includes communicating with the swimming pool cleaner via the communication means to determine a need for recharging the battery of the swimming pool cleaner and/or cleaning the debris container of the swimming pool cleaner. In general, the method includes detachably securing the swimming pool cleaner within the opening of the housing.

[0015] In accordance with embodiment of the present disclosure, an exemplary swimming pool cleaner system for a swimming pool is provided that generally includes a swimming pool cleaner and a docking station. The swimming pool cleaner generally includes a battery and a debris container. The docking station generally includes an opening configured and dimensioned to at least partially receive the swimming pool cleaner, as well as a debris container (e.g., basket). Upon receipt of the swimming pool cleaner in the opening of the housing, the docking station can at least one of automatically recharge the battery of the swimming pool cleaner and automatically clean the debris container of the swimming pool cleaner.

[0016] Other objects and features will become apparent from the following detailed description considered in conjunction with the accompanying drawings. It is to be understood, however, that the drawings are designed as an illustration only and not as a definition of the limits of the invention.

BRIEF DESCRIPTION OF THE DRAWINGS

[0017] To assist those of skill in the art in making and using the disclosed swimming pool cleaners and associated systems and methods, reference is made to the accompanying figures, wherein:

[0018] FIG. **1** shows an exemplary swimming pool cleaner system according to the present disclosure;

[0019] FIG. **2** shows an exemplary swimming pool cleaner system according to the present disclosure;

[0020] FIG. **3** shows an exemplary swimming pool cleaner system according to the present disclosure; and

[0021] FIG. **4** shows an exemplary light of a swimming pool cleaner according to the present disclosure.

DESCRIPTION OF EXEMPLARY EMBODIMENTS

[0022] With reference to FIG. **1**, an exemplary swimming pool cleaner system **100** (hereinafter "system **100**") is provided that generally includes an exemplary swimming pool cleaner **200** (hereinafter "cleaner **200**") and an exemplary docking station **300**. The exemplary swimming pool cleaner **200** discussed herein is a "top/bottom" robotic (electric) cleaner. Those of ordinary skill in the art shall recognize that "top/bottom" references that the cleaner **200** can operate in a plurality of modes of operation, including a "bottom mode," where the cleaner **200** traverses, and cleans near, the walls (e.g., vertical or horizontal walls) of the pool, and further including a "top mode," where the cleaner rises to the water surface and cleans the water surface, much like a skimmer. Those of ordinary skill in the art shall also recognize that "robotic (electric)" references the source of power—electricity—for controllably alternating between the modes, for propulsion, drive, and/or cleaning. As further discussed herein, additional and/or alternative sources of power are contemplated, e.g., a negative water pressure (suction) power source and a positive water pressure power source.

[0023] The cleaner **200** includes a housing **202** which includes a plurality of components therein. For example, the housing **202** includes a motor, e.g., an electronically commutated motor, a storage device, and a processing device therein (not shown). The housing **202** also includes a debris container (not shown) for collecting the debris collected from the swimming pool **102**. The housing **202** defines a bottom surface **204** which, in some embodiments, includes a light, e.g., a UV light, for disinfecting the swimming pool **102** walls, floor, and/or water. In particular, the light can help in maintaining the sanitation of the swimming pool **102** environment. An exemplary UV light is discussed further below with reference to FIG. **4**.

[0024] The housing **202** may include an LED light(s) for visual/entertainment effects and/or to indicate where the cleaner **200** is located in the swimming pool **102**.

[0025] The cleaner **200** generally includes wheels **206**, e.g., rollers, tracks, and the like, for moving the cleaner **200** in the

swimming pool **102**. The cleaner **200** can also include a controller (not shown) within the housing **202**. The controller can be actuated by the processing device to actuate the motor for movement of the cleaner **200** and/or suction of the suction pump impeller. The cleaner **200** also includes a rechargeable battery (not shown) within (or outside of) the housing **202** for powering the cleaner **200**. However, as described above, it should be understood that alternative sources of power can also be used for powering the cleaner **200**.

[0026] The system **100** of FIG. **1** also includes a docking station **300**. The docking station **300** can be positioned at an edge **104** of the swimming pool **102** such that a bottom end **322** of the docking station **300** extends into the water of the swimming pool **102** and a top end **326** extends above the water of the swimming pool **102**. For example, the docking station **300** can include a mating surface **320** which defines a substantially L-shaped configuration, but is not limited to such a configuration. The mating surface **320** can thereby be positioned on the edge **104** of the swimming pool **102** ledge to maintain the top end **326** of the docking station **300** above the edge **104** and the bottom end **322** of the docking station **300** in the water. In some embodiments, the mating surface **320** can include, e.g., a textured surface, a rubber surface, and the like, to create friction between the mating surface **320** and the edge **104** of the swimming pool **102**. The friction between the mating surface **320** and the edge **104** of the swimming pool **102** can help in maintaining the docking station **300** positioned on the edge **104**.

[0027] The docking station **300** generally includes a housing **302**. The housing **302** can include communication means for communicating with the cleaner **200**, e.g., sending and/or receiving signals to and from the cleaner **200**. For example, the communication means can be wireless or wired communication means. FIG. **1** shows the housing **302** as including communication means in the form of a wireless antenna **316**. It should be understood that the cleaner **200** can also include communication means capable of receiving and/or sending signals to and from the cleaner **200** to the docking station **300** (e.g., a transceiver). The docking station **300** generally includes an opening **324** at a bottom end **322** of the docking station **300** which can be configured and dimensioned to at least partially receive the cleaner **200** therein.

[0028] The docking station **300** generally includes a battery pack (not shown) inside the housing **302** and an electric cable **308**, e.g., a self-reeling electric cord which connects the docking station **300** to a power source (not shown), e.g., a pool cleaner power supply or an electric outlet, for recharging the battery pack. In the embodiment shown in FIG. **1**, the docking station **300** also includes an electric cable **304** for charging the rechargeable battery (not shown) within the housing **202** of the cleaner **200**. The electric cable **304** can be, e.g., a self-reeling and/or unreeling power and/or communication cord. A hose swivel **306** can be implemented with respect to the electric cable **304** and/or the cleaner **200** to prevent tangling of the electric cable **304** as the cleaner **200** travels along the walls, floor and/or water line of the swimming pool **102**.

[0029] In some embodiments, the cleaner **200** and/or the docking station **300** can include programmed therein data related to a vision system (not shown). For example, the vision system can include a PCB (not shown) disposed inside the cleaner **200** and/or the docking station **300** and a storage device, e.g., a hard drive, a flash drive, an optical drive, read only memory (ROM), random access memory (RAM), and the like, capable of receiving and storing the programming of the vision system. A processing device (not shown), such as a microprocessor, inside of the cleaner **200** and/or the docking station **300** can access the programmed data related to the vision system for actuating the motor (not shown), e.g., an electrically commutated motor of the cleaner **200**, such as a brushless DC electric motor. The vision system includes one or a plurality of sensors (including sensing systems, for example) for acquiring information from which the location of debris can be inferred from the programming of the vision system. This may include pressure sensor(s), flow sensor(s), distance sensor(s), optical sensors, heat sensors, turbidity sensors, pH sensors, and/or other sensors, including sensor systems, for example. In particular, the sensors of the vision system can interact with the controller and/or processing device to identify areas on the pool floor, walls and/or water line where debris or dirt exists in the swimming pool **102**, such as at the bottom (on the horizontal or vertical walls) and/or at the surface.

[0030] If an area of debris is located by the vision system or other sensor, the vision system can communicate with one or more motors of the cleaner **200**, to actuate, or control the speed of, the motor of the cleaner **200** such that the cleaner **200** travels to the area of debris for cleaning. Navigation may also be controlled in accordance with algorithm. For example, if an area of debris is located, the vision system can communicate with the cleaner **200** to drive and/or steer the wheels **206** of the cleaner **200** in the direction of the area of debris. The cleaner **200** can initially be sped up to a constant speed until reaching the area of debris. Once the area of debris is reached (or an area near the area of debris is reached) the cleaner **200** can be actuated to slow down. In some embodiments, upon reaching the area of debris, the cleaner **200** can also be actuated via the vision system to start and/or increase the suction of the suction pump impeller to collect the debris in the swimming pool into the debris container located in the housing **202** of the cleaner **200**.

[0031] The vision system can include programming which identifies, e.g., coordinates, around the swimming pool **102** and/or senses the layout of the swimming pool **102** such that the vision system can monitor the position of the cleaner **200** in the swimming pool **102** at all times. The vision system can also include at least one sensor which identifies areas of debris by sensing areas of optical contrast, for example, generated by a foreign object, debris and/or dirt. In some embodiments, the exemplary vision system optimizes the cleaning cycle of the cleaner **200** by generally cleaning the swimming pool **102** where the vision system detects debris, rather than focusing on cleaning areas of the swimming pool **102** which may already be clean. The cleaner **200** thereby uses energy in an efficient manner for a prolonged period of time.

[0032] With continued reference to FIG. **1**, the docking station **300** can include a user interface **330**, e.g., a graphical user interface, which can be used for programming the docking station **300**. Programming the docking station **300**, e.g., the vision system of the docking station **300**, indirectly involves programming the cleaner **200** since the programming involves the regulation and/or control of the cleaner **200**. The user interface **330** can also be used to access the variety of preprogrammed back up data for cleaning programs, cleaning modes and/or cleaning paths stored in the data storage of the docking station **300**. The docking station **300** can also include an access door **310** for user access to, e.g., a remote control, push buttons, and/or joystick for controlling the actions of the cleaner **200**. The remote control

and/or joystick can allow a user to manually control the position and/or the cleaning function of the cleaner **200**. In some embodiments, the docking station **300** also includes a speaker **314** for emitting auditory signals and an alarm **328**, e.g., sonar, for actuating when unwanted intrusion occurs. The alarm **328** can actuate a signal to be emitting through the speaker **314** for notifying a user of a problem. The docking station **300** may also include light **318**, e.g., an LED light, a laser show, universal color logic, on the housing **302**. The docking station **300** generally includes a debris container (not shown) within the housing **302** which can be accessed through an access door **312**. The debris container can be removed, cleaned and replaced by a user.

[0033] In particular, the cleaner **200** can travel along the swimming pool **102** walls, floor and/or water line and the docking station **300** can monitor the level of electricity remaining in the battery, i.e., the battery life, of the cleaner **200**. When the battery life of the cleaner **200** is below a predetermined level, the docking station **300** can communicate with the cleaner **200** such that the cleaner **200** travels to the docking station **300** and docks to the docking station **300** by at least partially entering the opening **324** on the bottom end **322** of the housing **302**. Upon entry into the opening **324**, a valve or an alternative opening (not shown) of the cleaner **200** can be actuated to automatically open such that the debris container of the cleaner **200** can be cleaned/emptied into the debris container of the docking station **300**. Thus, as the cleaner **200** enters the opening **324**, the valve can be opened and the debris from the debris container of the cleaner **200** can be, e.g., sucked out, washed out, and the like, into the debris container of the docking station **300**. Similarly, when the cleaner **200** enters the opening **324**, the battery of the cleaner **200** can be automatically recharged by the battery pack located in the docking station **300**.

[0034] As described above, the battery pack of the docking station **300** can receive power from, e.g., the electric cable **308**, a self-generating device powered by the flow of water through a skimmer (not shown), inductive charging means (e.g., inductive coupling in a cleaner), and the like. In some embodiments, the opening **324** can include a locking mechanism (not shown) for detachably securing the cleaner **200** within the opening **324**. Upon completing the cleaning of the debris container and/or recharging of the battery of the cleaner **200**, the cleaner **200** can be released to continue cleaning of the swimming pool **102**. During an inactive state of the cleaner **200**, i.e., when the cleaner is not cleaning the swimming pool **102**, the cleaner **200** can return and "dock" at the docking station **300** until the cleaning cycle is initiated. The docking station **300** thereby acts as a "parking garage" for the cleaner **200**. In some embodiments a skimmer (not shown) can be connected to the docking station **300** and can provide a housing for the cleaner **200**, including a charging capability for the battery of the cleaner **200** and debris dumping into the skimmer for cleaning the debris container of the cleaner **200**. The interaction between the docking station **300** and the cleaner **200** creates an optimized cleaning program of the swimming pool **102** as opposed to random action cleaners generally used in the industry.

[0035] In some embodiments, the skimmer includes a generator for generating electricity from water flowing therethrough. This electricity can then be provided from the skimmer to the cleaner in accordance with the methods of power transfer described herein, for example.

[0036] The self-cleaning of the debris container, e.g., a debris bag, and/or the self-charging of the battery of the cleaner **200** creates a self-contained system **100** which requires minimum settings and/or user interaction on a daily basis. Other advantageous aspects of the system **100** include, e.g., the wireless applications of the system **100** prevent the tangling of electric cables, manual work from the user to install the cleaner **200** in the swimming pool **102** is reduced, no additional space is required for storage of the cleaner **200** during inactive periods, no user interaction is required to clean the debris bag or container of the cleaner **200**, the cleaner **200** generally cleans the swimming pool **102** in a faster time period due to the vision system, the efficient cleaning based on the vision system increases energy efficiency, the cleaner **200** and/or docking station **300** can be preprogrammed for a cleaning mode and/or path, and the like.

[0037] Turning now to FIG. **2**, an exemplary swimming pool cleaner system **100'** (hereinafter "system **100'**") is provided for cleaning a swimming pool **102'** that generally includes a swimming pool cleaner (hereinafter "cleaner") and a docking station **300'**. The cleaner is shown in three positions in FIG. **2**. In particular, cleaner **200***a*' is positioned at the water line of the swimming pool **102'**, cleaner **200***b*' is positioned at the bottom of the swimming pool **102'**, and cleaner **200***c*' is positioned in a docking orientation relative to the docking station **300'**. FIG. **2** thereby illustrates the top/bottom capabilities of the exemplary robotic cleaner, as well as the ability of the top/bottom electric cleaner to dock in the docking station **300'** for cleaning of a debris cartridge and/or recharging of a battery (not shown). The system **100'** can function substantially similarly to system **100**. The cleaner **200'** generally includes a housing **202'**, defines a bottom surface **204'** and includes wheels **206'**. In some embodiments, the housing **202'** includes a handle **208'** to assist a user in lifting and transporting the cleaner **200'**.

[0038] The docking station **300'** generally includes a housing **302'** that defines a substantially L-shaped configuration. The housing **302'** includes a mating surface **320'** for positioning on an edge **104'** of the swimming pool **102'** such that a top end **326'** of the docking station **300'** is positioned above the edge **104'** of the swimming pool **102'** and a bottom end **322'** of the docking station **300** is positioned below the water. The docking station **300'** can include an access door **312'** which permits a user to access, e.g., a user interface and/or joystick for programming and/or controlling the docking station **300'** and/or the cleaner **200'**. Similar to the docking station **300** described above, docking station **300'** and/or the cleaner **200'** can be programmed with a visual system for optimizing the cleaning modes or path for cleaning the swimming pool **102'**. The docking station **300'** also includes an opening **324'** at the bottom end **322'** configured and dimensioned to receive a cleaner **200***c*' oriented in a docking orientation. The docking station **300'** can communicate and/or provide power to the cleaner via an electric cable **304'** and/or through a wireless communication. The docking station **300'** can be powered by a power source connected to the docking station **300'** by an electric cable (not shown) and/or wirelessly through inductive charging means.

[0039] With reference to FIG. **3**, an exemplary swimming pool cleaner system **100"** (hereinafter "system **100"**") is provided for cleaning a swimming pool **102** that generally includes a swimming pool cleaner **200"** (hereinafter "cleaner **200"**") and a docking station **300"**. In particular, the cleaner **200"** and the docking station **300"** can function substantially

similarly to system **100** described above, except for the wireless communication shown between the cleaner **200"** and the docking station **300"**. Thus, the like parts of the cleaner **200**, cleaner **200"**, docking station **300** and docking station **300"** are marked in FIG. **3** with reference numbers equivalent to those used in FIG. **1**. As can be seen from FIG. **3**, rather than including an electric cable **304** extending from the docking station **300** to the cleaner **200** (as shown in FIG. **1**), the cleaner **200"** communicates with the docking station **300"**, and vice versa, via a wireless communication network. For example, the docking station **300"** can communicate with the cleaner **200"** with the wireless antenna **316**. The cleaner **200"** can be charged by inductive charging means provided with the cleaner **200"**, such as that in accordance with the inductive charging disclosed by U.S. Patent App. Pub. No. 2012/022297, published Sep. 6, 2012, entitled "Power Supplies for Pool and Spa Equipment" (assigned to Hayward Industries, Inc.). In some aspects, the cleaner **200"** can return to the docking station **300"** for cleaning the debris container or bag and/or recharging the rechargeable battery within the cleaner **200"** (not shown).

[0040] In some embodiments, the exemplary cleaners discussed herein, e.g., cleaner **200**, can include a light positioned on a bottom surface **204** for sanitation purposes. FIG. **4** illustrates an exemplary sanitation light **400**, e.g., a UV light. The light **400** can emit a wavelength of approximately 254 nm. This wavelength can be used to disinfect and/or kill bacteria and other undesired organisms in the swimming pool **102** while the cleaner **200** cleaners the swimming pool **102** from larger debris. However, it should be understood that alternative lights **400** and/or wavelengths capable of disinfecting and/or killing bacteria can be used for assisting in sanitation of the swimming pool **102**. The light **400** generally defines a housing **402** which can be configured into a helical or swirl shape as shown in FIG. **4**. The helical or swirl shape of the light **400** can maximize the length of the light **400**, while reducing the vessel or housing which can be used to encase the light **400**.

[0041] The UV light, e.g., UV light **400**, can be carried by a bottom surface of any of the cleaners herein discussed. More specifically, the underside of the cleaner can carry a vessel monolithically, or modularly (removable), formed therewith that includes an internal cavity for receiving and electrically connecting the light **400** to an electric power source supplied from within the cleaner. The cavity can be dimensioned define a height of distance D (not shown). As would be understood by those of ordinary skill in the art, by configuring the light **400** in a helical or swirl shape, a greater surface-to-surface contact area (between the light and the water) can fit within distance D of the cavity when compared to a light having a straight configuration. Thus, a greater amount of, e.g., UV light, can be provided to disinfect and/or kill bacteria and other undesired organisms in a swimming pool **102**.

[0042] Thus, the exemplary self-contained systems described herein permit cleaners to perform cleaning operations in a swimming pool while minimizing the interaction and/or supervision of users. In addition, the exemplary self-contained systems optimize the cleaning modes and/or paths taken by the cleaner, thus reducing the time required for cleaning a swimming pool and efficiently preserving battery life of the cleaner.

[0043] In some embodiments, it is contemplated that any of the cleaners described herein may be "top only" or "bottom only," for example, as opposed to "top/bottom." In some embodiments, it is contemplated that, in addition to or as an alternative to electricity, the source of power may be negative water pressure, such as a suction hose extending from the cleaner to the fluid circulation line of the swimming pool, or positive water pressure, such as a positive pressure water hose extending from a booster pump, for example, to the cleaner.

[0044] Although described herein as an electric cleaner **200**, those of ordinary skill in the art should understand that alternative sources of power can be provided to the cleaner **200** and/or docking station **300**, e.g., inductive charging, positive and/or negative pressure, materials which create their own power, and the like, while the internal intelligence (e.g., a processing device, a printed circuit board (PCB), a controller, and the like) can still be powered through electricity. In particular, the alternative source(s) of power can provide the necessary power for propulsion, steering and/or control of the cleaner **200**. In embodiments where the cleaner **200** is a positive pressure cleaner using water pressure, a booster pump (not shown) can be implemented as a power source.

[0045] While exemplary embodiments have been described herein, it is expressly noted that these embodiments should not be construed as limiting, but rather that additions and modifications to what is expressly described herein also are included within the scope of the invention. Moreover, it is to be understood that the features of the various embodiments described herein are not mutually exclusive and can exist in various combinations and permutations, even if such combinations or permutations are not made express herein, without departing from the spirit and scope of the invention.

What is claimed is:

1. A swimming pool cleaner for a swimming pool, comprising:

a housing including a motor and a storage device, and

a vision system with programming stored on the storage device, wherein the vision system comprises means for identifying debris located in the swimming pool and means for directing the swimming pool cleaner to the debris.

2. The swimming pool cleaner of claim **1**, wherein the vision system is in communication with at least one of the controller and the motor.

3. The swimming pool cleaner of claim **2**, wherein upon identifying debris located in the swimming pool, the vision system actuates the motor to direct the swimming pool cleaner to the debris.

4. The swimming pool cleaner of claim **3**, wherein the vision system actuates the motor to slow down the swimming pool cleaner upon reaching the debris.

5. The swimming pool cleaner of claim **2**, where the vision system actuates the motor to increase suction of the suction pump impeller upon reaching the debris.

6. The swimming pool cleaner of claim **1**, comprising an ultraviolet (UV) light on a bottom surface of the swimming pool cleaner.

7. The swimming pool cleaner of claim **1**, comprising a rechargeable battery disposed in the housing for powering the swimming pool cleaner, and an inductive charging system for recharging the rechargeable battery.

8. A method of regulating a swimming pool cleaner in a swimming pool, comprising:

providing a housing that includes a motor and a storage device, and

providing a vision system with programming stored on the storage device, wherein the vision system comprises

means for identifying debris located in the swimming pool and means for directing the swimming pool cleaner to the debris,

identifying, via the vision system, debris located in the swimming pool, and

directing the swimming pool cleaner to the debris.

9. The method of claim **8**, comprising actuating the motor via the vision system to slow down the swimming pool cleaner upon reaching the debris.

10. The method of claim **8**, comprising actuating the motor via the vision system to increase suction of a suction pump impeller upon reaching the debris.

11. The method of claim **8**, comprising actuating a light positioned on a bottom surface of the swimming pool cleaner to disinfect at least one of a wall, a floor, and water of the swimming pool.

12. The method of claim **8**, comprising powering the swimming pool cleaner with a rechargeable battery disposed in the housing, and recharging the rechargeable battery with an inductive charging system of the swimming pool cleaner.

13. A docking station for a swimming pool cleaner, comprising:

a housing that includes communication means for communicating with the swimming pool cleaner,

wherein the housing includes an opening configured and dimensioned to at least partially receive the swimming pool cleaner, and

wherein upon receipt of the swimming pool cleaner in the opening of the housing, the docking station at least one of (i) automatically recharges a battery of the swimming pool cleaner and (ii) automatically cleans a debris container of the swimming pool cleaner.

14. The docking station of claim **13**, comprising a docking station battery.

15. The docking station of claim **14**, comprising an electrical cable connecting the docking station to a power source for charging the docking station battery.

16. The docking station of claim **14**, comprising an inductive charging system for charging the docking station battery.

17. The docking station of claim **13**, comprising an access door for accessing a docking station debris container.

18. The docking station of claim **13**, comprising an alarm for unwanted intrusion.

19. The docking station of claim **13**, comprising a locking mechanism for detachably securing the swimming pool cleaner within the opening of the housing.

20. A swimming pool cleaner system for a swimming pool, comprising:

a swimming pool cleaner that includes a battery and a debris container, and

a docking station that includes an opening configured and dimensioned to at least partially receive the swimming pool cleaner,

wherein upon receipt of the swimming pool cleaner in the opening of the housing, the docking station at least one of (i) automatically recharges the battery of the swimming pool cleaner and (ii) automatically cleans the debris container of the swimming pool cleaner.

* * * * *