US006101607A

United States Patent [19]

Bachand et al.

[11] **Patent Number: 6,101,607**

[45] **Date of Patent: Aug. 8, 2000**

[54] **LIMIT ACCESS TO PROGRAM FUNCTION**

[75] Inventors: **Anthony Paul Bachand**; **Patrick Samuel Botz**; **Barbara Ann Smith**; **Carol Jean Woodbury**, all of Rochester, Minn.

[73] Assignee: **International Business Machines Corporation**, Armonk, N.Y.

[21] Appl. No.: **09/065,888**

[22] Filed: **Apr. 24, 1998**

[51] **Int. Cl.**[7] **G06F 11/30**; G06F 15/163

[52] **U.S. Cl.** **713/201**; 709/302

[58] **Field of Search** 709/302; 380/4; 713/200, 201; 395/712, 682

[56] **References Cited**

U.S. PATENT DOCUMENTS

5,404,488	4/1995	Kerrigan	395/425
5,490,216	2/1996	Richardson, III .	
5,748,890	5/1998	Goldberg	395/188.01
5,946,685	8/1999	Cramer	707/10

Primary Examiner—Joseph E. Palys
Assistant Examiner—Ronald D Hartman, Jr.
Attorney, Agent, or Firm—Lawrence D. Maxell

[57] **ABSTRACT**

A method, system and computer program product for selectively restricting access to a program function in a computer system having an operating system security mechanism operates via an application programming interface (API) that includes a program function registration API function, an authorization selection API function, and an authorization query API function. In response to a call to the API registration function, the program function is registered in a repository in the computer system. After the program function has been registered, a system administrator can select user authorizations using a software tool that includes calls to the authorization selection API function. The system administrator may select whether a particular user or group of users is authorized to access each registered program function. A programmer can embed a call to the authorization query API function in an application program, which includes or calls the program function. When the application program reaches the call to the authorization query API function, the function is executed and returns an indicator or value indicating whether or not that user is allowed to access the program function.

15 Claims, 15 Drawing Sheets

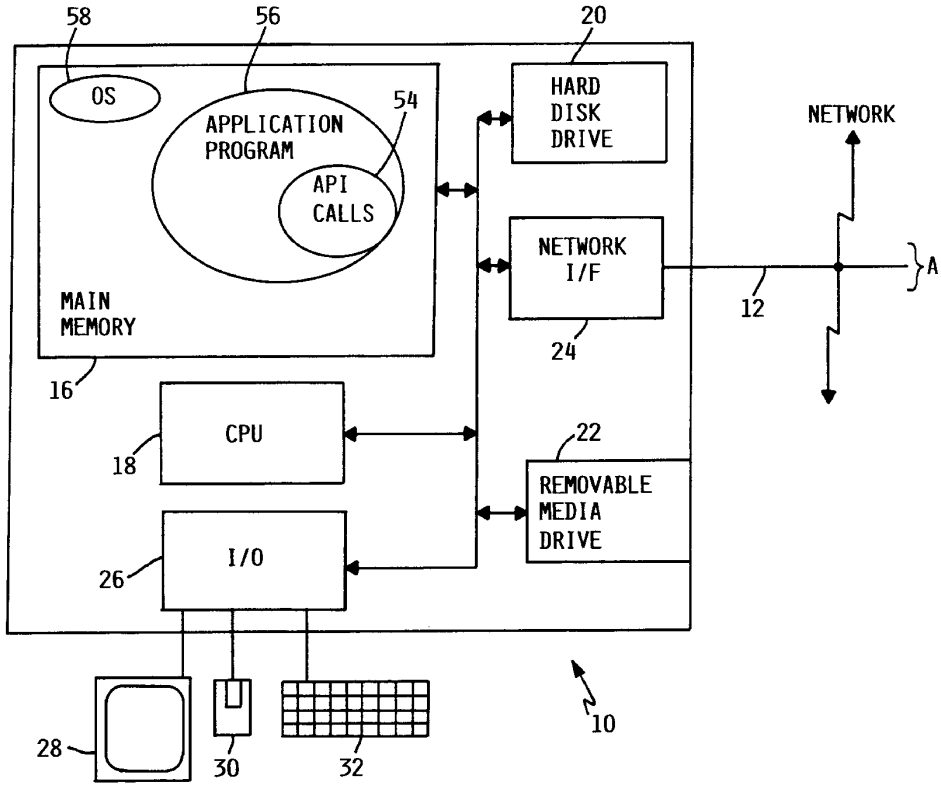

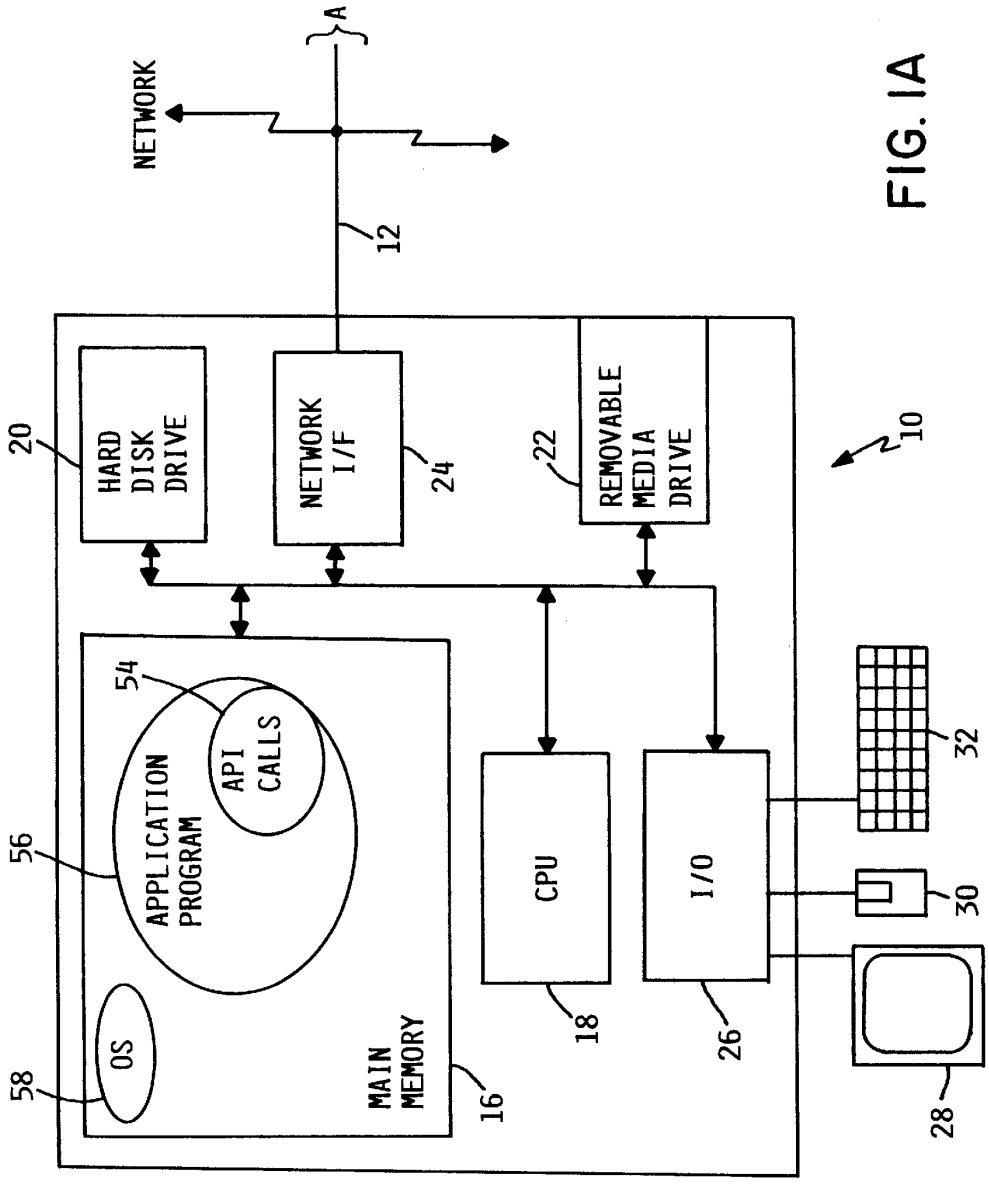
NETWORK
A
12
20
HARD DISK DRIVE
NETWORK I/F
24
22
REMOVABLE MEDIA DRIVE
10
54
API CALLS
56
APPLICATION PROGRAM
58
OS
MAIN MEMORY
16
CPU
18
I/O
26
32
30
28

FIG. 1A

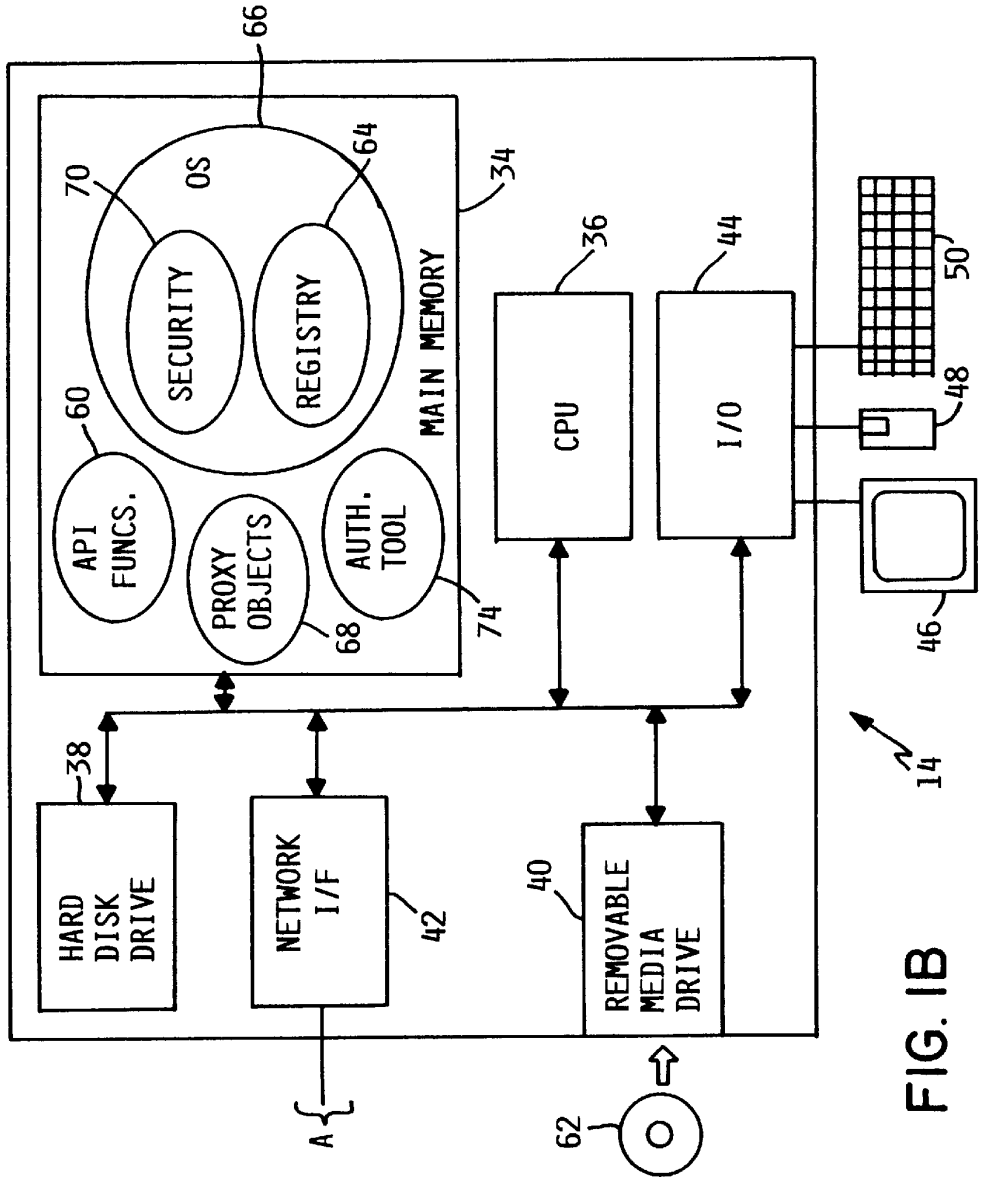
66
70
OS
64
SECURITY
REGISTRY
34
MAIN MEMORY
60
API FUNCS.
PROXY OBJECTS
68
AUTH. TOOL
74
36
CPU
44
I/O
50
48
46
38
HARD DISK DRIVE
NETWORK I/F
42
40
REMOVABLE MEDIA DRIVE
14
A
62

FIG. 1B

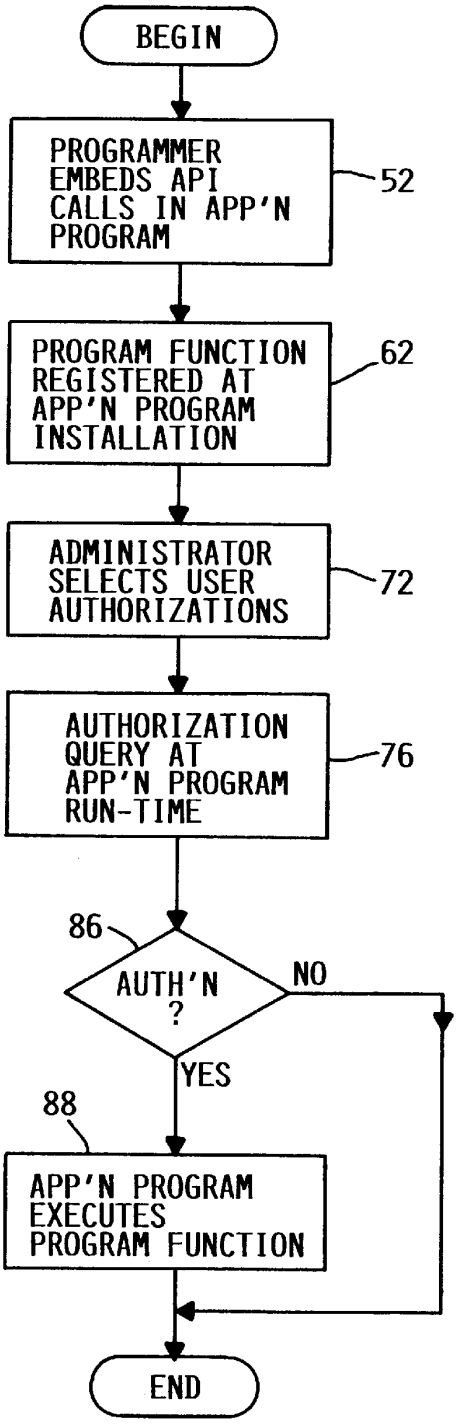
BEGIN
PROGRAMMER EMBEDS API CALLS IN APP'N PROGRAM
52
PROGRAM FUNCTION REGISTERED AT APP'N PROGRAM INSTALLATION
62
ADMINISTRATOR SELECTS USER AUTHORIZATIONS
72
AUTHORIZATION QUERY AT APP'N PROGRAM RUN-TIME
76
86
AUTH'N ?
NO
YES
88
APP'N PROGRAM EXECUTES PROGRAM FUNCTION
END

FIG. 2

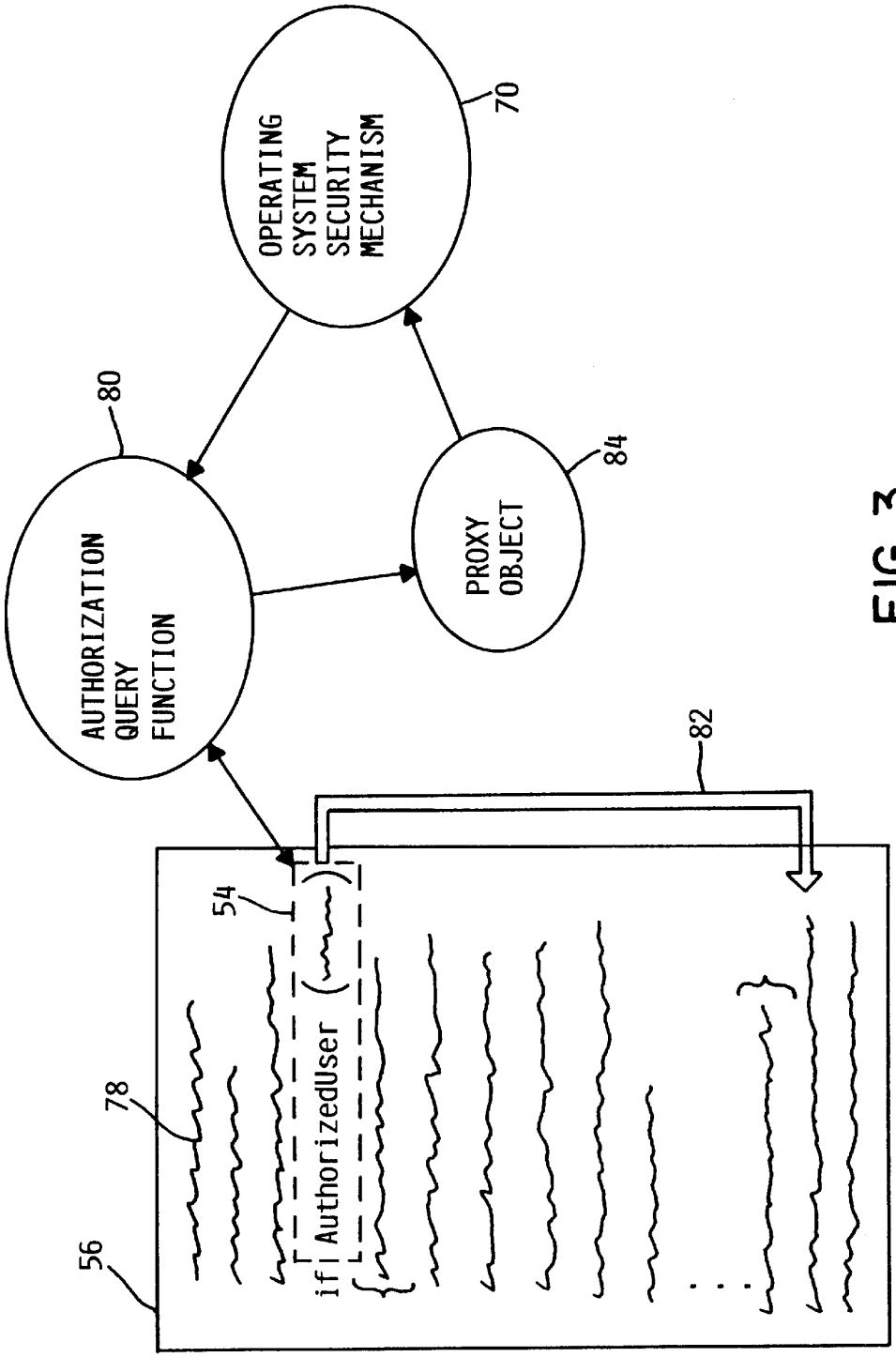
OPERATING SYSTEM SECURITY MECHANISM
70
80
AUTHORIZATION QUERY FUNCTION
PROXY OBJECT
84
82
54
if AuthorizedUser
78
56

FIG. 3

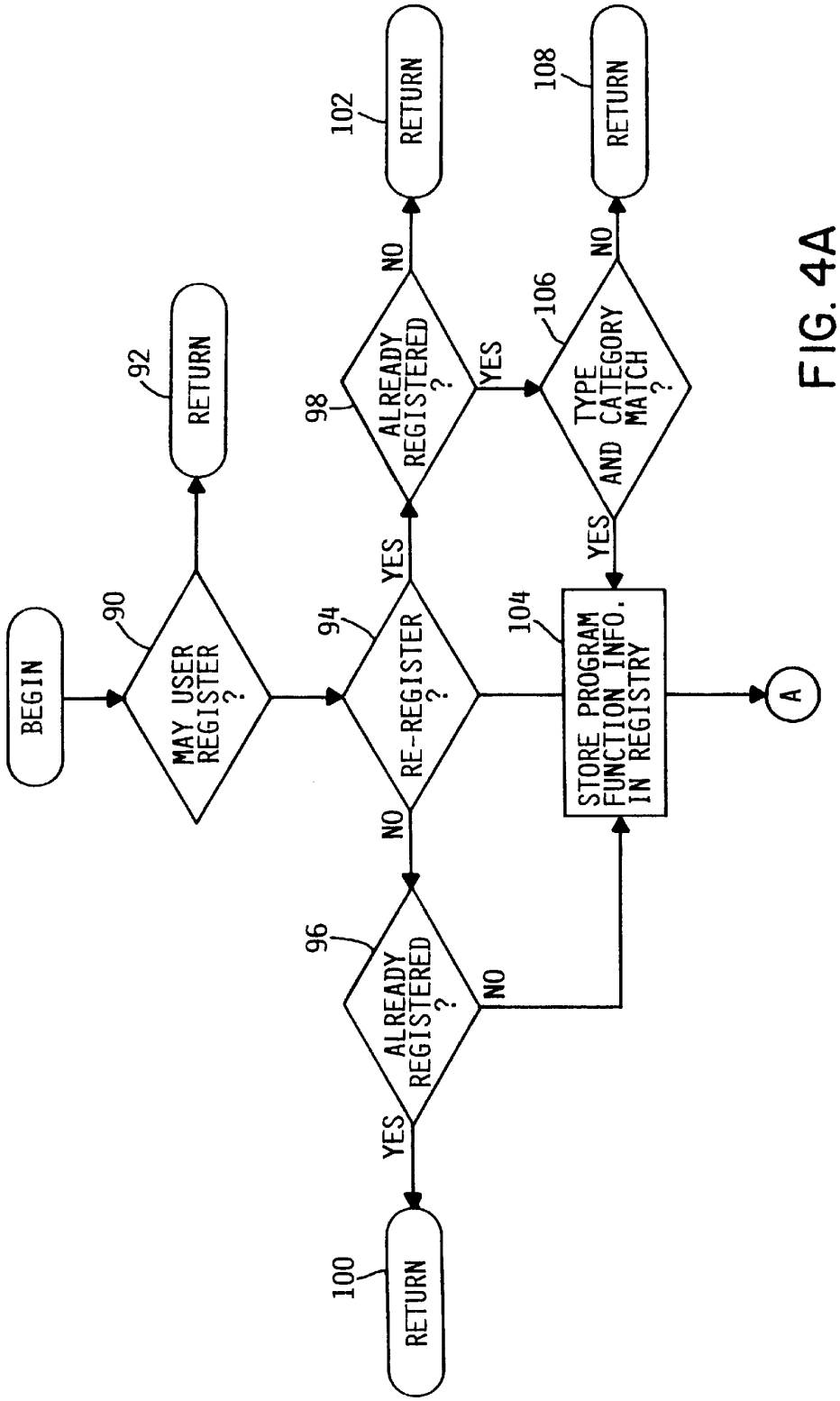
BEGIN
90
MAY USER REGISTER ?
92
RETURN
94
RE-REGISTER ?
YES
NO
98
ALREADY REGISTERED ?
YES
NO
102
RETURN
96
ALREADY REGISTERED ?
YES
NO
100
RETURN
104
STORE PROGRAM FUNCTION INFO. IN REGISTRY
A
106
TYPE AND CATEGORY MATCH ?
YES
NO
108
RETURN

FIG. 4A

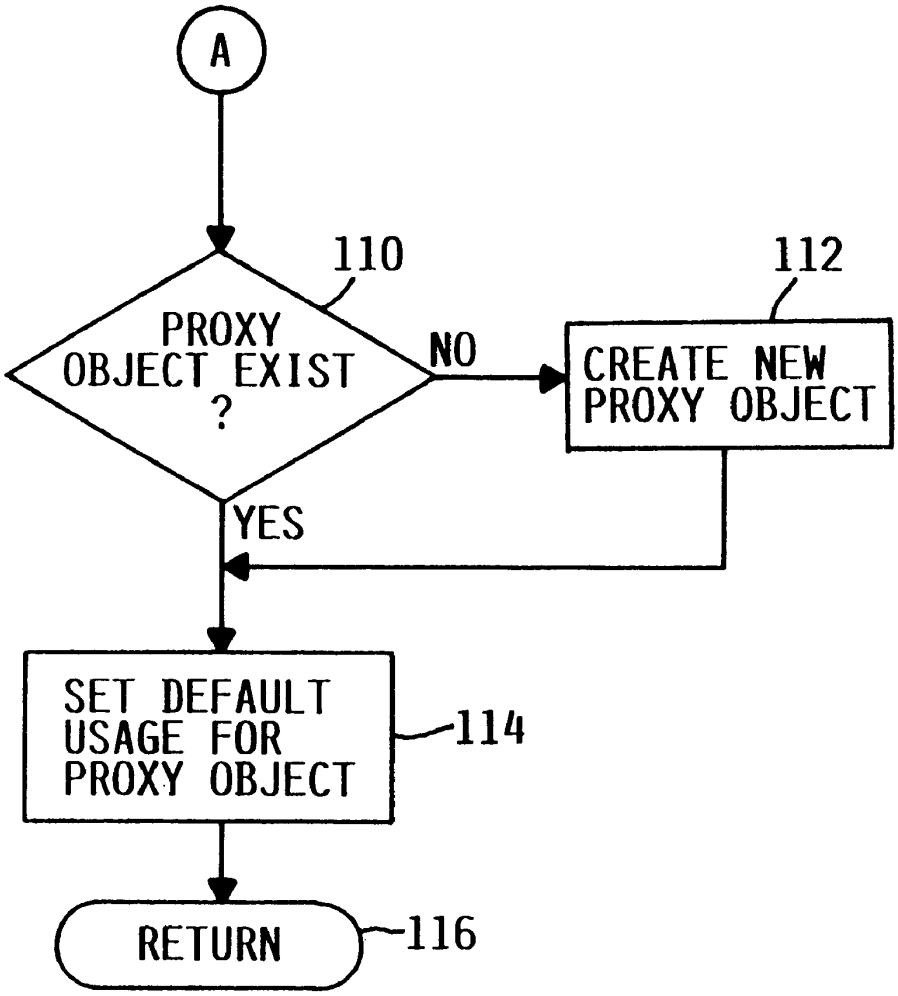
A
110
PROXY OBJECT EXIST ?
NO
112
CREATE NEW PROXY OBJECT
YES
SET DEFAULT USAGE FOR PROXY OBJECT
114
RETURN
116

FIG. 4B

FIG. 5

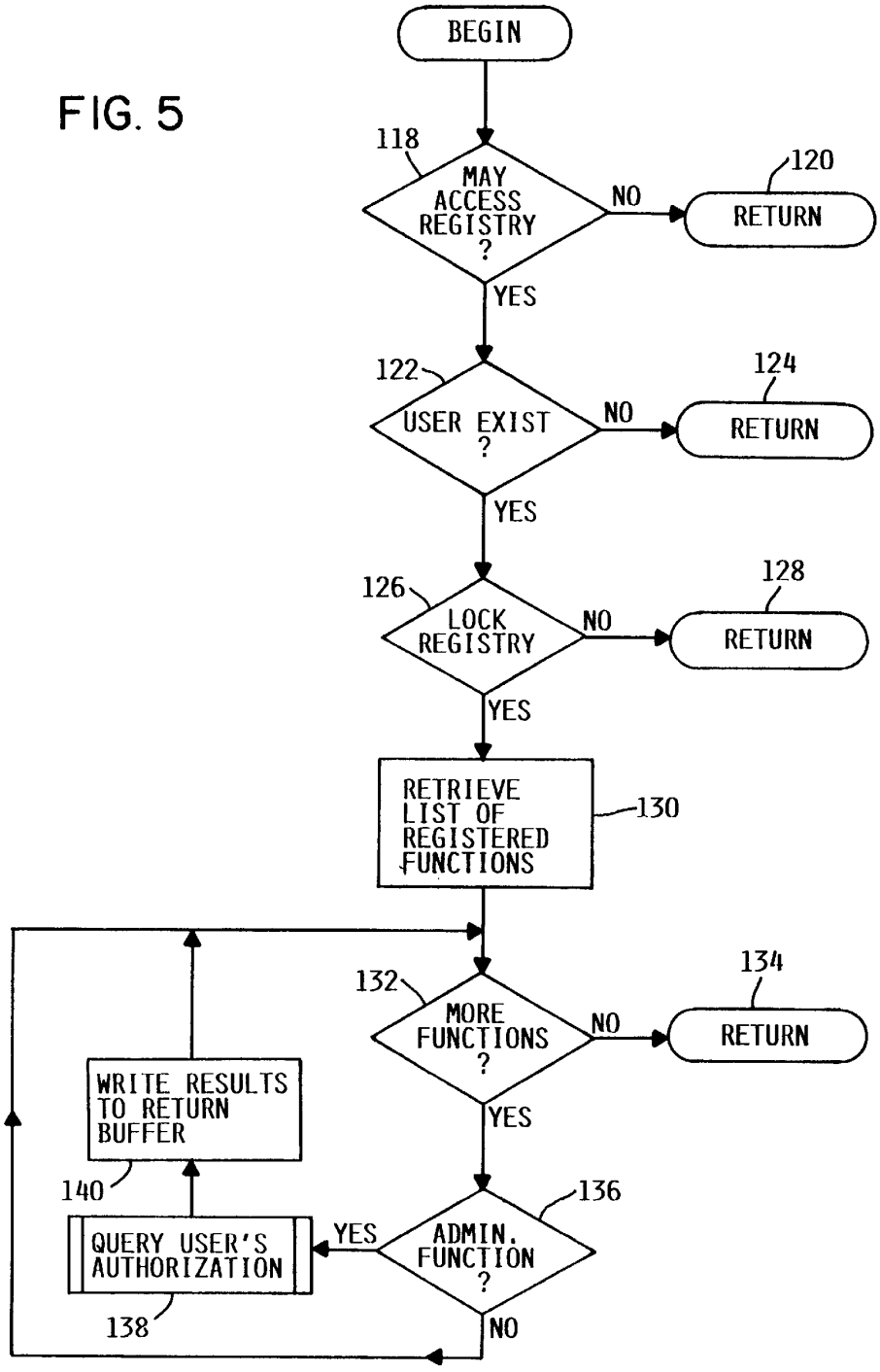
BEGIN
118
MAY ACCESS REGISTRY ?
NO
120
RETURN
YES
122
USER EXIST ?
NO
124
RETURN
YES
126
LOCK REGISTRY
NO
128
RETURN
YES
RETRIEVE LIST OF REGISTERED FUNCTIONS
130
132
MORE FUNCTIONS ?
NO
134
RETURN
YES
WRITE RESULTS TO RETURN BUFFER
140
QUERY USER'S AUTHORIZATION
138
YES
136
ADMIN. FUNCTION ?
NO

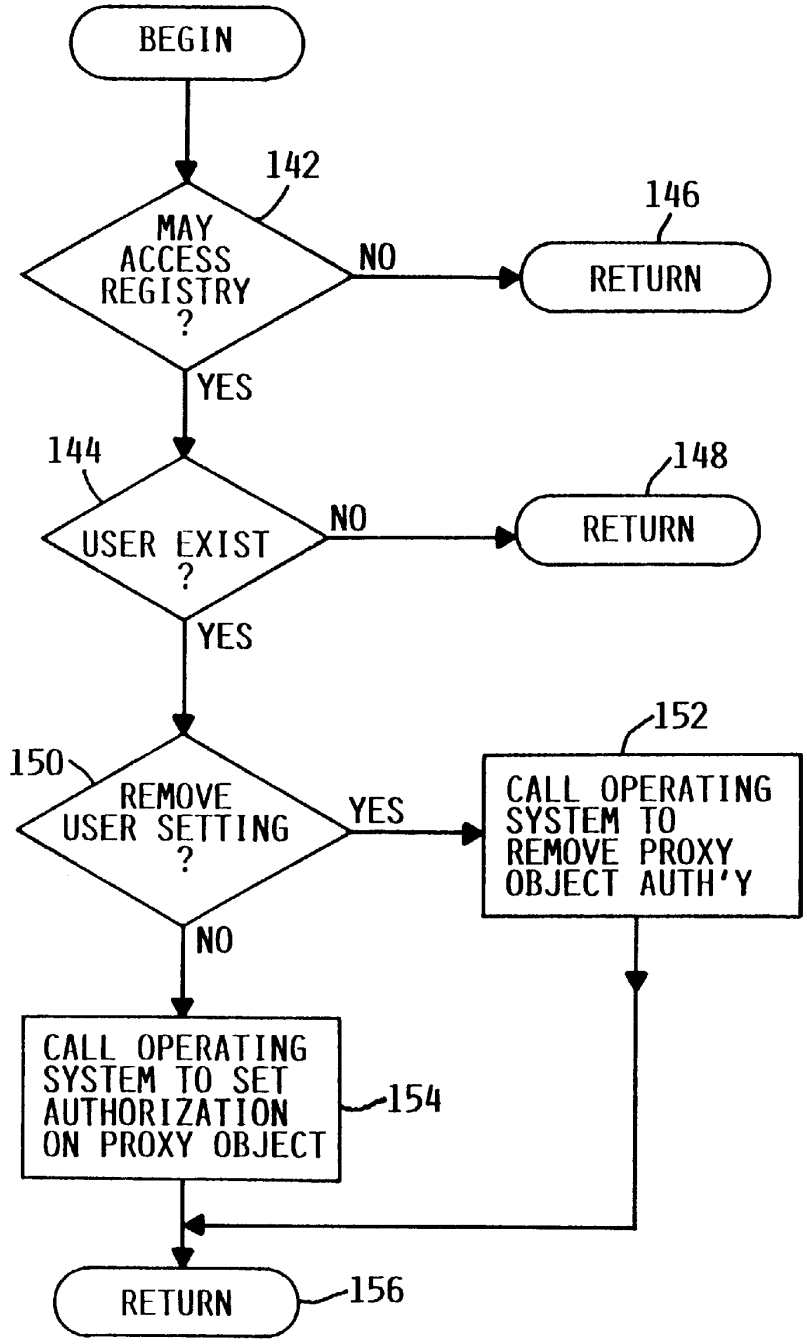
BEGIN
142
MAY ACCESS REGISTRY ?
NO
146
RETURN
YES
144
USER EXIST ?
NO
148
RETURN
YES
150
REMOVE USER SETTING ?
YES
152
CALL OPERATING SYSTEM TO REMOVE PROXY OBJECT AUTH'Y
NO
CALL OPERATING SYSTEM TO SET AUTHORIZATION ON PROXY OBJECT
154
RETURN
156

FIG. 6

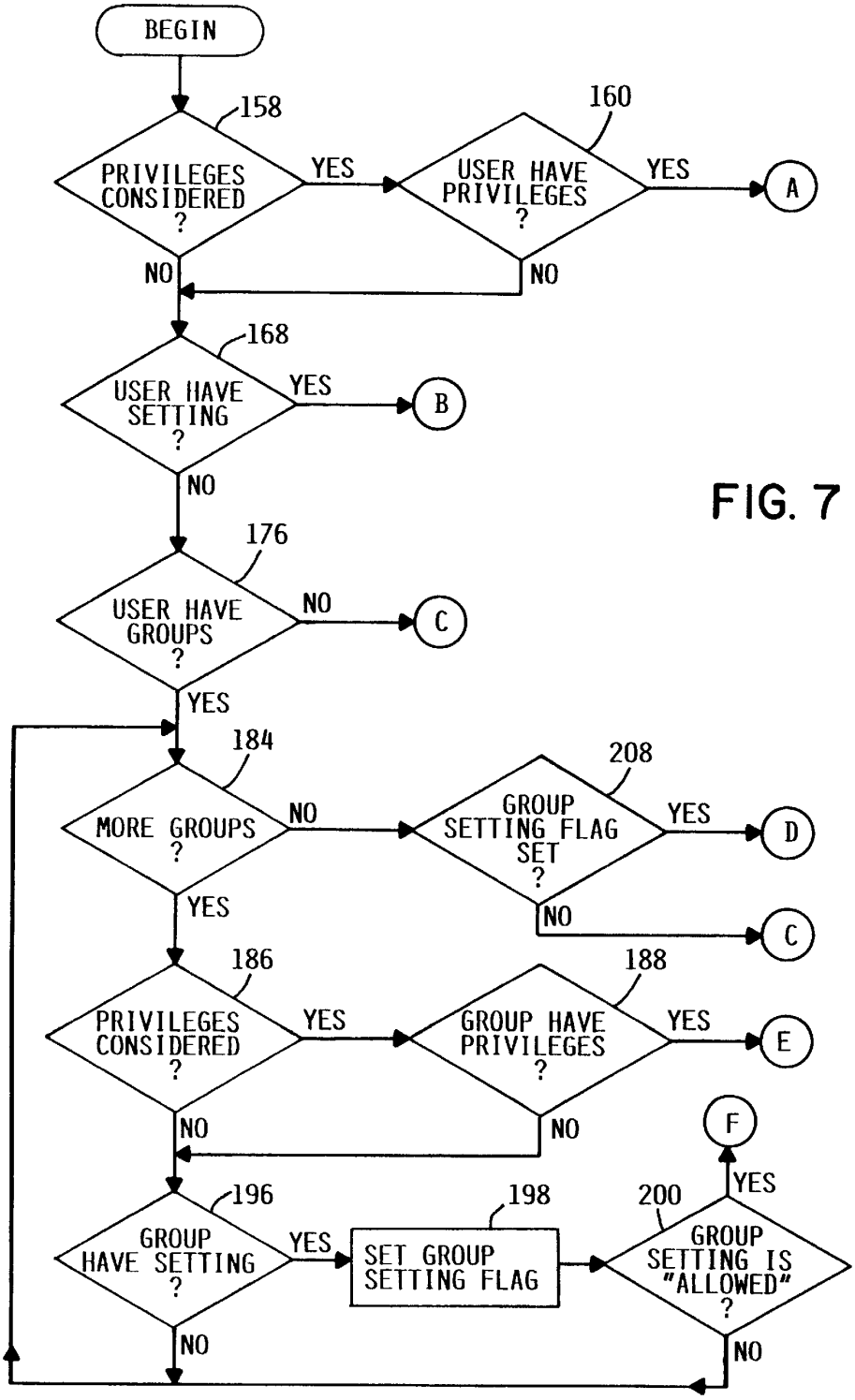
BEGIN
158
PRIVILEGES CONSIDERED ?
YES
160
USER HAVE PRIVILEGES ?
YES
A
NO
NO
168
USER HAVE SETTING ?
YES
B
NO
176
USER HAVE GROUPS ?
NO
C
YES
184
MORE GROUPS ?
NO
208
GROUP SETTING FLAG SET ?
YES
D
NO
C
YES
186
PRIVILEGES CONSIDERED ?
YES
188
GROUP HAVE PRIVILEGES ?
YES
E
NO
NO
F
YES
196
GROUP HAVE SETTING ?
YES
198
SET GROUP SETTING FLAG
200
GROUP SETTING IS "ALLOWED" ?
NO
NO

FIG. 7

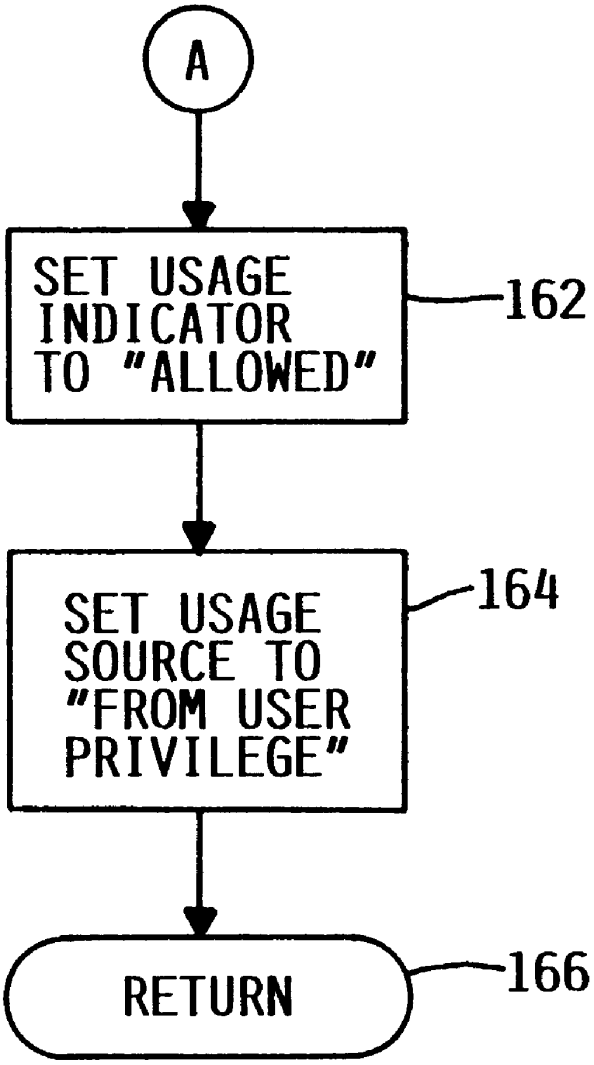
A
SET USAGE INDICATOR TO "ALLOWED"
162
SET USAGE SOURCE TO "FROM USER PRIVILEGE"
164
RETURN
166

FIG. 7A

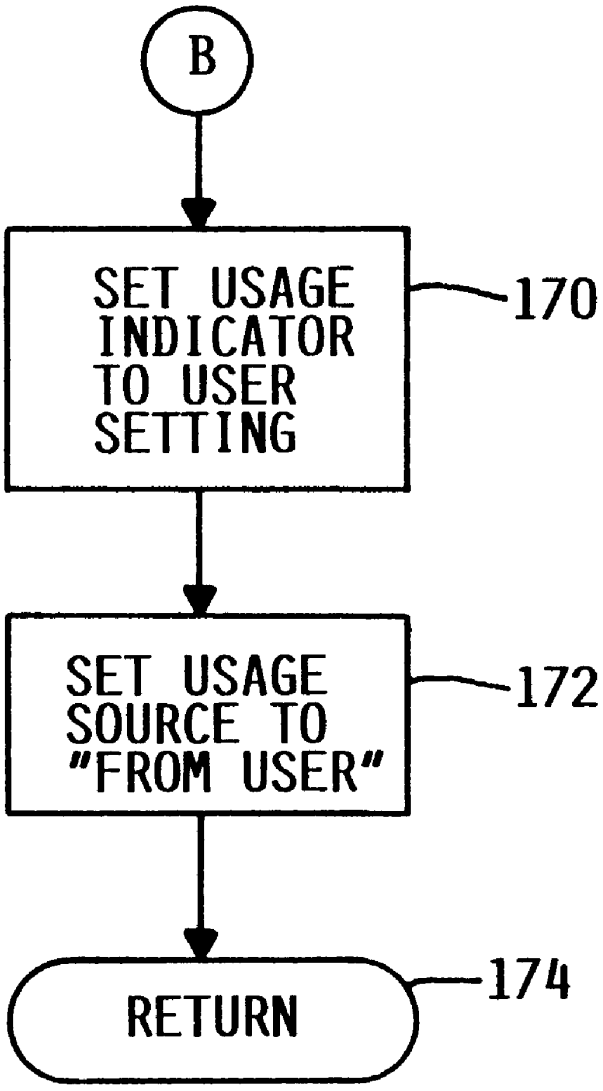
B
SET USAGE INDICATOR TO USER SETTING
170
SET USAGE SOURCE TO "FROM USER"
172
RETURN
174

FIG. 7B

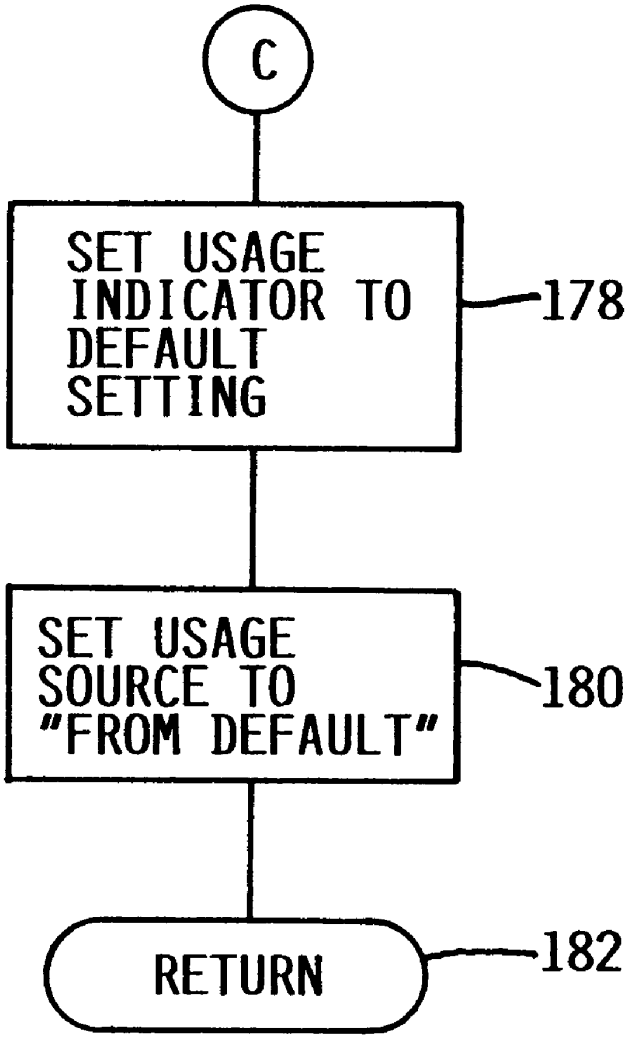
C
SET USAGE INDICATOR TO DEFAULT SETTING
178
SET USAGE SOURCE TO "FROM DEFAULT"
180
RETURN
182

FIG. 7C

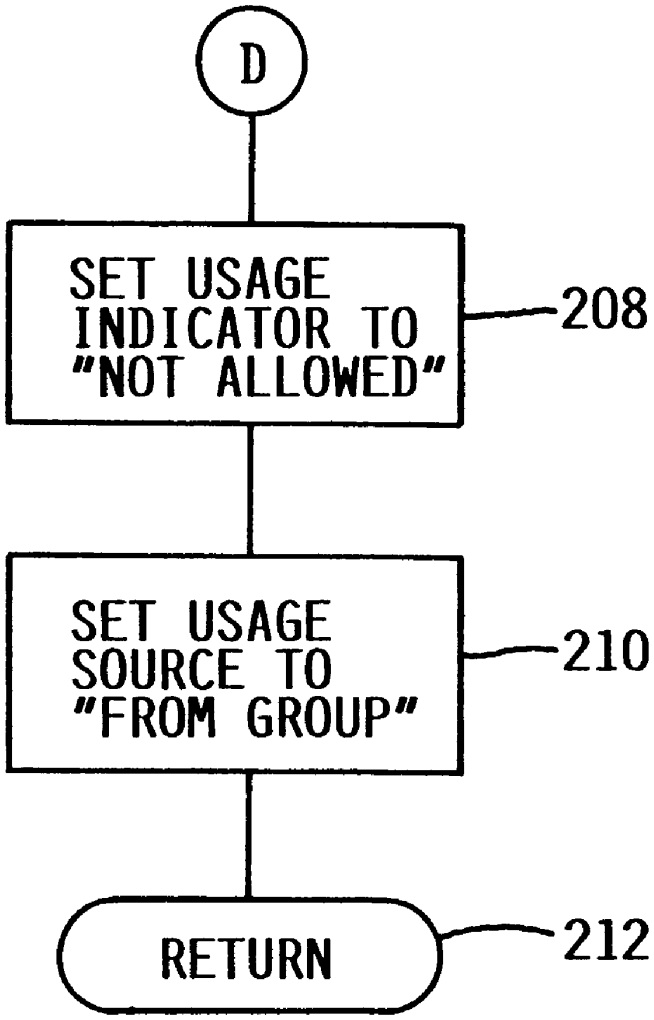
D
SET USAGE INDICATOR TO "NOT ALLOWED"
208
SET USAGE SOURCE TO "FROM GROUP"
210
RETURN
212

FIG. 7D

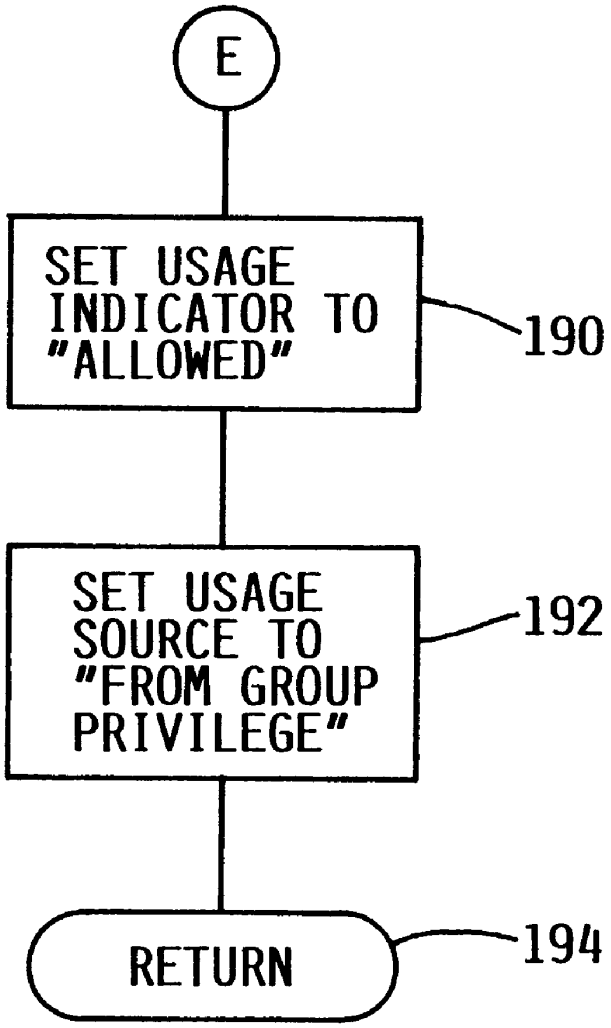
E
SET USAGE INDICATOR TO "ALLOWED"
190
SET USAGE SOURCE TO "FROM GROUP PRIVILEGE"
192
RETURN
194

FIG. 7E

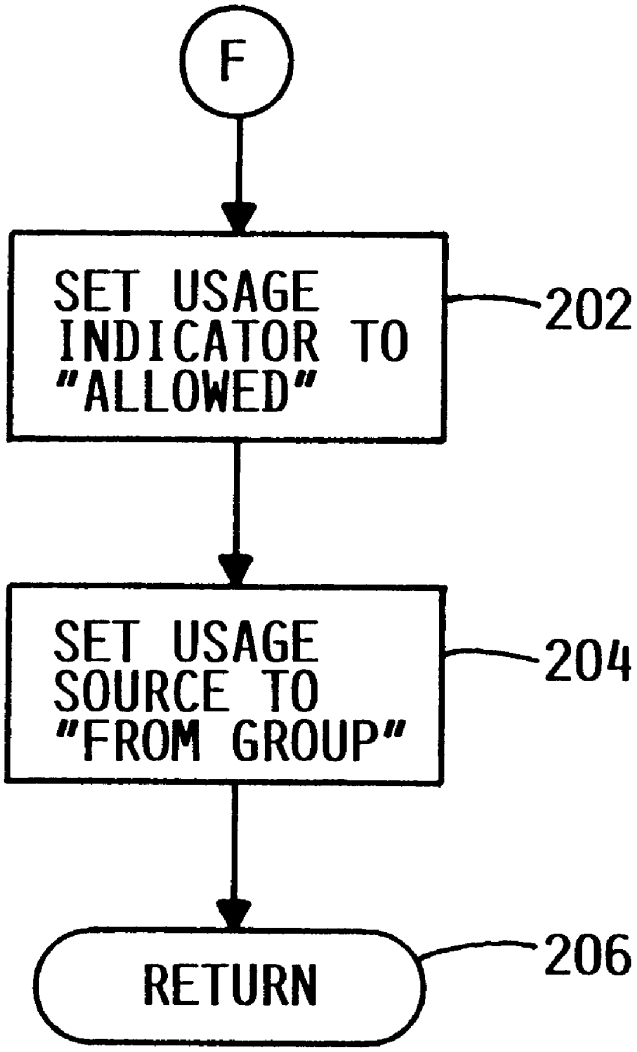
F
SET USAGE INDICATOR TO "ALLOWED"
202
SET USAGE SOURCE TO "FROM GROUP"
204
RETURN
206

FIG. 7F

LIMIT ACCESS TO PROGRAM FUNCTION

BACKGROUND OF THE INVENTION

1. Field of the Invention

The present invention relates generally to computer security and, more specifically, to methods and systems for restricting selected users' access to selected programs or portions of programs.

2. Description of the Related Art

Operating systems and similar software often include security facilities or mechanisms that a system administrator may use to restrict selected users' access to selected program functions or resources. For example, a network administrator may allow only a selected group of users on the network to modify data in a database and prevent other users from doing so. Such security mechanisms typically only allow an administrator to limit access to a program as a whole; they cannot be used to limit access to portions of a program.

In other instances, the security feature may be included in an application program itself. For example, an accounting program package may include a feature that allows an administrator to select which users have access to which functions. Certain users may be given access to, for example, the Accounts Payable functions of the program but not the Accounts Receivable functions, while other users may be given access to the Accounts Receivable functions but not the Accounts Payable functions. Such a security feature may be implemented by hard-coding it into the program. In other words, in response to a user's request to access a certain program function, a code segment in the program obtains the identity of the user (either internally if the user is required to enter a username into the program, or externally from the operating system) and compares the identity to a list of authorized users. If the list indicates that the user is authorized to access that function, the program proceeds to execute the function as requested. If the list indicates that the user is not authorized to access that function, the program does not execute the requested function and may output an error message advising the user that he or she is not authorized.

Hard-coding the security feature into an application program may be reasonably convenient if the computer system is only running a single program, but if the computer system is running many programs, as is of course typical in networked business computing systems, it becomes inconvenient for the system administrator to assign, track and maintain the proper authorizations for all of the programs. Different programs may be written by different vendors and thus may have completely different user interfaces by which the system administrator manages user authorizations. Compounding the difficulty is that a computer network may include different types of computer platforms, such as personal computers operating under the MICROSOFT WINDOWS operating system and IBM AS/400 platforms operating under OS/400. The method by which the network administrator must manage authorizations on one platform may be different from the method by which the network administrator must manage authorizations on another platform.

It would be desirable to provide a consistent, convenient means for managing user authorizations that is platform-independent and that can be used with any application program. These problems are satisfied by the present invention in the manner described below.

SUMMARY OF THE INVENTION

The present invention relates to a method, system and computer program product for selectively restricting access

to a program function in a computer system having an operating system security mechanism. The term "program function" is used in this patent specification to refer to any portion of a computer program that defines a task or goal, and includes within its scope, for example, code modules and other groups of sequential lines of code, an object or object method in an object-oriented program, and subprograms that may be defined by a programming language and referred to in the narrower context of that programming language as a procedure, function, subroutine or similar term. The invention allows a user having special use privileges that are superior to those of other users, who is referred to in this patent specification as an administrator or superuser, to select and set the authorization of each user of the computer system to either grant or deny the user access to the program function from an application program executing or running on the computer system under the user's control. Unlike prior systems in which an administrator can grant or deny access to an entire program as a whole using the security mechanism provided by the operating system, the present invention allows the administrator to grant or deny user authorizations to portions of a program.

In accordance with the method of the present invention, the program function is first registered in a repository in the computer system. The term "repository" as used in this patent specification includes within its scope a conventional operating system registry, but more broadly includes other suitable data storage structures as well. A registry is a well-known computer operating system data structure. Registries are included in, for example, the IBM AS/400, WINDOWS 95 and WINDOWS NT operating systems and are typically used, for example, to register exit points. It is known that an application program may call an operating system facility or function to register something in the registry. What can be registered depends upon the type of platform. (In accordance with convention in the art, the term "platform" may sometimes be used in this patent specification to refer to a computer and its operating system as a cohesive unit.) In a WINDOWS 95 or a WINDOWS NT platform, for example, a file name can be registered. In an OS/400 platform, where the basic unit of data manipulated by the system is known as an object, an object can be registered. The program function may be registered at any convenient time prior to execution by a user of an application program that includes the program function, such as at the time the program is installed in the computer system using an installation program. The system and program product of the present invention include application program interface (API) functions relating to program function registration. A programmer can embed calls to the API registration functions in the installation program.

In certain embodiments of the invention, a proxy file may be created. As with the registration step, the proxy file may be created at any convenient time prior to execution of an application program that includes the program function, such as at installation time. The term proxy "file" is used in this patent specification for convenience to refer broadly to an entity that can be protected from unauthorized access using the underlying operating system security mechanism, and includes within its scope all files, objects and other suitable entities known in the art.

After the program function has been registered, the administrator can select user authorizations using a suitable software tool. The software tool receives input data from the administrator that indicates whether a selected user is granted or denied access to a selected program function. In certain embodiments of the invention the software tool may

include a graphical user interface (GUI) to enhance ease of use. Whether graphical or not, the user interface lists the registered program functions for the administrator. In embodiments in which proxy files are created, each registered program function corresponds to a proxy file. As explained below, the proxy file in effect becomes a "proxy" security mechanism for that program function. Via the user interface, for each program function or group of program functions in the list, the administrator can set an authorization for each user or group of users, indicating whether a user or group of users is granted or denied access to each program function or group of program functions. (in certain embodiments of the invention, the software tool may provide means for grouping the program functions and/or users, such that the administrator can, for example, grant or deny a user access to a pre-defined group of program functions without specifying them individually. The groupings may be hierarchical, flat or any other suitable arrangement.) In embodiments of the invention in which a proxy file is created, the software tool sets user authorizations by calling or invoking the integral security mechanism of the operating system to set the user authorization to a proxy file corresponding to the registered program function. The system and program product of the present invention include API functions relating to selecting user authorizations. A programmer may thus embed calls to the API functions in the authorization selector software tool.

The API of the system and program product includes an authorization query function. A programmer can embed a call to the authorization query function in the application program that includes or calls the program function to be protected against unauthorized use. The function call identifies a program function. The programmer may embed the call, for example, immediately preceding some lines of code that constitute the program function to be protected, and the function call would identify that corresponding program function by a unique name, code or other identifier. After the application program has been installed on the computer system and the program function or functions registered as described above, a user can cause the computer system to execute the application program in the conventional manner. When the application program reaches the call to the authorization query function, the function is executed and returns an indicator or value indicating whether or not that user is allowed to access the program function.

The authorization query function may, in certain embodiments of the invention in which a proxy file is created, determine the user's authorization by attempting to access the proxy file corresponding to the program function identified in the function call. The security mechanism indicates whether or not the user is authorized to access the proxy file, and the authorization query function in turn indicates whether or not the user is allowed to access the corresponding program function. The application program may include branching instructions or similar program flow-controlling code that, in response to the value returned via the authorization query function call, either proceeds to execute the program function or branches around it. The present invention is not, however, limited to any particular programming language.

The term "computing system" as used in this patent specification includes any system of one or more general-purpose platforms, which may be networked together. Indeed, the present invention may be particularly advantageous in a networked computing system. For example, even if one or more computers on the network lack a suitable repository and/or an operating system security mechanism, the invention may advantageously be used to grant or deny access to users operating such computers so long as at least one other computer on the network includes a suitable repository and an operating system security mechanism.

The foregoing, together with other features and advantages of the present invention, will become more apparent when referring to the following specification, claims, and accompanying drawings.

BRIEF DESCRIPTION OF THE DRAWINGS

For a more complete understanding of the present invention, reference is now made to the following detailed description of the embodiments illustrated in the accompanying drawings, wherein:

FIG. **1** is a block diagram of a computer system that allows an administrator to selectively limit users' access to an application program function;

FIG. **2** is a flow diagram illustrating the methods of the present invention;

FIG. **3** illustrates selectively executing a program function in response to an authorization query;

FIG. **4** is a flow diagram illustrating a method for registering and re-registering a program function;

FIG. **5** is a flow diagram illustrating a method for retrieving registered program function information;

FIG. **6** is a flow diagram illustrating a method for setting and changing a user's authorization to access a program function;

FIG. **7** is a flow diagram illustrating a method for querying a user's authorization to access a program function;

FIG. **7**A is a continuation of the flow diagram of FIG. **7**;

FIG. **7**B is a continuation of the flow diagram of FIG. **7**;

FIG. **7**C is a continuation of the flow diagram of FIG. **7**;

FIG. **7**D is a continuation of the flow diagram of FIG. **7**;

FIG. **7**E is a continuation of the flow diagram of FIG. **7**; and

FIG. **7**F is a continuation of the flow diagram of FIG. **7**.

DESCRIPTION OF PREFERRED EMBODIMENTS

As illustrated in FIG. **1**, the invention may be embodied in a system that includes one or more computers. In the illustrated embodiment, a client computer **10** communicates via a network **12** with a server computer **14**. As indicated, other client computers (not shown) may be connected to server computer **14** via network **12** as well, but for purposes of clarity only client computer **10** is shown. Although computer **10** is denominated a "client" and computer **14** is denominated a "server," the present invention is operable under computing system architectures and paradigms other than client-server.

Computer **10** includes hardware elements suitable for providing a general-purpose computing environment for a user, such as a suitable main memory **16**, central processing unit **18**, hard disk drive **20** or similar non-volatile data store, removable media drive **22** such as a floppy disk or CD-ROM, network interface circuitry **24**, input/output circuitry **26**, video display **28**, mouse **30** or similar pointing device, and keyboard **32**. Computer **10** includes similar suitable hardware elements, such as main memory **34**, central processing unit **36**, hard disk drive **38**, removable media drive **40**, network interface circuitry **42**, input/output circuitry **44**, video display **46**, mouse **48**, and keyboard **50**.

The elements of computers **10** and **12** are interconnected in the conventional manner, in which each element in the computer communicates with one or more of the others via one or more busses.

FIG. **2** illustrates a method by which access to selected program functions may be restricted to selected users of computer **10** and similar user computers on network **12**. At step **52** a programmer embeds or includes application program interface (API) calls **54** (FIGS. **1** and **3**) in an application program **56** (FIGS. **1** and **3**). With reference to FIG. **1**, a user may initiate and control the execution of application program **56** on computer **10** in the conventional manner. Computer **10** includes a conventional operating system **58** to facilitate such program execution and other functions typically performed by operating systems. Although the software elements of computer **10** that are principally relevant to the present invention, namely application program **56** and its API calls **54**, are shown for purposes of illustration as existing or residing in memory **16**, persons skilled in the art to which the invention relates will understand that the software is illustrated in this manner because software is typically executed from such main memory and fetched into the main memory on an as-needed basis from other sources such as hard disk drive **20** or network **12**. As such persons will appreciate, these software elements may or may not actually exist simultaneously or in their entirety in memory **16**. By the same token, although application program **56** is illustrated as existing or residing in computer **10** for purposes of clarity, in a true client-server computing system a client portion would exist in computer **10** and a server portion would exist in computer **12**.

An API is a well-known programming device that is typically embodied in a computer program product (e.g., a disk on which the computer program or software is recorded) that is typically purchased by an independent software vendor, who uses the API program product as a component to develop other software for sale to end-users, such as the contemplated user of computer **10**. (The terms "software" and "program" are used synonymously in this patent specification.) In the present invention, the API includes API functions **60** in computer **12**. API functions **60** may be delivered to computer **10** via a program product **62** that interfaces with drive **40** or via a network **12** program product. In accordance with the API modularity concept or paradigm, only calls to API functions **60** are included in application program **56**; the programmer is relieved of any task of having to incorporate or integrate the code itself of functions **60** in application program **56**.

A programmer or similar person may embed API calls **54** in application program **56** in any suitable manner using computer **10**, or the programmer may use computer **12** or any other suitable computer to do so and then transfer application program **56** to computer **10**. Although this step of the process is described as embedding API calls **54**, one is not limited to adding API calls **54** to an existing application program, but of course may write or otherwise obtain a complete application program that initially includes API calls **54**. API calls **54** embedded in application program **56** are important to the invention, but the functional nature of application program **56** is not. Application program **56** may be any suitable type of program. In a computer **10** used in a business, application program **56** may, for example, perform an accounting, payroll, marketing, inventory, manufacturing, or engineering function, or any other suitable function for which a business may use a computer. The term "application program" is used broadly to refer to any software that is not the operating system itself. Thus, application program **56** may not only be business software but alternatively may be a system utility or similar program that only a limited number of end-users would use and that typical businesspersons or clerical personnel would not use.

Returning to FIG. **2**, at step **62** a program function is registered. As explained further below, the program function may be, for example, a group of several lines of code in application program **56** that are to be executed if the user under whose control application program **56** is executed has the proper authorization and bypassed if the user does not have the proper authorization. Step **62** may occur at the time application program **56** is installed on computer **10**. Typically, an application program is installed using an installation tool that copies the proper program files and performs other installation tasks. For example, installation programs are known that, among other functions, register exit points of the application program in a registry of the computer. Indeed, computer **12** includes such a registry **64** as an integral part of its operating system **66**. In the present invention, however, the installation program (not shown) includes a call to an API function **60** (FIG. **1**) that registers the program function in registry **64**. The preferred registration function is described in further detail below, but it is sufficient to note that the function call identifies the program function by a suitable unique identifier, and in response to the call the registration function registers the program function in registry **64**. In addition, the registration function creates a proxy object **68**, the purpose of which is described further below. It is sufficient to note that proxy objects **68** are entities that can be protected by setting user access authorizations using the security mechanism **70** that constitutes another integral part of operating system **66**. Many such program functions that exist in many different application programs may be registered in this manner as each application program is installed on computer **10** or other computer of the computing system. A corresponding proxy object **68** is created for each registered program function.

At step **72** an administrator or similar user having special privileges allowing him or her to oversee or control other users' use of the computing system resources selects the other users' authorizations. The administrator can use an authorization selector tool **74** (FIG. **1**) that displays on display **46** (FIG. **1**) a list of such users, a list of registered program functions, and any other information that may be useful to the administrator in setting each user's authorization. Persons skilled in the art will appreciate that tool **74** can readily obtain a list of users from security mechanism **70**, as security mechanism **70** is conventionally used by an administrator to set the authorizations of users to access objects on the computing system. The term "object" is used (as in proxy objects **68**) because a preferred computer **14** is an IBM AS/400. Proxy objects **68** are analogous to entities referred to as files in many other platforms, such as a WINDOWS 95 or WINDOWS NT platform.

The administrator makes the selections using keyboard **50** and mouse **48** (FIG. **1**). Tool **74** preferably has a graphical user interface (GUI) that presents the information to the administrator and receives input from the administrator using a system of windows, buttons, data entry boxes or other devices in accordance with well-known GUI methodologies and concepts. For each listed user, the administrator may select whether that user is authorized, i.e., granted or denied permission, to access each listed program function. As described further below, the administrator may choose not to set an authorization for each function and may rely upon default settings. As also described further below, the administrator may set authorizations for groups of functions

rather than each function individually. Note that although FIG. **1** illustrates tool **74** as existing on computer **14**, it may exist on another computer on the computing system, and the administrator may perform step **68** using such other computer or perform it remotely using any other computer via network **12**.

Although authorization selector tool **74** may include any suitable features and perform any suitable functions, its important feature with respect to the invention is that it includes API calls to an API function **60** that sets the authorizations, as well as API calls to an API function **60** that retrieves information about the registered program functions from registry **64**. These API functions are described in further detail below, but it is useful to note that the API function **60** that sets the authorizations does so by calling or invoking the services of security mechanism **70** to set the user's authorization to access the proxy object **68** corresponding to the program function.

Step **76** occurs during execution of application program **56**, after application program **56** has been installed and the administrator has set user authorizations to access its program functions. As conceptually illustrated in FIG. **3**, computer **10** executes lines **78** of software code in the conventional manner. Embedded in lines **78** as described above is the API call **54** to an authorization query API function **80**, which is one of API functions **60** (FIG. **1**). API call **54** may have any suitable syntax, name, format and arguments, and it is illustrated in FIG. **3** as being the argument of an "if" statement and as having the function name "AuthorizedUser" only for purposes of illustration. The lines **78** of code between API call **54** and the end of arrow **82** define the protected program function. Authorization query API function **80**, which is described in further detail below, attempts to access a proxy object **84**, which is one of proxy objects **68** (FIG. **1**). Proxy object **84** corresponds to the protected program function. As indicated by step **86**, in response to the attempted access of proxy object **84**, security mechanism **70** either permits or refuses the attempt. If authorization query API function **80** receives a refusal, it returns a value to function call **54** indicating that access is "not allowed." Because function call **54** is the argument of the "if" statement, the "if" statement causes execution to branch around the protected program function as indicated by arrow **82**. Otherwise, if a value indicating that access is "allowed" is returned to function call **54**, the "if" statement causes execution to proceed through the program function, as indicated by step **88**.

FIG. **4** illustrates in further detail the Register/Re-register API function described above with respect to step **62** (FIG. **2**) that is one of API functions **60** (FIG. **1**). The call to this function preferably passes as arguments a number of parameters providing information about the function, including a function identifier, which uniquely identifies the program function over other program functions, and one or more function controls. In an illustrative embodiment of the invention, the function controls include a function category, a function type, a function product identifier, a function group identifier, a default function usage indicator, an honor privileges indicator, and a re-register indicator. The inclusion of such function controls in the Register/Re-register API function call in certain embodiments of the invention may enhance ease of use and convenience for the administrator. Other suitable function control parameters may be included in addition or alternatively to those described.

The function category parameter may be used to indicate whether the program function to be registered is a client function, i.e., the executable code for it resides in and executes on the client computer (e.g., computer **10**) and is included within the relevant portion of the client operating system; a client function not within that portion of the operating system; or a host function, i.e., the executable code for it resides in and executes on the host or server computer (e.g., computer **14**).

The function type parameter may be used to provide further granularity or selectivity within a selected function category. For example, this parameter may be used to indicate whether the program function to be registered is a "function product," which is an abstract higher level of a function hierarchy, a "function group," which is an abstract lower level of the hierarchy, or an actual program function. In other words, in the illustrative embodiment, the function type parameter allows a hierarchy of up to three levels to be defined. Once registered, authorization selector tool **74** may use the information to display the registered program functions in a hierarchical manner. The function product and function group are not actual program functions to which the administrator can grant or deny a user access authorization, but rather are abstract levels of the hierarchy, under which one or more actual program functions may exist.

The function product identifier parameter may be used to indicate a name of a software product to which the program function relates. Authorization selector tool **74** may display the product identifier in addition to the function name as a means to aid the administrator in identifying and understanding the purpose of the program function.

The function group identifier parameter may be used to identify the program function to be registered as a member of an abstract function group that has already been defined and registered.

The default usage indicator parameter may be used to indicate whether the default authorization for the program function to be registered is "allowed," i.e., access granted, or "not allowed," i.e., access denied. If the administrator has not set a user's authorization to either grant or deny access with respect to a certain program function, an attempt by that user to access that program function is either granted or denied in accordance with this default usage indicator.

The honor privileges indicator parameter may be used to indicate whether to respect special privileges a user may have in determining whether or not to allow access. In the AS/400 platform, it is known that a user may be granted what is referred to as the all objects ("*ALLOBJ") privilege, which normally allows that user to access any object on the computing system. The honor privileges indicator parameter indicates whether a user's "*ALLOBJ" privilege should override any authorization the administrator may set using tool **74**.

The re-register indicator parameter may be used to indicate whether the registration request is a request to register a new program function not previously registered or a request to update the registration information relating to an already registered program function.

As noted above, a call to the Register/Re-register API function, which may or may not include the above-described function control parameters, initiates the method illustrated in FIG. **4**. At step **90** it is determined whether the user under whose control application program **56** is being installed in fact has the authority to use registry **64**. (See FIG. **1**.) Security mechanism **70** of operating system **66** may be set to grant or deny access to any object, including registry **64**, and a typical end-user in a business environment would not likely have the privileges necessary to access registry **64**. More typically, only computing system administrators or

similar personnel have the necessary privileges to install new software and, in particular, access registry **64**. If the user does not have these privileges, the Register/Re-register API function proceeds to step **92** and returns to the function call. Although not illustrated for purposes of clarity, a suitable step of generating an error message or similarly handling such an error condition may be interposed between steps **90** and **92** or included in place of step **92**.

If the user has the necessary privilege to access registry **64**, at step **94** it is determined whether the re-register indicator indicates registration of a new program function or updating an already registered function. If the former, at step **96** it is determined for error-checking purposes whether the identified program function is already registered in registry **64**. If the latter, at step **98** it is similarly determined whether the program function is already registered. If the registration status of the function is contrary to the re-register indicator, the Register/Re-register API function proceeds to step **100** or **102** and returns to the function call. Although not illustrated for purposes of clarity, suitable steps of generating error messages or similarly handling such error conditions may be included in addition to or in place of steps **100** and **102**. Although significant error-checking steps are illustrated, persons skilled in the art will appreciate that further steps that check for error conditions may be included throughout these API functions in accordance with routine programming practices.

If the registration request is a request to register a new program function, and that function is not already registered, at step **104** the Register/Re-register API function stores the above-described program function information in registry **64**. If the registration request is a re-register request, and the program function is already registered, at step **106** it is determined whether the function type and function category specified as function control parameters match the values of those function controls already stored in registry **64**. This step is included because the function type and function category preferably cannot be modified. If they match, the Register/Re-register API function proceeds to step **104**, described above. If not, it proceeds to step **108** and returns to the function call. As described above with respect to with steps **100** and **102**, suitable steps of generating error messages or handling the error condition may be included in addition to or in place of step **108**.

Following step **104**, the Register/Re-register API function proceeds to step **110**, at which it is determined whether a proxy object **68** (FIG. **1**) corresponding to the program function to be registered exists. If a corresponding proxy object **68** does not exist, at step **112** a new proxy object **68** is created, and the Register/Re-register API function proceeds to step **114**. If a corresponding proxy object **68** exists, at step **114** the services of security mechanism **70** are invoked to set the access authorization on the proxy object **68** to the default setting indicated by the default usage indicator parameter. At step **116** the Register/Re-register API function returns to the function call.

Although not illustrated, a Deregister API function may be included for convenience that removes a registered program function from registry **64**.

FIG. **5** illustrates a Retrieve Function Information API function that may be used with respect to step **72** (FIG. **2**) and is one of API functions **60** (FIG. **1**). Thus, this API function is used by authorization selector tool **74**. A call to this function passes as arguments the name or similar information identifying one or more registered program functions and the username or similar information identifying a user of the computer system. In response, the function returns a buffer that has in it the information about that program function that is stored in registry **64** and the user's authority to the proxy object that accesses it. This information is described above with respect to the Register/Re-register API function.

At step **118** the Retrieve Function Information API function determines whether the user under whose control the Retrieve Function Information API function is being executed in fact has the authority to use registry **64**. This step is thus similar to step **90** described above with respect to FIG. **4**. Because the call to the Retrieve Function Information API function is included in authorization selector tool **74** in the illustrated embodiment of the invention, step **118** in effect determines whether it is an administrator who is using authorization selector tool **74**. If it is not an administrator, the Retrieve Function Information API function proceeds to step **120** and returns to the function call and, alternatively or in addition, returns an error message or handles this error condition in some other suitable manner. If it is an administrator using tool **74**, at step **122** it is determined whether the user identified by the function call parameter exists. The Retrieve Function Information API function can invoke the services of security mechanism **70** to retrieve user information in the conventional manner known in the art. If the identified user does not exist, at step **124** the Retrieve Function Information API function returns to the function call and, alternatively or in addition thereto, returns an error message or handles this error condition in some other suitable manner. If the identified user exists, at step **126** it is determined whether registry **64** can be locked or whether it is already locked by some other program or function that is simultaneously attempting to access it. If registry **64** cannot be locked, at step **128** the Retrieve Function Information API function returns to the function call and, alternatively or in addition, returns an error message or handles this error condition in some other suitable manner. If registry **64** can be locked, thus preventing concurrent access by some other program or function, the Retrieve Function Information API function proceeds to step **130**.

At step **130** the Retrieve Function Information API function retrieves a list that includes information about one or more registered program functions from registry **64**. At step **132**, if all functions in this list have been processed, the Retrieve Function Information API function proceeds to step **134** and returns to the function call. Otherwise, it proceeds to step **136** to process the next function in the list. At step **136** it is determined whether the next program function is an administrable function, i.e., an actual program function rather than an abstract hierarchy level. If it is not an actual program function, the Retrieve Function Information API function skips it and returns to step **132** to process the next program function in the list.

If the program function is an actual or administrable program function, at step **138** the Authorization Query API function is called. A call to this function passes as an argument the name or other information identifying a user. This user information may have been provided as an argument in the call to the Retrieve Function Information API function. In response to the call to Authorization Query API function, it returns a result indicating whether the specified user is authorized to access the specified program function. The Authorization Query API function is described below with respect to FIG. **7** in further detail. Following step **138**, at step **140** the Retrieve Function Information API function writes the retrieved program function information to a buffer

that the calling program can access. As noted above, when all functions in the list have been processed in this manner, control returns to the API function call at step **134**.

FIG. **6** illustrates a Set/Change User Authorization API function that may be used with respect to step **72** (FIG. **2**) and is another one of API functions **60** (FIG. **1**). Thus, this API function is used by authorization selector tool **74**. A call to this function may pass as arguments the name or similar information identifying a registered program function, the username or similar information identifying a user of the computer system, an authorization removal indicator, and an authorization setting. Steps **142** and **144** are similar to steps **118** and **122** described above with respect to FIG. **5**, determining whether the person using tool **74** has the requisite authorization and whether the identified user exists. Steps **146** and **146** represent the returns to the function call or error handling routines. If no such error conditions arise, the Set/Change User Authorization API function proceeds to step **150**.

At step **150** it is determined whether the authorization removal indicator parameter indicates that any authorization to which the identified user is currently set is to be removed. Once removed, an attempt by that user to access that program function would be resolved in accordance with the default authorization for that program function, taking into account whether privileges are to be honored. In accordance with the authorization removal indicator, the authorization is either removed at step **152** or set to the authorization setting parameter, i.e., access authorized or access not authorized, at step **154**. Both steps **152** and **154** operate by invoking the services of security mechanism **70** on the corresponding proxy object **68**. (See FIG. **1**.) Following step **154**, Set/Change User Authorization API function returns to the function call at step **156**.

FIGS. **7** and **7A–7F** illustrate the Authorization Query API function that may be used with respect to step **76** (FIG. **2**) and is another one of API functions **60** (FIG. **1**). Thus, this API function is called from within application program **56**. (See also FIG. **3**.) As described above, the user is the individual under whose control application program **56** is executing. In a networked computer system such as that illustrated in FIG. **1**, the user would provide a username or other identifying information when he or she logs in to the system on computer **10**. A call to the Authorization Query API function passes as an argument the name or similar information identifying a registered program function. At step **158** it is determined whether the honor privileges indicator is set to indicate that any special privileges a user may have must be respected in determining whether or not to allow access to the identified program function. If privileges are to be respected, at step **160** it is determined whether the identified user has any such privileges. If the user has such privileges, the Authorization Query API function proceeds to the step **162**, illustrated in FIG. **7A**. Referring briefly to FIG. **7A**, the usage indicator value that is returned to the function call is set to "allowed," thereby indicating that the identified user is allowed to access the identified program function. At step **164** a usage source indicator that is also returned to the function call is set to "from user privilege." The usage source indicator provides information relating to the reason why access was allowed or not allowed. Application program **56** or other calling program may use the usage source indicator in any suitable manner. At step **166** the Authorization Query API function returns to the function call.

Returning to FIG. **7**, if it is determined at step **158** that privileges are not to be considered, or if it is determined at step **160** that the user has no such privileges, then the Authorization Query API function proceeds to step **168**. At step **168** it is determined from security mechanism **70** whether the identified user has any authorization setting on the proxy object **68** corresponding to the identified program function. As described above, the administrator may or may not have set a user's authorization to either grant or deny access to a certain program function. If the user's authorization is set, the Authorization Query API function proceeds to step **170**, illustrated in FIG. **7B**. At step **170** the usage indicator that is returned to the function call is set to the same value as the user's authorization. In other words, if the user's authorization was set to "allowed," the usage indicator is set to "allowed," and if the user's authorization was set to "not allowed," the usage indicator is set to "not allowed." At step **172** the usage source indicator is set to "from user." At step **174** the Authorization Query API function returns to the function call.

Returning to FIG. **7**, if at step **168** it is determined that the user does not have any authorization setting, the Authorization Query API function proceeds to step **176**. At step **176** it is determined whether any groups are defined for the user. It is known that security mechanism **70** may grant a user access to all objects belonging to a certain group via a group authorization rather than via individual authorizations for each object. Thus, the Authorization Query API function may use security mechanism **70** to determine if the user has any such groups. If the user does not have any such groups, the Authorization Query API function proceeds to step **178**, illustrated in FIG. **7C**. At step **178** the usage indicator is set to the default value. At step **180** the usage source indicator is set to "from default." At step **182** the Authorization Query API function returns to the function call.

Returning to FIG. **7**, if at step **176** it is determined that the user has groups, the Authorization Query API function proceeds to step **184**. At step **184** it is determined whether all groups have been processed. If there are more groups to process, the Authorization Query API function proceeds to step **186**. Step **186** is similar to steps described above at which it is determined whether privileges are to be considered, but the privileges are that of the group being processed rather than of a specified user. If privileges are to be considered, at step **188** it is determined whether the group has any such privileges. If the group has such privileges, the Authorization Query API function proceeds to step **190**, illustrated in FIG. **7E**. At step **190** the usage indicator is set to "allowed." At step **192** the usage source indicator is set to "from group privilege." At step **194** the Authorization Query API function returns to the function call.

Returning to FIG. **7**, if at step **186** it is determined that group privileges are not to be considered, or it is determined at step **188** that the group has no such privileges, then the Authorization Query API function proceeds to step **196**. At step **196** it is determined whether the group has an authorization setting. If it does not, the Authorization Query API function returns to step **184** to process the next group. If it does, at step **198** an indicator or group authorization flag is set to note for reference at a later step that a group was found that had an authorization setting. Following step **198**, at step **200** it is determined whether that setting was "allowed." If the setting is not "allowed," the Authorization Query API function returns to step **184** to process the next group. If the setting is "allowed," the Authorization Query API function proceeds to step **202**, illustrated in FIG. **7F**. At step **202** the usage indicator is set to "allowed." At step **204** the usage source indicator is set to "from group." At step **206** the Authorization Query API function returns to the function call.

If at step **184** it is determined that all groups have been processed, the Authorization Query API function proceeds to step **208**. At step **208** it is determined if the group authorization flag is set. If the flag is set, the Authorization Query API function proceeds to step **208**, illustrated in FIG. 7D. At step **208** the usage indicator is set to "not allowed." At step **210** the usage source indicator is set to "from group." At step **212** the Authorization Query API function returns to the function call. If the flag is not set, the Authorization Query API function proceeds to step **178**, illustrated in FIG. 7C and described above.

The present invention may provide a solution to the problem of selectively restricting users' access to program functions independently of the type of platforms on which the users' application programs run. The above-described embodiment illustrates the invention in a computing system in which the user operates computer **10** that is connected via network **12** to computer **14** on which security mechanism **70** and registry **64** reside. Operating system **58** of computer **10** need not be the type of operating system that provides multi-user security, and may not even be the type that provides a suitable registry. An IBM AS/400 platform, for example, is a type that provides a suitable security mechanism **70** and registry **64**, but a WINDOWS 95 operating system is not. Thus, by providing an AS/400 platform somewhere on the networked computing system with the above-described API functions, users' access to application program functions can be selectively restricted even if the user runs the application program on a WINDOWS 95 platform elsewhere on the networked computing system.

Other embodiments and modifications of the present invention will occur readily to those of ordinary skill in the art in view of these teachings. Therefore, this invention is to be limited only by the following claims, which include all such other embodiments and modifications when viewed in conjunction with the above specification and accompanying drawings.

What is claimed is:

1. A method for limiting access to a program function in a computer system and an application program interface with an authorization query function and a registration function, comprising the steps of:

registering said program function in a repository in said computer system by executing an application program interface function call to said registration function;

selecting user authorizations, said step of selecting user authorizations comprising the steps of:

providing a list of registered program functions to an administrator via a user interface; and

for each registered program function in said list, said administrator setting an authorization corresponding to each of a plurality of users via said user interface, said authorization indicating whether said user is authorized to access said registered program function;

executing, under control of a user, an application program having access to said program function and having an embedded application program interface function call to said authorization query function, said application program interface function call situated in application program code in association with said program function protected against unauthorized access, said authorization query function returning a response in response to execution of said function call;

determining whether said response indicates said user is authorized to access said program function; and

executing said program function only if said user is authorized to access said program function.

2. The method recited in claim **1**, wherein said step of registering said program function in a repository comprises the step of registering said program function in a registry of an operating system having a security mechanism for granting and denying individual users access to selected files.

3. The method recited in claim **2**, wherein:

said step of registering a program function in a repository further comprises the step of creating a proxy file corresponding to said program function;

said step of setting an authorization corresponding to each user of a plurality of users via said user interface comprises the step of calling said security mechanism to set an operating system user authorization for access to said proxy file; and

said authorization query function generates said response in response to said operating system user authorization for access to said proxy file.

4. The method recited in claim **1**, wherein said step of registering said program function in a repository is performed by execution of an installation program for installing said application in said computer system.

5. A computer program product for use in a computer system for limiting access to an application program function, said computer program product comprising at least one signal-bearing medium carrying thereon:

an application program interface comprising a registration function and an authorization query function, said registration function registering said program function in a repository in said computer system in response to execution of a function call to said registration function in said application program, said authorization query function returning a response in response to execution of a function call to said authorization query function, said response indicating whether a user under whose control said application program executes is authorized to access said program function; and

an authorization selector tool comprising means for providing a list of registered program functions to an administrator via a user interface, means operable in response to input provided by said administrator via said user interface for setting an authorization corresponding to each user of a predetermined plurality of users for each registered program function in said list, said authorization indicating whether said user is authorized to access said registered program function.

6. The computer program product recited in claim **5**, wherein:

said registration function registers said program function in a registry of an operating system having a security mechanism for granting and denying individual users access to selected files.

7. The computer program product recited in claim **6**, wherein:

said registration function creates a proxy file corresponding to said program function;

said means operable in response to input provided by said administrator via said user interface for setting an authorization calls said security mechanism to set an operating system user authorization for access to said proxy file; and

said authorization query function generates said response in response to said operating system user authorization for access to said proxy file.

8. A system for limiting access to an application program function in a computer system, comprising:

application program registration means including a function call to a registration function and including a registration function for registering said program function in a repository in said computer system in response to execution of said function call to said registration function in an application program;

application program query means including a function call to an authorization query function and including an authorization query function returning a response in response to execution of said function call to said authorization query function, said response indicating whether a user under whose control said application program executes is authorized to access said program function; and

an authorization selector tool comprising means for providing a list of registered program functions to an administrator via a user interface, means operable in response to input provided by said administrator via said user interface for setting an authorization corresponding to each user of a predetermined plurality of users for each registered program function in said list, said authorization indicating whether said user is authorized to access said registered program function.

9. The system recited in claim **8**, wherein:

said function call to said registration is embedded in said application program;

said registration function exists in said computer system outside said application program;

said function call to said authorization query function is embedded in said application program; and

said authorization query function exists in said computer system outside said application program.

10. The system recited in claim **8**, wherein said registration function registers said program function in a registry of an operating system having a security mechanism for granting and denying individual users access to selected files.

11. The computer program product recited in claim **10**, wherein:

said registration function creates a proxy file corresponding to said program function;

said means operable in response to input provided by said administrator via said user interface for setting an authorization calls said security mechanism to set an operating system user authorization for access to said proxy file; and

said authorization query function generates said response in response to said operating system user authorization for access to said proxy file.

12. A method for limiting access to an application program function in a computer system having a repository representing an authorization corresponding to each user of a predetermined plurality of users for each said application program function, said authorization indicating whether said user is authorized to access said program function, said computer system further having an authorization selector tool for updating said repository in response to input from an administrator setting each said authorization, the method comprising the steps of:

embedding in an application program pre-run-time portion a function call to a registration function existing in said computer system outside said application program, said registration function registering said program function in a repository in said computer system in response to execution of said function call to said registration function; and

embedding in an application program run-time portion a function call to an authorization query function existing in said computer system outside said application program, said authorization query function returning a response in response to execution of a function call to said authorization query function, said response indicating whether a user under whose control said application program executes is authorized to access said program function.

13. The method recited in claim **12**, wherein said registration function registers said program function in a registry of an operating system having a security mechanism for granting and denying individual users access to selected files.

14. The method recited in claim **13**, wherein:

said registration function creates a proxy file corresponding to said program function;

said authorization selector tool, in response to said input from said administrator, calls said security mechanism to set an operating system user authorization for access to said proxy file; and

said authorization query function generates said response in response to said operating system user authorization for access to said proxy file.

15. The method recited in claim **13**, wherein said application program pre-run-time portion comprises an installation program for installing said application program in said computer system.

* * * * *