AMD ALVEO™ UL3422 FPGA ACCELERATOR CARD

FOR ULTRA-LOW LATENCY TRADING IN A SLIM FORM FACTOR FOR BROAD MARKET DEPLOYMENT

AMD
together we advance_

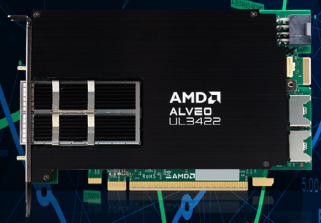

OVERVIEW

Today's leading proprietary trading firms, market makers, hedge funds, brokerages, and exchanges are continually seeking new ways to enhance tick-to-trade performance for a competitive edge.

The AMD Alveo™ UL3422 FPGA accelerator card combines ultra-low latency networking with adaptable hardware, accelerating trading strategies at nanosecond speeds. Powered by the AMD Virtex™ UltraScale+™ VU2P FPGA, the Alveo UL3422 card features a latency-optimized transceiver technology for the world's fastest trade execution and tick-to-trade latency of network I/O.[1]

Its slim, FHHL form factor provides the flexibility to deploy across a breadth of server configurations, and as an FPGA-based trading card, supports traditional hardware design tools, development frameworks, and ecosystem IP.

KEY APPLICATIONS

TARGET USERS

- Proprietary Traders
- Market Makers
- Hedge Funds
- Brokerages
- Exchanges
- Market Data Feed Vendors

USE CASES

- Ultra-Low Latency Trading
- Pre-Trade Risk Analysis
- Market Data Delivery & Distribution

HIGHLIGHTS

PURPOSE-BUILT FOR ULTRA-LOW LATENCY (ULL) PERFORMANCE

- Custom FPGA device and new transceiver architecture for fast trade execution
- Less than 3 ns transceiver latency & up to 7X performance vs. previous generation[2]

SLIM FORM FACTOR FOR COST-EFFECTIVE DEPLOYMENT

- FHHL form factor to fit in a breadth of server configurations
- Optimized for rack-space, compute density, and power efficiency

EASE OF DEVELOPMENT FOR FAST PATH TO TRADE

- Traditional FPGA flows through AMD Vivado™ tool with reference designs
- Open-source PyTorch development flow for AI-enabled trading algorithms
- IP and trading development frameworks from ecosystem partners

Less than 3 ns transceiver latency[2]

HFT Solutions, LLC, Ex. 2018
Citadel Securities LLC v. HFT Solutions, LLC, IPR2026-00212
Page 1 of 4

PURPOSE-BUILT FOR ULTRA-LOW LATENCY PERFORMANCE

The AMD Alveo UL3422 accelerator card features a purpose-built Virtex™ UltraScale+ FPGA device with a new transceiver architecture. The FPGA fabric is capable of 644 MHz clock speeds at 16-bit operation for streaming market data. The device also integrates hardened Ethernet MAC and PCS IP for ultra-low latency data transmission and control management, simplifying timing closure for ULL trading. With two network ports supporting 10 Gb/s and 25 Gb/s data rates, the FPGA and transceiver architecture meets the operational standards of most market exchanges.

ALVEO™ UL3422 ACCELERATOR CARD

Powered by Purpose-Built FPGA with Ultra-Low Latency Transceiver Architecture

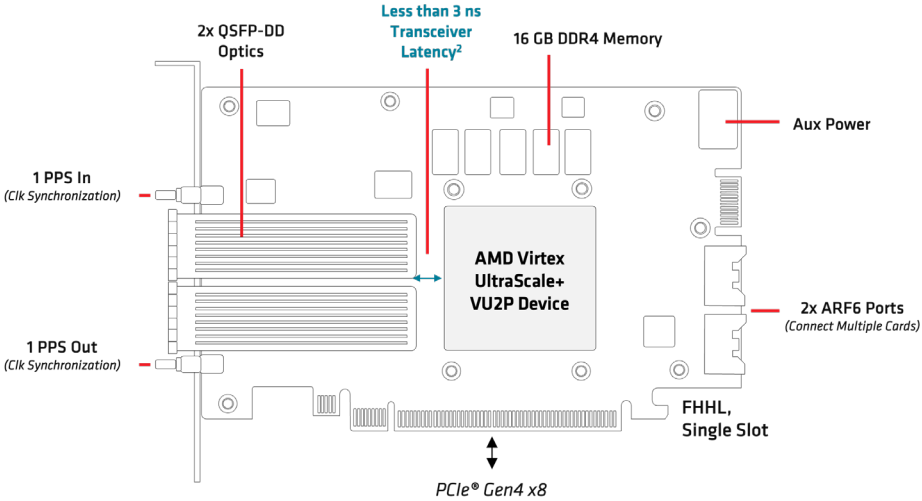

HFT Solutions, LLC, Ex. 2018
Citadel Securities LLC v. HFT Solutions, LLC, IPR2026-00212
Page 2 of 4

SLIM FORM FACTOR FOR COST-EFFECTIVE DEPLOYMENT

With a small, efficient design, the Alveo™ UL3422 FinTech accelerator streamlines the number of network ports, onboard memory, and board-to-board connectivity options compared to its predecessor—the Alveo UL3524 accelerator card—for cost-effective server deployment. Its compactness enables optimized rack space, compute density, and power consumption to limit infrastructure and co-location expenses.

The Alveo UL3422 accelerator has been inter-op tested for deployment in the 1U Orion HF X410R-G6 high-frequency trading server from Hypertec, as well as the 1U Dell PowerEdge-R640 server, both available for immediate deployment.

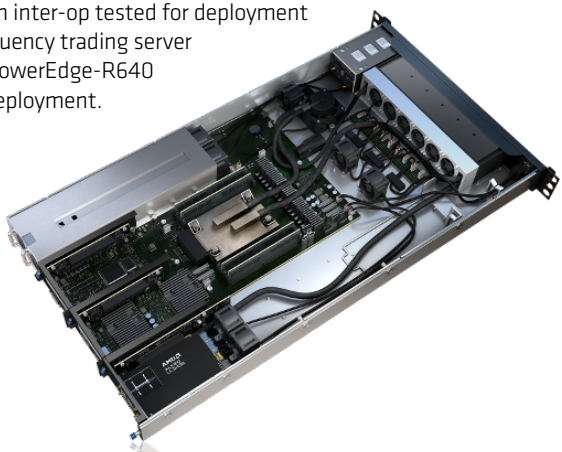

EASE OF DEVELOPMENT FOR FAST PATH TO TRADE

The Alveo UL3422 FinTech accelerator supports traditional FPGA development workflows for a fast path to profitable trading. The card is supported by the AMD Vivado™ Design Suite for RTL development, coupled with reference designs for rapid evaluation of latency performance. The nxFramwork from Exegy delivers a hardware and software environment with pre-built infrastructure IP for seamless integration of user algorithms into complete trading engines, order execution systems, pre-trade risk check gateways, or custom applications.

With the increasing adoption of AI in algorithmic trading, AMD Research Labs provides the open-source FINN development framework. Using quantization techniques, FINN enables developers to reduce the size of their AI models, compile to hardware, and integrate into a trading algorithm's datapath for low-latency performance. For pre-built AI solutions, Xelera Technologies offers Xelera Silva low-latency machine learning IP—complete with software stack, API support, and example design.

AMD Vivado

exegy

XELERA SILVA

HFT Solutions, LLC, Ex. 2018
Citadel Securities LLC v. HFT Solutions, LLC, IPR2026-00212
Page 3 of 4

SPECIFICATIONS

AMD ALVEO UL3422

CARD FEATURES AND SPECIFICATIONS	
FPGA RESOURCES	• 787K look-up tables (LUTs) | 1,722K registers • 1,680 DSP slices • 256 Mb embedded memory (76 Mb block RAM, 180 Mb UltraRAM)
TRANSCEIVERS	• 8 GTYP transceivers (32.75 Gb/s) | 32 GTF ultra-low latency transceivers (25.78 Gb/s)
ONBOARD MEMORY	• 16 GB DDR4, 64b +8b ECC at 2400 MT/s
INTERFACES	• 2x QSFP-DD (16x10/25G ports)
EXPANSION PORTS	• Two ARF6 supports additional 16x10/25G ports to connect multiple cards • One Pico-Clasp connector for sideband
CLOCK SYNCHRONIZATION	• 1 PPS In, 1PPS Out
CONFIGURATION AND DEBUG	• 2 Gb QSPI, JTAG over Micro USB
PCIE® INTERFACE	• PCIe Gen4 x8 (x16 physical connector)
FORM FACTOR	• Full-height, half-length (FHHL) | Single slot
POWER AND THERMAL	• 180W electrical | 120W TDP | Passive cooling
PRODUCT SKU	• A-UL3422-P16G-PQ-G

TAKE THE NEXT STEP

- For pricing and availability, contact your local sales representative or complete the Alveo™ UL3422 Inquiry Form.
- To request software licensing and technical documentation, visit the Alveo UL3422 Secure-Site Request Form.

ENDNOTES

1. The 2024 AMD world record for latency is based on 3rd party testing commissioned by AMD and Exegy, by Strategic Technology Analysis Center, LLC (STAC®) in April 2024, using the STAC-T0 benchmark to test the AMD Alveo UL3524 accelerator card powered by the AMD Virtex Ultrascale+ VU2P FPGA, running on the Exegy nxFramework and Exegy nxTCP-UDP-10g-ULL IP Core, in a Dell PowerEdge R7525 server with AMD EPYC 7313 processors. See https://stacresearch.com/news/AMD240422 for the full STAC report. AMD holds the previous world record for latency (2020): https://www.stacresearch.com/news/XLX200514. Stated results for the Alveo UL3524 accelerator have been extrapolated to the AMD Alveo UL3422 card, based on identical silicon and product features. (ALV-20).

2. Based on a simulated comparison by AMD using the Synopsis VCS 2019.06-SP2 ultra-low latency Virtex UltraScale+ VU2P GTF transceivers and GTY transceivers in February 2022 (ALV-15).

DISCLAIMERS

The information contained herein is for informational purposes only and is subject to change without notice. While every precaution has been taken in the preparation of this document, it may contain technical inaccuracies, omissions and typographical errors, and AMD is under no obligation to update or otherwise correct this information. Advanced Micro Devices, Inc. makes no representations or warranties with respect to the accuracy or completeness of the contents of this document, and assumes no liability of any kind, including the implied warranties of noninfringement, merchantability or fitness for purposes, with respect to the operation or use of AMD hardware, software or other products described herein. No license, including implied or arising by estoppel, to any intellectual property rights is granted by this document. Terms and limitations applicable to the purchase or use of AMD's products are as set forth in a signed agreement between the parties or in AMD's Standard Terms and Conditions of Sale.

COPYRIGHT NOTICE

© Copyright 2024 Advanced Micro Devices, Inc. All rights reserved. AMD, the AMD Arrow logo, Alveo, Vivado, Virtex, and other designated brands included herein are trademarks of Advanced Micro Devices, Inc. PCIe, and PCI Express are trademarks of PCI-SIG and used under license. PyTorch, the PyTorch logo and any related marks are trademarks of The Linux Foundation. Other product names used in this publication are for identification purposes only and may be trademarks of their respective owners. PID2949402

HFT Solutions, LLC, Ex. 2018
Citadel Securities LLC v. HFT Solutions, LLC, IPR2026-00212
Page 4 of 4