DCT5100
Digital Consumer Terminal

Installation Manual

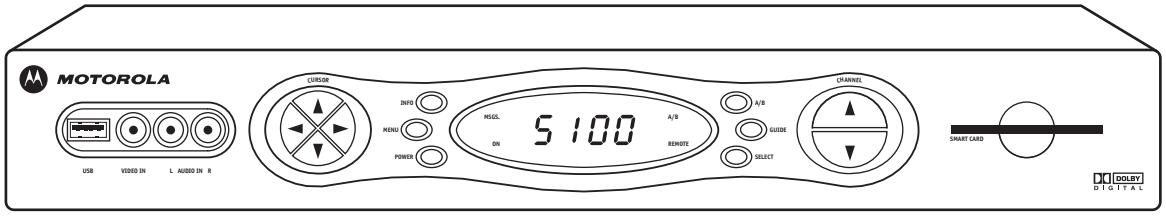

MOTOROLA
intelligence everywhere™

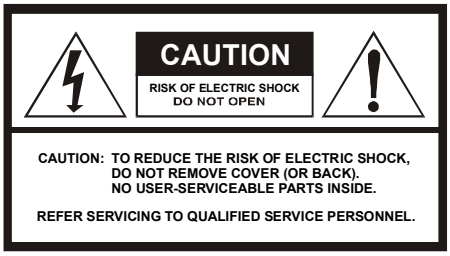

Caution

These servicing instructions are for use by qualified personnel only. To reduce the risk of electrical shock, do not perform any servicing other than that contained in the Installation and Troubleshooting Instructions unless you are qualified to do so. Refer all servicing to qualified service personnel.

Special Symbols That Might Appear on the Equipment

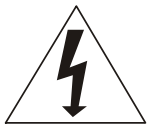

This symbol indicates that dangerous voltage levels are present within the equipment. These voltages are not insulated and may be of sufficient strength to cause serious bodily injury when touched. The symbol may also appear on schematics.

The exclamation point, within an equilateral triangle, is intended to alert the user to the presence of important installation, servicing, and operating instructions in the documents accompanying the equipment.

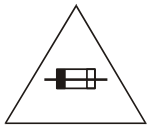

For continued protection against fire, replace all fuses only with fuses having the same electrical ratings marked at the location of the fuse.

This equipment operates over the marked Voltage and Frequency range without requiring manual setting of any selector switches. Different types of line cord sets may be used for connections to the mains supply circuit and should comply with the electrical code requirements of the country of use. The line cord provided with the equipment is acceptable for use with NEMA Style 5-15R ac receptacles supplying nominal 120 Volts.

WARNING: TO PREVENT FIRE OR SHOCK HAZARD, DO NOT EXPOSE THIS APPLIANCE TO RAIN OR MOISTURE. THE APPARATUS SHALL NOT BE EXPOSED TO DRIPPING OR SPLASHING AND NO OBJECTS FILLED WITH LIQUIDS, SUCH AS VASES, SHALL BE PLACED ON THE APPARATUS.

CAUTION: TO PREVENT ELECTRICAL SHOCK, DO NOT USE THIS (POLARIZED) PLUG WITH AN EXTENSION CORD, RECEPTACLE, OR OTHER OUTLET UNLESS THE BLADES CAN BE FULLY INSERTED TO PREVENT BLADE EXPOSURE.

CAUTION: TO ENSURE REGULATORY AND SAFETY COMPLIANCE, USE ONLY THE PROVIDED POWER CABLES.

It is recommended that the customer install an AC surge arrestor in the AC outlet to which this device is connected. This is to avoid damaging the equipment by local lightning strikes and other electrical surges.

FCC Compliance

This equipment has been tested and found to comply with the limits for a Class B digital device, pursuant to Part 15 of the FCC Rules. These limits are designed to provide reasonable protection against harmful interference when the equipment is operated in a residential environment. This equipment generates, uses, and can radiate radio frequency energy and, if not installed and used in accordance with the instructions, may cause harmful interference to radio communications. Operation of this equipment in a residential area is likely to cause harmful interference in which case the user will be required to correct the interference at his/her own expense. Any changes or modifications not expressly approved by Motorola could void the user's authority to operate this equipment under the rules and regulations of the FCC. However, there is no guarantee that interference will not occur in a particular installation. If this equipment does cause harmful interference to radio or television reception, which can be determined by turning the equipment off and on, the user is encouraged to try to correct the interference by one of the following measures:

- Re-orient or relocate the receiving antenna
- Increase the separation between the equipment and receiver
- Connect the equipment into an outlet on a circuit different from that to which the receiver is connected.
- Consult the dealer or an experienced radio/TV technician for help.

You may find the following booklet, prepared by the Federal Communication Commission, helpful: *How to Identify and Resolve Radio-TV Interference Problems*, Stock No. 004-000-0342-4, U.S. Government Printing Office, Washington, DC 20402.

Changes or modification not expressly approved by the party responsible for compliance could void the user's authority to operate the equipment.

Canadian Compliance

This Class B digital apparatus meets all requirements of the Canadian Interference-Causing Equipment Regulations.
Cet appareil numérique de la classe B respects toutes les exigences du Règlement sur le matériel brouilleur du Canada.

FCC Declaration of Conformity

According to 47 CFR, Parts 2 and 15 for Class B Personal Computers and Peripherals; and/or CPU Boards and Power Supplies used with Class B Personal Computers, Motorola, Inc., 6450 Sequence Drive, San Diego, CA 92121, 1-800-225-9446 or 101 Tournament Drive, Horsham, PA 19044, 1-888-944-4357, declares under sole responsibility that the product identifies with 47 CFR Part 2 and 15 of the FCC Rules as a Class B digital device. Each product marketed is identical to the representative unit tested and founded to be compliant with the standards. Records maintained continue to reflect the equipment being produced can be expected to be within the variation accepted, due to quantity production and testing on a statistical basis as required by 47 CFR 2.909. Operation is subject to the following condition: This device must accept any interference received, including interference that may cause undesired operation. The above named party is responsible for ensuring that the equipment complies with the standards of 47 CFR, Paragraphs 15.107 to 15.109

FCC Part 68 Statement

This equipment complies with part 68 of the FCC rules. On the rear panel of this equipment is a label that contains, among other information, the FCC registration number and ringer equivalence number (REN) for the equipment. If requested, this information must be provided to the telephone company.

The REN is used to determine the quantity of devices that may be connected to the telephone line. Excessive RENs on the telephone line may result in the devices not ringing in response to an incoming call. In most, but not all areas, the sum of the RENs should not exceed five (5.0). To be certain of the number of devices that may be connected to the line, as determined by the total RENs, contact the telephone company to determine the maximum REN for the calling area.

This equipment uses the following USOC jack: RJC. An FCC-compliant telephone cord and modular plug is provided with this equipment. This equipment is designed to be connected to the telephone network or premises wiring using a compatible modular jack that is Part 68 compliant. This equipment cannot be used on telephone company-provided coin services. Connection to Party Line Service is subject to state tariffs.

If this equipment causes harm to the telephone network, the telephone company will notify you in advance that the temporary discontinuance of services may be required. If advance notice isn't practical, the telephone company will notify the customer as soon as possible. Also, you will be advised of your right to file a complaint with the FCC if you believe it is necessary.

The telephone company may make changes in its facilities, equipment, operations, or procedures that could affect the operation of the equipment. If this happens, the telephone company will provide advance notice in order to maintain uninterrupted service.

If the trouble is causing harm to the telephone system, the telephone company may request that you remove the equipment from the network until the problem is resolved.

Industry Canada CS-03 Statement

The Industry Canada label identifies certified equipment. This certification means that the equipment meets certain telecommunications network protective, operational and safety requirements as prescribed in the appropriate Terminal Equipment Technical Requirements document(s). The department does not guarantee that the equipment will operate to the user's satisfaction.

Before installing this equipment, users should ensure that it is permissible to be connected to the facilities of the local telecommunications company. The equipment must also be installed using an acceptable method of connection. The customer should be aware that compliance with the above conditions might not prevent degradation of service in some situations. Only a representative designated by the supplier should coordinate repairs to certified equipment. Repairs or alterations made by the user to this equipment, or equipment malfunctions may give the telecommunication company cause to request the user to disconnect the equipment.

Users should ensure for their own protection that the electrical ground connections of the power utility, telephone lines and internal metallic water pipe system, if present, are connected together. This precaution may be particularly important in rural areas. Users should not attempt to make such connections themselves, but should contact the appropriate electric inspection authority, or electrician, as appropriate.

The Ringer Equivalence Number (REN) of this device is displayed on the product. The REN assigned to each terminal device provides an indication of the maximum number of terminals allowed to be connected to a telephone interface. The termination on an interface may consist of any combination of devices subject only to the requirement that the sum of the Ringer Equivalence Numbers of all devices does not exceed 5. The telephone connection arrangement is a CA11A.

Repairs: If repair is necessary, call the Motorola Repair Facility at 1-800-227-0450 for a Return for Service Authorization (RSA) number before sending the unit. The RSA number must be prominently displayed on all equipment cartons. Pack the unit securely, enclose a note describing the exact problem, and a copy of the invoice that verifies the warranty status. Ship the unit PRE-PAID to the following address:

Motorola, Inc.
Attn: RSA #_____
5964 E. 14th Street
Brownsville, TX 78521

NOTE TO CATV SYSTEM INSTALLER: This reminder is provided to call CATV system installer's attention to Article 820-40 of the NEC that provides guidelines for proper grounding and, in particular, specifies that the cable ground shall be connected to the grounding system of the building, as close as possible to the point of cable entry as practical.

Copyright © 2002 by Motorola, Inc.

All rights reserved. No part of this publication may be reproduced in any form or by any means or used to make any derivative work (such as translation, transformation or adaptation) without written permission from Motorola, Inc.

Motorola reserves the right to revise this publication and to make changes in content from time to time without obligation on the part of Motorola to provide notification of such revision or change. Motorola provides this guide without warranty of any kind, either implied or expressed, including, but not limited to, the implied warranties of merchantability and fitness for a particular purpose. Motorola may make improvements or changes in the product(s) described in this manual at any time.

MOTOROLA and the Stylized M Logo are registered in the US Patent & Trademark Office. Dolby Digital is manufactured under license from Dolby Laboratories. "Dolby" and the double-D symbol are trademarks of Dolby Laboratories. Copyright © 2002 Dolby Laboratories. All other product or service names are the property of their respective owners. All rights reserved. © Motorola, Inc. 2002

Contents

Section 1
Introduction

Standard Features 1-2
Optional Features 1-3
Using This Manual 1-4
Related Documentation 1-4
Document Conventions 1-4
If You Need Help 1-5
Calling for Repairs 1-5

Section 2
Overview

Triple Tuner™ 2-1
Front Panel 2-1
Rear Panel 2-3
RF Bypass Switch Option 2-4
Remote Controls 2-5
- DRC 400 Remote Control 2-5
- Installing Batteries in the Remote Control 2-7

Section 3
Installation

Installing the DCT5100 3-1
Standard Cabling Diagram 3-2
RF Bypass Switch Cabling Diagrams 3-3
Audio/Video Cabling Diagrams 3-4
Audio-Only Receiver 3-8
IR Blaster Transmitter 3-10
- Locating the IR Receiver on the VCR 3-10
- Installing the IR Blaster 3-11
- Checking the IR Blaster 3-11

Data Devices 3-12
- Rear Panel Connections 3-12
  - Ethernet RJ-45 Network Interface 3-12
  - HPNA RJ-11 Interface (optional) 3-12
  - USB 3-13

IEEE 1394 (optional) 3-13
Front Panel Connections **3-13**
Smart Card Interface 3-13
Additional USB Port 3-13
Boot Cycle **3-14**
Boot Cycle Error Codes **3-15**
Operational Check **3-17**

Section 4
Diagnostics

Accessing Diagnostics **4-1**
d01 General Status **4-3**
Error Codes **4-4**
Connected State **4-4**
PLATFORM ID **4-4**
FAMILY ID **4-4**
MODEL ID **4-4**
REMOD CHANNEL **4-5**
SETTOP TIME **4-5**
d02 Purchase Status **4-5**
Unsent Purchases **4-6**
Unacknowledged Reports **4-6**
Last Acknowledged Purchase **4-6**
Last Purchase Reportback **4-6**
IPPV Status **4-6**
d03 Out-Of-Band (OOB) Diagnostic **4-7**
OOB FREQUENCY **4-8**
OOB CARRIER LOCK **4-8**
OOB DATA **4-9**
OOB EMM DATA **4-9**
OOB Signal-to-Noise Ratio (SNR) **4-9**
OOB Automatic Gain Control (AGC) **4-10**
NETWORK PID **4-10**
EMM PID **4-10**
EMM PROVIDER ID **4-10**
d04 In-Band (IB) Diagnostic **4-11**
MODE **4-12**
CARRIER LOCK **4-12**
DATA **4-12**
Signal-to-Noise Ratio (SNR) **4-13**
Automatic Gain Control (AGC) **4-13**
5 SECOND ERROR COUNTS **4-13**
d05 Unit Address **4-14**
TVPC INSTALLED **4-14**

Samsung
Ex. 1026 - Page 6

UNIT ADDRESS 4-15
NETWORK ADDRESS 4-15
OOB MULTICAST 16 ADDRESS 4-16
MULTICAST 16 ADDRESS 4-16
MAC ADDRESS 4-16
d06 Current Channel Status 4-17
TYPE 4-18
AUTHORIZATION Reason Code 4-19
PICTURE CARRIER or In-Band Frequency 4-19
AUTHORIZED 4-19
PURCHASABLE 4-20
PREVIEW 4-20
MPEG VIDEO LOCK 4-20
MPEG AUDIO LOCK 4-21
PCR LOCK 4-21
d07 RF MODEM (Upstream) 4-22
RF Modem STATUS 4-23
CENTER FREQUENCY 4-23
REQUESTED POWER LEVEL 4-23
ACTUAL POWER LEVEL 4-23
REPORTBACK ADDRESS 4-23
LAST RB ATTEMPT TIME 4-23
d08 Code Modules 4-24
BOOTLOADER 4-26
DIGITAL SECURE PROCESSOR 4-26
ANALOG SECURE PROCESSOR 4-26
Downloadable Object Information Table 4-26
OBJECT NAME / VERSION 4-26
STATUS 4-26
SEGS / TIME 4-27
d09 MEMORY CONFIGURATION 4-27
MEMORY CONFIGURATION 4-27
d10 Keypad - LED 4-28
Front-Panel Keypad Diagnostic 4-28
d11 INTERFACE STATUS 4-29
INTERFACE STATUS 4-29
d12 USER SETTING STATUS 4-30
OUTPUT TYPE 4-30
CLOSED CAPTION 4-31
PEN SIZE 4-31
FONT STYLE 4-31
FOREGROUND COLOR 4-31
FOREGROUND OPACITY 4-32
BACKGROUND COLOR 4-32

Ex. 1026 - Page 7

BACKGROUND OPACITY 4-32
SERVICE SELECTION 4-33
SETTINGS 4-33
ASPECT RATIO Mode 4-33
d13 INTERACTIVE INFO 4-34
IP ADDRESS 4-34
UPM 4-35
UPSTREAM ID 4-35
DOWNSTREAM ID 4-35
STATE 4-35
MAC ABORT COUNTER 4-36
SOCKET PORT STATE 4-36

Section 5
Troubleshooting

Appendix A
Specifications and Features

Specifications A-1
Features List A-2

Abbreviations and Acronyms

Samsung
Ex. 1026 - Page 8

Figures

Figure 1-1 DCT5100 set-top terminal 1-2
Figure 2-1 Front panel 2-1
Figure 2-2 DCT5100 rear panel 2-3
Figure 2-3 RF Bypass switch option 2-4
Figure 2-4 DRC 400 remote control 2-5
Figure 3-1 Standard VCR cabling 3-2
Figure 3-2 RF Bypass switch 3-3
Figure 3-3 Audio system cabling 3-5
Figure 3-4 Video System Cabling 3-6
Figure 3-5 HDTV Cabling 3-7
Figure 3-6 Audio-only receiver 3-8
Figure 3-7 Audio with stereo last 3-9
Figure 3-8 IR transmitter installed in mounting bracket 3-10
Figure 3-9 IR Blaster installed 3-11
Figure 3-10 Data Devices – Rear Panel 3-12
Figure 4-1 Main menu diagnostic - LED 4-2
Figure 4-2 General status - LED 4-3
Figure 4-3 PURCHASE STATUS - LED 4-5
Figure 4-4 OOB status - LED 4-8
Figure 4-5 IN-BAND DIAGNOSTIC - LED 4-11
Figure 4-6 UNIT ADDRESS - LED 4-15
Figure 4-7 CURRENT CHANNEL STATUS - LED 4-18
Figure 4-8 RF upstream modem - LED 4-22
Figure 4-9 CODE MODULES - LED 4-25
Figure 4-10 Character format display - OSD 4-28
Figure 4-11 Sample INTERACTIVE INFO LED 4-34

Tables

Table 2-1 Front panel 2-2
Table 2-2 Rear panel 2-3
Table 2-3 Remote control keys 2-5
Table 3-1 LED displays OOB frequencies 3-14
Table 3-2 Error codes at boot cycle startup 3-15
Table 3-3 Operational check 3-17
Table 4-1 Main menu - OSD 4-2
Table 4-2 GENERAL STATUS - OSD 4-3
Table 4-3 Fatal hardware initialization errors - LED 4-4
Table 4-4 PURCHASE STATUS - OSD 4-5
Table 4-5 IPPV status indicators – OSD and LED 4-6
Table 4-6 OOB status - OSD 4-7
Table 4-7 CARRIER LOCK indicators – OSD and LED 4-8
Table 4-8 DATA indicators – OSD and LED 4-9
Table 4-9 EMM DATA indicators – OSD and LED 4-9
Table 4-10 SNR indicators - OSD 4-9
Table 4-11 AGC indicators 4-10
Table 4-12 IN-BAND DIAGNOSTIC - OSD 4-11
Table 4-13 MODE values - OSD 4-12
Table 4-14 In-Band CARRIER LOCK - OSD and LED 4-12
Table 4-15 In-Band DATA indicators – OSD and LED 4-12
Table 4-16 In-Band SNR - OSD 4-13
Table 4-17 In-Band AGC values - OSD 4-13
Table 4-18 UNIT ADDRESS - OSD 4-14
Table 4-19 MULTICAST 16 ADDRESS streams - OSD 4-16
Table 4-20 Analog CURRENT CHANNEL STATUS - OSD 4-17
Table 4-21 Digital CURRENT CHANNEL STATUS - OSD 4-17
Table 4-22 Current channel TYPE – OSD and LED 4-18
Table 4-23 Variable descriptions - OSD 4-19
Table 4-24 AUTHORIZED values 4-19
Table 4-25 Purchase indicators – OSD and LED 4-20
Table 4-26 PREVIEW mode indicators – OSD and LED 4-20
Table 4-27 MPEG VIDEO LOCK 4-20
Table 4-28 MPEG AUDIO LOCK values 4-21
Table 4-29 PCR LOCK values 4-21
Table 4-30 RF upstream modem 4-22
Table 4-31 CODE MODULES - OSD 4-24

Samsung
Ex. 1026 - Page 10

Table 4-32 Object STATUS 4-26
Table 4-33 MEMORY CONFIGURATION - OSD 4-27
Table 4-34 INTERFACE STATUS 4-29
Table 4-35 USER SETTING STATUS – OSD 4-30
Table 4-36 INTERACTIVE INFO - OSD 4-34

Section 1

Introduction

The Motorola DCT5100 advanced digital set-top terminal provides a new level of broadband networking services as well as traditional services such as analog and digital video. The DCT5100 also has many other features:

- Initiates, authorizes and facilitates the purchase of on-demand services
- Enables High Definition TV Video output in multiple modes
- Enables fast access to the Internet and World Wide Web
- Enables e-mail services
- Enables secure electronic commerce transactions
- Downloads and executes service applications

The DCT5100 is a feature rich hardware platform that is one part of Motorola's end-to-end system solutions. It requires the appropriate operating system software applications, transmission equipment, and control equipment to function properly and seamlessly.

By providing a platform for many of today's advanced third-party program guides and on-screen navigators, the DCT5100 offers consumers an entirely new and exciting means of interacting with their television. The advanced digital set-top will support functionality for future services, including IP telephony and interactive games.

Figure 1-1 illustrates front and rear views of the DCT5100:

Figure 1-1
DCT5100 set-top terminal

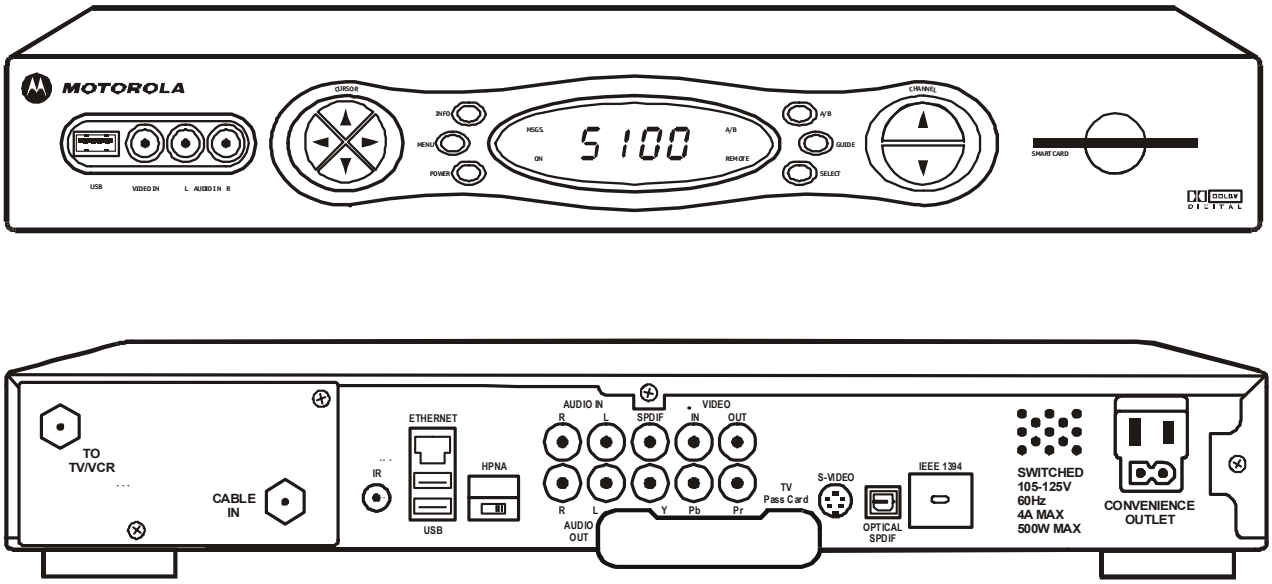

Standard Features

The Motorola DCT5100 offers the following standard features:

- Two tuners up to 860 MHz
- ITU standard 64/256 QAM/FEC/enhanced adaptive equalizer
- Clear analog channel processor with BTSC decoder
- MPEG-2 main profile ® high level video processor
- ATSC standard Dolby® AC-3® audio processor
- Triple-Tuner™ architecture supports simultaneous internet protocol (IP) connection while processing video
- DOCSIS compliant integrated cable modem
- DES based encryption/DCII access control
- Out-of-band data receiver (70-130 MHz) 2.048 Mbps
- 80.3 M Byte total memory (field/factory upgradable)
- A-V input ports
- Component Output (Y –Pb –Pr)
- S-Video output
- S/PDIF-Dolby AC-3 output (electrical)

Samsung
Ex. 1026 - Page 13

- S/PDIF-Dolby AC-3 output (optical) – Dolby Digital audio interface
- Universal Serial Bus (USB) port (dual connector interface) – 2 rear, 1 front
- 10/100 Base-T Ethernet Port (RJ-45)
- RF and baseband (video and L/R audio) output ports
- On-board real-time RF return (DOCSIS compliant)
- Renewable security connector
- Smart card interface connector (E-Commerce)
- Infra-Red (IR) blaster port
- Switched accessory outlet
- Messaging capabilities
- Digital diagnostics
- 32-bit graphics
- Analog/digital video scaling (picture in graphics)
- 2-D/3-D graphics support in hardware
- Macrovision copy protection
- 4 digit, 7 segment LED display
- Full feature access from front panel

Optional Features

- RF Bypass switch
- Expansion DRAM
- Expansion FLASH
- 1394 "Firewire" digital interface (dual connector interface)
- IR Blaster transmitter
- HPNA 2.0 (RJ-11) Interface

Ex. 1026 - Page 14

Using This Manual

This manual provides instructions to install and configure a DCT5100:

Section 1	**Introduction** provides a product description, a list of related documentation, the technical helpline telephone number, and the repair/return procedure.
Section 2	**Overview** describes the DCT5100 terminal and provides an overview of its use. This section also identifies the front-panel displays and switches and describes the rear-panel features.
Section 3	**Installation** provides instructions on how to install the DCT5100 in a subscriber location and perform operational tests.
Section 4	**Diagnostics** provides instructions on accessing and interpreting the built-in diagnostics.
Section 5	**Troubleshooting** provides information on common error conditions and their resolution.
Appendix A	**Specifications** provides the technical specifications for and **Features** lists the features of the DCT5100.
Abbreviations and Acronyms	The **Abbreviations and Acronyms** list contains the full spelling of the short forms used in this manual.

Related Documentation

Separate instruction manuals are available for associated components:

- *DCT5100 User Guide*
- *DRC 400 Remote Control User Guide*

Document Conventions

Before you begin working with this manual, familiarize yourself with the stylistic conventions used in this manual:

SMALL CAPS	Denotes silk screening on the equipment, typically representing front- and rear-panel controls, input/output (I/O) connections, and LEDs
*** (asterisk)**	Indicates that several versions of the same model number exist and the information applies to all models; when the information applies to a specific model, the complete model number is given
Italic type	Used for emphasis
`Courier font`	Displayed text

Samsung
Ex. 1026 - Page 15

If You Need Help

If you need assistance while working with the DCT5100, contact the Motorola Technical Response Center (TRC):

- Inside the U.S.A.: **1-888-944-HELP** (**1-888-944-4357**)
- Outside the U.S.A.: **1-215-323-0044**
- Online: http://www.motorola.com/broadband, click **HTML/Modem Version**, click **Customer Support**, then click **Web Support**.

The TRC is open from 8 AM to 7 PM Eastern Time, Monday through Friday and 10 AM to 6 PM Eastern Time, Saturday. When the TRC is closed, emergency service *only* is available on a call-back basis. Web Support offers a searchable solutions database, technical documentation, and low priority issue creation/tracking 24 hours per day, 7 days per week.

Calling for Repairs

If repair is necessary, call the Motorola Repair Facility at **1-800-227-0450** for a Return for Service Authorization (RSA) number before sending the unit. The RSA number must be prominently displayed on all equipment cartons. The Repair Facility is open from 8:00 AM to 5:00 PM Central Time, Monday through Friday.

When calling from outside the United States, use the appropriate international access code and then call **956-541-0600** to contact the Repair Facility.

When shipping equipment for repair, follow these steps:

1. Pack the unit securely.
2. Enclose a note describing the exact problem
3. Enclose a copy of the invoice that verifies the warranty status.
4. Ship the unit **PREPAID** to the following address:

   Motorola, Inc.
   Attn: RSA #_____
   5964 E. 14th Street
   Brownsville, TX 78521

Section 2

Overview

The DCT5100 is adaptable to various software platforms. It supports existing entertainment, analog, on-demand, and digital broadcast interactive services. The DCT5100 provides high definition video output.

The DCT5100 includes two 6 MHz tuners with analog AMS-VSB, digital MPEG-2, and digital DOCSIS data-receive capability for services such as Web enhanced TV. It also supports a variety of consumer electronic interfaces including S-Video, SPDIF (AC-3 Electrical and Optical), Ethernet, USB, HPNA for home networking applications, and IEEE 1394 (Firewire-optional) for interfacing to other consumer electronic devices.

Triple Tuner™

The DCT5100 has a unique Triple Tuner™ architecture. One tuner is dedicated to video services, another to the DOCSIS channel for high-speed data services, and the third tuner is used for the out-of-band control channel. Users have the capability of simultaneously performing high-speed Internet access and IP Telephony functionality while continuing to watch traditional video services. The DOCSIS tuner can also be shared by an external device through an Ethernet connection on the back panel without interrupting TV viewing.

Front Panel

The controls on the front panel provide functional navigation of the DCT5100 if the remote control is lost or is temporarily out of service. Certain functions, such as those requiring a numeric entry, are not available without a remote control. Figure 2-1 illustrates the front panel, which contains selection and tuning buttons, various displays, the power switch, and connectors for USB, audio and video:

Figure 2-1
Front panel

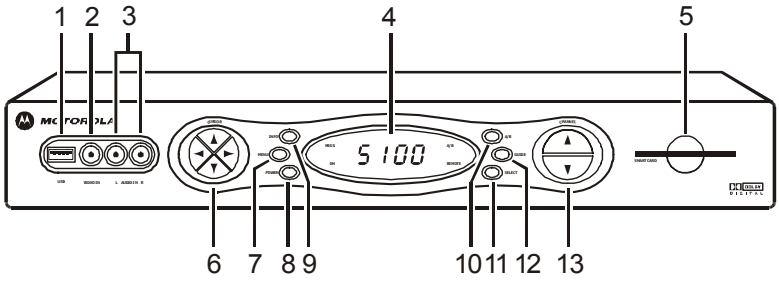

Table 2-1 describes the front-panel controls and LEDs:

Table 2-1
Front panel

Key	Feature	Function
1	USB	The Universal Serial Bus (USB) connector is used to support devices such as keyboards, joysticks, scanners, disk storage, PCs, printers, and digital cameras.
2	VIDEO IN	The VIDEO IN connector accepts baseband video from a VCR, camcorder, or other video device.
3	L AUDIO IN R	This audio input connector pair accepts audio from a VCR, camcorder, or other audio device.
4	MSGS. ON 5100 A/B REMOTE	Displays the channel number or time of day. There are four indicator lights on the LED screen: MSGS. — the DCT5100 has received messages for you to read ON — the DCT5100 is powered on A/B — the RF bypass is active REMOTE — the remote control is in use
5	SMART CARD	This interface is intended to support electronic commerce activity utilizing a smart card. Contact your service provider for availability.
6	CURSOR	Moves the cursor around the program guide and menu screens.
7	MENU	Displays the main menu.
8	POWER	Turns the device on or off.
9	INFO	Displays the current channel and program information (not supported by all applications).
10	A/B	Use to manually enable the RF bypass function. You must have a cable-ready TV for this function to operate.
11	SELECT	Selects menu options, pay-per-view events or programs from the program guide.
12	GUIDE	Displays the program guide.
13	CHANNEL	Changes the channels by moving up or down.

Samsung
Ex. 1026 - Page 18

Rear Panel

Figure 2-2 illustrates the rear panel of the DCT5100, which contains a switched power outlet; connectors for video, audio, and RF cabling; data output; and modem and data interface connectors.

Figure 2-2
DCT5100 rear panel

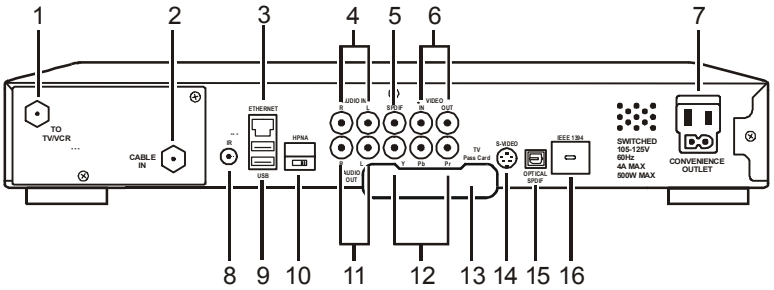

Table 2-2 describes the rear-panel connections:

Table 2-2
Rear panel

Key	Item	Function
1	TO TV/VCR	F-type connector used to connect the DCT5100 to a standard TV or VCR operating on channel 3 or 4.
2	CABLE IN	F-type connector used for the coaxial cable input from service provider (input to integrated RF return).
3	ETHERNET	Ethernet 10Base-T port supports PC networking.
4	AUDIO IN R L	RCA jacks for loop-through audio from audio equipment.
5	SPDIF	The SPDIF connector is a digital output connection that carries Dolby Digital 5.1 audio or PCM audio.
6	VIDEO IN OUT	VIDEO IN – RCA jack connects the DCT5100 to a composite (baseband) video input from a TV, VCR, camcorder, or other video device. VIDEO OUT – RCA jack that delivers video to an external device such as a VCR or TV.
7	CONVENIENCE OUTLET	AC power outlet that can be configured as a switched or unswitched outlet; and a two-pronged plug for attaching a power cord.
8	IR	Miniphono jack enabling the DCT5100 to control a VCR using an optional low power IR Blaster transmitter (not all electronic program guides support this feature).

Ex. 1026 - Page 19

Key	Item	Function
9	USB	The Universal Serial Bus (USB) supports such devices as keyboards, joysticks, scanners, disk storage, PCs, printers, and digital cameras.
10	HPNA	HPNA connector enables you to connect your DCT5100 to computers within your home using existing telephone lines. (Optional.)
11	R L AUDIO OUT	Left and right audio RCA jacks used for stereo audio output.
12	Y Pb Pr	RCA jack connectors used to deliver component video.
13	TV Pass Card	For future use.
14	S-VIDEO	Coaxial cable connector used to deliver high quality video to external devices that accept S-Video inputs, such as a high-end VCR or TV.
15	OPTICAL SPDIF	The OPTICAL SPDIF connector is an optical digital output connection that carries Dolby Digital 5.1 audio or PCM audio.
16	IEEE 1394	This high-speed data interface connector will support PCs, entertainment system devices, data storage, and future high definition TVs. (Optional.)

RF Bypass Switch Option

The RF Bypass switch option supports modulated/baseband video and audio outputs for a variety of configurations that enable you to meet the needs of individual subscribers. The RF Bypass causes the cable signal to pass the DCT5100 and go directly to a TV or VCR. Figure 2-3 illustrates the RF Bypass switch option:

Figure 2-3
RF Bypass switch option

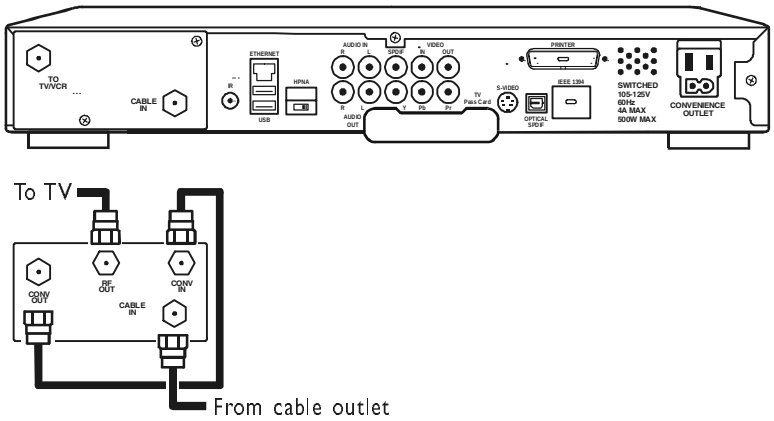

Samsung
Ex. 1026 - Page 20

Remote Controls

The basic DCT5100 uses the DRC 400 remote control. If your system offers an optional Interactive Program Guide (IPG), you may need a different remote control. Before using the DCT5100, refer to the remote control user instructions to program the remote control.

DRC 400 Remote Control

Figure 2-4 illustrates the DRC 400:

Figure 2-4
DRC 400 remote control

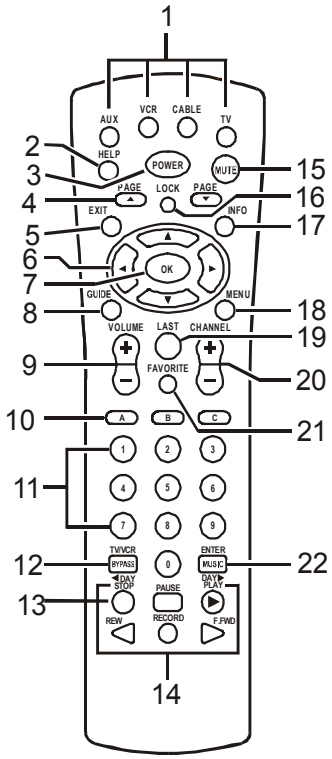

Table 2-3 describes the remote control keys:

Table 2-3
Remote control keys

Key	Item	Description
1	**AUX, VCR, CABLE, or TV**	Selects a device to control; remains active until another key is pressed.
2	**HELP**	Displays the help screen.
3	**POWER**	Turns the selected home entertainment component on or off.
4	**PAGE ▲ or PAGE▼**	Pages through menu screens and the program guide.
5	**EXIT**	Exits a menu or program guide.

Samsung
Ex. 1026 - Page 21

Key	Item	Description
6	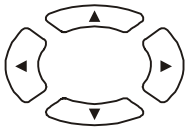	Moves the cursor around the program guide and menu screens.
7	**OK/SELECT**	Selects menu options such as pay-per-view events or tuning programs from the program guide. (The OK key performs the same functions.)
8	**GUIDE**	Displays the program guide.
9	**VOLUME + or** **VOLUME -**	Increases or decreases the volume of the currently selected device.
10	**A, B , or C**	Functionality determined from services offered by the service provider.
11	**NUMBER KEYS**	Directly selects a channel.
12	**TV/VCR BYPASS**	Enables the RF Bypass function (a cable-ready TV is required for this function).
13	**◄ Day** **Day ►**	Advances TV listings ahead or back 24 hours (when in cable mode).
14	**STOP, PAUSE, PLAY, REW, RECORD, F.FWD.**	Controls the VCR.
15	**MUTE**	Toggles sound on and off.
16	**LOCK/PPV**	View Pay-Per-View menu and limit viewing of selected programs.
17	**INFO**	Displays the current channel and program information (not supported by all applications).
18	**MENU**	Displays the Main menu.
19	**LAST**	Recalls the last channel or goes back one screen in the menu.
20	**CHANNEL + or -**	Changes channels by moving up or down.
21	**FAVORITE**	Displays preset favorite cable channels.
22	**ENTER/MUSIC**	Displays digital music channel menus (some TV models require pressing the Enter key after entering the channel number).

Samsung
Ex. 1026 - Page 22

Installing Batteries in the Remote Control

Before using the remote control, you must install two AA (1.5 V) alkaline batteries. Battery access is located on the back of the remote control.

To install batteries in an DRC 400:

1. Press the battery-compartment cover and slide off.
2. Insert two new batteries in the direction indicated on the inside of the battery compartment.
3. Slide the battery compartment cover back into place.

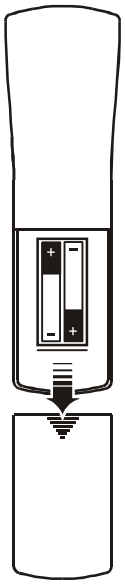

Section 3

Installation

This section provides instructions for cabling the DCT5100 and checking its operation. The cabling diagrams assist you with the installation.

Before you begin, review the installation instructions, gather the required items, and complete the tasks listed below:

- Determine if the subscriber's system requirements include an RF Bypass module. Installation instructions are provided with the module if purchased separately.
- Determine if you are connecting the DCT5100 to a standard TV, a composite (baseband) monitor, or a component monitor.
- Verify that you have the necessary 75-ohm coaxial cables with F-type connectors, RCA baseband phonotype cables, or S-Video cables, as applicable.
- Place the DCT5100 on a smooth, flat surface and remove any obstructions that could interfere with the free flow of air over, under, or around it. Advise the subscriber not to place anything on top of the unit.

Installing the DCT5100

To install the DCT5100:

1. If an add-on module is required and was not installed previously, install it now.
2. Determine if you are connecting the DCT5100 to a conventional TV, a monitor, or a component video or high-definition television (HDTV). To install the video connection:
   - For a conventional TV, use a 75-ohm coaxial cable with F-type connectors.
   - For a monitor, use an RCA phono cable to connect the VIDEO connector to the monitor.
   - For a component video or HDTV, use the component video outputs to connect to the DCT5100.
3. Locate the cabling diagram that matches the subscriber's configuration requirement.
4. Connect the cables as illustrated in that diagram.
5. Determine if you are connecting the DCT5100 to a data device (see "Data Devices" in this section). For installation details, refer to instructions included with the data device being installed.
6. Verify that the appropriate configuration information has been downloaded through the addressable control system, after the installation of the DCT5100 is completed.
7. Perform the boot cycle, including the download for the DCT5100. For details, refer to the boot cycle routine at the end of this section.
8. Perform the basic operational check in this section after installing the DCT5100.

Standard Cabling Diagram

Standard cabling for cable service is connecting the DCT5100 to a VCR. Figure 3-1 illustrates the basic RF cabling diagram that enables you to record on your VCR the currently tuned channel. When a VCR is not present, connect the coax cable from the DCT5100 directly to the CABLE IN connector on the TV. The output from the RF connection will be on channel 3 or 4, depending on the configuration information coming from the control system.

Figure 3-1
Standard VCR cabling

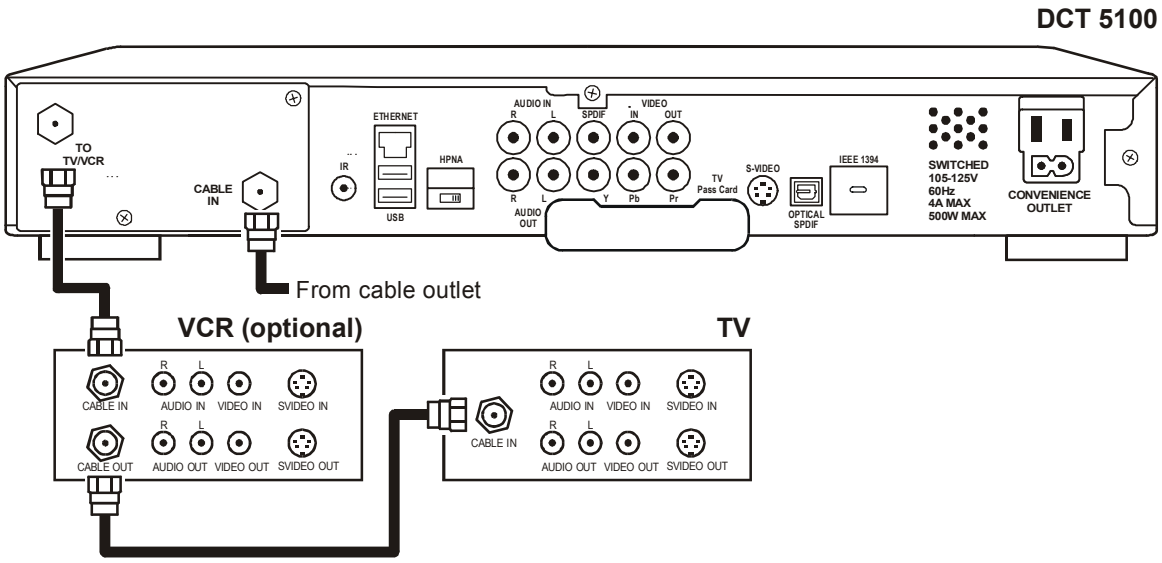

The RF connection does not carry stereo for digital channels. To receive stereo on digital channels, connect the DCT5100 using RCA baseband connectors illustrated later in this section.

Samsung
Ex. 1026 - Page 25

RF Bypass Switch Cabling Diagrams

The RF Bypass switch enables the cable signal to pass directly to a cable-ready TV, bypassing the DCT5100. The bypass mode is automatically initiated under one of three conditions: when the DCT5100 loses power, when it is turned off from the front panel, or when the user manually activates the switch by pressing the A/B key. If the DCT5100 loses power or is turned off, the subscriber can continue viewing the clear analog channels on the cable system. Activating bypass mode enables you to tape a tuned channel from the DCT5100 while watching a different clear channel that is bypassed to the TV.

Proper operation of the RF Bypass feature requires special configuration information from the control system, and proper user interface settings in the Electronic Program Guide (EPG).

Figure 3-2 illustrates RF cabling to an optional VCR using the RF Bypass switch. When a VCR is not present, install the supplied jumper cable from the CONV OUT to CONV IN on the RF Bypass switch.

Figure 3-2
RF Bypass switch

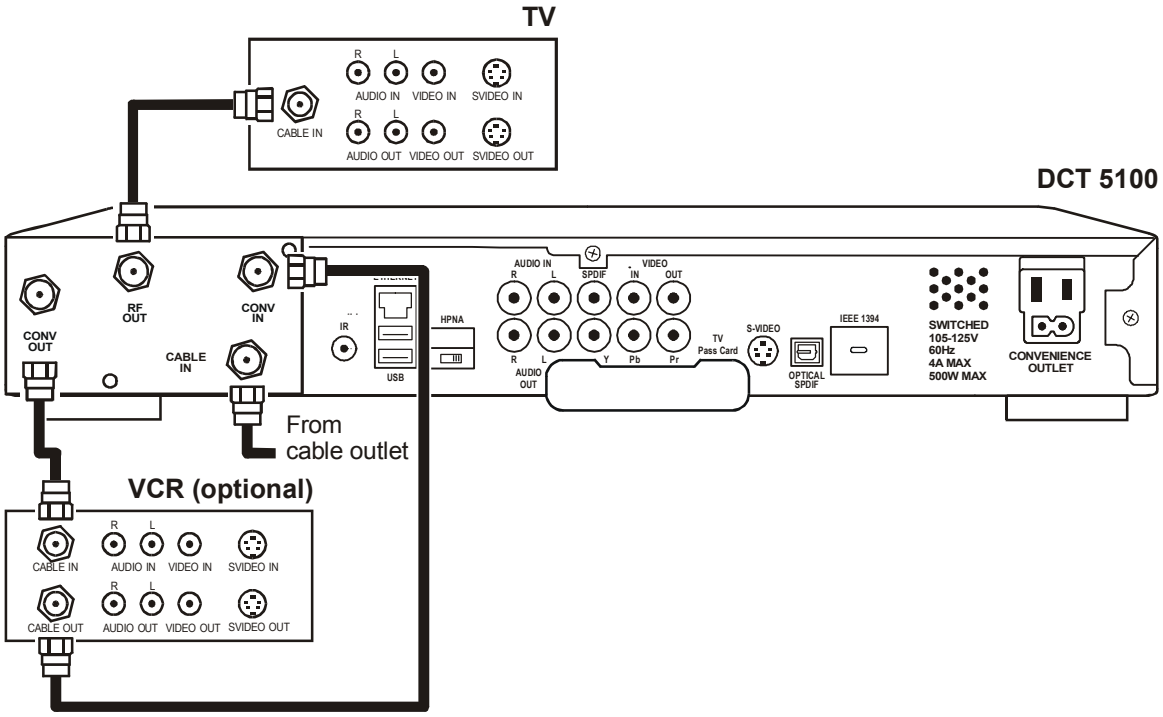

The DCT5100 RF output does not carry stereo for digital channels. All VCR recordings made using this connection will be in mono for digital channels.

Audio/Video Cabling Diagrams

The DCT5100 is capable of delivering Dolby AC-3 audio to a Dolby Digital stereo receiver using the SPDIF RCA connector. When connecting to a receiver, you can use the left/right RCA baseband audio outputs or the SPDIF RCA connection. The connections you use will depend on the capabilities of the audio receiver. The SPDIF port carries the audio stream in either a PCM or Dolby AC-3 format. If the subscriber does not have a Dolby Digital receiver, use the baseband Left/Right audio RCA connections to interface to the audio receiver.

The following illustrations show audio/video connections to a digital receiver, where the receiver functions as an audio/video router. When connecting the audio path to a digital receiver, reference your receiver's installation instructions for directions on connecting to baseband and SPDIF ports.

Samsung
Ex. 1026 - Page 27

The VCR and TV receive their audio/video signals from the currently selected input device on the digital receiver. This is important when the subscriber has another audio/video device such as a DVD player, a secondary VCR, a CD player, or other electronic component. It is recommended that you connect the TV to the monitor output so On-Screen menus associated with the receiver can be displayed. (In many cases the receivers themselves have interactive on-screen menus).

Figure 3-3 illustrates the DCT5100 interfacing directly to a digital receiver:

Figure 3-3
Audio system cabling

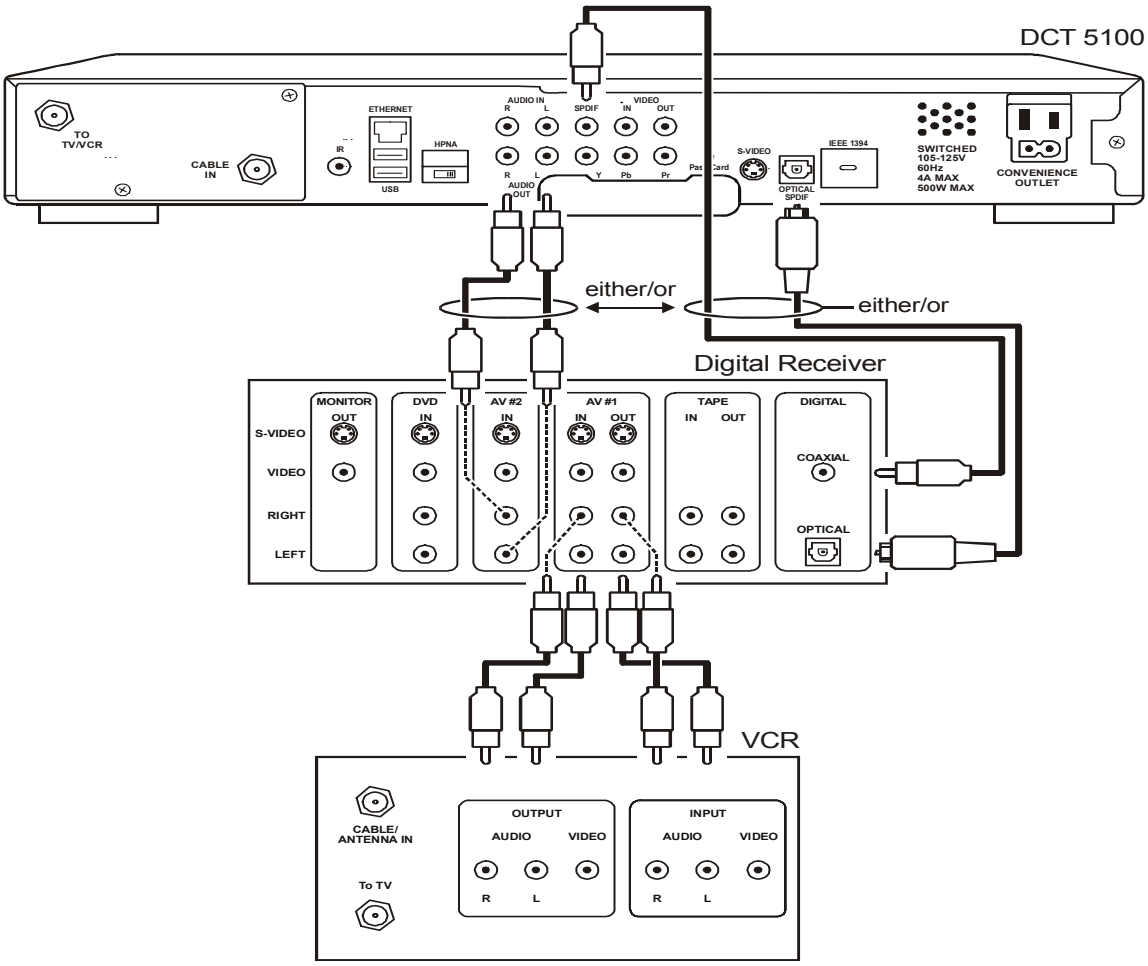

If your stereo receiver has the ability to check both the baseband and SPDIF ports for appropriate channels, you will want to connect both the baseband and SPDIF connections. Otherwise, do not connect both the baseband left/right RCA connections and the RCA SPDIF digital connection. The baseband connections are not necessary because the SPDIF port carries audio for both digital and analog channels providing for a single audio interface.

Figure 3-4 illustrates how to connect video outputs of the DCT5100:

Figure 3-4
Video System Cabling

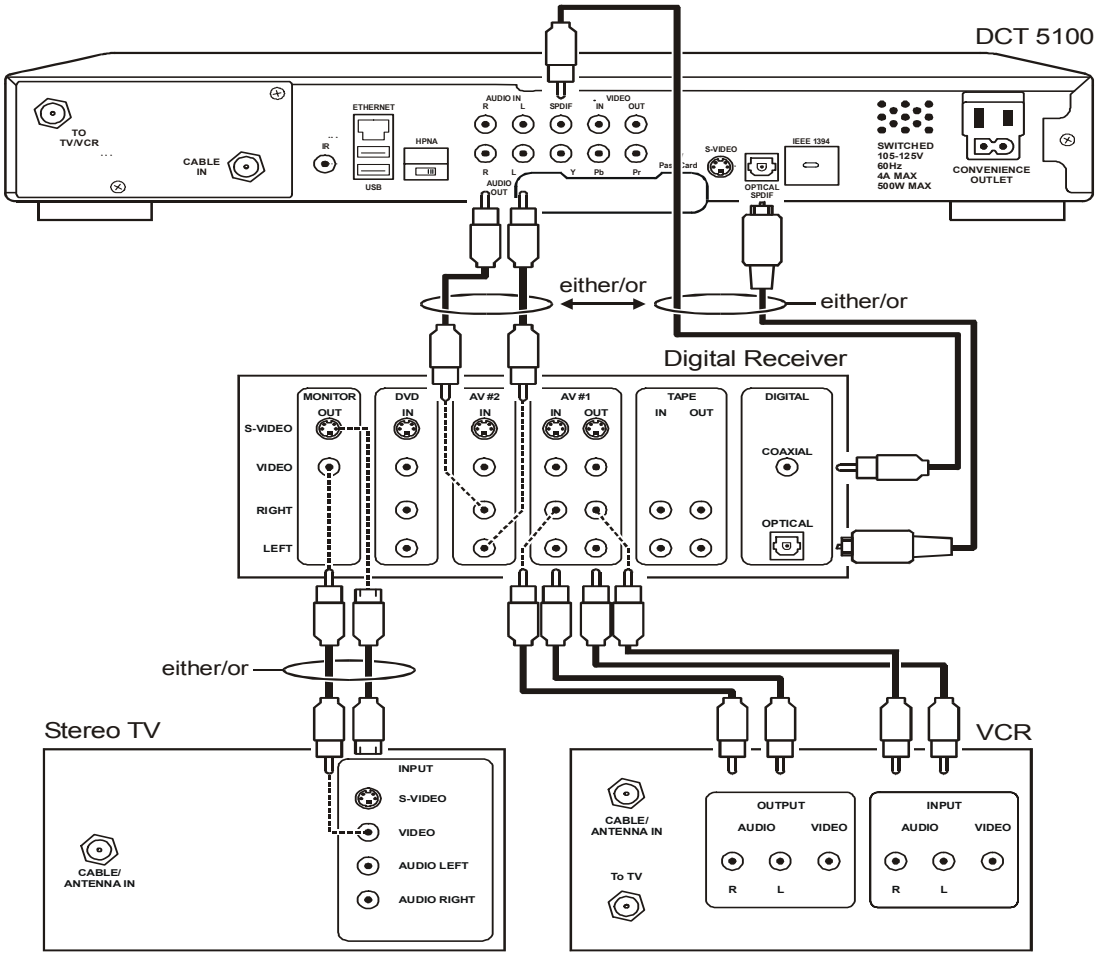

When connecting the video path, never connect both baseband composite video and S-Video together. Use only one connection because some entertainment equipment will not support both video inputs simultaneously.

Samsung
Ex. 1026 - Page 29

Figure 3-5 illustrates video cabling for high-definition TV:

Figure 3-5
HDTV Cabling

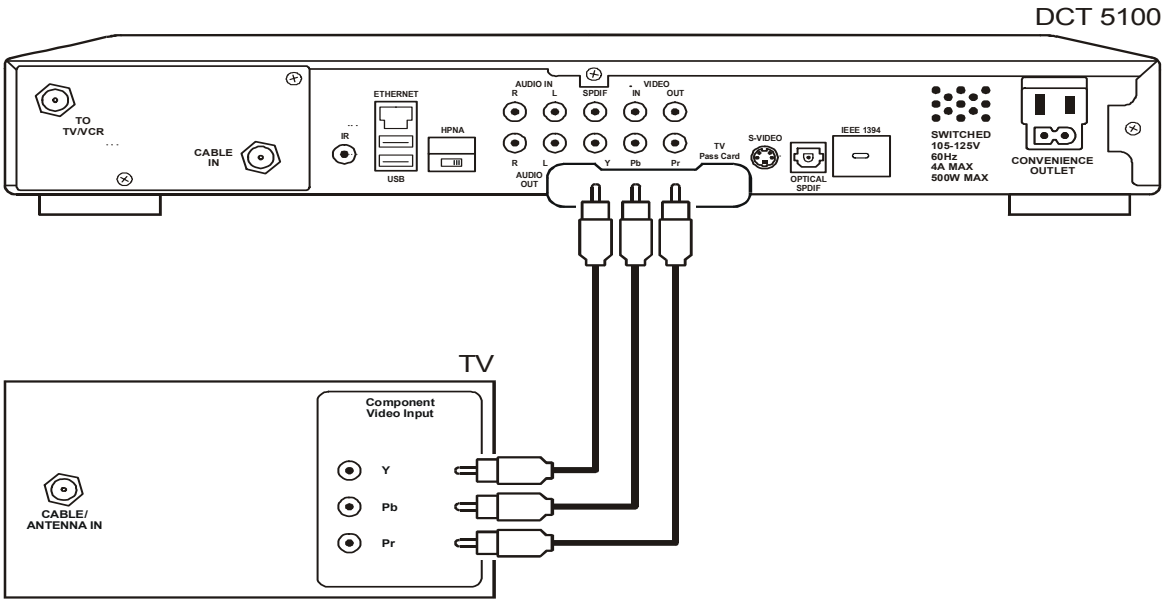

Audio-Only Receiver

When connecting to an audio-only receiver, such as a home mini system, follow a daisy-chain convention. Figure 3-6 illustrates how the audio and video paths flow through each device in a daisy-chain fashion:

Figure 3-6
Audio-only receiver

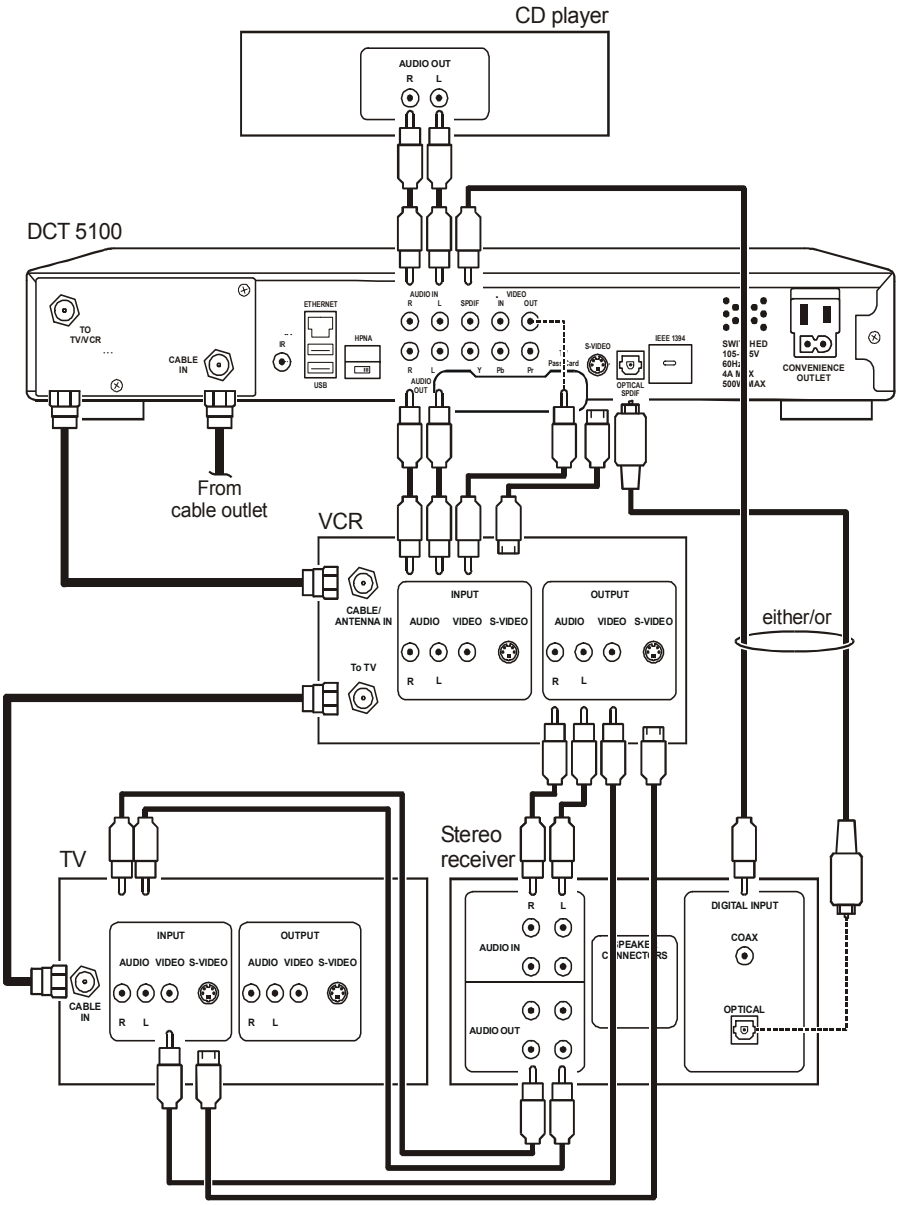

Samsung
Ex. 1026 - Page 31

The audio/video configuration illustrated enables digital stereo recording, including Dolby Surround® sound. Use only one set of RCA input connectors on the stereo. Figure 3-7 shows the audio/video connections with a stereo at the end of the chain:

Figure 3-7
Audio with stereo last

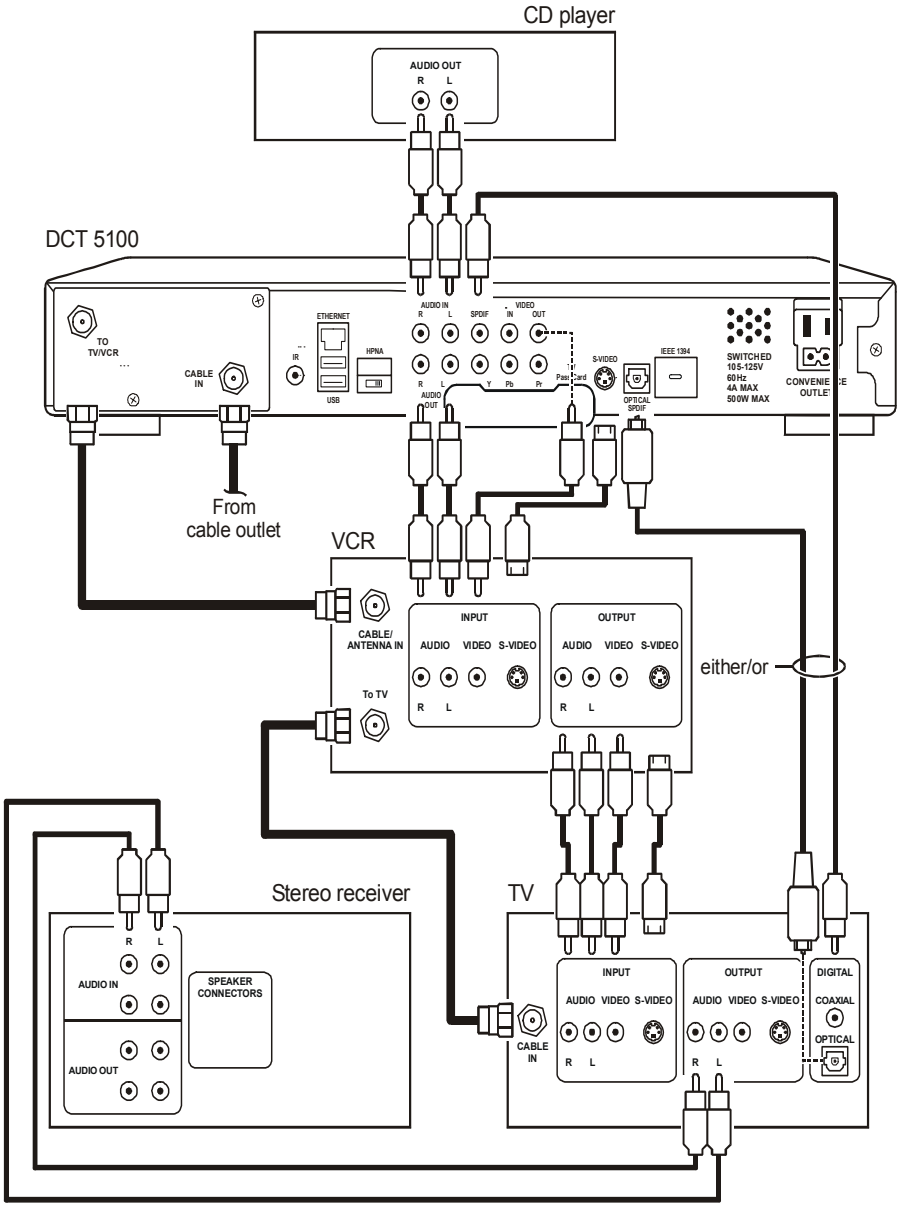

IR Blaster Transmitter

The optional IR Blaster provides control of the subscriber's VCR from the DCT5100. It consists of a low-power infrared transmitter attached to a six-foot cord and a mounting bracket. The mounting bracket is a clear plastic holder that has a pad of adhesive tape that enables you to install the IR Blaster near the VCR IR receiver. A mini-pin connector at the end of the cord connects the IR Blaster to the DCT5100. The IR Blaster is sold separately as an accessory item.

The availability and functionality of the IR Blaster depends on the installed application software.

Figure 3-8 illustrates the IR transmitter installed in the mounting bracket:

Figure 3-8
IR transmitter installed in mounting bracket

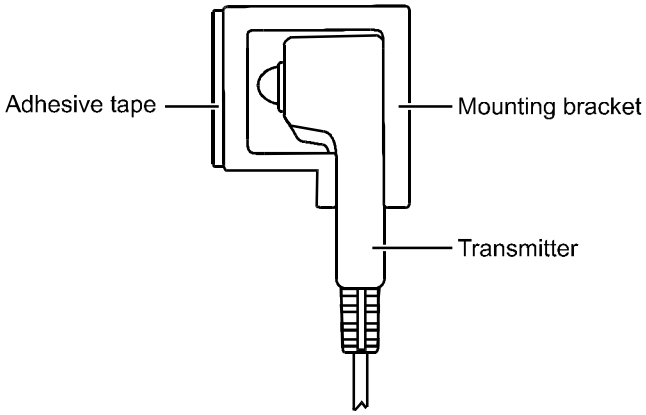

Once installed, the IR Blaster is activated automatically through the electronic program guide. Individual VCR codes are broadcast through the out-of-band data channel and are updated periodically as new codes are added.

The procedure for installing the IR Blaster is described in the following paragraphs.

Locating the IR Receiver on the VCR

The IR receiver area is not visible on some VCRs. To locate it:

- Obtain a piece of opaque material, such as a 3- by 5-inch index card.
- Use the card to block off areas of the VCR where the IR receiver might be located. Try to turn the VCR on and off with the remote control pointed directly at it, and close enough to reduce the possibility that the receiver will see IR reflections.
- Note the blocked area where the VCR is unresponsive to the remote control. This region contains the sensor and can be marked by loosely taping the index card to the area.

Because the IR Blaster radiates in an area approximately 40 degrees wide, you do not need to be precisely on target with the receiver. You may prefer to offset the location of the IR Blaster transmitter so that it is less likely to interfere with operation of the VCR remote control.

Samsung
Ex. 1026 - Page 33

Installing the IR Blaster

To install the IR Blaster:

1 Fit the transmitter into the mounting bracket (refer to Figure 3-8).

2 Plug the mini-pin connector into the IR jack on the rear panel of the DCT5100 rear panel as illustrated in Figure 3-9:

Figure 3-9
IR Blaster installed

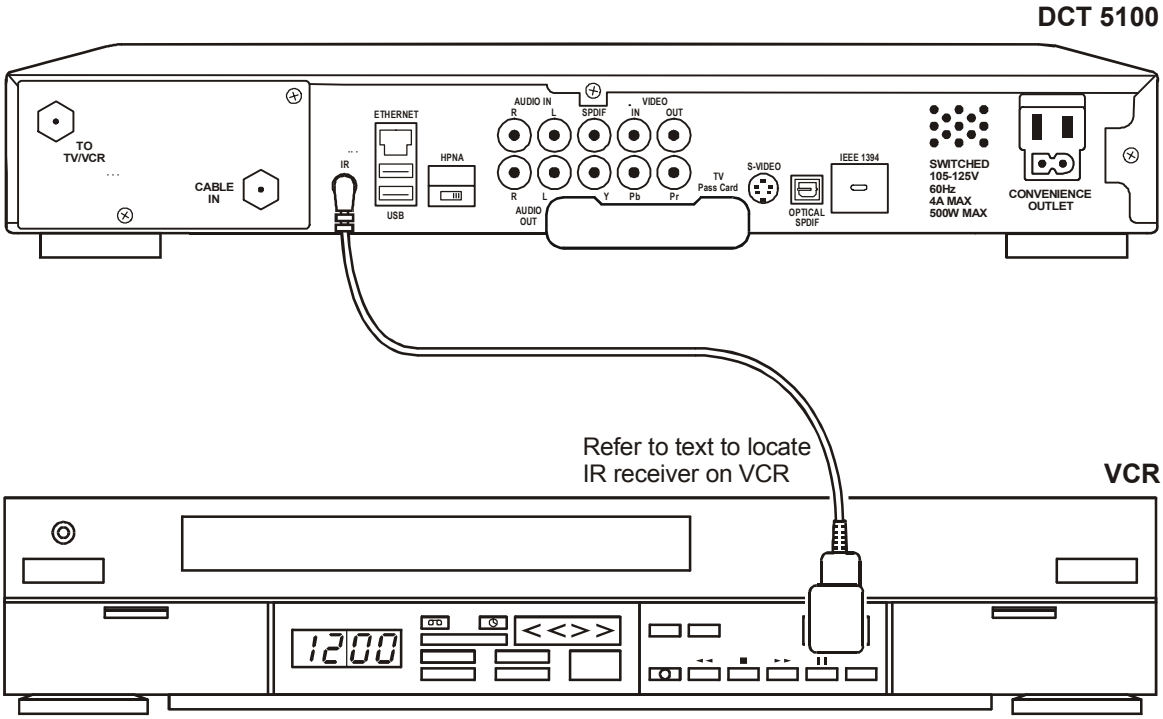

3 Remove the adhesive tape cover from the mounting bracket.

4 Position and press firmly to attach the mounting bracket to the IR receiver on the VCR. Be careful to route the wire so that it does not prevent loading tapes.

Checking the IR Blaster

The IR Blaster is now located near the receiver and the VCR can be controlled through the DCT5100. As a final check, operate the VCR using the remote control from various positions in the room. If the IR Blaster is obstructing the IR receiver on the VCR, move it slightly.

Data Devices

The DCT5100 provides optional high-speed data services such as Internet access, USB, Ethernet, and more.

The functionality of each data device port requires, and depends on, installed application software.

Rear Panel Connections

The DCT5100 rear panel includes a USB port and an Ethernet network interface. The following optional connections are also available:

- HPNA RJ-11 interface
- IEEE 1394

The interface connections illustrated in Figure 3-10 are samples of the types of data devices that can be interfaced through the DCT5100 rear panel:

Figure 3-10
Data Devices – Rear Panel

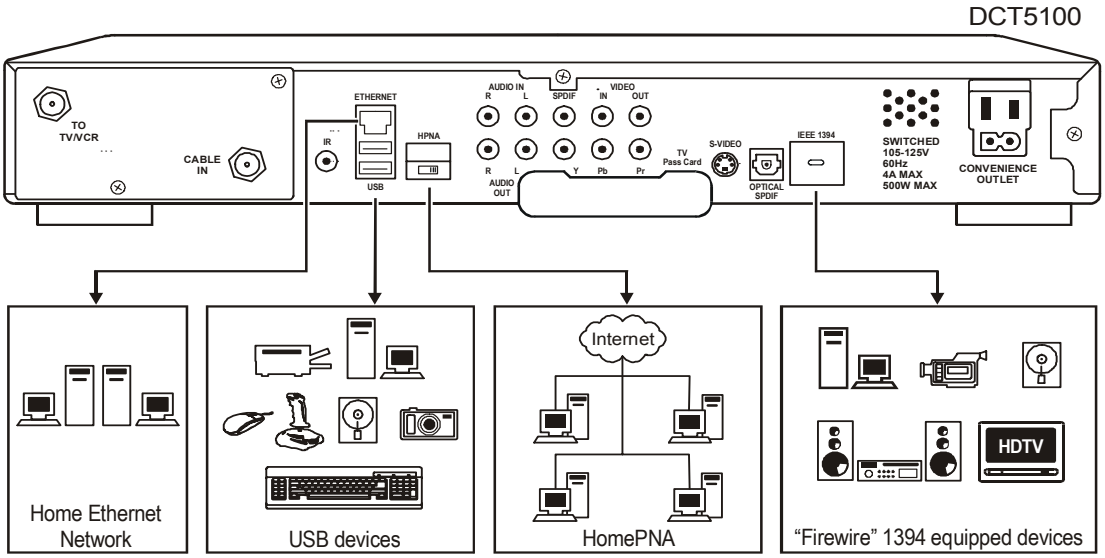

Ethernet RJ-45 Network Interface

The DCT5100 includes an Ethernet 10Base-T port that can be used to support home networking of the DCT5100.

HPNA RJ-11 Interface (optional)

The optional HPNA connector enables you to connect your DCT5100 to computers within your home using existing telephone lines.

Samsung
Ex. 1026 - Page 35

USB

The two USB ports on the rear panel are used to daisy-chain USB equipped devices such as printers and storage devices. This port can also be used to interface with USB keyboards, joysticks, and other USB peripherals used for PCs. An additional USB port is available on the front panel.

IEEE 1394 (optional)

The IEEE 1394 (Firewire-optional) is for interfacing to a High Definition Television (HDTV) or other consumer electronic device.

Front Panel Connections

The DCT5100 front panel includes a SmartCard interface and an additional USB port.

Smart Card Interface

The DCT5100 is equipped with an ISO 7816 SmartCard interface. This device is intended for Electronic Commerce use.

Additional USB Port

The USB port is used to daisy-chain USB equipped devices such as printers and storage devices. This port can also be used to interface with USB keyboards, joysticks, and other USB peripherals used for PCs. Two USB ports are also available on the rear panel.

Boot Cycle

After connecting the proper cabling to the DCT5100, plug the power cord into the DCT5100 and electrical wall outlet. Begin performing the boot cycle procedure:

- The LED displays `HUNT` and then `FR 1`.
- The DCT5100 begins searching for the headend Out of Band (OOB) frequency carrier. If the OOB frequency is not set to 75.25 MHz, the LED flashes `FR 1` and then flashes `FR 2`. This searching process repeats until the correct OOB frequency is found and the required message for your set-top model is acquired. Table 3-1 illustrates the LED displays and OOB frequencies:

Table 3-1
LED displays OOB frequencies

Display	Frequency	Description
| dl	**N/A**	OOB network download in progress
EF	**N/A**	Erasing Flash memory
FP	**N/A**	Flash memory is being programmed
____	**N/A**	Network download complete
Hunt	**N/A**	Hunting for OOB frequency
FR 1	**75.25 MHz**	Attempting to lock on frequency 1
FR 2	**104.20 MHz**	Attempting to lock on frequency 2
FR 3	**72.75 MHz**	Attempting to lock on frequency 3
FR 4	**92.25 MHz**	Attempting to lock on frequency 4
FR 5	**98.25 MHz**	Attempting to lock on frequency 5
FR 6	**103.75 MHz**	Attempting to lock on frequency 6
FR 7	**107.25 MHz**	Attempting to lock on frequency 7
FR 8	**107.40 MHz**	Attempting to lock on frequency 8
FR 9	**110.25 MHz**	Attempting to lock on frequency 9
FR 10	**116.25 MHz**	Attempting to lock on frequency 10
Au	**N/A**	Authenticating code object (displays only after download)

- When the correct OOB frequency is acquired, the LED flashes `FR number`.

Samsung
Ex. 1026 - Page 37

- When multiple OOB frequencies are used, the DCT5100 pauses 40 seconds on each valid frequency. The LED displays `dl` and a progress indicator, which identifies a software object download. The progress indicator, or crawling ant, moves one position around the dl display for each segment of download received. If the `dl` stops moving up and down on the LED for an extended period of time, contact the headend operator.

  The progress indicator usually moves at a consistent rate as segment downloads are received. If all the segments are retrieved in the first pass, the `EF`, `AU` and `FP` messages are displayed on the LED. If segments are dropped, the progress indicator appears to stall and then inch forward after the dropped segments are retired.

  When the progress indicator alternates between rapid and sluggish movement, this may indicate that the stream is spinning too fast for existing plant conditions.

- The LED displays `EF` for up to 60 seconds when the software object download is complete during flash erasure and then displays `FP` for up to 60 seconds during flash programming.
- The DCT5100 is ready for initialization by the headend controller when the LED display is blank. Verify that the DCT5100 is powered up or reset within two minutes of a completed download.

Boot Cycle Error Codes

If hardware or software problems occur, the DCT5100 displays error codes on the LED display.

Table 3-2 is a list of error codes that can occur during boot cycle startup:

Table 3-2
Error codes at boot cycle startup

Error Code	Description	When error occurs	Action Required
Eb 01	Object failed validation	After the LED displays `dl`, indicating validation check failed	Contact headend operator
Eb 02	Download time-out	After cycling twice through the OOB frequencies	None
Eb 03	Flash erase failed	After software object download complete and `EF` is displayed	Replace DCT5100
Eb 04	Flash programming failed	After software object download complete and `FP` is displayed	Contact headend operator
Eb 05	Invalid DLC frequency	After the LED displays `dl`, indicating validation check failed	Contact headend operator
Eb 06	Hardware initialization failed	After plugging the DCT5100 into an electrical outlet to begin the boot cycle	Replace DCT5100
Eb 07	Object failed validation	After software object download complete and `FP` is displayed	Contact headend operator
		After a successful software object download and DCT5100 is reset	No action required because DCT5100 repeats software object download process
Eb 08	Reserved		None

Samsung
Ex. 1026 - Page 38

Error Code	Description	When error occurs	Action Required
Eb 09	Check failed	Reset within two minutes of a complete software object download	No action required because DCT5100 repeats software object download process
Eb 10	SUDB recreation	After plugging the DCT5100 into an electrical outlet to begin the boot cycle	None
Eb 11	Failed to lock OOB frequency	After cycling twice through the OOB frequencies (LED then displays `Eb 02` indicating the software object download was unsuccessful)	Ensure proper cable connections
Eb 12	No COAC message received	After cycling twice through the OOB frequencies (LED then displays `Eb 02` indicating the software object download was unsuccessful)	Contact headend operator
Eb 13	No DLC message received	After cycling twice through the OOB frequencies (LED then displays `Eb 02` indicating the software object download was unsuccessful)	Contact headend operator
Eb 14	Bad object type or class	After the LED displays `dl`, indicating failed during attempted download	Contact headend operator
Eb15	No matching Platform ID found	After cycling twice through the OOB frequencies (LED then displays `Eb 02` indicating the software object download was unsuccessful)	Contact headend operator
Eb18	Object size mismatch	After the LED displays `dl`, indicating failed during attempted download	Contact headend operator
Eb19	Object size failed range check	After the LED displays `dl`, indicating failed during attempted download	Contact headend operator
Eb20	Invalid SUDB pointer	After plugging the DCT5100 into an electrical outlet to begin the boot cycle	None

Samsung
Ex. 1026 - Page 39

Operational Check

The operational check tests the communication link between the remote control and the DCT5100. Table 3-3 lists the operational check procedures:

Table 3-3
Operational check

Feature	Testing Procedure
Power on	Press POWER to turn on the DCT5100.
	Tune to the output channel of the DCT5100 (channel 3 or 4).
Channel Selection	Scan through the channels using the CHANNEL + or - keys.
	Tune to several channels by entering the channel number using the numeric keys.
Volume Control	Press VOLUME + or - on the remote control to increase the volume to its upper limit, lowest level, and to a comfortable level.
	Press MUTE to turn the sound off. Press MUTE again to restore the sound.

If the DCT5100 does not operate properly, refer to Section 5, “Troubleshooting”.

Section 4

Diagnostics

This section describes the diagnostics designed to confirm proper installation of the DCT5100. They include checking error states, signal integrity, and provisions to identify the DCT5100 on the network and verify communications with the headend. The diagnostic information is displayed on the front-panel LEDs and the On-Screen Display (OSD).

For diagnostics provided in this section:

- All indicators are in decimal notation unless otherwise noted.
- All signal-level and quality indicators are based on a 1% to 100% scale, unless otherwise noted.
- All sample displays are illustrative; actual data may differ from the examples.

Accessing Diagnostics

You can run the base platform software or Thin Client software to access the DCT5100 diagnostics. The Heritage mode and the Enhanced mode are the two modes of entry for accessing diagnostics. The Heritage mode uses the front-panel keys or IR remote and is commonly used with the DCT 1000, DCT 1200, and DCT2000 models. The Enhanced mode uses the front-panel keys and supports an on/off state-independent entry.

To access diagnostics using the Heritage and Enhanced modes:

1. Ensure the set-top is installed with the base platform or Thin Client software and that it is connected to an ac outlet.
2. Press POWER and then within 2 seconds press SELECT for Heritage mode.

   or

   Simultaneously press both CURSOR ◄ and CURSOR ► and hold both keys for three seconds for Enhanced mode.

   The DIAGNOSTICS main menu is displayed on the OSD and d01 is displayed on the front-panel LED. The DCT5100 is now in diagnostic mode.

Use the following keys to navigate diagnostics menus:

- Press CHANNEL ▲, CHANNEL ▼, CURSOR ▲, or CURSOR ▼ to select **d01** through **E**.
- Press CURSOR ◄, CURSOR ►, SELECT or ENTER to execute the selected diagnostic.
- Select **E** from the main menu to exit.
- Pressing POWER also exits diagnostic mode.

Table 4-1 illustrates the OSD of the diagnostic main menu. Note, d13 INTERACTIVE INFO will only be displayed when Thin Client is running in the DCT5100.

Table 4-1
Main menu - OSD

DIAGNOSTICS	
d01	GENERAL STATUS
d02	PURCHASE STATUS
d03	OOB STATUS
d04	IN BAND STATUS
d05	UNIT ADDRESS
d06	CURRENT CHANNEL STATUS
d07	UPSTREAM MODEM
d08	CODE MODULES
d09	MEMORY CONFIG
d10	KEYPAD/LED
d11	INTERFACE STATUS
d12	USER SETTING STATUS
d13	INTERACTIVE INFO
E	EXIT

Figure 4-1 is an example of the LED for the main menu selected diagnostic:

Figure 4-1
Main menu diagnostic - LED

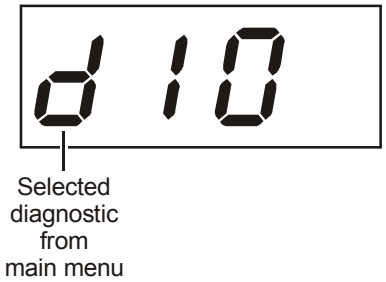

Samsung
Ex. 1026 - Page 42

d01 General Status

The GENERAL STATUS diagnostic provides system status information that displays on the OSD and LED. The information is updated each time the diagnostic is accessed. Table 4-2 illustrates the GENERAL STATUS OSD:

Table 4-2
GENERAL STATUS - OSD

GENERAL STATUS		
ERROR:	E 00	DISCONNECTED
PLATFORM ID:	0256	
FAMILY ID:	0000	
MODEL ID:	0087	
REMOD CHANNEL:	3	
SETTOP TIME:	xxxxxxxxxx GPS	

Figure 4-2 is an example of a GENERAL STATUS diagnostic LED:

Figure 4-2
General status - LED

Error Codes

Error codes are displayed on the LED when an error occurs. If multiple errors occur, the last recorded error is displayed. Errors displayed on the LED begin with `EP` (base platform or Thin Client) Error codes ranging from 00 to 17 to remain consistent with digital set-tops prior to the DCT5100. Error code `EP18` applies to the DCT5100 only.

Table 4-3 lists the different types of hardware errors, and the corresponding error code displayed on the LED:

Table 4-3
Fatal hardware initialization errors - LED

Error Code	Description
EP00	No Error
EP01	Not Connected
EP03	DRAM Error
EP04	SRAM Error
EP07	ROM Verification Failure
EP08	RAM Test Failure
EP09	Battery Test Failure
EP11	Invalid Unit Address
EP12	Power On Self Test Failure
EP14	GITV Startup Failure
EP15	TSI Structure Corrupt
EP18	Driver Initialization Failure

Connected State

The state of the set-top is either connected or disconnected. The connected state of the box is set by a DCT-operations connect or disconnect message. The OSD displays DISCONNECTED when the set-top is in the disconnected state and CONNECTED when it is in the connected state.

PLATFORM ID

The PLATFORM ID is also referred to as the ROM ID. The Platform ID is a 16-bit parameter used to differentiate between unique digital platform images in the field. It is displayed in hexadecimal format.

FAMILY ID

The FAMILY ID indicates two aspects of the set-top terminal, the manufacturer and the product family. It is displayed in hexadecimal format.

MODEL ID

The MODEL ID is the model of the set-top terminal. It is displayed in hexadecimal format.

Samsung
Ex. 1026 - Page 44

REMOD CHANNEL

The REMOD CHANNEL number can be either 3 or 4 (USA systems). The output port configuration displays the configuration of the DCT5100 output or re-modulated (remod) port. The output port/remod port is the interface from the DCT5100 to the subscriber's television set.

SETTOP TIME

The SETTOP TIME is current OOB set-top time displayed in Global Positioning System (GPS) seconds from Jan 6, 1980. SET-TOP TIME is an integer value ranging from 0 to 4294967295.

d02 Purchase Status

The PURCHASE STATUS diagnostic displays the status of subscriber event purchases on the OSD and LED. The OSD and LED information displays are updated each time this diagnostic is accessed.

Table 4-4 illustrates the PURCHASE STATUS diagnostics OSD:

Table 4-4
PURCHASE STATUS - OSD

PURCHASE STATUS	
PURCHASES	
UNSENT:	xx
UNACK:	xx
LAST SEQ NUM:	xxxx
LAST RB TIME:	xxxxxxxxxx
IPPV Status	Enabled

Figure 4-3 is the front-panel LED display for the PURCHASE STATUS diagnostic:

Figure 4-3
PURCHASE STATUS - LED

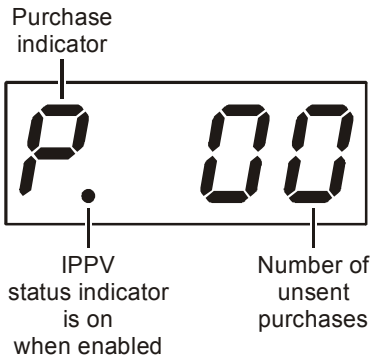

Unsent Purchases

The UNSENT field is the number of purchases in the set-top remaining to be polled. The number of purchases can range from 0 to 63 decimal.

Unacknowledged Reports

The UNACK is the number of reports that have not been acknowledged by the controller. The number of reports that have not been acknowledged is displayed in decimal format.

Last Acknowledged Purchase

The LAST SEQ NUM is the last acknowledged sequence number of a purchase sent by the controller. The sequence number is a 16 bit unsigned that is displayed in hexadecimal format.

Last Purchase Reportback

The LAST RB TIME indicates the last time the set-top attempted to reportback purchases to the controller. The time of the last purchase reportback is displayed in GPS seconds.

IPPV Status

The IPPV Status of Enabled or Disabled is displayed on the OSD. The LED IPPV Status indicator is on when IPPV status is enabled.

Table 4-5 lists the IPPV Status indicators for OSD and LED:

Table 4-5
IPPV status indicators – OSD and LED

OSD Display	LED Indicator	Definition
ENABLED	on	IPPV Enabled
DISABLED	off	IPPV Disabled

Samsung
Ex. 1026 - Page 46

d03 Out-Of-Band (OOB) Diagnostic

The Out-of-Band (OOB) DIAGNOSTIC indicates the status of the out-of-band control channel. The information is updated every 5 seconds while viewing the diagnostic.

Table 4-6 illustrates the OOB status on the OSD:

Table 4-6
OOB status - OSD

OOB DIAGNOSTIC			
OOB FREQUENCY:		075.25	MHz
CARRIER LOCK:		YES	
DATA:		YES	
EMM DATA:		YES	
SNR:	22.1 dB	GOOD	
AGC:	23 %	FAIR	
NETWORK PID:		100C	
EMM PID:		1003	
EMM PROVIDER ID:		100A	

Figure 4-4 illustrates the OOB Status display on the LED:

Figure 4-4
OOB status - LED

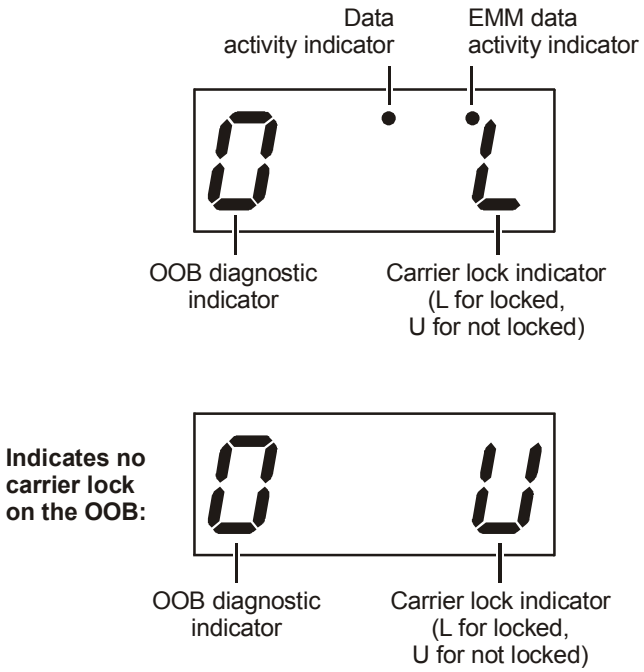

OOB FREQUENCY

The OOB FREQUENCY is the center frequency of the set-top OOB tuner. The frequency range is 70 to 130 MHz.

OOB CARRIER LOCK

The OOB CARRIER LOCK indicates if the OOB receiver is locked to the carrier.

Table 4-7 illustrates valid carrier lock indicators:

Table 4-7
CARRIER LOCK indicators – OSD and LED

OSD Display	LED Display	Definition
YES	L	Carrier locked
NO	U	Carrier unlocked

Samsung
Ex. 1026 - Page 48

OOB DATA

OOB DATA indicates if data is being carried by the OOB and EMM traffic, which is tracked separately. Table 4-8 lists OOB DATA indicators:

Table 4-8
DATA indicators – OSD and LED

OSD Indicator	LED Indicator	Definition
YES	on	OOB data detected within last 5 seconds
NO	off	OOB data not detected within last 5 seconds

OOB EMM DATA

The EMM indicators are on when EMM data is being carried on the OOB stream. Table 4-9 lists the indicators displayed on the OSD and LED:

Table 4-9
EMM DATA indicators – OSD and LED

OSD Indicator	LED Indicator	Definition
YES	on	EMM data detected within last 5 seconds
NO	off	EMM data not detected within last 5 seconds

OOB Signal-to-Noise Ratio (SNR)

The OSD displays an estimate of the carrier signal-to-noise ratio in dB with an explanation.

Table 4-10 lists the SNR indicators for the OSD:

Table 4-10
SNR indicators - OSD

Indicator	Meaning
GOOD	Good value
FAIR	Marginal signal level, check the signal
POOR	Unusable signal
INVALID	SNR value not valid

This field is only valid when carrier lock has been established.

OOB Automatic Gain Control (AGC)

The OSD displays an estimate of the AGC in percentage and an explanation for the value.

Table 4-11 lists the AGC values for the OSD:

Table 4-11
AGC indicators

Indicator	Meaning
GOOD	Good value
FAIR	Marginal signal level, check the signal
POOR	Unusable signal
INVALID	AGC value not valid

This field is valid only when carrier lock has been established.

NETWORK PID

The DCT5100 is tuned to the NETWORK PID to receive network messages. This value is displayed in hexadecimal format.

EMM PID

The EMM PID is the PID stream the set-top tunes to for EMM data. This value is displayed in hexadecimal format.

EMM PROVIDER ID

The EMM PROVIDER ID specifies the conditional access stream for the DCT5100 and is displayed in hexadecimal format.

Samsung
Ex. 1026 - Page 50

d04 In-Band (IB) Diagnostic

The DCT5100 displays the IN-BAND DIAGNOSTIC status of a digital carrier for the last attempted tuned channel. If a digital carrier is not present, this diagnostic indicates the carrier is not locked.

Table 4-12 illustrates the OSD of the IB receiver digital status:

Table 4-12
IN-BAND DIAGNOSTIC - OSD

IN-BAND DIAGNOSTIC		
MODE:		64 QAM
CARRIER LOCK:		YES
DATA:		YES
SNR	32.0 dB	GOOD
AGC: 23	%	FAIR
5 SECOND ERROR COUNTS:		
UNCORRECTABLE:		1234
CORRECTABLE:		5678

The display information is updated every 5 seconds when viewing the diagnostic.

Figure 4-5 illustrates the LED display:

Figure 4-5
IN-BAND DIAGNOSTIC - LED

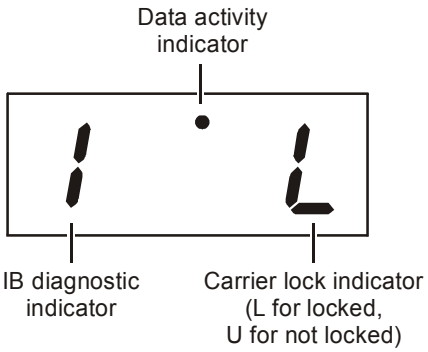

MODE

Table 4-13 lists the values for the MODE display on the OSD:

Table 4-13
MODE values - OSD

Value	Description
ANALOG IB	Contains an Analog channel
64 QAM IB	Contains a Digital channel with a modulation mode of 64 QAM
256 QAM IB	Contains a Digital channel with a modulation mode of 256 QAM

CARRIER LOCK

The IB CARRIER LOCK indicates if the IB receiver is locked to the carrier.

Table 5-15 illustrates valid values displayed on the LED and OSD:

Table 4-14
In-Band CARRIER LOCK - OSD and LED

OSD Display	LED Display	Definition
YES	L	Carrier locked
NO	U	Carrier unlocked

DATA

The IB data indicates if data is being carried on the IB stream. The indicators cover all packet processors regardless of which stream they are monitoring.

Valid values for the OSD and LED are illustrated in Table 4-15:

Table 4-15
In-Band DATA indicators – OSD and LED

OSD Display	LED Indicator	Definition
YES	on	IB Data detected within last 5 seconds
NO	off	IB Data not detected within last 5 seconds

Samsung
Ex. 1026 - Page 52

Signal-to-Noise Ratio (SNR)

The IB SNR displays on the OSD as an estimate of the carrier signal-to-noise ratio in dB with an explanation for the value.

Table 4-16 lists the values:

Table 4-16
In-Band SNR - OSD

Value	Description
GOOD	Good value
FAIR	Marginal signal level, check the signal
POOR	Unusable signal
INVALID	SNR value not valid

This display is only valid when carrier lock has been established.

Automatic Gain Control (AGC)

An estimate of the AGC displays in percentage and an explanation for the value displays on the OSD.

Table 4-17 lists the values and description for the OSD:

Table 4-17
In-Band AGC values - OSD

Value	Description
GOOD	Good value
FAIR	Marginal signal level, check the signal
POOR	Unusable signal
INVALID	AGC value not valid

This display is only valid when carrier lock has been established.

5 SECOND ERROR COUNTS

The 5 SECOND ERROR COUNTS represents the number of correctable and uncorrectable errors in the digital multiplex. The display is updated every 5 seconds and is reset each time the set-top is power cycled or another digital multiplex is tuned. The count is shown in decimal format and the maximum value is 9999. The maximum value displayed is 9999 even if the number of errors exceeds 9999.

d05 Unit Address

The UNIT ADDRESS diagnostic displays the unit address of the DCT5100.

Table 4-18 illustrates a unit address on OSD:

Table 4-18
UNIT ADDRESS - OSD

```
UNIT ADDRESS

TVPC INSTALLED      NO
UNIT ADDRESS:
        123-45678-90123-456
NETWORK ADDRESS:
        123-45678-90123-456

OOB MULTICAST 16 ADDRESS FOR:     nnnn
                0123          4567
                89AB          CDEF

MAC Address 1– DOCSIS:          xx xx xx xx xx xx

MAC ADDRESS 2 –                 xx xx xx xx xx xx
ETHERNET:
MAC ADDRESS 3 – 1394:           xx xx xx xx xx xx

MAC ADDRESS 4 – USB:            xx xx xx xx xx xx

MAC ADDRESS 5 – SET-TOP:        xx xx xx xx xx xx
```

The value *nnnn* represents the following datastreams: DATA, POLL, NET, EMM, SCC, and DWLD. The information on the OSD and LED updates every 5 seconds while the diagnostic displays. After each OSD update, the six datastreams cycle and a different datastream (*nnnn*) value with Multicast 16 Addresses is displayed.

TVPC INSTALLED

TVPC is a type of renewable security system. This diagnostic indicates if the renewable security system is installed and the type. The OSD displays `YES` if the TvPC is installed and `NO` if the TvPC is not installed.

Samsung
Ex. 1026 - Page 54

UNIT ADDRESS

The UNIT ADDRESS identifier indicates the unit address or physical address of the DCT5100 set-top terminal. The UNIT ADDRESS is unique and displayed in decimal format.

Figure 4-6 illustrates the LED display of a unit address:

Figure 4-6
UNIT ADDRESS - LED

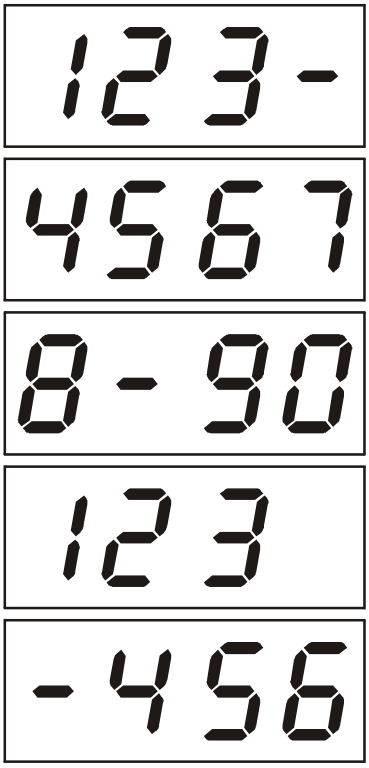

NETWORK ADDRESS

The NETWORK ADDRESS is the terminal's network address displayed in decimal format.

OOB MULTICAST 16 ADDRESS

The MULTICAST 16 ADDRESS specifies the stream to which the OOB multicast 16 addresses are assigned.

The valid stream types and descriptions displayed on OSD are listed in Table 4-19:

Table 4-19
MULTICAST 16 ADDRESS streams - OSD

nnnn OSD Display	Description
Net	Network
EMM	EMM
SCC	SCC_ECM
DnId	Download
Data	Data
Poll	Polling PID

The stream type and multicast 16 addresses cycle on the OSD display every 5 seconds.

MULTICAST 16 ADDRESS

This display is of the 16-bit multicast address in a 4-byte hexadecimal format. The Multicast 16 addressed messages filter on a 16-bit multicast address. The user processor can define up to four multicast addresses in hardware and any message matching one of the four is processed. Messages not matching the multicast address are discarded.

MAC ADDRESS

The MAC addresses are stored in Protected Flash and displayed in hexadecimal format. MAC addresses are assigned to the DOCSIS, Ethernet, 1394, USB, and set-top.

Samsung
Ex. 1026 - Page 56

d06 Current Channel Status

The CURRENT CHANEEL STATUS diagnostic displays a status of the last attempted tuned channel on the IB stream. The channel type determines the status display.

Table 4-20 illustrates an analog current channel status OSD:

Table 4-20
Analog CURRENT CHANNEL STATUS - OSD

CURRENT CHANNEL STATUS	
TYPE:	ANALOG aaa
PICTURE CARRIER	077.2500 MHz
AUTHORIZED:	YES
PURCHASABLE:	YES
PURCHASED:	YES
PREVIEW:	YES

Table 4-21 illustrates the digital CURRENT CHANNEL STATUS OSD:

Table 4-21
Digital CURRENT CHANNEL STATUS - OSD

CURRENT CHANNEL STATUS	
TYPE:	DIGITAL aaa 0xbb
INBAND FREQUENCY:	199.2500 MHz
AUTHORIZED:	
PURCHASABLE:	YES
PURCHASED:	YES
PREVIEW:	YES
MPEG VIDEO LOCK	YES
MPEG AUDIO LOCK	YES
PCR LOCK	YES

Figure 4-7 illustrates the LEDs for the analog and digital current channel status:

Figure 4-7
CURRENT CHANNEL STATUS - LED

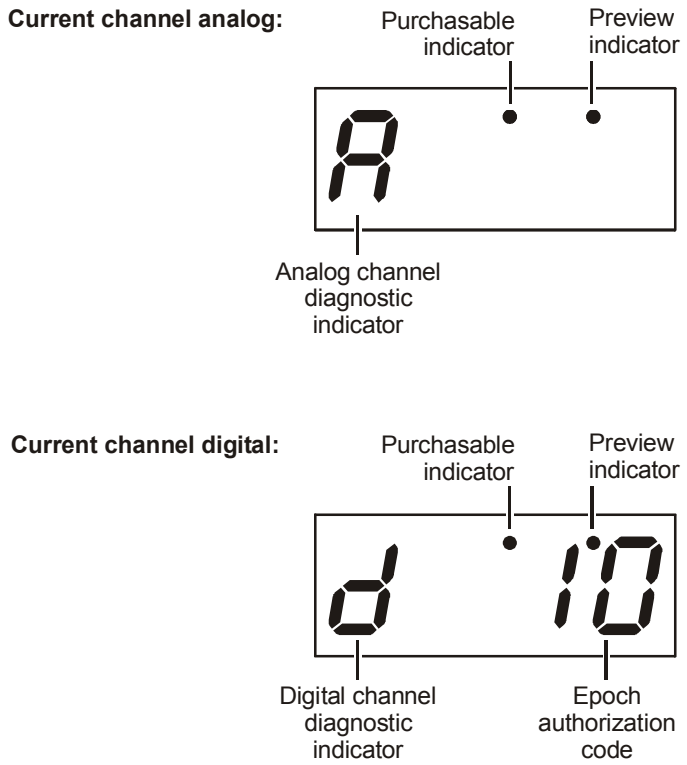

TYPE

The channel TYPE indicates if the channel is analog or digital. There are separate OSD and LED displays for analog and digital channels.

Table 4-22 lists the display information:

Table 4-22
Current channel TYPE – OSD and LED

OSD Display	LED Display	Definition
ANALOG	A	Current Channel Type is Analog
DIGITAL	d	Current Channel Type is Digital

Samsung
Ex. 1026 - Page 58

Table 4-23 lists the variable description codes used in the current channel status OSD:

Table 4-23
Variable descriptions - OSD

OSD Variables	State
aaa	For analog:
	SCR – scrambled
	CLR – Clear
	For digital :
	ENC – encrypted
	UNE – unencrypted
	CLR – Clear
bb	current epoch authorization reason

The current channel encryption mode is displayed next to the channel type and is indicated with the aaa variable on the OSD. The analog encryption mode value of aaa is replaced with SCR indicating scrambled or CLR indicating a clear analog signal. The information is displayed on the OSD and LED updating every 5 seconds.

The digital encryption mode value aaa is replaced with ENC indicating encrypted, UNE for unencrypted, or CLR for a clear digital signal. The value of bb is replaced with a hexadecimal number for the epoch authorization reason code.

AUTHORIZATION Reason Code

The current channel AUTHORIZATION reason code is in hexadecimal format. The reason code is for digital channels only and is displayed on the OSD and LED as an 0xbb variable.

PICTURE CARRIER or In-Band Frequency

The analog frequency is displayed as the picture carrier. The in-band frequency is a center RF carrier frequency tuned for the digital service. The frequency is displayed in MHz and ranges from 54 to 860 MHz.

AUTHORIZED

The AUTHORIZED diagnostic displays a parameter indicating if the set-top is authorized for the currently tuned service.

Table 4-24 is a list of valid authorized values:

Table 4-24
AUTHORIZED values

Values	Description
YES	Current channel is authorized
NO	Current channel is not authorized

Ex. 1026 - Page 59

PURCHASABLE

This parameter indicates whether the current program can be purchased for viewing.

Table 4-25 illustrates valid values displayed on the OSD and LED:

Table 4-25
Purchase indicators – OSD and LED

OSD Display	LED Indicator	Definition
YES	on	Current channel is purchasable.
NO	off	Current channel is not purchasable.

PREVIEW

This parameter indicates if the current program is in preview mode.

Valid values displayed on the OSD and LED are illustrated in Table 4-26:

Table 4-26
PREVIEW mode indicators – OSD and LED

OSD Display	LED Indicator	Definition
YES	on	Channel is in preview
NO	off	Channel is not in preview

MPEG VIDEO LOCK

The MPEG VIDEO LOCK indicates if the video stream is locked.

Table 4-27 is a list of valid values:

Table 4-27
MPEG VIDEO LOCK

Values	Definition
YES	Video Processor is locked to the video stream
NO	Video Processor is not locked to the video stream

Samsung
Ex. 1026 - Page 60

MPEG AUDIO LOCK

The MPEG AUDIO LOCK indicates whether the audio stream is locked.

Table 4-28 is a list of valid MPEG audio lock values:

Table 4-28
MPEG AUDIO LOCK values

Values	Definition
YES	Audio Processor is locked to the audio stream
NO	Audio Processor is not locked to the audio stream

PCR LOCK

The PCR LOCK indicates if the in-band receiver is locked to the current program clock reference.

Valid PCR lock values are illustrated in Table 4-29:

Table 4-29
PCR LOCK values

Values	Definition
YES	Channel is PCR locked
NO	Channel is not PCR locked

d07 RF MODEM (Upstream)

The RF MODEM diagnostic displays the appropriate modem information based on the module installed in the DCT5100.

Table 4-30 illustrates the status of the RF upstream modem:

Table 4-30
RF upstream modem

RF MODEM	
STATUS:	NOT CONFIGURED
CENTER FREQUENCY:	9.0000 MHz
REQUESTED POWER LEVEL:	23 dB
ACTUAL POWER LEVEL:	20 dB
REPORTBACK ADDRESS:	xx xx xx xx
LAST RB ATTEMPT TIME:	xxxxxxxxxx

The information on the OSD and LED is updated each time this diagnostic is accessed.

Figure 4-8 illustrates the LED for the RF upstream modem:

Figure 4-8
RF upstream modem - LED

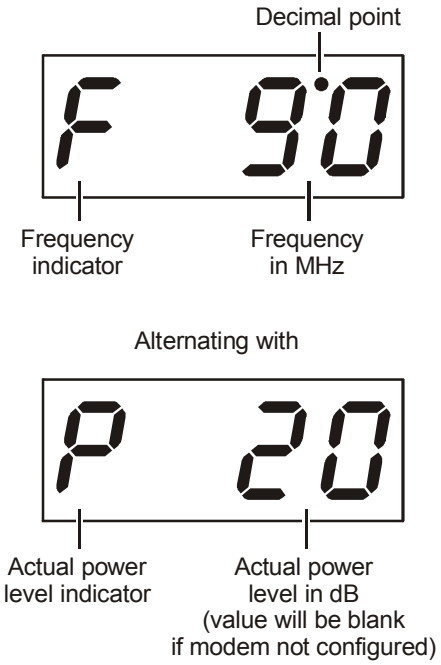

Samsung
Ex. 1026 - Page 62

RF Modem STATUS

The RF modem STATUS displays CONFIGURED or NOT CONFIGURED, depending on the state of the modem.

CENTER FREQUENCY

The RF modem CENTER FREQUENCY is displayed on the OSD and LED in MHz.

REQUESTED POWER LEVEL

The REQUESTED POWER LEVEL is the value assigned to the set-top during the RF leveling process. This level is displayed in dB or is blank if not configured.

ACTUAL POWER LEVEL

The ACTUAL POWER LEVEL is displayed on the OSD and LED in dB or is left blank if the power level has not been set.

REPORTBACK ADDRESS

The REPORTBACK ADDRESS is displayed if configured. The reportback address is displayed in 4-byte hexadecimal format.

LAST RB ATTEMPT TIME

The last attempted reportback made by the set-top is displayed here in GPS seconds.

d08 Code Modules

The CODE MODULES section includes information about the firmware loaded into flash memory and all versions of non-volatile code that are installed in the DCT5100. When the Native Suite is running, the diagnostics of the application operating system and all associated objects should be accessible.

Table 4-31 illustrates a code module display with status descriptions:

Table 4-31
CODE MODULES - OSD

CODE MODULES			
BOOTLOADER:		xx.xx	
DIGITAL SECURE PROCESSOR:			x.1
ANALOG SECURE PROCESSOR:			8404
OBJECT NAME	/ VER	STATUS	SEGS/TIME
BASEPF	01.11	nnnnnnnnnnnn	xxxxxxxxxx

Samsung
Ex. 1026 - Page 64

Figure 4-9 illustrates the code module LED display:

Figure 4-9
CODE MODULES - LED

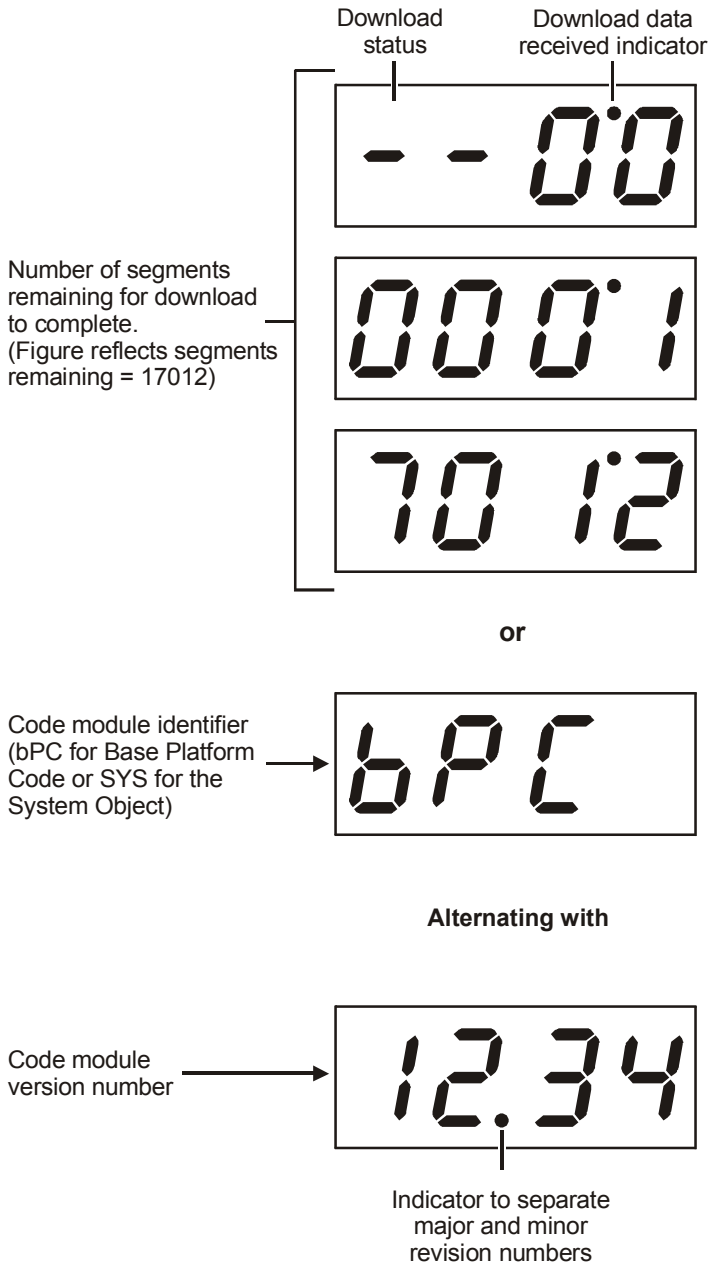

BOOTLOADER

The BOOTLOADER version is displayed in ASCII and includes major and minor revision numbers.

DIGITAL SECURE PROCESSOR

The Digital Secure Processor version is displayed in ASCII format.

ANALOG SECURE PROCESSOR

The Analog Secure Processor version is displayed in ASCII format.

Downloadable Object Information Table

This table is displayed at the bottom of the OSD screen. It includes the object name, version number, status of object and segments remaining in download process or total time of completed download. The information displayed for each object depends on the running environment.

OBJECT NAME / VERSION

The OBJECT NAME and VERSION columns contain the names and versions of all objects loaded, or in the process of being loaded into the set-top. The OBJECT NAME and VERSION are displayed in ASCII format. If a download is not in progress, the LED displays the environment currently running and version number as shown in Figure 5-9. On the LED display, `bPC` is displayed to represent base platform or Thin Client code.

STATUS

The STATUS associated with each object is displayed. The status value of *nnnnnnnnnnnn* is replaced with the status of the object. The information on the OSD and LED is updated every 5 seconds while the diagnostic is displayed.

Table 4-32 lists the object status values:

Table 4-32
Object STATUS

OSD Display	Status	Description
MEM ALLOC	Allocated	Memory for object has been allocated.
LOADING	Loading	Object is currently being loaded.
STARTING	Enabling	Object is in the process of being started (the constructor is running).
ENABLED	Enabled	Object is running.
ENA–NOT RUN	Enabled_Not_Runnable	Object has been enabled, but it is not runnable.
STOPPING	Disabling	Object is in the process of being stopped (the destructor is running).
DISABLED	Disabled	Object has been disabled.
DIS-NOT RUN	Disabled_Not_Runnable	Object has been disabled, and it is not runnable.

Samsung
Ex. 1026 - Page 66

OSD Display	Status	Description
DELETING	Deleting	Object is in the process of being deleted.
POSTPONED	Postponed	Object is not runnable in the current system; will be enabled on next boot.
CONNECTED	Connect	Connected to download PID – awaiting data.
PEND CONNECT	TryingToConnect	Trying to connect.

SEGS / TIME

Each object is displayed on the OSD and LED segments that remain for the object download in progress. The time (in GPS seconds) is displayed on the OSD when the download is complete.

d09 MEMORY CONFIGURATION

This diagnostic displays the memory configuration of the set-top. The AppOS may supplement the memory configuration with memory allocation per application in the future.

Table 4-33 illustrates the memory status display:

Table 4-33
MEMORY CONFIGURATION - OSD

```
MEMORY CONFIGURATION

SYSTEM RAM:        32    MB
FLASH:             16    MB
NVRAM:             256   KB
```

An LED display is not available for this diagnostic. The information on the OSD is updated upon entry to this diagnostic.

MEMORY CONFIGURATION

The amount of allocated memory for the SYSTEM RAM and FLASH are displayed in MB. The amount of allocated memory for NVRAM is displayed in KB.

d10 Keypad - LED

This diagnostics is used to verify the functionality of the LEDs and front-panel keypad of the DCT5100.

Front-Panel Keypad Diagnostic

This diagnostic verifies the functionality of the LEDs and front-panel keypad. Each LED segment that is lit corresponds with a front-panel key press.

The OSD displays characters in the format shown in Figure 4-10:

Figure 4-10
Character format display - OSD

<	>	U	D	Î	M	P	B	G	S	+	-

A character on the OSD is highlighted when the corresponding front-panel key is depressed.

Samsung
Ex. 1026 - Page 68

d11 INTERFACE STATUS

Table 4-34 illustrates the INTERFACE STATUS diagnostic OSD display when running in base platform or Thin Client:

Table 4-34
INTERFACE STATUS

INTERFACE STATUS	
DOCSIS Tuner & xmitter:	INST
1394 I/O Device:	NOT INST
USB I/O Device:	NOT INST
10bT Ethernet Device:	NOT INST
Parallel Port:	NOT INST
IR Transmitter:	NOT INST
Hard drive status:	NOT INST
Smart Card:	NOT INST

The LED display is not available for INTERFACE STATUS diagnostics. The information on the OSD is updated upon entry to this diagnostic selection.

INTERFACE STATUS

This diagnostic displays the status of the following standard and optional interfaces as INST for installed or NOT INST for not installed:

- DOCSIS TUNER & XMITTER
- 1394 I/O DEVICE
- USB I/O DEVICE
- 10bT ETHERNET DEVICE
- PARALLEL PORT
- IR TRANSMITTER
- HARD DRIVE
- SMART CARD

d12 USER SETTING STATUS

This section displays the user settings. Table 4-35 shows an example of the diagnostic information recommended for the User Setting Status OSD. The actual format for the display may vary. The information on the OSD and LED is updated upon entry to the diagnostic OSD.

Table 4-35 illustrates the USER SETTING STATUS display:

Table 4-35
USER SETTING STATUS – OSD

USER SETTING STATUS	
OUTPUT TYPE	1080I
CLOSED CAPTION	ENABLED
PEN SIZE	STANDARD
FONT STYLE	MONO SERIF
FOREGROUND COLOR	BLACK
FOREGROUND OPACITY	AUTO
BACKGROUND COLOR	WHITE
BACKGROUND OPACITY	AUTO
SERVICE SELECTION	PRIMARY LANGUAGE
SETTINGS	USER
ASPECT RATIO:	LETTERBOX

OUTPUT TYPE

Displays the High Definition video display format:

OSD Display	Definition
1080I	1920 pixels wide by 1080 pixels high, 16:9 screen aspect ratio, 30 frames per second, interlaced.
720P	1280 pixels wide by 720 pixels high, 16:9 screen aspect ratio, 30 frames per second, progressive.
480P	720 pixels wide by 480 pixels high, 4:3 screen aspect ratio, 30 frames per second, progressive.
480I	720 pixels wide by 480 pixels high, 4:3 screen aspect ratio, 30 frames per second, interlaced.
NATIVE	Adjusts the video display format to match the video source format. Valid for 16:9 High Definition displays only.

When high definition output modes (1080I, 720P, or 480P) are selected, graphic overlays such as electronic program guides can only be viewed on the component video outputs. The baseband video output will continue to transmit baseband video (480I), but without graphic overlays.

Samsung
Ex. 1026 - Page 70

CLOSED CAPTION

Displays the CLOSED CAPTION Rendering state selected by the user:

OSD Display	Definition
ENABLED	Closed Caption rendering enabled.
DISABLED	Closed Caption rendering disabled.

PEN SIZE

Displays the PEN SIZE selected by the user:

OSD Display	Definition
AUTO	Pen Size is controlled by the Closed Caption stream.
STANDARD	Standard Pen Size.
LARGE	Large Pen Size.
SMALL	Small Pen Size.

FONT STYLE

Displays the FONT STYLE selected by the user:

OSD Display	Definition
AUTO	Font Style is controlled by the Closed Caption stream.
MONO SERIF	Monospaced with serifs.
PROPORTION SERIF	Proportionally spaced with serifs.
MONO NO SERIF	Monospaced without serifs.
PROPORTION NO SERIF	Proportionally spaced without serifs.
CASUAL	Casual font type.
CURSIVE	Cursive font type.
SMALL	Small capitals.

FOREGROUND COLOR

Displays the FOREGROUND COLOR option selected by the user:

OSD Display	Definition
AUTO	Foreground Color is controlled by the Closed Caption stream.
WHITE	White Foreground.
BLACK	Black Foreground.
RED	Red Foreground.
GREEN	Green Foreground.
BLUE	Blue Foreground.
YELLOW	Yellow Foreground.

OSD Display	Definition
MAGENTA	Magenta Foreground.
CYAN	Cyan Foreground.

FOREGROUND OPACITY

Displays the FOREGROUND OPACITY option selected by the user:

OSD Display	Definition
AUTO	Foreground Color is controlled by the Closed Caption stream.
TRANSPARENT	Transparent Foreground Opacity.
TRANSLUCENT	Translucent Foreground Opacity.
SOLID	Solid Foreground Opacity.
FLASHING	Flashing Foreground Opacity.

BACKGROUND COLOR

Displays the BACKGROUND COLOR option selected by the user:

OSD Display	Definition
AUTO	Background Color is controlled by the Closed Caption stream.
WHITE	White Background.
BLACK	Black Background.
RED	Red Background.
GREEN	Green Background.
BLUE	Blue Background.
YELLOW	Yellow Background.
MAGENTA	Magenta Background.
CYAN	Cyan Background.

BACKGROUND OPACITY

Displays the BACKGROUND OPACITY option selected by the user:

OSD Display	Definition
AUTO	Background Color is controlled by the Closed Caption stream.
TRANSPARENT	Transparent Background Opacity.
TRANSLUCENT	Translucent Background Opacity.
SOLID	Solid Background Opacity.
FLASHING	Flashing Background Opacity.

Samsung
Ex. 1026 - Page 72

SERVICE SELECTION

Displays the SERVICE SELECTION selected by the user:

OSD Display	Definition
AUTO	Service Selection is controlled by the Closed Caption stream.
PRIMARY LANGUAGE	Primary language established by the provider.
SECONDARY LANGUAGE	Secondary language established by the provider.
3	Set by the provider.
4	Set by the provider.
5	Set by the provider.
6	Set by the provider.

SETTINGS

Displays the SETTING selected by the user:

OSD Display	Definition
AUTO	Closed Caption settings are determined by the closed caption stream regardless of user modification.
USER	Closed Caption user settings are used as configured by the user.

ASPECT RATIO Mode

Displays the ASPECT RATIO conversion mode selected by the user. The aspect ratio conversion mode is the width-to-height ratio of your screen.

OSD Display	Definition
LETTERBOX	Letterbox
PAN-SCAN	Pan and Scan
CROPPED	Cropped, fixed Pan and Scan.

d13 INTERACTIVE INFO

This section describes the interactive information that is displayed only when Thin Client platform is running. Table 4-3 shows an example of the diagnostic information on the INTERACTIVE INFO Diagnostics OSD. The actual format for the display may vary. The information on the OSD and LED is updated at least once every 5 seconds while the diagnostic is displayed.

Table 4-36 illustrates a code module display with status descriptions:

Table 4-36
INTERACTIVE INFO - OSD

INTERACTIVE INFO	
IP ADDRESS:	0.0.0.0
UPM:	00000021
UPSTREAM ID:	0000
DOWNSTREAM ID:	0000
STATE:	UNCONFIG
MAC ABORT COUNTER:	0000
SOCKET PORT STATE:	
0	UNUSED
1	UNUSED
2	UNUSED
3	UNUSED
4	UNUSED

Figure 4-11 illustrates the code module LED display:

Figure 4-11
Sample INTERACTIVE INFO LED

IP ADDRESS

The IP ADDRESS for the set-top is assigned by the NC 1500. It is displayed as four decimal fields delimited by periods, for example, *xxx.xxx.xxx.xxx* where each *xxx* ranges from 000 to 255.

`0.0.0.0` is displayed when the IP address is not configured or unknown.

Samsung
Ex. 1026 - Page 74

UPM

The UPM is the upstream modem address. The value used for the UPM is the same as the terminal ID assigned by the DAC 6000. The UPM is a unique, system-generated, eight-digit integer between 1 and 16777215.

`00000000` is displayed when the UPM is not configured or unknown.

UPSTREAM ID

The UPSTREAM ID is a set-top transmission parameter assigned by the DAC 6000 for the interactive set-top. The UPSTREAM ID is a four-digit decimal value ranging from 0000 to 9999.

`0000` is displayed if the UPSTREAM ID is not configured or unknown.

DOWNSTREAM ID

The DOWNSTREAM ID is a set-top transmission parameter assigned by the DAC 6000 for the interactive set-top. The DOWNSTREAM ID is a four-digit decimal value ranging from 0000 to 9999.

`0000` is displayed if the DOWNSTREAM ID is not configured or unknown.

STATE

The STATE parameter indicates the interactive status of the set-top:

LED	OSD	State Description
U	**UNCONFIG**	Set-top is not configured for the interactive system and platform should run as Pre-Interactive.
C	**MAC_CONNECT**	Set-top is waiting to establish connection to MAC Pid Stream.
I dc	**INIT_WAIT_DC_OR_C**	Set-top is running in the interactive initialization state and waiting for the default configuration or the contention channel list messages.
I L	**WAIT_LM_ACK**	Set-top is running in the interactive initialization state and waiting for Link Management Response ACK for Local Address Message.
I SO	**WAIT_SO_ACK**	Set-top is running in the interactive initialization state and waiting for a Sign On acknowledgement.
I LA	**WAIT_LA_OR_SO**	Set-top is running in the interactive initialization state and waiting for Logical Address or Sign On with verification Frequency message.
S I	**INIT_STOPPED**	Set-top is in the interactive initialization state and the TransMode has stopped.
r dc	**RUN_WAIT_DC_OR_C**	Set-top is running in the interactive state and waiting for the default configuration or the contention channel list messages.
r	**RUNNING**	Set-top interactive state is running, sending idle messages, and waiting for any Prepare for Poll or MAC messages.
S	**RUN_STOPPED**	Set-top interactive run state has stopped and set-top is waiting for status or transmission control message.
00	**INVALID**	Set-top interactive state is unknown or invalid.

MAC ABORT COUNTER

The MAC ABORT COUNTER increments every time the MAC layer reaches the Cell Abort Count limit. The MAC ABORT COUNTER is reset by the successful upstream transmission of a cell, for example, when an ACK is received by the set-top.

If the MAC ABORT COUNTER reaches the MAC Abort Count limit, the set-top assumes the MAC layer is unavailable due to noise, congestion, or some other problem. The set-top will stop transmitting data upstream, report an error to the calling function, and attempt to re-enter the network using the initialization process.

0000 is displayed as default or if the MAC ABORT COUNTER is not configured or unknown.

SOCKET PORT STATE

The SOCKET PORT STATE indicates socket mode and activity:

OSD Value	Description
UNUSED	The socket is not being used.
OPENED	The socket is open.
READY	The socket is ready to send or receive.
RECEIVING	The socket is receiving data from the application server.
SENDING	The socket is sending data to the application server.
UNKNOWN	The socket state is invalid or unknown.

Samsung
Ex. 1026 - Page 76

Section 5

Troubleshooting

This section provides troubleshooting guidelines. If problems are still occurring after performing the diagnostics, call the Motorola TRC for assistance at **1-888-944-HELP (1-888-944-4357)**.

When contacting the TRC from outside the United States, call the main switchboard number, **215-323-1000**, and ask for extension **4200**.

Problem	Possible Solution
Remote control not responding	Check for an obstruction between the remote control and the DCT5100.
	Aim the remote control directly at the DCT5100, not the TV or VCR.
	Press and release operation keys one at a time, firmly and deliberately.
	Try changing channels using the buttons on the front panel.
	Check the batteries in the remote control and install new batteries if needed.
No sound from the TV	Press MUTE on the remote control to restore sound.
	Check that you have the correct cables for the audio ports.
Not receiving a cable signal	Verify that the TV set is tuned to the output channel 3 or 4 of the DCT5100.
No Video on TV	Check that you have selected the correct video output mode. The default mode is standard video available on RF, S-Video and Baseband.
	If you are using component video outputs, you must set the video output to the correct format (1080i, 720p, 480p or Native). When component outputs are selected, the other outputs will not pass video.

Appendix A

Specifications and Features

Specifications

Input frequency	
Video	54 MHz through 860 MHz
DOCSIS	Up to 860 MHz
HRC/IRC frequency assignments	Downloadable
Number of channels	136 carriers per cable, 1 or 2 cables
Analog	1 channel per carrier
Digital	More than 1 channel per carrier, content dependent
Input analog video level	0 dBmV through +15 dBmV
Input digital average level	64 QAM: –18 dBmV through +5 dBmV
	256 QAM: –12 dBmV through +5 dBmV
Data carrier	QPSK-modulated carrier
Frequency	Agile Receiver 70 – 130 MHz
Bandwidth	1.5 MHz
Level	–15 dBmV through +5 dBmV
Mechanical security	Standard: security screws, unichassis construction
Operating environment range	
Temperature	15° through 40°C (32° through 104°F)
Humidity	5% through 95% (noncondensing)
ac voltage	105 through 125, 60 Hz
Power dissipation	40 W at 115 Vac
Size	17.13 in. × 12.75 in. × 2.75 in.
Weight	9.5 pounds

Features List

	Standard	Option
Triple Tuner:		
Video/Audio/Data	•	
DOCSIS	•	
Out of Band	•	
DOCSIS Modem	•	
Clear Analog tuning	•	
BTSC Decode	•	
RF Return	•	
IR	•	
AC Convenience outlet	•	
A/B Cable module		•
RF Bypass module		•
USB (3 ports)	•	
Ethernet 10 Mbit	•	
Audio line-in/loop-through	•	
Video input (2)	•	
Smart Card reader	•	
S-Video output	•	
Audio SPDIF output (optical and coaxial)	•	
IR Blaster port	•	
Renewable security slot	•	
IEEE 1394 port		•
Component video (Y Pb Pr)	•	

Samsung
Ex. 1026 - Page 79

Abbreviations and Acronyms

AGC	Automatic Gain control
ASTB	Advanced Set-top Box
CRC	Cyclic redundancy check
CSR	Customer Service Representative
DCT5100	Digital Consumer Terminal 5100
DRAM	Dynamic random access memory
EMM	Entitlement management message(s)
FLASH	A type of nonvolatile memory
GPS	Global positioning system
HRC	Harmonically related carriers
IPG	Interactive program guide
IPPV	Impulse Pay-Per-View
IR Blaster	Infrared Blaster
IRC	Incrementally related carriers
ITU	International Telecommunication Union
MPAA	Motion Picture Advisory Association
MPEG-2	An advanced compression standard for digital audio and video encoding established by the Motion Picture Experts Group
NVOD	Near Video on Demand
NVRAM	Non-volatile random-access memory
OSD	On-screen display
PCR	Program clock reference
PID	Packet identifier
PPV	Pay-Per-View
QAM	Quadrature amplitude modulation
QPSK	Quadrature phase shift keying
RSA	Return for Service Authorization
SNR	Signal-to-noise ratio
SPDIF	Sony Philips Digital Interface Format
TCP/IP	Transmission Control Protocol/Internet Protocol
TRC	Technical Response Center
TvPC	TV PassCard
VOD	Video on Demand

MOTOROLA

495014-001
05/02

MGBI