IN THE UNITED STATES DISTRICT COURT
FOR THE DISTRICT OF NEW JERSEY

TVnGO LTD. (BVI), Plaintiff, v. LG ELECTRONICS INC. and LG ELECTRONICS U.S.A., INC., Defendants.	Civil Action No. 1:18-cv-10238-RMB-KMW

PLAINTIFF TVnGO'S OPENING CLAIM CONSTRUCTION BRIEF

Matthew T. Eyet, Esq.
NJ Supreme Court I.D. No. 018872010
SANDELANDS EYET LLP
1545 U.S. Highway 206, Suite 304
Bedminster, NJ 07921
meyet@se-llp.com
908-470-1200

Charles E. Cantine, Esq. (*pro pac vice*)
Joseph Diamante, Esq. (*pro hac vice*)
TROUTMAN SANDERS LLP
875 Third Avenue
New York, NY 10022
212-704-6000
charles.cantine@troutman.com
joseph.diamante@troutman.com

Attorneys for Plaintiff TVnGO LTD. (BVI)

CONTENTS

I. INTRODUCTION 1

II. BACKGROUND 1

III. LEGAL STANDARD 3

IV. PERSON OF ORDINARY SKILL IN THE ART 4

V. ARGUMENT 4

A. The Court Should Decline to Address LG's Indefiniteness Arguments at This Time 4

B. Proper Construction of LG's Proposed Terms 6

1. Term 1: "overlay activation criterion" 6

2. Term 2: "overlay-enabling digital data" 10

3. Term 3a/b: "Internet data source" / "Internet data input" 12

4. Term 4: "over the Internet" 13

5. Term 5a/b: "overlay activation signal" / "special overlay activation signal" 13

6. Terms 6 and 7: "combiner unit" (Term 6) and "combiner circuit" (Term 7) 16

7. Term 8: "selectively process[ing] at the user's premises [an overlay activation signal]" 27

8. Term 9: "depending on user selection at the user's premises the TV screen displays, at respective times, the TV channel video received at the first input, the overlays, and the IP material that the user has selected through the displayed overlays." 28

Term 10: "depending on the user's selection [at the user's premises] the screen image is at respective times the TV channel video with or without overlays thereon and the IP material that the user has selected through the displayed overlays." 28

Term 11: "depending on the user's selection at the user's premises, the TV screen displays, at respective times, the TV channel video received at the first input, the one or more overlays, and the IP material associated with the selected overlay and received at the second input." 28

9. Term 12: "said overlay-enabling digital data is received at the user premises according to a pre-stored user[-]profile" 29

10. Term 13: "pre-fetching and buffering said digital data stream from said website" 30

11. Term 14a: "pre-fetch IP material and store the pre-fetched material in the memory circuit" / Term 14b: "pre-fetching IP material and storing the pre-fetched IP material in a memory"31

12. Term 15: "generate the overlay activation signal through testing if specified conditions match contents of the memory circuit." 31

13. Term 16: "the overlay activation signal is generated as a function of testing if specified conditions at the user's premises match contents of the memory [circuit]" 32

14. Term 17: "periodically access[ing] a web server for downloading said overlay-enabling digital data" 32

15. Term 18: "matching material stored in the memory with IP material available at the second input" 33

16. Term 19: "the image includes an icon that indicates to the user that digital data from Internet content is currently being displayed".....33

17. Term 20: "the image contains textual information advising the user to press a particular button on the remote control unit"....34

18. Term 21: "a set top box configured to decode the TV channel video and supply decoded TV channel video to the first input of [the combiner circuit]".....34

19. Term 22: "a special overlay activation signal from an external source timed relative to an event in the TV channel video displayed on the screen" 35

20. Term 23: "the IP material path bypasses the set top box".....35

21. Term 24: "the path through which [the combiner circuit] receives the IP material at its second input bypasses the set top box".....35

22. Term 25: "processing unit".....36

23. Term 26: "programmed processing unit" 39

VI. CONCLUSION.....40

TABLE OF AUTHORITIES

CASES

Page

All Dental Prodx LLC v. Advantage Dental Prods.,
309 F.3d 774 (Fed. Cir. 2002) 10

Apex Inc. v. Raritan Comput., Inc.,
325 F.3d 1364 (Fed. Cir. 2003) 19, 20, 21

Apple Inc. v. Motorola, Inc.,
757 F.3d 1286 (Fed. Cir. 2014) 18

Bancorp Servs., L.L.C. v. Hartford Life Ins. Co.,
359 F.3d 1367 (Fed. Cir. 2004) 10, 27

Blue Calypso, LLC v. Groupon, Inc.,
815 F.3d 1331 (Fed. Cir. 2016) 10, 27

CCS Fitness, Inc. v. Brunswick Corp.,
288 F.3d 1359 (Fed. Cir. 2002) 18

Core Wireless Licensing S.A.R.L. v. LG Elecs., Inc.,
No. 2:14-CV-0911-JRG-RSP, 2015 WL 6956722 (E.D. Tex. 2015) 21, 22

Freescale Semiconductor, Inc. v. Promos Techs., Inc.,
561 F. Supp. 2d 732 (E.D. Tex. 2008) 25

Fresenius Kabi USA, LLC v. Fera Pharm., LLC,
No. 15-cv-3654, 2016 U.S. Dist. LEXIS 128162 (D.N.J. 2016) 5

Godo Kaisha IP Bridge 1 v. TCL Commun. Tech. Holdings Ltd.,
249 F. Supp. 3d 767 (D. Del. 2017) 24, 25

Greenberg v. Ethicon Endo-Surgery, Inc.,
91 F.3d 1580 (Fed. Cir. 1996) 17, 18

In re Lukach,
58 C.C.P.A. 1233, 442 F.2d 967 (C.C.P.A. 1971) 9

Int'l Dev. LLC v. Richmond,
No. 09-2495, 2010 U.S. Dist. LEXIS 120133 (D.N.J. 2010).....5

Kewazinga Corp. v. Microsoft Corp.,
No. 1:18-cv-4500, 2019 U.S. Dist. LEXIS 126680 (S.D.N.Y. 2019).....27

LG Elecs. U.S.A., Inc. v. Whirlpool Corp.,
No. 09-5142, 2011 U.S. Dist. LEXIS 44342 (D.N.J. 2011).....5, 10

LG Elecs., Inc. v. Bizcom Elecs., Inc.,
453 F.3d 1364 (Fed. Cir. 2006), *overruled on other grounds by Quanta Computer, Inc. v. LG Elecs., Inc.*, 553 U.S. 617 (2008) 23, 24, 37

Linear Tech. Corp. v. Impala Linear Corp.,
379 F.3d 1311 (Fed. Cir. 2004) 19, 20

Linex Techs., Inc. v. Hewlett-Packard Co.,
No. C 13-159 CW, 2014 U.S. Dist. LEXIS 73320 (N.D. Cal. 2014) 22

Lockwood v. Am. Airlines, Inc.,
107 F.3d 1565 (Fed. Cir. 1997) 10

Markman v. Westview Instruments, Inc.,
517 U.S. 370 (1996).....3

Markman v. Westview Instruments, Inc.,
52 F.3d 967 (Fed Cir.), aff'd, 517 U.S. 370 (1996) 4

Mass. Inst. of Tech. v. Abacus Software,
462 F.3d 1344 (Fed. Cir. 2006) 19, 20

Merck Sharp & Dohme Corp. v. Teva Pharm. USA, Inc.,
No. 17-6921, 2019 U.S. Dist. LEXIS 33542 (D.N.J. 2019).....5

MTD Prods. Inc. v. Iancu,
No. 2017-2292, 2019 U.S. App. LEXIS 23889 (Fed. Cir. Aug. 12, 2019)...20

P3 Int'l Corp. v. Unique Prods. Mfg.,
2009 U.S. Dist. LEXIS 43751 (S.D.N.Y. 2009) 23, 39

Parthenon Unified Memory Architecture LLC v. ZTE Corp.,
No. 215-CV-00225, 2016 WL 310174, at *14 (E.D. Tex. 2016) 22

Phillips v. AWH Corp.,
415 F.3d 1303 (Fed. Cir. 2005) (en banc) 3, 4

Power Integrations, Inc. v. Fairchild Semiconductor Int'l, Inc.,
711 F.3d 1348 (Fed. Cir. 2013) 19

Power Integrations, Inc. v. Fairchild Semiconductor Int'l, Inc.,
No. C 09-5235 MMC, 2013 WL 12335807 (N.D. Cal. 2013) 25

Purdue Pharm. Products, L.P. v. Actavis Elizabeth, LLC,
Civ No. 12-5311, 2014 U.S. Dist. LEXIS 80920, 2014 WL 2624787 (D.N.J. 2014), *aff'd*, 627 F. App'x 931 (Fed. Cir. 2016) 5

Realtime Adaptive Streaming LLC v. Adobe Sys.,
No. CV 18-9344, 2019 U.S. Dist. LEXIS 125180 (C.D. Cal. 2019) 38

Realtime Data, LLC v. Rackspace US, Inc.,
No. 616-CV-00961, 2017 WL 2590195 (E.D. Tex. 2017) 23, 38

Saint Lawrence Communs. LLC v. ZTE Corp.,
No. 2:15-CV-349, 2016 U.S. Dist. LEXIS 147596 (E.D. Tex. 2016) 21

Smartflash LLC v. Apple Inc.,
77 F. Supp. 3d 535 (E.D. Tex. 2014) 38

Supernus Pharm., Inc. v. TWi Pharm., Inc.,
265 F. Supp. 3d 490 (D.N.J. 2017).....3

SyncPoint Imaging, LLC v. Nintendo of Am. Inc.,
No. 2:15-cv-00247, 2016 U.S. Dist. LEXIS 677 (E.D. Tex. 2016) 38, 39

Tech. Licensing Corp. v. Blackmagic Design Pty Ltd.,
No. C 13-05184 SBA, 2016 WL 8902602, at *13 (N.D. Cal. 2016) 22, 23

Tech. Props. v. Matsushita Elec. Indus. Co.,
514 F. Supp. 2d 916 (E.D. Tex. 2007) 39

Techno View IP, Inc. v. Facebook Techs., LLC,
No. 17-386-CFC-CJB, 2018 U.S. Dist. LEXIS 207316 (D. Del. 2018).....38

TecSec, Inc. v. Int'l Bus. Machs. Corp.,
731 F.3d 1336 (Fed. Cir. 2013) 17

TEK Glob., S.R.L. v. Sealant Sys. Int'l,
920 F.3d 777 (Fed. Cir. 2019) 17

Vitronics Corp. v. Conceptronic,
90 F.3d 1576 (Fed. Cir. 1996) 4

Waddington N. Am., Inc. v. Sabert Corp.,
No. 09-4883, 2010 U.S. Dist. LEXIS 114615 (D.N.J. 2010).....5

Williamson v. Citrix Online, LLC,
792 F.3d 1339 (Fed. Cir. 2015) 17, 36

Zeroclick v. Apple,
891 F.3d 1003 (Fed. Cir. 2018) 36

I. INTRODUCTION

Plaintiff TVnGO LTD. (BVI) ("TVnGO") asserts five patents in this case: U.S. Patent Nos. 8,132,220 ("the '220 Patent") (Ex. 1)[1]; 9,124,945 ("the '945 Patent") (Ex. 2); 9,392,339 ("the '339 Patent") (Ex. 3); 9,407,969 ("the '969 Patent") (Ex. 4); 9,794,621 ("the '621 Patent") (Ex. 5) (collectively, "the Asserted Patents"). These patents are central to the Smart TV market, and disclose and claim the basic components and functionality that form the backbone of what makes a Smart TV "smart."

LG asserts 26 terms need to be construed. TVnGO asserts that these terms need no construction, but rather should be afforded their plain and ordinary meaning. TVnGO has also, as required, proposed constructions for each term in the event the Court deems construction necessary. LG has also raised indefiniteness arguments for 8 of the 26 terms. LG's indefiniteness arguments should be deferred until summary judgment, the preferred approach in this jurisdiction.

II. BACKGROUND

The Asserted Patents relate to combining traditional television with IP material from the World Wide Web. *See* Declaration of Michael Sprenger, Ph.D. (Ex. 6) at ¶¶ 23-24, 26-30. Traditional television has been available for decades. *See*

[1] References to "Ex. __" are to Exhibits 1 through 9 concurrently filed with the Declaration of Charles E. Cantine.

Ex. 6 at ¶ 17. In the late 1990s, digital technology, such as High Definition Television standard (HDTV) became more available from cable TV and satellite TV operators. *See* Ex. 6 at ¶¶ 17-18. Starting around the same time, certain companies began to explore bringing the web browsing experience of a personal computer to the TV, essentially using a TV as a display in the place of a computer monitor. *See* Ex. 6 at ¶ 18. This presented many obstacles, including: the purchase of large and costly set-top boxes; inconvenient use of a keyboard; user interface issues; the inconvenience of having to switch between TV mode and web mode; and difficulty viewing text on the TV screen. *See* Ex. 6 at ¶¶ 18-21.

TVnGO carried out pioneering work, several years ahead of the general industry, by achieving a breakthrough in how these two sources – traditional TV and IP material from the World Wide Web – are brought together. *See* Ex. 6 at ¶¶ 23-24. In January 2005, TVnGO filed its patent application disclosing:

> the ability to merge broadcast TV signals with IP packet data at a customer site, specifically in such a manner that a conventional TV set is able to display Internet program selection data while viewing a TV broadcast program and to use the selected data to select an Internet channel, such as a movie, for display on the TV set instead of the TV broadcast program.

See, e.g., Ex. 1 at 2:9-16; Ex. 6 at ¶ 23.

TVnGO's innovative approach was a major breakthrough in combining TV and Internet material in a user-friendly manner, and was patentably distinct from approaches others were exploring at that time. *See* Ex. 6 at ¶ 24.

Starting in the late 2000s, TV manufacturers began to introduce "Smart TVs" – television sets with a user interface that allows access to streaming services and applications ("apps"). *See* Ex. 6 at ¶ 24. These apps were quickly accessible without a complicated user interface and easy to navigate – features first conceived and introduced by TVnGO. *See* Ex. 6 at ¶ 24. TVnGO's technology has been widely adopted and forms the backbone of what we now call the "Smart TV" marketplace. *See* Ex. 6 at ¶ 24. LG is just one of the many companies that have incorporated TVnGO's technologies into its Smart TV product line. *See* Ex. 6 at ¶¶ 24-25.

III. LEGAL STANDARD

"Claim construction is a question of law." *Supernus Pharm., Inc. v. TWi Pharm., Inc.*, 265 F. Supp. 3d 490, 497-98 (D.N.J. 2017) (citing *Markman v. Westview Instruments, Inc.*, 517 U.S. 370, 391 (1996)). "The Court determines the meaning of disputed claim terms as understood by one of ordinary skill in the art at the time of invention." *Supernus Pharm.*, 265 F. Supp. 3d at 497-98 (citing *Phillips v. AWH Corp.*, 415 F.3d 1303, 1312-13 (Fed. Cir. 2005) (en banc)). Claim terms should generally be given their ordinary and customary meaning to a person of skill in the art at the time of the invention. *See id.* To determine the ordinary meaning, the Court first looks to the intrinsic evidence, which includes the claims, the specification, and the prosecution history. *Id.* at 1312-17.

The starting point for claim interpretation is the claim language itself, which

can "provide substantial guidance as to the meaning of particular claim terms." *Id.* at 1314. The claims, however, "must be read in view of the specification, of which they are a part." *Markman v. Westview Instruments, Inc.*, 52 F.3d 967, 979 (Fed Cir.), aff'd, 517 U.S. 370 (1996). The specification "is the single best guide to the meaning of a disputed term." *Vitronics Corp. v. Conceptronic*, 90 F.3d 1576, 1582 (Fed. Cir. 1996). However, it is improper to import limitations from the specification into the claims. *Phillips*, 415 F.3d at 1323.

Extrinsic evidence, including "expert and inventor testimony, dictionaries, and learned treatises," may be used, but must be "considered in the context of the intrinsic evidence." *Id.* at 1317-19.

IV. PERSON OF ORDINARY SKILL IN THE ART

As explained by TVnGO's expert, Dr. Michael Sprenger, a person of ordinary skill in the art (POSA) to which the Asserted Patents are directed would have had at least a B.S. degree in electrical engineering, computer engineering, computer science, or equivalent and/or would have had at least two to three years of relevant industry experience. *See* Ex. 6 at ¶ 16.

V. ARGUMENT

A. The Court Should Decline to Address LG's Indefiniteness Arguments at This Time

LG raises indefiniteness arguments for Terms 1, 5a-b, 6, 7, 8, 25, and 26. These arguments are more properly addressed at summary judgment, as "[c]ourts in

this Circuit routinely decline to address indefiniteness arguments in claim construction because they are potentially dispositive, require a high burden of proof, and may more profitably be considered in connection with patent validity." *Fresenius Kabi USA, LLC v. Fera Pharm.*, LLC, No. 15-cv-3654, 2016 U.S. Dist. LEXIS 128162, at *27 (D.N.J. 2016); *see, e.g.*, *LG Elecs. U.S.A., Inc. v. Whirlpool Corp.*, Civil Action No. 09-5142, 2011 U.S. Dist. LEXIS 44342, at *15 n.3 (D.N.J. 2011) ("The Court defers an indefiniteness determination because its dispositive effect and high burden of proof make it more appropriate for summary judgment."); *Merck Sharp & Dohme Corp. v. Teva Pharm. USA, Inc.*, Civil Action No. 17-6921, 2019 U.S. Dist. LEXIS 33542, at *18 (D.N.J. 2019); *Purdue Pharm. Products, L.P. v. Actavis Elizabeth, LLC*, Civ No. 12-5311, 2014 U.S. Dist. LEXIS 80920, 2014 WL 2624787, at *6 (D.N.J. 2014), *aff'd*, 627 F. App'x 931 (Fed. Cir. 2016); *Waddington N. Am., Inc. v. Sabert Corp.*, Civil Action No. 09-4883, 2010 U.S. Dist. LEXIS 114615, at *5 (D.N.J. 2010); *Int'l Dev. LLC v. Richmond*, Civil Action No. 09-2495 (GEB), 2010 U.S. Dist. LEXIS 120133, at *17-19 (D.N.J. 2010).

Notably, LG has not proposed alternative constructions for those terms it argues are indefinite. As such, the Court should decline to construe these terms, affording them their plain and ordinary meaning, or alternatively adopt TVnGO's proposed constructions.

B. Proper Construction of LG's Proposed Terms

TVnGO contends that no construction is needed for any term and that all terms should therefore be given their plain and ordinary meaning. Should the Court determine that construction is needed for any term, TVnGO offers the following proposed constructions that are consistent with the intrinsic evidence and how a POSA would understand the terms in light of the intrinsic evidence.

LG's proposed constructions, on the other hand, fail to account for the context in which the terms are used in the claims as a whole, and improperly try to import limiting language that is not supported by the intrinsic evidence.

1. Term 1: "overlay activation criterion"

A POSA would understand the plain and ordinary meaning of this term to be "a condition for generating an overlay." Ex. 6 at ¶¶ 31-32. The term has a plain and ordinary meaning and clearly informs a POSA of the scope of the claim. Ex. 6 at ¶ 32. The claims themselves and the specification support this construction. Ex. 6 at ¶¶ 33-37.

There is no dispute as to the meaning of "overlay" or "criterion." In fact, LG uses both terms in its proposed "possible" construction. *See* ECF No. 56-1 at 1. As for the term "activation," TVnGO proposes it means "generating," while LG suggests it means "displaying." *Id.* In sum, while LG apparently has no problem determining the meaning of the terms when used in isolation, these same terms

somehow become indecipherable when used together. LG's position is untenable.

The claims themselves support TVnGO's construction that an overlay activation criterion is simply a "**condition for generating an overlay**." *See Vitronics*, 90 F.3d at 1582 ("we look to the words of the claims themselves, both asserted and nonasserted, to define the scope of the patented invention."). For example, the independent claims of the '220 Patent claim a method (claim 1) and TV-Internet Integration Box (claim 13) "for **generating at a user's premises an overlay** using video signals constituting a first data and overlay-enabling digital data constituting a second data…" *See* Ex. 1 at claims 1 and 13; Ex. 4 at claims 1 and 13; Ex. 6 at ¶ 33. The claims further describe that an overlay is generated upon meeting an "overlay activation criterion." *See* Exs. 1 and 4 at claim 1 ("**generating** at the user's premises a corresponding **overlay only if said activation criterion is met**"); Exs. 1 and 4 at claim 13 ("responsive to an **overlay activation criterion being met for generating a corresponding overlay**"); Ex. 3 at claims 1 and 13; Ex. 6 at ¶ 33.

The specification describes what an overlay is and describes various events and conditions (i.e., criteria) that trigger generating and displaying the overlays on a TV screen. *See* Ex. 6 at ¶ 34. For example, "**[u]pon detecting a matching event**, corresponding to received IP content that is of interest to the subscriber, the TV-Internet Integration Box 16 **overlays** the matched IP content with the current broadcast and displays the new integrated video on the subscriber's TV set 17." *See*,

e.g., Ex. 1 at 4:19-49 (e.g., "the subscriber selects what kind of IP content he wishes to receive and in respect of which program details, such as icons and/or textual data, are to be displayed together with the TV broadcast data."); Ex. 4 at 4:27-57; Ex. 3 at 4:23-53; Ex. 6 at ¶ 34. Figure 3 depicts this process, specifically illustrating the query "do **conditions match**?" to which a "yes" response triggers the invention to "**overlay** the data." *See, e.g.*, Exs. 1, 3, 4 at Figure 3; Ex. 6 at ¶ 34. These examples describe an overlay activation criterion as would be understood by a POSA. Ex. 6 at ¶ 34.

The specification further elaborates on the monitoring and matching of events that lead to generating an overlay in accordance with Figure 3 and described above. *See* Ex. 6 at ¶ 35. In particular:

> an IP content provider interfaces with the web server for creating IP content and associating therewith calendar and program data indicating dates, times and channels in respect of which the IP content is to be streamed to the customer premises. Once this is done, the web server 14 monitors events, which are triggered in known manner causing the web server 14 to extract from the database 19 pre-stored IP content for streaming over the Internet 15 to the TV-Internet Integration Box 16, where it is processed as described…

See, e.g., Ex. 1 at 4:9-18; Ex. 4 at 4:17-26; Ex. 3 at 4:13-22; Ex. 6 at ¶ 35.

The specification also notes that "[t]he second data containing display information for the icons also contains data that informs the TV-Internet Integration Box 16 on which channel or channels the associated IP content is to be streamed and at what times. The second data also specifies the web site where the IP content is

located." *See, e.g.*, Ex. 1 at 7:51-55; Ex. 4 at 7:62-66; Ex. 3 at 7:52-56; Ex. 6 at ¶ 36.

Dependent claims 9 and 20 further indicate that the overlay activation criterion can include at least "a timing information, data specifying one or more TV subscriber channels, a user command information." *See, e.g.*, Exs. 1, 4 at claims 9 and 20; Ex. 6 at ¶ 37.

In sum, the claims and the specification make clear that an "overlay activation criterion," to the extent it needs to be construed at all, simply means a "condition for generating an overlay." LG contends that this term is indefinite. While such arguments should be deferred for the reasons discussed above, the argument also fails because, as explained by Dr. Sprenger and detailed above, the meaning of this term is clear to a POSA in light of the intrinsic evidence. *See, e.g.*, Ex. 6 at ¶¶ 31-38. Additionally, LG's own arguments indicate that the term is clear as they refer to the term as "possibly" meaning "a criterion for displaying overlays." *See* ECF No. 56-1 at 1.

LG's indefiniteness argument appears premised solely on the fact that the term "overlay activation criterion" does not appear verbatim in the specification. The law is clear, however, that no such requirement exists. *See, e.g.*, *In re Lukach*, 58 C.C.P.A. 1233, 1235, 442 F.2d 967, 969 (C.C.P.A. 1971) ("the invention claimed does not have to be described in ipsis verbis"), *Lockwood v. Am. Airlines, Inc.*, 107 F.3d 1565, 1571-72 (Fed. Cir. 1997); *Blue Calypso, LLC v. Groupon, Inc.*, 815 F.3d

1331, 1345-47 (Fed. Cir. 2016); *Bancorp Servs., L.L.C. v. Hartford Life Ins. Co.*, 359 F.3d 1367, 1372 (Fed. Cir. 2004) ("the components of the term have well-recognized meanings, which allow the reader to infer the meaning of the entire phrase with reasonable confidence."); *All Dental Prodx LLC v. Advantage Dental Prods.*, 309 F.3d 774, 779 (Fed. Cir. 2002). LG has confirmed and asserted this view in its own previous arguments in another case (*Whirlpool*):

> Nor does it matter that the patentees used the term 'line' in the '475 claims while the specification refers to these same structures as 'tubes.' '[T]he statute does not require an inventor to use the exact same words in both the specification and the claims.' *SDS USA, Inc. v. Ken Specialties, Inc.*, 107 F. Supp. 2d 574, 579-80 (D.N.J. 2000) (finding that 'other courts have rejected the indefiniteness defense, 'even though the precise words used in the patent's specification are not necessarily used in the [patent's] claims'') (citations omitted); *see also Curtiss-Wright Flow Control Corp. v. Velan, Inc.*, 438 F.3d 1374, 1380 (Fed. Cir. 2006) ('[C]laim drafters can also use different terms to define the exact same subject matter. Indeed this court has acknowledged that two claims with different terminology can define the exact same subject matter.').

LG Electronics, Inc. and LG Electronics U.S.A., Inc.'s Responding *Markman* Brief, *LG Elecs. U.S.A., Inc. v. Whirlpool Corp.*, No. 09-cv-5142, ECF No. 90-1 (D.N.J. March 4, 2011).

2. <u>Term 2: "overlay-enabling digital data"</u>

A POSA would understand this term to be defined by the context in which the term is used in the claims themselves. *See, e.g.*, Exs. 1, 4 at Claims 1 and 13; Ex. 6 at ¶¶ 39-40.

The preamble of claim 1 (by way of example) discloses: "A method for generating at a user's premises an overlay using video signals constituting a first data and **overlay-enabling digital data constituting a second data**…" Ex. 1 at claim 1; Ex. 6 at ¶ 40. The claims themselves inform a POSA of what the overlay-enabling digital data includes. *See* Ex. 6 at ¶ 40. Namely, claim 1 continues that the overlay-enabling digital data includes at least:

- a Web link indicating a website where content that is associated with said overlay enabling digital data is stored,
- an image indicative of the content associated with said overlay-enabling digital data, and
- an overlay activation criterion.

See Exs. 1, 4 at claims 1 and 13; Ex. 6 at ¶ 40. As shown, the claims themselves recite precisely what is meant by the term overlay-enabling digital data, and this would be readily understood by a POSA. *See* Ex. 6 at ¶ 41.

The specification also describes with specificity the meaning of the term. *See* Ex. 6 at ¶¶ 42-43. The specification notes that the "second data [i.e., the overlay-enabling digital data] containing display information for the icons also contains data that informs the TV-Internet Integration Box 16 on which channel or channels the associated IP content is to be streamed and at what times. The second data also specifies the web site where the IP content is located." *See, e.g.*, Ex. 1 at 7:51-55;

Ex. 4 at 7:62-66; Ex. 6 at ¶ 43. The specification further provides an illustrative example of such information in Table 1 (Ex. 1 at 7:57-64; Ex. 4 at 8:1-8) and explains that:

> the second data depicted in Table 1 above shows that the icon image is contained in a file called ICON.GIF and that the IP content relating thereto is to be streamed on channels 2 and 23 at times 19:30 and 21:30, these being the start times. The end times are determined by the duration of the IP content to be streamed, which is downloaded from a web site whose name is shown in the table and is contained in the second data.

See, e.g., Ex. 1 at 7:65-8:4; Ex. 4 at 8:8-14; Ex. 6 at ¶ 43. Accordingly, the meaning of overlay-enabling digital data, or second data, would be clearly understood by a POSA. Ex. 6 at ¶ 44.

3. Term 3a/b: "Internet data source" / "Internet data input"[2]

A POSA would understand the plain and ordinary meaning of these terms to be the "input that receives IP data." *See* Ex. 6 at ¶¶ 45-46. The claim language details that the "Internet data source" or "Internet data input" is coupled to the combiner unit or combiner circuit to receive the IP data. *See* Ex. 6 at ¶¶ 47-49. This is also explained in the specification, which notes that an "Internet broadcast signal comprising IP packet data (constituting second data) is streamed from a web server 14 via the Internet 15 (constituting a digital data communications network) to a TV-Internet Integration Box 16 for display on a TV set 17 coupled thereto." *See, e.g.*,

[2] Both parties agree that these two terms should mean the same thing.

Ex. 1 at 3:34-39; Ex. 4 at 3:42-47; Ex. 6 at ¶ 50. The specification further explains how the IP data is streamed to the TV-Internet Integration Box: "the TV-Internet Integration Box 16 comprises a first input 21 for receiving first data corresponding to a TV broadcast signal, typically being a cable TV signal and **a second input 22 for receiving respective second data** corresponding to IP packet data." *See, e.g.*, Ex. 1 at 6:41-46; Ex. 4 at 6:49-54; Ex. 6 at ¶ 50. The input is also shown in Figure 5. *See, e.g.*, Ex. 1, 4 at Fig. 5; Ex. 6 at ¶ 50.

4. Term 4: "over the Internet"

A POSA would understand the plain and ordinary meaning of this term to be "via the Internet." Ex. 6 at ¶¶ 51-52. The term "Internet" itself is readily understood by a POSA. Ex. 6 at ¶ 55. This construction is clear from the specification and claims. *See, e.g.*, Ex. 1, 4 at claims 1, 4, 13; Ex. 1 at 3:34-39; Ex. 4 at 3:42-47; Ex. 6 at ¶ 53-56.

5. Term 5a/b: "overlay activation signal" / "special overlay activation signal"

A POSA would understand the plain and ordinary meaning of this term to be "a signal for generating an overlay." *See* Ex. 6 at ¶¶ 57-58. The term has a plain and ordinary meaning and clearly informs a POSA of the scope of the claim. *See* Ex. 6 at ¶ 58. This construction is clear from the specification and claims. *See* Ex. 6 at ¶ 59.

Claims 1 and 12 of the '945 patent recite a TV-Internet Integration circuit

(claim 1) or process (claim 12) "configured to combine, at a user's premises, TV channel video with Internet Protocol (IP) material **selected by the user through overlays displayed at the user's premises in response to an overlay activation signal** that the user has selected." *See, e.g.*, Ex. 2 at claims 1 and 12; Ex. 5 at claim 1 ("responding to an overlay activation signal by reading out the one or more overlays from the memory and generating display drive signals that cause the TV screen to display the one or more overlays"); Ex. 6 at ¶ 59. Therefore, the overlay activation signal allows for selection of IP material through displayed overlays. *See* Ex. 6 at ¶ 62. The claims of the '339 Patent also provide support for TVnGO's construction. *See* Ex. 6 at ¶ 60. Claim 1 for instance, explains that the combiner circuit is configured to "respond to an overlay activation signal selected by the user at the user's premises and identifying one of the displayed overlays to cause the screen to display IP format material from the IP source associated with the identified overlay." *See, e.g.*, Ex. 3 at claims 1, 15; Ex. 6 at ¶ 60. Claims 12 and 13 of the '339 Patent also elaborate on the generation of an overlay activation signal noting that this can be by "a remote control unit…configured to respond to user action to generate the overlay activation signal." *See, e.g.*, Ex. 3 at claims 12 and 13; Ex. 6 at ¶ 61.

The specification elaborates on this aspect of the invention in great detail. *See* Ex. 6 at ¶ 63. For instance, the specification describes an example of an overlay

activation signal:

> **The subscriber can respond to the overlaid data using a remote control unit**, described below with reference to FIG. 6 of the drawings, which is programmed to interact with the displayed icon or other data that is overlaid on the TV broadcast…**If the subscriber responds to the overlaid data by pressing a button on the remote control unit, the TV-Internet Integration Box 16 receives the signal from the remote control unit** and changes the priorities for use with the Picture-in-Picture (PIP) technique to display the TV broadcast in a reduced window and to show the other media, i.e., the IP content, in an enlarged window.

See, e.g., Ex. 2 at 4:58-5:7, 7:16-27, Fig. 6; Ex. 3 at 4:54-5:3, 7:11-21, Fig. 6; Ex. 5 at 4:65-5:14, 7:25-35, Fig. 6; Ex. 6 at ¶ 63. The specification describes another example involving the remote control unit for generating an overlay activation signal. *See, e.g.*, Ex. 2 at 7:28-34; Ex. 3 at 7:21-27; Ex. 5 at 7:36-42; Ex. 6 at ¶ 64.

Similarly, claims 9 and 19 of the '945 Patent recite that the TV screen displays, "at least one of the overlays in response to a special overlay activation signal **from an external source timed relative to an event in the TV channel video displayed on the screen**." *See, e.g.*, Ex. 2 at claims 9 and 19; Ex. 5 at claim 9; Ex. 6 at ¶¶ 65-67. Thus, the claims themselves identify the contours of what makes the overlay activation signal "special," i.e., it is a "specific" signal as recited in the claims. Ex. 6 at ¶ 67.

LG's own arguments indicate that the terms are clear as they refer to the terms as "possibly" meaning "a signal for displaying overlays." *See* ECF No. 56-1 at 19. Like it did for Term 1, LG contends that this term is indefinite because the exact

phrase does not appear in the specification. *Id.* As discussed earlier, this argument is without merit. *See supra* Term 1. The meaning of this term is clear to a POSA. *See* Ex. 6 at ¶¶ 58, 66.

6. Terms 6 and 7: "combiner unit" (Term 6) and "combiner circuit" (Term 7)

TVnGO contends that the terms "combiner unit" (term 6) and "combiner circuit" (term 7) do not require construction and should be given their plain and ordinary meaning, or alternatively, have the same construction – "a circuit for combining two inputs into one output" – and therefore discusses these terms together. *See* ECF No. 56-1 at 27, 30.

A POSA would understand the plain and ordinary meaning of "combiner circuit" and "combiner unit" to be "a circuit for combining two inputs into one output." *See* Ex. 6 at ¶¶ 68-69, 79-82, 87. The terms have plain and ordinary meanings and clearly inform a POSA of the scope of the claims. *Id.*

LG does not provide a construction for this term but rather asserts that it is subject to means-plus-function treatment under pre-AIA § 112, paragraph 6, and also asserts that the term is indefinite. Both arguments should be rejected. The standard for determining whether a term invokes means-plus-function treatment has been clarified by the Federal Circuit:

> The standard is whether the words of the claim are understood by persons of ordinary skill in the art to have a **sufficiently definite meaning as the name for structure**. When a claim term lacks the word

> 'means,' the presumption can be overcome and § 112, para. 6 will apply if the challenger demonstrates that the claim term fails to 'recite **sufficiently definite structure**' or else recites 'function without reciting sufficient structure for performing that function.'

Williamson v. Citrix Online, LLC, 792 F.3d 1339, 1349 (Fed. Cir. 2015) (citations omitted) (emphasis added); *TEK Glob., S.R.L. v. Sealant Sys. Int'l*, 920 F.3d 777, 786 (Fed. Cir. 2019).

None of the claims of any of the five asserted patents include the word "means," creating a presumption that means-plus-function treatment does not apply to any of the terms. *See Williamson*, 792 F.3d at 1349. Means-plus-function treatment will not apply if a POSA understands the term used to be the name for the structure that performs the function, "even if the term covers a broad class of structures and even if the term identifies structures by their function." *TecSec, Inc. v. Int'l Bus. Machs. Corp*., 731 F.3d 1336, 1347 (Fed. Cir. 2013); *see Greenberg v. Ethicon Endo-Surgery, Inc.*, 91 F.3d 1580, 1583 (Fed. Cir. 1996) ("What is important is not simply that a 'detent' or 'detent mechanism' is defined in terms of what it does, but that the term, as the name for structure, has a reasonably well understood meaning in the art.").

The term is not required to denote any specific structure or a precise physical structure in order to avoid means-plus-function treatment. *Greenberg*, 91 F.3d at 1583. ("It is true that the term 'detent' does not call to mind a single well-defined structure, but the same could be said of other commonplace structural terms such as

'clamp' or 'container.'"); *CCS Fitness, Inc. v. Brunswick Corp.*, 288 F.3d 1359, 1370 (Fed. Cir. 2002) ("a term need not connote a precise physical structure in order to avoid the ambit of" § 112, paragraph 6). What is important is whether the term used is one that is understood to describe structure, although it might not bring to mind any particular structure. That is precisely the case here: a POSA having considered the claims would clearly understand that the combiner circuit and combiner unit connote structure. *See* Ex. 6 at ¶¶ 85-87.

The claims do not recite a combiner circuit/unit in a vacuum, but rather provide detailed structural components of the combiner. *See* Ex. 6 at ¶¶ 70, 75-77, 85, 87. Specifically, the claims recite that the combiner circuit includes "a first input for receiving the TV channel video, a second input for receiving the IP material, and an output for outputting display drive signals to the TV screen," thus further providing the necessary structure to avoid means-plus-function treatment. *See, e.g.*, Ex. 2 at claim 1; Ex. 3 at claims 1, 13, 14; Ex. 6 at ¶¶ 85-87. "Structure may also be provided by describing the claim limitation's operation, such as its input, output, or connections." *Apple Inc. v. Motorola, Inc.*, 757 F.3d 1286, 1299 (Fed. Cir. 2014) ("The limitation's operation is more than just its function; it is how the function is achieved in the context of the invention. For example, in *Linear*, we found that the claim term 'circuit' has a known structural definition and that the patent described the circuit's operation, including its input, output, and objective. 379 F.3d at 1320-

21.”). The specification also clearly sets forth the inputs, outputs, and objectives of the combiner circuit. *See* Ex. 6 at ¶ 84, 87.

LG alleges that “combiner circuit” is a means-plus-function term but cannot show that “circuit” does not connote sufficient structure. The Federal Circuit has consistently held that the term “circuit” by itself, or combined with a description of the circuit, connotes sufficient structure to avoid means-plus-function treatment. “Several courts have determined that the term ‘circuit’ connotes sufficiently definite structure to those skilled in the art.” *Apex Inc. v. Raritan Comput., Inc.*, 325 F.3d 1364, 1373 n.1 (Fed. Cir. 2003) (collecting cases). “We have previously held on several occasions that the term ‘circuit’ connotes structure.” *Power Integrations, Inc. v. Fairchild Semiconductor Int’l, Inc.*, 711 F.3d 1348, 1364 (Fed. Cir. 2013) (citing *Apex Inc.*, *Linear Tech. Corp.*, and *Mass. Inst. of Tech.*, discussed below) (“A description of the circuit’s operation may provide sufficiently definite structure, as can certain ‘adjectival qualifications.’”)

The fact that the claims at issue define the circuit as a “combiner circuit” rather than just a “circuit” further supports that 112(6) does not apply. “[T]he term ‘circuit’ with an appropriate identifier such as ‘interface,’ ‘programming’ and ‘logic,’ certainly identifies some structural meaning to one of ordinary skill in the art.” *Apex*, 325 F.3d at 1372. “**[I]t is clear that the term ‘circuit,’ by itself connotes some structure**. In the absence of any more compelling evidence of the understanding of

one of ordinary skill in the art, the presumption that § 112, P 6 does not apply is determinative." *Id.*; *see Linear Tech. Corp. v. Impala Linear Corp.*, 379 F.3d 1311, 1320 (Fed. Cir. 2004) ("when the **structure-connoting term 'circuit'** is coupled with a description of the circuit's operation, sufficient structural meaning generally will be conveyed to persons of ordinary skill in the art, and § 112 ¶ 6 presumptively will not apply."); *Mass. Inst. of Tech. v. Abacus Software*, 462 F.3d 1344, 1356 (Fed. Cir. 2006) ("The claim language here too does not merely describe a circuit; it adds further structure by describing the operation of the circuit. . . . This description of the operation of the circuit is sufficient to avoid 112 P6.").

The Federal Circuit itself has defined circuit to mean "the combination of a number of electrical devices and conductors that, when interconnected to form a conducting path, fulfill some desired function." *Apex*, 325 F.3d at 1372 (quoting Dictionary of Computing, 75 (4th ed. 1996)). Importantly, the Federal Circuit has recently confirmed its view that "circuit," particularly with a preceding identifier, connotes structure. *See MTD Prods. Inc. v. Iancu*, No. 2017-2292, 2019 U.S. App. LEXIS 23889, at *11 (Fed. Cir. Aug. 12, 2019) ("Based on a dictionary definition of the word 'circuit,' the court reasoned that 'the term 'circuit' by itself connotes some structure,' and that 'the term 'circuit with an appropriate identifier…certainly identifies some structural meaning to one of ordinary skill in the art.") (citing *Apex*).

This is not the first case in which LG (as defendant) has made this argument.

LG's arguments were rejected then for the same reasons they should be rejected here. *See Core Wireless Licensing S.A.R.L. v. LG Elecs., Inc.*, No. 2:14-CV-0911-JRG-RSP, 2015 WL 6956722, at *18 (E.D. Tex. 2015) (despite LG's arguments to the contrary, declining to construe the term "circuitry" and holding it should be given its plain and ordinary meaning) ("Though Defendants [LG] provide attorney argument that 'circuitry' is a nonce word, Defendants have not pointed to persuasive evidence that the term 'circuitry' does not connote structure to one skilled in the art."). It is also clear that LG understands the term "circuit" to connote sufficient structure as they have not requested means-plus-function treatment of the term "memory circuit" as used elsewhere in the claims. *See, e.g.*, Ex. 2 at Claims 1, 4, 5, 6, 12, 15, and 17; Ex. 3 at Claim 1.

District courts have followed the Federal Circuit's lead when construing "combiner circuit." *See, e.g., Saint Lawrence Communs. LLC v. ZTE Corp.*, No. 2:15-CV-349, 2016 U.S. Dist. LEXIS 147596, at *131-33 (E.D. Tex. 2016) (rejecting the argument that the term "circuit" was a means-plus-function term and construing "combiner circuit for combining said pitch codevector and said innovative codevector filtered by said innovation filter to thereby produce said periodicity enhanced excitation signal" and "combiner circuit for combining said pitch codevector and [said] innovative codevector to thereby produce an excitation signal" to have their plain meaning).

Even when means-plus-function is not an issue, the term "combiner circuit" has been found to be readily understood in the art:

> The function of the 'combining' term itself is to aggregate different data signals. The rest of the claim language elaborates on what exactly is to be combined . . . . A definition of 'combining' as 'aggregating' adequately describes the process. . . . The Court has already construed 'combining.' These terms do not require any further construction because the function of the combiner circuits is described by the claim language that follows — the combiner circuit combines the received data symbols transmitted in signals with the same code, which are received by different receiving antennas.

Linex Techs., Inc. v. Hewlett-Packard Co., No. C 13-159 CW, 2014 U.S. Dist. LEXIS 73320, at *25-30 (N.D. Cal. 2014).

As in LG's *Core Wireless* case, the term "circuit" by itself and with preceding terms has regularly been afforded its plain and ordinary meaning with no construction necessary. *See, e.g.*, *Parthenon Unified Memory Architecture LLC v. ZTE Corp.*, No. 215-CV-00225, 2016 WL 310174, at *14 (E.D. Tex. 2016) (construing "control circuit" to have its plain and ordinary meaning). Such "circuit" terms have been found to not invoke "means-plus-function" treatment. *See, e.g.*, *Tech. Licensing Corp. v. Blackmagic Design Pty Ltd.*, No. C 13-05184 SBA, 2016 WL 8902602, at *13 (N.D. Cal. 2016) (determining that the term "fill calculator circuit" was not a means-plus-function limitation as the claim "provides a description of the circuit's operation, such that it appears to convey sufficient structural meaning to one of ordinary skill in the art. Specifically, the claim describes

how the fill calculator circuit 'interacts with other components' of the apparatus, i.e., the neighboring circuit, to perform the stated function."); *Realtime Data, LLC v. Rackspace US, Inc.*, No. 616-CV-00961, 2017 WL 2590195, at *15 (E.D. Tex. 2017) (determining that the term "circuit" was not governed by § 112, ¶ 6, and that no construction was necessary); *P3 Int'l Corp. v. Unique Prods. Mfg.*, 2009 U.S. Dist. LEXIS 43751, at *22 (S.D.N.Y. 2009) (determining "control circuit" was not subject to means-plus-function treatment).

As with combiner circuit, LG does not provide a construction for the combiner unit term but rather asserts that it is subject to means-plus-function treatment under pre-AIA § 112, paragraph 6, and also asserts that the term is indefinite. Once again, both arguments should be rejected. LG itself has previously relied on the standard described above to (correctly) avoid means-plus-function treatment of a "unit" claim term. *See LG Elecs., Inc. v. Bizcom Elecs., Inc.*, 453 F.3d 1364, 1373 (Fed. Cir. 2006), *overruled on other grounds by Quanta Computer, Inc. v. LG Elecs., Inc.*, 553 U.S. 617 (2008) (in which LG contended that a "claim term that does not use 'means' will trigger the rebuttable presumption that § 112 AP 6 does not apply. This presumption can be rebutted 'by showing that the claim element recite[s] a function without reciting sufficient structure for performing that function.'"). In LG's *Bizcom* case, the Federal Circuit noted that the term "control unit" did not use the word "means" and agreed with LG that the presumption against means-plus-function

treatment was **not** overcome as the "claim itself provides sufficient structure, namely 'a CPU and a partitioned memory system,' for performing the stated function, 'controlling the communication unit.'" *Id.*

Here, a POSA would understand the term combiner unit, as used in the claims, to have sufficient structure. *See* Ex. 6 at ¶¶ 70, 75-77. A POSA would understand that the "unit" of the patented invention is a circuit and would understand the term "combiner" to be identifying the circuit by its operation. Ex. 6 at ¶ 82. As elaborated above, the term "circuit" with an identifier is sufficient structure. The claims and specification describe the inputs, outputs, and objective of the component, which thus inform a POSA of its structure. *See* Ex. 6 at ¶ 70-77.

Courts have construed the term "unit" with a preceding identifying term to include circuits. *See, e.g.*, *Godo Kaisha IP Bridge 1 v. TCL Commun. Tech. Holdings Ltd.*, 249 F. Supp. 3d 767, 777 (D. Del. 2017) (construing the term "arranging **unit**" to mean "**circuitry** or a combination of circuitry and software that operates to insert signals into symbols of a CQI transmission slot"); *Power Integrations, Inc. v. Fairchild Semiconductor Int'l, Inc.*, No. C 09-5235 MMC, 2013 WL 12335807, at *2 (N.D. Cal. 2013) (determining that the term "sample **unit**" was not subject to construction under 35 U.S.C. § 112, ¶ 6 and construing the term to mean "**circuitry** for sampling the reflected voltage."); *Freescale Semiconductor, Inc. v. Promos Techs., Inc.*, 561 F. Supp. 2d 732, 744 (E.D. Tex. 2008) (construing "data **unit**" to

mean "**circuitry** that stores or otherwise processes data.").

The claim language itself and the specification describe the inputs and output associated with the "combiner unit." *See* Ex. 6 at ¶ 70-77; *see Godo Kaisha IP Bridge 1*, 249 F. Supp. 3d at 777 ("The claim language itself provides sufficiently definite structure for 'an arranging unit' by describing the claim limitation's operation, such as its input, output, or connections. The specification, with reference to figures [], also demonstrates the input, output, or connections associated with the 'arranging unit.'") (quotations omitted).

The term "combiner" on its own has also been readily understood in the art as structural. *See* Ex. 6 at ¶ 78. This is also confirmed by LG's expert, Mr. Leo Hoarty's own patent. For instance, U.S. Patent No. 6,205,582 ("the Hoarty Patent") issued on March 20, 2001, and refers to several "combiners" within the patent. *See* Ex. 6 at ¶ 78. Specifically, the Hoarty Patent specification notes that "all signals going to a particular service area are combined via switcher-combiner 304." Ex. 7 at TVNGO_0002389, 5:31-32; Ex. 6 at ¶ 78. The Hoarty Patent also describes "[t]he outputs of the low pass filter 406 and the impairment removal circuit 417 are re-combined at combiner 407…" *Id.* at TVNGO_0002391, 8:67-9:2; Ex. 6 at ¶ 78. Figure 6 also shows several combiners 304 and 307. *Id.* at TVNGO_0002390; Ex. 6 at ¶ 78. The Hoarty Patent does not provide additional information regarding the combiners as the term is understood in the art to refer to electronics/electrical devices

used for combining inputs, such as signals. *See* Ex. 6 at ¶ 78.

A POSA would understand the term combiner circuit as used in the claims of the '945 Patent, '339 Patent, '969 Patent, and '621 Patent to be the same as the combiner unit described in the specifications of all the Asserted Patents. *See* Ex. 6 at ¶ 82. The use of the term "unit" in the specification and "circuit" in the claims would be readily understood to be interchangeable by a POSA. *See* Ex. 6 at ¶ 82. Notably, the PTO considered the two terms to be interchangeable. *See* Ex. 9, 4/16/2015 Office Action for U.S. Appl. No. 13/336,189 (the examiner only objected to use of the term combiner unit, and proposed that the claims should be amended to recite "combiner circuit" as recited elsewhere in the claims; no substantive rejections were raised regarding this change in terminology); Ex. 6 at ¶ 83.

It is clear that the "combiner unit" of the specification is a circuit, and thus clear that the "combiner unit" of the specifications is the same as the "combiner circuit" described in the claims. Ex. 6 at ¶ 75. Similar to discussed above for Term 1, if the context of the specification demonstrates that certain terms were meant to be used similarly (e.g., "combiner circuit" and "combiner unit") and a POSA would infer the same meaning, then use of different terms to mean the same thing is appropriate. *See, e.g.*, *Blue Calypso*, 815 F.3d at 1345-47; *Bancorp Servs*, 359 F.3d at 1372. Here, a POSA would not be confused or uncertain as to the scope of the invention due to use of the terms "combiner unit" in the specification and "combiner

circuit" in the claims. *See* Ex. 6 at ¶ 82; *see also Kewazinga Corp. v. Microsoft Corp.*, No. 1:18-cv-4500, 2019 U.S. Dist. LEXIS 126680, at *68-69 (S.D.N.Y. 2019) (claims found not indefinite with inconsistent use of the terms "device" and "system" in the claims).

7. Term 8: "selectively process[ing] at the user's premises [an overlay activation signal]"

A POSA would understand the plain and ordinary meaning of this term to be "process[ing] at the user's premises a specific signal for generating an overlay." Ex. 6 at ¶¶ 89-90. The term has a plain and ordinary meaning and clearly informs a POSA of the scope of the claim. Ex. 6 at ¶ 90. Claim 1 of the '945 patent recites that the invention includes a "combiner circuit being configured to selectively generate display drive signals causing the TV screen to display the TV channel video received at the first input and, further, to **selectively process at the user's premises an overlay activation signal**." Ex. 2 at claim 1; Ex. 6 at ¶ 92. Dependent claims 8 and 21 provide that in at least some embodiments, the selective processing of the overlay activation signal is "per input from the user." *See, e.g.*, Ex. 2 at claims 8 and 21; Ex. 5 at claim 11; Ex. 6 at ¶ 93. The specification further elaborates on selective processing performed by the combiner circuit noting that it can be done by itself or in combination with the processing unit. *See, e.g.*, Ex. 2 at 7:1-15; Ex. 5 at 7:11-24; Ex. 6 at ¶¶ 94-96.

8. Term 9: "depending on user selection at the user's premises the TV screen displays, at respective times, the TV channel video received at the first input, the overlays, and the IP material that the user has selected through the displayed overlays."

Term 10: "depending on the user's selection [at the user's premises] the screen image is at respective times the TV channel video with or without overlays thereon and the IP material that the user has selected through the displayed overlays."

Term 11: "depending on the user's selection at the user's premises, the TV screen displays, at respective times, the TV channel video received at the first input, the one or more overlays, and the IP material associated with the selected overlay and received at the second input."

A POSA would understand the plain and ordinary meaning of these terms. *See, e.g.*, Ex. 6 at ¶¶ 97-98, 104-105, 109-110. The "preamble" to each means the same, namely, that depending on a selection made by the user at the user's premises, the TV screen can display different things. *Id.* In Term 9, it can display "the TV channel video received at the first input, the overlays, or the IP data associated with an overlay" (Ex. 2 at claims 1 and 12), in Term 10 it displays "the TV channel video with or without overlays thereon and the IP material that the user has selected through the displayed overlays" (Ex. 3 at claims 1 or 15), and in Term 11 it displays "the TV channel video received at the first input, the one or more overlays, and the IP material associated with the selected overlay and received at the second input" (Ex. 5 at claim 1); Ex. 6 at ¶¶ 99, 107, 111.

Putting aside the other errors in LG's proposal, LG suggests that all three

terms mean the exact same thing, despite the fact that the terms, and in particular, Terms 9 and 10, clearly contemplate different embodiments. TVnGO's proposed construction, on the other hand, addresses the specific language used in the claims. The claim language is clear as to what the TV screen displays pursuant to the user's selection and in accordance with the invention and a POSA would understand the various display options that are possible based on the invention. *See, e.g.*, Ex. 2 at claims 1, 2, 3, 12, 13, 14; Ex. 3 at claims 1, 6, 7, and 15; Ex. 5 at claim 1; Ex. 6 at ¶¶ 99, 107, 111. TVnGO's alternative proposed construction clarifies the claim language while keeping the appropriate limitations. *Id.* These claim terms outline just some of the possible TV screen display options of, e.g., claims 1 and 12 of the '945 patent, which include a variety of other examples. Ex. 6 at ¶¶ 100-101. Some of these examples are shown in Figures 7a, 7b, and 7c, and described in the specifications. *See* Ex. 2, Ex. 3, and Ex. 5 at Figs. 7a, 7b, 7c; Ex. 2 at 7:16-61; Ex. 3 at 7:11-51; Ex. 5 at 7:25-67; Ex. 6 at ¶ 102-103. Put another way, the claims are not limited to the examples shown in Figures 7a-7c, as LG suggests, but rather contemplate other embodiments. A POSA would not understand the embodiments shown in Figures 7a-7c to be the only embodiments of the invention encompassed by the claims. Ex. 6 at ¶¶ 103, 108, 112.

9. Term 12: "said overlay-enabling digital data is received at the user premises according to a pre-stored user[-]profile"

A POSA would understand the plain and ordinary meaning of this term to be

that the overlay-enabling digital data, as defined above in Term 2, "is received at the user premises based on information associated with an existing user profile." Ex. 6 at ¶¶ 113-114. The specification describes that "[t]he IP packet data [i.e., the overlay-enabling digital data] may optionally be **associated with predefined user-profiles that are also stored** in the database 19 so that the advertisement or other IP data is sent only to specific TV-Internet Integration Boxes. Ex. 6 at ¶ 115. Such user-profiles **may be configured by the advertiser or by the user**." *See, e.g.*, Ex. 6 at ¶ 115. Various configurations and data that may be contained in a user profile include, e.g., data that refines the target audience, categories of TV programs, geographical data, or language data. *See, e.g.*, Ex. 1 at 6:25-39; Ex. 6 at ¶ 115. As a POSA would readily understand, the overlay-enabling digital data is received at the user's premises based on information associated with such a profile. *See, e.g.*, Ex. 1 at 6:6-15, 6:46-49; Ex. 4 at 6:14-23, 6:54-57; Ex. 6 at ¶ 115.

10. Term 13: "pre-fetching and buffering said digital data stream from said website"

A POSA would understand the plain and ordinary meaning of this term to be "acquiring and temporarily storing the digital data anticipated to be used from the website." Ex. 6 at ¶¶ 116-117. A POSA would understand "pre-fetching" data to include acquiring data in anticipation of using the data, and would understand "buffering" data to mean temporarily storing the data. The specification is consistent with this understanding of these terms. *See, e.g.*, Ex. 1 at 8:5-39, Fig. 8; Ex. 4 at

8:16-51, Fig. 8; Ex. 6 at ¶ 118.

11. Term 14a: "pre-fetch IP material and store the pre-fetched material in the memory circuit" / Term 14b: "pre-fetching IP material and storing the pre-fetched IP material in a memory"

A POSA would understand the plain and ordinary meaning of pre-fetching and storing IP material as used in the terms to mean "acquire IP data anticipated to be used and store the IP data." Ex. 6 at ¶¶ 119-120, 122-123. A POSA would understand the term "pre-fetch" to include acquiring in anticipation of using. The specification is consistent with this understanding of the terms. *See, e.g.*, Ex. 2 at 8:16-50, Fig. 8; Ex. 5 at 8:23-58, Fig. 8; Ex. 6 at ¶ 121, 124.

The only difference between Terms 14a and 14b is that in Term 14a the pre-fetched IP material is stored in "the memory circuit," while in Term 14b it is stored in "a memory." This distinction would be readily apparent to a POSA. Ex. 6 at ¶¶ 120, 123.

12. Term 15: "generate the overlay activation signal through testing if specified conditions match contents of the memory circuit."

A POSA would understand the plain and ordinary meaning of this term to be "generate the signal for generating an overlay by comparing if given conditions are equal to contents of the memory circuit." Ex. 6 at ¶ 125-126. The claims and specification support and are consistent with this proposed construction. *See, e.g.*, Ex. 2 at 4:27-57; 7:1-15, Figs. 3, 5, 8; Ex. 6 at ¶ 128.

13. Term 16: "the overlay activation signal is generated as a function of testing if specified conditions at the user's premises match contents of the memory [circuit]"

A POSA would understand the plain and ordinary meaning of this term to be "the signal for generating an overlay is generated by comparing given conditions at the user's premises with contents of the memory [circuit]." Ex. 6 at ¶ 129-130. As explained above for Term 15, the claims and specification support and are consistent with this proposed construction. *See, e.g.*, Ex. 2 at 4:27-57; 7:1-15; Figs. 3, 5, 8; Ex. 5 at 4:34-64, 7:11-24, Figs. 3, 5, 8; Ex. 6 at ¶ 131.

14. Term 17: "periodically access[ing] a web server for downloading said overlay-enabling digital data"

A POSA would understand the plain and ordinary meaning of this term to be "periodically access[ing] a web server for downloading" the overlay-enabling digital data, as defined above in Term 2. Ex. 6 at ¶ 132-133. The specification describes this "periodic[] access" without specifically limiting it to "a regular time interval" as proposed by LG. *See, e.g.*, Ex. 1 at 8:5-13 ("In accordance with one embodiment, the processing unit 25 is programmed to access the web server 14 periodically and download current program data."); Ex. 6 at ¶ 134. An example is provided wherein "once every 2 to 3 hours the TV-Internet Integration Box 16 may automatically access the web server 14 to download the second data," (*id.*) however the specification also notes that such periodic access occurs in instances such as pre-fetching. *See, e.g.*, Ex. 1 at 8:25-30 ("FIG. 8 is a flow diagram showing the principal

actions carried out by the TV-Internet Integration Box when pre-fetching a digital broadcast signal. Thus, the TV-Internet Integration Box 16 periodically accesses the web server 14 and downloads current program data, constituting the second data."); Ex. 6 at ¶ 134. Extrinsic evidence, such as the dictionary definition of the term "periodically," is consistent with TVnGO's proposed construction. *See, e.g.*, Ex. 9, LG00007368 (defining "periodically" as "from time to time"); Ex. 6 at ¶ 135.

15. Term 18: "matching material stored in the memory with IP material available at the second input"

A POSA would understand the plain and ordinary meaning of this term to be "comparing data stored in the memory with IP data accessible at the second input." Ex. 6 at ¶ 136-137. As described above for Terms 15 and 16, the specification and figures provide details regarding the matching process. Ex. 6 at ¶ 138.

16. Term 19: "the image includes an icon that indicates to the user that digital data from Internet content is currently being displayed"

A POSA would understand the plain and ordinary meaning of this term to be "the image includes an icon indicating that IP data is currently being displayed." Ex. 6 at ¶ 139-140. TVnGO's proposed construction is consistent with the language of the claims and specification, which is already understandable to a POSA. Ex. 6 at ¶ 141.

17. Term 20: "the image contains textual information advising the user to press a particular button on the remote control unit"

A POSA would understand the plain and ordinary meaning of this term to be "the image includes textual information advising the user to press a particular button on the remote control unit." Ex. 6 at ¶ 142-143. The language of the claim is clear and understandable to a POSA. Ex. 6 at ¶ 144. TVnGO's proposed construction simply clarifies the language of the claim and is supported by the specification. Ex. 6 at ¶ 144.

18. Term 21: "a set top box configured to decode the TV channel video and supply decoded TV channel video to the first input of [the combiner circuit]"

A POSA would understand the plain and ordinary meaning of this term to be "a set top box configured to decode the TV channel video and supply decoded TV channel video to the first input of" the combiner circuit as defined above in Term 7. Ex. 6 at ¶ 145-146. The specification describes an exemplary configuration utilizing a set top box with reference to Figure 1. Ex. 6 at ¶ 147. The term "decode" is understood by a POSA to mean receiving data transmitted and presented in a specific format, and converting this data into a different format. Ex. 6 at ¶ 148. This is consistent with and supported by the language of the claims which already provides details as to the form of the TV channel video. Ex. 6 at ¶ 148.

19. Term 22: "a special overlay activation signal from an external source timed relative to an event in the TV channel video displayed on the screen"

A POSA would understand the plain and ordinary meaning of this term to be "a specific signal for generating an overlay from an external source timed relative to an event in the TV channel video displayed on the screen." Ex. 6 at ¶ 149-150. For the reasons explained above for Term 5, this phrase would be readily understood by a POSA. Ex. 6 at ¶ 151.

20. Term 23: "the IP material path bypasses the set top box"

A POSA would understand the plain and ordinary meaning of this term to be "the IP data path does not pass through the set top box." Ex. 6 at ¶ 152-153. A POSA would understand the term "bypass" to mean "does not pass through" as noted in TVnGO's proposed construction. Ex. 6 at ¶ 154. The claims support this configuration. *See, e.g.*, Ex. 2 at claims 1, 7, 11, 12, 18, and 22; Ex. 6 at ¶ 154. This is also supported by the specification and figures. *See, e.g.*, Ex. 2 at 3:39-64; Fig. 1; Ex. 6 at ¶ 155.

21. Term 24: "the path through which [the combiner circuit] receives the IP material at its second input bypasses the set top box"

A POSA would understand the plain and ordinary meaning of this term to be "the path through which [the combiner circuit] receives the IP data at its second input does not pass through the set top box" where the combiner circuit is as defined above in Term 7. Ex. 6 at ¶ 156-157. As described for the above term, a POSA would

understand the term "bypass" to mean "does not pass through." Ex. 6 at ¶ 158. The claims, specification, and figures support this configuration and construction. *See, e.g.*, Ex. 3 at claim 1; 3:35-60, Fig. 1; Ex. 6 at ¶ 158.

22. <u>Term 25: "processing unit"</u>

The term "processing unit" should not be found to be subject to 35 U.S.C. 112 ¶ 6, and should instead be found to require no construction, or construed to have its plain and ordinary meaning of "a circuit that processes data according to programmed instructions." Ex. 6 at ¶ 159-160. Claim 16 of the '220 and '969 Patents do not use the word "means." "Presumptively, therefore, § 112, ¶ 6 does not apply to the limitations." *Zeroclick v. Apple*, 891 F.3d 1003, 1007 (Fed. Cir. 2018); *see Williamson*, 792 F.3d at 1348.

Here, a POSA would understand the meaning of the term "processing unit" to connote a specific structure. *See* Ex. 6 at ¶ 162, 169-170. As explained by Dr. Sprenger, a "processing unit" is a circuit that processes data according to programmed instructions. *See* Ex. 6 at ¶ 160. The claims of the '220 and '969 Patent recite certain of the objectives of the processing unit. *See* Ex. 6 at ¶ 161. Claim 16 recites that the processing unit is for "pre-fetching and buffering said digital data stream from said website," where the digital data stream was received by the receiver recited in Claim 16. See Ex. 1 at Claim 16; Ex. 4 at Claim 16. The claim further recites that the "processing unit" thereby allows "said digital data stream to be

displayed substantially without delay upon redirection by the user." A POSA would understand the structural arrangements of the "processing unit" based on the recited inputs, outputs, and objectives of the claim, and would understand that the "processing unit" has, for example, structural arrangements for "pre-fetching and buffering said digital data stream from said website" which allows "said digital data stream to be displayed substantially without delay." *See* Ex. 6 at ¶ 162.

The specification provides additional details regarding the structure of the processing unit of the claims. *See* Ex. 6 at ¶ 163-168. And, as detailed above for the term combiner unit, LG itself has previously argued that the term "unit" does not invoke means-plus-function treatment. *See LG Elecs., Inc. v. Bizcom Elecs., Inc.*, 453 F.3d at 1373 (the Federal Circuit agreed with LG that the presumption against means-plus-function treatment was **not** overcome for a "unit" term as the "claim itself provides sufficient structure" where that structure was "a CPU [central **processing unit**] and a partitioned memory system" for performing the stated function.)

The comparable term "processor" has also repeatedly been found by courts to connote specific structure to avoid means-plus-function treatment. *See* Ex. 6 at 171; *see, e.g.*, *Realtime Data*, 2017 U.S. Dist. LEXIS 92131, at *47. "And for the most part, courts have ultimately concluded that 'processor' terms failed to invoke Section 112, paragraph 6." *Techno View IP, Inc. v. Facebook Techs.*, LLC, No. 17-386-CFC-

CJB, 2018 U.S. Dist. LEXIS 207316, at 12 (D. Del. 2018) (collecting cases) ("It has been observed that 'in many instances, the term 'processor' itself connotes sufficient structure and is not a 'nonce' or 'functional' word that is subject to the limitations of' Section 112, paragraph 6."); *see also SyncPoint Imaging, LLC v. Nintendo of Am. Inc.*, No. 2:15-cv-00247, 2016 U.S. Dist. LEXIS 677, at *57 (E.D. Tex. 2016) ("The Court noted that like 'detector' and 'circuit,' 'processor,' while it 'may not define a specific structure, [] describes a class of structures.' (citing *Smartflash LLC v. Apple Inc.*, 77 F. Supp. 3d 535 (E.D. Tex. Dec. 4, 2014))); *Realtime Adaptive Streaming LLC v. Adobe Sys.*, No. CV 18-9344, 2019 U.S. Dist. LEXIS 125180, at *47 (C.D. Cal. 2019) (finding the term "processor" not subject to 35 U.S.C. § 112, ¶ 6, and declining to construe the term).

The term "central processing unit" has also been regularly understood by courts to include circuits implementing programmed instructions. *See, e.g.*, *Tech. Props. v. Matsushita Elec. Indus. Co.*, 514 F. Supp. 2d 916, 925 (E.D. Tex. 2007) (construing "central processing unit" to have a plain and ordinary meaning of "an electronic circuit on an integrated circuit that controls the interpretation and execution of programmed instructions" and construing "microprocessor" to mean "an electronic circuit that interprets and executes programmed instructions."); *P3 Int'l Corp. v. Unique Prods. Mfg.*, 2009 U.S. Dist. LEXIS 43751, at *25 (S.D.N.Y. May 21, 2009) (construing the term "central processing unit" to mean "an electronic

circuit that executes computer programs.”).

LG argues that the term processing unit is indefinite. LG therefore has the burden of proving indefiniteness by clear and convincing evidence. *See, e.g.*, *SyncPoint*, 2016 U.S. Dist. LEXIS 677, at *54-55 (E.D. Tex. 2016) (finding that “processor” “connotes sufficiently definite structure to one of ordinary skill in the art” such that 112 ¶ 6 not apply, and determining that “because Defendants’ indefiniteness argument is premised on the application of § 112, P 6, Defendants have failed to establish by clear and convincing evidence that this term is indefinite and renders any claim invalid.”). Because of the heavy burden in proving indefiniteness, as explained above, LG’s indefiniteness arguments should be rejected at this stage of the litigation and the Court should decline to construe this term, or alternatively adopt TVnGO’s construction.

23. <u>Term 26: “programmed processing unit”</u>

As described above, courts have understood “processing unit” terms to include circuits implementing programmed instructions. Accordingly, the term “programmed processing unit” should not be treated as a means-plus-function term and should be construed to have its plain and ordinary meaning for the reasons described above with respect to the term “processing unit.” *See* Ex. 6 at ¶ 172-173.

As Dr. Sprenger describes, Claim 14 of the ’339 Patent provides information regarding the structure of the “programmed processing unit.” *See* Ex. 6 at ¶ 174. In

particular, the claims and specification provide information regarding the input and output of the "programmed processing unit," as well as its functions or objectives. *See* Ex. 6 at ¶ 174-177.

VI. CONCLUSION

For the foregoing reasons, TVnGO respectfully requests that the Court construe the disputed claim terms, to the extent the Court determines they require construction, as proposed by TVnGO.

Date: September 23, 2019

/s/ Charles E. Cantine

Matthew T. Eyet, Esq.
NJ Supreme Court I.D. No. 018872010
SANDELANDS EYET LLP
1545 U.S. Highway 206, Suite 304
Bedminster, NJ 07921
meyet@se-llp.com
908-470-1200

Charles E. Cantine, Esq. (*pro pac vice*)
Joseph Diamante, Esq. (*pro hac vice*)
TROUTMAN SANDERS LLP
875 Third Avenue
New York, NY 10022
212-704-6000
charles.cantine@troutman.com
joseph.diamante@troutman.com

Attorneys for Plaintiff TVnGO LTD. (BVI)

IN THE UNITED STATES DISTRICT COURT
FOR THE DISTRICT OF NEW JERSEY

TVnGO LTD. (BVI), Plaintiff, v. LG ELECTRONICS INC. and LG ELECTRONICS U.S.A., INC., Defendants.	Civil Action No. 1:18-cv-10238-RMB-KMW

DECLARATION OF CHARLES E. CANTINE IN SUPPORT OF PLAINTIFF TVnGO'S OPENING CLAIM CONSTRUCTION

I, Charles E. Cantine, hereby declare as follows:

1. I am an attorney at the law firm of Troutman Sanders LLP and counsel of record for Plaintiff TVnGO LTD. (BVI) ("TVnGO") in the above-captioned action.

2. I make this declaration in Support of Plaintiff TVnGO's Opening Claim Construction Brief.

3. The statements in this declaration are true and correct. If called upon to testify, I could and would testify to the facts set forth below.

4. Attached hereto as **Exhibit 1** is a true and correct copy of United States Patent No. 8,132,220.

5. Attached hereto as **Exhibit 2** is a true and correct copy of United States Patent No. 9,124,945.

6. Attached hereto as **Exhibit 3** is a true and correct copy of United States Patent No. 9,392,339.

7. Attached hereto as **Exhibit 4** is a true and correct copy of United States Patent No. 9,407,969.

8. Attached hereto as **Exhibit 5** is a true and correct copy of United States Patent No. 9,794,621

9. Attached hereto as **Exhibit 6** is a true and correct copy of the Declaration of Michael Sprenger, Ph.D. in Support of Plaintiff TVnGO's Opening Claim Construction Brief.

10. Attached hereto as **Exhibit 7** is a true and correct copy of TVNGO_0002364-2394.

11. Attached hereto as **Exhibit 8** is a true and correct copy of an excerpt of the file history of United States Patent Application No. 13/336,189.

12. Attached hereto as **Exhibit 9** is a true and correct copy of LG_00007362-7364, 7368.

I declare under penalty of perjury that the foregoing is true and correct, and that this declaration was executed in New York, New York on March 13, 2019.

s/ Charles E. Cantine
Charles E. Cantine

EXHIBIT 1

to Declaration of Charles Cantine in Support of Plaintiff TVnGO's Opening Claim Construction Brief

US008132220B2

(12) **United States Patent**
Merlin

(10) **Patent No.: US 8,132,220 B2**
(45) **Date of Patent: Mar. 6, 2012**

(54) **METHOD AND APPARATUS FOR FACILITATING TOGGLING BETWEEN INTERNET AND TV BROADCASTS**

(75) Inventor: **Yakkov Merlin**, Raanana (IL)

(73) Assignee: **Tvngo Ltd.**, Raanana (IL)

(*) Notice: Subject to any disclaimer, the term of this patent is extended or adjusted under 35 U.S.C. 154(b) by 700 days.

(21) Appl. No.: **11/794,825**

(22) PCT Filed: **Jan. 11, 2005**

(86) PCT No.: **PCT/IL2005/000035**

§ 371 (c)(1),
(2), (4) Date: **Jul. 6, 2007**

(87) PCT Pub. No.: **WO2006/075313**

PCT Pub. Date: **Jul. 20, 2006**

(65) **Prior Publication Data**

US 2008/0046942 A1 Feb. 21, 2008

(51) **Int. Cl.**
H04N 7/173 (2011.01)
G06F 3/00 (2006.01)
G09G 5/00 (2006.01)

(52) **U.S. Cl.** **725/109**; 715/717; 345/629

(58) **Field of Classification Search** ..... None
See application file for complete search history.

(56) **References Cited**

U.S. PATENT DOCUMENTS

6,130,898	A	10/2000	Kostreski et al.	
6,240,555	B1	5/2001	Shoff et al.	
6,351,270	B1	2/2002	Nishikawa et al.	
6,501,557	B1	12/2002	Abe	
6,606,746	B1	8/2003	Zdepski et al.	
6,727,918	B1	4/2004	Nason	
6,760,324	B1	7/2004	Scott et al.	
7,124,430	B2 *	10/2006	Aratani et al.	725/142
7,340,457	B1 *	3/2008	Killian et al.	707/5
2002/0007493	A1 *	1/2002	Butler et al.	725/109
2002/0088004	A1	7/2002	Kitsukawa et al.	
2002/0093594	A1	7/2002	Kikinis	
2004/0064835	A1	4/2004	Bellwood et al.	
2004/0107437	A1 *	6/2004	Reichardt et al.	725/37
2004/0221308	A1	11/2004	Cuttner et al.	

FOREIGN PATENT DOCUMENTS

RU	2239293	10/2004
WO	00/07372	2/2000
WO	00/08855	2/2000
WO	02/19689	3/2002
WO	WO 0219689 A2 *	3/2002
WO	03/015406	2/2003

* cited by examiner

Primary Examiner — Mark D Featherstone
(74) *Attorney, Agent, or Firm* — The Nath Law Group; William L. Klima; Susanne M. Hopkins

(57) **ABSTRACT**

A TV-Internet Integration Box allows display of first data broadcast over a TV subscriber channel simultaneously together with second data broadcast over a digital data communications network has respective first and second inputs for receiving at a user premises the first data and the second data according to a user-profile associated with the second data. A combiner unit combines the first data and second data to form a combined video signal; and a video output coupled to the combiner unit conveys the combined video signal to a TV set in a user premises for displaying a first image corresponding to the first data and having superimposed thereon a second image corresponding to the second data. A user at the user premises may interact with the second image for redirecting to the digital data communications network and displaying a program broadcast thereby in at least a portion of the TV set.

21 Claims, 7 Drawing Sheets

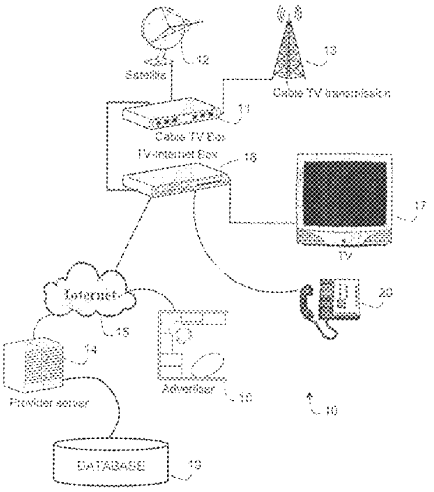

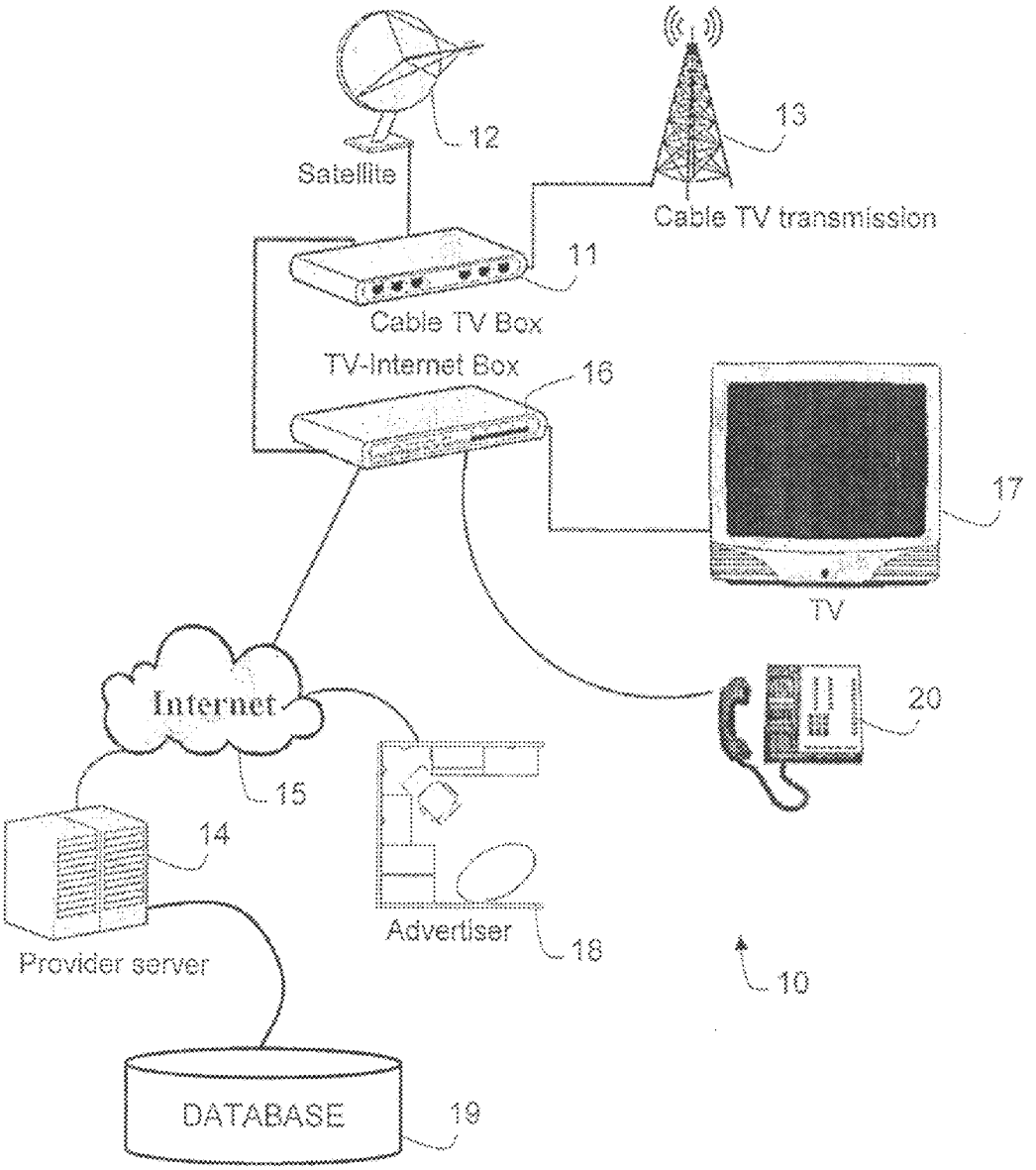
12
Satellite
13
Cable TV transmission
11
Cable TV Box
TV-Internet Box
16
17
TV
Internet
15
20
14
Provider server
Advertiser
18
10
DATABASE
19

FIG. 1

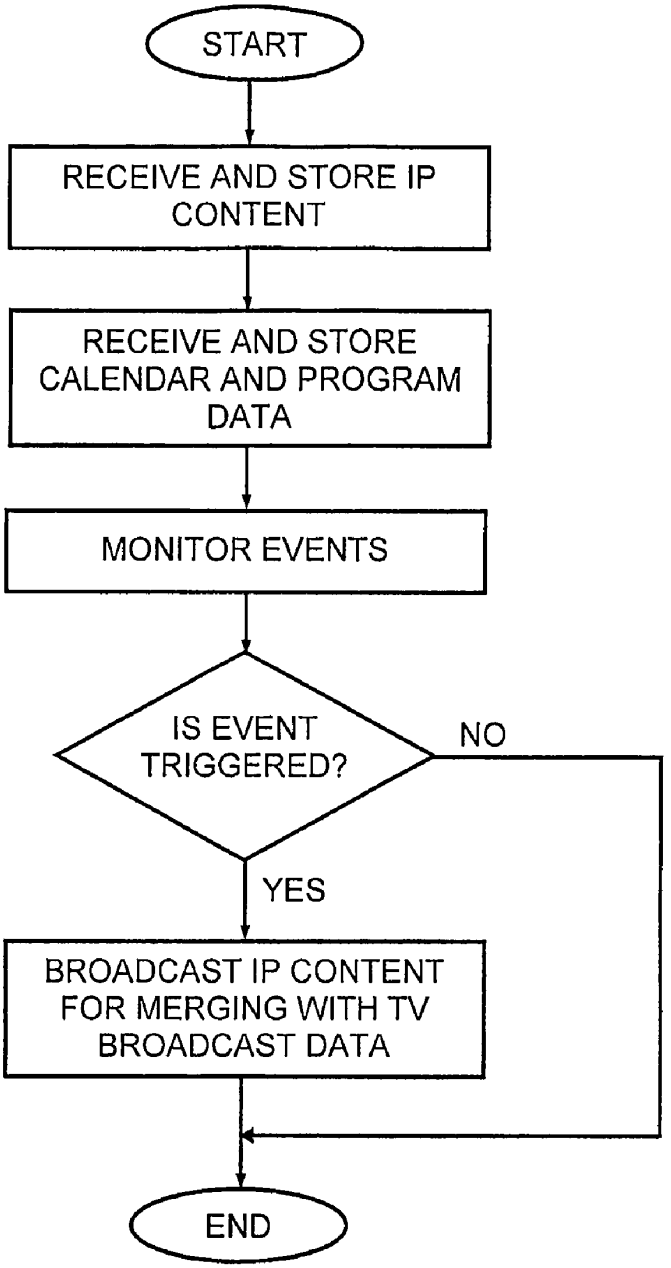
START
RECEIVE AND STORE IP CONTENT
RECEIVE AND STORE CALENDAR AND PROGRAM DATA
MONITOR EVENTS
IS EVENT TRIGGERED?
NO
YES
BROADCAST IP CONTENT FOR MERGING WITH TV BROADCAST DATA
END

FIG. 2

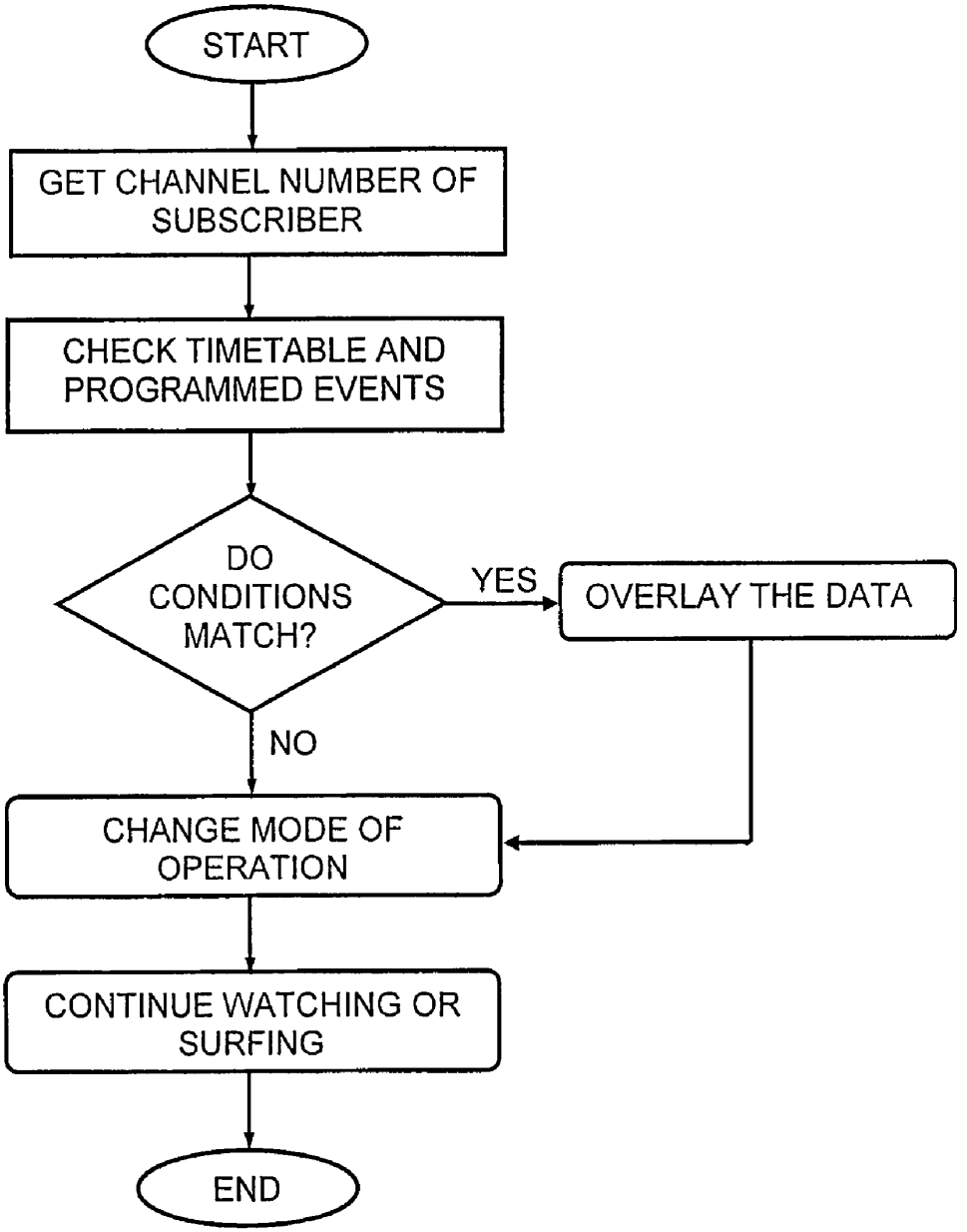
START
GET CHANNEL NUMBER OF SUBSCRIBER
CHECK TIMETABLE AND PROGRAMMED EVENTS
DO CONDITIONS MATCH?
YES
OVERLAY THE DATA
NO
CHANGE MODE OF OPERATION
CONTINUE WATCHING OR SURFING
END

FIG. 3

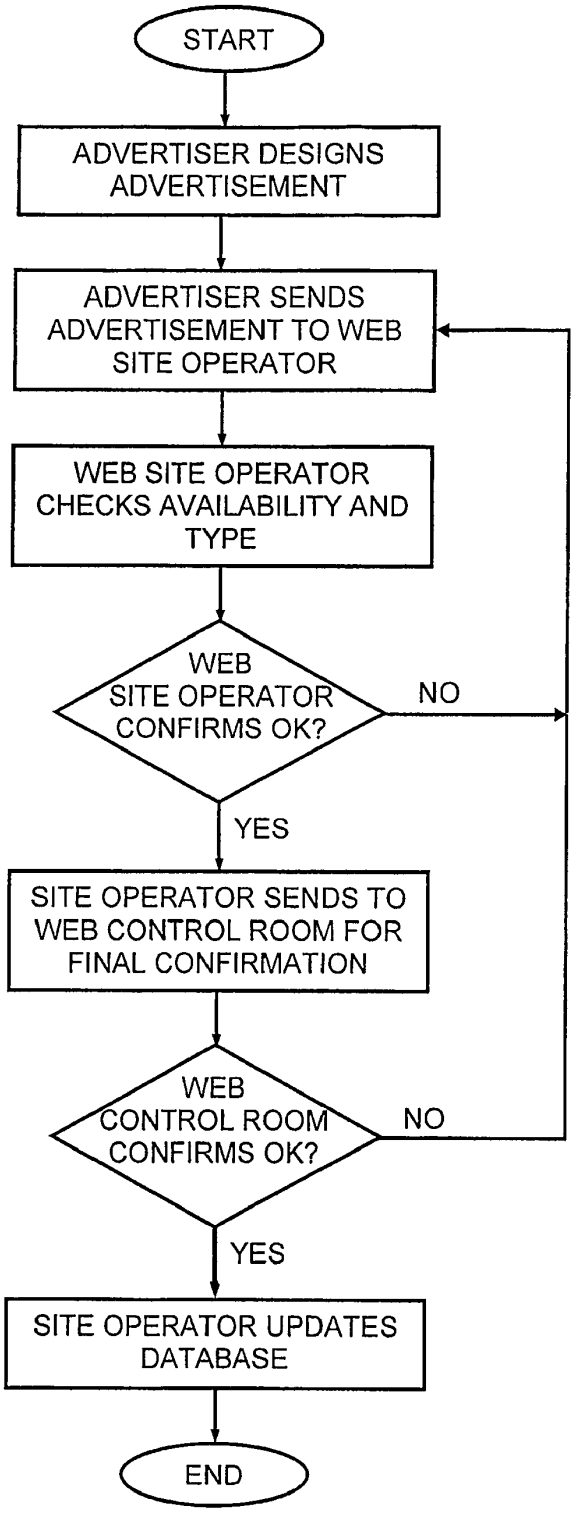
START
ADVERTISER DESIGNS ADVERTISEMENT
ADVERTISER SENDS ADVERTISEMENT TO WEB SITE OPERATOR
WEB SITE OPERATOR CHECKS AVAILABILITY AND TYPE
WEB SITE OPERATOR CONFIRMS OK?
NO
YES
SITE OPERATOR SENDS TO WEB CONTROL ROOM FOR FINAL CONFIRMATION
WEB CONTROL ROOM CONFIRMS OK?
NO
YES
SITE OPERATOR UPDATES DATABASE
END

FIG. 4

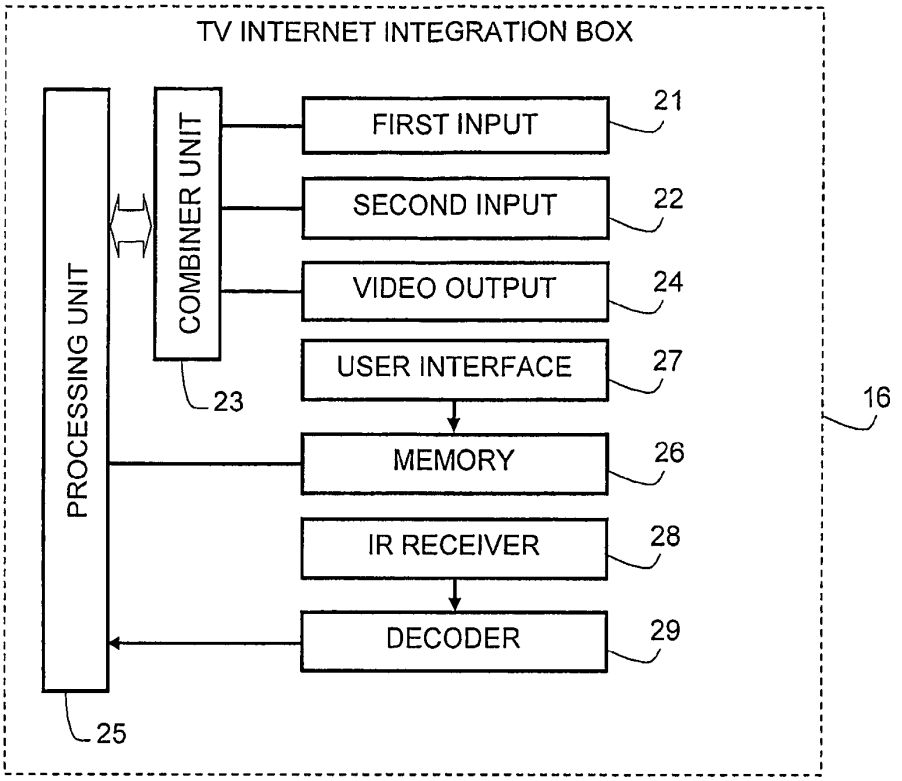
TV INTERNET INTEGRATION BOX
PROCESSING UNIT
COMBINER UNIT
FIRST INPUT
SECOND INPUT
VIDEO OUTPUT
USER INTERFACE
MEMORY
IR RECEIVER
DECODER
21
22
24
27
26
28
29
23
25
16

FIG. 5

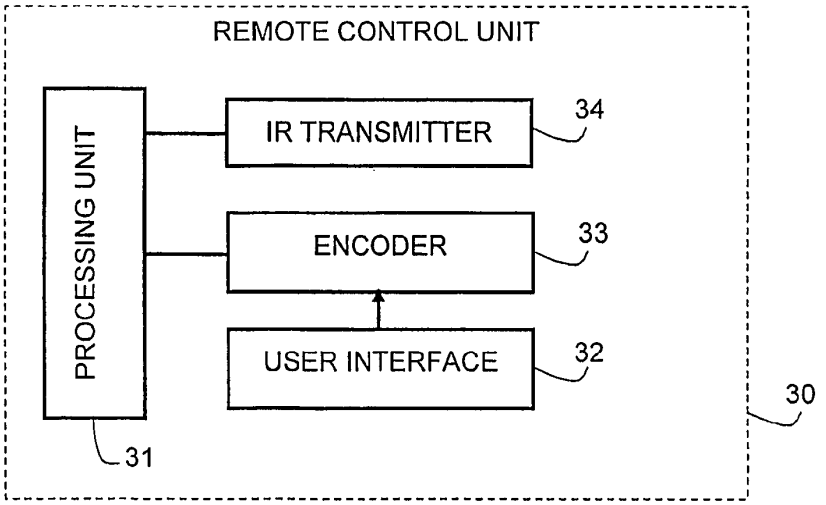
REMOTE CONTROL UNIT
PROCESSING UNIT
IR TRANSMITTER
ENCODER
USER INTERFACE
34
33
32
31
30

FIG. 6

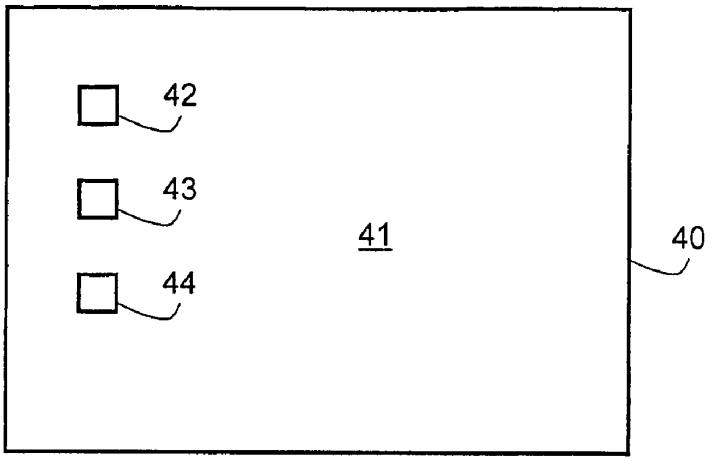

FIG. 7a

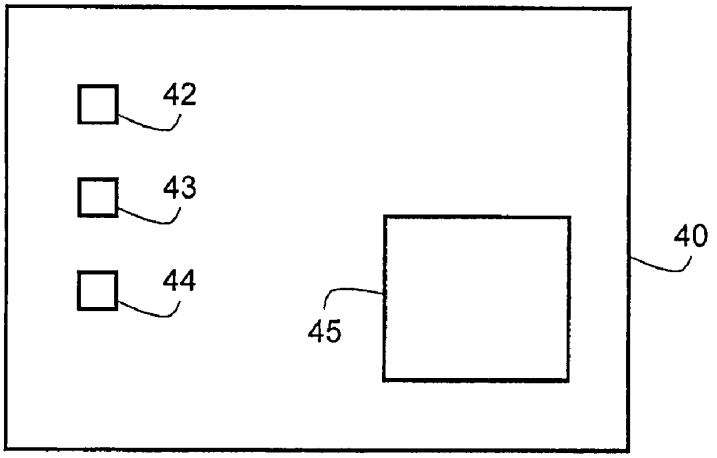

FIG. 7b

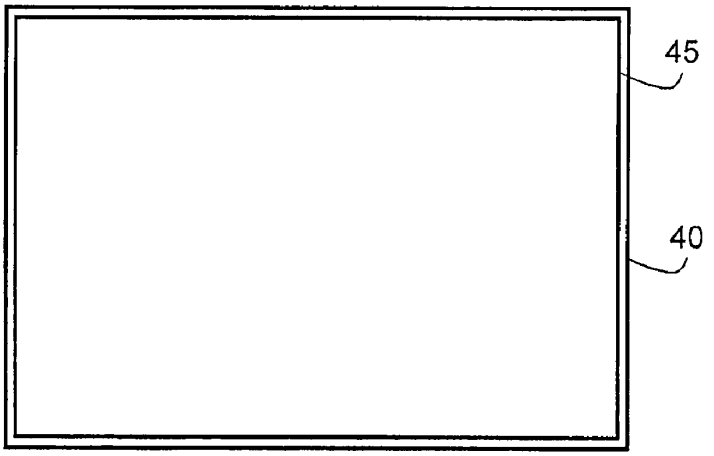

FIG. 7c

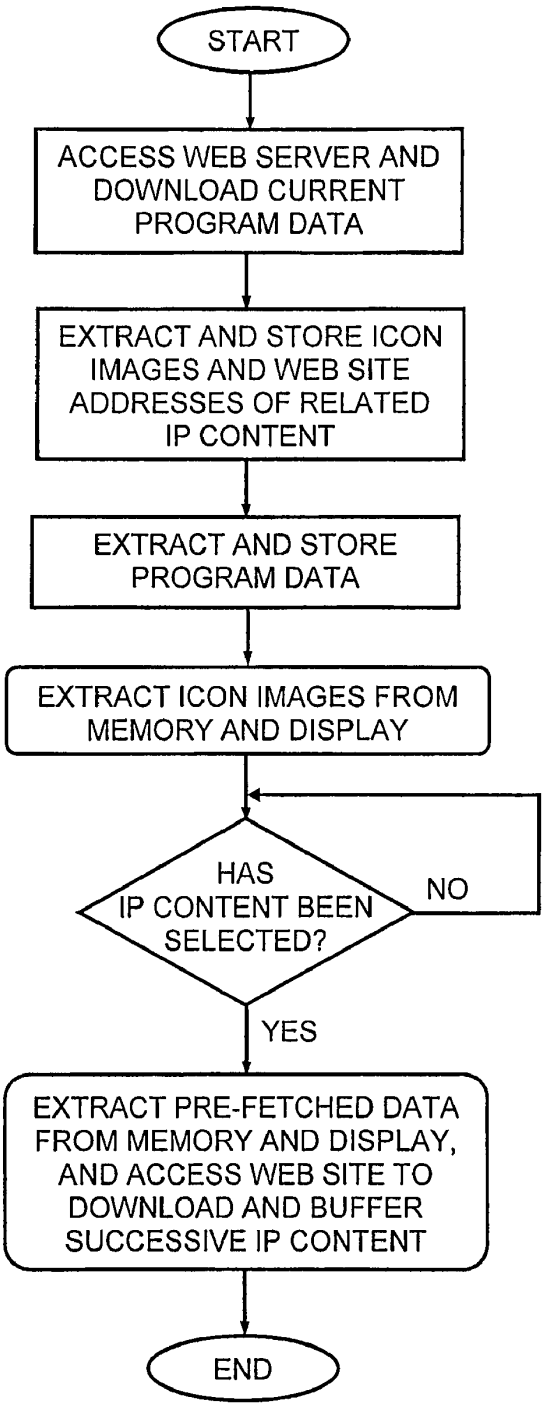
START
ACCESS WEB SERVER AND DOWNLOAD CURRENT PROGRAM DATA
EXTRACT AND STORE ICON IMAGES AND WEB SITE ADDRESSES OF RELATED IP CONTENT
EXTRACT AND STORE PROGRAM DATA
EXTRACT ICON IMAGES FROM MEMORY AND DISPLAY
HAS IP CONTENT BEEN SELECTED?
NO
YES
EXTRACT PRE-FETCHED DATA FROM MEMORY AND DISPLAY, AND ACCESS WEB SITE TO DOWNLOAD AND BUFFER SUCCESSIVE IP CONTENT
END

FIG. 8

METHOD AND APPARATUS FOR FACILITATING TOGGLING BETWEEN INTERNET AND TV BROADCASTS

FIELD OF THE INVENTION

This invention relates to the broadcast of audio/video content over the TV infrastructure and Internet.

BACKGROUND OF THE INVENTION

With the proliferation of cable TV and the high bandwidth currently available for the Internet, which promises to increase even more in the near future, Internet TV is fast becoming a viable alternative to regular and cable TV broadcast channels. Moreover, Internet TV is not subject to the government licensing laws required by cable and broadcast TV channels and thus offers programs that may not be obtainable using regular and cable TV broadcast channels.

It is not uncommon for Internet broadcasters to offer near DVD-quality movies that can be viewed either using video streaming or downloaded to the hard disk of a subscriber's computer for viewing "off-line". The video quality of such movies is vastly superior to that obtainable on a regular TV set, owing to the high resolution associated with computer displays that cannot presently be matched by TV screens. However, this is not particularly troublesome where only pictures are displayed; but it becomes a problem when textual information is displayed that is formatted for high resolution computer monitors since the text is then barely legible when displayed on lower resolution TV screens. Thus, if a regular TV set is used to display Internet content that is rich in text, the resulting display quality is poor.

It would therefore be a significant benefit to users of low resolution displays such as TV screens, to be able to watch regular and cable TV broadcasts and to integrate with Internet content on demand. In particular, it would be desirable to provide such a user with a visual and legible indication when viewing a regular or TV broadcast of available Internet movies or other programs and allow him to use the displayed indication to integrate with a desired Internet broadcast.

These requirements have been only partially addressed in the art. WO 00/08855 to United Video Properties, Inc. and entitled "*A system and method for synchronizing television-related product content and internet-delivered information*" describes a screen generator that merges program guide data with a TV image and superimposes an Interactive TV Guide on the regular TV image.

US 2002/0093594 (Kikinis) entitled "*Method and system for identifying addressing data within a television presentation*" illustrates in FIG. **5** the common connection of TV and Internet to a set-top box.

U.S. Pat. No. 6,606,746 to OpenTV, Inc. entitled "*Interactive television system and method for displaying a graphical user interface using insert pictures*" discloses interactive television having a compressed background picture and one or more compressed insert pictures commonly connected to a TV-Internet Integration box. The compressed insert pictures represent items of a GUI. The local system i.e. computer "pastes" the insert pictures into the background image.

U.S. Pat. No. 6,130,898 to Bell Atlantic Network Services, Inc., entitled "*Simulcasting digital video programs for broadcast and interactive services*" teaches an interactive TV system where TV broadcast data is merged with Internet data. To this end, public wireless packet data network is combined with a broadband digital broadcast network at a plurality of transmitter sites. Customer premises receiving systems

include a receiving antenna and one or more digital entertainment terminals. The terminal includes a channel selector and digital receiver for capturing a digital transport stream from a selected channel. A processor converts selected program information from the transport stream for presentation, e.g. via a television set. The terminal also includes a CPU controlling the operation of the channel selector and the processor in response to user inputs.

None of these references appears to disclose the ability to merge broadcast TV signals with IP packet data at a customer site, specifically in such a manner that a conventional TV set is able to display Internet program selection data while viewing a TV broadcast program and to use the selected data to select an Internet channel, such as a movie, for display on the TV set instead of the TV broadcast program.

SUMMARY OF THE INVENTION

It is therefore an object of the present invention to provide a TV-Internet Integration Box having the ability to merge broadcast TV signals with IP packet data at a customer site.

It is a further object that such a TV-Internet Integration Box permits a TV set connected thereto to display Internet program selection data while viewing a TV broadcast program and to use the selected data to select an Internet movie for display instead of the TV broadcast program.

These objectives are realized in accordance with a first aspect of the invention by a method for facilitating first data broadcast over a TV subscriber channel to be displayed simultaneously together with second data broadcast over a digital data communications network, the method comprising:

receiving said first data and said second data;

combining said first data and said second data to form a combined video signal; and

conveying said combined video signal to a TV set in a user premises for displaying a first image corresponding to the first data and having superimposed thereon a second image corresponding to the second data, said second image being configured to allow a user at said user premises to interact therewith for redirecting to the digital data communications network and displaying a program broadcast thereby in at least a portion of the TV set.

In accordance with a second aspect of the invention there is provided a method for facilitating first data broadcast over a TV subscriber channel to be displayed simultaneously together with second data broadcast over a digital data communications network, the method comprising:

receiving said first data at a user premises;

receiving said second data at the user premises according to a user-profile associated with the second data;

combining said first data and said second data to form a combined video signal; and

conveying said combined video signal to a TV set in a user premises for displaying a first image corresponding to the first data and having superimposed thereon a second image corresponding to the second data, said second image being configured to allow a user at said user premises to interact therewith for redirecting to the digital data communications network and displaying a program broadcast thereby in at least a portion of the TV set.

BRIEF DESCRIPTION OF THE DRAWINGS

In order to understand the invention and to see how it may be carried out in practice, a preferred embodiment will now be

described, by way of non-limiting example only, with reference to the accompanying drawings, in which:

FIG. **1** is pictorial representation showing a TV-Internet Integration Box according to the invention connected to a mixed broadcast network for combining Internet and broadcast TV signals;

FIG. **2** is a flow diagram showing the principal actions carried out by the web server shown in FIG. **1**;

FIG. **3** is a flow diagram showing the principal actions carried out by the TV-Internet Integration Box shown in FIG. **1**;

FIG. **4** is a flow diagram showing the principal actions carried out by an IP content provider such as an advertiser for creating IP content for overlaying by the TV-Internet Integration Box with a broadcast TV signal;

FIG. **5** is a block diagram showing the functionality of the TV-Internet Integration Box shown in FIG. **1**;

FIG. **6** is a block diagram showing the functionality of a remote control unit for interfacing with the TV-Internet Integration Box shown in FIG. **5**;

FIGS. **7***a*, **7***b* and **7***c* are pictorial representations showing a TV set during different stages of receiving and displaying combined Internet and broadcast TV signals; and

FIG. **8** is a flow diagram showing the principal actions carried out by the TV-Internet Integration Box when prefetching a digital broadcast signal.

DETAILED DESCRIPTION OF EXEMPLARY EMBODIMENTS

FIG. **1** is pictorial representation showing a mixed broadcast network **10** having a Cable TV Box **11** coupled to a satellite **12** and a Cable TV transmitter **13** for receiving a cable TV broadcast signal (constituting first data). An Internet broadcast signal comprising IP packet data (constituting second data) is streamed from a web server **14** via the Internet **15** (constituting a digital data communications network) to a TV-Internet Integration Box **16** for display on a TV set **17** coupled thereto. The TV set **17** may be constituted by a computer having a video card and a high resolution display monitor. However, the principal benefit of the invention is obtained when a regular TV set having low resolution is used, since such a configuration has not so far been used to integrate Internet programs with conventional TV broadcasts in the manner proposed by the invention. The TV-Internet Integration Box **16** is connected to the Cable TV Box **11** for combining the broadcast TV signals received by the Cable TV Box **11** with the IP packet data broadcast via the Internet **15**. Also shown is an advertiser **18** having a computer coupled to the Internet **15** for downloading advertising content to the web server **14** for storage in a database **19** and a telephone **20** coupled to the TV-Internet Integration Box **16** for feeding telephony signals to the TV-Internet Integration Box **16**, which combines the received telephony signals with video data received from the Cable TV Box **11** and/or the Internet **15**.

The advertiser **18** typically pays for specific time slots and for one or more specific channels during which his advertisement will be broadcast. Thus, in addition to the advertising content which is prepared and then stored on the web server **14** in known manner, the advertiser **18** also specifies when the advertisement is to be broadcast and on which TV channel or channels. By such means, a sports advertiser can request time during the interval of a football match to broadcast a commercial, while a toy advertiser would obviously prefer to broadcast a commercial during a children's TV program. Different time slots may be charged out at different rates depending on the ratings associated with the associated TV program. After selecting one or more time slots, the advertisement content as well as the selected time slots and program data are stored in the database **19** accessed by the web server **14**.

FIG. **2** is a flow diagram showing the principal actions carried out by the web server **14**, which is responsive to an event timetable stored and updated in the database **19**. To this end, an IP content provider interfaces with the web server for creating IP content and associating therewith calendar and program data indicating dates, times and channels in respect of which the IP content is to be streamed to the customer premises. Once this is done, the web server **14** monitors events, which are triggered in known manner causing the web server **14** to extract from the database **19** pre-stored IP content for streaming over the Internet **15** to the TV-Internet Integration Box **16**, where it is processed as described below with reference to FIG. **3** of the drawings.

FIG. **3** is a flow diagram showing the principal actions carried out by the TV-Internet Integration Box **16**. In accordance with one embodiment of the invention, the subscriber selects what kind of IP content he wishes to receive and in respect of which program details, such as icons and/or textual data, are to be displayed together with the TV broadcast data. For example, a subscriber may wish to block certain types of program material or may wish to receives details thereof only during limited hours, for example when the children are asleep. To this end, the subscriber is able to program the TV-Internet Integration Box **16** in much the same way that a video cassette recorder is programmed so as to store in the memory **25** a timetable indicating what type of IP data is to be displayed and when. The timetable is updated as and when required by the subscriber. The TV-Internet Integration Box **16** is adapted to check the timetable periodically and to filter out incoming IP content that is either of a type that is not required or that is broadcast during an unauthorized time window. By such means, an additional layer of authorization may be provided to that stored in the database **19** for access by the web server **14**, thus allowing pre-fetching of IP content and storage in the memory **25** of the TV-Internet Integration Box **16**. Upon detecting a matching event, corresponding to received IP content that is of interest to the subscriber, the TV-Internet Integration Box **16** overlays the matched IP content with the current broadcast and displays the new integrated video on the subscriber's TV set **17**. For example, the matched information may be an icon that indicates to the subscriber that an Internet movie is currently being broadcast; or it may be an advertisement or information related to the TV program being broadcast.

The subscriber can respond to the overlaid data using a remote control unit, described below with reference to FIG. **6** of the drawings, which is programmed to interact with the displayed icon or other data that is overlaid on the TV broadcast. To this end, the displayed IP content may optionally contain textual information advising the subscriber to press a particular button on the remote control unit. Alternatively, buttons on the remote control unit may be color-coded and the icon may be colored so as to indicate to the subscriber which color-coded button to press for selection of the corresponding IP content. If the subscriber responds to the overlaid data by pressing a button on the remote control unit, the TV-Internet Integration Box **16** receives the signal from the remote control unit and changes the priorities for use with the Picture-in-Picture (PIP) technique to display the TV broadcast in a reduced window and to show the other media, i.e. the IP content, in an enlarged window. The IP content can be a custom designed web page for TV, or a game or advertisement

movie or any other information placed on the matched record. PIP techniques are known per se and allow a video or graphics image to be inserted on top of a movie clip and to be positioned and sized. An Effect In and Effect Out may be used to fade or move the inserted video to the screen. In accordance with one such technique, the bulk of the IP content e.g. corresponding to a movie may be rendered transparent so as to provide a transparent window through which an icon e.g. relating to the movie is visible. The video content of the TV broadcast is displayed in one window and the IP content in another window. Since the bulk of the IP content is transparent it will remain invisible to the subscriber, while the icon (or text) will be visible since it is opaque. On selecting the displayed icon, the attributes may simply be reversed so as to hide the icon while displaying the movie or other content. At the same time, the TV broadcast may be re-sized either to display it in a minimized window it the case that it is to be suppressed altogether, or to display it superimposed on the IP content so that both are visible at the same time in different, possibly overlapping, windows.

FIG. **4** is a flow diagram showing the principal actions carried out by an IP content provider such as an advertiser for creating IP content for overlaying by the TV-Internet Integration Box with a broadcast TV signal. Thus, the advertiser designs an advertisement and sends it together with a request to a web site link via the Internet or off-line as required. Since the IP content is intended for display on a low resolution TV screen, any textual information that forms part of the IP content is formatted so as to be legible when displayed on lower resolution TV screens. Generally, this requires reducing the quantity of textual information to a minimum and sizing any text so that it is legible. Often, a web advertiser will wish to create an on-line advertisement based on an existing web page. In such case, it may be necessary to reduce and resize any textual information so as to comply with these requirements.

The request specifies calendar and program data as explained above, which the web site operator checks for availability and type, defining to which group of users it belongs. If the required time slots are available for the requested channels, the site operator confirms the request and forwards the request to the web control room for final confirmation. On confirming the request, a status flag of the advertisement is changed so as to indicate that the advertisement is awaiting final confirmation from the web control room. At the web control room the advertisement is checked for content by human evaluators who either approve or reject the advertisement content and, in the case of rejection, may provide reasons therefore. If the advertisement (or other IP content) is approved by the web control center, its status is set to "approved" and the web control center bills the customer and the web site operator adds the advertisement and the scheduling information to the database **19**. The customer who is billed is typically the advertiser but may be any entity that is identified by a digital signature associated with the advertisement. If either of the requests for approval is rejected the status of the advertisement is set to "rejected" and the web control room informs the advertiser of the grounds for rejection, allowing the advertiser to change the request and re-send to the web site operator. Optionally, in such case the web server may be adapted to display to the advertiser the occupied timetable and suggest new timetable. Only those advertisements whose status flag indicates that they are approved by the web control room are actually available for transmission. The time slot and channel information associated with any advertisement that is not so approved remain available for other advertisements and will be shown as available to another advertiser who attempts to schedule an advertisement. Only when the advertisement is actually approved by the web site operator and its status is updated accordingly, are the transmission time and channel locked for use by other users.

The IP packet data may optionally be associated with predefined user-profiles that are also stored in the database **19** so that the advertisement or other IP data is sent only to specific TV-Internet Integration Boxes. Such user-profiles may be configured by the advertiser or by the user. Thus, for example, the invention allows supplementary or complementary program content to be associated with a TV broadcast, while providing the facility to view the supplementary program content only to specific subscribers, according to their user-profiles.

Thus, by way of non-limiting example, the invention allows sign language to be associated with a TV broadcast for the hard of hearing. It is known to display sign language in a corner of the screen, but since this is usually done indiscriminately it also apt to disturb the majority of viewers who do not need the sign language. The invention may be used to avoid this by conveying the sign language as IP content separate from main TV broadcast and allowing subscribers to register for a "sign language" service so that only registered subscribers receive the IP content. IP content files corresponding to sign language to be associated with different TV broadcasts are created as explained above, and stored in the database **19** together with user-profile data indicating which subscribers are registered to obtain the service. The user-profile data may contain data that further refines the target audience, such as categories of TV program alongside which the sign language is to be displayed. The user-profile data may further contain geographical data or language data that allows sign language corresponding to a target language to be conveyed to specific audiences. By such means, a TV program can be accompanied by a sign language overlay that is customized to a target language depending on the location of the IP target address or the language requested by the subscriber on registering for the service.

FIG. **5** is a block diagram showing the functionality of the TV-Internet Integration Box **16** shown in FIG. **1**. Thus, the TV-Internet Integration Box **16** comprises a first input **21** for receiving first data corresponding to a TV broadcast signal, typically being a cable TV signal and a second input **22** for receiving respective second data corresponding to IP packet data. The IP packet data may optionally be downloaded to specific TV-Internet Integration Boxes in accordance with predefined user-profiles associated with IP packet data and stored in the database **19**. A combiner unit **23** is coupled to the first and second inputs for combining the first data and the second data to form a combined video signal. A video output **24** is coupled to the combiner unit **23** for conveying the combined video signal to a TV set in a user premises. The TV set may be a conventional TV having a relatively low resolution screen for displaying a first image corresponding to the first data and having superimposed thereon a second image corresponding to the second data. Alternatively, it can be a computer having a video card for displaying a combined video image on a high resolution display monitor.

The combiner unit **23** is shown coupled to a processing unit **25** although in practice it may be implemented in software by the processing unit **25**. A memory **26** is coupled to the processing unit **25** for storing program data, such as profiles and program timetables etc. so as to allow the processing unit **25** to filter incoming IP content according to pre-defined profiles and other selection data. The processing unit **25** is also coupled to a user interface **27** that allows the subscriber to

program the TV-Internet Integration Box **16** and store the program data in the memory **26**. An IR receiver **28** is adapted to receive IR commands from a remote control unit described below with reference to FIG. **6** and is coupled to a decoder **29**, which decodes a received IR signal and feeds it to the processing unit **25** for further processing.

FIG. **6** is a block diagram showing the functionality of a remote control unit **30** for interfacing with the TV-Internet Integration Box **16** shown in FIG. **5**. The remote control unit **30** includes a processing unit **31** coupled to a user interface **32**, typically having a keypad or pushbuttons for program selection and setting as well as other functions. The user interface **32** is coupled to an encoder **33** which is responsive to a pressed key or key combination for producing a corresponding IR signal that is transmitted by an IR transmitter **34** to the TV-Internet Integration Box **16** for receipt by the IR receiver **28** thereof.

As noted above, the keys may be color coded in correspondence with pre-arranged colors of commonly displayed icons, so that pressing on a specific key activates the displayed icon of the same color. Alternatively, at least some of the keys may be covered with transfers depicting commonly displayed icons, whereupon the appropriate keys or button for activating each icon are easily recognized.

The keys may also be programmed so that depressing the same key more than once automatically re-sizes the windows containing the TV broadcast and the Internet broadcast. For example, FIG. **7***a* shows the default situation where a TV screen **40** displays a conventional TV broadcast in a window **41** that is sized to occupy the whole area of the TV screen **40** and will be referred to as the primary window. Also shown are IP icons **42**, **43** and **44** each of which points to a different IP content that is streamed from a respective web site of known address. On pressing the key on the remote control unit **30** that corresponds to the icon **42**, the IP content corresponding thereto is displayed within a small window **45** (referred to as the secondary window) that is contained within the primary window **41** as shown in FIG. **7***d*. The icons **42**, **43** and **44** remain visible so that, if desired, the selected program can be changed by pressing a different key on the remote control unit **30**. On pressing a key a second time in succession, the IP content is re-sized so that its window **45** occupies substantially the whole area of the screen as shown in FIG. **7***c*. On pressing the key a third time in succession, the situation reverts to the default shown in FIG. **7***a* where the primary window **41** containing the TV broadcast occupies the whole area of the TV screen **40**. Thus, each key operates as a three-way toggle that switches between three different display modes.

The second data containing display information for the icons also contains data that informs the TV-Internet Integration Box **16** on which channel or channels the associated IP content is to be streamed and at what times. The second data also specifies the web site where the IP content is located. This is summarized in the following table:

TABLE I

Second data - definition			
Icon image	Channel	Time	Website of IP content
ICON.GIF	2; 23	19:30; 21:30	www.AB.com/adverts/123.htm

Thus, the second data depicted in Table I above shows that the icon image is contained in a file called ICON.GIF and that the IP content relating thereto is to be streamed on channels **2** and **23** at times 19:30 and 21:30, these being the start times. The end times are determined by the duration of the IP content to be streamed, which is downloaded from a web site whose name is shown in the table and is contained in the second data.

The second data is downloaded from the web server **14** whose web site address is known to the TV-Internet Integration Box **16**. In accordance with one embodiment, the processing unit **25** is programmed to access the web server **14** periodically and download current program data. For example, once every 2 to 3 hours the TV-Internet Integration Box **16** may automatically access the web server **14** to download the second data corresponding current program data for the next 3 hours as formatted according to Table I. The downloaded information is stored locally in the memory **26** of the TV-Internet Integration Box **16**. This allows the TV-Internet Integration Box **16** to pre-fetch IP content relating to all the currently displayed icons and to store the data relating thereto in the memory **26** thus obviating the need to access the web site of a selected icon for the purpose of downloading IP selected content. Since this carries the overhead of web access and downloading of data, which can be cumbersome particularly if there is insufficient bandwidth, pre-fetching in this manner ensures that initial IP content data will be immediately available on selection of one of the icons.

FIG. **8** is a flow diagram showing the principal actions carried out by the TV-Internet Integration Box when pre-fetching a digital broadcast signal. Thus, the TV-Internet Integration Box **16** periodically accesses the web server **14** and downloads current program data, constituting the second data. It then extracts from the current program data the image files of the current icons and stores them in the memory **26**. In like manner, it extracts the web sites of the IP content corresponding to the currently displayed icons and then accesses these sites to pre-fetch the respective IP content, which it likewise stores in the memory **26**. On selection of an icon, the TV-Internet Integration Box **16** opens a secondary window **45** within the primary window **41**, reads from the memory **26** the pre-fetched IP content and displays it in the secondary window **45**.

It will be understood that the TV-Internet Integration Box according to the invention may be at least partially implemented by a suitably programmed computer. Likewise, the invention contemplates a computer program being readable by a computer for executing the method of the invention. The invention further contemplates a machine-readable memory tangibly embodying a program of instructions executable by the machine for executing the method of the invention.

The invention claimed is:

1. A method for generating at a user's premises an overlay using video signals constituting a first data and overlay-enabling digital data constituting a second data, the method comprising:

(a) providing a combiner unit at the user's premises, wherein:

the combiner unit is coupled to a TV set and connected to a separate TV tuner box or TV tuner in the TV set, at the user's premises, and

the combiner unit is also connected through distinct networks to each of a video signal source providing video signals through the TV tuner box or TV tuner in the TV set, and an Internet data source providing overlay-enabling digital data over the Internet, wherein

said video signals and said overlay-enabling digital data originate from unrelated sources and are transmitted to the user's premises by different resources as mutually distinct and independent inputs, and wherein

said overlay-enabling digital data includes at least:

a Web link indicating a website where content that is associated with said overlay-enabling digital data is stored,

an image indicative of the content associated with said overlay-enabling digital data, and

an overlay activation criterion; and

(b) processing at the user's premises said overlay-enabling digital data and generating at the user's premises a corresponding overlay only if said activation criterion is met, wherein generating an overlay includes:

generating at the user's premises a first display screen including at least a first portion corresponding to said video signals and a second portion overlaid over said first portion and corresponding at least to said image, and

associating the Web link with said second portion of the first display screen thereby allowing a user to cause the combiner unit to retrieve said content, generate a second video display screen including at least a portion which corresponds to said content, and input the second display screen to said TV set.

2. The method according to claim **1**, wherein said overlay-enabling digital data is received at the user premises according to a pre-stored user profile.

3. The method according to claim **1**, further including:

receiving a command from a user at said user premises; and

responsive to said command, resizing said first portion and/or said second portion of said first display screen.

4. The method according to claim **1**, wherein the content stored at said website enables streaming of digital data over the Internet; and

said method further including: pre-fetching and buffering said digital data stream from said website, thereby allowing said digital data stream to be displayed substantially without delay upon redirection by the user.

5. The method according to claim **1**, wherein the overlay-enabling digital data comprises data representative of one or more second images, and for each of said one or more second images said overlay-enabling data comprises respective web site addresses where IP content associated with the respective second image is stored, and wherein said generating an overlay further includes within said first display said one or more second images.

6. The method according to claim **1**, wherein the overlay-enabling digital data is supplementary or complementary to the video signals.

7. The method according to claim **1**, wherein the image includes an icon that indicates to the user that digital data from Internet content is currently being displayed and which provides an indication of a nature of said Internet content.

8. The method according to claim **1**, wherein the image contains textual information advising the user to press a particular button on the remote control unit.

9. The method according to claim **1**, wherein said overlay activation criterion includes at least one of the following: a timing information, data specifying one or more TV subscriber channels, a user command information.

10. The method according to claim **5**, further including:

periodically accessing a web server for downloading said overlay-enabling digital data;

extracting from the overlay-enabling digital data said one or more second images and the respective web sites corresponding to each of said second images;

retrieving and storing digital content from said web sites; and

if the overlay activation criterion is met and a user command that is associated with an image from amongst said one or more second images is identified, displaying the respective image from amongst the second images, accessing the respective web site associated with the displayed image and extracting and buffering content from the website.

11. The method according to claim **5**, further comprising displaying a respective IP content when a corresponding one of said one or more second images is selected.

12. The method according to claim **7**, including selecting specific Internet content by pressing a color-coded button on a remote control in accordance with a color of said icon.

13. A TV-Internet Integration Box for generating at a user's premises an overlay using video signals constituting a first data and overlay-enabling digital data constituting a second data, the TV-Internet Integration Box comprising:

a combiner unit at a user's premises coupled to a separate TV tuner box or TV tuner, wherein

the combiner unit is also connected through distinct networks to each of a video signal source providing video signals through the TV tuner box or TV tuner, and an Internet data source providing overlay-enabling digital data over the Internet, wherein

said video signals and said overlay-enabling digital data originate from unrelated sources and are transmitted to the user's premises by different resources as mutually distinct and independent inputs, and

wherein said overlay-enabling digital data includes at least:

a Web link indicating a website where content that is associated with said overlay-enabling digital data is stored;

an image indicative of the content associated with said overlay-enabling digital data; and

an overlay activation criterion, wherein

the combiner unit is responsive to an overlay activation criterion being met for generating a corresponding overlay, including:

generating at the user's premises a first display screen including at least a first portion corresponding to said video signals and a second portion overlaid over said first portion and corresponding at least to said image, and

associating the Web link with said second portion of the first display screen thereby allowing a user to cause the combiner unit to retrieve said content, and generate a second video display screen including at least a portion which corresponds to said content; and

a video output interface, coupled to or integrated within the combiner unit and configured to be coupled to a video input of said TV set and to display said first display screen or said second video display screen.

14. The TV-Internet Integration Box according to claim **13**, wherein said overlay-enabling digital data is received at the user premises according to a pre-stored user-profile.

15. The TV-Internet Integration Box according to claim **13**, further including:

a command input for receiving a command from a user at said user premises; and

a frame adjuster for resizing said first portion and/or said second portion of said first display screen in response to said command.

16. The TV-Internet Integration Box according to claim **13**, further including:

a receiver for receiving a digital data stream, wherein the stream of the digital data is enabled by the content stored at said website; and

a processing unit for pre-fetching and buffering said digital data stream from said website, thereby allowing said digital data stream to be displayed substantially without delay upon redirection by the user.

17. The TV-Internet Integration Box according to claim **13**, wherein the overlay-enabling digital data comprises data representative of one or more second images, and for each of said one or more second images said overlay-enabling data comprises respective web site addresses where IP content associated with the respective second image is stored,

and wherein the combiner unit is configured to:

periodically access a web server for downloading said overlay-enabling digital data;

extract from the overlay-enabling digital data said one or more second images and the respective web sites corresponding to each of said second images;

retrieve and store digital content from said web sites; and

if the overlay activation criterion is met, and a user command that is associated with an image from amongst said one or more second images is identified, display the respective image from amongst the second images, access the respective web site associated with the displayed image and extract and buffer content from the website.

18. The TV-Internet Integration Box according to claim **13**, wherein the image includes an icon that indicates to the user that digital data from Internet content is currently being displayed and which provides an indication of a nature of said Internet content.

19. The TV-Internet Integration Box according to claim **13**, wherein the image contains textual information advising the user to press a particular button on the remote control unit.

20. The TV-Internet Integration Box according to claim **13**, wherein said overlay activation criterion includes at least one of the following: a timing information, data specifying one or more TV subscriber channels, a user command information.

21. The TV-Internet Integration Box according to claim **18**, wherein the icon is colored so as to allow user selection of a specific Internet content by pressing a color-coded button on a remote control in accordance with a color of said icon.

* * * * *

EXHIBIT 2

to Declaration of Charles Cantine in Support of Plaintiff TVnGO's Opening Claim Construction Brief

US009124945B2

(12) **United States Patent**
Merlin

(10) **Patent No.: US 9,124,945 B2**
(45) **Date of Patent: *Sep. 1, 2015**

(54) **INTEGRATING, AT USER'S PREMISES, TV CHANNEL FORMAT MATERIAL WITH IP FORMAT MATERIAL THROUGH OVERLAYS**

(75) Inventor: **Yaakov Merlin**, Raanana (IL)

(73) Assignee: **TVNGO LTD**, Amsterdam (NL)

(*) Notice: Subject to any disclaimer, the term of this patent is extended or adjusted under 35 U.S.C. 154(b) by 801 days.

This patent is subject to a terminal disclaimer.

(21) Appl. No.: **13/336,219**

(22) Filed: **Dec. 23, 2011**

(65) **Prior Publication Data**

US 2012/0096506 A1 Apr. 19, 2012

Related U.S. Application Data

(63) Continuation of application No. 11/794,825, filed as application No. PCT/IL2005/000035 on Jan. 11, 2005, now Pat. No. 8,132,220.

(51) **Int. Cl.**

H04N 21/643	(2011.01)
H04N 21/431	(2011.01)
H04N 21/438	(2011.01)
H04N 21/443	(2011.01)
H04N 21/462	(2011.01)
H04N 21/4782	(2011.01)

(52) **U.S. Cl.**
CPC ***H04N 21/64322*** (2013.01); ***H04N 21/4316*** (2013.01); ***H04N 21/4381*** (2013.01); ***H04N 21/4438*** (2013.01); ***H04N 21/4622*** (2013.01); ***H04N 21/4782*** (2013.01)

(58) **Field of Classification Search**
None
See application file for complete search history.

(56) **References Cited**

U.S. PATENT DOCUMENTS

6,136,898	A	10/2000	Loza et al.	
6,240,555	B1	5/2001	Shoff et al.	
6,351,270	B1	2/2002	Nishikawa et al.	
6,606,746	B1	8/2003	Zdepski et al.	
7,124,430	B2 *	10/2006	Aratani et al.	725/142
7,340,457	B1 *	3/2008	Killian et al.	1/1
7,456,902	B2	11/2008	Kikinis	
2002/0007493	A1 *	1/2002	Butler et al.	725/109
2004/0107437	A1 *	6/2004	Reichardt et al.	725/37

FOREIGN PATENT DOCUMENTS

WO	WO 00/08855	2/2000
WO	WO 02/19689 A	3/2002

* cited by examiner

Primary Examiner — Mark D Featherstone

(57) **ABSTRACT**

A method for displaying a TV broadcast signal and Internet signal on a a TV. Preferably, a Web link image is displayed on the TV, which a user can select to display IP content.

22 Claims, 7 Drawing Sheets

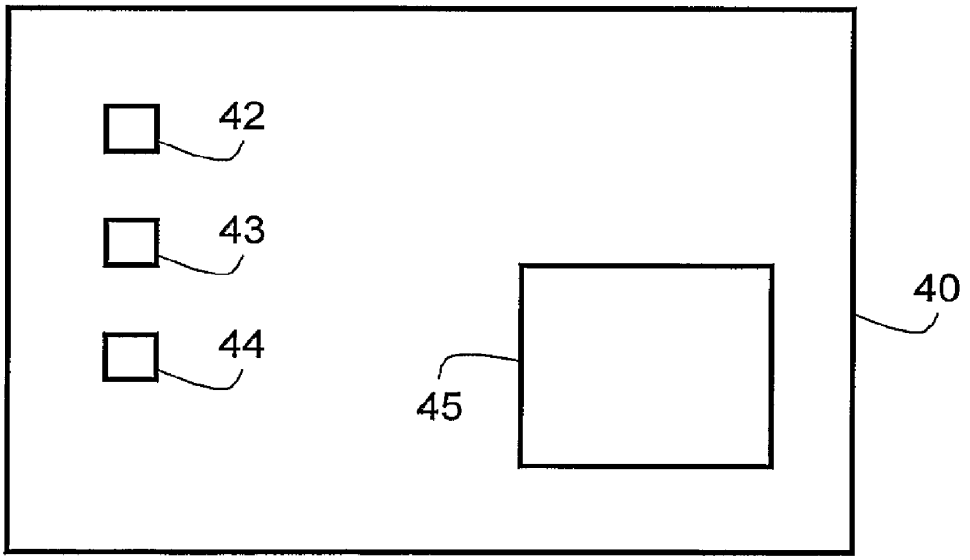

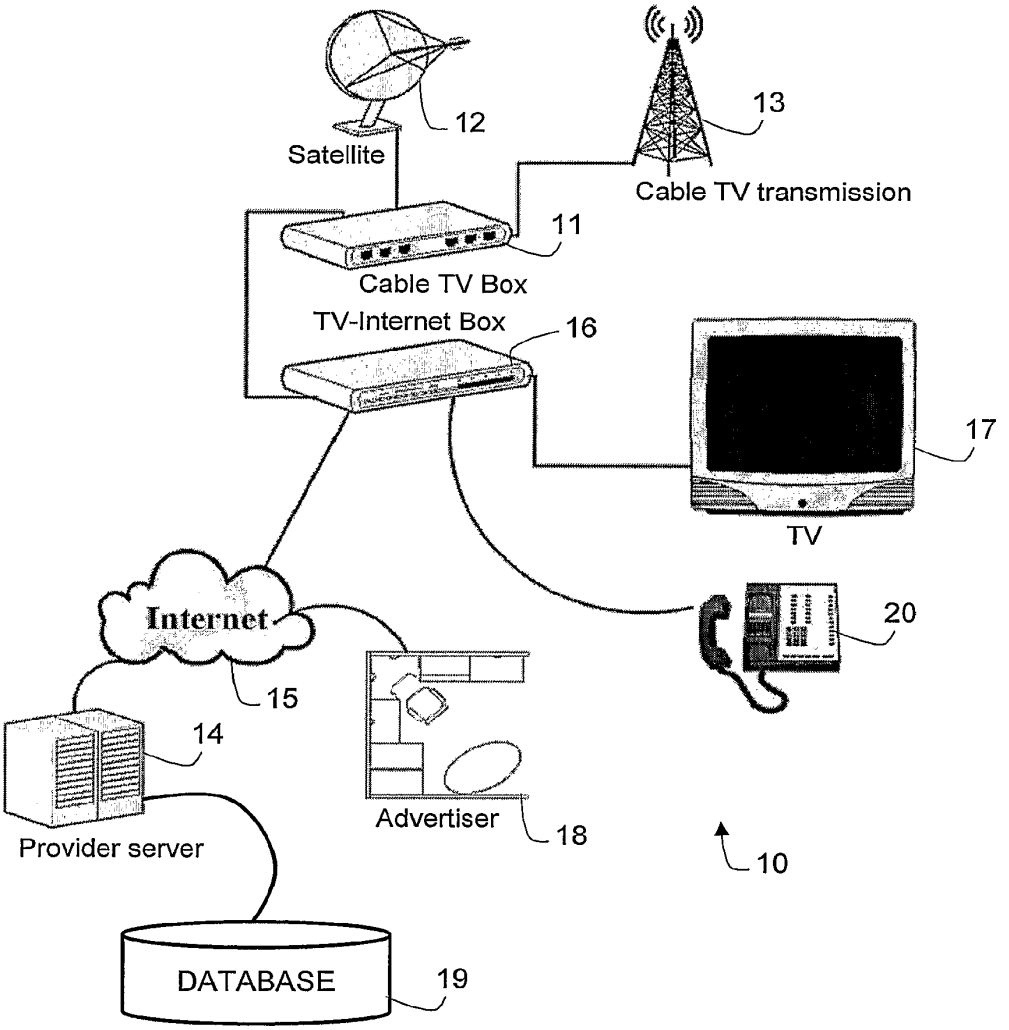
12
Satellite
13
Cable TV transmission
11
Cable TV Box
TV-Internet Box
16
17
TV
Internet
15
20
14
Provider server
Advertiser
18
10
DATABASE
19

FIG. 1

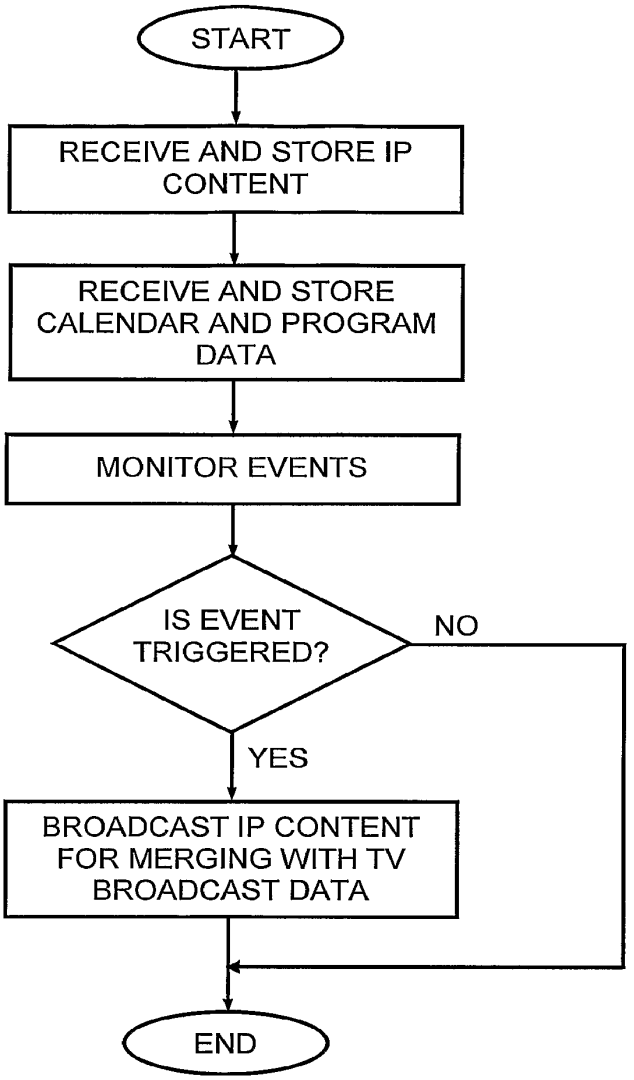
START
RECEIVE AND STORE IP CONTENT
RECEIVE AND STORE CALENDAR AND PROGRAM DATA
MONITOR EVENTS
IS EVENT TRIGGERED?
NO
YES
BROADCAST IP CONTENT FOR MERGING WITH TV BROADCAST DATA
END

FIG. 2

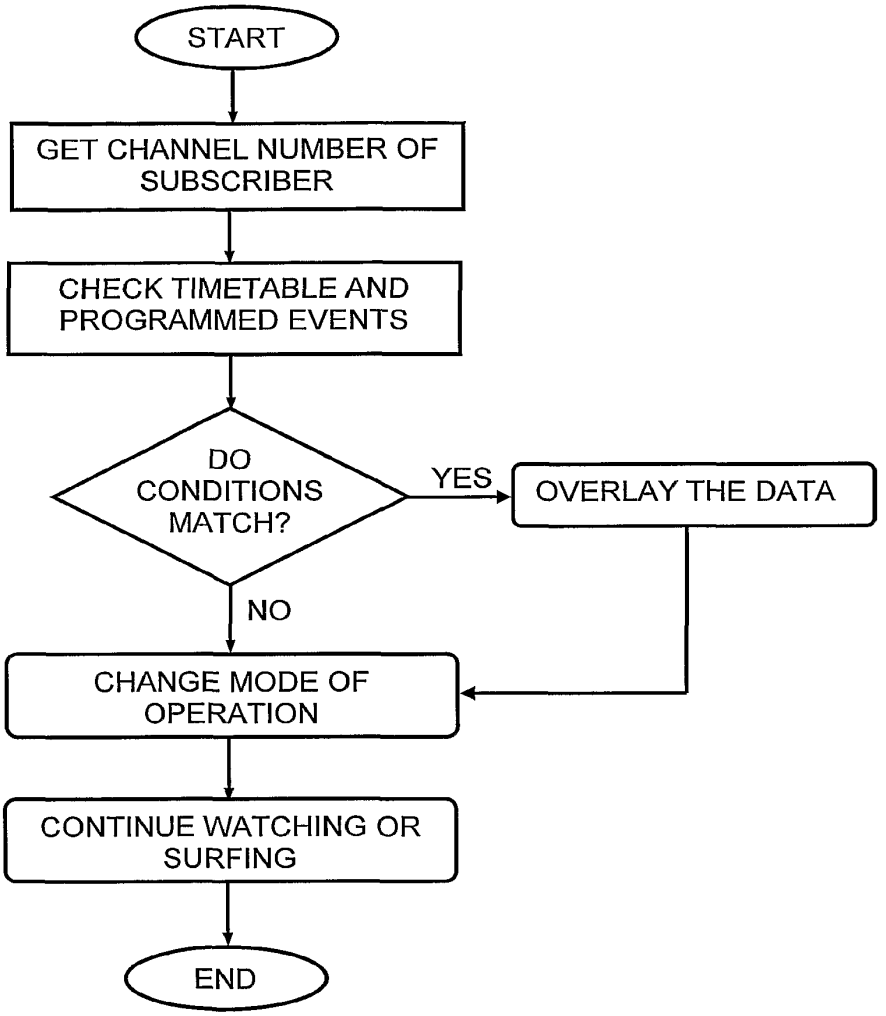
START
GET CHANNEL NUMBER OF SUBSCRIBER
CHECK TIMETABLE AND PROGRAMMED EVENTS
DO CONDITIONS MATCH?
YES
OVERLAY THE DATA
NO
CHANGE MODE OF OPERATION
CONTINUE WATCHING OR SURFING
END

FIG. 3

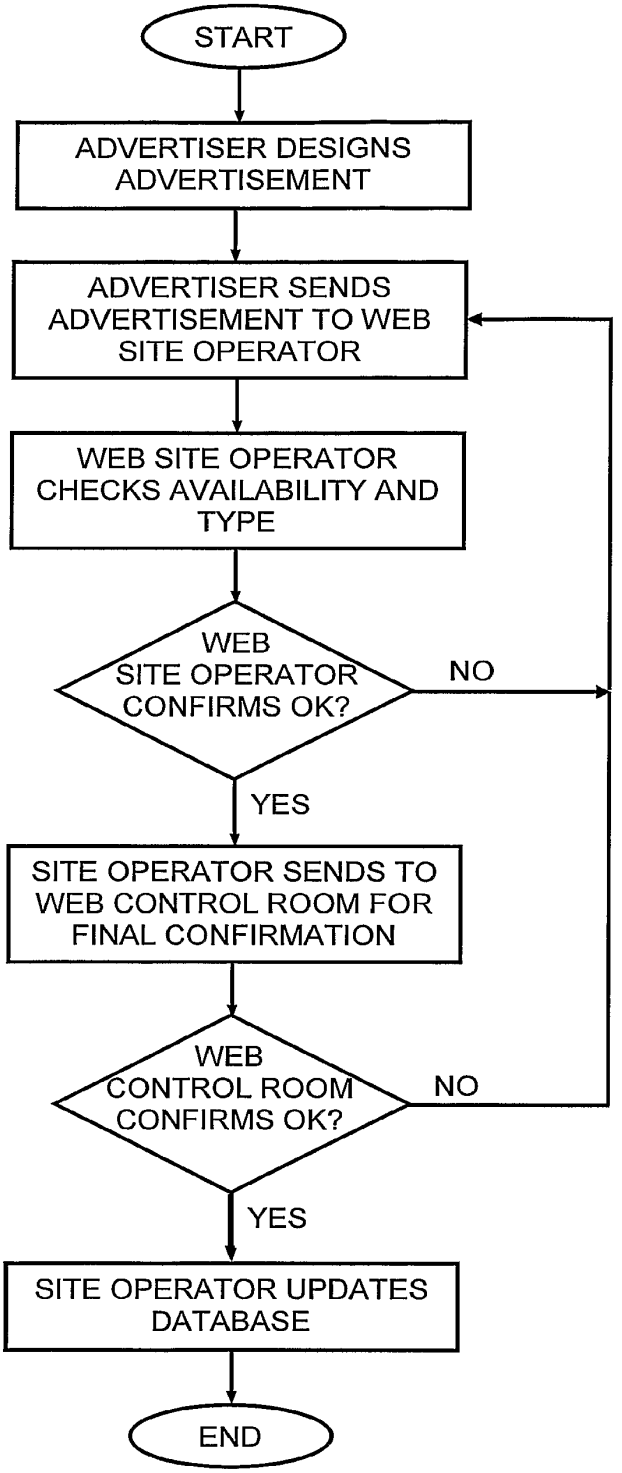
START
ADVERTISER DESIGNS ADVERTISEMENT
ADVERTISER SENDS ADVERTISEMENT TO WEB SITE OPERATOR
WEB SITE OPERATOR CHECKS AVAILABILITY AND TYPE
WEB SITE OPERATOR CONFIRMS OK?
NO
YES
SITE OPERATOR SENDS TO WEB CONTROL ROOM FOR FINAL CONFIRMATION
WEB CONTROL ROOM CONFIRMS OK?
NO
YES
SITE OPERATOR UPDATES DATABASE
END

FIG. 4

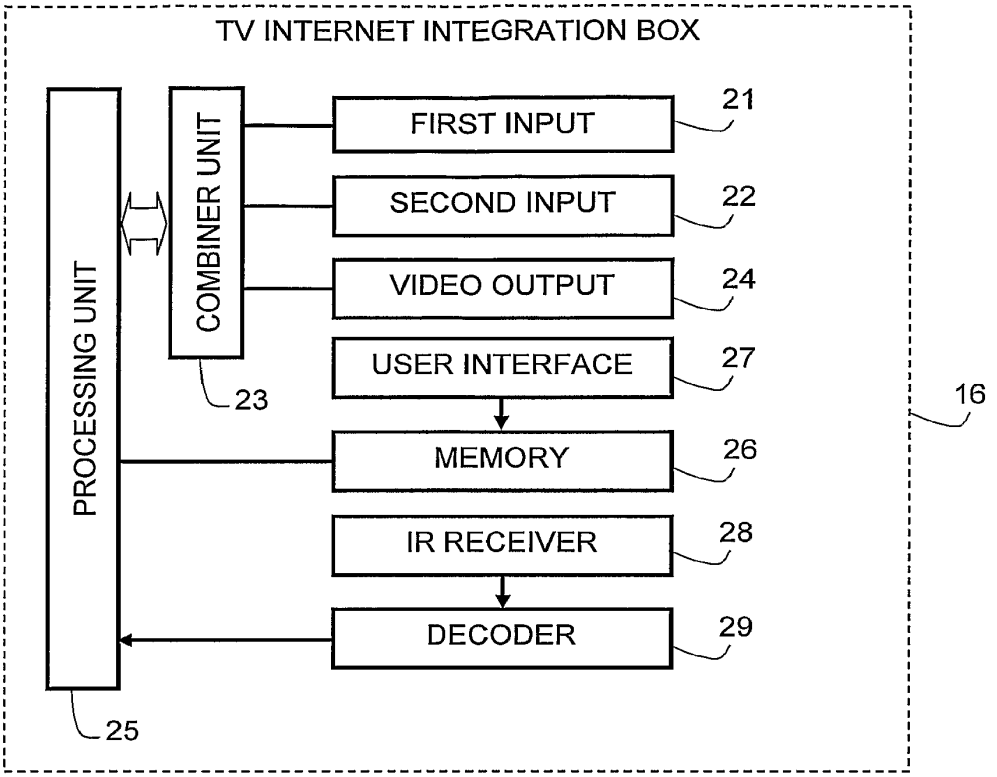
TV INTERNET INTEGRATION BOX
PROCESSING UNIT
COMBINER UNIT
FIRST INPUT
SECOND INPUT
VIDEO OUTPUT
USER INTERFACE
MEMORY
IR RECEIVER
DECODER
21
22
24
27
26
28
29
23
25
16

FIG. 5

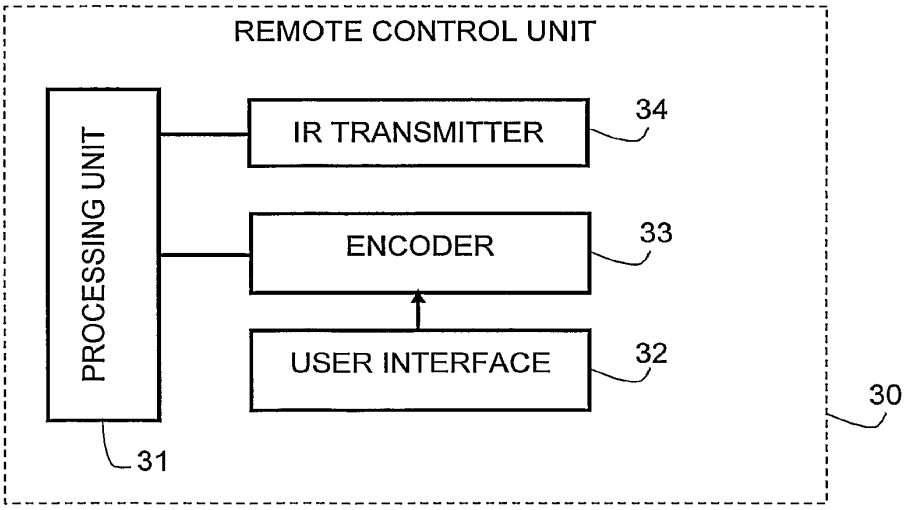
REMOTE CONTROL UNIT
PROCESSING UNIT
IR TRANSMITTER
ENCODER
USER INTERFACE
34
33
32
31
30

FIG. 6

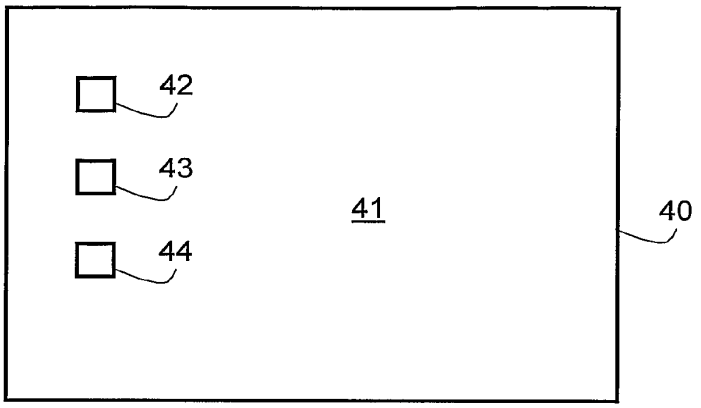

FIG. 7a

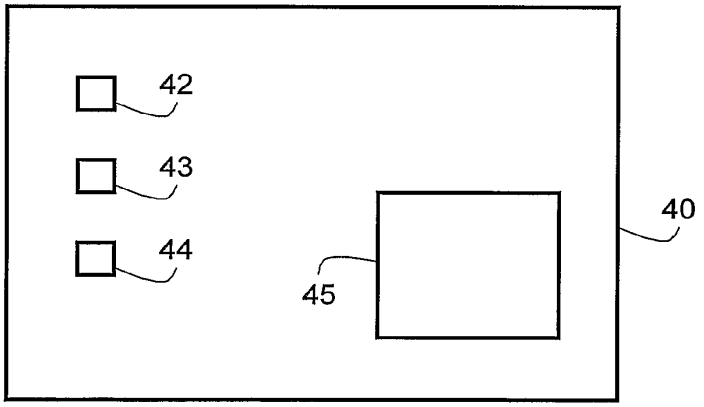

FIG. 7b

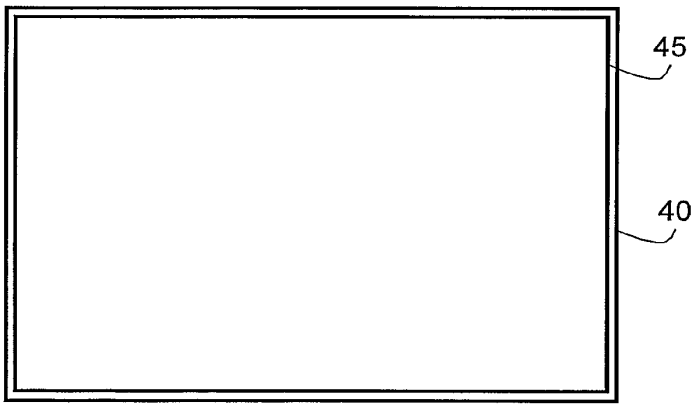

FIG. 7c

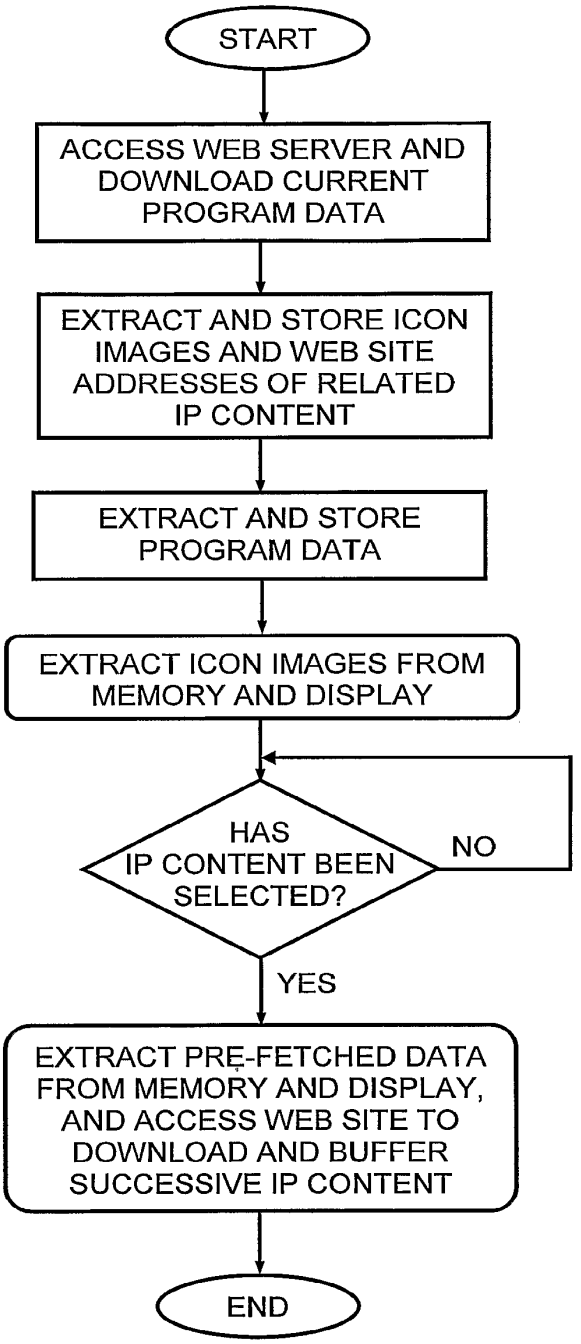
START
ACCESS WEB SERVER AND DOWNLOAD CURRENT PROGRAM DATA
EXTRACT AND STORE ICON IMAGES AND WEB SITE ADDRESSES OF RELATED IP CONTENT
EXTRACT AND STORE PROGRAM DATA
EXTRACT ICON IMAGES FROM MEMORY AND DISPLAY
HAS IP CONTENT BEEN SELECTED?
NO
YES
EXTRACT PRE-FETCHED DATA FROM MEMORY AND DISPLAY, AND ACCESS WEB SITE TO DOWNLOAD AND BUFFER SUCCESSIVE IP CONTENT
END

FIG. 8

INTEGRATING, AT USER'S PREMISES, TV CHANNEL FORMAT MATERIAL WITH IP FORMAT MATERIAL THROUGH OVERLAYS

This is a Continuation Application filed under 35 U.S.C. §120 as a continuation of U.S. patent application Ser. No. 11/794,825, filed on Jul. 6, 2007, which was a National Phase under 35 U.S.C. §371 of International Application No. PCT/IL2005/000035, filed on Jan. 11, 2005, the content of each of which is hereby incorporated by reference in their entirety.

FIELD OF THE INVENTION

This invention relates to the broadcast of audio/video content over the TV infrastructure and Internet.

BACKGROUND OF THE INVENTION

With the proliferation of cable TV and the high bandwidth currently available for the Internet, which promises to increase even more in the near future, Internet TV is fast becoming a viable alternative to regular and cable TV broadcast channels. Moreover, Internet TV is not subject to the government licensing laws required by cable and broadcast TV channels and thus offers programs that may not be obtainable using regular and cable TV broadcast channels.

It is not uncommon for Internet broadcasters to offer near DVD-quality movies that can be viewed either using video streaming or downloaded to the hard disk of a subscriber's computer for viewing "off-line". The video quality of such movies is vastly superior to that obtainable on a regular TV set, owing to the high resolution associated with computer displays that cannot presently be matched by TV screens. However, this is not particularly troublesome where only pictures are displayed; but it becomes a problem when textual information is displayed that is formatted for high resolution computer monitors since the text is then barely legible when displayed on lower resolution TV screens. Thus, if a regular TV set is used to display Internet content that is rich in text, the resulting display quality is poor.

It would therefore be a significant benefit to users of low resolution displays such as TV screens, to be able to watch regular and cable TV broadcasts and to integrate with Internet content on demand. In particular, it would be desirable to provide such a user with a visual and legible indication when viewing a regular or TV broadcast of available Internet movies or other programs and allow him to use the displayed indication to integrate with a desired Internet broadcast.

These requirements have been only partially addressed in the art. WO 00/08855 to United Video Properties, Inc. and entitled "A system and method for synchronizing television-related product content and internet-delivered information" describes a screen generator that merges program guide data with a TV image and superimposes an Interactive TV Guide on the regular TV image.

US 2002/0093594 (Kikinis) entitled "Method and system for identifying addressing data within a television presentation" illustrates in FIG. **5** the common connection of TV and Internet to a set-top box.

U.S. Pat. No. 6,606,746 to OpenTV, Inc. entitled "Interactive television system and method for displaying a graphical user interface using insert pictures" discloses interactive television having a compressed background picture and one or more compressed insert pictures commonly connected to a TV-Internet Integration box. The compressed insert pictures represent items of a GUI. The local system i.e. computer "pastes" the insert pictures into the background image.

U.S. Pat. No. 6,130,898 to Bell Atlantic Network Services, Inc., entitled "Simulcasting digital video programs for broadcast and interactive services" teaches an interactive TV system where TV broadcast data is merged with Internet data. To this end, public wireless packet data network is combined with a broadband digital broadcast network at a plurality of transmitter sites. Customer premises receiving systems include a receiving antenna and one or more digital entertainment terminals. The terminal includes a channel selector and digital receiver for capturing a digital transport stream from a selected channel. A processor converts selected program information from the transport stream for presentation, e.g. via a television set. The terminal also includes a CPU controlling the operation of the channel selector and the processor in response to user inputs.

None of these references appears to disclose the ability to merge broadcast TV signals with IP packet data at a customer site, specifically in such a manner that a conventional TV set is able to display Internet program selection data while viewing a TV broadcast program and to use the selected data to select an Internet channel, such as a movie, for display on the TV set instead of the TV broadcast program.

SUMMARY OF THE INVENTION

It is therefore an object of the present invention to provide a TV-Internet Integration Box having the ability to merge broadcast TV signals with IP packet data at a customer site.

It is a further object that such a TV-Internet Integration Box permits a TV set connected thereto to display Internet program selection data while viewing a TV broadcast program and to use the selected data to select an Internet movie for display instead of the TV broadcast program.

These objectives are realized in accordance with a first aspect of the invention by a method for facilitating first data broadcast over a TV subscriber channel to be displayed simultaneously together with second data broadcast over a digital data communications network, the method comprising:

receiving said first data and said second data;

combining said first data and said second data to form a combined video signal; and

conveying said combined video signal to a TV set in a user premises for displaying a first image corresponding to the first data and having superimposed thereon a second image corresponding to the second data, said second image being configured to allow a user at said user premises to interact therewith for redirecting to the digital data communications network and displaying a program broadcast thereby in at least a portion of the TV set.

In accordance with a second aspect of the invention there is provided a method for facilitating first data broadcast over a TV subscriber channel to be displayed simultaneously together with second data broadcast over a digital data communications network, the method comprising:

receiving said first data at a user premises;

receiving said second data at the user premises according to a user-profile associated with the second data;

combining said first data and said second data to form a combined video signal; and

conveying said combined video signal to a TV set in a user premises for displaying a first image corresponding to the first data and having superimposed thereon a second image corresponding to the second data, said second image being configured to allow a user at said user premises to interact there-

with for redirecting to the digital data communications network and displaying a program broadcast thereby in at least a portion of the TV set.

BRIEF DESCRIPTION OF THE DRAWINGS

In order to understand the invention and to see how it may be carried out in practice, a preferred embodiment will now be described, by way of non-limiting example only, with reference to the accompanying drawings, in which:

FIG. **1** is pictorial representation showing a TV-Internet Integration Box according to the invention connected to a mixed broadcast network for combining Internet and broadcast TV signals;

FIG. **2** is a flow diagram showing the principal actions carried out by the web server shown in FIG. **1**;

FIG. **3** is a flow diagram showing the principal actions carried out by the TV-Internet Integration Box shown in FIG. **1**;

FIG. **4** is a flow diagram showing the principal actions carried out by an IP content provider such as an advertiser for creating IP content for overlaying by the TV-Internet Integration Box with a broadcast TV signal;

FIG. **5** is a block diagram showing the functionality of the TV-Internet Integration Box shown in FIG. **1**;

FIG. **6** is a block diagram showing the functionality of a remote control unit for interfacing with the TV-Internet Integration Box shown in FIG. **5**;

FIGS. **7***a*, **7***b* and **7***c* are pictorial representations showing a TV set during different stages of receiving and displaying combined Internet and broadcast TV signals; and

FIG. **8** is a flow diagram showing the principal actions carried out by the TV-Internet Integration Box when pre-fetching a digital broadcast signal.

DETAILED DESCRIPTION OF EXEMPLARY EMBODIMENTS

FIG. **1** is pictorial representation showing a mixed broadcast network **10** having a Cable TV Box **11** coupled to a satellite **12** and a Cable TV transmitter **13** for receiving a cable TV broadcast signal (constituting first data). An Internet broadcast signal comprising IP packet data (constituting second data) is streamed from a web server **14** via the Internet **15** (constituting a digital data communications network) to a TV-Internet Integration Box **16** for display on a TV set **17** coupled thereto. The TV set **17** may be constituted by a computer having a video card and a high resolution display monitor. However, the principal benefit of the invention is obtained when a regular TV set having low resolution is used, since such a configuration has not so far been used to integrate Internet programs with conventional TV broadcasts in the manner proposed by the invention. The TV-Internet Integration Box **16** is connected to the Cable TV Box **11** for combining the broadcast TV signals received by the Cable TV Box **11** with the IP packet data broadcast via the Internet **15**. Also shown is an advertiser **18** having a computer coupled to the Internet **15** for downloading advertising content to the web server **14** for storage in a database **19** and a telephone **20** coupled to the TV-Internet Integration Box **16** for feeding telephony signals to the TV-Internet Integration Box **16**, which combines the received telephony signals with video data received from the Cable TV Box **11** and/or the Internet **15**.

The advertiser **18** typically pays for specific time slots and for one or more specific channels during which his advertisement will be broadcast. Thus, in addition to the advertising content which is prepared and then stored on the web server **14** in known manner, the advertiser **18** also specifies when the advertisement is to be broadcast and on which TV channel or channels. By such means, a sports advertiser can request time during the interval of a football match to broadcast a commercial, while a toy advertiser would obviously prefer to broadcast a commercial during a children's TV program. Different time slots may be charged out at different rates depending on the ratings associated with the associated TV program. After selecting one or more time slots, the advertisement content as well as the selected time slots and program data are stored in the database **19** accessed by the web server **14**.

FIG. **2** is a flow diagram showing the principal actions carried out by the web server **14**, which is responsive to an event timetable stored and updated in the database **19**. To this end, an IP content provider interfaces with the web server for creating IP content and associating therewith calendar and program data indicating dates, times and channels in respect of which the IP content is to be streamed to the customer premises. Once this is done, the web server **14** monitors events, which are triggered in known manner causing the web server **14** to extract from the database **19** pre-stored IP content for streaming over the Internet **15** to the TV-Internet Integration Box **16**, where it is processed as described below with reference to FIG. **3** of the drawings.

FIG. **3** is a flow diagram showing the principal actions carried out by the TV-Internet Integration Box **16**. In accordance with one embodiment of the invention, the subscriber selects what kind of IP content he wishes to receive and in respect of which program details, such as icons and/or textual data, are to be displayed together with the TV broadcast data. For example, a subscriber may wish to block certain types of program material or may wish to receives details thereof only during limited hours, for example when the children are asleep. To this end, the subscriber is able to program the TV-Internet Integration Box **16** in much the same way that a video cassette recorder is programmed so as to store in the memory **25** a timetable indicating what type of IP data is to be displayed and when. The timetable is updated as and when required by the subscriber. The TV-Internet Integration Box **16** is adapted to check the timetable periodically and to filter out incoming IP content that is either of a type that is not required or that is broadcast during an unauthorized time window. By such means, an additional layer of authorization may be provided to that stored in the database **19** for access by the web server **14**, thus allowing pre-fetching of IP content and storage in the memory **25** of the TV-Internet Integration Box **16**. Upon detecting a matching event, corresponding to received IP content that is of interest to the subscriber, the TV-Internet Integration Box **16** overlays the matched IP content with the current broadcast and displays the new integrated video on the subscriber's TV set **17**. For example, the matched information may be an icon that indicates to the subscriber that an Internet movie is currently being broadcast; or it may be an advertisement or information related to the TV program being broadcast.

The subscriber can respond to the overlaid data using a remote control unit, described below with reference to FIG. **6** of the drawings, which is programmed to interact with the displayed icon or other data that is overlaid on the TV broadcast. To this end, the displayed IP content may optionally contain textual information advising the subscriber to press a particular button on the remote control unit. Alternatively, buttons on the remote control unit may be color-coded and the icon may be colored so as to indicate to the subscriber which color-coded button to press for selection of the corresponding

IP content. If the subscriber responds to the overlaid data by pressing a button on the remote control unit, the TV-Internet Integration Box **16** receives the signal from the remote control unit and changes the priorities for use with the Picture-in-Picture (PIP) technique to display the TV broadcast in a reduced window and to show the other media, i.e. the IP content, in an enlarged window. The IP content can be a custom designed web page for TV, or a game or advertisement movie or any other information placed on the matched record. PIP techniques are known per se and allow a video or graphics image to be inserted on top of a movie clip and to be positioned and sized. An Effect In and Effect Out may be used to fade or move the inserted video to the screen. In accordance with one such technique, the bulk of the IP content e.g. corresponding to a movie may be rendered transparent so as to provide a transparent window through which an icon e.g. relating to the movie is visible. The video content of the TV broadcast is displayed in one window and the IP content in another window. Since the bulk of the IP content is transparent it will remain invisible to the subscriber, while the icon (or text) will be visible since it is opaque. On selecting the displayed icon, the attributes may simply be reversed so as to hide the icon while displaying the movie or other content. At the same time, the TV broadcast may be re-sized either to display it in a minimized window it the case that it is to be suppressed altogether, or to display it superimposed on the IP content so that both are visible at the same time in different, possibly overlapping, windows.

FIG. **4** is a flow diagram showing the principal actions carried out by an IP content provider such as an advertiser for creating IP content for overlaying by the TV-Internet Integration Box with a broadcast TV signal. Thus, the advertiser designs an advertisement and sends it together with a request to a web site link via the Internet or off-line as required. Since the IP content is intended for display on a low resolution TV screen, any textual information that forms part of the IP content is formatted so as to be legible when displayed on lower resolution TV screens. Generally, this requires reducing the quantity of textual information to a minimum and sizing any text so that it is legible. Often, a web advertiser will wish to create an on-line advertisement based on an existing web page. In such case, it may be necessary to reduce and resize any textual information so as to comply with these requirements.

The request specifies calendar and program data as explained above, which the web site operator checks for availability and type, defining to which group of users it belongs. If the required time slots are available for the requested channels, the site operator confirms the request and forwards the request to the web control room for final confirmation. On confirming the request, a status flag of the advertisement is changed so as to indicate that the advertisement is awaiting final confirmation from the web control room. At the web control room the advertisement is checked for content by human evaluators who either approve or reject the advertisement content and, in the case of rejection, may provide reasons therefore. If the advertisement (or other IP content) is approved by the web control center, its status is set to "approved" and the web control center bills the customer and the web site operator adds the advertisement and the scheduling information to the database **19**. The customer who is billed is typically the advertiser but may be any entity that is identified by a digital signature associated with the advertisement. If either of the requests for approval is rejected the status of the advertisement is set to "rejected" and the web control room informs the advertiser of the grounds for rejection, allowing the advertiser to change the request and re-send to the web site operator. Optionally, in such case the web server may be adapted to display to the advertiser the occupied timetable and suggest new timetable. Only those advertisements whose status flag indicates that they are approved by the web control room are actually available for transmission. The time slot and channel information associated with any advertisement that is not so approved remain available for other advertisements and will be shown as available to another advertiser who attempts to schedule an advertisement. Only when the advertisement is actually approved by the web site operator and its status is updated accordingly, are the transmission time and channel locked for use by other users.

The IP packet data may optionally be associated with predefined user-profiles that are also stored in the database **19** so that the advertisement or other IP data is sent only to specific TV-Internet Integration Boxes. Such user-profiles may be configured by the advertiser or by the user. Thus, for example, the invention allows supplementary or complementary program content to be associated with a TV broadcast, while providing the facility to view the supplementary program content only to specific subscribers, according to their user-profiles.

Thus, by way of non-limiting example, the invention allows sign language to be associated with a TV broadcast for the hard of hearing. It is known to display sign language in a corner of the screen, but since this is usually done indiscriminately it also apt to disturb the majority of viewers who do not need the sign language. The invention may be used to avoid this by conveying the sign language as IP content separate from main TV broadcast and allowing subscribers to register for a "sign language" service so that only registered subscribers receive the IP content. IP content files corresponding to sign language to be associated with different TV broadcasts are created as explained above, and stored in the database **19** together with user-profile data indicating which subscribers are registered to obtain the service. The user-profile data may contain data that further refines the target audience, such as categories of TV program alongside which the sign language is to be displayed. The user-profile data may further contain geographical data or language data that allows sign language corresponding to a target language to be conveyed to specific audiences. By such means, a TV program can be accompanied by a sign language overlay that is customized to a target language depending on the location of the IP target address or the language requested by the subscriber on registering for the service.

FIG. **5** is a block diagram showing the functionality of the TV-Internet Integration Box **16** shown in FIG. **1**. Thus, the TV-Internet Integration Box **16** comprises a first input **21** for receiving first data corresponding to a TV broadcast signal, typically being a cable TV signal and a second input **22** for receiving respective second data corresponding to IP packet data. The IP packet data may optionally be downloaded to specific TV-Internet Integration Boxes in accordance with predefined user-profiles associated with IP packet data and stored in the database **19**. A combiner unit **23** is coupled to the first and second inputs for combining the first data and the second data to form a combined video signal. A video output **24** is coupled to the combiner unit **23** for conveying the combined video signal to a TV set in a user premises. The TV set may be a conventional TV having a relatively low resolution screen for displaying a first image corresponding to the first data and having superimposed thereon a second image corresponding to the second data. Alternatively, it can be a computer having a video card for displaying a combined video image on a high resolution display monitor.

The combiner unit **23** is shown coupled to a processing unit **25** although in practice it may be implemented in software by the processing unit **25**. A memory **26** is coupled to the processing unit **25** for storing program data, such as profiles and program timetables etc. so as to allow the processing unit **25** to filter incoming IP content according to pre-defined profiles and other selection data. The processing unit **25** is also coupled to a user interface **27** that allows the subscriber to program the TV-Internet Integration Box **16** and store the program data in the memory **26**. An IR receiver **28** is adapted to receive IR commands from a remote control unit described below with reference to FIG. **6** and is coupled to a decoder **29**, which decodes a received IR signal and feeds it to the processing unit **25** for further processing.

FIG. **6** is a block diagram showing the functionality of a remote control unit **30** for interfacing with the TV-Internet Integration Box **16** shown in FIG. **5**. The remote control unit **30** includes a processing unit **31** coupled to a user interface **32**, typically having a keypad or pushbuttons for program selection and setting as well as other functions. The user interface **32** is coupled to an encoder **33** which is responsive to a pressed key or key combination for producing a corresponding IR signal that is transmitted by an IR transmitter **34** to the TV-Internet Integration Box **16** for receipt by the IR receiver **28** thereof.

As noted above, the keys may be color coded in correspondence with pre-arranged colors of commonly displayed icons, so that pressing on a specific key activates the displayed icon of the same color. Alternatively, at least some of the keys may be covered with transfers depicting commonly displayed icons, whereupon the appropriate keys or button for activating each icon are easily recognized.

The keys may also be programmed so that depressing the same key more than once automatically re-sizes the windows containing the TV broadcast and the Internet broadcast. For example, FIG. **7***a* shows the default situation where a TV screen **40** displays a conventional TV broadcast in a window **41** that is sized to occupy the whole area of the TV screen **40** and will be referred to as the primary window. Also shown are IP icons **42**, **43** and **44** each of which points to a different IP content that is streamed from a respective web site of known address. On pressing the key on the remote control unit **30** that corresponds to the icon **42**, the IP content corresponding thereto is displayed within a small window **45** (referred to as the secondary window) that is contained within the primary window **41** as shown in FIG. **7***d*. The icons **42**, **43** and **44** remain visible so that, if desired, the selected program can be changed by pressing a different key on the remote control unit **30**. On pressing a key a second time in succession, the IP content is re-sized so that its window **45** occupies substantially the whole area of the screen as shown in FIG. **7***c*. On pressing the key a third time in succession, the situation reverts to the default shown in FIG. **7***a* where the primary window **41** containing the TV broadcast occupies the whole area of the TV screen **40**. Thus, each key operates as a three-way toggle that switches between three different display modes.

The second data containing display information for the icons also contains data that informs the TV-Internet Integration Box **16** on which channel or channels the associated IP content is to be streamed and at what times. The second data also specifies the web site where the IP content is located. This is summarized in the following table:

TABLE I

Second data - definition			
Icon image	Channel	Time	Website of IP content
ICON.GIF	2; 23	19:30; 21:30	www.AB.com/adverts/123.htm

Thus, the second data depicted in Table I above shows that the icon image is contained in a file called ICON.GIF and that the IP content relating thereto is to be streamed on channels 2 and 23 at times 19:30 and 21:30, these being the start times. The end times are determined by the duration of the IP content to be streamed, which is downloaded from a web site whose name is shown in the table and is contained in the second data.

The second data is downloaded from the web server **14** whose web site address is known to the TV-Internet Integration Box **16**. In accordance with one embodiment, the processing unit **25** is programmed to access the web server **14** periodically and download current program data. For example, once every 2 to 3 hours the TV-Internet Integration Box **16** may automatically access the web server **14** to download the second data corresponding current program data for the next 3 hours as formatted according to Table I. The downloaded information is stored locally in the memory **26** of the TV-Internet Integration Box **16**. This allows the TV-Internet Integration Box **16** to pre-fetch IP content relating to all the currently displayed icons and to store the data relating thereto in the memory **26** thus obviating the need to access the web site of a selected icon for the purpose of downloading IP selected content. Since this carries the overhead of web access and downloading of data, which can be cumbersome particularly if there is insufficient bandwidth, pre-fetching in this manner ensures that initial IP content data will be immediately available on selection of one of the icons.

FIG. **8** is a flow diagram showing the principal actions carried out by the TV-Internet Integration Box when pre-fetching a digital broadcast signal. Thus, the TV-Internet Integration Box **16** periodically accesses the web server **14** and downloads current program data, constituting the second data. It then extracts from the current program data the image files of the current icons and stores them in the memory **26**. In like manner, it extracts the web sites of the IP content corresponding to the currently displayed icons and then accesses these sites to pre-fetch the respective IP content, which it likewise stores in the memory **26**. On selection of an icon, the TV-Internet Integration Box **16** opens a secondary window **45** within the primary window **41**, reads from the memory **26** the pre-fetched IP content and displays it in the secondary window **45**.

It will be understood that the TV-Internet Integration Box according to the invention may be at least partially implemented by a suitably programmed computer. Likewise, the invention contemplates a computer program being readable by a computer for executing the method of the invention. The invention further contemplates a machine-readable memory tangibly embodying a program of instructions executable by the machine for executing the method of the invention.

The invention claimed is:

1. A TV-Internet Integration circuit configured to combine, at a user's premises, TV channel video with Internet Protocol (IP) material selected by the user through overlays displayed at the user's premises in response to an overlay activation signal that the user has selected, said circuit comprising:

a TV screen at the user's premises configured to display video in response to display drive signals;

a combiner circuit at the user's premises having a first input for receiving the TV channel video, a second input for receiving the IP material, and an output for outputting display drive signals to the TV screen;

wherein (i) as received by the combiner circuit at the user's premises, the TV channel video conforms to a TV broadcast format standard, and (ii) a received by the combiner circuit at the user's premises, the IP material conforms to an IP format standard that is different from the TV broadcast format standard and is received via a path different from that for the TV channel video at least in part;

a memory circuit operatively associated with the combiner circuit and configured to store, at the user's premises, plural overlays each associated with respective IP material;

said combiner circuit being configured to selectively generate display drive signals causing the TV screen to display the TV channel video received at the first input and, further, to selectively process at the user's premises an overlay activation signal;

said combiner circuit being further configured to respond to the processing of the overlay activation signal by obtaining the overlays from the memory circuit and generating display drive signals causing the TV screen to display the overlays;

said combiner circuit being still further configured to respond to a user selection of one of the displayed overlays to generate display drive signals causing the TV screen to display the IP material associated with the selected overlay and received at the second input;

wherein depending on user selection at the user's premises the TV screen displays, at respective times, the TV channel video received at the first input, the overlays, and the IP material that the user has selected through the displayed overlays.

2. The TV-Internet Integration circuit of claim **1** in which the combiner circuit is configured to generate display drive signals causing the TV display to display the overlays over a display of the TV channel video on the TV screen.

3. The TV-Internet Integration circuit of claim **1** in which the combiner circuit is configured to generate display drive signals causing the TV display to display the overlays in respective plural windows on the TV screen while the screen is displaying the TV channel video.

4. The TV-Internet Integration circuit of claim **1** in which the combiner circuit is configured to generate the overlay activation signal through testing if specified conditions match contents of the memory circuit.

5. The TV-Internet Integration circuit of claim **1** in which the combiner circuit is configured to pre-fetch overlays and store them in the memory circuit for later display on the screen.

6. The TV-Internet Integration circuit of claim **1** in which the combiner circuit is configured to pre-fetch IP material and store the pre-fetched material in the memory circuit for later display on the screen.

7. The TV-Internet Integration circuit of claim **1** including a set top box configured to decode the TV channel video and supply decoded TV channel video to the first input of the combiner circuit.

8. The TV-Internet Integration circuit of claim **1** in which the combiner circuit is configured to selectively process at the user's premises an overlay activation signal per input froth the user.

9. The TV-Internet Integration circuit of claim **1** in which the combiner circuit is configured to cause the screen to display at least one of the overlays in response to a special overlay activation signal from an external source timed relative to an event in the TV channel video displayed on the screen.

10. The TV-Internet Integration circuit of claim **1** in which the combiner circuit is configured to cause the screen to display overlays that point to sources of IP material but not to specific IP material.

11. The TV-Internet Integration circuit of claim **7** in which the IP material path bypasses the set top box.

12. A TV-Internet Integration process combining, at a user's premises, TV channel video with Internet Protocol (IP) material selected by the user through overlays displayed at the user's premises in response to an overlay activation signal that the user has selected, said process comprising:

providing a combiner circuit at the user's premises having a first input for receiving the TV channel video, a second input for receiving the IP material, and an output for outputting display drive signals to the TV screen;

wherein (i) as received by the combiner circuit at the user's premises, the TV channel video conforms to a TV broadcast format standard, and (ii) as received by the combiner circuit at the user's premises, the IP material conforms to an IP format standard that is different from the TV broadcast format standard and is received via a path different from that for the TV channel video at least in part;

storing in a memory circuit at the user's premises, plural overlays each associated with respective IP material;

selectively generating display drive signals causing a TV screen to display the TV channel video received at the first input;

selectively processing at the user's premises an overlay activation signal;

responding to the processing of the overlay activation signal by obtaining the overlays from the memory circuit and generating display drive signals causing the TV screen to display the overlays;

responding to a user selection of one of the displayed overlays by causing the combiner circuit to generate display drive signals causing the TV screen to display the IP material associated with the selected overlay and received at the second input;

wherein depending on user selection at the user's premises the TV screen displays, at respective times, the TV channel video received in the first input, the overlays, and the IP material thin the user has selected through the displayed overlays.

13. The TV-Internet Integration process of claim **12** in which the display drive signals cause the TV display to display the overlays over a display of the TV Channel video on the TV screen.

14. The TV-Internet Integration process of claim **12** in which the display drive signals cause the TV display to display the overlays in respective plural windows on the TV screen while the screen is displaying the TV channel video.

15. The TV-Internet Integration process of claim **12** in which the overlay activation signal is generated as a function of testing if specified conditions at the user's premises match contents of the memory circuit.

16. The TV-Internet Integration process of claim **12** including pre-fetching overlays and storing them in a memory circuit at the user's premises for later display on the screen.

17. The TV-Internet Integration process of claim **12** including pre-fetching IP material and storing the pre-fetched material in a memory circuit at the user's premises for later display on the screen.

18. The Tv-Internet Integration process of claim **12** including providing a set top box decoding the TV channel video and supplying decoded TV channel video to the first input of the combiner circuit.

19. The TV-Internet Integration process of claim **12** in which the screen displays at least one of the overlays in response to a special overlay activation signal from an external source timed relative to an event in the TV channel video displayed on the screen.

20. The TV-Internet Integration process of claim **12** in which the screen displays overlays that point to sources of IP material but not to specific IP material.

21. The TV-Internet Integration process of claim **12** in which the step of selectively processing at the user's premises an overlay activation signal comprises processing per input from the user.

22. The TV-Internet Integration process of claim **18** in which the IP material path bypasses the set top box.

* * * * *

EXHIBIT 3

to Declaration of Charles Cantine in Support of Plaintiff TVnGO's Opening Claim Construction Brief

US009392339B2

(12) **United States Patent**
Merlin

(10) **Patent No.: US 9,392,339 B2**
(45) **Date of Patent: *Jul. 12, 2016**

(54) **TV-INTERNET INTEGRATION CIRCUIT**

(75) Inventor: **Yaakov Merlin**, Raanana (IL)

(73) Assignee: **TVNGO LTD.**, Amsterdam (NL)

(*) Notice: Subject to any disclaimer, the term of this patent is extended or adjusted under 35 U.S.C. 154(b) by 1207 days.

This patent is subject to a terminal disclaimer.

(21) Appl. No.: **13/336,239**

(22) Filed: **Dec. 23, 2011**

(65) **Prior Publication Data**

US 2012/0096507 A1 Apr. 19, 2012

Related U.S. Application Data

(63) Continuation of application No. 11/794,825, filed as application No. PCT/IL2005/000035 on Jan. 11, 2005, now Pat. No. 8,132,220.

(51) **Int. Cl.**

H04N 21/643	(2011.01)
H04N 21/431	(2011.01)
H04N 21/438	(2011.01)
H04N 21/443	(2011.01)
H04N 21/462	(2011.01)
H04N 21/4782	(2011.01)

(52) **U.S. Cl.**

CPC ***H04N 21/64322*** (2013.01); ***H04N 21/4316*** (2013.01); ***H04N 21/4381*** (2013.01); ***H04N 21/4438*** (2013.01); ***H04N 21/4622*** (2013.01); ***H04N 21/4782*** (2013.01)

(58) **Field of Classification Search**

None

See application file for complete search history.

(56) **References Cited**

U.S. PATENT DOCUMENTS

6,136,898	A	10/2000	Loza et al.	
6,240,555	B1	5/2001	Shoff et al.	
6,351,270	B1	2/2002	Nisikawa et al.	
6,606,746	B1	8/2003	Zdepski et al.	
7,124,430	B2 *	10/2006	Aratani et al.	725/142
7,340,457	B1 *	3/2008	Killian et al.	
7,456,902	B2	11/2008	Kikinis	
2002/0007493	A1 *	1/2002	Butler et al.	725/109
2004/0107437	A1 *	6/2004	Reichardt et al.	725/37

FOREIGN PATENT DOCUMENTS

WO	WO 00/08855	2/2000
WO	WO 02/19689 A	3/2002

* cited by examiner

Primary Examiner — Mark D Featherstone

(74) *Attorney, Agent, or Firm* — Cooper & Dunham LLP

(57) **ABSTRACT**

A TV system for displaying TV broadcast signal and Internet signal. Preferably, the TV system is configured to simultaneously or selectively display the TV broadcast signal and Internet signal.

20 Claims, 7 Drawing Sheets

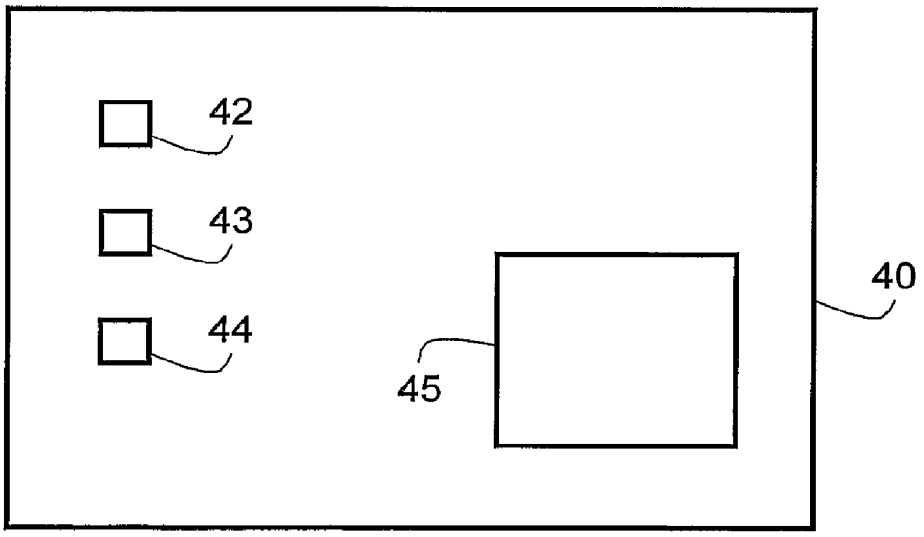

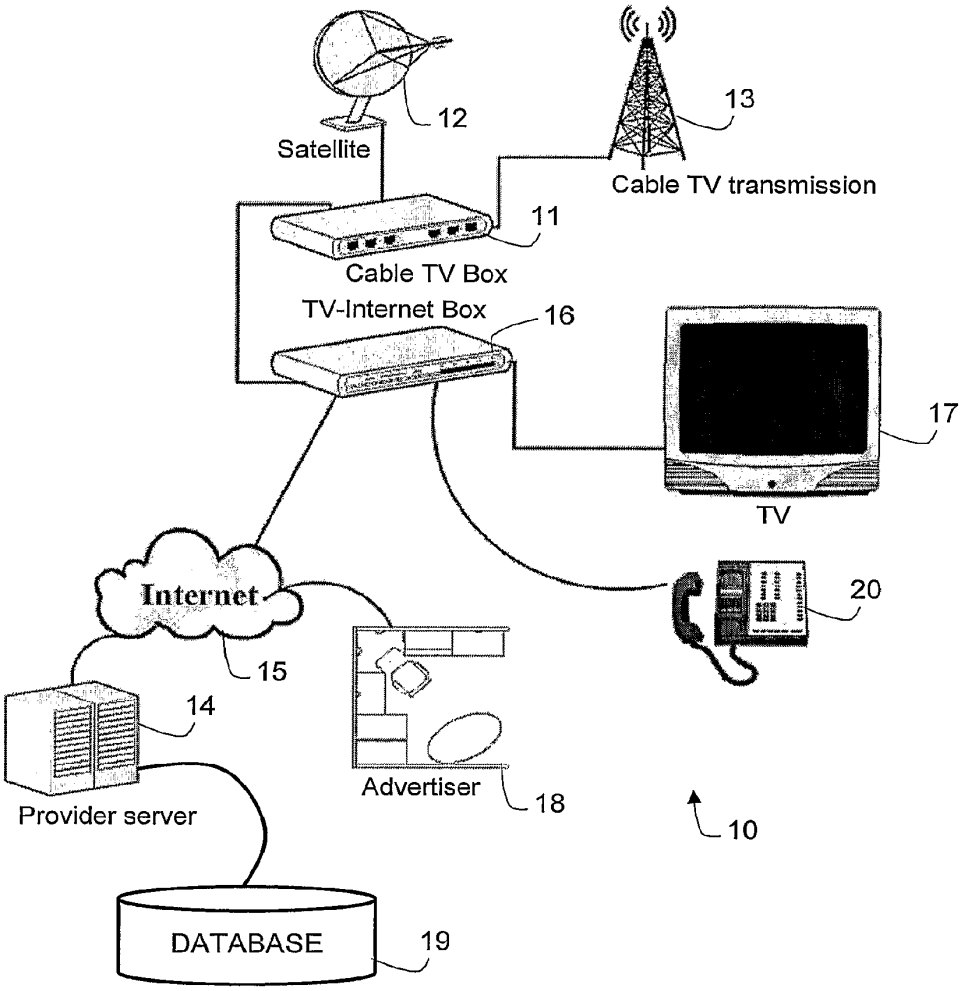
12
Satellite
13
Cable TV transmission
11
Cable TV Box
TV-Internet Box
16
17
TV
Internet
15
20
14
Provider server
Advertiser
18
10
DATABASE
19

FIG. 1

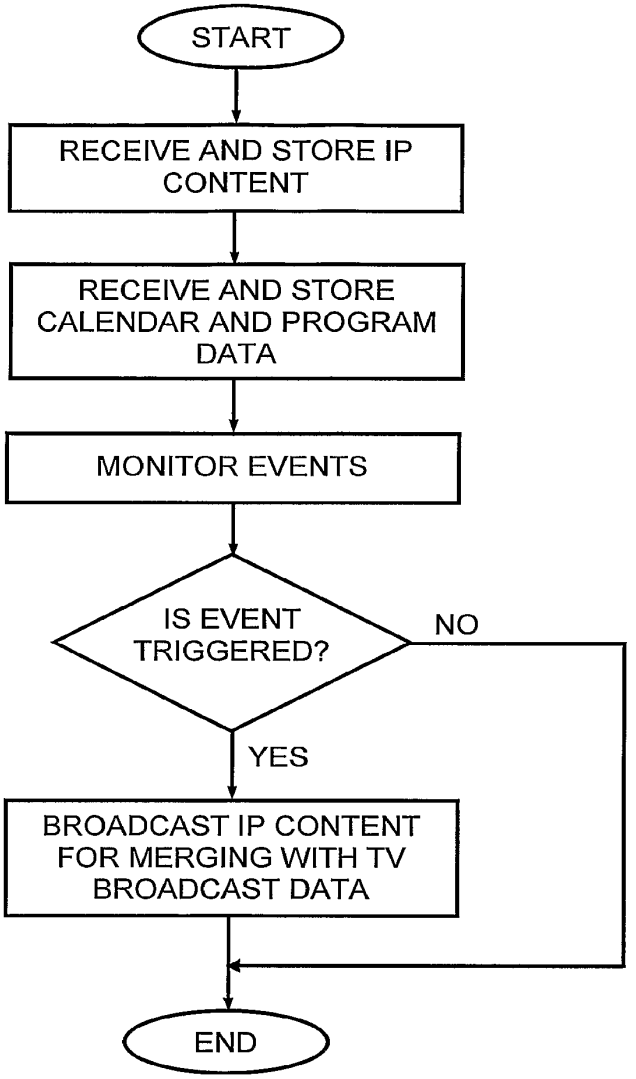
START
RECEIVE AND STORE IP CONTENT
RECEIVE AND STORE CALENDAR AND PROGRAM DATA
MONITOR EVENTS
IS EVENT TRIGGERED?
NO
YES
BROADCAST IP CONTENT FOR MERGING WITH TV BROADCAST DATA
END

FIG. 2

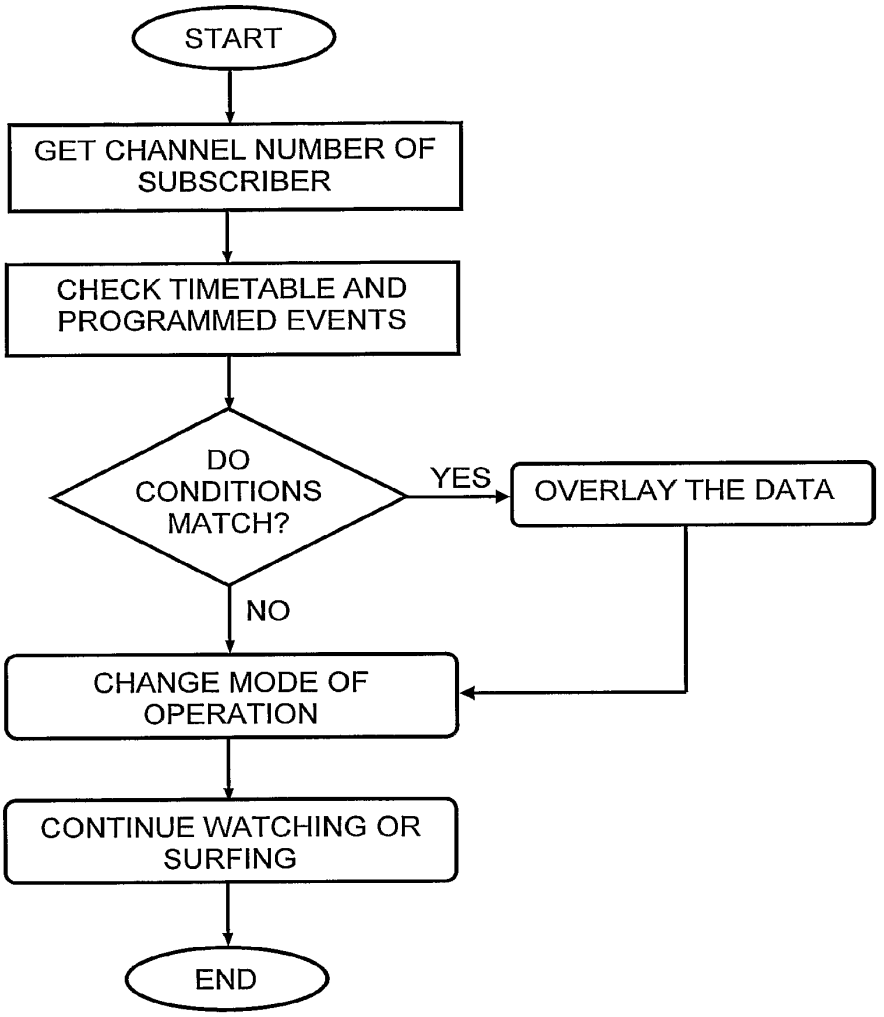
START
GET CHANNEL NUMBER OF SUBSCRIBER
CHECK TIMETABLE AND PROGRAMMED EVENTS
DO CONDITIONS MATCH?
YES
OVERLAY THE DATA
NO
CHANGE MODE OF OPERATION
CONTINUE WATCHING OR SURFING
END

FIG. 3

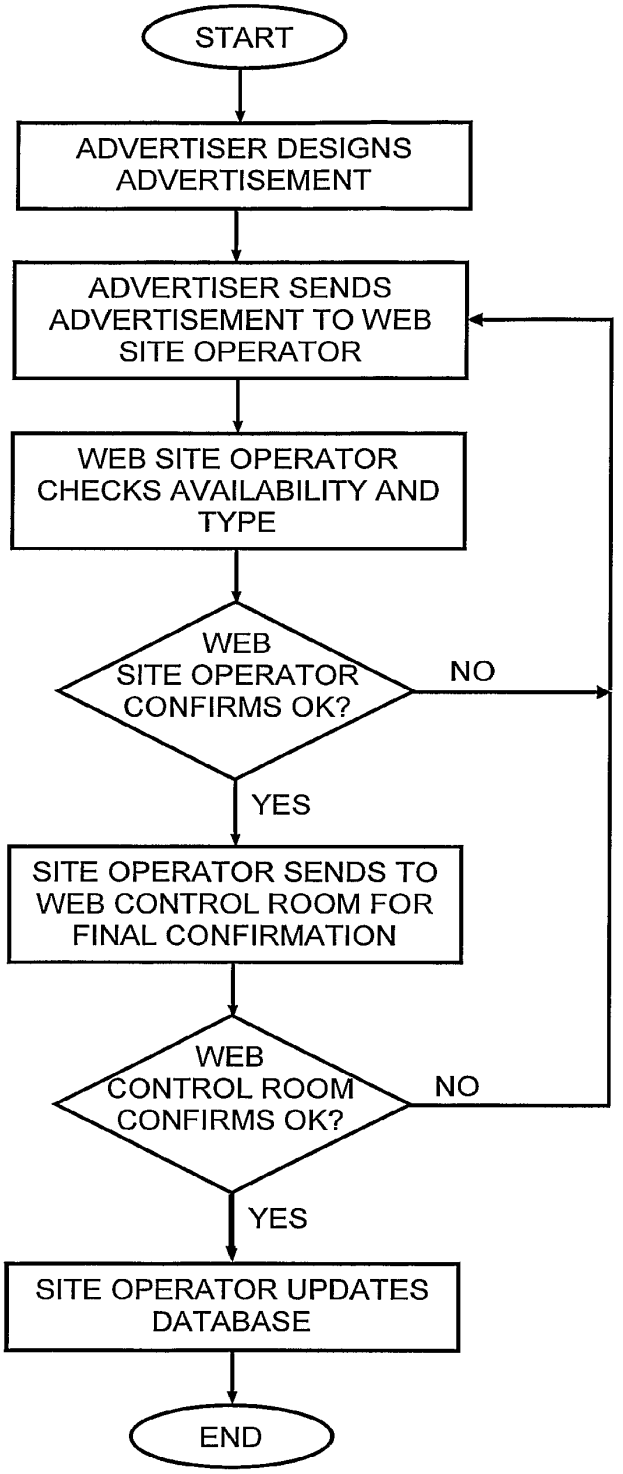
START
ADVERTISER DESIGNS ADVERTISEMENT
ADVERTISER SENDS ADVERTISEMENT TO WEB SITE OPERATOR
WEB SITE OPERATOR CHECKS AVAILABILITY AND TYPE
WEB SITE OPERATOR CONFIRMS OK?
NO
YES
SITE OPERATOR SENDS TO WEB CONTROL ROOM FOR FINAL CONFIRMATION
WEB CONTROL ROOM CONFIRMS OK?
NO
YES
SITE OPERATOR UPDATES DATABASE
END

FIG. 4

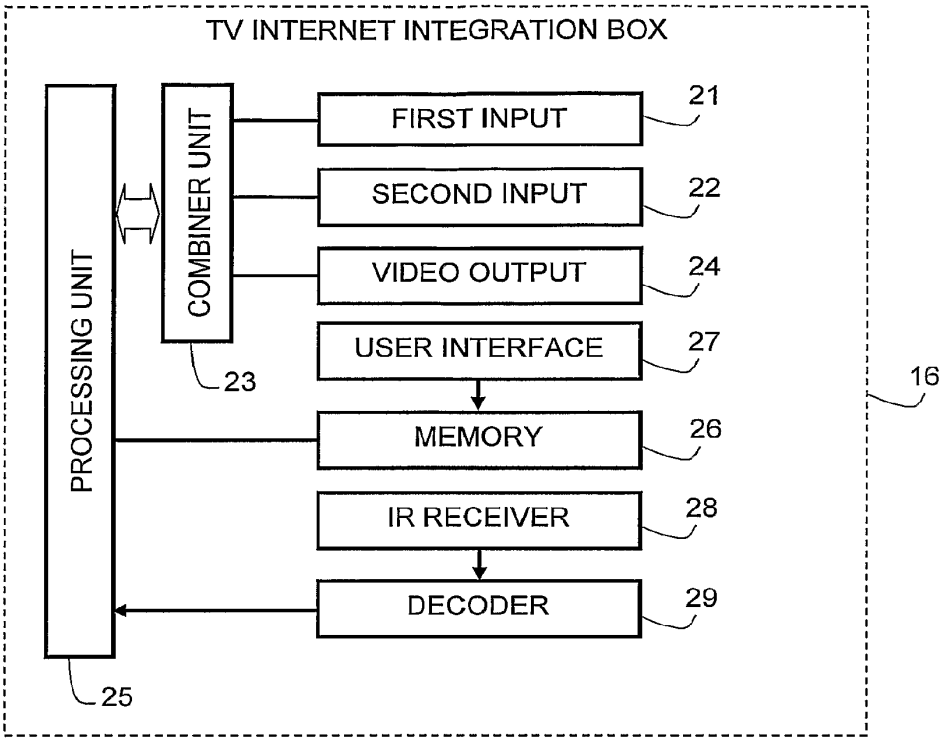
TV INTERNET INTEGRATION BOX
PROCESSING UNIT
COMBINER UNIT
FIRST INPUT
SECOND INPUT
VIDEO OUTPUT
USER INTERFACE
MEMORY
IR RECEIVER
DECODER
21
22
24
27
26
28
29
23
25
16

FIG. 5

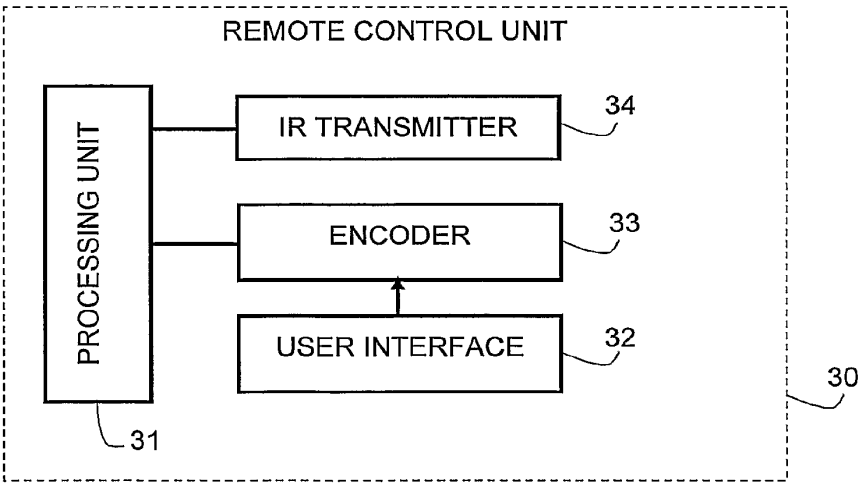
REMOTE CONTROL UNIT
PROCESSING UNIT
IR TRANSMITTER
ENCODER
USER INTERFACE
34
33
32
31
30

FIG. 6

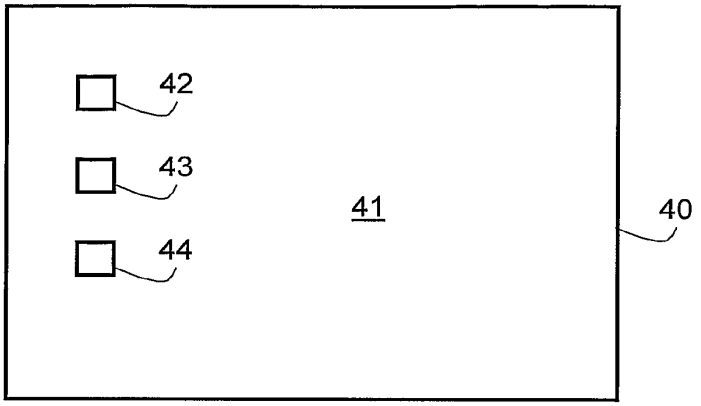

FIG. 7a

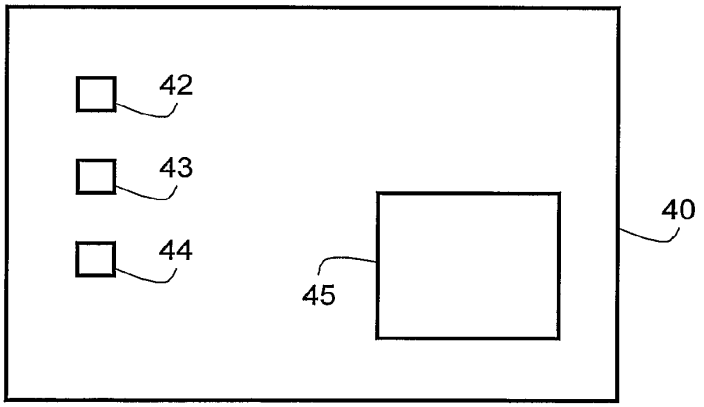

FIG. 7b

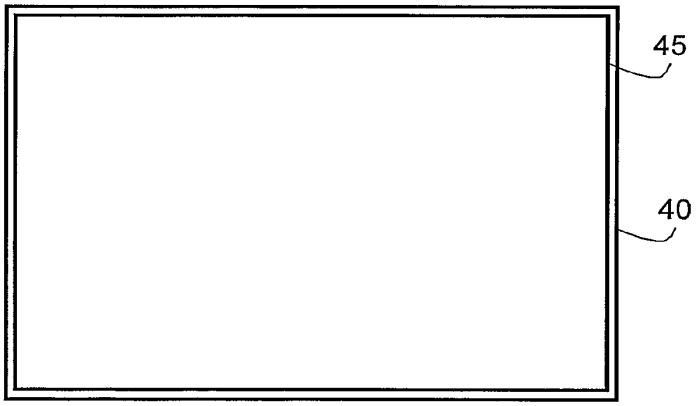

FIG. 7c

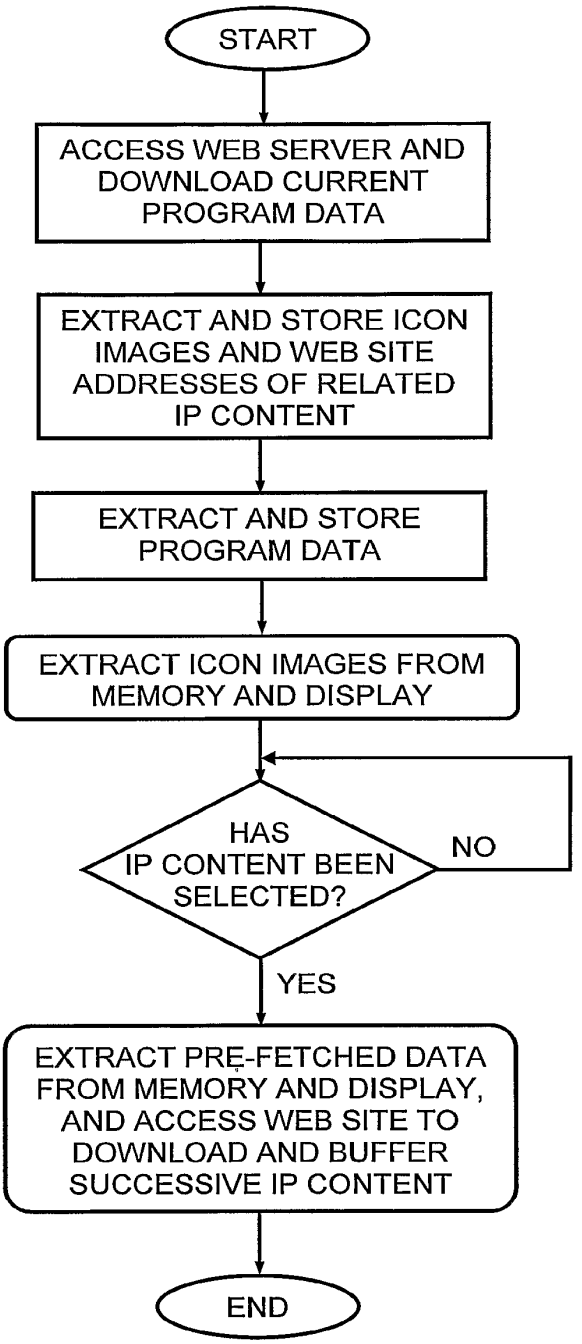
START
ACCESS WEB SERVER AND DOWNLOAD CURRENT PROGRAM DATA
EXTRACT AND STORE ICON IMAGES AND WEB SITE ADDRESSES OF RELATED IP CONTENT
EXTRACT AND STORE PROGRAM DATA
EXTRACT ICON IMAGES FROM MEMORY AND DISPLAY
HAS IP CONTENT BEEN SELECTED?
NO
YES
EXTRACT PRE-FETCHED DATA FROM MEMORY AND DISPLAY, AND ACCESS WEB SITE TO DOWNLOAD AND BUFFER SUCCESSIVE IP CONTENT
END

FIG. 8

TV-INTERNET INTEGRATION CIRCUIT

This is a Continuation Application filed under 35 U.S.C. §120 as a continuation of U.S. patent application Ser. No. 11/794,825, filed on Jul. 6, 2007, which was a National Phase under 35 U.S.C. §371 of International Application No. PCT/IL2005/000035, filed on Jan.11, 2005, the content of each of which is hereby incorporated by reference in their entirety.

FIELD OF THE INVENTION

This invention relates to the broadcast of audio/video content over the TV infrastructure and Internet.

BACKGROUND OF THE INVENTION

With the proliferation of cable TV and the high bandwidth currently available for the Internet, which promises to increase even more in the near future, Internet TV is fast becoming a viable alternative to regular and cable TV broadcast channels. Moreover, Internet TV is not subject to the government licensing laws required by cable and broadcast TV channels and thus offers programs that may not be obtainable using regular and cable TV broadcast channels.

It is not uncommon for Internet broadcasters to offer near DVD-quality movies that can be viewed either using video streaming or downloaded to the hard disk of a subscriber's computer for viewing "off-line". The video quality of such movies is vastly superior to that obtainable on a regular TV set, owing to the high resolution associated with computer displays that cannot presently be matched by TV screens. However, this is not particularly troublesome where only pictures are displayed; but it becomes a problem when textual information is displayed that is formatted for high resolution computer monitors since the text is then barely legible when displayed on lower resolution TV screens. Thus, if a regular TV set is used to display Internet content that is rich in text, the resulting display quality is poor.

It would therefore be a significant benefit to users of low resolution displays such as TV screens, to be able to watch regular and cable TV broadcasts and to integrate with Internet content on demand. In particular, it would be desirable to provide such a user with a visual and legible indication when viewing a regular or TV broadcast of available Internet movies or other programs and allow him to use the displayed indication to integrate with a desired Internet broadcast.

These requirements have been only partially addressed in the art. WO 00/08855 to United Video Properties, Inc. and entitled "A system and method for synchronizing television-related product content and internet-delivered information" describes a screen generator that merges program guide data with a TV image and superimposes an Interactive TV Guide on the regular TV image.

US 2002/0093594 (Kikinis) entitled "Method and system for identifying addressing data within a television presentation" illustrates in FIG. **5** the common connection of TV and Internet to a set-top box.

U.S. Pat. No. 6,606,746 to OpenTV, Inc. entitled "Interactive television system and method for displaying a graphical user interface using insert pictures" discloses interactive television having a compressed background picture and one or more compressed insert pictures commonly connected to a TV-Internet Integration box. The compressed insert pictures represent items of a GUI. The local system i.e. computer "pastes" the insert pictures into the background image.

U.S. Pat. No. 6,130,898 to Bell Atlantic Network Services, Inc., entitled "Simulcasting digital video programs for broadcast and interactive services" teaches an interactive TV system where TV broadcast data is merged with Internet data. To this end, public wireless packet data network is combined with a broadband digital broadcast network at a plurality of transmitter sites. Customer premises receiving systems include a receiving antenna and one or more digital entertainment terminals. The terminal includes a channel selector and digital receiver for capturing a digital transport stream from a selected channel. A processor converts selected program information from the transport stream for presentation, e.g. via a television set. The terminal also includes a CPU controlling the operation of the channel selector and the processor in response to user inputs.

None of these references appears to disclose the ability to merge broadcast TV signals with IP packet data at a customer site, specifically in such a manner that a conventional TV set is able to display Internet program selection data while viewing a TV broadcast program and to use the selected data to select an Internet channel, such as a movie, for display on the TV set instead of the TV broadcast program.

SUMMARY OF THE INVENTION

It is therefore an object of the present invention to provide a TV-Internet Integration Box having the ability to merge broadcast TV signals with IP packet data at a customer site.

It is a further object that such a TV-Internet Integration Box permits a TV set connected thereto to display Internet program selection data while viewing a TV broadcast program and to use the selected data to select an Internet movie for display instead of the TV broadcast program.

These objectives are realized in accordance with a first aspect of the invention by a method for facilitating first data broadcast over a TV subscriber channel to be displayed simultaneously together with second data broadcast over a digital data communications network, the method comprising:

receiving said first data and said second data;

combining said first data and said second data to form a combined video signal; and

conveying said combined video signal to a TV set in a user premises for displaying a first image corresponding to the first data and having superimposed thereon a second image corresponding to the second data, said second image being configured to allow a user at said user premises to interact therewith for redirecting to the digital data communications network and displaying a program broadcast thereby in at least a portion of the TV set.

In accordance with a second aspect of the invention there is provided a method for facilitating first data broadcast over a TV subscriber channel to be displayed simultaneously together with second data broadcast over a digital data communications network, the method comprising:

receiving said first data at a user premises;

receiving said second data at the user premises according to a user-profile associated with the second data;

combining said first data and said second data to form a combined video signal; and

conveying said combined video signal to a TV set in a user premises for displaying a first image corresponding to the first data and having superimposed thereon a second image corresponding to the second data, said second image being configured to allow a user at said user premises to interact therewith for redirecting to the digital data communications network and displaying a program broadcast thereby in at least a portion of the TV set.

BRIEF DESCRIPTION OF THE DRAWINGS

In order to understand the invention and to see how it may be carried out in practice, a preferred embodiment will now be described, by way of non-limiting example only, with reference to the accompanying drawings, in which:

FIG. **1** is pictorial representation showing a TV-Internet Integration Box according to the invention connected to a mixed broadcast network for combining Internet and broadcast TV signals;

FIG. **2** is a flow diagram showing the principal actions carried out by the web server shown in FIG. **1**;

FIG. **3** is a flow diagram showing the principal actions carried out by the TV-Internet Integration Box shown in FIG. **1**;

FIG. **4** is a flow diagram showing the principal actions carried out by an IP content provider such as an advertiser for creating IP content for overlaying by the TV-Internet Integration Box with a broadcast TV signal;

FIG. **5** is a block diagram showing the functionality of the TV-Internet Integration Box shown in FIG. **1**;

FIG. **6** is a block diagram showing the functionality of a remote control unit for interfacing with the TV-Internet Integration Box shown in FIG. **5**;

FIGS. **7***a*, **7***b* and **7***c* are pictorial representations showing a TV set during different stages of receiving and displaying combined Internet and broadcast TV signals; and

FIG. **8** is a flow diagram showing the principal actions carried out by the TV-Internet Integration Box when prefetching a digital broadcast signal.

DETAILED DESCRIPTION OF EXEMPLARY EMBODIMENTS

FIG. **1** is pictorial representation showing a mixed broadcast network **10** having a Cable TV Box **11** coupled to a satellite **12** and a Cable TV transmitter **13** for receiving a cable TV broadcast signal (constituting first data). An Internet broadcast signal comprising IP packet data (constituting second data) is streamed from a web server **14** via the Internet **15** (constituting a digital data communications network) to a TV-Internet Integration Box **16** for display on a TV set **17** coupled thereto. The TV set **17** may be constituted by a computer having a video card and a high resolution display monitor. However, the principal benefit of the invention is obtained when a regular TV set having low resolution is used, since such a configuration has not so far been used to integrate Internet programs with conventional TV broadcasts in the manner proposed by the invention. The TV-Internet Integration Box **16** is connected to the Cable TV Box **11** for combining the broadcast TV signals received by the Cable TV Box **11** with the IP packet data broadcast via the Internet **15**. Also shown is an advertiser **18** having a computer coupled to the Internet **15** for downloading advertising content to the web server **14** for storage in a database **19** and a telephone **20** coupled to the TV-Internet Integration Box **16** for feeding telephony signals to the TV-Internet Integration Box **16**, which combines the received telephony signals with video data received from the Cable TV Box **11** and/or the Internet **15**.

The advertiser **18** typically pays for specific time slots and for one or more specific channels during which his advertisement will be broadcast. Thus, in addition to the advertising content which is prepared and then stored on the web server **14** in known manner, the advertiser **18** also specifies when the advertisement is to be broadcast and on which TV channel or channels. By such means, a sports advertiser can request time during the interval of a football match to broadcast a commercial, while a toy advertiser would obviously prefer to broadcast a commercial during a children's TV program. Different time slots may be charged out at different rates depending on the ratings associated with the associated TV program. After selecting one or more time slots, the advertisement content as well as the selected time slots and program data are stored in the database **19** accessed by the web server **14**.

FIG. **2** is a flow diagram showing the principal actions carried out by the web server **14**, which is responsive to an event timetable stored and updated in the database **19**. To this end, an IP content provider interfaces with the web server for creating IP content and associating therewith calendar and program data indicating dates, times and channels in respect of which the IP content is to be streamed to the customer premises. Once this is done, the web server **14** monitors events, which are triggered in known manner causing the web server **14** to extract from the database **19** pre-stored IP content for streaming over the Internet **15** to the TV-Internet Integration Box **16**, where it is processed as described below with reference to FIG. **3** of the drawings.

FIG. **3** is a flow diagram showing the principal actions carried out by the TV-Internet Integration Box **16**. In accordance with one embodiment of the invention, the subscriber selects what kind of IP content he wishes to receive and in respect of which program details, such as icons and/or textual data, are to be displayed together with the TV broadcast data. For example, a subscriber may wish to block certain types of program material or may wish to receives details thereof only during limited hours, for example when the children are asleep. To this end, the subscriber is able to program the TV-Internet Integration Box **16** in much the same way that a video cassette recorder is programmed so as to store in the memory **25** a timetable indicating what type of IP data is to be displayed and when. The timetable is updated as and when required by the subscriber. The TV-Internet Integration Box **16** is adapted to check the timetable periodically and to filter out incoming IP content that is either of a type that is not required or that is broadcast during an unauthorized time window. By such means, an additional layer of authorization may be provided to that stored in the database **19** for access by the web server **14**, thus allowing pre-fetching of IP content and storage in the memory **25** of the TV-Internet Integration Box **16**. Upon detecting a matching event, corresponding to received IP content that is of interest to the subscriber, the TV-Internet Integration Box **16** overlays the matched IP content with the current broadcast and displays the new integrated video on the subscriber's TV set **17**. For example, the matched information may be an icon that indicates to the subscriber that an Internet movie is currently being broadcast; or it may be an advertisement or information related to the TV program being broadcast.

The subscriber can respond to the overlaid data using a remote control unit, described below with reference to FIG. **6** of the drawings, which is programmed to interact with the displayed icon or other data that is overlaid on the TV broadcast. To this end, the displayed IP content may optionally contain textual information advising the subscriber to press a particular button on the remote control unit. Alternatively, buttons on the remote control unit may be color-coded and the icon may be colored so as to indicate to the subscriber which color-coded button to press for selection of the corresponding IP content. If the subscriber responds to the overlaid data by pressing a button on the remote control unit, the TV-Internet Integration Box **16** receives the signal from the remote control unit and changes the priorities for use with the Picture-

in-Picture (PIP) technique to display the TV broadcast in a reduced window and to show the other media, i.e. the IP content, in an enlarged window. The IP content can be a custom designed web page for TV, or a game or advertisement movie or any other information placed on the matched record. PIP techniques are known per se and allow a video or graphics image to be inserted on top of a movie clip and to be positioned and sized. An Effect In and Effect Out may be used to fade or move the inserted video to the screen. In accordance with one such technique, the bulk of the IP content e.g. corresponding to a movie may be rendered transparent so as to provide a transparent window through which an icon e.g. relating to the movie is visible. The video content of the TV broadcast is displayed in one window and the IP content in another window. Since the bulk of the IP content is transparent it will remain invisible to the subscriber, while the icon (or text) will be visible since it is opaque. On selecting the displayed icon, the attributes may simply be reversed so as to hide the icon while displaying the movie or other content. At the same time, the TV broadcast may be re-sized either to display it in a minimized window it the case that it is to be suppressed altogether, or to display it superimposed on the IP content so that both are visible at the same time in different, possibly overlapping, windows.

FIG. **4** is a flow diagram showing the principal actions carried out by an IP content provider such as an advertiser for creating IP content for overlaying by the TV-Internet Integration Box with a broadcast TV signal. Thus, the advertiser designs an advertisement and sends it together with a request to a web site link via the Internet or off-line as required. Since the IP content is intended for display on a low resolution TV screen, any textual information that forms part of the IP content is formatted so as to be legible when displayed on lower resolution TV screens. Generally, this requires reducing the quantity of textual information to a minimum and sizing any text so that it is legible. Often, a web advertiser will wish to create an on-line advertisement based on an existing web page. In such case, it may be necessary to reduce and resize any textual information so as to comply with these requirements.

The request specifies calendar and program data as explained above, which the web site operator checks for availability and type, defining to which group of users it belongs. If the required time slots are available for the requested channels, the site operator confirms the request and forwards the request to the web control room for final confirmation. On confirming the request, a status flag of the advertisement is changed so as to indicate that the advertisement is awaiting final confirmation from the web control room. At the web control room the advertisement is checked for content by human evaluators who either approve or reject the advertisement content and, in the case of rejection, may provide reasons therefore. If the advertisement (or other IP content) is approved by the web control center, its status is set to "approved" and the web control center bills the customer and the web site operator adds the advertisement and the scheduling information to the database **19**. The customer who is billed is typically the advertiser but may be any entity that is identified by a digital signature associated with the advertisement. If either of the requests for approval is rejected the status of the advertisement is set to "rejected" and the web control room informs the advertiser of the grounds for rejection, allowing the advertiser to change the request and re-send to the web site operator. Optionally, in such case the web server may be adapted to display to the advertiser the occupied timetable and suggest new timetable. Only those advertisements whose status flag indicates that they are approved by the web control room are actually available for transmission. The time slot and channel information associated with any advertisement that is not so approved remain available for other advertisements and will be shown as available to another advertiser who attempts to schedule an advertisement. Only when the advertisement is actually approved by the web site operator and its status is updated accordingly, are the transmission time and channel locked for use by other users.

The IP packet data may optionally be associated with predefined user-profiles that are also stored in the database **19** so that the advertisement or other IP data is sent only to specific TV-Internet Integration Boxes. Such user-profiles may be configured by the advertiser or by the user. Thus, for example, the invention allows supplementary or complementary program content to be associated with a TV broadcast, while providing the facility to view the supplementary program content only to specific subscribers, according to their user-profiles.

Thus, by way of non-limiting example, the invention allows sign language to be associated with a TV broadcast for the hard of hearing. It is known to display sign language in a corner of the screen, but since this is usually done indiscriminately it also apt to disturb the majority of viewers who do not need the sign language. The invention may be used to avoid this by conveying the sign language as IP content separate from main TV broadcast and allowing subscribers to register for a "sign language" service so that only registered subscribers receive the IP content. IP content files corresponding to sign language to be associated with different TV broadcasts are created as explained above, and stored in the database **19** together with user-profile data indicating which subscribers are registered to obtain the service. The user-profile data may contain data that further refines the target audience, such as categories of TV program alongside which the sign language is to be displayed. The user-profile data may further contain geographical data or language data that allows sign language corresponding to a target language to be conveyed to specific audiences. By such means, a TV program can be accompanied by a sign language overlay that is customized to a target language depending on the location of the IP target address or the language requested by the subscriber on registering for the service.

FIG. **5** is a block diagram showing the functionality of the TV-Internet Integration Box **16** shown in FIG. **1**. Thus, the TV-Internet Integration Box **16** comprises a first input **21** for receiving first data corresponding to a TV broadcast signal, typically being a cable TV signal and a second input **22** for receiving respective second data corresponding to IP packet data. The IP packet data may optionally be downloaded to specific TV-Internet Integration Boxes in accordance with predefined user-profiles associated with IP packet data and stored in the database **19**. A combiner unit **23** is coupled to the first and second inputs for combining the first data and the second data to form a combined video signal. A video output **24** is coupled to the combiner unit **23** for conveying the combined video signal to a TV set in a user premises. The TV set may be a conventional TV having a relatively low resolution screen for displaying a first image corresponding to the first data and having superimposed thereon a second image corresponding to the second data. Alternatively, it can be a computer having a video card for displaying a combined video image on a high resolution display monitor.

The combiner unit **23** is shown coupled to a processing unit **25** although in practice it may be implemented in software by the processing unit **25**. A memory **26** is coupled to the processing unit **25** for storing program data, such as profiles and

program timetables etc. so as to allow the processing unit **25** to filter incoming IP content according to pre-defined profiles and other selection data. The processing unit **25** is also coupled to a user interface **27** that allows the subscriber to program the TV-Internet Integration Box **16** and store the program data in the memory **26**. An IR receiver **28** is adapted to receive IR commands from a remote control unit described below with reference to FIG. **6** and is coupled to a decoder **29**, which decodes a received IR signal and feeds it to the processing unit **25** for further processing.

FIG. **6** is a block diagram showing the functionality of a remote control unit **30** for interfacing with the TV-Internet Integration Box **16** shown in FIG. **5**. The remote control unit **30** includes a processing unit **31** coupled to a user interface **32**, typically having a keypad or pushbuttons for program selection and setting as well as other functions. The user interface **32** is coupled to an encoder **33** which is responsive to a pressed key or key combination for producing a corresponding IR signal that is transmitted by an IR transmitter **34** to the TV-Internet Integration Box **16** for receipt by the IR receiver **28** thereof.

As noted above, the keys may be color coded in correspondence with pre-arranged colors of commonly displayed icons, so that pressing on a specific key activates the displayed icon of the same color. Alternatively, at least some of the keys may be covered with transfers depicting commonly displayed icons, whereupon the appropriate keys or button for activating each icon are easily recognized.

The keys may also be programmed so that depressing the same key more than once automatically re-sizes the windows containing the TV broadcast and the Internet broadcast. For example, FIG. **7***a* shows the default situation where a TV screen **40** displays a conventional TV broadcast in a window **41** that is sized to occupy the whole area of the TV screen **40** and will be referred to as the primary window. Also shown are IP icons **42**, **43** and **44** each of which points to a different IP content that is streamed from a respective web site of known address. On pressing the key on the remote control unit **30** that corresponds to the icon **42**, the IP content corresponding thereto is displayed within a small window **45** (referred to as the secondary window) that is contained within the primary window **41** as shown in FIG. **7***d*. The icons **42**, **43** and **44** remain visible so that, if desired, the selected program can be changed by pressing a different key on the remote control unit **30**. On pressing a key a second time in succession, the IP content is re-sized so that its window **45** occupies substantially the whole area of the screen as shown in FIG. **7***c*. On pressing the key a third time in succession, the situation reverts to the default shown in FIG. **7***a* where the primary window **41** containing the TV broadcast occupies the whole area of the TV screen **40**. Thus, each key operates as a three-way toggle that switches between three different display modes.

The second data containing display information for the icons also contains data that informs the TV-Internet Integration Box **16** on which channel or channels the associated IP content is to be streamed and at what times. The second data also specifies the web site where the IP content is located. This is summarized in the following table:

TABLE I

Second data-definition			
Icon image	Channel	Time	Website of IP content
ICON.GIF	2; 23	19:30; 21:30	www.AB.com/adverts/123.htm

Thus, the second data depicted in Table I above shows that the icon image is contained in a file called ICON.GIF and that the IP content relating thereto is to be streamed on channels **2** and **23** at times 19:30 and 21:30, these being the start times. The end times are determined by the duration of the IP content to be streamed, which is downloaded from a web site whose name is shown in the table and is contained in the second data.

The second data is downloaded from the web server **14** whose web site address is known to the TV-Internet Integration Box **16**. In accordance with one embodiment, the processing unit **25** is programmed to access the web server **14** periodically and download current program data. For example, once every 2 to 3 hours the TV-Internet Integration Box **16** may automatically access the web server **14** to download the second data corresponding current program data for the next 3 hours as formatted according to Table I. The downloaded information is stored locally in the memory **26** of the TV-Internet Integration Box **16**. This allows the TV-Internet Integration Box **16** to pre-fetch IP content relating to all the currently displayed icons and to store the data relating thereto in the memory **26** thus obviating the need to access the web site of a selected icon for the purpose of downloading IP selected content. Since this carries the overhead of web access and downloading of data, which can be cumbersome particularly if there is insufficient bandwidth, pre-fetching in this manner ensures that initial IP content data will be immediately available on selection of one of the icons.

FIG. **8** is a flow diagram showing the principal actions carried out by the TV-Internet Integration Box when pre-fetching a digital broadcast signal. Thus, the TV-Internet Integration Box **16** periodically accesses the web server **14** and downloads current program data, constituting the second data. It then extracts from the current program data the image files of the current icons and stores them in the memory **26**. In like manner, it extracts the web sites of the IP content corresponding to the currently displayed icons and then accesses these sites to pre-fetch the respective IP content, which it likewise stores in the memory **26**. On selection of an icon, the TV-Internet Integration Box **16** opens a secondary window **45** within the primary window **41**, reads from the memory **26** the pre-fetched IP content and displays it in the secondary window **45**.

It will be understood that the TV-Internet Integration Box according to the invention may be at least partially implemented by a suitably programmed computer. Likewise, the invention contemplates a computer program being readable by a computer for executing the method of the invention. The invention further contemplates a machine-readable memory tangibly embodying a program of instructions executable by the machine for executing the method of the invention.

The invention claimed is:

1. A TV-Internet Integration circuit configured to combine, at a user's premises, TV channel video with Internet Protocol (IP) material selected by the user through overlays on the TV channel video displayed in response to an overlay activation criterion that the user has selected, said circuit comprising:

a combiner circuit at the user's premises having a first input for receiving the TV channel video and a second input for receiving the IP material, and further having an output for outputting the combined video;

wherein:

the TV channel video conforms to a TV broadcast format standard as received at the combiner circuit;

the IP format material, as received at the combiner circuit, conforms to an IP format standard that is different from the TV broadcast format standard and is received at the combiner circuit via a path different from that for the TV channel video at least in part; and

the combiner circuit comprises a memory circuit configured to store, at the user's premises, plural overlays each identifying a respective source of IP material;

a display screen at the user's premises coupled with the combiner circuit to receive and display the combined video as a screen image;

said combiner circuit being further configured to:

respond to an overlay activation criterion to cause the display screen to display the overlays as at least a part of the screen image, and

respond to an overlay activation signal selected by the user at the user's premises and identifying one of the displayed overlays to cause the screen to display IP format material from the IP source associated with the identified overlay;

wherein depending on the user's selection at the user's premises the screen image is at respective times the TV channel video with or without overlays thereon and the IP material that the user has selected through the displayed overlays.

2. The TV-Internet Integration circuit of claim **1** in which the memory of the combiner circuit is configured to store overlays each identifying a respective source of IP material without also storing other content from the respective source.

3. The TV-Internet Integration circuit of claim **1** in which the memory of the combiner circuit is configured to store overlays each identifying a respective source of IP material by specifying a web site where the respective IP material is located.

4. The TV-Internet Integration circuit of claim **1** in which the combiner circuit is configured to generate the overlay activation criterion at the user's premises.

5. The TV-Internet Integration circuit of claim **1** in which the combiner circuit is configured to generate the overlay activation criterion at the user's premises by matching material stored in the memory with IP material available at the second input of the combiner circuit.

6. The TV-Internet Integration circuit of claim **1** in which the combiner circuit is configured to respond to the overlay activation criterion by causing the screen to display the overlays on a screen showing the TV channel video.

7. The TV-Internet Integration circuit of claim **1** in which the combiner circuit is configured to respond to the overlay activation criterion by causing the screen to display the overlays in respective windows of the screen while the screen is showing the TV channel video.

8. The TV-Internet Integration circuit of claim **1** in which the combiner circuit is configured to receive at least some of the overlays through its second input and store them in the memory of the combiner circuit.

9. The TV-Internet Integration circuit of claim **1** including a set top box through which the combiner circuit receives the TV channel video at its first input.

10. The TV-Internet Integration circuit of claim **1** including a set top box through which the combiner circuit receives the TV channel video at its first input and wherein the path through which the combiner circuit receives the IP material at its second input bypasses the set top box.

11. The TV-Internet Integration circuit of claim **1** in which the combiner circuit is configured to cause the screen to display an overlay received at the second input of the combiner circuit in timed relationship with an event in the TV channel video being shown on the screen at the time.

12. The TV-Internet Integration circuit of claim **1** including a remote control unit operatively associated with the combiner circuit and configured to respond to user action to generate the overlay activation signal.

13. The TV-Internet Integration circuit of claim **1** including a remote control unit operatively associated with the combiner circuit and configured to respond to user action to generate the overlay activation signal, said remote control unit comprising a encoder configured to encode the user action into an IR signal and an IR transmitter transmitting the IR signal and the combiner circuit comprises an IR receiver and an IR decoder configured to receive and decode the IR signal into said overlay activation signal.

14. The TV-Internet Integration circuit of claim **1** in which the combiner circuit comprises a programmed processing unit carrying out at least some of the responding to the overlay activation criterion and the overlay activation signal.

15. A TV-Internet Integration method combining, at a user's premises, TV channel video with Internet Protocol (IP) material selected by the user through overlays on the TV channel video displayed in response to an overlay activation criterion that the user has selected, comprising:

providing a combiner circuit at the user's premises having a first input for receiving the TV channel video and a second input for receiving the IP material, and further having an output for outputting the combined video;

wherein:

the TV channel video conforms to a TV broadcast format standard as received at the combiner circuit; and

the IP format material, as received at the combiner circuit, conforms to an IP format standard that is different from the TV broadcast format standard and is received at the combiner circuit via a path different from that for the TV channel video at least in part;

storing in a memory of the combiner circuit, at the user's premises, plural overlays each identifying a respective source of IP material;

providing a display screen at the user's premises coupled with the combiner circuit to receive and display the combined video as a screen image;

causing the combiner circuit to:

respond to an overlay activation criterion to cause the display screen to display the overlays as at least a part of the screen image, and

respond to an overlay activation signal selected by the user at the user's premises and identifying one of the displayed overlays to cause the screen to display IP format material from the IP source associated with the identified overlay;

wherein depending on the user's selection the screen image is at respective times the TV channel video with or without overlays thereon and the IP material that the user has selected through the displayed overlays.

16. The TV-Internet Integration method of claim **15** in which the storing of overlays in the memory of the combiner circuit comprises storing overlays each identifying a respective source of IP material without the overlay also including additional IP content.

17. The TV-Internet Integration method of claim **15** in which the storing of overlays in the memory of the combiner circuit comprises storing overlays each identifying a respective source of IP material by specifying a web site where the respective IP material is located.

18. The TV-Internet Integration method of claim **15** including generating the overlay activation criterion at the user's premises.

19. The TV-Internet Integration method of claim **15** including configuring the combiner circuit to receive at least some of the overlays through its second input and store them in the memory of the combiner circuit.

20. The TV-Internet Integration method of claim **15** including configuring the combiner circuit to cause the screen to display an overlay received at the second input of the combiner circuit in timed relationship with an event in the TV channel video being shown on the screen at the time.

* * * * *

EXHIBIT 4

to Declaration of Charles Cantine in Support of Plaintiff TVnGO's Opening Claim Construction Brief

US009407969B2

(12) **United States Patent**
Merlin

(10) **Patent No.: US 9,407,969 B2**
(45) **Date of Patent: Aug. 2, 2016**

(54) **FORMING OVERLAYS AT USER'S PREMISES AND UTILIZING THEM FOR SELECTIVE COMBINATIONS OF TV BROADCAST CHANNEL FORMAT MATERIAL AND IP-FORMAT MATERIAL**

(75) Inventor: **Yaakov Merlin**, Raanana (IL)

(73) Assignee: **TVGOLTD**, Amsterdam (NL)

(*) Notice: Subject to any disclaimer, the term of this patent is extended or adjusted under 35 U.S.C. 154(b) by 1137 days.

(21) Appl. No.: **13/336,189**

(22) Filed: **Dec. 23, 2011**

(65) **Prior Publication Data**

US 2012/0096505 A1 Apr. 19, 2012

Related U.S. Application Data

(63) Continuation of application No. 11/794,825, filed as application No. PCT/IL2005/000035 on Jan. 11, 2005, now Pat. No. 8,132,220.

(51) **Int. Cl.**

H04N 21/443	(2011.01)
H04N 21/643	(2011.01)
H04N 21/431	(2011.01)
H04N 21/438	(2011.01)
H04N 21/462	(2011.01)
H04N 21/4782	(2011.01)

(52) **U.S. Cl.**

CPC ***H04N 21/64322*** (2013.01); ***H04N 21/4316*** (2013.01); ***H04N 21/4381*** (2013.01); ***H04N 21/4438*** (2013.01); ***H04N 21/4622*** (2013.01); ***H04N 21/4782*** (2013.01)

(58) **Field of Classification Search**

None

See application file for complete search history.

(56) **References Cited**

U.S. PATENT DOCUMENTS

6,136,898	A	10/2000	Loza et al.	
6,240,555	B1	5/2001	Shoff et al.	
6,351,270	B1	2/2002	Nishikawa et al.	
6,606,746	B1	8/2003	Zdepski et al.	
7,124,430	B2 *	10/2006	Aratani et al.	725/142
7,340,457	B1 *	3/2008	Killian et al.	
7,456,902	B2	11/2008	Kikinis	
2002/0007493	A1 *	1/2002	Butler et al.	725/109
2004/0107437	A1 *	6/2004	Reichardt et al.	725/37

FOREIGN PATENT DOCUMENTS

WO	WO 00/08855	2/2000
WO	WO 02/19689 A	3/2002

* cited by examiner

Primary Examiner — Mark D Featherstone

(74) *Attorney, Agent, or Firm* — Ivan S. Kavrukov; Cooper & Dunham

(57) **ABSTRACT**

A method of displaying an Internet signal on a TV. Preferably, at least a portion of the Internet signal is selectively displayed by a remote activation control signal.

21 Claims, 7 Drawing Sheets

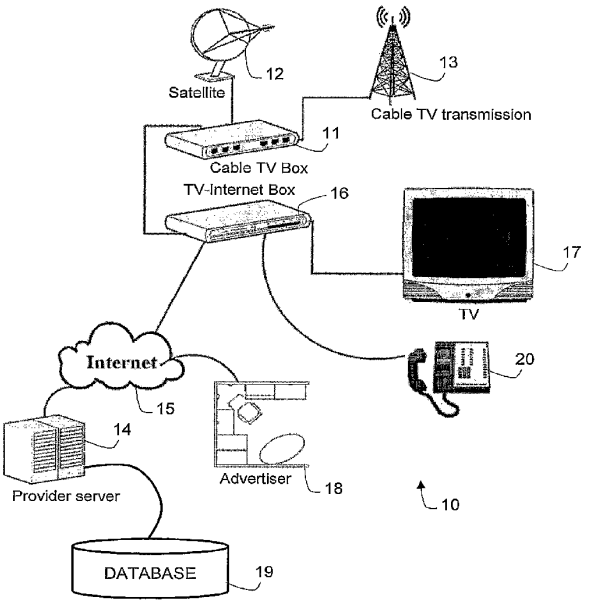

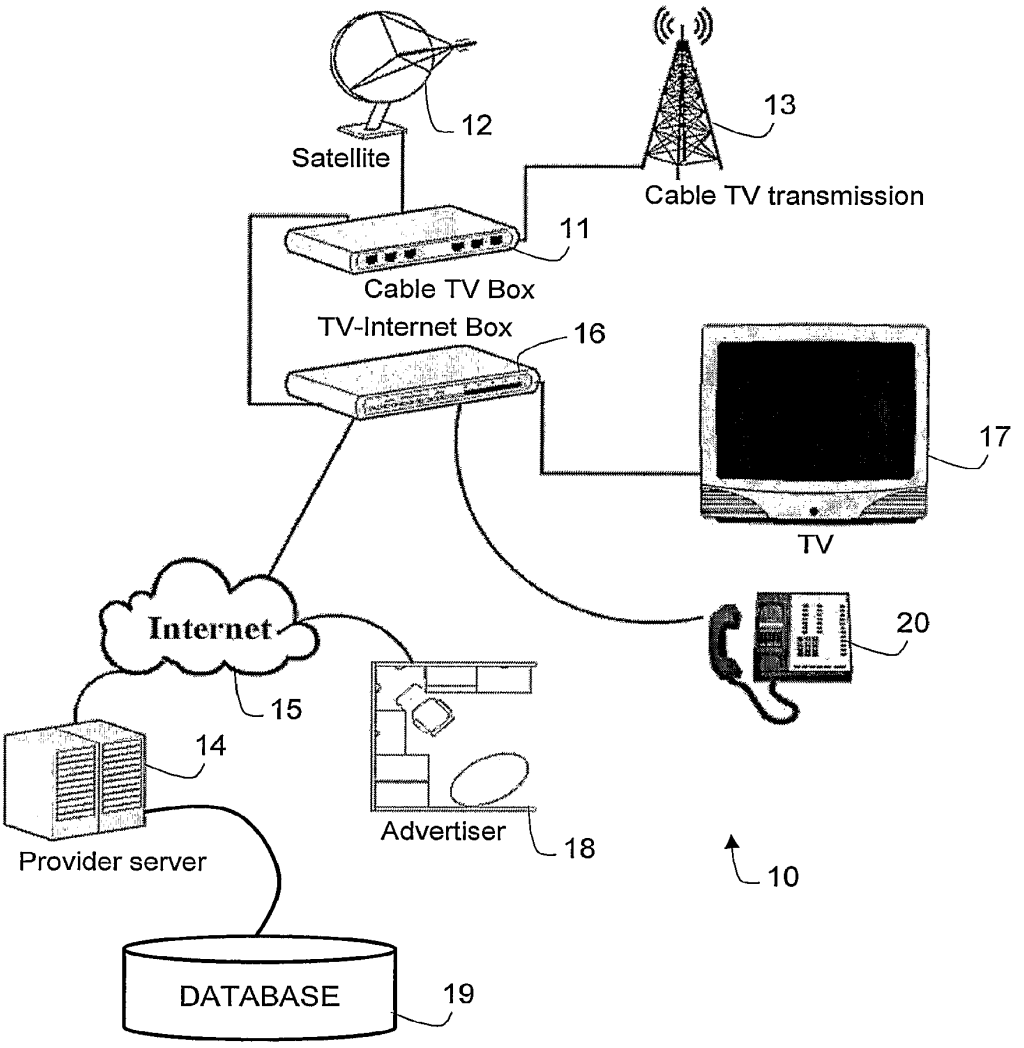
12
Satellite
13
Cable TV transmission
11
Cable TV Box
TV-Internet Box
16
17
TV
Internet
15
20
14
Provider server
Advertiser
18
10
DATABASE
19

FIG. 1

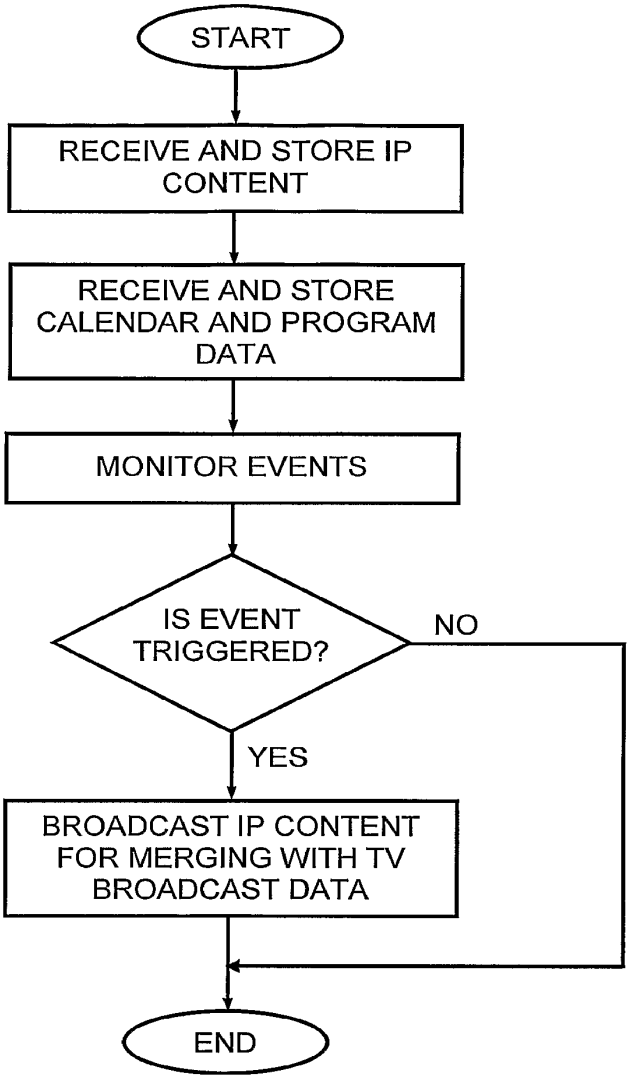
START
RECEIVE AND STORE IP CONTENT
RECEIVE AND STORE CALENDAR AND PROGRAM DATA
MONITOR EVENTS
IS EVENT TRIGGERED?
NO
YES
BROADCAST IP CONTENT FOR MERGING WITH TV BROADCAST DATA
END

FIG. 2

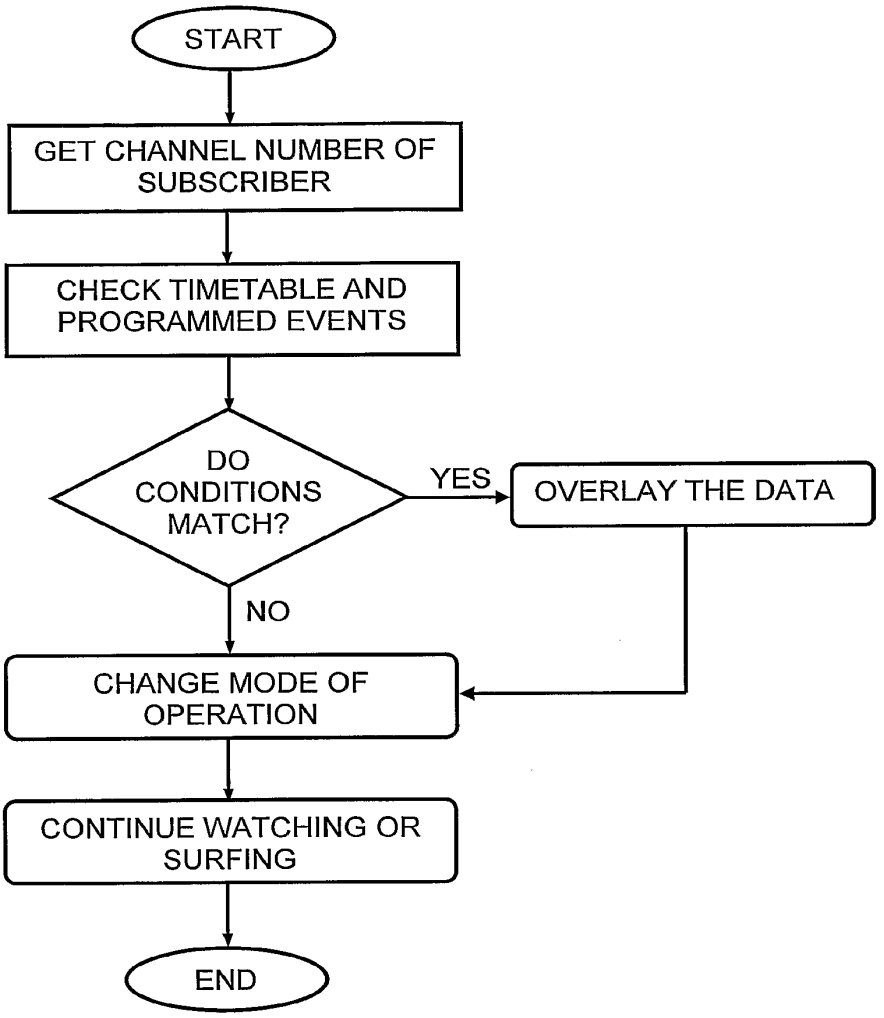
START
GET CHANNEL NUMBER OF SUBSCRIBER
CHECK TIMETABLE AND PROGRAMMED EVENTS
DO CONDITIONS MATCH?
YES
OVERLAY THE DATA
NO
CHANGE MODE OF OPERATION
CONTINUE WATCHING OR SURFING
END

FIG. 3

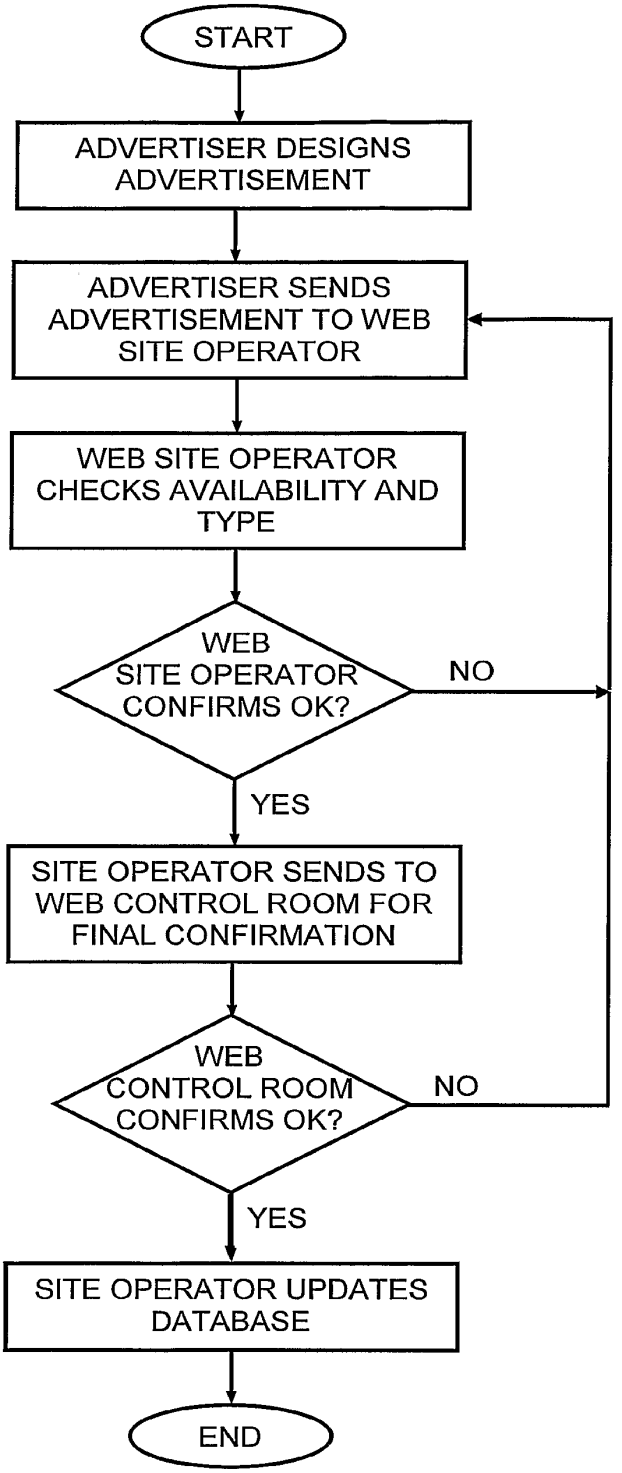
START
ADVERTISER DESIGNS ADVERTISEMENT
ADVERTISER SENDS ADVERTISEMENT TO WEB SITE OPERATOR
WEB SITE OPERATOR CHECKS AVAILABILITY AND TYPE
WEB SITE OPERATOR CONFIRMS OK?
NO
YES
SITE OPERATOR SENDS TO WEB CONTROL ROOM FOR FINAL CONFIRMATION
WEB CONTROL ROOM CONFIRMS OK?
NO
YES
SITE OPERATOR UPDATES DATABASE
END

FIG. 4

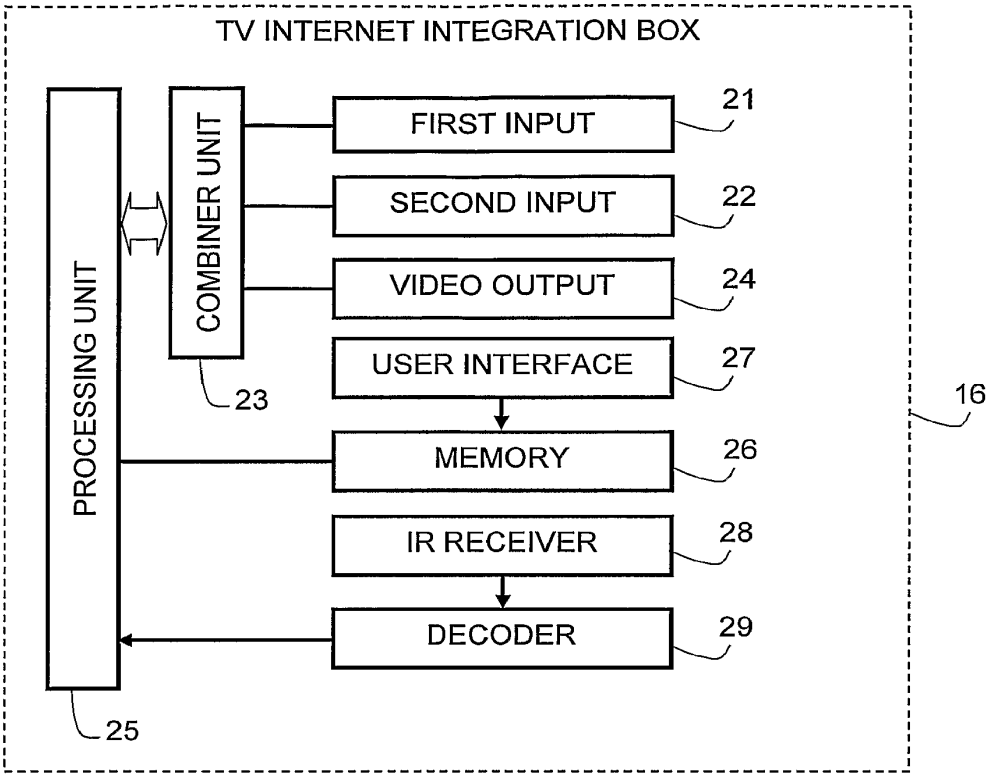
TV INTERNET INTEGRATION BOX
PROCESSING UNIT
COMBINER UNIT
FIRST INPUT
SECOND INPUT
VIDEO OUTPUT
USER INTERFACE
MEMORY
IR RECEIVER
DECODER
21
22
24
27
26
28
29
23
25
16

FIG. 5

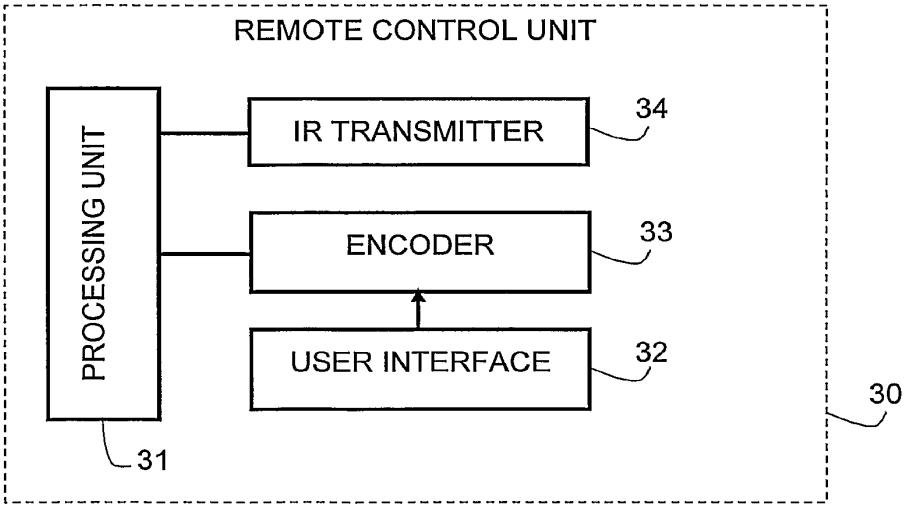
REMOTE CONTROL UNIT
PROCESSING UNIT
IR TRANSMITTER
ENCODER
USER INTERFACE
34
33
32
31
30

FIG. 6

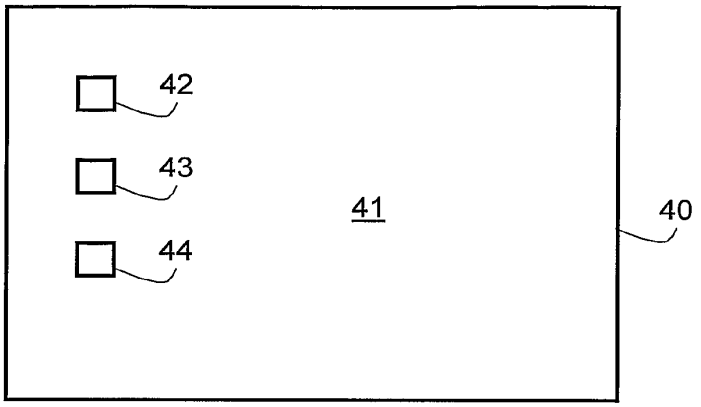

FIG. 7a

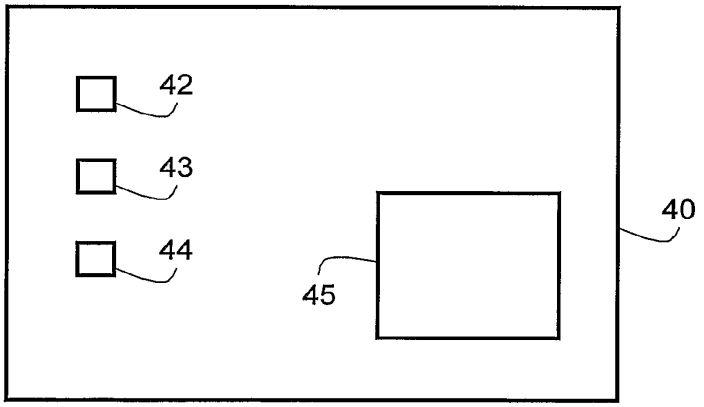

FIG. 7b

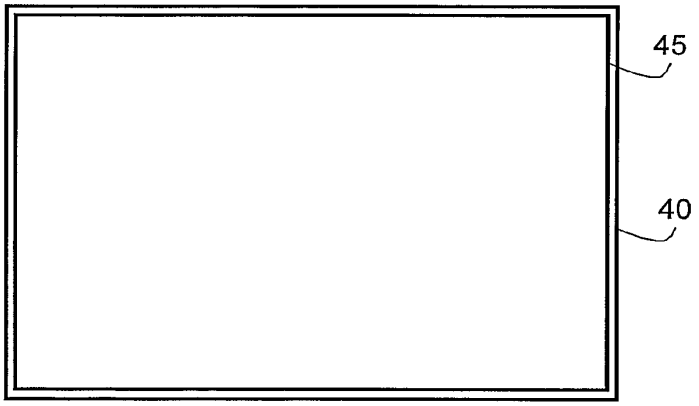

FIG. 7c

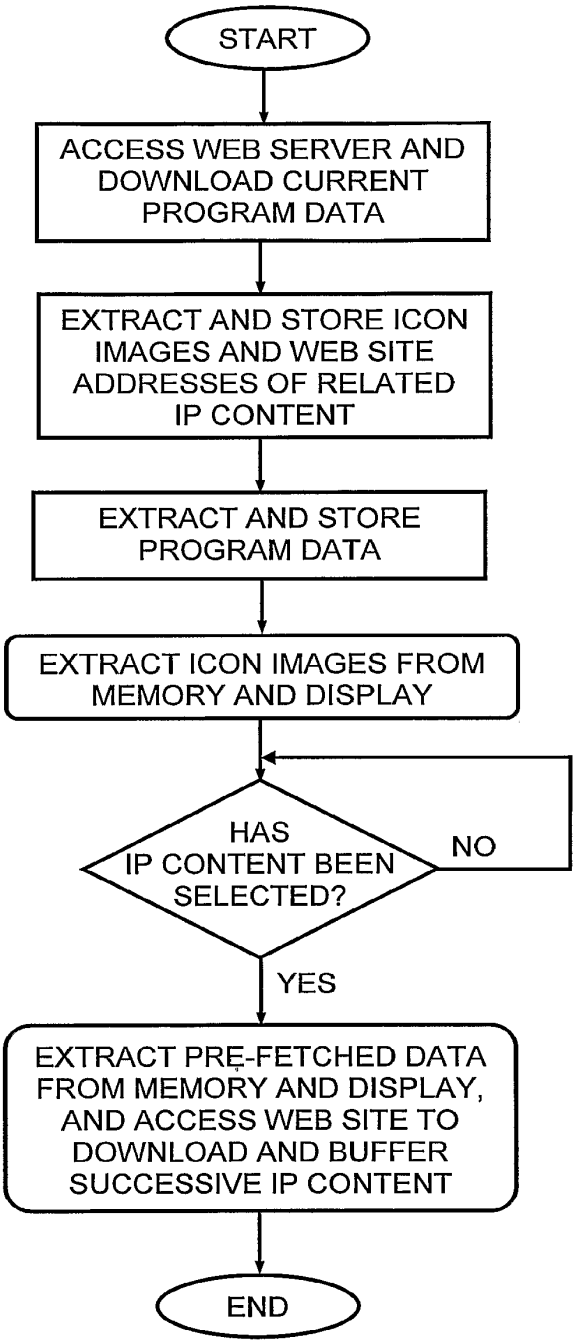
START
ACCESS WEB SERVER AND DOWNLOAD CURRENT PROGRAM DATA
EXTRACT AND STORE ICON IMAGES AND WEB SITE ADDRESSES OF RELATED IP CONTENT
EXTRACT AND STORE PROGRAM DATA
EXTRACT ICON IMAGES FROM MEMORY AND DISPLAY
HAS IP CONTENT BEEN SELECTED?
NO
YES
EXTRACT PRE-FETCHED DATA FROM MEMORY AND DISPLAY, AND ACCESS WEB SITE TO DOWNLOAD AND BUFFER SUCCESSIVE IP CONTENT
END

FIG. 8

FORMING OVERLAYS AT USER'S PREMISES AND UTILIZING THEM FOR SELECTIVE COMBINATIONS OF TV BROADCAST CHANNEL FORMAT MATERIAL AND IP-FORMAT MATERIAL

This is a Continuation Application filed under 35 U.S.C. §120 as a continuation of U.S. patent application Ser. No. 11/794,825, filed on Jul. 6, 2007, which was a National Phase under 35 U.S.C. §371 of International Application No. PCT/IL2005/000035, filed on Jan. 11, 2005, the content of each of which is hereby incorporated by reference in their entirety.

FIELD OF THE INVENTION

This invention relates to the broadcast of audio/video content over the TV infrastructure and Internet.

BACKGROUND OF THE INVENTION

With the proliferation of cable TV and the high bandwidth currently available for the Internet, which promises to increase even more in the near future, Internet TV is fast becoming a viable alternative to regular and cable TV broadcast channels. Moreover, Internet TV is not subject to the government licensing laws required by cable and broadcast TV channels and thus offers programs that may not be obtainable using regular and cable TV broadcast channels.

It is not uncommon for Internet broadcasters to offer near DVD-quality movies that can be viewed either using video streaming or downloaded to the hard disk of a subscriber's computer for viewing "off-line". The video quality of such movies is vastly superior to that obtainable on a regular TV set, owing to the high resolution associated with computer displays that cannot presently be matched by TV screens. However, this is not particularly troublesome where only pictures are displayed; but it becomes a problem when textual information is displayed that is formatted for high resolution computer monitors since the text is then barely legible when displayed on lower resolution TV screens. Thus, if a regular TV set is used to display Internet content that is rich in text, the resulting display quality is poor.

It would therefore be a significant benefit to users of low resolution displays such as TV screens, to be able to watch regular and cable TV broadcasts and to integrate with Internet content on demand. In particular, it would be desirable to provide such a user with a visual and legible indication when viewing a regular or TV broadcast of available Internet movies or other programs and allow him to use the displayed indication to integrate with a desired Internet broadcast.

These requirements have been only partially addressed in the art. WO 00/08855 to United Video Properties, Inc. and entitled "A system and method for synchronizing television-related product content and internet-delivered information" describes a screen generator that merges program guide data with a TV image and superimposes an Interactive TV Guide on the regular TV image.

US 2002/0093594 (Kikinis) entitled "Method and system for identifying addressing data within a television presentation" illustrates in FIG. **5** the common connection of TV and Internet to a set-top box.

U.S. Pat. No. 6,606,746 to OpenTV, Inc. entitled "Interactive television system and method for displaying a graphical user interface using insert pictures" discloses interactive television having a compressed background picture and one or more compressed insert pictures commonly connected to a TV-Internet Integration box. The compressed insert pictures

represent items of a GUI. The local system i.e. computer "pastes" the insert pictures into the background image.

U.S. Pat. No. 6,130,898 to Bell Atlantic Network Services, Inc., entitled "Simulcasting digital video programs for broadcast and interactive services" teaches an interactive TV system where TV broadcast data is merged with Internet data. To this end, public wireless packet data network is combined with a broadband digital broadcast network at a plurality of transmitter sites. Customer premises receiving systems include a receiving antenna and one or more digital entertainment terminals. The terminal includes a channel selector and digital receiver for capturing a digital transport stream from a selected channel. A processor converts selected program information from the transport stream for presentation, e.g. via a television set. The terminal also includes a CPU controlling the operation of the channel selector and the processor in response to user inputs.

None of these references appears to disclose the ability to merge broadcast TV signals with IP packet data at a customer site, specifically in such a manner that a conventional TV set is able to display Internet program selection data while viewing a TV broadcast program and to use the selected data to select an Internet channel, such as a movie, for display on the TV set instead of the TV broadcast program.

SUMMARY OF THE INVENTION

It is therefore an object of the present invention to provide a TV-Internet Integration Box having the ability to merge broadcast TV signals with IP packet data at a customer site.

It is a further object that such a TV-Internet Integration Box permits a TV set connected thereto to display Internet program selection data while viewing a TV broadcast program and to use the selected data to select an Internet movie for display instead of the TV broadcast program.

These objectives are realized in accordance with a first aspect of the invention by a method for facilitating first data broadcast over a TV subscriber channel to be displayed simultaneously together with second data broadcast over a digital data communications network, the method comprising:

receiving said first data and said second data;

combining said first data and said second data to form a combined video signal; and

conveying said combined video signal to a TV set in a user premises for displaying a first image corresponding to the first data and having superimposed thereon a second image corresponding to the second data, said second image being configured to allow a user at said user premises to interact therewith for redirecting to the digital data communications network and displaying a program broadcast thereby in at least a portion of the TV set.

In accordance with a second aspect of the invention there is provided a method for facilitating first data broadcast over a TV subscriber channel to be displayed simultaneously together with second data broadcast over a digital data communications network, the method comprising:

receiving said first data at a user premises;

receiving said second data at the user premises according to a user-profile associated with the second data;

combining said first data and said second data to form a combined video signal; and

conveying said combined video signal to a TV set in a user premises for displaying a first image corresponding to the first data and having superimposed thereon a second image corresponding to the second data, said second image being configured to allow a user at said user premises to interact there-

with for redirecting to the digital data communications network and displaying a program broadcast thereby in at least a portion of the TV set.

BRIEF DESCRIPTION OF THE DRAWINGS

In order to understand the invention and to see how it may be carried out in practice, a preferred embodiment will now be described, by way of non-limiting example only, with reference to the accompanying drawings, in which:

FIG. **1** is pictorial representation showing a TV-Internet Integration Box according to the invention connected to a mixed broadcast network for combining Internet and broadcast TV signals;

FIG. **2** is a flow diagram showing the principal actions carried out by the web server shown in FIG. **1**;

FIG. **3** is a flow diagram showing the principal actions carried out by the TV-Internet Integration Box shown in FIG. **1**;

FIG. **4** is a flow diagram showing the principal actions carried out by an IP content provider such as an advertiser for creating IP content for overlaying by the TV-Internet Integration Box with a broadcast TV signal;

FIG. **5** is a block diagram showing the functionality of the TV-Internet Integration Box shown in FIG. **1**;

FIG. **6** is a block diagram showing the functionality of a remote control unit for interfacing with the TV-Internet Integration Box shown in FIG. **5**;

FIGS. **7***a*, **7***b* and **7***c* are pictorial representations showing a TV set during different stages of receiving and displaying combined Internet and broadcast TV signals; and

FIG. **8** is a flow diagram showing the principal actions carried out by the TV-Internet Integration Box when pre-fetching a digital broadcast signal.

DETAILED DESCRIPTION OF EXEMPLARY EMBODIMENTS

FIG. **1** is pictorial representation showing a mixed broadcast network **10** having a Cable TV Box **11** coupled to a satellite **12** and a Cable TV transmitter **13** for receiving a cable TV broadcast signal (constituting first data). An Internet broadcast signal comprising IP packet data (constituting second data) is streamed from a web server **14** via the Internet **15** (constituting a digital data communications network) to a TV-Internet Integration Box **16** for display on a TV set **17** coupled thereto. The TV set **17** may be constituted by a computer having a video card and a high resolution display monitor. However, the principal benefit of the invention is obtained when a regular TV set having low resolution is used, since such a configuration has not so far been used to integrate Internet programs with conventional TV broadcasts in the manner proposed by the invention. The TV-Internet Integration Box **16** is connected to the Cable TV Box **11** for combining the broadcast TV signals received by the Cable TV Box **11** with the IP packet data broadcast via the Internet **15**. Also shown is an advertiser **18** having a computer coupled to the Internet **15** for downloading advertising content to the web server **14** for storage in a database **19** and a telephone **20** coupled to the TV-Internet Integration Box **16** for feeding telephony signals to the TV-Internet Integration Box **16**, which combines the received telephony signals with video data received from the Cable TV Box **11** and/or the Internet **15**.

The advertiser **18** typically pays for specific time slots and for one or more specific channels during which his advertisement will be broadcast. Thus, in addition to the advertising content which is prepared and then stored on the web server **14** in known manner, the advertiser **18** also specifies when the advertisement is to be broadcast and on which TV channel or channels. By such means, a sports advertiser can request time during the interval of a football match to broadcast a commercial, while a toy advertiser would obviously prefer to broadcast a commercial during a children's TV program. Different time slots may be charged out at different rates depending on the ratings associated with the associated TV program. After selecting one or more time slots, the advertisement content as well as the selected time slots and program data are stored in the database **19** accessed by the web server **14**.

FIG. **2** is a flow diagram showing the principal actions carried out by the web server **14**, which is responsive to an event timetable stored and updated in the database **19**. To this end, an IP content provider interfaces with the web server for creating IP content and associating therewith calendar and program data indicating dates, times and channels in respect of which the IP content is to be streamed to the customer premises. Once this is done, the web server **14** monitors events, which are triggered in known manner causing the web server **14** to extract from the database **19** pre-stored IP content for streaming over the Internet **15** to the TV-Internet Integration Box **16**, where it is processed as described below with reference to FIG. **3** of the drawings.

FIG. **3** is a flow diagram showing the principal actions carried out by the TV-Internet Integration Box **16**. In accordance with one embodiment of the invention, the subscriber selects what kind of IP content he wishes to receive and in respect of which program details, such as icons and/or textual data, are to be displayed together with the TV broadcast data. For example, a subscriber may wish to block certain types of program material or may wish to receives details thereof only during limited hours, for example when the children are asleep. To this end, the subscriber is able to program the TV-Internet Integration Box **16** in much the same way that a video cassette recorder is programmed so as to store in the memory **25** a timetable indicating what type of IP data is to be displayed and when. The timetable is updated as and when required by the subscriber. The TV-Internet Integration Box **16** is adapted to check the timetable periodically and to filter out incoming IP content that is either of a type that is not required or that is broadcast during an unauthorized time window. By such means, an additional layer of authorization may be provided to that stored in the database **19** for access by the web server **14**, thus allowing pre-fetching of IP content and storage in the memory **25** of the TV-Internet Integration Box **16**. Upon detecting a matching event, corresponding to received IP content that is of interest to the subscriber, the TV-Internet Integration Box **16** overlays the matched IP content with the current broadcast and displays the new integrated video on the subscriber's TV set **17**. For example, the matched information may be an icon that indicates to the subscriber that an Internet movie is currently being broadcast; or it may be an advertisement or information related to the TV program being broadcast.

The subscriber can respond to the overlaid data using a remote control unit, described below with reference to FIG. **6** of the drawings, which is programmed to interact with the displayed icon or other data that is overlaid on the TV broadcast. To this end, the displayed IP content may optionally contain textual information advising the subscriber to press a particular button on the remote control unit. Alternatively, buttons on the remote control unit may be color-coded and the icon may be colored so as to indicate to the subscriber which color-coded button to press for selection of the corresponding

IP content. If the subscriber responds to the overlaid data by pressing a button on the remote control unit, the TV-Internet Integration Box **16** receives the signal from the remote control unit and changes the priorities for use with the Picture-in-Picture (PIP) technique to display the TV broadcast in a reduced window and to show the other media, i.e. the IP content, in an enlarged window. The IP content can be a custom designed web page for TV, or a game or advertisement movie or any other information placed on the matched record. PIP techniques are known per se and allow a video or graphics image to be inserted on top of a movie clip and to be positioned and sized. An Effect In and Effect Out may be used to fade or move the inserted video to the screen. In accordance with one such technique, the bulk of the IP content e.g. corresponding to a movie may be rendered transparent so as to provide a transparent window through which an icon e.g. relating to the movie is visible. The video content of the TV broadcast is displayed in one window and the IP content in another window. Since the bulk of the IP content is transparent it will remain invisible to the subscriber, while the icon (or text) will be visible since it is opaque. On selecting the displayed icon, the attributes may simply be reversed so as to hide the icon while displaying the movie or other content. At the same time, the TV broadcast may be re-sized either to display it in a minimized window it the case that it is to be suppressed altogether, or to display it superimposed on the IP content so that both are visible at the same time in different, possibly overlapping, windows.

FIG. **4** is a flow diagram showing the principal actions carried out by an IP content provider such as an advertiser for creating IP content for overlaying by the TV-Internet Integration Box with a broadcast TV signal. Thus, the advertiser designs an advertisement and sends it together with a request to a web site link via the Internet or off-line as required. Since the IP content is intended for display on a low resolution TV screen, any textual information that forms part of the IP content is formatted so as to be legible when displayed on lower resolution TV screens. Generally, this requires reducing the quantity of textual information to a minimum and sizing any text so that it is legible. Often, a web advertiser will wish to create an on-line advertisement based on an existing web page. In such case, it may be necessary to reduce and resize any textual information so as to comply with these requirements.

The request specifies calendar and program data as explained above, which the web site operator checks for availability and type, defining to which group of users it belongs. If the required time slots are available for the requested channels, the site operator confirms the request and forwards the request to the web control room for final confirmation. On confirming the request, a status flag of the advertisement is changed so as to indicate that the advertisement is awaiting final confirmation from the web control room. At the web control room the advertisement is checked for content by human evaluators who either approve or reject the advertisement content and, in the case of rejection, may provide reasons therefore. If the advertisement (or other IP content) is approved by the web control center, its status is set to "approved" and the web control center bills the customer and the web site operator adds the advertisement and the scheduling information to the database **19**. The customer who is billed is typically the advertiser but may be any entity that is identified by a digital signature associated with the advertisement. If either of the requests for approval is rejected the status of the advertisement is set to "rejected" and the web control room informs the advertiser of the grounds for rejection, allowing the advertiser to change the request and re-send to the web site operator. Optionally, in such case the web server may be adapted to display to the advertiser the occupied timetable and suggest new timetable. Only those advertisements whose status flag indicates that they are approved by the web control room are actually available for transmission. The time slot and channel information associated with any advertisement that is not so approved remain available for other advertisements and will be shown as available to another advertiser who attempts to schedule an advertisement. Only when the advertisement is actually approved by the web site operator and its status is updated accordingly, are the transmission time and channel locked for use by other users.

The IP packet data may optionally be associated with predefined user-profiles that are also stored in the database **19** so that the advertisement or other IP data is sent only to specific TV-Internet Integration Boxes. Such user-profiles may be configured by the advertiser or by the user. Thus, for example, the invention allows supplementary or complementary program content to be associated with a TV broadcast, while providing the facility to view the supplementary program content only to specific subscribers, according to their user-profiles.

Thus, by way of non-limiting example, the invention allows sign language to be associated with a TV broadcast for the hard of hearing. It is known to display sign language in a corner of the screen, but since this is usually done indiscriminately it also apt to disturb the majority of viewers who do not need the sign language. The invention may be used to avoid this by conveying the sign language as IP content separate from main TV broadcast and allowing subscribers to register for a "sign language" service so that only registered subscribers receive the IP content. IP content files corresponding to sign language to be associated with different TV broadcasts are created as explained above, and stored in the database **19** together with user-profile data indicating which subscribers are registered to obtain the service. The user-profile data may contain data that further refines the target audience, such as categories of TV program alongside which the sign language is to be displayed. The user-profile data may further contain geographical data or language data that allows sign language corresponding to a target language to be conveyed to specific audiences. By such means, a TV program can be accompanied by a sign language overlay that is customized to a target language depending on the location of the IP target address or the language requested by the subscriber on registering for the service.

FIG. **5** is a block diagram showing the functionality of the TV-Internet Integration Box **16** shown in FIG. **1**. Thus, the TV-Internet Integration Box **16** comprises a first input **21** for receiving first data corresponding to a TV broadcast signal, typically being a cable TV signal and a second input **22** for receiving respective second data corresponding to IP packet data. The IP packet data may optionally be downloaded to specific TV-Internet Integration Boxes in accordance with predefined user-profiles associated with IP packet data and stored in the database **19**. A combiner unit **23** is coupled to the first and second inputs for combining the first data and the second data to form a combined video signal. A video output **24** is coupled to the combiner unit **23** for conveying the combined video signal to a TV set in a user premises. The TV set may be a conventional TV having a relatively low resolution screen for displaying a first image corresponding to the first data and having superimposed thereon a second image corresponding to the second data. Alternatively, it can be a computer having a video card for displaying a combined video image on a high resolution display monitor.

The combiner unit **23** is shown coupled to a processing unit **25** although in practice it may be implemented in software by the processing unit **25**. A memory **26** is coupled to the processing unit **25** for storing program data, such as profiles and program timetables etc. so as to allow the processing unit **25** to filter incoming IP content according to pre-defined profiles and other selection data. The processing unit **25** is also coupled to a user interface **27** that allows the subscriber to program the TV-Internet Integration Box **16** and store the program data in the memory **26**. An IR receiver **28** is adapted to receive IR commands from a remote control unit described below with reference to FIG. **6** and is coupled to a decoder **29**, which decodes a received IR signal and feeds it to the processing unit **25** for further processing.

FIG. **6** is a block diagram showing the functionality of a remote control unit **30** for interfacing with the TV-Internet Integration Box **16** shown in FIG. **5**. The remote control unit **30** includes a processing unit **31** coupled to a user interface **32**, typically having a keypad or pushbuttons for program selection and setting as well as other functions. The user interface **32** is coupled to an encoder **33** which is responsive to a pressed key or key combination for producing a corresponding IR signal that is transmitted by an IR transmitter **34** to the TV-Internet Integration Box **16** for receipt by the IR receiver **28** thereof.

As noted above, the keys may be color coded in correspondence with pre-arranged colors of commonly displayed icons, so that pressing on a specific key activates the displayed icon of the same color. Alternatively, at least some of the keys may be covered with transfers depicting commonly displayed icons, whereupon the appropriate keys or button for activating each icon are easily recognized.

The keys may also be programmed so that depressing the same key more than once automatically re-sizes the windows containing the TV broadcast and the Internet broadcast. For example, FIG. **7***a* shows the default situation where a TV screen **40** displays a conventional TV broadcast in a window **41** that is sized to occupy the whole area of the TV screen **40** and will be referred to as the primary window. Also shown are IP icons **42**, **43** and **44** each of which points to a different IP content that is streamed from a respective web site of known address. On pressing the key on the remote control unit **30** that corresponds to the icon **42**, the IP content corresponding thereto is displayed within a small window **45** (referred to as the secondary window) that is contained within the primary window **41** as shown in FIG. **7***d*. The icons **42**, **43** and **44** remain visible so that, if desired, the selected program can be changed by pressing a different key on the remote control unit **30**. On pressing a key a second time in succession, the IP content is re-sized so that its window **45** occupies substantially the whole area of the screen as shown in FIG. **7***c*. On pressing the key a third time in succession, the situation reverts to the default shown in FIG. **7***a* where the primary window **41** containing the TV broadcast occupies the whole area of the TV screen **40**. Thus, each key operates as a three-way toggle that switches between three different display modes.

The second data containing display information for the icons also contains data that informs the TV-Internet Integration Box **16** on which channel or channels the associated IP content is to be streamed and at what times. The second data also specifies the web site where the IP content is located. This is summarized in the following table:

TABLE I

Second data - definition			
Icon image	Channel	Time	Website of IP content
ICON.GIF	2; 23	19:30; 21:30	www.AB.com/adverts/123.htm

Thus, the second data depicted in Table I above shows that the icon image is contained in a file called ICON.GIF and that the IP content relating thereto is to be streamed on channels 2 and 23 at times 19:30 and 21:30, these being the start times. The end times are determined by the duration of the IP content to be streamed, which is downloaded from a web site whose name is shown in the table and is contained in the second data.

The second data is downloaded from the web server **14** whose web site address is known to the TV-Internet Integration Box **16**. In accordance with one embodiment, the processing unit **25** is programmed to access the web server **14** periodically and download current program data. For example, once every 2 to 3 hours the TV-Internet Integration Box **16** may automatically access the web server **14** to download the second data corresponding current program data for the next 3 hours as formatted according to Table I. The downloaded information is stored locally in the memory **26** of the TV-Internet Integration Box **16**. This allows the TV-Internet Integration Box **16** to pre-fetch IP content relating to all the currently displayed icons and to store the data relating thereto in the memory **26** thus obviating the need to access the web site of a selected icon for the purpose of downloading IP selected content. Since this carries the overhead of web access and downloading of data, which can be cumbersome particularly if there is insufficient bandwidth, pre-fetching in this manner ensures that initial IP content data will be immediately available on selection of one of the icons.

FIG. **8** is a flow diagram showing the principal actions carried out by the TV-Internet Integration Box when pre-fetching a digital broadcast signal. Thus, the TV-Internet Integration Box **16** periodically accesses the web server **14** and downloads current program data, constituting the second data. It then extracts from the current program data the image files of the current icons and stores them in the memory **26**. In like manner, it extracts the web sites of the IP content corresponding to the currently displayed icons and then accesses these sites to pre-fetch the respective IP content, which it likewise stores in the memory **26**. On selection of an icon, the TV-Internet Integration Box **16** opens a secondary window **45** within the primary window **41**, reads from the memory **26** the pre-fetched IP content and displays it in the secondary window **45**.

It will be understood that the TV-Internet Integration Box according to the invention may be at least partially implemented by a suitably programmed computer. Likewise, the invention contemplates a computer program being readable by a computer for executing the method of the invention. The invention further contemplates a machine-readable memory tangibly embodying a program of instructions executable by the machine for executing the method of the invention.

The invention claimed is:

1. A method for generating at a user's premises an overlay using video signals constituting a first data and overlay-enabling digital data constituting a second data, the method comprising:

(a) providing a combiner circuit at the user's premises, wherein:

the combiner circuit is coupled to a TV set and connected to a separate TV timer box or TV tuner in the TV set, at the user's premises, and

the combiner circuit is also connected through distinct networks to each of a video signal input providing video signals through the TV tuner box or TV tuner in the TV set, and an Internet data input providing overlay-enabling digital data over the Internet, wherein said video signals and said overlay-enabling digital data are received at the user's premises by different resources as mutually distinct and independent inputs, and wherein said overlay-enabling digital data includes at least:

a Web link indicating a website where content that is associated with said overlay-enabling digital data is stored,

an image indicative of the content associated with said overlay-enabling digital data, and

an overlay activation criterion; and

(b) processing at the user's premises said overlay-enabling digital data and generating at the user's premises a corresponding overlay only if said activation criterion is met, wherein generating an overlay includes:

generating at the user's premises a first display screen including at least a first portion corresponding to said video signals and a second portion overlaid over said first portion and corresponding at least to said image, and

associating the Web link with said second portion of the first display screen thereby allowing a user to cause the combiner circuit to retrieve said content, generate a second video display screen including at least a portion which corresponds to said content, and input the second display screen to said TV set.

2. The method according to claim **1**, wherein said overlay-enabling digital data is received at the user premises according to a pre-stored user profile.

3. The method according to claim **1**, further including:

receiving a command from a user at said user premises; and

responsive to said command, resizing said first portion and/or said second portion of said first display screen.

4. The method according to claim **1**, wherein the content stored at said website enables streaming of digital data over the Internet; and

said method further including: pre-fetching and buffering said digital data stream from said website, thereby allowing said digital data stream to be displayed substantially without delay upon redirection by the user.

5. The method according to claim **1**, wherein the overlay-enabling digital data comprises data representative of one or more second images, and for each of said one or more second images said overlay-enabling data comprises respective web site addresses where IP content associated with the respective second image is stored, and wherein said generating an overlay further includes within said first display said one or more second images.

6. The method according to claim **1**, wherein the overlay-enabling digital data is supplementary or complementary to the video signals.

7. The method according to claim **1**, wherein the image includes an icon that indicates to the user that digital data from Internet content is currently being provided and which provides an indication of a nature of said Internet content.

8. The method according to claim **1**, wherein the image contains textual information advising the user to press a particular button on a remote control unit.

9. The method according to claim **1**, wherein said overlay activation criterion includes at least one of the following: a timing information, data specifying one or more TV subscriber channels, a user command information.

10. The method according to claim **5**, further including:

periodically accessing a web server for downloading said overlay-enabling digital data;

extracting from the overlay-enabling digital data said one or more second images and the respective web sites corresponding to each of said second images;

retrieving and storing digital content from said web sites; and

if the overlay activation criterion is met and a user command that is associated with an image from amongst said one or more second images is identified, displaying the respective image from amongst the second images, accessing the respective web site associated with the displayed image and extracting and buffering content from the website.

11. The method according to claim **5**, further comprising displaying a respective IP content when a corresponding one of said one or more second images is selected.

12. The method according to claim **7**, including selecting specific Internet content by pressing a color-coded button on a remote control in accordance with a color of said icon.

13. A TV-Internet Integration circuit for generating at a user's premises an overlay using video signals constituting a first data and overlay-enabling digital data constituting a second data, the TV-Internet Integration Box comprising:

a combiner circuit at a user's premises coupled to a separate TV tuner box or TV tuner, wherein

the combiner circuit is also connected through distinct networks to each of a video signal input providing video signals through the TV tuner box or TV tuner, and an Internet data input providing overlay-enabling digital data over the Internet, wherein

said video signals and said overlay-enabling digital data are received at the combiner circuit at the user's premises by different resources as mutually distinct and independent inputs, and

wherein said overlay-enabling digital data includes at least:

a Web link indicating a website where content that is associated with said overlay-enabling digital data is stored;

an image indicative of the content associated with said overlay-enabling digital data; and

an overlay activation criterion, wherein

the combiner circuit is responsive to an overlay activation criterion being met for generating a corresponding overlay, including:

generating at the user's premises a first display screen including at least a first portion corresponding to said video signals and a second portion overlaid over said first portion and corresponding at least to said image, and

associating the Web link with said second portion of the first display screen thereby allowing a user to cause the combiner circuit to retrieve said content, and generate a second video display screen including at least a portion which corresponds to said content; and

a video output interface, coupled to or integrated within the combiner circuit and configured to be coupled to a video input of said TV set and to display said first display screen or said second video display screen.

14. The TV-Internet Integration circuit according to claim **13**, wherein said overlay-enabling digital data is received at the user premises according to a pre-stored user-profile.

15. The TV-Internet Integration circuit according to claim **13**, further including:

a command input for receiving a command from a user at said user premises; and

a frame adjuster for resizing said first portion and/or said second portion of said first display screen in response to said command.

16. The TV-Internet Integration circuit according to claim **13**, further including:

a receiver for receiving a digital data stream, wherein the stream of the digital data is enabled by the content stored at said website; and

a processing unit for pre-fetching and buffering said digital data stream from said website, thereby allowing said digital data stream to be displayed substantially without delay upon redirection by the user.

17. The TV-internet Integration circuit according to claim **13**, wherein the overlay-enabling digital data comprises data representative of one or more second images, and for each of said one or more second images said overlay-enabling data comprises respective web site addresses where IP content associated with the respective second image is stored,

and wherein the combiner circuit is configured to:

periodically access a web server for downloading said overlay-enabling digital data;

extract from the overlay-enabling digital data said one or more second images and the respective web sites corresponding to each of said second images;

retrieve and store digital content from said web sites; and

if the overlay activation criterion is met, and a user command that is associated with an image from amongst said one or more second images is identified, display the respective image from amongst the second images, access the respective web site associated with the displayed image and extract and buffer content from the website.

18. The TV-Internet Integration circuit according to claim **13**, wherein the image includes an icon that indicates to the user that digital data from Internet content is currently being provided and which provides an indication of a nature of said Internet content.

19. The TV-Internet Integration circuit according to claim **13**, wherein the image contains textual information advising the user to press a particular button on a remote control unit.

20. The TV-Internet Integration circuit according to claim **13**, wherein said overlay activation criterion includes at least one of the following: a timing information, data specifying one or more TV subscriber channels, a user command information.

21. The TV-Internet Integration circuit according to claim **18**, wherein the icon is colored so as to allow user selection of a specific Internet content by pressing a color-coded button on a remote control in accordance with a color of said icon.

* * * * *

UNITED STATES PATENT AND TRADEMARK OFFICE

CERTIFICATE OF CORRECTION

PATENT NO. : 9,407,969 B2
APPLICATION NO. : 13/336189
DATED : August 2, 2016
INVENTOR(S) : Merlin

It is certified that error appears in the above-identified patent and that said Letters Patent is hereby corrected as shown below:

In the claims,

In claim 13, line 4 (column 10, line 30):

"TV-Internet Integration Box" is replaced with "TV-Internet Integration circuit."

Signed and Sealed this
Twentieth Day of September, 2016

Michelle K. Lee

Michelle K. Lee
Director of the United States Patent and Trademark Office

EXHIBIT 5

to Declaration of Charles Cantine in Support of Plaintiff TVnGO's Opening Claim Construction Brief

US009794621B2

(12) **United States Patent**
Merlin

(10) **Patent No.: US 9,794,621 B2**
(45) **Date of Patent: *Oct. 17, 2017**

(54) **METHOD OF DISPLAYING INTERNET SIGNAL ON TV**

(71) Applicant: **TVNGO LTD. (BVI)**, Amsterdam (NL)

(72) Inventor: **Yaakov Merlin**, Raanana (IL)

(73) Assignee: **TVNGO LTD**, Amsterdam (NL)

(*) Notice: Subject to any disclaimer, the term of this patent is extended or adjusted under 35 U.S.C. 154(b) by 0 days.

This patent is subject to a terminal disclaimer.

(21) Appl. No.: **14/951,990**

(22) Filed: **Nov. 25, 2015**

(65) **Prior Publication Data**

US 2016/0261910 A1 Sep. 8, 2016

Related U.S. Application Data

(63) Continuation of application No. 13/336,189, filed on Dec. 23, 2011, now Pat. No. 9,407,969, and a (Continued)

(51) **Int. Cl.**
H04N 7/173 (2011.01)
G09G 5/00 (2006.01)
(Continued)

(52) **U.S. Cl.**
CPC ... ***H04N 21/44016*** (2013.01); ***H04N 21/4316*** (2013.01); ***H04N 21/4331*** (2013.01);
(Continued)

(58) **Field of Classification Search**
CPC H04N 21/431; H04N 21/4316; H04N 21/4438
See application file for complete search history.

(56) **References Cited**

U.S. PATENT DOCUMENTS

6,130,898 A 10/2000 Kostreski et al.
6,136,898 A 10/2000 Loza et al.
(Continued)

FOREIGN PATENT DOCUMENTS

CN 1469644 1/2004
JP 2000-217090 A 8/2000
(Continued)

OTHER PUBLICATIONS

Advanced Television Enhancement Forum (ATVEF) Copyright © ATVEF, 1998, 1999, Ver. V1.1r27, downloaded Jan. 17, 2017.

Primary Examiner — James R Marandi
(74) *Attorney, Agent, or Firm* — Cooper & Dunham LLP

(57) **ABSTRACT**

A TV-Internet Integration Box allows display of first data broadcast over a TV subscriber channel simultaneously together with second data broadcast over a digital data communications network has respective first and second inputs for receiving at a user premises the first data and the second data according to a user-profile associated with the second data. A combiner unit combines the first data and second data to form a combined video signal; and a video output coupled to the combiner unit conveys the combined video signal to a TV set in a user premises for displaying a first image corresponding to a first data and having a superimposed thereon a second image corresponding to the second data. A user at the user premises may interact with the second image for redirecting to the digital data communications network and displaying a program broadcast thereby is a least a portion of the TV set.

11 Claims, 7 Drawing Sheets

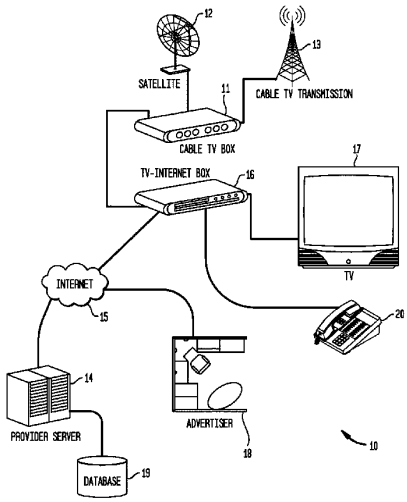

Related U.S. Application Data

continuation of application No. 11/794,825, filed as application No. PCT/IL2005/000035 on Jan. 11, 2005, now Pat. No. 8,132,220.

(51) **Int. Cl.**

H04N 21/44	(2011.01)
H04N 21/438	(2011.01)
H04N 21/443	(2011.01)
H04N 21/462	(2011.01)
H04N 21/4782	(2011.01)
H04N 21/643	(2011.01)
H04N 21/433	(2011.01)
H04N 21/61	(2011.01)
H04N 21/81	(2011.01)
H04N 21/854	(2011.01)
H04N 21/431	(2011.01)

(52) **U.S. Cl.**

CPC ***H04N 21/4381*** (2013.01); ***H04N 21/4438*** (2013.01); ***H04N 21/4622*** (2013.01); ***H04N 21/4782*** (2013.01); ***H04N 21/6118*** (2013.01); ***H04N 21/6125*** (2013.01); ***H04N 21/6143*** (2013.01); ***H04N 21/64322*** (2013.01); ***H04N 21/812*** (2013.01); ***H04N 21/854*** (2013.01); *H04N 21/431* (2013.01)

(56) **References Cited**

U.S. PATENT DOCUMENTS

6,240,555	B1	5/2001	Shoff et al.	
6,351,270	B1	2/2002	Nishikawa et al.	
6,501,557	B1	12/2002	Abe	
6,606,746	B1	8/2003	Zdepski et al.	
6,727,918	B1	4/2004	Nason	
6,760,324	B1	7/2004	Scott et al.	
6,778,559	B2	8/2004	Hyakutake	
7,124,430	B2 *	10/2006	Aratani	H04N 1/00424 348/E5.103
7,340,457	B1 *	3/2008	Killian	G06Q 30/02
7,546,902	B2	11/2008	Kikinis	
2001/0003212	A1	6/2001	Marler et al.	
2002/0007493	A1 *	1/2002	Butler	H04N 5/44543 725/109
2002/0056129	A1	5/2002	Blackketter et al.	
2002/0088004	A1	7/2002	Kitsukawa et al.	
2002/0093594	A1	7/2002	Kikinis	
2004/0064835	A1	4/2004	Bellwood et al.	
2004/0107437	A1 *	6/2004	Reichardt	G06Q 30/0241 725/37
2004/0221308	A1	11/2004	Cuttner et al.	

FOREIGN PATENT DOCUMENTS

JP	2001509327		7/2001
JP	2003-18575	A	1/2003
JP	2003069950		4/2003
JP	2003-323370	A	11/2003
JP	2004-7323	A	1/2004
JP	2005510974		4/2005
RU	2239293		10/2004
WO	00/07372		2/2000
WO	00/08855		2/2000
WO	WO 00/08855		2/2000
WO	WO 02/19689	A	3/2002
WO	WO 0219689	A2	6/2002
WO	WO0347249		6/2002
WO	02/19689		7/2002
WO	03/015406		2/2003

* cited by examiner

FIG. 1

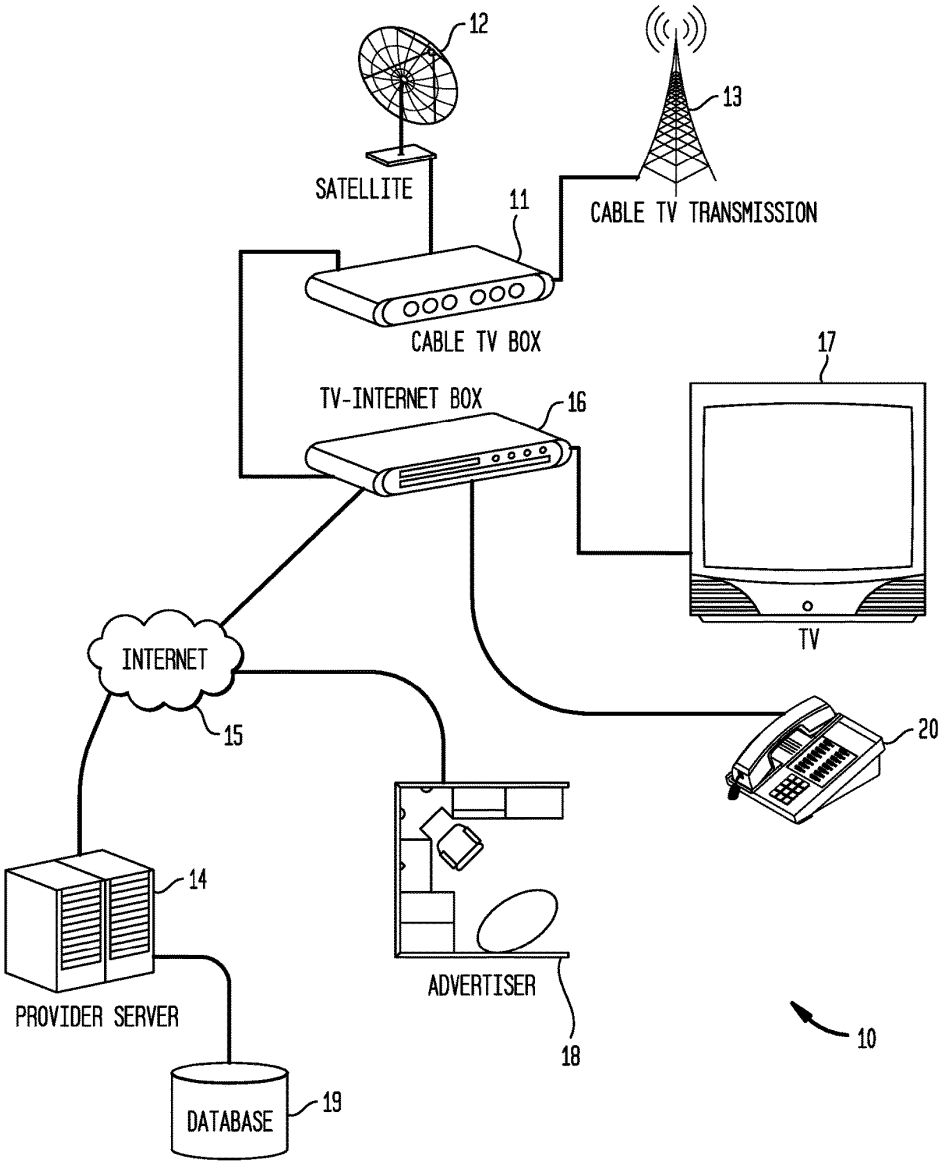
12
13
SATELLITE
11
CABLE TV TRANSMISSION
CABLE TV BOX
17
TV-INTERNET BOX
16
TV
INTERNET
15
20
14
ADVERTISER
PROVIDER SERVER
18
10
DATABASE
19

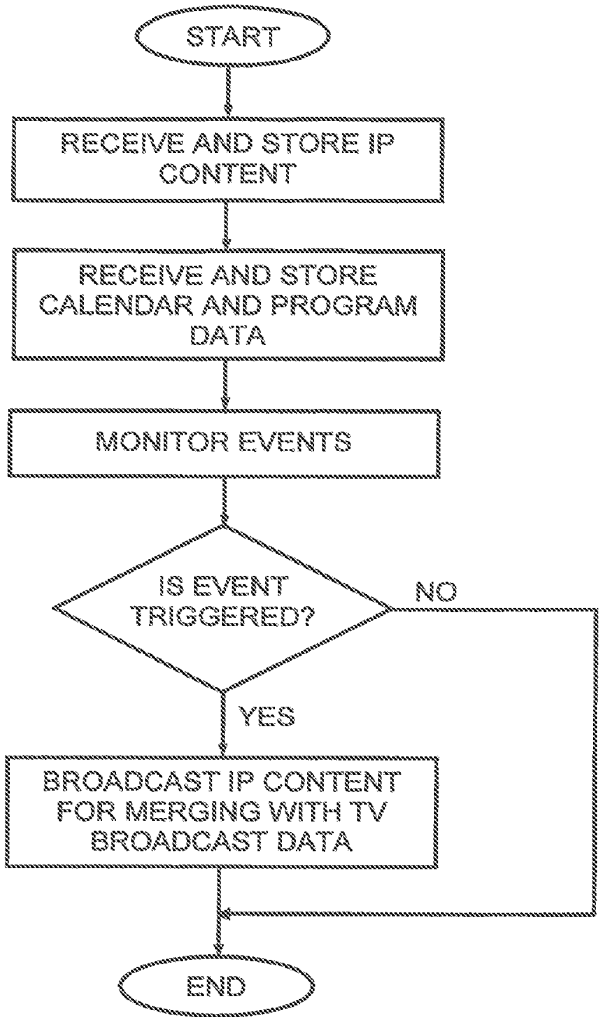
START
RECEIVE AND STORE IP CONTENT
RECEIVE AND STORE CALENDAR AND PROGRAM DATA
MONITOR EVENTS
IS EVENT TRIGGERED?
NO
YES
BROADCAST IP CONTENT FOR MERGING WITH TV BROADCAST DATA
END

FIG. 2

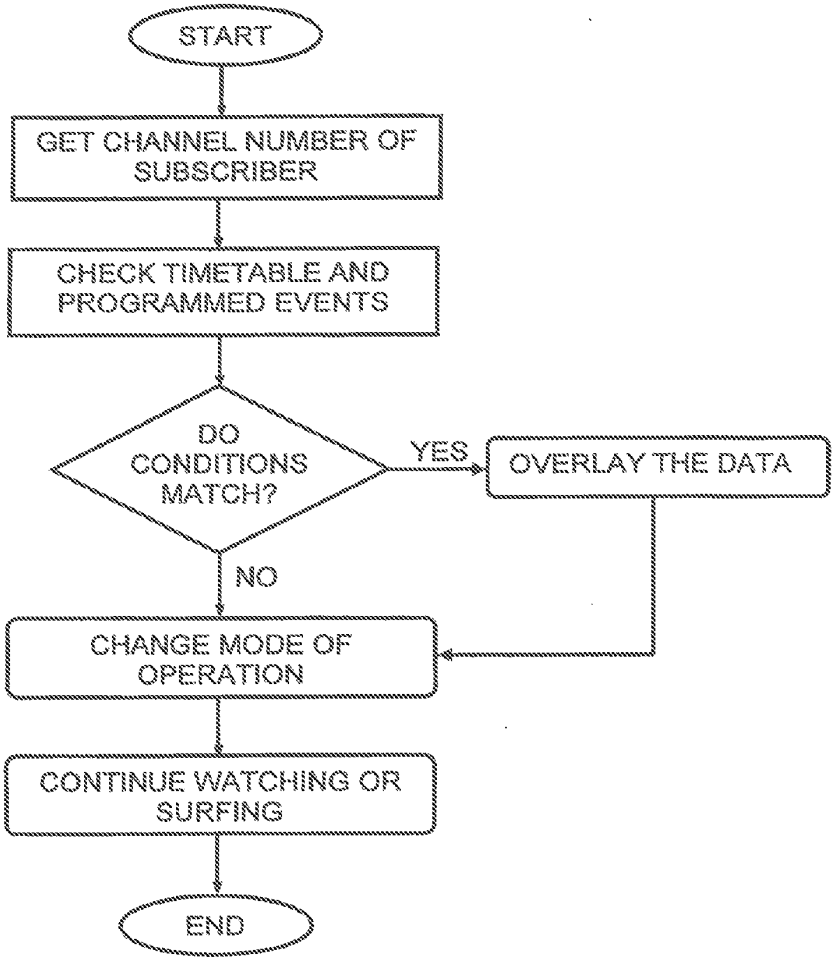
START
GET CHANNEL NUMBER OF SUBSCRIBER
CHECK TIMETABLE AND PROGRAMMED EVENTS
DO CONDITIONS MATCH?
YES
OVERLAY THE DATA
NO
CHANGE MODE OF OPERATION
CONTINUE WATCHING OR SURFING
END

FIG. 3

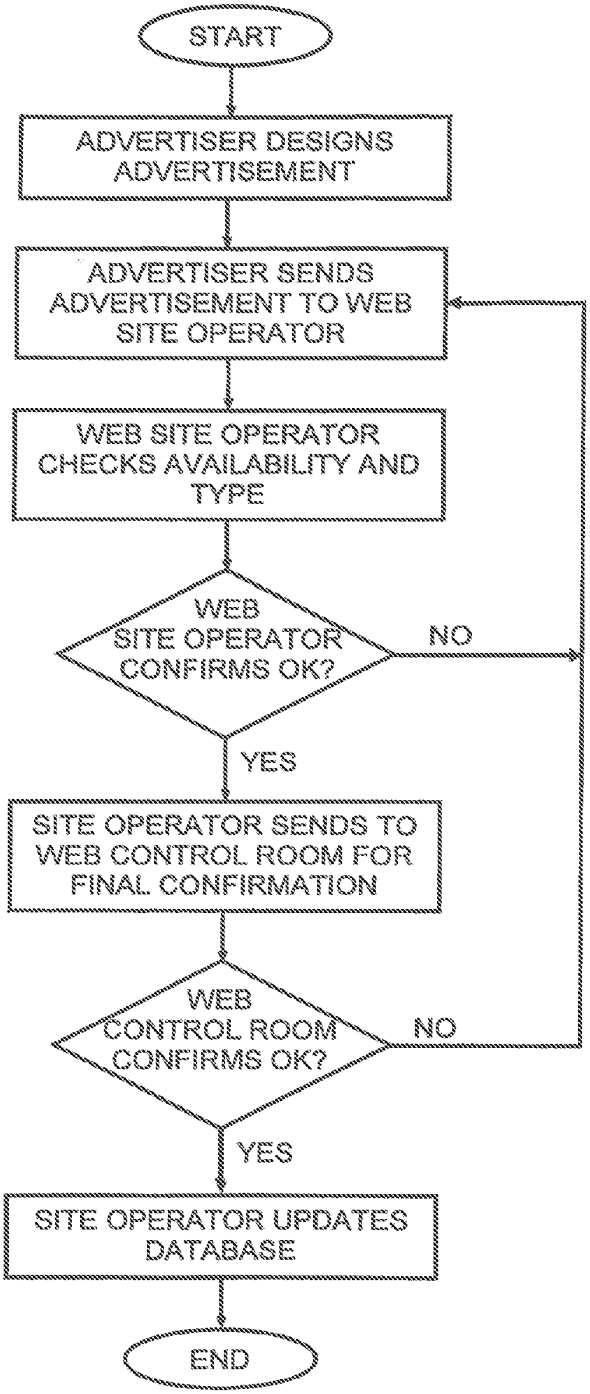
START
ADVERTISER DESIGNS ADVERTISEMENT
ADVERTISER SENDS ADVERTISEMENT TO WEB SITE OPERATOR
WEB SITE OPERATOR CHECKS AVAILABILITY AND TYPE
WEB SITE OPERATOR CONFIRMS OK?
NO
YES
SITE OPERATOR SENDS TO WEB CONTROL ROOM FOR FINAL CONFIRMATION
WEB CONTROL ROOM CONFIRMS OK?
NO
YES
SITE OPERATOR UPDATES DATABASE
END

FIG. 4

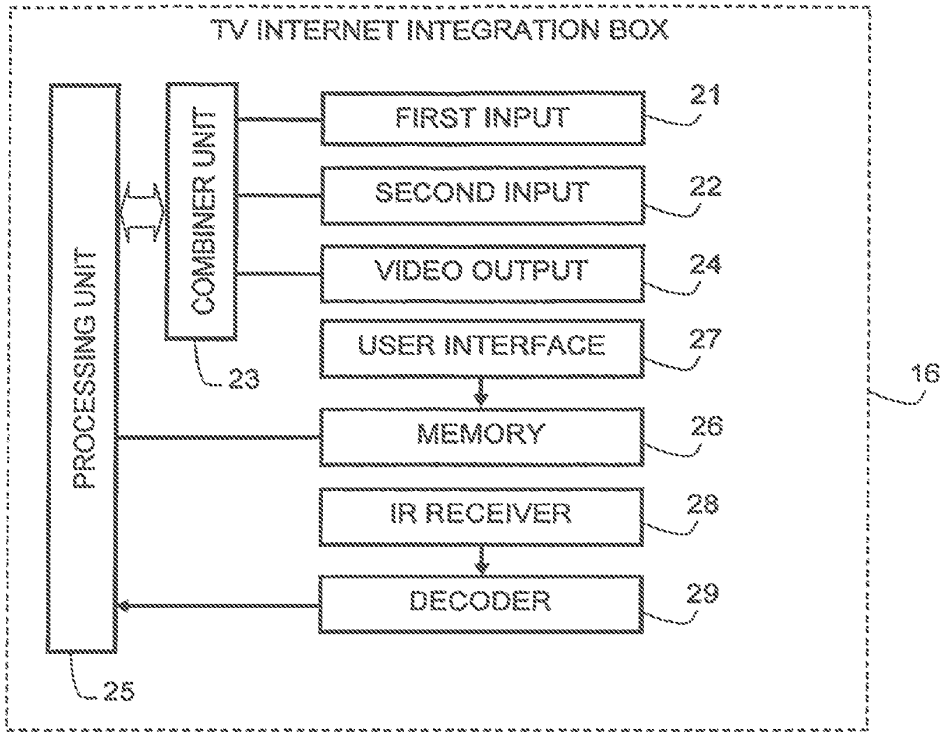
TV INTERNET INTEGRATION BOX
PROCESSING UNIT
COMBINER UNIT
FIRST INPUT
SECOND INPUT
VIDEO OUTPUT
USER INTERFACE
MEMORY
IR RECEIVER
DECODER
21
22
24
27
26
28
29
23
25
16

FIG. 5

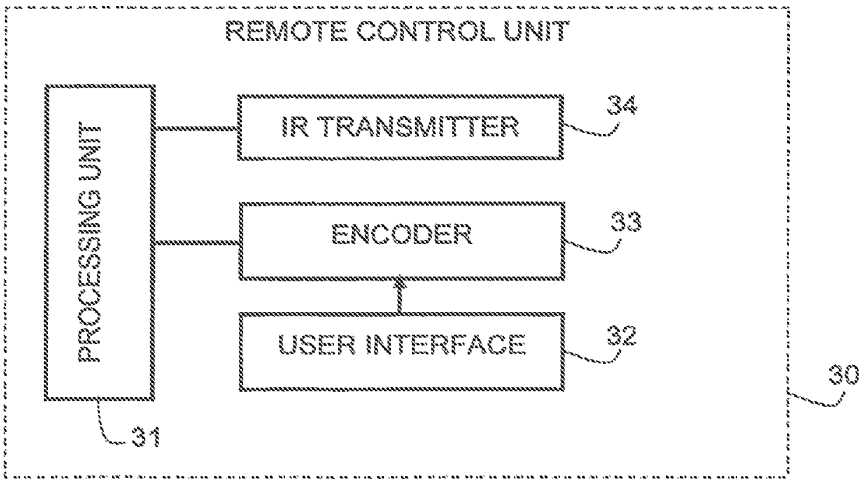
REMOTE CONTROL UNIT
PROCESSING UNIT
IR TRANSMITTER
ENCODER
USER INTERFACE
34
33
32
31
30

FIG. 6

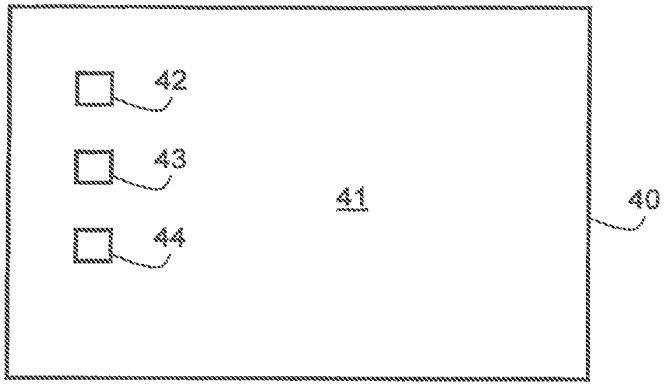

FIG. 7a

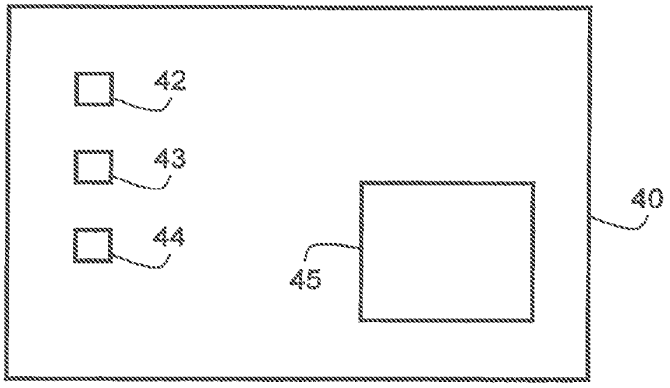

FIG. 7b

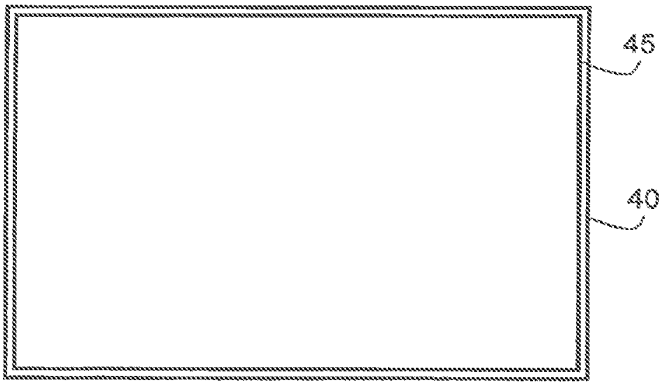

FIG. 7c

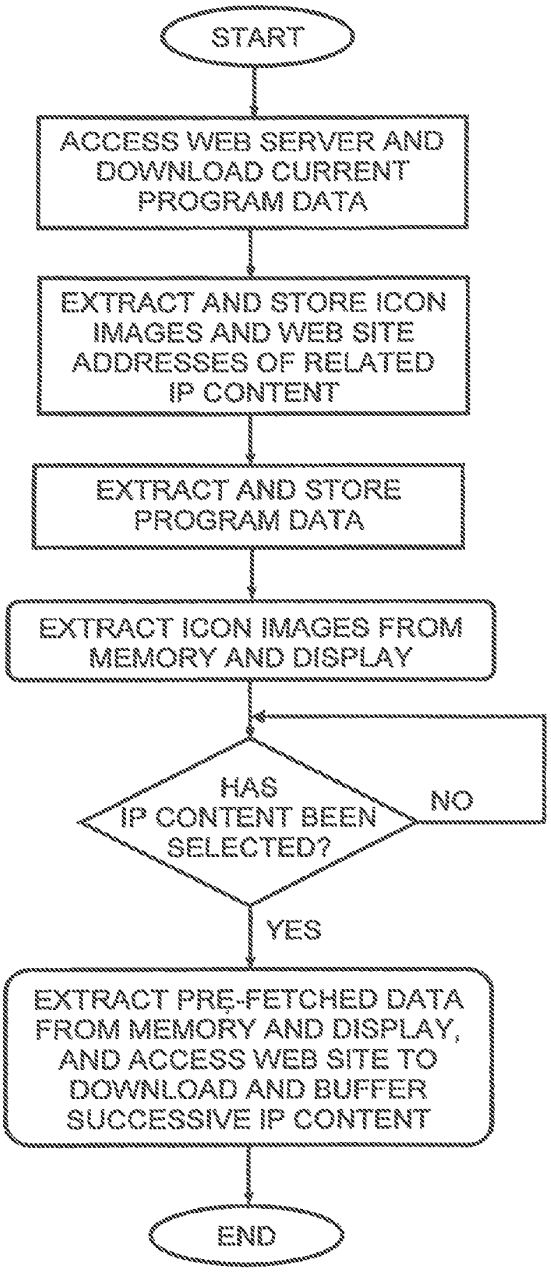
START
ACCESS WEB SERVER AND DOWNLOAD CURRENT PROGRAM DATA
EXTRACT AND STORE ICON IMAGES AND WEB SITE ADDRESSES OF RELATED IP CONTENT
EXTRACT AND STORE PROGRAM DATA
EXTRACT ICON IMAGES FROM MEMORY AND DISPLAY
HAS IP CONTENT BEEN SELECTED?
NO
YES
EXTRACT PRE-FETCHED DATA FROM MEMORY AND DISPLAY, AND ACCESS WEB SITE TO DOWNLOAD AND BUFFER SUCCESSIVE IP CONTENT
END

FIG. 8

METHOD OF DISPLAYING INTERNET SIGNAL ON TV

CROSS-REFERENCE TO RELATED APPLICATIONS

This application is a continuation of U.S. patent application Ser. No. 13/336,189 filed Dec. 23, 2011 and allowed Oct. 16, 2005, which is a continuation of U.S. patent application Ser. No. 11/794,825, filed Jul. 6, 2007 and now U.S. Pat. No. 8,132,220, which is a national stage entry of PCT/IL/00035 filed Jan. 11, 2005. This application is related to two application that also are continuations of U.S. patent application Ser. No. 11/794,825: (1) U.S. patent application Ser. No. 13/336,219, filed Dec. 23, 2011 and now U.S. Pat. No. 9,124,945, and (2) U.S. patent application Ser. No. 13/336,239, filed Dec. 23, 2011 and allowed Sep. 18, 2015.

FIELD OF THE INVENTION

This invention relates to the broadcast of audio/video content over the TV infrastructure Internet.

BACKGROUND OF THE INVENTION

With the proliferation of cable TV and the high bandwidth currently available for the Internet, which promises to increase even more in the near future, Internet TV is fast becoming a viable alternative to regular and cable TV broadcast channels. Moreover, Internet TV is not subject to the government licensing laws required by cable and broadcast TV channels and thus offers programs that may not be obtainable using regular and cable TV broadcast channels.

It is not uncommon for Internet broadcasters to offer near DVD-quality movies that can be viewed either using video streaming or downloaded to the hard disk of a subscriber's computer for viewing "off-line". The video quality of such movies is vastly superior to that obtainable on a regular TV set, owing to the high resolution associated with computer displays that cannot presently be matched by TV screens. However, this is not particularly troublesome where only pictures are displayed; but it becomes a problem when textual information is displayed that is formatted for high resolution computer monitors since the text is then barely legible when displayed on lower resolution TV screens. Thus, if a regular TV set is used to display Internet content that is rich in text, the resulting display quality is poor.

It would therefore be a significant benefit to users of low resolution displays such as TV screens, to be able to watch regular and cable TV broadcasts and to integrate with Internet content on demand. In particular, it would be desirable to provide such a user with a visual and legible indication when viewing a regular or TV broadcast of available Internet movies or other programs and allow him to use the displayed indication to integrate with a desired Internet broadcast.

These requirements have been only partially addressed in the art WO 00/08855 to United Video Properties, Inc. and entitled "A system and method for synchronising television-related product content and internet-delivered information" describes a screen generator that merges program guide data with a TV image and superimposes an Interactive TV Guide on the regular TV image.

US 2002/0093594 (Kikinis) entitled "Method and system for identifying addressing data within a television presentation" illustrates in FIG. **3** the common connection of TV and Internet to a set-top box.

U.S. Pat. No. 6,606,746 to Opened, Inc. entitled "Interactive television system and method for displaying a graphical user interface using insert pictures" discloses interactive television having a compressed background picture and one or more compressed insert pictures commonly connected to a TV-Internet Integration box. The compressed insert pictures represent Items of a GUI. The local system i.e. computer "pastes" the insert pictures into the background image.

U.S. Pat. No. 6,130,898 to Bell Atlantic Network Services, Inc., entitled "Simulcasting digital video programs for broadcast and interactive services" teaches an interactive TV system where TV broadcast data is merged with Internet data. To this end, public wireless packet data network is combined with a broadband digital broadcast network at a plurality of transmitter sites. Customer premises receiving systems include a receiving antenna and one or more digital entertainment terminals. The terminal includes a channel selector and digital receiver for capturing a digital transport stream from a selected channel. A processor converts selected program information from the transport stream for presentation, e.g., via a television set. The terminal also includes a CPU controlling the operation of the channel selector and the processor in response to user inputs.

None of these references appears to disclose the ability to merge broadcast TV signals with IP packet data at a customer site, specifically in such a manner that a conventional TV set is able to display Internet program selection data while viewing a TV broadcast program and to use the selected data to select an Internet channel, such as a movie, for display on the TV set instead of the TV broadcast program.

SUMMARY OF THE INVENTION

It is therefore an object of the present invention to provide a TV-Internet Integration Box having the ability to merge broadcast TV signals with IP packet data at a customer site.

It is a further object that such a TV-Internet Integration Box permits a TV set connected thereto to display Internet program selection data while viewing a TV broadcast program and to use the selected data to select an Internet movie for display instead of the TV broadcast program.

These objectives are realized in accordance with a first aspect of the invention by a method for facilitating first data broadcast over a TV subscriber channel to be displayed simultaneously together with second data broadcast over a digital data communications network, the method comprising:

receiving said first data and said second data;

combining said first data and said second data to form a combined video signal; and

conveying said combined video signal to a TV set in a user premises for displaying a first image corresponding to the first data and having superimposed thereon a second image corresponding to the second data, said second image being configured to allow a user at said user premises to interact therewith for redirecting to the digital data communications network and displaying a program broadcast thereby in at least a portion of the TV set.

In accordance with a second aspect of the invention there is provided a method for facilitating first data broadcast over a TV subscriber channel to be displayed simultaneously together with second data broadcast over a digital data communications network, the method comprising:

receiving said first data at a user premises;

receiving said second data at the user premises according to a user-profile associated with the second data;

combining said first data and said second data to form a combined video signal; and

conveying said combined video signal to a TV set in a user premises for displaying a first image corresponding to the first data and having superimposed thereon a second image corresponding to the second data, said second image being configured to allow a user at said user premises to interact therewith for redirecting to the digital data communications network and displaying a program broadcast thereby in at least a portion of the TV set.

BRIEF DESCRIPTION OF THE DRAWINGS

In order to understand the invention and to see how it may be carried out in practice, a preferred embodiment will now be described, by way of non-limiting example only, with reference to the accompanying drawings, is which:

FIG. **1** is pictorial representation showing a TV-Internet Integration Box according to the invention connected to a mixed broadcast network for combining Internet and broadcast TV signals;

FIG. **2** is a flow diagram showing the principal actions carried out by the web server shown in FIG. **1**;

FIG. **3** is a flow diagram showing the principal actions carried out by the TV-Internet Integration Box shown is FIG. **1**;

FIG. **4** is a flow diagram showing the principal actions carried out by an IP content provider such as an advertiser for creating IP content for overlaying by the TV-Internet Integration Box with a broadcast TV signal;

FIG. **5** is a block diagram showing the functionality of the TV-Internet Integration Box shown in FIG. **1**;

FIG. **6** is a block diagram showing the functionality of a remote control unit for interfacing with the TV-Internet Integration Box shows in FIG. **5**;

FIGS. **7***a*, **7***b* and **7***c* are pictorial representations showing a TV set during different stages of receiving and displaying combined Internet and broadcast TV signals; and

FIG. **8** is a flow diagram showing the principal actions earned out by the TV-Internet Integration Box when prefetching a digital broadcast signal.

DETAILED DESCRIPTION OF EXEMPLARY EMBODIMENTS

FIG. **1** is pictorial representation showing a mixed broadcast network **10** having a Cable TV Box **11** coupled to a satellite **12** and a Cable TV transmitter **13** for receiving a cable TV broadcast signal (constituting first data). An Internet broadcast signal comprising IP packet data (constituting second data) is streamed from a web server **14** via the Internet **15** (constituting a digital data communications network) to a TV-Internet Integration Box **16** for display on a TV set **17** coupled thereto. The TV set **17** may be constituted by a computer having a video card and a high resolution display monitor. However, the principal benefit of the invention is obtained when a regular TV set having low resolution is used, since such a configuration has not so far been used to integrate Internet programs with conventional TV broadcasts in the manner proposed by the invention. The TV-Internet Integration Box **16** is connected to the Cable TV Box **11** for combining the broadcast TV signals received by the Cable TV Box **11** with the IP packet date broadcast via the Internet **15**. Also shown is as advertiser **18** having a computer coupled to the Internet **15** for downloading advertising content to the web server **14** for storage in a database **19** and a telephone **20** coupled to the TV-Internet Integration Box **16** for feeding telephony signals to the TV-Internet Integration Box **16**, which combines the received telephony signals with video data received from the Cable TV Box **11** and/or the Internet **15**.

The advertiser **18** typically pays for specific time slots and for one or mote specific channels during which his advertisement will be broadcast. Thus, in addition to the advertising content which is prepared and then stored on the web server **14** in known manner, the advertiser **18** also specifies when the advertisement is to be broadcast and on which TV channel or channels. By such means, a sports advertiser can request time during the interval of a football match to broadcast a commercial, while a toy advertiser would obviously prefer to broadcast a commercial, during a children's TV program. Different time slots may be charged out at different rates depending on the ratings associated with the associated TV program. After selecting one or more time slots, the advertisement content as well as the selected time slots and program data are stored in the database **19** accessed the web server **14**.

FIG. **2** is a flow diagram showing the principal actions carried out by the web server **14**, which is responsive to an event timetable stored and updated in the database **19**. To this end, an IP content provider interfaces with the web server for creating IP content and associating therewith calendar and program data indicating dates, times and channels in respect of which the IP content is to be streamed to the customer premises. Once this is done, the web server **14** monitors events, which are triggered in known manner causing the web server **14** to extract from the database pre-stored ID content for streaming over the Internet **15** to the TV-Internet Integration Box **16**, where it is processed as described below with reference to FIG. **3** of the drawings.

FIG. **3** is a flow diagram showing the principal actions carried out by the TV-Internet Integration Box **16**. In accordance with one embodiment of the invention, the subscriber selects what kind of IP content he wishes to receive and in respect of which program details, such as icons and/or textual data, are to be displayed together with the TV broadcast data. For example, a subscriber may wish to block certain types of program material or may wish to receives details thereof only during limited hours, for example when the children are asleep. To this end, the subscriber is able to program the TV-Internet Integration Box **16** in much the same way that a video cassette recorder is programmed so as to store in the memory **25** a timetable indicating what type of IP data is to be displayed and when. The timetable is updated as and when required by the subscriber. The TV-Internet Integration Box **16** is adapted to check the timetable periodically and to filter out incoming IP content that is either of a type that is not required or that is broadcast during an unauthorized time window. By such means, an additional layer of authorization may be provided to that stored in the database **19** for access by the web server **14**, thus allowing pre-fetching of IP content and storage in the memory **25** of the TV-Internet Integration Box **16**. Upon detecting a matching event, corresponding to received IP content that is of interest to the subscriber, the TV-Internet Integration Box **16** overlays the matched IP content with the current broadcast and displays the new integrated video on the subscriber's TV set **17**. For example, the matched information may be an icon that indicates to the subscriber that an Internet movie is currently being broadcast; or it may be as advertisement or information related to the TV program being broadcast.

The subscriber can respond to the overlaid data using a remote control unit, described below with reference to FIG. **6** of the drawings, which is programmed to internet with the

displayed icon or other data that is overlaid on the TV broadcast. To this end, the displayed IP content may optionally contain textual information advising the subscriber to press a particular button on the remote control unit. Alternatively, buttons on the remote control unit may be color-coded and the icon may be colored so as to indicate to the subscriber which color-coded button to press for selection of the corresponding IP content. If the subscriber responds to the overlaid data by pressing a button on the remote control unit, the TV-Internet Integration Box **16** receives the signal from the remote control unit and changes the priorities for use with the Picture-in-Picture (PIP) technique to display the TV broadcast in a reduced window and to show the other media, i.e. the IP content, in an enlarged window. The IP content can be a custom designed web page for TV, or a game or advertisement movie or any other Information placed on the matched record. PIP techniques are known per se and allow a video or graphics image to be Inserted on top of a movie clip and to be positioned and sized. An Effect In and Effect Out may be used to lade or move the inserted video to the screen. In accordance with one such technique, the bulk of the IP content e.g. corresponding to a movie may be rendered transparent so as to provide a transparent window through, which an icon e.g. relating to the movie is visible. The video content of the TV broadcast is displayed in one window and the IP content in another window. Since the bulk of the IP content is transparent it will remain invisible to the subscriber, while the icon (or text) will, be visible since it is opaque. On selecting the displayed icon, the attributes may simply be reversed so as to hide the icon while displaying the movie or other content. At the same time, the TV broadcast may be re-sized either to display it in a minimized window it the case that it is to be suppressed altogether, or to display it superimposed on the IP content so that both are visible at the same time in different, possibly overlapping, windows.

FIG. **4** is a flow diagram showing the principal actions carried out by an IP content provider such as an advertiser for creating IP content for overlaying by the TV-Internet Integration Box with a broadcast TV signal. Thus, the advertiser designs an advertisement and sends it together with a request to a web sits link via the Internet or off-line as required. Since the IP content is intended for display on a low resolution TV screen, any textual information that forms part of the IP content is formatted so as to be legible when displayed on lower resolution TV screens. Generally, this requires reducing the quantity of textual information to a minimum and sizing any text so that it is legible. Often, a web advertiser will wish to create an on-line advertisement based on an existing web page. In such case, it may be necessary to reduce and resize any textual information so as to comply with these requirements.

The request specifies calendar and program data as explained above, which the web site operator checks for availability and type, defining to which group of users it belongs. If the required time slots are available for the requested channels, the site operator confirms the request and forwards the request to the web control room for final confirmation. On confirming the request, a status flag of the advertisement is changed so as to indicate that the advertisement is awaiting final confirmation from the web control room. At the web control room the advertisement is checked for content by human evaluators who either approve or reject the advertisement content and, in the case of rejection, may provide reasons therefore. If the advertisement (or other IP content) is approved by the web control center, its status is set to "approved" and the web control center bills the customer and the web site operator adds the advertisement and the scheduling information to the database **19**. The customer who is billed is typically the advertiser but may be any entity that is identified by a digital signature associated with the advertisement. If either of the requests for approval is rejected the status of the advertisement is set to "rejected" and the web control room informs the advertiser of the grounds for rejection, allowing the advertiser to change the request and re-send to the web site operator. Optionally, in such case the web server may be adapted to display to the advertiser the occupied timetable and suggest new timetable. Only those advertisements whose status flag indicates that they are approved by the web control room are actually available for transmission. The time slot and channel information associated with any advertisement that is not so approved remain available for other advertisements and will be shown as available to another advertiser who attempts to schedule an advertisement. Only when the advertisement is actually approved by the web site operator and its status is updated accordingly, are the transmission time and channel looked for use by other users.

The IP packet data may optionally be associated with predefined user-profiles that are also stored in the database **19** so that the advertisement or other IP data is sent only to specific TV-Internet Integration Boxes. Such user-profiles may be configured by the advertiser or by the user. Thus, for example, the invention allows supplementary or complementary program content to be associated with a TV broadcast, while providing the facility to view the supplementary program content only to specific subscribers, according to their user-profiles.

Thus, by way of non-limiting example, the invention allows sign language to be associated with a TV broadcast for the hard of hearing. It is known to display sign language in a corner of the screen, but since this is usually done indiscriminately it also apt to disturb the majority of viewers who do not need the sign language. The invention may be used to avoid this by conveying the sign language as IP content separate from main TV broadcast and allowing subscribers to register for a "sign language" service so that only registered subscribers receive the IP content. IP content files corresponding to sign language to be associated with different TV broadcasts are created as explained above, and stored, in the database **19** together with user-profile data indicating which subscribers are registered to obtain the service. The user-profile data may contain data that further refines the target audience, such as categories of TV program alongside which the sign language is to be displayed. The user-profile data may further contain geographical data or language data that allows sign language corresponding to a target language to be conveyed to specific audiences. By such means, a TV program can be accompanied by a sign language overlay that is customized to a target language depending on the location of the IP target address or the language requested by the subscriber on registering for the service.

FIG. **5** is a block diagram showing the functionality of the TV-Internet Integration Box **16** shown in FIG. **1**. Thus, the TV-Internet Integration Box **16** comprises a first input **21** for receiving first data corresponding to TV broadcast signal, typically being a cable TV signal and a second input **22** for receiving respective second data corresponding to IP packet data. The IP packet data may optionally be downloaded to specific TV-Internet Integration Boxes in accordance with predefined user-profiles associated with IP packet data and stored in the database **19**. A combiner unit **23** is coupled to the first and second inputs for combining the first data and

the second data to form a combined video signal. A video output **24** is coupled to the combiner unit **23** for conveying the combined video signal to a TV set in a user premises. The TV set may be a conventional TV having a relatively low resolution screen for displaying a first image corresponding to the first data and having superimposed thereon a second image corresponding to the second data. Alternatively, it can be a computer having a video card for displaying a combined video image on a high resolution display monitor.

The combiner unit **23** is shown coupled to a processing unit **25** although in practice it may be implemented in software by the processing unit **25**. A memory **25** is coupled to the processing unit **25** for storing program data, such as profiles and program timetables etc, so as to allow the processing unit **25** to filter incoming IP content according to pre-defined profiles and other selection data. The processing unit **25** is also coupled to a user interface **27** that allows the subscriber to program the TV-Internet Integration Box **16** and store the program data in the memory **26**. An IP receiver **28** is adapted to receive IR commands from a remote control unit described below with reference to FIG. **6** and is coupled to a decoder **29**, which decodes a received IR signal and feeds it to the processing unit **25** for further processing.

FIG. **6** is a block diagram showing the functionality of a remote control unit **30** for interfacing with the TV-Internet Integration Box **16** shown in FIG. **5**. The remote control unit **30** includes a processing unit **31** coupled to a user interface **32**, typically having a keypad or pushbuttons for program selection and setting as well as other functions. The user interface **32** is coupled to an encoder **33** which is responsive to a pressed key or key combination for producing a corresponding IR signal that is transmitted by an IR transmitter **34** to the TV-Internet Integration Box **16** for receipt by the IR receiver **28** thereof.

As noted above, the keys may be color coded in correspondence with pre-arranged colors of commonly displayed icons, so that pressing on a specific key activates the displayed icon of the same color. Alternatively, at least some of the keys may be covered with transfers depicting commonly displayed icons, whereupon the appropriate keys or button for activating each icon are easily recognized.

The keys may also be programmed so that depressing the same key more than once automatically re-sizes the windows containing the TV broadcast and the Internet broadcast. For example, FIG. **7***a* shows the default situation where a TV screen **40** displays a conventional TV broadcast in a window **41** that is sized to occupy the whole area of the TV screen **40** and will be referred to as the primary window. Also shown are IP icons **42**, **43** and **44** each of which points to a different IP content that is streamed from a respective web site of known address. On pressing the key on the remote control unit **30** that corresponds to the icon **42**, the IP content corresponding thereto is displayed within a small window **45** (referred to as the secondary window) that is contained within the primary window **41** as shown in FIG. **7***d*. The icons **42**, **43** and **44** remain visible so that, if desired, the selected program can be changed by pressing a different key on the remote control unit **30**. On pressing a key a second time in succession, the IP content is re-sized so that its window **45** occupies substantially the whole area of the screen as shown in FIG. **7***c*. On pressing the key a third time in succession, the situation reverts to the default shown in FIG. **7***a* where the primary window **41** containing the TV broadcast occupies the whole area of the TV screen **40**. Thus, each key operates as a three-way toggle that switches between three different display modes.

The second data containing display information for the icons also contains data that informs the TV-Internet Integration Box **16** on which channel or channels the associated IR content is to be streamed and at what times. The second data also specifies the web site where the IP content is located. This is summarized in the following table:

TABLE I

Second data - definition			
Icon image	Channel	Time	Website of IP content
ICON.GIF	2; 23	19:30; 21:30	www.AB.com/adverts/123.htm

Thus, the second data depicted in Table I above shows that the icon image is contained in a file called ICON.GIF and that the IP content relating thereto is to be streamed on channels 2 and 23 at times 19:30 and 21:30, these being the start times. The end times are determined by the duration of the IP content to be streamed, which is downloaded from a web site whose name is shown in the table and is contained in the second data.

The second data is downloaded from the web server **14** whose web site address is known to the TV-Internet Integration Box **16**. In accordance with one embodiment, the processing unit **25** is programmed to access the web server **14** periodically and download current program data. For example, once every 2 to 3 hours the TV-Internet Integration Box **16** may automatically access the web server **14** to download the second data corresponding current program data for the next 3 hours as formatted according to Table I. The downloaded information is stored locally in the memory **26** of the TV-Internet Integration Box **16**. This allows the TV-Internet Integration Box **16** to pre-fetch IP content relating to all the currently displayed icons and to store the data relating thereto in the memory **26** thus obviating the need to access the web site of a selected icon for the purpose of downloading IP selected content. Since this carries the overhead of web access and downloading of data, which can be cumbersome particularly if there is insufficient bandwidth, pre-fetching in this manner ensures that initial IP content data will be immediately available on selection of one of the icons.

FIG. **8** is a flow diagram, showing the principal actions carried out by the TV-Internet Integration Box when pre-fetching a digital broadcast signal. Thus, the TV-Internet Integration Box **16** periodically accesses the web server **14** and downloads current program data, constituting the second data. It then extracts from the current program data the image files of the current icons and stores them in the memory **26**. In like manner, if extracts the web sites of the IP content corresponding to the currently displayed icons and then accesses these sites to pre-fetch the respective IP content, which it likewise stores in the memory **26**. On selection of an icon, the TV-Internet Integration Box **16** opens a secondary window **45** within the primary window **41**, reads from the memory **26** the prefetched IP content and displays it in the secondary window **45**.

It will be understood that the TV-Internet Integration Box according to the invention may be at least partially implemented by a suitably programmed computer. Likewise, the invention contemplates a computer program being readable by a computer for executing the method of the invention. The invention further contemplates a machine-readable memory tangibly embodying a program of instructions executable by the machine for executing the method of the invention.

The invention claimed is:

1. A TV-Internet Integration process to combine, at a user's premises, TV channel video with Internet Protocol (IP) material, comprising:

receiving the TV channel video at a first input at the user's premises, receiving the IP material at a second input at the user's premises, and outputting display drive signals to a TV screen at the user's premises;

wherein (i) as received at the user's premises, the TV channel video conforms to a TV broadcast format standard; (ii) as received at the user's premises, the IP format material conforms to an IP format standard that is different from the TV broadcast format standard and (iii) the IP material is received via a path different from that for the TV channel video at least in part;

storing, in a memory, one or more overlays each identifying a respective source of IP format material;

selectively generating display drive signals that cause the TV screen to display the TV channel video received at the first input;

responding to an overlay activation signal by reading out the one or more overlays from the memory and generating display drive signals that cause the TV screen to display the one or more overlays; and

responding to a user's selection of one of the displayed overlays by generating display drive signals that cause the TV screen to display the IP material associated with the selected overlay and received at the second input;

wherein, depending on the user's selection at the user's premises, the TV screen displays, at respective times, the TV channel video received at the first input, the one or more overlays, and the IP material associated with the selected overlay and received at the second input.

2. The TV-Internet Integration process of claim **1** in which the display drive signals that cause the TV screen to display the one or more overlays cause the screen to display the one or more overlays over a concurrent display of the TV channel video on the screen.

3. The TV-Internet Integration process of claim **1** in which the display drive signals that cause the TV screen to display the one or more overlays cause the screen to display the one or more overlays in respective windows on the TV screen while the screen is displaying the TV channel video.

4. The TV-Internet Integration process of claim **1** in which the overlay activation signal is generated as a function of testing if specified conditions at the user's premises match contents of the memory.

5. The TV-Internet Integration process of claim **1** including pre-fetching one or more overlays and storing the one or more pre-fetched overlays in a memory at the user's premises for subsequent display on the TV screen.

6. The TV-Internet Integration process of claim **1** including pre-fetching IP material and storing the pre-fetched IP material in a memory at the user's premises for subsequent display on the TV screen.

7. The TV-Internet Integration process of claim **1** including providing a set top box decoding TV channel video and supplying the resulting decoded TV channel video to said first input.

8. The TV-Internet Integration process of claim **7** in which the IP material path bypasses the set top box.

9. The TV-Internet Integration process of claim **1** in which the TV screen displays at least one of the one or more overlays in response to a special overlay activation signal from an external source timed relative to an event in the TV channel video displayed on the TV screen.

10. The TV-Internet Integration process of claim **1** in which the TV screen displays one or more overlays that point to sources of IP material but not to specific IP material.

11. The TV-Internet Integration process of claim **1** including selectively processing, at the user's premises, an overlay activation signal per input from the user.

* * * * *

EXHIBIT 6

to Declaration of Charles Cantine in Support of Plaintiff TVnGO's Opening Claim Construction Brief

IN THE UNITED STATES DISTRICT COURT
FOR THE DISTRICT OF NEW JERSEY

TVnGO LTD. (BVI), Plaintiff, v. LG ELECTRONICS INC. and LG ELECTRONICS U.S.A., INC., Defendants.	Civil Action No. 1:18-cv-10238-RMB-KMW

DECLARATION OF MICHAEL SPRENGER, Ph.D. IN SUPPORT OF PLAINTIFF TVnGO'S OPENING CLAIM CONSTRUCTION BRIEF

TABLE OF CONTENTS

I. SUMMARY OF QUALIFICATIONS 1

II. MATERIALS CONSIDERED 5

III. ANALYSIS 5

A. Background of the Invention 5

B. The Asserted Patents 10

1. The ’220 Patent Invention 10

2. The ’945 Patent Invention 10

3. The ’339 Patent Invention 11

4. The ’969 Patent Invention 11

5. The ’621 Patent Invention 11

C. Term 1: “overlay activation criterion” 11

D. Term 2: “overlay-enabling digital data” 14

E. Term 3a: “Internet data source”/ Term 3b: “Internet data input” 16

F. Term 4: “over the Internet” 17

G. Term 5a: “overlay activation signal” 18

H. Term 5b: “special overlay activation signal” 20

I. Term 6: “combiner unit” 22

J. Term 7: “combiner circuit” 25

K. Term 8: “selectively process[ing] at the user’s premises [an overlay activation signal]” 30

L. Term 9: “depending on user selection at the user's premises the TV screen displays, at respective times, the TV channel video received at the first input, the overlays, and the IP material that the user has selected through the displayed overlays.” 33

M. Term 10: “depending on the user's selection [at the user's premises] the screen image is at respective times the TV channel video with or without overlays thereon and the IP material that the user has selected through the displayed overlays.” ... 36

N. Term 11: “depending on the user’s selection at the user’s premises, the TV screen displays, at respective times, the TV channel video received at the first input, the one or more overlays, and the IP material associated with the selected overlay and received at the second input.” 37

O. Term 12: “said overlay-enabling digital data is received at the user premises according to a pre-stored user[-]profile” 39

P. Term 13: "pre-fetching and buffering said digital data stream from said website" 40

Q. Term 14a: "pre-fetch IP material and store the pre-fetched material in the memory circuit" 40

R. Term 14b: "pre-fetching IP material and storing the pre-fetched IP material in a memory" 41

S. Term 15: "generate the overlay activation signal through testing if specified conditions match contents of the memory circuit." 42

T. Term 16: "the overlay activation signal is generated as a function of testing if specified conditions at the user's premises match contents of the memory [circuit]" 43

U. Term 17: "periodically access[ing] a web server for downloading said overlay-enabling digital data" 44

V. Term 18: "matching material stored in the memory with IP material available at the second input" 45

W. Term 19: "the image includes an icon that indicates to the user that digital data from Internet content is currently being displayed" 46

X. Term 20: "the image contains textual information advising the user to press a particular button on the remote control unit" 47

Y. Term 21: "a set top box configured to decode the TV channel video and supply decoded TV channel video to the first input of [the combiner circuit]" 48

Z. Term 22: "a special overlay activation signal from an external source timed relative to an event in the TV channel video displayed on the screen" 50

AA. Term 23: "the IP material path bypasses the set top box" 51

BB. Term 24: "the path through which [the combiner circuit] receives the IP material at its second input bypasses the set top box" 52

CC. Term 25: "processing unit" 53

DD. Term 26: "programmed processing unit" 56

1. I, Michael Sprenger, Ph.D. hereby declare as follows:

2. I have been retained on behalf of Plaintiff TVnGO. I am being compensated at the rate of $325 per hour. My compensation is in no way dependent on the outcome of this litigation. I understand that this declaration is being submitted with Plaintiff's Opening Claim Construction Brief.

3. I have been asked to provide my opinion regarding how a person of ordinary skill in the art (POSA) would understand certain terms and phrases of U.S. Patent Nos. 8,132,220 ("the '220 patent"); 9,124,945 ("the '945 patent"); 9,392,339 ("the '339 patent"); 9,407,969 ("the '969 patent"); 9,794,621 ("the '621 patent") (collectively, "the Asserted Patents").

I. SUMMARY OF QUALIFICATIONS

4. A copy of my CV is attached as an Appendix to this declaration.

5. I am currently a consultant with extensive background in digital video and audio encoding/transcoding/decoding technologies and standards (e.g., MPEG-2, MPEG-4, AVC/H.264, HEVC/H.265, Google VP8/VP9, AV1, Dolby Digital/AC-3, AAC, DTS), 2D and 3D video, imaging and encoding technologies, including stereoscopic/multiview/free-view 3D video display technologies, communication technologies, protocols and architectures (including twisted pair Digital Subscriber Line (DSL), coaxial and Hybrid Fiber-Coax (HFC), fiber optics, free-space optics and wireless), as well as broadcast systems.

6. I received my B.S., M.S., and Ph.D. in electrical engineering. In university research and industry environments during the 1980s and 1990s, I have studied and carried out research in computer and microprocessor architecture, computer graphics and image processing, network communication technologies and protocols, and multiprocessor systems. In the telecom and cable TV industry, starting in the 1990s, I have worked on video and communication

technology, from broadband networks, from video head-end design, streaming video architectures, video storage and distribution, all the way to video delivery to the end-user.

7. Over the course of my career, I have also acquired broad experience in computer programming, communication network architectures and protocols, digital and analog circuit technology, computer graphics, video processing and display technologies. I have specified the technical requirements for set-top boxes and media-enabled consumer electronics devices for large-scale video deployments by national network operators. In holding my various positions in research and industry, I have gained extensive experience in image acquisition, display technologies, associated circuitry, and processing algorithms.

8. I also have broad hands-on experience with video technology including extensive laboratory testing, configuration, calibration, evaluation and vendor selection of video-related devices (encoders and decoders for carrier deployment; video processors, video switching matrices, displays and projectors for internal testing). I have designed laboratory setups and selected displays suitable to evaluate video encoders, video configurations, and to compare and assess the visual quality of encoded video.

9. In 1991, I started working as a Research Assistant at the Optoelectronic Computing Systems Center (OCS), a research and education center of the University of Colorado at Boulder, where I worked on simulation, design, and implementation of optical deflection router and Wavelength Division Multiplexing (WDM) fiber-optic interconnects for ultra-highspeed shared memory multiprocessors. While at this position, I carried out key research and development for a novel adaptive wavelength-tracking WDM algorithm, which was ultimately awarded a patent.

10. I then started working at U.S. West Communications in 1998, which merged with Qwest Communications International, Inc. in 2000, and I was at the company when it merged with CenturyLink, Inc. in 2011 to become the third largest telecommunications company in the U.S. At U.S. West/Qwest/CenturyLink, I was responsible for Video encoder Requests for Information/Requests for Proposal (RFIs/RFPs), and evaluation and vendor selection (a formalized process in the industry to ensure a level playing field across prospective suppliers of hardware, software, and network management systems). I was a key technical lead in multiple rounds of IPTV system requirements (IPTV was an early form of streaming video) and coordinated standards activities in the IPTV, broadband access technology, home networking and consumer electronics space (DLNA) with other groups and organizations.

11. While at Qwest/CenturyLink, I served as editor and contributor to the Technical Advisory Board (TAB), reporting to the Chief Technology Officer (CTO), interfacing with large U.S. government customers, covering emerging technologies (e.g., fiber-optic networking, security, quantum communication, network traffic optimization, video technologies), assessing their impact onto CenturyLink and government customers' network and services as well as making recommendations for the eventual adoption of certain technologies. I also represented the company in several important telecommunications standards bodies, including the Full Service Access Network initiative (FSAN) for Fiber-To-The-Home (FTTH) Passive Optical Networks (PON), extending existing standards (BPON, GPON), and defining new high-speed, long-reach PON standards (XG-PON1, NG-PON2, XGS-PON). I also represented the company in the ITU-T, Broadband Forum, ATIS T1E1.4, ATIS Network Interface, Power & Protection (NIPP), Copper/Optical Access, Synchronization and Transport (COAST) and Network Access Interfaces (NAI) committees, as well as the Full Service Very high speed Digital Subscriber

Loop (FS-VDSL) standards bodies, defining new standards to improve rate and reach of xDSL technologies over existing twisted pair copper infrastructure (defining specifications for VDSL2, Dynamic Spectrum Management, cross-talk cancellation ("vectoring"), MIMO, G.fast). In 2013, I received the CenturyLink Government Services Award for Outstanding Contributions.

12. After over 16 years with Qwest/CenturyLink, I then began work as a Principal Architect of Optical Technologies at CableLabs in 2014. At CableLabs, I established a new fiber optic lab and carried out extensive fiber-optic lab work, setting up and verifying novel configurations, conducting physical layer tests, and analyzing results. As part of my work in the fiber-optic lab, I discovered a unique noise signal characteristic suitable for detection of a detrimental effect in so-called RF-over-Glass (RFoG) networks, known as Optical Beat Interference (OBI), and developed basic principles for multiple approaches to detect OBI via dedicated hardware and signal processing algorithms. I also developed a novel approach for intermediate-distance, low-complexity coherent modulation for ultra-high-speed fiber-optic communication (4-QAM, 8-QAM, 16-QAM and beyond).

13. After about a year and a half, I went back to CenturyLink as a Consultant and Principal Video Architect in 2016. I worked on Over-The-Top (OTT) video architectures, System-on-Chip (SoC) specification for next-generation Over-The-Top (OTT) Set-Top Box (STB), and was responsible for evaluation and vendor selection RFP for High Efficiency Video Codec (HEVC) / H.265 video encoder/transcoder applications. I also specified and upgraded CenturyLink's Video Demo & Evaluation Lab setup to support full 4K and High Dynamic Range (HDR) as well as emerging Wide Color Gamut (WCG) specifications using a multi-display setup and advanced projection system in a dedicated evaluation environment. I again served as CenturyLink representative for video-based standards bodies, including MPEG-DASH

(Dynamic Adaptive Streaming over HTTP) Interoperability Forum, CMAF (Common Media Application Format) and SVA (Streaming Video Alliance).

14. I am an inventor on 9 granted U.S. patents and 14 pending applications, all in the areas of visualization, enhanced graphical user interfaces (GUIs) and GUI navigation methods, novel content navigation methods, video streaming, dynamic high dynamic range and wide color gamut signaling, media processing, time-/place-shifting applications for set top boxes and in-home integration, Fiber-To-The-Home operational status, streaming broadband network health, advanced audio control mechanisms, video encoding artifact detection, agile digital rights management (DRM) for video content and secure imaging. I have approximately a dozen publications, was featured on the cover of OSP Magazine[1] (a widely read trade publication in the telecom industry), and wrote an article as part of the main cover story (OSP Magazine May 2013 issue, entitled "Game Changers 2013").

II. MATERIALS CONSIDERED

15. In reaching the conclusions set forth below, I have considered the Asserted Patents, their file histories, and the materials cited herein, and relied on my 30+ years of experience in this field.

III. ANALYSIS

A. Background of the Invention

16. All my opinions as to what a POSA would understand are as of January 2005, the earliest filing date, and hold true today too. I believe that, in early 2005, a POSA to which the Asserted Patents are directed would have had at least a B.S. degree in electrical engineering,

[1] Now called "ISE Magazine" (as of 2016).

computer engineering, computer science, or equivalent and/or would have had at least two to three years of relevant industry experience.

17. Television is a technology intended for displaying moving images (video) and audio signals (sound) in an end-user's location. In its early days, television signals were exclusively analog and transmitted via terrestrial antennae, using different standards in different parts of the world (NTSC - National Television System Committee, PAL - Phase Alternating Line, SECAM - Séquentiel couleur à mémoire, to name the three major color television standards). Starting in the late 1970s to early 1980s, new distribution mechanisms via coaxial cable and satellite became popular. In the 1990s, digital technology began to make inroads into acquisition, storage and distribution of TV programming. For example, the High Definition Television standard (HDTV), adopted in 1996, fundamentally relies on digital video technology for encoding, processing, distribution and display. In the late 1990s, HDTV started to become available via terrestrial signals, and early adopters such as cable TV and satellite TV operators.

18. Starting around the same time, there were many attempts to bring the IP material of the World Wide Web into the living room viewing experience. Numerous companies started to offer products and services that attempted to bring the web browsing experience of a personal computer to the TV. One company called WebTV, founded in 1995, offered a dedicated unit that functioned as a web access device, along with a keyboard and remote control. Essentially, it was the equivalent of a computer that used the TV as a display, rather than a computer monitor. Sony and Philips at one point distributed their own branded versions of WebTV. The device and service, like many similar products and services, suffered from the fact that there were a number of hurdles to the adoption of a web browsing experience on a traditional TV screen. One such obstacle was the need to purchase an additional device (the WebTV box), which was physically

large (about the size of a VCR) and relatively costly at that time, not helping consumer acceptance.

19. WebTV and many of its equivalents also required the use of a keyboard, which many consumers perceived as awkward and inconvenient. Keyboards are easy to use while sitting at a desk, but can be impractical to use while seated on a couch in the living room. Also, consumers resisted having keyboards placed on the coffee table in the living room. Furthermore, like any device with a graphical interface, WebTV and its competitors needed a way to navigate the user interface, but the use of a computer mouse is generally not feasible while seated in front of the TV. Some manufacturers tried to overcome this limitation by integrating joysticks or trackpads into the keyboard. Navigating web pages using joysticks is slow and touch-sensitive trackpads were not sufficiently mature at the time. Attempting to circumvent the need for a pointing device altogether, some manufacturers designed Web browsers with built-in support to navigate web pages using keys on the keyboard. Others included scroll wheels on the keyboard or on dedicated remote controls, but the experience left users unsatisfied, as they were not receiving a user-friendly experience. Additionally, web pages were developed for viewing on a computer screen, not a TV screen, leading to issues such as text that was hard to read, graphics that could not be handled by a TV screen and inaccurate color transmission.

20. Furthermore, most early Internet- or Web-enabled TVs required switching back and forth between TV mode and Web mode, which was not user-friendly and an additional obstacle to widespread adoption. This cumbersome approach was somewhat addressed by some manufacturers offering what they called a “virtual channel,” basically a reserved frequency slot in the TV’s channel line-up using broadcast TV technology (potentially also accessible via a

dedicated button on the remote control) where Web-type browsing functionality was simulated without the user actually accessing true IP material.

21. Yet another hurdle to bringing web browsing onto the TV screen is the seating distance from the screen, making small text hard if not impossible to read. Computer graphics systems offer a pixel-for-pixel match between the graphics adapter and the computer monitor. This is not necessarily the case on a TV. TVs offer numerous controls to adjust various characteristics of the picture on the screen, including brightness, contrast, sharpness, aspect ratio, and overscan compensation. Some of these have the potential to alter the picture significantly and make small text potentially very hard to read. Web browsers with zoom functions, or requiring websites to serve a version rendered in larger text and simpler layout, were some approaches to address readability, but did not find widespread use. WebTV was acquired by Microsoft in 1997 and rebranded as MSN TV in 2001. The company offered improved hardware and an accompanying service, but consumer acceptance was modest and Microsoft eventually discontinued the product around 2009 and the service (content arm) by 2013.

22. Overall, attempts to translate the web browsing experience from the computer onto the TV in the living room ultimately proved unsuccessful. A different approach was needed to combine the wealth of information accessible via the Internet with the traditional TV programming users were accustomed to. Rather than simply offering another way to navigate the World Wide Web on a TV, companies started exploring ways to augment TV programming beyond traditional TV electronic program guides offered by many cable and satellite providers. For example, as described in the Background of the TVnGO patents, OpenTV and Bell Atlantic offered simple supplemental graphics and text. This was the state of the art through the mid 2000s, around the time TVnGO began development of its technology.

23. TVnGO carried out pioneering work, several years ahead of the general industry, by achieving a breakthrough in how these two sources – traditional TV and IP material from the World Wide Web – are brought together. In January 2005, TVnGO filed its patent application disclosing:

> the ability to merge broadcast TV signals with IP packet data at a customer site, specifically in such a manner that a conventional TV set is able to display Internet program selection data while viewing a TV broadcast program and to use the selected data to select an Internet channel, such as a movie, for display on the TV set instead of the TV broadcast program.

See, e.g., '220 patent at 2:9-16.

24. TVnGO's innovative approach was a big step forward in how TV and Internet should be combined in a user-friendly manner, distinct from other approaches seen at that time. The system was non-obtrusive, comprehensive, and intuitive. In many ways it maximized the usability and accessibility of information obtained via the Internet and overlaid onto traditional TV content. Starting in the late 2000s, TV manufacturers began to introduce so-called "Smart TVs" – television sets with a user interface that allows access to streaming services and applications ("apps") through built-in Internet connectivity (wired and/or wireless), the ability to decode a multitude of video encoding formats, and functions that unified/combined traditional TV content with material obtained via the Internet. For example, dedicated apps provided direct access to video streaming content, while other apps offered access to weather information, sports scores, stock market updates, and similar kinds of information. These apps were quickly accessible without a complicated user interface and easy to navigate with a remote control. As we know now, TVnGO's technology has been widely adopted and forms the backbone of what we now call the "Smart TV" marketplace. LG is one of many companies that has since incorporated TVnGO's technologies across its Smart TV product line.

25. In or around 2007, LG introduced its first TV capable of accessing the Internet, but it suffered from many of the same shortcomings as previous attempts by others. In 2011, LG introduced its first "Smart TV" including additional interactive television features that allowed consumers to receive material from the Internet while watching traditional TV programming.

B. <u>The Asserted Patents</u>[2]

1. The '220 Patent Invention

26. The '220 patent is titled "Method and apparatus for facilitating toggling between internet and TV broadcasts" and is directed to:

> [a] TV-Internet Integration Box allows display of first data broadcast over a TV subscriber channel simultaneously together with second data broadcast over a digital data communications network has respective first and second inputs for receiving at a user premises the first data and the second data according to a user-profile associated with the second data. A combiner unit combines the first data and second data to form a combined video signal; and a video output coupled to the combiner unit conveys the combined video signal to a TV set in a user premises for displaying a first image corresponding to the first data and having superimposed thereon a second image corresponding to the second data. A user at the user premises may interact with the second image for redirecting to the digital data communications network and displaying a program broadcast thereby in at least a portion of the TV set."

'220 patent at Abstract.

2. The '945 Patent Invention

27. The '945 patent is titled "Integrating, at user's premises, TV channel format material with IP format material through overlays" and is directed to "[a] method for displaying a TV broadcast signal and Internet signal on a TV. Preferably, a Web link image is displayed on the TV, which a user can select to display IP content." '945 patent at Abstract.

[2] The specifications and drawings of the Asserted Patents are the same, except for the abstracts, the cross-reference paragraphs, and certain typographical differences. Accordingly, the text of any citation to the specification occurs in all patents, though at different column and line numbers.

3. The ’339 Patent Invention

28. The ’339 patent is titled “TV-Internet integration circuit” and is directed to “[a] TV system for displaying TV broadcast signal and Internet signal. Preferably, the TV system is configured to simultaneously or selectively display the TV broadcast signal and Internet signal.” ’339 patent at Abstract.

4. The ’969 Patent Invention

29. The ’969 patent is titled “Forming overlays at user’s premises and utilizing them for selective combinations of TV broadcast channel format material and IP-format material” and is directed to “[a] method of displaying an Internet signal on a TV. Preferably, at least a portion of the Internet signal is selectively displayed by a remote activation control signal.” ’969 patent at Abstract.

5. The ’621 Patent Invention

30. The ’621 patent is titled “Method of displaying internet signal on TV” and has the same abstract as the ’220 patent. ’621 patent at Abstract.

C. <u>Term 1: “overlay activation criterion”</u>

TVnGO’s Proposal	**LG’s Proposal**
TVnGO contends that this term should be given its **plain and ordinary meaning and that construction is not necessary.** However, if the Court determines that construction is needed, TVnGO offers the following proposed construction: **“a condition for generating an overlay”** These constructions are proposed based on TVnGO’s current understanding of what LG may contend is unclear. If LG contends other language is unclear, TVnGO reserves the right to amend its constructions and present	**Indefinite Under (pre- AIA) 35 U.S.C. § 112 ¶2** The specifications and file histories of the Asserted Patents fail to inform, with reasonable certainty, those skilled in the art of the scope of the claim. The term “overlay activation criterion” is not used or defined in the specifications, and otherwise has no plain and ordinary meaning to those skilled in the art. To the extent “overlay activation criterion” is intended to refer to a criterion for displaying

evidence to address LG's positions.	overlays, or some other form of criterion, the term is ambiguous. To the extent the term unintentionally omits language, TVnGO has not filed a Request for Certificate of Correction or a Reissue Application with the United Stated Patent and Trademark Office to address such omission.

31. The term "overlay activation criterion" is used in claims 1, 9, 10, 13, 17, 20 of the '220 patent; claims 1, 9, 10, 13, 17, 20 of the '969 patent; and claims 1, 4-7, 14, 15, 18 of the '339 patent.

32. A POSA would understand the plain and ordinary meaning of overlay activation criterion to be "a condition for generating an overlay." The term has a plain and ordinary meaning and clearly informs a POSA of the scope of the claim.

33. The claims themselves and the specification support this construction. For example, the independent claims of the '220 patent claim a method (claim 1) and TV-Internet Integration Box (claim 13) "for **generating at a user's premises an overlay**." *See* '220 patent at claims 1 and 13; *see also* '969 patent at claims 1 and 13. The claims of the '220, '339, and '969 patents further describe that an overlay is generated upon meeting an "overlay activation criterion." *See, e.g.*, '220 and '969 patents at claim 1 ("**generating** at the user's premises a corresponding **overlay only if said activation criterion is met**"); '220 and '969 patents at claim 13 ("responsive to an **overlay activation criterion being met for generating a corresponding overlay**"); '339 patent at claims 1 and 13 ("respond to an overlay activation criterion to cause the display screen to display the overlays").

34. The specification describes what an overlay is and describes various events and conditions (i.e., criteria) that trigger generating and displaying the overlays on a TV screen. For example, "**[u]pon detecting a matching event**, corresponding to received IP content that is of

interest to the subscriber, the TV-Internet Integration Box 16 **overlays** the matched IP content with the current broadcast and displays the new integrated video on the subscriber's TV set 17." *See, e.g.*, '220 patent at 4:19-49 (e.g., "the subscriber selects what kind of IP content he wishes to receive and in respect of which program details, such as icons and/or textual data, are to be displayed together with the TV broadcast data."); '969 patent at 4:27-57; '339 patent at 4:23-53. Figure 3 depicts this process, specifically illustrating the query "do **conditions** match?" to which a "yes" response triggers the invention to "**overlay** the data." *See, e.g.*, '220, '969, and '339 patents at Figure 3. These examples describe an overlay activation criterion as would be understood by a POSA.

35. The specification further elaborates on the monitoring and matching of events that lead to generating an overlay in accordance with Figure 3 and described above. In particular:

> an IP content provider interfaces with the web server for creating IP content and associating therewith calendar and program data indicating dates, times and channels in respect of which the IP content is to be streamed to the customer premises. Once this is done, the web server 14 monitors events, which are triggered in known manner causing the web server 14 to extract from the database 19 pre-stored IP content for streaming over the Internet 15 to the TV-Internet Integration Box 16, where it is processed as described…

See, e.g., '220 patent at 4:9-18; '969 patent at 4:17-26; '339 patent at 4:13-22.

36. The specification also notes that "[t]he second data containing display information for the icons also contains data that informs the TV-Internet Integration Box 16 on which channel or channels the associated IP content is to be streamed and at what times. The second data also specifies the web site where the IP content is located." *See, e.g.*, '220 patent at 7:51-55; '969 patent at 7:62-66; '339 patent at 7:52-56.

37. Dependent claims 9 and 20 of the '220 and '969 patents further indicate that the overlay activation criterion can include at least "a timing information, data specifying one or

more TV subscriber channels, a user command information." *See, e.g.,* '220 and '969 patents at claims 9 and 20.

38. Accordingly, an overlay activation criterion is simply a condition under which an overlay is activated for display, or "a condition for generating an overlay."

D. <u>Term 2: "overlay-enabling digital data"</u>

TVnGO's Proposal	LGE's Proposal
TVnGO contends that this term should be given its **plain and ordinary meaning and that construction is not necessary.** The claim defines "overlay-enabling data" as including at least "a Web link indicating a website where content that is associated with said overlay-enabling digital data is stored, an image indicative of the content associated with said overlay-enabling digital data, and an overlay activation criterion." LG has not indicated that it does not understand any of these terms, with the exception of "overlay activation criterion" a construction for which is proposed as indicated above.	"digital data received at the user's premises from the Internet to enable overlaying of an image icon over a TV broadcast program"

39. The term "overlay-enabling digital data" is used in claims 1, 2, 5, 6, 10, 13, 14, 17 of the '220 patent; and claims 1, 2, 5, 6, 10, 13, 14, 17 of the '969 patent.

40. A POSA would understand this term to be defined by the context in which the term is used by the claims themselves. For example, the preamble of claim 1 discloses: "A method for generating at a user's premises an overlay using video signals constituting a first data and overlay-enabling digital data constituting a second data…" *See, e.g.,* '220 and '969 patents at claim 1. The claims themselves inform a POSA of what the overlay-enabling digital data includes, namely, claim 1 continues that the overlay-enabling digital data includes at least:

- a Web link indicating a website where content that is associated with said overlay-enabling digital data is stored,
- an image indicative of the content associated with said overlay-enabling digital data, and
- an overlay activation criterion.

See '220 and '969 patents at claims 1 and 13.

41. The claims themselves recite precisely what is meant by the term overlay-enabling digital data, and this would be readily understood by a POSA.

42. The "overlay-enabling digital data constituting a second data" ('220 and '969 patents at claims 1 and 13) is also described in the specification. For instance, the specification recites that IP packet data constitutes the second data, and is streamed from a web server. *See, e.g.*, '220 patent at 3:34-36; '969 patent at 3:42-44. The invention includes "a second input 22 for receiving respective second data corresponding to IP packet data." *See, e.g.*, '220 patent at 6:42-46; '969 patent at 6:50-54.

43. The specification describes with specificity the meaning of the term. For instance, the specification also notes that the "second data [i.e., the overlay-enabling digital data] containing display information for the icons also contains data that informs the TV-Internet Integration Box 16 on which channel or channels the associated IP content is to be streamed and at what times. The second data also specifies the web site where the IP content is located." *See, e.g.*, '220 Patent at 7:51-55; '969 patent at 7:62-66. The specification further provides an illustrative example of such information in Table 1 ('220 Patent at 7:57-64; '969 patent at 8:1-8) and explains that:

> the second data depicted in Table 1 above shows that the icon image is contained in a file called ICON.GIF and that the IP content relating thereto is to be streamed

> on channels 2 and 23 at times 19:30 and 21:30, these being the start times. The end times are determined by the duration of the IP content to be streamed, which is downloaded from a web site whose name is shown in the table and is contained in the second data.

See, e.g., '220 patent at 7:65-8:4; '969 patent at 8:8-14.

44. Accordingly, the meaning of overlay-enabling digital data, or second data, would be clearly understood by a POSA.

E. <u>Term 3a: "Internet data source"/ Term 3b: "Internet data input"</u>

TVnGO's Proposal	LGE's Proposal
TVnGO contends that this term should be given its **plain and ordinary meaning and that construction is not necessary.** However, if the Court determines that construction is needed, TVnGO offers the following proposed construction: **"input that receives IP data"**	"data source connected to an electronic communications network connecting computer networks around the world"

45. The term "Internet data source" is used in claims 1 and 13 of the '220 patent; and the term "Internet data input" is used in claims 1 and 13 of the '969 patent.

46. A POSA would understand the plain and ordinary meaning of Internet data source and Internet data input to be the "input that receives IP data."

47. Claims 1 and 13 of the '220 Patent elaborate that the combiner unit is connected to an "Internet data source providing overlay-enabling digital data over the Internet."

48. Claims 1 and 13 of the '969 Patent similarly state that the combiner circuit is connected to an "Internet data input providing overlay-enabling digital data over the Internet."

49. The claim language details that the Internet data source or Internet data input is coupled to the combiner unit or combiner circuit to receive the IP data.

50. This is also explained in the specification, which notes that an "Internet broadcast signal comprising IP packet data (constituting second data) is streamed from a web server 14 via the Internet 15 (constituting a digital data communications network) to a TV-Internet Integration Box 16 for display on a TV set 17 coupled thereto." *See, e.g.*, '220 Patent at 3:34-39; '969 patent at 3:42-47. The specification further explains how the IP data is streamed to the TV-Internet Integration Box: "the TV-Internet Integration Box 16 comprises a first input 21 for receiving first data corresponding to a TV broadcast signal, typically being a cable TV signal and **a second input 22 for receiving respective second data corresponding to IP packet data.**" *See, e.g.*, '220 patent at 6:41-46; '969 patent at 6:49-54. The input is also depicted in Figure 5. *See, e.g.*, '220 and '969 patents at Fig. 5.

F. <u>Term 4: "over the Internet"</u>

TVnGO's Proposal	LGE's Proposal
TVnGO contends that this term should be given its **plain and ordinary meaning and that construction is not necessary.** However, if the Court determines that construction is needed, TVnGO offers the following proposed construction: **"via the Internet"**	"over an electronic communications network connecting computer networks around the world"

51. The term "over the Internet" is used in claims 1, 4, and 13 of the '220 and '969 patents.

52. A POSA would understand the plain and ordinary meaning of "over the Internet" to be "via the Internet."

53. This term is used as described above in claims 1 and 13 of the '220 and '969 patents. Specifically, the invention receives "overlay-enabling digital data over the Internet." *See* '220 and '969 patents at claims 1 and 13.

54. The phrase is also used in claim 4 of the ’220 and ’969 patents, which describes embodiments “wherein the content stored at said website enables streaming of digital data over the Internet.” *See, e.g.*, ’220 and ’969 Patents at claim 4.

55. The term “Internet” itself is readily understood by a POSA.

56. The specification provides additional information regarding the Internet: “[a]n Internet broadcast signal comprising IP packet data (constituting second data) is streamed from a web server 14 via the Internet 15 (constituting a digital data communications network) to a TV-Internet Integration Box 16 for display on a TV set 17 coupled thereto.” *See, e.g.*, ’220 Patent at 3:34-39; ’969 patent at 3:42-47.

G. Term 5a: “overlay activation signal”

TVnGO’s Proposal	LGE’s Proposal
TVnGO contends that this term should be given its **plain and ordinary meaning and that construction is not necessary.** However, if the Court determines that construction is needed, TVnGO offers the following proposed construction: **“a signal for generating an overlay”**	**Indefinite Under (pre-AIA) 35 U.S.C. § 112 ¶2** The specifications and file histories of the Asserted Patents fail to inform, with reasonable certainty, those skilled in the art of the scope of the claim. The phrases “overlay activation signal” and “special overlay activation signal” are not used or defined in the specifications, and otherwise has no plain and ordinary meaning to those skilled in the art. To the extent “overlay activation signal” and “special overlay activation signal” are intended to refer to a signal for displaying overlays, or some other signal, the term is ambiguous. To the extent the phrases unintentionally omits language, TVnGO has not filed a Request for Certificate of Correction or a Reissue Application with the United Stated Patent and Trademark Office to address such

	omission.

57. The term "overlay activation signal" is used in claims 1, 4, 8, 9, 12, 15, 19, 21 of the '945 patent; claims 1, 12-15 of the '339 patent; claims 1, 4, 9, 11 of the '621 patent.

58. A POSA would understand the plain and ordinary meaning of overlay activation signal to be "a signal for generating an overlay." The term has a plain and ordinary meaning and clearly informs a POSA of the scope of the claim.

59. This construction is clear from the specification and claims. For example, claims 1 and 12 of the '945 patent recite a TV-Internet Integration circuit (claim 1) or process (claim 12) "configured to combine, at a user's premises, TV channel video with Internet Protocol (IP) material **selected by the user through overlays displayed at the user's premises in response to an overlay activation signal** that the user has selected." *See, e.g.*, '945 patent at claims 1 and 12; '621 patent at claim 1 ("responding to an overlay activation signal by reading out the one or more overlays from the memory and generating display drive signals that cause the TV screen to display the one or more overlays.").

60. The claims of the '339 patent also provide support for TVnGO's construction. Claim 1, for instance, explains that the combiner circuit is configured to "respond to an overlay activation signal selected by the user at the user's premises and identifying one of the displayed overlays to cause the screen to display IP format material from the IP source associated with the identified overlay." *See, e.g.*, '339 Patent at claims 1 and 15.

61. Claims 12 and 13 of the ’339 Patent also elaborate on the generation of an overlay activation signal noting that this can be by “a remote control unit…configured to respond to user action to generate the overlay activation signal.” *See, e.g.*, 339 Patent at claims 12 and 13.

62. Therefore, the overlay activation signal allows for selection of IP material through displayed overlays.

63. The specification elaborates on this aspect of the invention in great detail. For instance, the specification describes an example of an overlay activation signal:

> **The subscriber can respond to the overlaid data using a remote control unit**, described below with reference to FIG. 6 of the drawings, which is programmed to interact with the displayed icon or other data that is overlaid on the TV broadcast…**If the subscriber responds to the overlaid data by pressing a button on the remote control unit, the TV-Internet Integration Box 16 receives the signal from the remote control unit** and changes the priorities for use with the Picture-in-Picture (PIP) technique to display the TV broadcast in a reduced window and to show the other media, i.e., the IP content, in an enlarged window.

See, e.g., ’945 patent at 4:58-5:7; 7:16-27; Fig. 6; ’339 patent at 4:54-5:3; 7:11-21; Fig. 6; ’621 patent at 4:65-5:14; 7:25-35; Fig. 6.

64. The specification describes another example involving a remote control unit for generating an overlay activation signal:

> the keys may be color coded in correspondence with pre-arranged colors of commonly displayed icons, so that **pressing on a specific key activates the displayed icon** of the same color. Alternatively, at least some of the keys may be covered with transfers depicting commonly displayed icons, whereupon the appropriate keys or button for activating each icon are easily recognized.

See, e.g., ’945 patent at 7:28-34; ’339 patent at 7:21-27; ’621 patent at 7:36-42.

H. <u>Term 5b: “special overlay activation signal”</u>

TVnGO’s Proposal	LGE’s Proposal
TVnGO contends that this term should be given its **plain and ordinary meaning and that construction is not necessary.**	**Indefinite Under (pre-AIA) 35 U.S.C. § 112 ¶2**

However, if the Court determines that construction is needed, TVnGO offers the following proposed construction: **"a specific signal for generating an overlay"** as further defined in the claims	The specifications and file histories of the Asserted Patents fail to inform, with reasonable certainty, those skilled in the art of the scope of the claim. The phrases "overlay activation signal" and "special overlay activation signal" are not used or defined in the specifications, and otherwise has no plain and ordinary meaning to those skilled in the art. To the extent "overlay activation signal" and "special overlay activation signal" are intended to refer to a signal for displaying overlays, or some other signal, the term is ambiguous. To the extent the phrases unintentionally omits language, TVnGO has not filed a Request for Certificate of Correction or a Reissue Application with the United Stated Patent and Trademark Office to address such omission.

65. The term "special overlay activation signal" is used in claims 9 and 19 of the '945 Patent; and claim 9 of the '621 patent.

66. Further to Term 5a, POSA would understand the plain and ordinary meaning of special overlay activation signal to be "a specific signal for generating an overlay" as further defined in the claims. The term has a plain and ordinary meaning and clearly informs a POSA of the scope of the claim.

67. In particular, claims 9 and 19 of the '945 patent recite that the TV screen displays, "at least one of the overlays in response to a **special overlay activation signal from an external source timed relative to an event in the TV channel video displayed on the screen**." *See, e.g.*, '945 patent at claims 9 and 19; '621 patent at claim 9. Thus, the claims themselves identify the contours of what makes the overlay activation signal "special," i.e., it is a "specific" signal as recited in the claims.

I. Term 6: "combiner unit"

TVnGO's Proposal	LGE's Proposal
TVnGO contends that this term should be given its **plain and ordinary meaning and that construction is not necessary.** However, if the Court determines that construction is needed, TVnGO offers the following proposed construction: **"a circuit for combining two inputs into one output"** TVnGO contends that this term is not governed by 35 U.S.C. §112(6). However, if the Court determines that the term is governed by 35 U.S.C. §112(6), TVnGO offers the following proposed construction: Function: "combining" Structure: "the combiner unit circuitry in Fig. 5" or "A combiner unit combines the first data and second data to form a Combined Video Signal" or "A combiner unit 23 is coupled to the first and second inputs for combining the first data and the second data to form a combined video signal" or "the combiner unit 23 is shown coupled to a processing unit 25 although in practice it may be implemented in software by the processing unit 25" and equivalents thereof	**Governed by (pre-AIA) 35 U.S.C. § 112 ¶6** Vague and Indefinite / cannot be construed Function: • "to retrieve said content," "generate a second display screen . . . ," and "input the second display screen to said TV set." (claim 1); • "in response to an overlay activation criterion being met for generating a corresponding overlay," "generating at the user's premises a first display screen . . . ," and "associating the Web link with said second portion of the first display screen . . . ." (claim 13) • "periodically access a web server . . .," "extract from the overlay-enabling digital data said one or more second images . . ., "retrieve and store digital content from said web sites," "display the respective image from amongst the second images," "access the respective web site . . .," and "extract and buffer content from the website." (claim 17) Structure: This specification fails to disclose sufficient structure for performing the recited functions of the "means-plus-function" element. At most, the specification discloses a box 23 labeled "Combiner Unit" (FIG. 5) with its external connections, but discloses no internal structures to perform the above recited functions. **Thus, this "means-plus-function" element is indefinite Under (pre-AIA) 35 U.S.C. § 112 ¶2.**

68. The term "combiner unit" is used in claims 1, 13, and 17 of the '220 patent.

69. A POSA would understand the plain and ordinary meaning of combiner unit to be "a circuit for combining two inputs into one output." The term has a plain and ordinary meaning and clearly informs a POSA of the scope of the claim. A POSA would understand the terms "combiner unit" (Term 6) and "combiner circuit" (Term 7) to mean the same thing.

70. The claims provide detailed structural components of the combiner. For instance, claim 1 of the '220 patent recites that the "combiner unit is coupled to a TV set and connected to a separate TV tuner box or TV tuner in the TV set at the user's premises, and the combiner unit is also connected through distinct networks to each of a video signal source providing video signals through the TV tuner box or TV tuner in the TV set, and an Internet data source providing overlay-enabling digital data over the Internet." The various connections to the combiner unit have clear structure. Accordingly, the combiner unit recites a particular structure in order to perform the objectives of the claim language in light of its components.

71. This meaning is also clear from the specification. For instance, the specification sets forth that a "combiner unit combines the first data and second data to form a combined video signal; and a video output coupled to the combiner unit conveys the combined video signal to a TV set in a user premises…" *See, e.g.,* '220 patent at Abstract.

72. The specification also states that a "combiner unit 23 is coupled to the first and second inputs for combining the first data and the second data to form a combined video signal. A video output 24 is coupled to the combiner unit 23 for conveying the combined video signal to a TV set in a user premises." *See, e.g.,* '220 patent at 6:49-59.

73. Additionally, Figure 5 depicts the inputs and output associated with the combiner unit, specifically showing "first input 21" and "second input 22" with "video output 24." *See* '220 patent at Figure 5. As described in the specification, "first input 21 [is] for receiving first

data corresponding to a TV broadcast signal, typically being a cable TV signal" and "second input 22 [is] for receiving respective second data corresponding to IP packet data." *See, e.g.*, '220 patent at 6:40-49. Figure 5 and the specification provide additional details regarding the structural components of the combiner unit. *See, e.g.*, '220 patent at 6:60-7:6.

74. The '220 patent describes combining broadcast TV signals with IP data. *See, e.g.*,'220 patent at 3:31-48; 6:40-62. As described above and throughout the specification, these data are provided as inputs to the combiner unit, which combines the input data and outputs a video signal for display. *See, e.g.*, '220 patent at Abstract, 2:20-62; 3:31-48; 6:49-53.

75. A POSA would understand that such data can be transmitted in the form of an electronic/electrical signal in order to be provided as inputs to the combiner unit. As the data is provided in the form of an electronic/electrical signal to the combiner unit, a POSA would understand that a circuit is used to combine the two data signals for output to a video display.

76. The combiner unit receives data at its inputs in the form of electrical signals. In order to combine these two input signals to provide the output signal, the combiner unit needs to contain structure capable of receiving and processing these two input signals and output the signal to the TV display. A POSA would understand that there were numerous commercially available circuits capable of performing this processing.

77. A POSA would be able to determine the structure of a circuit capable of combining two inputs into an output. Based on the inputs, outputs, and objectives recited in the claims and specification, a POSA would understand the structural arrangement of the claimed combiner unit to be a circuit. A POSA would understand what potential electronic components could perform the combining operation of the combiner unit.

78. The term "combiner" on its own has also been readily understood in the art as structural. This is also confirmed by LG's expert, Mr. Leo Hoarty's own patent, U.S. Patent No. 6,205,582 ("the Hoarty patent"), which issued on March 20, 2001. The Hoarty patent recites that "all signals going to a particular service area are **combined** via switcher-**combiner** 304." *See* Ex. 7, TVNGO_0002364–2394 at TVNGO_0002389, 5:31-32 (emphasis added). The Hoarty Patent also describes "[t]he outputs of the low pass filter 406 and the impairment removal circuit 417 are **re-combined at combiner** 407…" *See* Ex. 7 at TVNGO_0002391, 8:67-9:2 (emphasis added). Figure 6 also shows several combiners 304 and 307. *See* Ex. 7 at TVNGO_0002390. The Hoarty Patent does not provide additional information regarding the combiners further confirming my opinion that a POSA would readily understand that a "combiner" is a well-known structure. The term combiner is understood in the art to refer to electronics/electrical devices used for combining inputs, such as signals.

J. Term 7: "combiner circuit"

TVnGO's Proposal	LGE's Proposal
TVnGO contends that this term should be given its **plain and ordinary meaning and that construction is not necessary.** However, if the Court determines that construction is needed, TVnGO offers the following proposed construction: **"a circuit for combining two inputs into one output"** TVnGO contends that this term is not governed by 35 U.S.C. §112(6). However, if the Court determines that the term is governed by 35 U.S.C. §112(6), TVnGO offers the following proposed construction:	**Governed by (pre-AIA) 35 U.S.C. § 112 ¶6** Vague and Indefinite / cannot be construed Function: • "to selectively generate display drive signals . . ., and, further, to selectively process . . .," "to respond to the processing of the overlay activation signal by obtaining . . . and generating . . .," and "to respond to a user selection . . . to generate display drive signals . . . ." ('945 Patent claim 1); • "generate display drive signals . . ." ('945 Patent claim 2); • "generate display drive signals . . ." ('945 Patent claim 3); • "generate the overlay activation signal . .

Function: "combining" Structure: "the combiner unit circuitry in Fig. 5" or "A combiner unit 23 is coupled to the first and second inputs for combining the first data and the second data to form a combined video signal" or "the combiner unit 23 is shown coupled to a processing unit 25 although in practice it may be implemented in software by the processing unit 25" or "combiner circuit at the user's premises having a first input for receiving the TV channel video, a second input for receiving the IP material, and an output for outputting display drive signals to the TV screen" (e.g., '945 claim 1) or "combiner circuit at the user's premises having a first input for receiving the TV channel video and a second input for receiving the IP material, and further having an output for outputting the combined video" (e.g., '339 claim 1) or "combiner circuit comprises a memory circuit" (e.g., '339 claim 1) or "combiner circuit comprises an IR receiver and an IR decoder" (e.g., '339 claim 13) or "combiner circuit comprises a programmed processing unit" (e.g., '339 claim 14) and equivalents thereof	." ('945 Patent claim 4); • "pre-fetch overlays and store them in the memory circuit . . ." ('945 Patent claim 5); • "pre-fetch IP material and store the pre-fetched material in the memory circuit . . ." ('945 Patent claim 6); • "selectively process at the user's premises an overlay activation signal . . ." ('945 Patent claim 8); • "cause the screen to display at least one of the overlays in response to a special overlay activation signal . . ." ('945 Patent claim 9); and • "cause the screen to display overlays that point to sources of IP material but not to specific IP material" ('945 Patent claim 10). • "to retrieve said content," "generate a second display screen . . . ," and "input the second display screen to said TV set." ('945 Patent claim 12). • "respond to an overlay activation criterion to cause the display screen to display . . .," and "respond to an overlay activation signal . . . to cause the screen to display . . . ." ('339 Patent claim 1). • "store overlays . . . without also storing . . ." ('339 Patent claim 2); • "store overlays . . . by specifying a web site . . ." ('339 Patent claim 3); • "generate the overlay activation criterion . . ." ('339 Patent claim 4); • "generate the overlay activation criterion . . . by matching . . ." ('339 Patent claim 5); • "respond to the overlay activation criterion by causing the screen to display . . ." ('339 Patent claim 6); • "respond to the overlay activation criterion by causing the screen to display . . ." ('339 Patent claim 7); • "receive at least some of the overlays . . . and store them . . ." ('339 Patent claim 8);

	• "receives the TV channel video . . ." ('339 Patent claim 9); • "receives the TV channel video . . . receives the IP material . . ." ('339 Patent claim 10); and • "cause the screen to display an overlay . . ." ('339 Patent claim 11); • "respond to an overlay activation criterion to cause the display screen to display . . .," and "respond to an overlay activation signal . . . to cause the screen to display . . . ." ('339 Patent claim 15); • "to retrieve said content," "generate a second display screen . . . ," and "input the second display screen to said TV set." ('969 Patent claim 1); • "responsive to an overlay activation criterion being met for generating a corresponding overlay," "generating at the user's premises a first display screen . . . ," and "associating the Web link with said second portion of the first display screen . . . ." ('969 Patent claim 13). Structure: This specification fails to disclose sufficient structure for performing the recited functions of the "means-plus-function" element. At most, the specification discloses a box 23 labeled "Combiner Unit" (FIG. 5) with its external connections, but discloses no internal structures to perform the above recited functions. **Thus, this "means-plus-function" element is indefinite Under (pre-AIA) 35 U.S.C. § 112 ¶2.**

79. The term "combiner circuit" is used in claims 1-10, 12, and 18 of the '945 patent; claims 1-17, 19, and 20 of the '339 patent; and claims 1, 13, and 17 of the '969 patent.

80. A POSA would understand the plain and ordinary meaning of combiner circuit to be "a circuit for combining two inputs into one output." The term has a plain and ordinary meaning and clearly informs a POSA of the scope of the claim.

81. As explained above for Term 6, based on the inputs, outputs, and objectives recited in the claims and specification, a POSA would understand what potential electronic components could perform the combining operation of the combiner circuit.

82. A POSA would understand the term combiner circuit as used in the claims of the '945, '339, and '969 patents to be the same as the combiner unit described in the specifications of all the Asserted Patents. The use of the term "unit" in the specification and "circuit" in the claims would be readily understood to be interchangeable by a POSA. It is clear that the combiner unit of the specification is a circuit, and thus clear that the "combiner unit" of the specifications is the same as the "combiner circuit" described in the claims.

83. This is confirmed by the prosecution history as well. During prosecution of the '969 patent, the Examiner objected to use of the term combiner unit, and proposed that the claims should be amended to recite "combiner circuit" as recited elsewhere in the claims. *See* Ex. 8, 4/16/2015 Office Action for U.S. Appl. No. 13/336,189. The examiner did not raise any substantive rejections regarding this change in terminology. I understand that an Examiner at the PTO is considered a POSA, and thus this further confirms my opinion that a POSA would understand that "combiner unit" and "combiner circuit" are interchangeable and mean the same thing.

84. As described above with respect to combiner unit, the specification clearly sets forth the inputs, outputs, and objectives of the combiner circuit. *See, e.g.*,'945 patent at 2:27-3:3; 3:39-56; 6:48-7:3; '339 patent at 2:25-67; 3:35-52; 6:44-66; '969 patent at 2:28-3:3; 3:39-56;

6:48-7:3. The first and second data are provided as inputs to the combiner circuit, which combines the input data and outputs a video signal for display. *See, e.g.*,'945 patent at 2:27-3:3; 3:39-56; 6:48-7:3; '339 patent at 2:25-67; 3:35-52; 6:44-66; '969 patent at 2:28-3:3; 3:39-56; 6:48-7:3. In order to combine these data as provided in the claim language, a POSA would understand that this operation is carried out by a circuit which combines the two inputs to produce one output.

85. Additionally, the claims themselves provide sufficient structure for the combiner circuit, as understood by a POSA, specifically noting the "combiner circuit at the user's premises having a first input for receiving the TV channel video, a second input for receiving the IP material, and an output for outputting display drive signals to the TV screen." *See, e.g.*, '945 patent at claims 1 and 12.

86. Similarly, the claims of the '339 patent also connote sufficient structure for the combiner circuit as some claims further describe the structure. *See, e.g.*, '339 patent at claim 1 ("combiner circuit at the user's premises having a first input for receiving the TV channel video and a second input for receiving the IP material, and further having an output for outputting the combined video"); claim 1 ("combiner circuit comprises a memory circuit"); claim 13 ("combiner circuit comprises an IR receiver and an IR decoder"); and claim 14 ("combiner circuit comprises a programmed processing unit").

87. As with combiner unit, a POSA would readily understand that a combiner circuit as used in the patents connotes a particular structure.

88. I also understand from counsel that courts, specifically the Federal Circuit, have relied on certain technical dictionaries to determine the structure of the term "circuit," including The Dictionary of Computing 75 (4th ed. 1996), which defines "circuit" as "the combination of a

number of electrical devices and conductors that, when interconnected to form a conducting path, fulfill some desired function." I agree with this definition and it is consistent with and supports my opinion.

K. Term 8: "selectively process[ing] at the user's premises [an overlay activation signal]"

TVnGO's Proposal	LGE's Proposal
TVnGO contends that this term should be given its **plain and ordinary meaning and that construction is not necessary.** However, if the Court determines that construction is needed, TVnGO offers the following proposed construction: **"process[ing] at the user's premises a specific signal for generating an overlay"**	**Indefinite Under (pre-AIA) 35 U.S.C. § 112 ¶2** The specifications and file histories of the Asserted Patents fail to inform, with reasonable certainty, those skilled in the art of the scope of the claim. The term "overlay activation signal" is indefinite as noted above. The term "selectively process[ing] at the user's premises [an overlay activation signal]" is not used or defined in the specifications, and otherwise has no plain and ordinary meaning to those skilled in the art. To the extent "selectively process[ing] at the user's premises [an overlay activation signal]" is intended to refer to processing an overlay activation signal/criterion based on some undefined criteria, the term is ambiguous. To the extent the term unintentionally omits language, TVnGO has not filed a Request for Certificate of Correction or a Reissue Application with the United Stated Patent and Trademark Office to address such omission.

89. The term "selectively process[ing] at the user's premises [an overlay activation signal]" is used in claims 1, 8, 12, 21 of the '945 patent; and claim 11 of the '621 Patent.

90. A POSA would understand the plain and ordinary meaning of "selectively process[ing] at the user's premises [an overlay activation signal]" to be "process[ing] at the

user's premises a specific signal for generating an overlay." The term has a plain and ordinary meaning and clearly informs a POSA of the scope of the claim.

91. As explained above for Term 5a, the term "overlay activation signal" would be readily understood by a POSA.

92. Claim 1 of the '945 patent recites that the invention includes a "combiner circuit being configured to selectively generate display drive signals causing the TV screen to display the TV channel video received at the first input and, further, to **selectively process at the user's premises an overlay activation signal**." *See, e.g.*, '945 patent at claim 1. Claim 1 goes on to describe that "said combiner circuit being further configured to respond to the processing of the overlay activation signal by obtaining the overlays from the memory circuit and generating display drive signals causing the TV screen to display the overlays." *See, e.g.*, '945 patent at claim 1.

93. Dependent claims 8 and 21 provide that in at least some embodiments, the selective processing of the overlay activation signal is "per input from the user." *See, e.g.*, '945 patent at claims 8 and 21; '621 patent at claim 11.

94. The specification further elaborates on selective processing performed by the combiner circuit. For example:

> [i]n accordance with one embodiment of the invention, **the subscriber selects what kind of IP content he wishes to receive and in respect of which program details, such as icons and/or textual data, are to be displayed together with the TV broadcast data.** For example, a subscriber may wish to block certain types of program material or may wish to receives details thereof only during limited hours, for example when the children are asleep. To this end, the subscriber is able to program the TV-Internet Integration Box 16 in much the same way that a video cassette recorder is programmed so as to store in the memory 25 a timetable indicating what type of IP data is to be displayed and when. **The timetable is updated as and when required by the subscriber. The TV-Internet Integration Box 16 is adapted to check the timetable periodically** and to filter out incoming IP content that is either of a type that is not required or

> that is broadcast during an unauthorized time window. By such means, an additional layer of authorization may be provided to that stored in the database 19 for access by the web server 14, thus allowing pre-fetching of IP content and storage in the memory 25 of the TV-Internet Integration Box 16. **Upon detecting a matching event, corresponding to received IP content that is of interest to the subscriber, the TV-Internet Integration Box 16 overlays the matched IP content with the current broadcast and displays the new integrated video on the subscriber's TV set 17**.

See, e.g., ’945 patent at 4:27-57 (emphasis added); ’621 patent at 3:34-64. This is also depicted in Figure 3. *See* ’945 and ’621 patents at Fig. 3.

95. The specification also discusses that the:

> combiner unit 23 is shown coupled to a processing unit 25 although in practice it may be implemented in software by the processing unit 25. A memory 26 is coupled to the processing unit 25 for storing program data, such as profiles and program timetables etc. so as to allow the processing unit 25 to filter incoming IP content according to pre-defined profiles and other selection data.

See, e.g., ’945 patent at 7:1-15; ’621 patent at 7:11-24.

96. Accordingly, processing by the combiner circuit can be done by itself or in combination with the processing unit. The overlay activation signal can be provided by the user as described, e.g., per input from the user, allowing the combiner circuit to selectively process the signal based on selected information. Additionally, the “processing unit 25 is also coupled to a user interface 27 that allows the subscriber to program the TV-Internet Integration Box 16 and store the program data in the memory 26.” *See, e.g.*, ’945 patent at 7:1-15; ’621 patent at 7:11-24. “An IR receiver 28 is adapted to receive IR commands from a remote control unit described below with reference to FIG. 6 and is coupled to a decoder 29, which decodes a received IR signal and feeds it to the processing unit 25 for further processing.” *See, e.g.*, ’945 patent at 7:1-15; ’621 patent at 7:11-24.

L. Term 9: "depending on user selection at the user's premises the TV screen displays, at respective times, the TV channel video received at the first input, the overlays, and the IP material that the user has selected through the displayed overlays."

TVnGO's Proposal	LGE's Proposal
TVnGO contends that this term should be given its **plain and ordinary meaning and that construction is not necessary.** However, if the Court determines that construction is needed, TVnGO offers the following proposed construction: **"depending on a selection made by the user at the user's premises, the TV screen displays the TV channel video received at the first input, the overlays, or the IP data associated with an overlay"**	"in response to the user's selection of one of the displayed overlays at the user's premises, the TV screen displays, at different times, the three different screen formats illustrated in FIGs. 7a-7c."

97. The term "depending on user selection at the user's premises the TV screen displays, at respective times, the TV channel video received at the first input, the overlays, and the IP material that the user has selected through the displayed overlays" is used in claims 1 and 12 of the '945 Patent.

98. A POSA would understand the plain and ordinary meaning of "depending on user selection at the user's premises the TV screen displays, at respective times, the TV channel video received at the first input, the overlays, and the IP material that the user has selected through the displayed overlays" to be "depending on a selection made by the user at the user's premises, the TV screen displays the TV channel video received at the first input, the overlays, or the IP data associated with an overlay."

99. Claim 1 of the '945 patent describes various embodiments the TV screen can display, setting forth that the combiner circuit is configured to "generate display drive signals" that "caus[e] the TV screen to display the TV channel video received at the first input," that

"caus[e] the TV screen to display the overlays," and that "caus[e] the TV screen to display the IP material associated with the selected overlay and received at the second input." *See, e.g.*, '945 patent at claim 1. The claim then states that "depending on user selection at the user's premises the TV screen displays, at respective times, the TV channel video received at the first input, the overlays, and the IP material that the user has selected through the displayed overlays." *See, e.g.*, '945 patent at claim 1. Claim 12 provides a process for generating display drive signals that cause the TV screen to display the same embodiments as described claim 1. *See* '945 patent at claim 12.

100. The claim language is clear as to what the TV screen displays pursuant to the user's selection and in accordance with the invention and a POSA would understand the various display options that are possible based on the invention. TVnGO's proposed construction, clarifies the claim language while keeping the appropriate limitations. These claim terms outline just some of the possible TV screen display options of, e.g., claims 1 and 12 of the '945 patent, which include a variety of other examples.

101. Dependent claims 2 and 3 outline two particular embodiments of the invention. Claim 2 describes an embodiment in which the TV screen is caused to "display the overlays over a display of the TV channel video on the TV screen." *See* '945 patent at claim 2. Claim 3 describes an embodiment in which the TV screen is caused to "display the overlays in respective plural windows on the TV screen while the screen is displaying the TV channel video." *See* '945 patent at claim 3. Claims 13 and 14 describe similar embodiments with respect to claim 12. *See* '945 patent at claims 12-14. These claims outline just some of the embodiments of claims 1 and 12.

102. Some of these embodiments are shown in Figures 7a, 7b, and 7c, and described in the specification. *See, e.g.*, '945 patent at Figs. 7a, 7b, 7c, 7:16-61. The specification describes an example in which a remote control unit is used, allowing the user to press certain keys to activate various options. *See, e.g.*, '945 patent at 7:28-31 ("the keys may be color coded in correspondence with pre-arranged colors of commonly displayed icons, so that pressing on a specific key activates the displayed icon of the same color"). The specification describes another example in which the keys of a remote control unit:

> **may also be programmed** so that depressing the same key more than once automatically re-sizes the windows containing the TV broadcast and the Internet broadcast. **For example**, FIG. 7a shows the default situation where a TV screen 40 displays a conventional TV broadcast in a window 41 that is sized to occupy the whole area of the TV screen 40 and will be referred to as the primary window. Also shown are IP icons 42, 43 and 44 each of which points to a different IP content that is streamed from a respective web site of known address. On pressing the key on the remote control unit 30 that corresponds to the icon 42, the IP content corresponding thereto is displayed within a small window 45 (referred to as the secondary window) that is contained within the primary window 41 as shown in FIG. 7d [sic 7b]. The icons 42, 43 and 44 remain visible so that, if desired, the selected program can be changed by pressing a different key on the remote control unit 30. On pressing a key a second time in succession, the IP content is re-sized so that its window 45 occupies substantially the whole area of the screen as shown in FIG. 7c. On pressing the key a third time in succession, the situation reverts to the default shown in FIG. 7a where the primary window 41 containing the TV broadcast occupies the whole area of the TV screen 40. **Thus, each key operates as a three-way toggle that switches between three different display modes.**

'945 patent at 7:35-61, *see* Figs. 7a, 7b, 7c.

103. A POSA would not understand the embodiments shown in Figure 7a, 7b, and 7c to be the only embodiments of the invention encompassed by the claims. A POSA would understand that other embodiments are contemplated by the claims.

M. Term 10: "depending on the user's selection [at the user's premises] the screen image is at respective times the TV channel video with or without overlays thereon and the IP material that the user has selected through the displayed overlays."

TVnGO's Proposal	LGE's Proposal
TVnGO contends that this term should be given its **plain and ordinary meaning and that construction is not necessary.** However, if the Court determines that construction is needed, TVnGO offers the following proposed construction: **"depending on a selection made by the user [at the user's premises], the screen image is the TV channel video with or without overlays or the IP data associated with an overlay"**	"in response to the user's selection of an overlay activation signal [at the user's premises], the TV screen displays, at different times, the three different screen formats illustrated in FIGs. 7a-7c." The term "overlay activation signal" is indefinite as noted above.

104. The term "depending on the user's selection [at the user's premises] the screen image is at respective times the TV channel video with or without overlays thereon and the IP material that the user has selected through the displayed overlays" is used in claims 1 and 15 of the '339 Patent.

105. A POSA would understand the plain and ordinary meaning of "depending on the user's selection [at the user's premises] the screen image is at respective times the TV channel video with or without overlays thereon and the IP material that the user has selected through the displayed overlays" to be "depending on a selection made by the user [at the user's premises], the screen image is the TV channel video with or without overlays or the IP data associated with an overlay."

106. As described above for Term 5a, a POSA would understand the plain and ordinary meaning of the term "overlay activation signal."

107. As explained above for Term 9, a POSA would understand that the claim language is clear as to what the TV screen displays pursuant to the user's selection and in

accordance with the invention and a POSA would understand the various display options that are possible based on the invention. *See, e.g.*, '339 patent at claims 1, 6, 7, and 15. In particular, claims 1 and 15 of the '339 patent describe that the "screen image is at respective times the TV channel video with or without overlays thereon and the IP material that the user has selected through the displayed overlays." *See, e.g.*, '339 patent at claims 1, 6, 7, and 15. TVnGO's proposed construction clarifies the claim language while keeping the appropriate limitations.

108. As also explained above with respect to Term 9, the claims are not limited to the examples shown in Figures 7a, 7b, and 7c, as LG suggests, but rather contemplate other embodiments. A POSA would not understand the embodiments shown in Figures 7a, 7b, and 7c to be the only embodiments of the invention encompassed by the claims. *See, e.g.*, '339 patent at 7:11-51, Figs. 7a, 7b, 7c.

N. Term 11: "depending on the user's selection at the user's premises, the TV screen displays, at respective times, the TV channel video received at the first input, the one or more overlays, and the IP material associated with the selected overlay and received at the second input."

TVnGO's Proposal	LGE's Proposal
TVnGO contends that this term should be given its **plain and ordinary meaning and that construction is not necessary.** However, if the Court determines that construction is needed, TVnGO offers the following proposed construction: **"depending on a selection made by the user at the user's premises, the TV screen displays the TV channel video received at the first input, the one or more overlays, or the IP data associated with an overlay"**	"in response to the user's selection of one of the displayed overlays at the user's premises, the TV screen displays, at different times, the three different screen formats illustrated in FIGs. 7a-7c."

109. The term "depending on the user's selection at the user's premises, the TV screen displays, at respective times, the TV channel video received at the first input, the one or more

overlays, and the IP material associated with the selected overlay and received at the second input" is used in claim 1 of the '621 Patent.

110. A POSA would understand the plain and ordinary meaning of "depending on the user's selection at the user's premises, the TV screen displays, at respective times, the TV channel video received at the first input, the one or more overlays, and the IP material associated with the selected overlay and received at the second input" to be "depending on a selection made by the user at the user's premises, the TV screen displays the TV channel video received at the first input, the one or more overlays, or the IP data associated with an overlay."

111. As explained above for Terms 9 and 10, the claim language is clear as to what the TV screen display options are pursuant to the user's selection and in accordance with the invention, and a POSA would understand the various TV screen display options that are possible based on the invention. *See, e.g.*, '621 patent at claim 1. In particular, claim 1 describes that the "the TV screen displays, at respective times, the TV channel video received at the first input, the one or more overlays, and the IP material associated with the selected overlay and received at the second input." *See, e.g.*, '621 patent at claim 1. TVnGO's proposed construction clarifies the claim language while keeping the appropriate limitations.

112. As also explained above with respect to Terms 9 and 10, the claims are not limited to the examples shown in Figures 7a, 7b, and 7c, as LG suggests, but rather contemplate other embodiments. A POSA would not understand the embodiments shown in Figures 7a, 7b, and 7c to be the only embodiments of the invention encompassed by the claims. *See, e.g.*, '621 patent at 7:25-67, Figs. 7a, 7b, 7c.

O. Term 12: "said overlay-enabling digital data is received at the user premises according to a pre-stored user[-]profile"

TVnGO's Proposal	LGE's Proposal
TVnGO contends that this term should be given its **plain and ordinary meaning and that construction is not necessary.** However, if the Court determines that construction is needed, TVnGO offers the following proposed construction: The overlay-enabling digital data, as defined above in Term 2, **"is received at the user premises based on information associated with an existing user profile"**	"the overlay-enabling digital data provided over the Internet is received at the user's home if it matches an input from the user that is pre-stored in memory"

113. The term "said overlay-enabling digital data is received at the user premises according to a pre-stored user[-]profile" is used in claims 2 and 14 of the '220 and '969 patents.

114. A POSA would understand the plain and ordinary meaning of "said overlay-enabling digital data is received at the user premises according to a pre-stored user[-]profile" to be that the overlay-enabling digital data, as defined above in Term 2, "is received at the user premises based on information associated with an existing user profile."

115. The specification describes that "[t]he IP packet data [i.e., the overlay-enabling digital data] may optionally be **associated with predefined user-profiles that are also stored** in the database 19 so that the advertisement or other IP data is sent only to specific TV-Internet Integration Boxes. Such user-profiles **may be configured by the advertiser or by the user**." *See, e.g.*, '220 patent at 6:6-15; '969 patent at 6:14-23. Various configurations and data that may be contained in a user profile include, e.g., data that refines the target audience, categories of TV programs, geographical data, or language data. *See, e.g.*, '220 patent at 6:25-39; '969 patent at 6:33-47. As a POSA would readily understand, the overlay-enabling digital data is received at

the user's premises based on information associated with such a profile. *See, e.g.*, '220 patent at 6:6-15, 6:46-49; '969 patent at 6:14-23, 6:54-57.

P. Term 13: "pre-fetching and buffering said digital data stream from said website"

TVnGO's Proposal	LGE's Proposal
TVnGO contends that this term should be given its **plain and ordinary meaning and that construction is not necessary.** However, if the Court determines that construction is needed, TVnGO offers the following proposed construction: **"acquiring and temporarily storing the digital data anticipated to be used from the website"**	"before activation of an overlay, downloading and storing in a memory Internet content from the website associated with the overlay"

116. The term "pre-fetching and buffering said digital data stream from said website" is used in claims 4 and 16 of the '220 patent; and claims 4 and 16 of the '969 patent.

117. A POSA would understand the plain and ordinary meaning of "pre-fetching and buffering said digital data stream from said website" to be "acquiring and temporarily storing the digital data anticipated to be used from the website."

118. A POSA would understand "pre-fetching" data to include acquiring data in anticipation of using the data, and would understand "buffering" data to mean temporarily storing the data. The specification is consistent with this understanding of these terms. *See, e.g.*, '220 patent at 8:5-39, Fig. 8; '969 patent at 8:16-51, Fig. 8.

Q. Term 14a: "pre-fetch IP material and store the pre-fetched material in the memory circuit"

TVnGO's Proposal	LGE's Proposal
TVnGO contends that this term should be given its **plain and ordinary meaning and that construction is not necessary.**	"before activation of the selected overlay, download and store in the memory circuit Internet material from a website associated with the selected overlay"

However, if the Court determines that construction is needed, TVnGO offers the following proposed construction: **"acquire IP data anticipated to be used and store the IP data in the memory circuit"**	

119. The term "pre-fetch IP material and store the pre-fetched material in the memory circuit" is used in claims 6 and 17 of the '945 patent.

120. A POSA would understand the plain and ordinary meaning of "pre-fetch IP material and store the pre-fetched material in the memory circuit" to be "acquire IP data anticipated to be used and store the IP data in the memory circuit."

121. A POSA would understand the term "pre-fetch" to include acquiring in anticipation of using. The specification is consistent with this understanding of the terms. *See, e.g.*, '945 patent at 8:16-50, Fig. 8.

R. Term 14b: "pre-fetching IP material and storing the pre-fetched IP material in a memory"

TVnGO's Proposal	LGE's Proposal
TVnGO contends that this term should be given its **plain and ordinary meaning and that construction is not necessary.** However, if the Court determines that construction is needed, TVnGO offers the following proposed construction: **"acquiring IP data anticipated to be used and storing the IP data in a memory"**	"before activation of the selected overlay, downloading and storing in a memory Internet material from a website associated with the selected overlay"

122. The term "pre-fetching IP material and storing the pre-fetched IP material in a memory" is used in claim 6 of the '621 patent.

123. A POSA would understand the plain and ordinary meaning of "pre-fetching IP material and storing the pre-fetched IP material in a memory" to be "acquiring IP data anticipated to be used and storing the IP data in a memory."

124. A POSA would understand the term "pre-fetch" to include acquiring in anticipation of using. The specification is consistent with this understanding of the terms. *See, e.g.*, '621 patent at 8:23-58, Fig. 8.

S. Term 15: "generate the overlay activation signal through testing if specified conditions match contents of the memory circuit."

TVnGO's Proposal	LGE's Proposal
TVnGO contends that this term should be given its **plain and ordinary meaning and that construction is not necessary.** However, if the Court determines that construction is needed, TVnGO offers the following proposed construction: **"generate the signal for generating an overlay by comparing if given conditions are equal to contents of the memory circuit"**	"generate the overlay activation signal if specified conditions provided over the Internet match the user-specified profile stored in the memory circuit" The term "overlay activation signal" is indefinite as noted above.

125. The term "generate the overlay activation signal through testing if specified conditions match contents of the memory circuit" is used in claim 4 of the '945 patent.

126. A POSA would understand the plain and ordinary meaning of "generate the overlay activation signal through testing if specified conditions match contents of the memory circuit" to be "generate the signal for generating an overlay by comparing if given conditions are equal to contents of the memory circuit."

127. As explained above for Term 5a, the term overlay activation signal would be readily understood by a POSA.

128. The claims and specification support and are consistent with this proposed construction. *See, e.g.*, '945 patent at 4:27-57 (e.g., "Upon detecting a matching event, corresponding to received IP content that is of interest to the subscriber, the TV-Internet Integration Box 16 overlays the matched IP content with the current broadcast and displays the new integrated video on the subscriber's TV set 17."); 7:1-15 ("A memory 26 is coupled to the processing unit 25 for storing program data, such as profiles and program timetables etc. so as to allow the processing unit 25 to filter incoming IP content according to pre-defined profiles and other selection data."), Figs. 3, 5, 8.

T. Term 16: "the overlay activation signal is generated as a function of testing if specified conditions at the user's premises match contents of the memory [circuit]"

TVnGO's Proposal	LGE's Proposal
TVnGO contends that this term should be given its **plain and ordinary meaning and that construction is not necessary.** However, if the Court determines that construction is needed, TVnGO offers the following proposed construction: **"the signal for generating an overlay is generated by comparing given conditions at the user's premises with contents of the memory [circuit]"**	"the overlay activation signal is generated if specified conditions provided over the Internet match the user-specified profile stored in the memory circuit at the user's premises" The term "overlay activation signal" is indefinite as noted above.

129. The term "the overlay activation signal is generated as a function of testing if specified conditions at the user's premises match contents of the memory [circuit]" is used in claim 15 of the '945 patent; and claim 4 of the '621 patent.

130. A POSA would understand the plain and ordinary meaning of "the overlay activation signal is generated as a function of testing if specified conditions at the user's premises match contents of the memory [circuit]" to be "the signal for generating an overlay is generated by comparing given conditions at the user's premises with contents of the memory [circuit]."

131. As explained above for Term 5a, the term overlay activation signal would be readily understood by a POSA. As explained above for Term 15, the claims and specification support and are consistent with this proposed construction. *See, e.g.*, '945 patent at 4:27-57, 7:1-15, Figs. 3, 5, 8; '621 patent at 4:34-64, 7:11-24, Figs. 3, 5, 8.

U. Term 17: "periodically access[ing] a web server for downloading said overlay-enabling digital data"

TVnGO's Proposal	LGE's Proposal
TVnGO contends that this term should be given its **plain and ordinary meaning and that construction is not necessary.** However, if the Court determines that construction is needed, TVnGO offers the following proposed construction: **"periodically access[ing] a web server for downloading"** the overlay-enabling digital data, as defined above in Term 2	"accessing and downloading overlay-enabling digital data from a web server at a regular time interval"

132. The term "periodically access[ing] a web server for downloading said overlay-enabling digital data" is used in claims 10 and 17 of the '220 and '969 patents.

133. A POSA would understand the plain and ordinary meaning of "periodically access[ing] a web server for downloading said overlay-enabling digital data" to be "periodically access[ing] a web server for downloading" the overlay-enabling digital data, as defined above in Term 2.

134. The specification describes this "periodic[] access," or random access, without specifically limiting it to "a regular time interval" as proposed by LG. *See, e.g.*, '220 patent at 8:5-13 ("In accordance with one embodiment, the processing unit 25 is programmed to access the web server 14 periodically and download current program data."); '969 patent at 8:16-24. An example is provided wherein "once every 2 to 3 hours the TV-Internet Integration Box 16 may automatically access the web server 14 to download the second data," ('220 patent at 8:5-13)

however the specification also notes that such periodic access occurs in instances such as pre-fetching. *See, e.g.*, '220 patent at 8:25-30 ("FIG. 8 is a flow diagram showing the principal actions carried out by the TV-Internet Integration Box when pre-fetching a digital broadcast signal. Thus, the TV-Internet Integration Box 16 periodically accesses the web server 14 and downloads current program data, constituting the second data"); '969 patent at 8:37-42.

135. The dictionary definition of the term "periodically" is consistent with TVnGO's proposed construction. *See, e.g.*, Ex. 9, LG00007368 (defining "periodically" as "from time to time").

V. Term 18: "matching material stored in the memory with IP material available at the second input"

TVnGO's Proposal	LGE's Proposal
TVnGO contends that this term should be given its **plain and ordinary meaning and that construction is not necessary.** However, if the Court determines that construction is needed, TVnGO offers the following proposed construction: **"comparing data stored in the memory with IP data accessible at the second input"**	"matching material stored in the memory with Internet protocol material received from the Internet at the second input"

136. The term "matching material stored in the memory with IP material available at the second input" is used in claim 5 of the '339 patent.

137. A POSA would understand the plain and ordinary meaning of "matching material stored in the memory with IP material available at the second input" to be "comparing data stored in the memory with IP data accessible at the second input."

138. As described above, the specification and figures provide details regarding the matching process. *See, e.g.*, '339 patent at 4:23-53 (e.g., "Upon detecting a matching event,

corresponding to received IP content that is of interest to the subscriber, the TV-Internet Integration Box 16 overlays the matched IP content with the current broadcast and displays the new integrated video on the subscriber's TV set 17."); Fig. 3.

W. Term 19: "the image includes an icon that indicates to the user that digital data from Internet content is currently being displayed"

TVnGO's Proposal	LGE's Proposal
TVnGO contends that this term should be given its **plain and ordinary meaning and that construction is not necessary.** However, if the Court determines that construction is needed, TVnGO offers the following proposed construction: **"the image includes an icon indicating that IP data is currently being displayed"**	"the image overlaid over a TV broadcast program includes a visual indicator informing the user that digital Internet content associated with the overlaid image is currently being broadcast"

139. The term "the image includes an icon that indicates to the user that digital data from Internet content is currently being displayed" is used in claims 7 and 18 of the '220 and '969 patents.

140. A POSA would understand the plain and ordinary meaning of "the image includes an icon that indicates to the user that digital data from Internet content is currently being displayed" to be "the image includes an icon indicating that IP data is currently being displayed."

141. TVnGO's proposed construction is consistent with the language of the claims and specification, which is already understandable to a POSA. *See, e.g.*, '220 patent at claims 1, 7, 13, 18; 4:41-60 ("…the TV-Internet Integration Box 16 overlays the matched IP content with the current broadcast and displays the new integrated video on the subscriber's TV set 17. For example, the matched information may be an icon that indicates to the subscriber that an Internet movie is currently being broadcast…"); '969 patent at claims 1, 7, 13, 18; 4:49-5:1.

X. Term 20: "the image contains textual information advising the user to press a particular button on the remote control unit"

TVnGO's Proposal	LGE's Proposal
TVnGO contends that this term should be given its **plain and ordinary meaning and that construction is not necessary.** However, if the Court determines that construction is needed, TVnGO offers the following proposed construction: **"the image includes textual information advising the user to press a particular button on the remote control unit"**	"the image overlaid over TV video contains text directing the user to press a particular button on the remote control"

142. The term "the image contains textual information advising the user to press a particular button on the remote control unit" is used in claims 8 and 19 of the '220 and '969 patents.

143. A POSA would understand the plain and ordinary meaning of "the image contains textual information advising the user to press a particular button on the remote control unit" to be "the image includes textual information advising the user to press a particular button on the remote control unit."

144. The language of the claim is clear and understandable to a POSA. TVnGO's proposed construction simply clarifies the language of the claim and is supported by the specification. *See, e.g.*, '220 patent at claims 1, 8, 13, 19, 4:50-5:1 ("The subscriber can respond to the overlaid data using a remote control unit…which is programmed to interact with the displayed icon or other data that is overlaid on the TV broadcast. To this end, the displayed IP content may optionally contain textual information advising the subscriber to press a particular button on the remote control unit."); '969 patent at claims 1, 8, 13, 19, 4:58-5:9.

Y. Term 21: "a set top box configured to decode the TV channel video and supply decoded TV channel video to the first input of [the combiner circuit]"

TVnGO's Proposal	LGE's Proposal
TVnGO contends that this term should be given its **plain and ordinary meaning and that construction is not necessary.** However, if the Court determines that construction is needed, TVnGO offers the following proposed construction: **"a set top box configured to decode the TV channel video and supply decoded TV channel video to the first input of"** the combiner circuit as defined above in Term 7	"a set top box configured to change the TV channel video into a form that can be used by [the combiner circuit] and send the TV channel changed in that form to the first input of [the combiner circuit]" The claim element "combiner circuit" is indefinite as noted above."

145. The term "a set top box configured to decode the TV channel video and supply decoded TV channel video to the first input of [the combiner circuit]" is used in claims 7 and 18 of the '945 patent; and claim 7 of the '621 patent.

146. A POSA would understand the plain and ordinary meaning of "a set top box configured to decode the TV channel video and supply decoded TV channel video to the first input of [the combiner circuit]" to be "a set top box configured to decode the TV channel video and supply decoded TV channel video to the first input of" the combiner circuit as defined above in Term 7.

147. The specification describes an exemplary configuration utilizing a set top box with reference to Figure 1:

> FIG. 1 is pictorial representation showing a mixed broadcast network 10 having a **Cable TV Box 11 coupled to a satellite 12 and a Cable TV transmitter 13 for receiving a cable TV broadcast signal (constituting first data).** An Internet broadcast signal comprising IP packet data (constituting second data) is streamed from a web server 14 via the Internet 15 (constituting a digital data communications network) to a TV-Internet Integration Box 16 for display on a TV set 17 coupled thereto. The TV set 17 may be constituted by a computer having a video card and a high resolution display monitor. However, the principal benefit of the invention is obtained when a regular TV set having low resolution is

> used, since such a configuration has not so far been used to integrate Internet programs with conventional TV broadcasts in the manner proposed by the invention. **The TV-Internet Integration Box 16 is connected to the Cable TV Box 11 for combining the broadcast TV signals received by the Cable TV Box 11** with the IP packet data broadcast via the Internet 15. Also shown is an advertiser 18 having a computer coupled to the Internet 15 for downloading advertising content to the web server 14 for storage in a database 19 and a telephone 20 coupled to the TV-Internet Integration Box 16 for feeding telephony signals to the TV-Internet Integration Box 16, which combines the received telephony signals with video data received from the Cable TV Box 11 and/or the Internet 15.

'945 patent at 3:39-64; Fig. 1; '621 patent at 3:46-4:4; Fig. 1.

148. The term "decode" is understood by a POSA to refer to a system that is able to receive data transmitted and presented in a specific format, and convert this data into a different format. In the context of TV signals this means that the signal received by the set top box can be in the form of a terrestrial, cable or satellite signal. The set-top box then processes the signal according to its particular TV broadcast standard. If the signal is encrypted, the set-top box will also descramble it. In case of a digital broadcast, where the digital TV signal is carried inside the analog signal, the set-top box will first demodulate it, then extract and decode the digital TV signal. This is consistent with and supported by the language of the claims which already provides details as to the form of the TV channel video. *See, e.g.*, '945 patent at claim 1 ("as received by the combiner circuit at the user's premises, the TV channel video conforms to a TV broadcast format standard"); '621 patent at claim 1.

Z. Term 22: "a special overlay activation signal from an external source timed relative to an event in the TV channel video displayed on the screen"

TVnGO's Proposal	LGE's Proposal
TVnGO contends that this term should be given its **plain and ordinary meaning and that construction is not necessary.** However, if the Court determines that construction is needed, TVnGO offers the following proposed construction: **"a specific signal for generating an overlay from an external source timed relative to an event in the TV channel video displayed on the screen"**	"an overlay activation signal from an external Internet source provided at the time of a specific event in the TV channel video being displayed on the screen" The term "overlay activation signal" is indefinite as noted above.

149. The term "a special overlay activation signal from an external source timed relative to an event in the TV channel video displayed on the screen" is used in claims 9 and 19 of the '945 Patent; and claim 9 of the '621 Patent.

150. A POSA would understand the plain and ordinary meaning of "a special overlay activation signal from an external source timed relative to an event in the TV channel video displayed on the screen" to be "a specific signal for generating an overlay from an external source timed relative to an event in the TV channel video displayed on the screen."

151. For the reasons explained above for Terms 5a and 5b, this phrase would be readily understood by a POSA.

AA. Term 23: "the IP material path bypasses the set top box"

TVnGO's Proposal	LGE's Proposal
TVnGO contends that this term should be given its **plain and ordinary meaning and that construction is not necessary.** However, if the Court determines that construction is needed, TVnGO offers the following proposed construction: **"the IP data path does not pass through the set top box"**	"the path through which the Internet protocol material from the Internet is transmitted is not through the set top box"

152. The term "the IP material path bypasses the set top box" is used in claims 11 and 22 of the '945 patent; and claim 8 of the '621 patent.

153. A POSA would understand the plain and ordinary meaning of "the IP material path bypasses the set top box" to be "the IP data path does not pass through the set top box."

154. A POSA would understand the term "bypass" to mean "does not pass through" as noted in TVnGO's proposed construction. The claims support this configuration. For instance, claim 1 of the '945 patent notes that the IP material "is received via a path different from that for the TV channel video." *See, e.g.*, '945 patent at claims 1, 7, 11, 12, 18, and 22; '621 patent at claims 1, 7, 8.

155. This is also supported by the specification and figures. *See, e.g.*, '945 patent at 3:39-64 ("The TV-Internet Integration Box 16 is connected to the Cable TV Box 11 for combining the broadcast TV signals received by the Cable TV Box 11 with the IP packet data broadcast via the Internet 15."); Fig. 1.

BB. Term 24: "the path through which [the combiner circuit] receives the IP material at its second input bypasses the set top box"

TVnGO's Proposal	LGE's Proposal
TVnGO contends that this term should be given its **plain and ordinary meaning and that construction is not necessary.** However, if the Court determines that construction is needed, TVnGO offers the following proposed construction: **"the path through which [the combiner circuit] receives the IP data at its second input does not pass through the set top box"** where the combiner circuit is as defined above in Term 7	"the path through which [the combiner circuit] receives the Internet protocol material from the Internet at its second input is not through the set top box" The claim element "combiner circuit" is indefinite as noted above.

156. The term "the path through which [the combiner circuit] receives the IP material at its second input bypasses the set top box" is used in claim 10 of the '339 patent.

157. A POSA would understand the plain and ordinary meaning of "the path through which [the combiner circuit] receives the IP material at its second input bypasses the set top box" to be "the path through which [the combiner circuit] receives the IP data at its second input does not pass through the set top box" where the combiner circuit is as defined above in Term 7.

158. As described for the above term, a POSA would understand the term "bypass" to mean "does not pass through." The claims, specification, and figures support this configuration and construction. *See, e.g.*, '339 patent at claim 1 (the IP format material "is received at the combiner circuit via a path different from that for the TV channel video"); 3:35-60, Fig. 1.

CC. Term 25: "processing unit"

TVnGO's Proposal	LGE's Proposal
TVnGO contends that this term should be given its **plain and ordinary meaning and that construction is not necessary.** However, if the Court determines that construction is needed, TVnGO offers the following proposed construction: **"a circuit that processes data according to programmed instructions"** TVnGO contends that this term is not governed by 35 U.S.C. §112(6). However, if the Court determines that the term is governed by 35 U.S.C. §112(6), TVnGO offers the following proposed construction: Function: "processing" Structure: "the processing unit circuitry in Fig. 5" or "The combiner unit 23 is shown coupled to a processing unit 25 although in practice it may be implemented in software by the processing unit 25. A memory 26 is coupled to the processing unit 25 for storing program data, such as profiles and program timetables etc. so as to allow the processing unit 25 to filter incoming IP content according to pre-defined profiles and other selection data. The processing unit 25 is also coupled to a user interface 27 that allows the subscriber to program the TV-Internet Integration Box 16 and store the program data in the memory 26" and equivalents thereof	**Governed by (pre-AIA) 35 U.S.C. § 112 ¶6** Vague and Indefinite / cannot be construed Function: • "pre-fetching and buffering said digital data stream . . ." and "thereby allowing said digital data stream to be displayed . . . ." ('220 Patent, claim 16) • "pre-fetching and buffering said digital data stream . . ." and "thereby allowing said digital data stream to be displayed . . . ." ('969 Patent, claim 16) Structure: The specification fails to disclose sufficient structure for performing the recited functions of the "means-plus-function" element. At most, the specification discloses a box 25 labeled "Processing Unit" (FIG. 5) with its external connections, but discloses no internal structures to perform the above recited functions. **Thus, this "means-plus-function" element is indefinite Under (pre-AIA) 35 U.S.C. § 112 ¶2.**

159. The term "processing unit" is used in claim 16 of the '220 and '969 patents.

160. A POSA would understand the plain and ordinary meaning of "processing unit" to be "a circuit that processes data according to programmed instructions." The term has a plain and ordinary meaning and clearly informs a POSA of the scope of the claim.

161. The claims of the '220 and '969 patents describe certain of the objectives of the processing unit as "pre-fetching and buffering said digital data stream from said website." See '220 and '969 patents at claim 16.

162. A POSA would understand that the processing unit has particular structural arrangements for processing data according to programmed instructions, for example, for pre-fetching a digital data stream from a website and buffering the digital data stream. A processing unit according to the invention would have a circuit structure that allows it to perform its objectives.

163. The specification provides details regarding the structure of the term processing unit. For instance, the specification describes:

> The **combiner unit 23 is shown coupled to a processing unit 25** although in practice it may be implemented in software by the processing unit 25. **A memory 26 is coupled to the processing unit 25** for storing program data, such as profiles and program timetables etc. so as to **allow the processing unit 25 to filter incoming IP content** according to pre-defined profiles and other selection data. The **processing unit 25 is also coupled to a user interface 27** that allows the subscriber to program the TV-Internet Integration Box 16 and store the program data in the memory 26. An IR receiver 28 is adapted to receive IR commands from a remote control unit described below with reference to FIG. 6 and is coupled to a **decoder 29, which decodes a received IR signal and feeds it to the processing unit 25 for further processing**.

'220 patent at 6:60-7:6; '969 patent at 7:1-15.

164. This is also shown in Figure 5, depicting the various inputs and outputs to the processing unit. *See, e.g.*, '220 patent at Fig. 5; '969 patent at Fig. 5.

165. The specification also describes that "in accordance with one embodiment, **the processing unit 25 is programmed** to access the web server 14 periodically and download current program data…The downloaded information is stored locally in the memory 26." See, e.g., '220 patent at 8:7-15; '969 patent at 8:18-25. The specification further recites that "[t]his allows the TV-Internet Integration Box 16 to pre-fetch IP content relating to all the currently displayed icons and to store the data relating thereto in the memory 26…" *See* '220 patent at 8:15-24; '969 patent at 8:26-35.

166. This is further depicted in Figure 8, which the specification describes, for example, as showing the "principal actions carried out by the TV-Internet Integration Box **when pre-fetching a digital broadcast signal**." *See, e.g.,* '220 patent at 8:25-50, Fig. 8; '969 patent at 8:36-50, Fig. 8.

167. The specification further describes pre-fetching of content in relation to Figure 3, stating "an additional layer of authorization may be provided to that stored in the database 19 for access by the web server 14, thus allowing pre-fetching of IP content and storage in the memory 25 [sic 26] of the TV-Internet Integration Box 16." *See, e.g.,* '220 patent at 4:37-41, Fig. 3; '969 patent at 4:45-49, Fig. 3.

168. The specification also describes other processing unit structures used in the invention. For instance, "[t]he remote control unit 30 includes a processing unit 31 coupled to a user interface 32, typically having a keypad or pushbuttons for program selection and setting as well as other functions." *See, e.g.,* '220 patent at 7:7-18; '969 patent at 7:18-26. Figure 6 further depicts this embodiment and processing unit 31, which shows, similar to processing unit 25 of the claims, the inputs and outputs of the processing unit 31 to achieve its objectives. *See, e.g.,* '220 patent at Fig. 6; '969 patent at Fig. 6.

169. A POSA would understand the structural arrangements of the processing unit based on the recited inputs, outputs, and objectives of the claim, and would understand that the processing unit has, for example, structural arrangements for "pre-fetching and buffering said digital data stream from said website" which allows "said digital data stream to be displayed substantially without delay."

170. The structures of the various processing units of the invention would be readily understood by a POSA based on the claims, specification, and drawings indicating the inputs, outputs, and objectives.

171. The comparable term "processor" on its own is readily understood by a POSA to be structural. The Hoarty patent contains examples of such an understanding. *See, e.g.*, Ex. 7, TVNGO_0002364–2394 at TVNGO_0002388, 4:21-22 ("The frame server 206 is one or more processors which interface with a plurality of subscribers."); TVNGO_0002392, 11:49-50 ("A separate processor in the set-top receives the descrambling authorization keys and translates them."). The Hoarty patent does not specifically describe the "processors" of the patent, further confirming my opinion that the term is readily understood in the art.

DD. <u>Term 26: "programmed processing unit"</u>

TVnGO's Proposal	LGE's Proposal
TVnGO contends that this term should be given its **plain and ordinary meaning and that construction is not necessary.** However, if the Court determines that construction is needed, TVnGO offers the following proposed construction: **"a circuit that processes data according to programmed instructions"** TVnGO contends that this term is not governed by 35 U.S.C. §112(6).	**Governed by (pre-AIA) 35 U.S.C. § 112 ¶6** Vague and Indefinite / cannot be construed Function: "carrying out at least some of the responding to the overlay activation criterion and the overlay activation signal." Structure: The specification fails to disclose sufficient structure for performing the recited functions of the "means-plus-function" element. At most, the specification discloses a box 25 labeled "Processing Unit" (FIG. 5)

However, if the Court determines that the term is governed by 35 U.S.C. §112(6), TVnGO offers the following proposed construction: Function: "processing Structure: "the processing unit circuitry in Fig. 5" or "The combiner unit 23 is shown coupled to a processing unit 25 although in practice it may be implemented in software by the processing unit 25. A memory 26 is coupled to the processing unit 25 for storing program data, such as profiles and program timetables etc. so as to allow the processing unit 25 to filter incoming IP content according to pre-defined profiles and other selection data. The processing unit 25 is also coupled to a user interface 27 that allows the subscriber to program the TV-Internet Integration Box 16 and store the program data in the memory 26" and equivalents thereof	with its external connections, but discloses no internal structures to perform the above recited functions. **Thus, this "means-plus-function" element is indefinite Under (pre-AIA) 35 U.S.C. § 112 ¶2.**

172. The term "programmed processing unit" is used in claim 14 of the '339 patent.

173. A POSA would understand the plain and ordinary meaning of "programmed processing unit" to be "a circuit that processes data according to programmed instructions." The term has a plain and ordinary meaning and clearly informs a POSA of the scope of the claim.

174. The claims of the '339 patent describe the structure associated with the "programmed processing unit" of claim 14. In particular, claim 14 recites that the "combiner circuit comprises a programmed processing unit carrying out at least some of the responding to the overlay activation criterion and the overlay activation signal." '339 patent at claim 14. claim 14 is dependent on claim 1, which describes the objectives of the "programmed processing unit" and "combiner circuit." '339 patent at claim 1. For instance, claim 1 states:

> said combiner circuit being further configured to: respond to an overlay activation criterion to cause the display screen to display the overlays as at least a part of the screen image, and respond to an overlay activation signal selected by the user at

> the user's premises and identifying one of the displayed overlays to cause the screen to display IP format material from the IP source associated with the identified overlay

’339 Patent at claim 1.

175. Based on the language of the claims, the programmed processing unit has structure capable of responding to overlay activation criterion or overlay activation signal inputs and causing the screen to display overlays or IP format material. Such details from the claims would allow a POSA to understand the structure associated with the programmed processing unit.

176. The specification also provides details regarding the programmed processing unit, as described above for processing unit. *See supra* Term 25, *e.g.*, ’339 patent at 4:41-45; 6:64-7:21; 8:6-48; Figs. 5, 6, 8.

177. As explained above, a POSA would understand the meaning of the terms combiner circuit, overlay activation criterion, and overlay activation signal.

I declare under the penalty of perjury under the laws of the United States that the foregoing is true and correct.

Dated: September 23, 2019

Michael Sprenger, Ph.D.

APPENDIX

Michael D. Sprenger, Ph.D.
4069 Bimini Ct., Boulder, CO 80301 • 720-291-8124 (mobile)
MichaelSprenger@outlook.com

Engineer, communication, video and imaging expert with 30 years of professional industry and research experience
Successfully led engineering efforts in communication, computing, video encoding, imaging and advanced technology evaluation
Creative and innovative, with 9 granted and 14 pending patents

Skills:

- Excellent analysis and problem-solving skills, with ability to quickly acquire new knowledge and apply it to new challenges
- Strong written and verbal communication skills, demonstrated ability in developing and delivering complex technical presentations & papers to a broad range of audiences
- Broad & deep background across multiple engineering disciplines, computer architecture, physics and general science
- Broad & deep computer and programming skills on variety of platforms & operating systems: Unix, PC/Windows, OS X

Areas of Expertise

- 2D and 3D video encoding and imaging technologies, including stereoscopic/multiview/free-view 3D video, capturing and display technologies, video & image processing, transcoding, data formats and related industry standards: MPEG-2, H.264/AVC, H.265/HEVC
- Over-The-Top (OTT) video streaming architectures, video formats & interfaces, Set Top Boxes (STBs), Smart TVs.
- Lossy and lossless compression of large data volumes (video/audio content, meta data) in cloud-based infrastructure for real-time and off-line applications.
- Communication Industry Standards Body Representation (Qwest/CenturyLink 1998-2017):
  - Video: MPEG-DASH IF (Motion Picture Expert Group – Dynamic Adaptive Streaming over HTTP) Interoperability Forum, SVA (Streaming Video Alliance) and CMAF (Common Media Application Format).
  - Fiber-optic access: Full Service Access Network initiative (FSAN) for FTTH Passive Optical Networks (PON) for 16 years, extending current standards (GPON, EPON) and defined new higher-speed, long-reach PON standards (NextGen-PON).
  - Telecom infrastructure: ITU-T, Broadband Forum, ATIS T1E1.4 / NIPP/COAST-NAI and FS-VDSL standards bodies, defining new standards to improve rate and reach of xDSL technologies over existing twisted pair copper infrastructure: VDSL2, Dynamic Spectrum Management, cross-talk cancellation ("vectoring"), MIMO, G.fast. Coordinated carriers' position regarding VDSL Line Code standard. Authored and co-authored numerous standards contributions.
- Communication Networks and Architectures:
  - Extensive expertise in fiber-optic transmission systems (Wavelength Division Multiplexing): architectures, standards, physical layer. SME in modulation schemes, coherent modulation techniques, super-channels, fiber types (SMF – Single Mode Fibers, NZ-DSF – Non-Zero Dispersion Shifted Fibers; large area, few-mode, multi-core & hollow-core fiber).
  - Access Network Technology: SME in telco and cable access network technology: Fiber-To-The-Home and Passive Optical Networks, in-depth knowledge of cable Hybrid Fiber Coax (HFC) architectures and evolution scenarios.
  - In-Home Networking Technologies: SME on MoCA, G.hn, powerline, plastic optical fiber (POF) and HPNA technologies.
- Computer & processor architecture: instruction-level parallelism, speculative execution, out-of-order execution, branch prediction, memory prefetching, memory dependence prediction, hardware multithreading, multi-core processors, parallel processing, multiprocessor architectures, processor-memory interconnection fabrics.
- Computer security: microarchitectural side-channel attacks (incl. Meltdown and Spectre vulnerabilities)
- Coding skills: C/C++, Perl, shells, R, Python (prototyping/SciPy/NumPy/scikit-learn), math/simulation packages: Mathematica, MatLab, MathCAD, RDBMS (SQL/MySQL), visualization packages, distributed systems.
- Discrete Event Simulation: developed simulators in C++ to model large multiprocessor networks, evaluating routing protocols, determining latency, traffic flow, link utilization, congestion patterns and scalability under realistic multiprocessor workloads.
- Secure communication and cryptography: symmetric- & public-key cryptography, key exchange protocols.
- Excellent rapid HW & SW prototyping skills: Raspberry Pi & Arduino I/O, digital & analog circuit design, HW/SW interfaces.
- Solid understanding of principles of Virtual and Augmented Reality, AI, Neural Networks, Decision Trees, Machine Learning, Sensor Fusion.
- Solid understanding of principles of GNSS, GPS, GIS, mapping systems (SLAM) & underlying technologies (Radar, LiDAR).
- Solid understanding of RFID technology (active/passive), NFC, active beacons and positioning for industrial applications.

Experience and Responsibilities:

Sprenger Consulting, LLC: (Nov. 2017 – present)

- Expert witness in patent litigation cases in the areas of 3D video & virtual reality, involving computer source code analysis to investigate correlation between patents and software & hardware functions, video encoding, consumer electronics, broadband access network technologies, claim charts construction, carrying out circuit schematic analysis, hardware design and circuit board breakdown and examination, analysis of System-on-Chip (SoC) functions as well as analysis of relevant industry standards and specifications.
- Designed ecosystem and prototype of large-scale industrial IoT application using RFID, NFC, beacon positioning, spatial location, sensor fusion, data acquisition, computer vision, imaging enhancements and integrated A/V technology.
  - Data pre-fetching and data acquisition based on spatial position of vehicle and machine assets.
  - Integrating front-end with Amazon Web Services (AWS) back-end using Elastic Compute Cloud (EC2), Lambda (event-driven), Simple Storage Service (S3) and Elastic Block Store (EBS).
  - Author of key whitepapers and presentations used to raise funding.

CenturyLink: Principal Video Architect (2016 – Nov. 2017)

- Patents and Intellectual Property:
  - Led intellectual property effort for CenturyLink video organization: authored/co-authored patents (7 granted, 15 pending) and mentored key team members, building solid patent portfolio to enable future licensing revenue opportunities. Areas: Visualization, GUI navigation, novel content navigation methods, video streaming, dynamic High Dynamic Range & Wide Color Gamut signaling, media processing, time-/place-shifting applications for set top boxes and in-home integration, Fiber-To-The-Home operational status, network health, broadband, enhanced GUIs, advanced audio control mechanisms, video encoding artifact detection, agile Digital Rights Management (DRM).
- Video Architecture and Technology:
  - Led evaluation and vendor selection of RFP for High Efficiency Video Codec (HEVC) / H.265 cloud-based video encoders-transcoders for new CenturyLink Over-The-Top (OTT) video streaming architecture. Optimized video coding rates. Coached team members in visually identifying video coding artifacts. Directed requirements for 4K/HDR-capable Set Top Box and System-on-Chip (SOC).
  - Modeling and visualization of bandwidth and storage requirements for multi-resolution, adaptive-bitrate Video-on-Demand (VoD) and Cloud-based Digital Video Recording (DVR) infrastructure.
  - Significant input into new architecture design for pre-processing, ingesting and indexing large data sets and generating meta-data.
  - Transformed CenturyLink Video Evaluation Lab, modernized large switch fabric to accommodate emerging video standards.
  - SME in Video and Audio standards, formats, encoding schemes, professional & consumer interfaces, display technologies, 4K and 8K Video, color spaces, chroma sampling, Hybrid Log Gamma (HLG), High Dynamic Range (HDR) & Wide Color Gamut (WCG), High Frame Rate (HFR) technologies as well as current and emerging trends in consumer electronics.
  - SME in established and emerging video & audio encoding technologies & standards: MPEG-2, MPEG-4 AVC/H.264, HEVC/H.265, VC-1, Google VP8/VP9, Cisco Thor, AV1, Dolby Digital / AC-3 / AC-4, DD+, AAC, HE-AAC.

CableLabs: Principal Architect (Optical Technologies, 2014 – 2016) and Consultant (2016)

- Pioneered novel secure imaging system using unique ID, time & location information with Trusted Platform Module (TPM).
- Co-authored secure imaging patent (granted).
- Established Foundation for Novel Methods for Detecting Interference Effects in RF-over-Glass Networks (RFoG): Discovered unique noise characteristic suitable for detection of detrimental Optical Beat Interference (OBI) in RFoG networks; developed fundamental principles for multiple approaches to detect OBI via dedicated hardware and signal processing algorithms.
- Set up Fiber-optic Lab for testing of PON/EPON equipment and new technologies, as well as development of novel deployment scenarios. Hands-on experience with fiber cabling, connector types, passive optical splitters and eye safety procedures.
- Coherent Modulation to multiply spectral efficiency in fiber link to HFC Fiber Nodes: pioneered novel low-complexity method for fiber-optic high-order signal modulation, addressing future fiber strand shortage in operator networks. Initiated innovation project to demonstrate the viability of low-complexity approach to coherent modulation over short distances, demonstrating long remaining life of deployed fiber to accommodate anticipated growth, significantly reducing future capital expenses for new fiber builds. Established new fiber-optic lab from ground up. Extensive experience in fiber-optic lab work, test instruments (optical spectrum analyzers, GHz-range signal generators, optical time domain reflectometers (OTDRs), fusion splicing), setting up & verifying novel configurations, conducting physical layer tests and analyzing results.
- Produced and led panel discussion at CableLabs Summer Conference: "Fiber-Optic Communication Beyond 100 Gbps"; hosted recognized industry experts in the field (from Comcast, Infinera and Corning), addressing exponential bandwidth growth, super-channel approach to higher spectral efficiency and novel ultra-low loss & large effective area fiber types.

CenturyLink/Qwest/US-West: Staff Engineer, Distinguished Member of Technical Staff (1998-2014)

- Technical Advisory Board: Editor, contributor & team lead, bi-annual technology assessment, report and readout to CenturyLink (Qwest) CTO, interfacing with large customers (incl. US Government agencies), covering emerging technologies (fiber-optic networking, security, traffic analysis & optimization, network redundancy, video) and assessing their impact onto CenturyLink network, services & business. Successfully led a diverse team of expert contributors on a broad range of technologies, gathering and compiling key information into reports for distribution to executive leadership and presentation to high-level government officials.
- National Network Data Planning: responsible for strategic planning of CenturyLink architecture and network scalability to handle doubling of data traffic every 18-24 months. Initiated and took technical lead in Proof-of-Concept for Software Defined Networking (SDN) and Network Functions Virtualization (NFV) system.
- Fiber Strategy: Responsible for assessment and selection of new fiber types for Long Haul, Metro and Access applications, including physical layer propagation characteristics, in view of future-proofing CenturyLink's fiber backbone for 400G & superchannel transmission and beyond. Responsible for establishing 400km fiber-optic testbed with new Super-Large Area fiber, enabling the evaluation of higher optical power, improved SNR & extended reach optical transmission systems.
- Video encoder and head-end equipment evaluation & vendor selection: CenturyLink (Qwest) IPTV system (multiple rounds, 2004-2012), responsible for strategy, deployment criteria and recommendation to leadership. Took projects from beginning to end, directed other team members throughout encoder evaluation process and led entire process involving hardware setup (source – encoders – decoders – displays), test content acquisition/selection and video quality evaluation, numerous video encoder RFIs/RFPs, multiple rounds of CenturyLink (Qwest) IPTV Set-Top-Box RFPs, requirements and vendor selection.
- Access Network Evolution: responsible for emerging Fiber-To-The-x/FTTH access architectures, network evolution and migration path, responsible for assessing viability of emerging broadband technologies and developing migration strategies.
- Home Network Technology: initiated and took project & technical lead in HPNA 3.0 vs. MoCA evaluation, took projects from beginning to end, directed other team members, coordinated vendor equipment and home trial locations, directed and conducted field test with video team, responsible for vendor selection and strategy recommendation to leadership. Main author of initial ITU-T/ATIS Joint Effort Multi-Wire-type Home Network Technology Proposal for a new, unified HN technology operating over coax, twisted pair, electrical lines with QoS provisions for high-quality video services; coordinating proposal with other North American carriers, resulted in new ITU-T G.hn Home Networking standard.
- Technical lead for strategic projects and numerous RFPs in the IPTV, Video Head-End and Broadband space:
  - Spearheaded DSL Speed & Stability Optimization (ASSIA) deployment: took multi-year project from first vendor contact to lab evaluation, field trial, software fine-tuning and final hand-off to Operations. Increased first-year revenue in upgraded areas by $5M (15% higher than projected). ASSIA technology is now used throughout CenturyLink DSL network.
  - Conducted RFIs/RFPs for Next-Generation Access Networks using Fiber-To-The-x and GPON technologies.
  - Established BPON → GPON evolution scenarios and determined optimal migration strategies; initiated FTTH/PON Optical Power Budget calculation, setup of tools and knowledge transfer into planning documents, workflow and IT systems.
  - Established VDSL2, ADSL2+ and Pair Bonding technology migration strategies and established deployment criteria.
- Expert witness: key technical expert witness for CenturyLink in litigation related to fiber-optic access & backhaul technologies.

University of Colorado: Doctoral Student and Research Assistant, Optical Computing Systems Center (1991-1997):

- Doctoral dissertation: "Benefits and Limits of Multithreading in Shared-Memory Multiprocessors" – simulation, design and implementation of optical deflection router and WDM interconnects for ultra-highspeed shared memory multiprocessors.
- Pioneered novel, adaptive wavelength-tracking WDM technology (principal design, physical layer simulation, demonstration hardware); main author of patent text and main designer of proof-of-principle demonstration project for raising of research funds; main author of Small Business Innovation Research grant request (SBIR) to move project out of research phase into commercialization.
- Conducted research on superscalar and multithreaded processor architectures, MIMD and SIMD multiprocessor architectures, processor-memory interconnection fabrics, cache coherency, instruction-level parallelism, speculative execution, out-of-order execution and branch prediction mechanisms.
- Image Processing: scientific satellite image processing, including artifact removal, de-noising, sharpening and color correction.

Graf & Reber Consulting & Engineering (Basel, Switzerland): Software Engineer (1988-1989)

- Industrial facilities and building automation, control & HVAC using Siemens control systems; initiated introduction of novel project management software and database systems into IT workflow.

Intellectual Property, Awards, Achievements:

- Received CenturyLink Government Services Award 2013: Outstanding Contributions for leading Technology Advisory Board
- Representative, Industrial Advisory Board, University of Colorado, Dept. of Electrical, Computer and Energy Engineering (CableLabs Outreach Program 2014-2016).
- Award for Outstanding Personal Contribution in Completing the Objectives of the Full Service Very High Speed Digital Subscriber Line standardization effort (FS-VDSL).
- Featured on OSP Magazine cover and in main cover story (05/2013 issue, "Game Changers 2013").
- Best Speaker Award: BOBAN Conference, CSELT (2000).

Granted Patents:

- US 7,889,670 B2: Dynamic Modem Bandwidth Checking
- US 8,583,758 B2: Network-based format conversion
- US 8,621,531 B2: Real-time on demand server
- US 8,856,118 B2: Creation and transmission of rich content media
- US 9,246,582 B2: Use of Dying Gasp to Locate Faults in Communications Networks
- US 9,722,699 B2: Systems and methods for managing power at an optical network terminal
- US 10,051,312 B2: Method and System for Implementing Media Stream Synchronization
- US20180084305A1: Video Quality Optimization Based on Display Capabilities
- US 20180095656 A1: Method and System For Implementing Content Navigation or Selection Using Touch-Based Input

Education:

- B.S. Electrical Engineering, 1988, Federal Institute of Technology (ETH), Zürich, Switzerland
- M.S. Electrical Engineering, 1991, University of Colorado at Boulder
- Ph. D. Electrical Engineering, 1998, University of Colorado at Boulder

Languages:

English, German (native), French, Spanish.

EXHIBIT 7

to Declaration of Charles Cantine in Support of Plaintiff TVnGO's Opening Claim Construction Brief

US006205582B1

(12) **United States Patent**
Hoarty

(10) **Patent No.: US 6,205,582 B1**
(45) **Date of Patent: Mar. 20, 2001**

(54) **INTERACTIVE CABLE TELEVISION SYSTEM WITH FRAME SERVER**

(75) Inventor: **W. Leo Hoarty**, Morgan Hill, CA (US)

(73) Assignee: **ICTV, Inc.**, Los Gatos, CA (US)

(*) Notice: Subject to any disclaimer, the term of this patent is extended or adjusted under 35 U.S.C. 154(b) by 0 days.

(21) Appl. No.: **09/156,845**

(22) Filed: **Sep. 18, 1998**

Related U.S. Application Data

(60) Provisional application No. 60/067,990, filed on Dec. 9, 1997.

(51) **Int. Cl.**[7] **H04N 7/173**; H04N 7/16

(52) **U.S. Cl.** **725/93**; 725/116; 725/146

(58) **Field of Search** 348/6, 7, 12, 13; 709/219, 217; 455/3.1, 4.1, 4.2, 5.1; 370/353, 486, 487, 352, 401

(56) **References Cited**

U.S. PATENT DOCUMENTS

4,247,106	1/1981	Jeffers et al. .
4,264,924	4/1981	Freeman .
4,264,925	4/1981	Freeman et al. .
4,290,142	9/1981	Schnee et al. .
4,302,771	11/1981	Gargini .
4,350,980	9/1982	Ward .
4,367,557	1/1983	Stern et al. .
4,395,780	7/1983	Gohm et al. .
4,450,477	5/1984	Lovett .
4,454,538	6/1984	Toriumi .
4,475,123	10/1984	Dumbauld et al. .
4,491,983	1/1985	Pinnow et al. .
4,506,387	3/1985	Walter .
4,507,680	3/1985	Freeman .
4,533,948	8/1985	McNamara et al. .
4,536,791	8/1985	Campbell et al. .
4,538,174	8/1985	Gargini et al. .

(List continued on next page.)

FOREIGN PATENT DOCUMENTS

0 419 137 B1	9/1990	(EP) .
0 523 618 A2	7/1992	(EP) .
0 594 350 A1	10/1993	(EP) .
0 624 039 A2	11/1994	(EP) .
2-17776	1/1990	(JP) .
WO 89/08967	9/1989	(WO) .
WO 90/13972	11/1990	(WO) .
WO 93/22877	11/1993	(WO) .
WO 94/16534	7/1994	(WO) .
WO 95/15658	6/1995	(WO) .
WO 95/32587	11/1995	(WO) .
WO 97/33434	9/1997	(WO) .

OTHER PUBLICATIONS

Insight Product Literature.
"Two–way applications for cable television systems in the '70s", Ronald K. Jurgen; An IEEE Spectrum applications report, Nov. 1971.
"Design of a Switched Broad–Band Communications Network for Interactive Services", IEEE Transactions on Communikcations, vol. com–23, No. 1, Jan. 1975, pp. 49–55.
"An Integrated Network Using Fiber Optics (Info) for the Distribution of Video, Data, and Telephone in Rural Areas", IEEE Transactions on Communications, vol. com–26, No. 7, Jul. 1978, pp. 1037–1045.

(List continued on next page.)

Primary Examiner—Andrew Faile
Assistant Examiner—Kieu-Oanh Bui
(74) *Attorney, Agent, or Firm*—Bromberg & Sunstein LLP

(57) **ABSTRACT**

In an interactive cable system having a plurality of assignable interactive controllers which communicate with subscribers through an information service distribution network, a frame server is provided for interfacing with a plurality of subscribers. A system manager assigns either the frame server or one of the plurality of interactive controllers to subscribers requesting interactive service. The frame server preferably delivers interactive pages which need only be transmitted intermittently, such as still frame images.

9 Claims, 21 Drawing Sheets

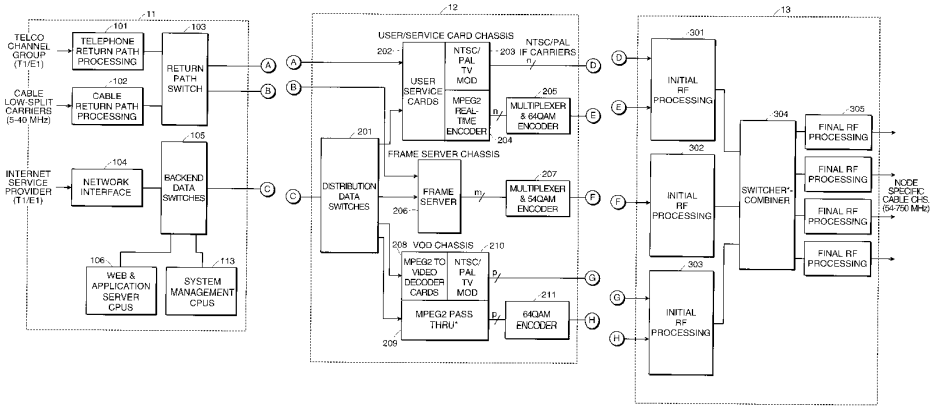

TVNGO_0002364

U.S. PATENT DOCUMENTS

4,538,176		8/1985	Nakajima et al. .	
4,573,072		2/1986	Freeman .	
4,602,279		7/1986	Freeman .	
4,625,235		11/1986	Watson .	
4,627,105		12/1986	Ohashi et al. .	
4,633,462		12/1986	Stifle et al. .	
4,695,880		9/1987	Johnson et al. .	
4,706,121		11/1987	Young .	
4,734,764		3/1988	Pocock et al. .	
4,749,992		6/1988	Fitzemeyer et al. .	
4,750,036		6/1988	Martinez .	
4,792,849		12/1988	McCalley et al. .	
4,805,134		2/1989	Calo et al. .	
4,807,031		2/1989	Broughton et al. .	
4,829,372		5/1989	McCalley et al. .	
4,829,558		5/1989	Welsh .	
4,847,698		7/1989	Freeman .	
4,847,699		7/1989	Freeman .	
4,847,700		7/1989	Freeman .	
4,860,379		8/1989	Schoeneberger et al. .	
4,876,592		10/1989	Von Kohorn .	
4,890,320		12/1989	Monslow et al. .	
4,891,694		1/1990	Way .	
4,901,367		2/1990	Nicholson .	
4,905,094		2/1990	Pocock et al. .	
4,912,760		3/1990	West, Jr. et al. .	
4,918,516		4/1990	Freeman .	
4,937,821		6/1990	Boulton .	
4,941,040		7/1990	Pocock et al. .	
4,947,244		8/1990	Fenwick et al. .	
4,961,211		10/1990	Tsugane et al. .	
4,975,771		12/1990	Kassatly .	
4,995,078		2/1991	Monslow et al. .	
5,014,125		5/1991	Pocock et al. .	
5,027,400		6/1991	Baji et al. .	
5,051,822		9/1991	Rhoades .	
5,093,718		3/1992	Hoarty et al. .	
5,119,188		6/1992	McCalley et al. .	
5,130,792		7/1992	Tindell et al. .	
5,133,079		7/1992	Ballantyne et al. .	
5,136,411		8/1992	Paik et al. .	
5,172,413		12/1992	Bradley et al. .	
5,191,410		3/1993	McCalley et al. .	
5,220,420		6/1993	Hoarty et al. .	
5,236,199		8/1993	Thompson, Jr. .	
5,253,341		10/1993	Rozmanith et al. .	
5,319,455		6/1994	Hoarty et al. .	
5,321,514		6/1994	Martinez .	
5,355,162		10/1994	Yazolino et al. .	
5,359,601		10/1994	Wasilewski et al. .	
5,371,532		12/1994	Gelman et al. .	
5,404,393		4/1995	Remillard .	
5,410,344		4/1995	Graves et al. .	
5,412,720		5/1995	Hoarty .	
5,418,559		5/1995	Blahut .	
5,422,887	*	6/1995	Diepstraten et al.	370/85.1
5,442,389		8/1995	Blahut et al. .	
5,446,490		8/1995	Blahut et al. .	
5,469,283		11/1995	Vinel et al. .	
5,469,431		11/1995	Wendorf et al. .	
5,495,295		2/1996	Long .	
5,526,034		6/1996	Hoarty et al. .	
5,539,449	*	7/1996	Blahut et al.	348/7
5,548,340		8/1996	Bertram .	
5,550,578		8/1996	Hoarty et al. .	
5,561,708		10/1996	Remillard .	
5,570,126	*	10/1996	Blahut et al.	348/7
5,587,734		12/1996	Lauder et al. .	
5,631,693		5/1997	Wunderlich et al.	348/7
5,668,592		9/1997	Spaulding, II	348/13
5,961,603	*	10/1999	Kunkel et al.	709/229
5,995,488	*	11/1999	Kalkunte et al.	370/232

OTHER PUBLICATIONS

"Proposal for a Hub Controlled Cable Television System Using Optical Fiber", Clifford B. Schrock, IEEE Transactions on Cable Television, vol. catv–4, No. 2, Apr. 1979, pp. 70–77.

"INDAX: An Operational Interactive Cabletext System", IEEE Journal on Selected Areas in Communications, vol. sac–1, No. 2, Feb. 1983, pp. 285–294.

"The Broadband Solution—Metropolitan CATV Networks", Proceedings of Videotex '84, Apr. 1984, all pages.

"Distributed Switching for Data Transmission over Two–Way CATV", Tarek N. Saadawi, Senior Member, IEEE and Mischa Schwartz, Fellow, IEEE, 1985, IEEE.

Japanese Patent No. 63–33988, Michio Kuribayashi, Jul. 28, 1986"Picture Signal Supply System".

"Video on Demand Without Compression: A Review of The Business Model, Regulation and Future Implication", Jack A. M. Van der Star, Chairman, Image Systems Corporation, 305–12886 78th Ave., Surrey B.C., Canada.

"The application of Optical Systems for Cable TV", M. Welzenbach and B. Wiest, AEG–Telefunken, Backnang, Federal Republic of Germany, IEEE LCS Magazine, Feb. 1990.

"Tapped Fiber vs. Fiber–Reinforced Coaxial CATV Systems", David Large, IEEE Magazine, Feb. 1990.

"Photonics for Cable Television System Design", Stephen D. Dukes, Communications Engineering and Design, May 1992.

"Videotex (Data Transmission System)", Jan Gecsei, Chapter 6, "Topology of Videotex Networks", 1983 by Prentice–Hall, Inc.

"A Passive Optical/Coax Hybrid Network Architecture for Delivery of CATV, Telephony and Data Services", Dr. M. Farooque Mesiya, 1993 NCTA Technical Papers.

"DTMF–TV, The Most Economical Approach to Interactive TV", Jack Thompson, Pres. & CEO, GNOSTECH Incorporated, NCF '95 Session T–38–C.

"The Awakening™ 3.0", by John W. Thompson, Jr., 995 The National Academy of Sciences.

"The Smart Headend—A Novel approach to Interactive Television", by W. Leo Hoarty, Pres. & Chief Technical Officer, ICTV, Inc., 1994, 1995 ICTV, Inc.—All Rights Reserved, Presented to the Montreux Int'l TV Symposium—Jun. 9, 1995, pp. 1–21.

* cited by examiner

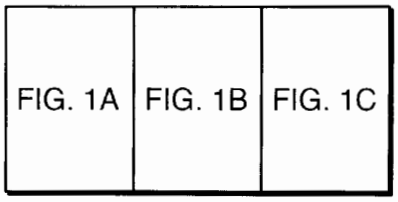

FIG. 1

FIG. 1A

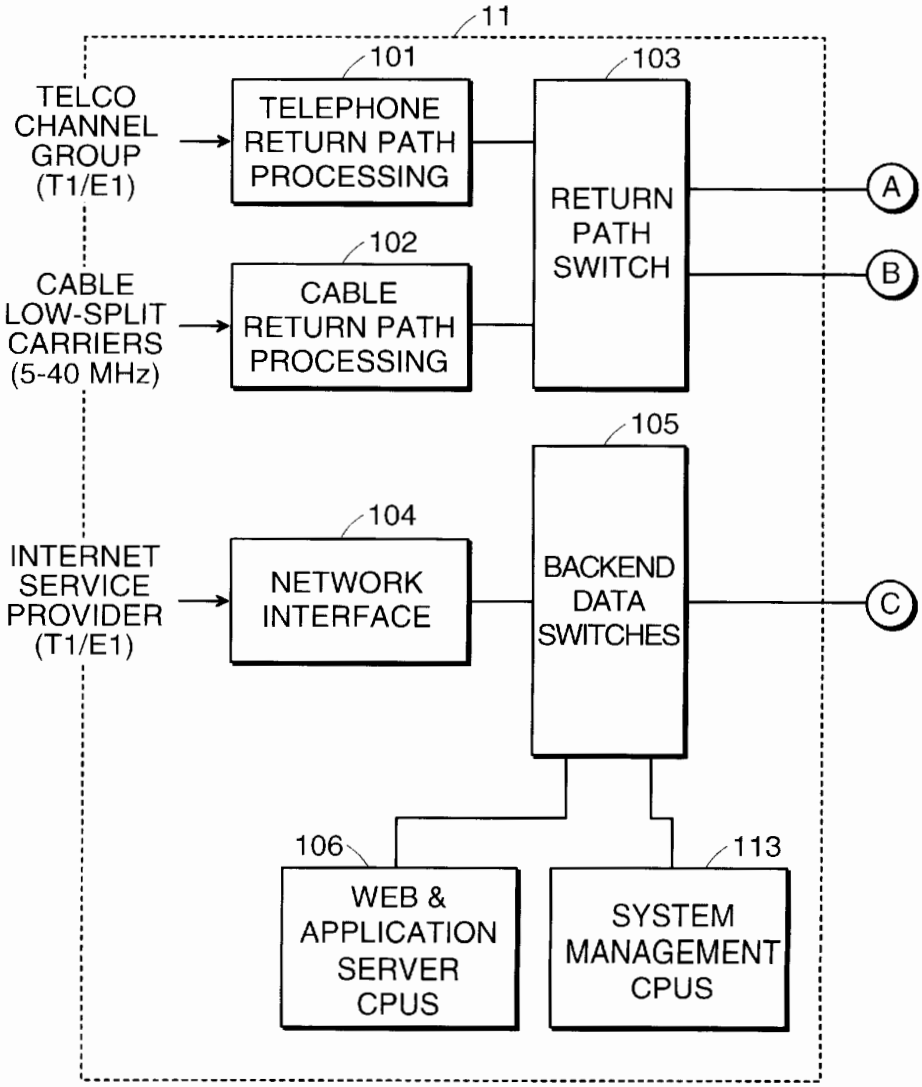

TVNGO_0002366

FIG. 1B

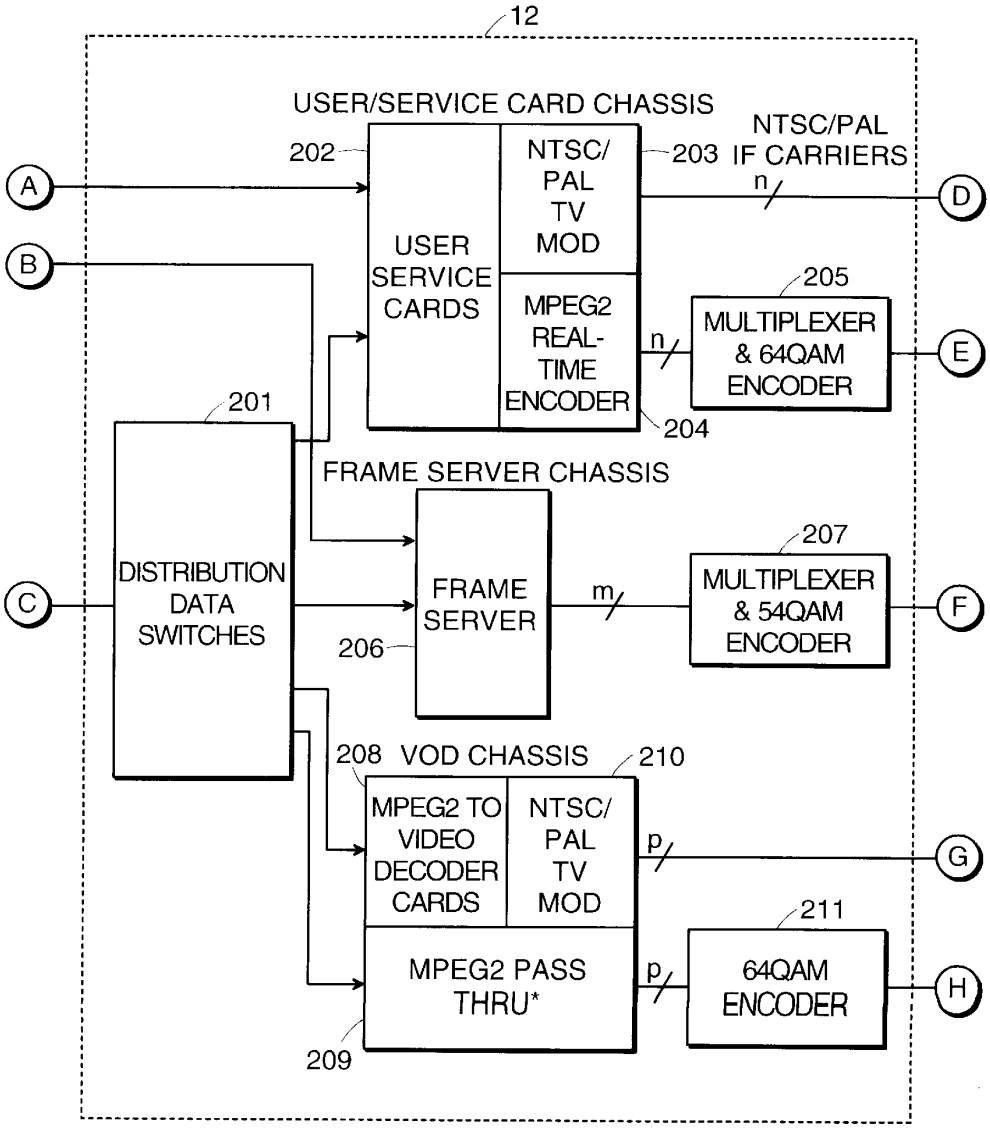

TVNGO_0002367

FIG. 1C

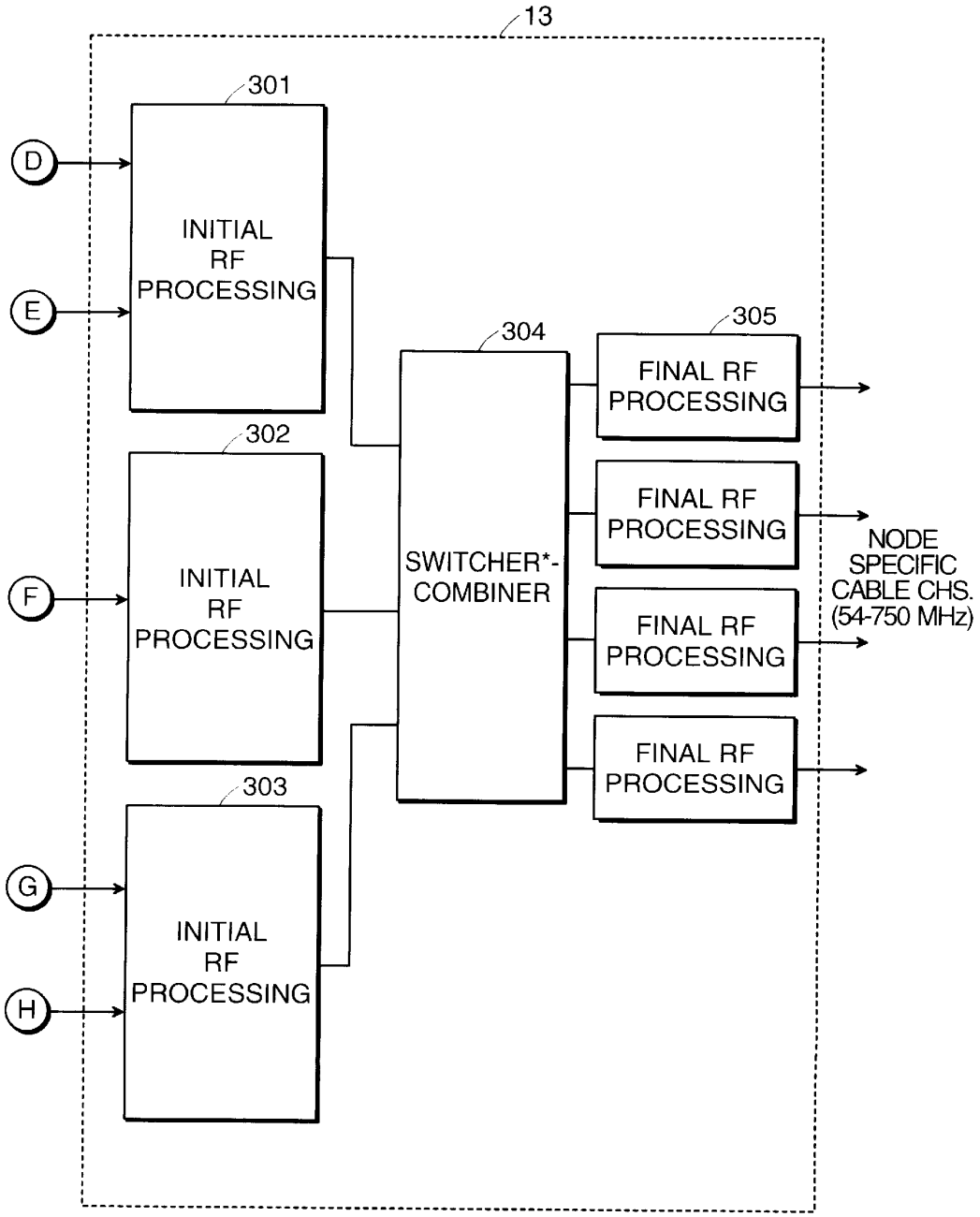

TVNGO_0002368

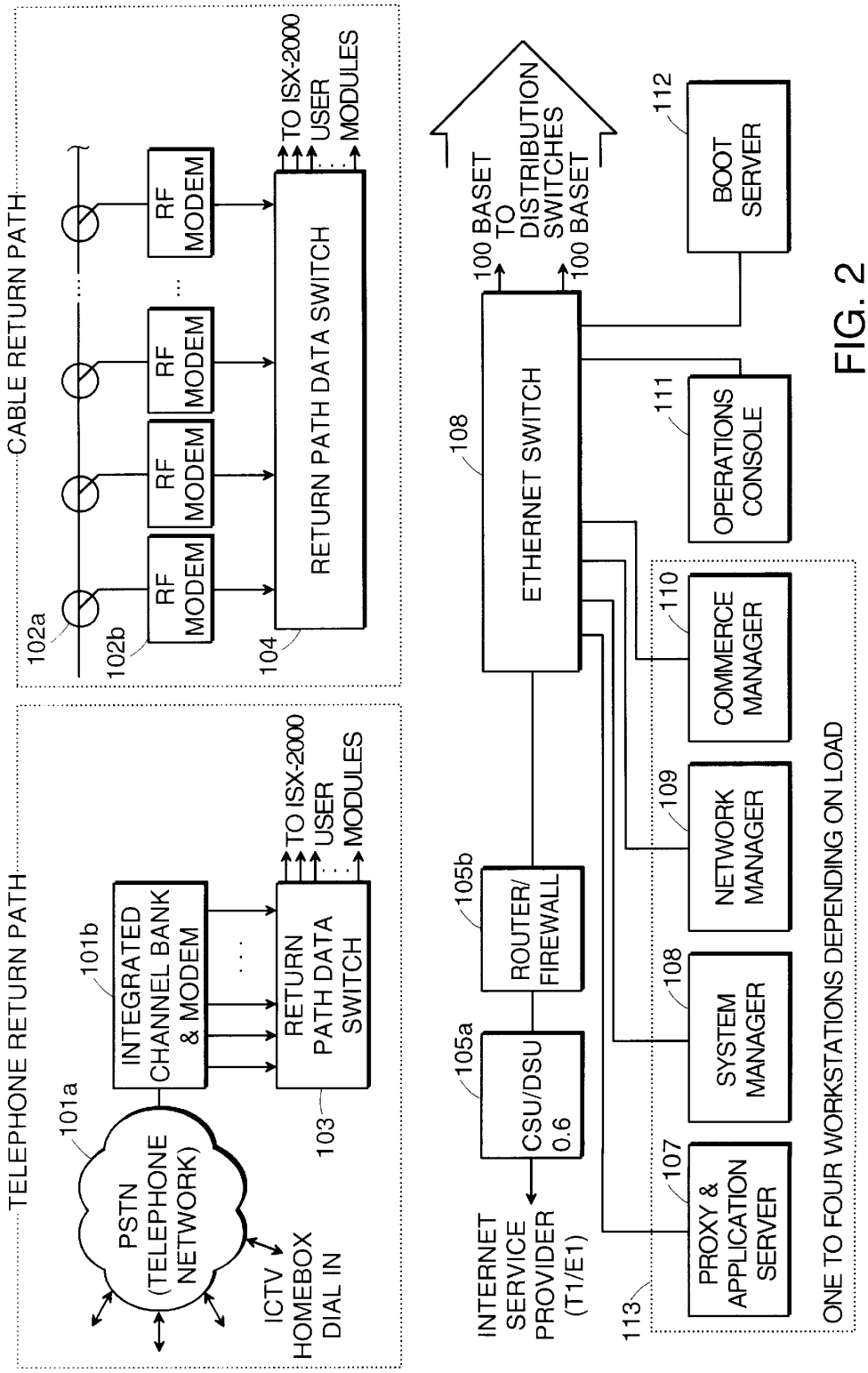

FIG. 2

TVNGO_0002369

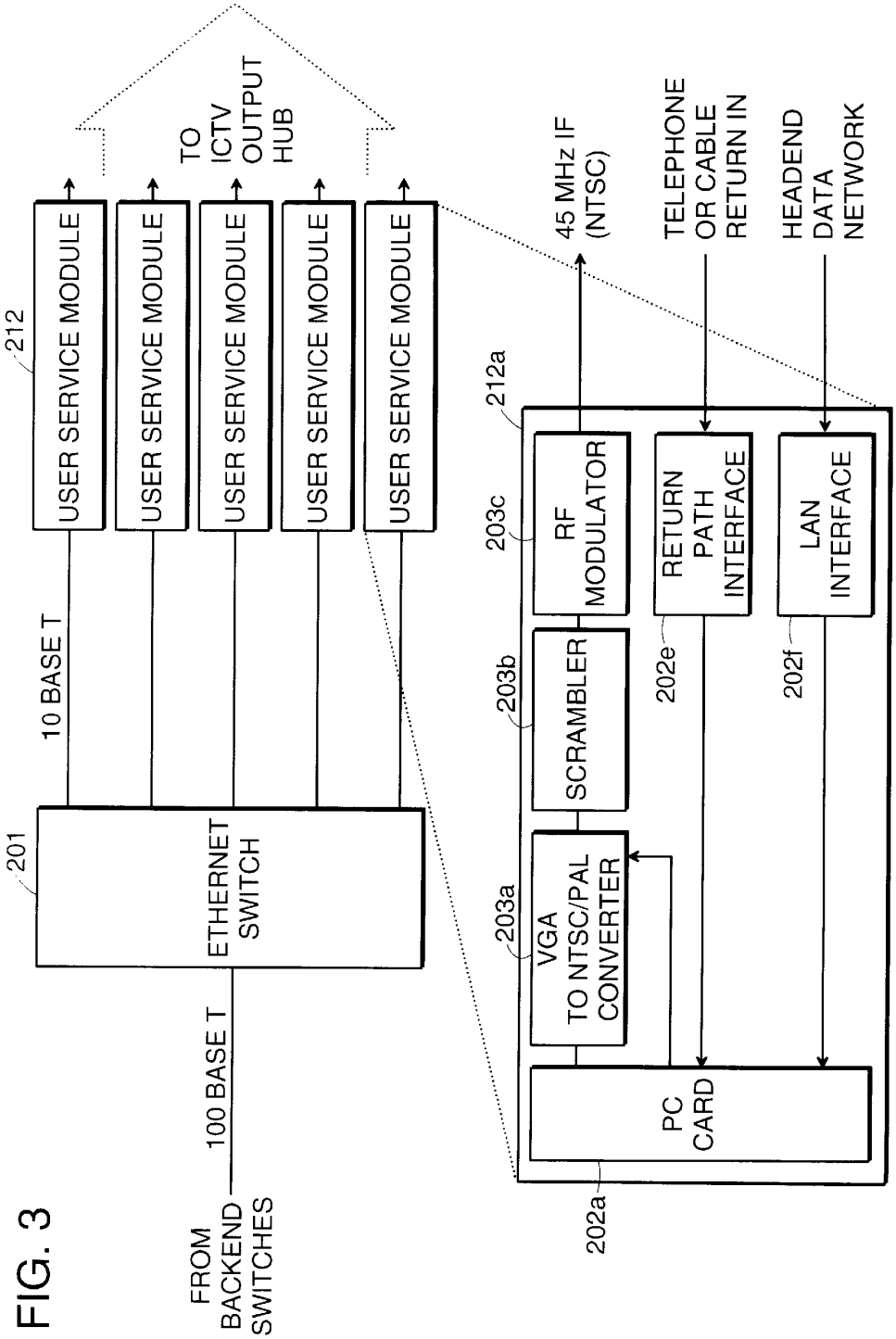

FIG. 3

TVNGO_0002370

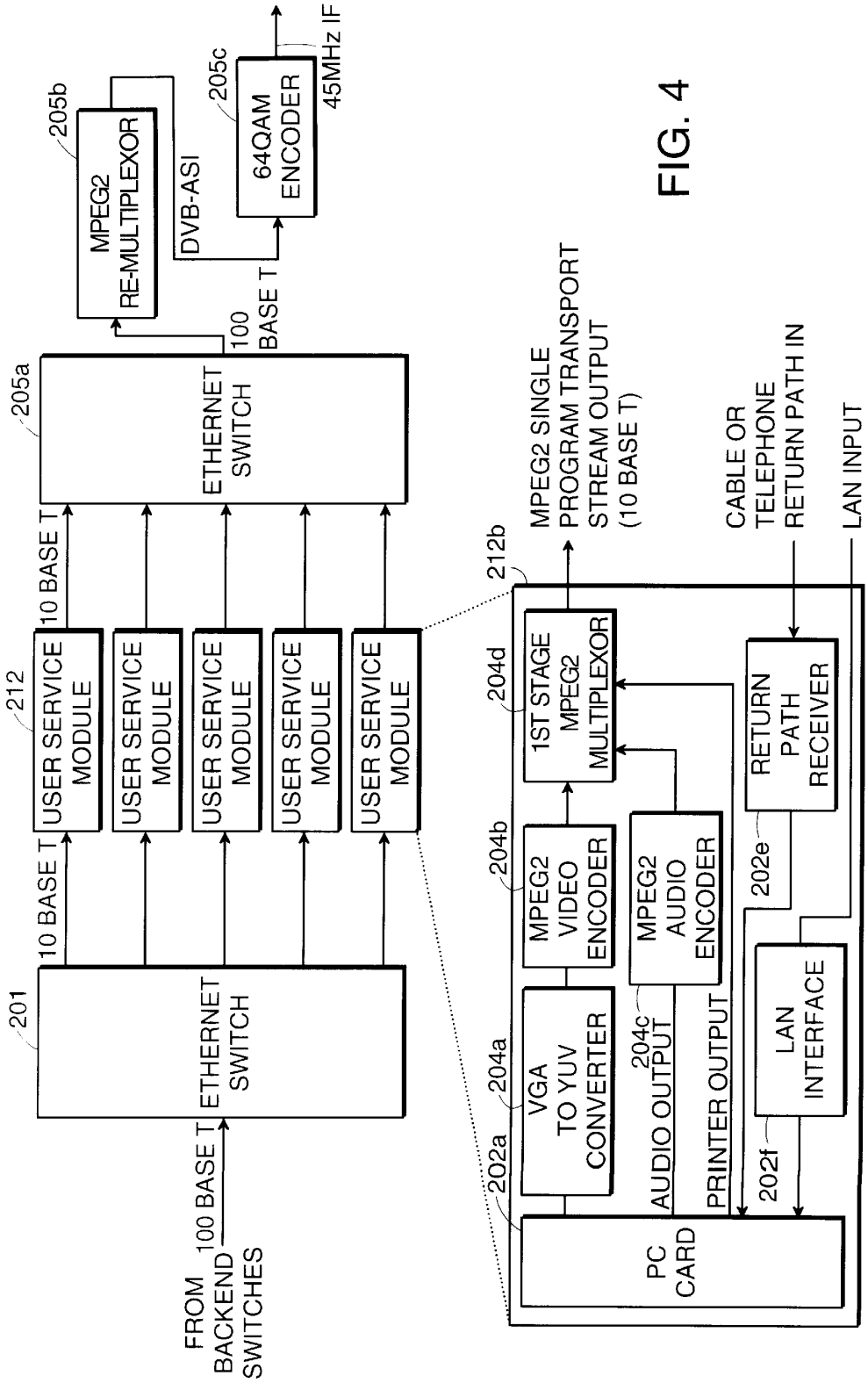

FIG. 4

TVNGO_0002371

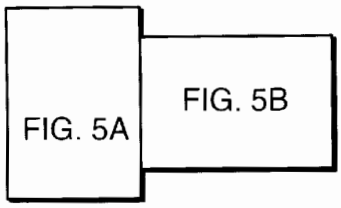

FIG. 5

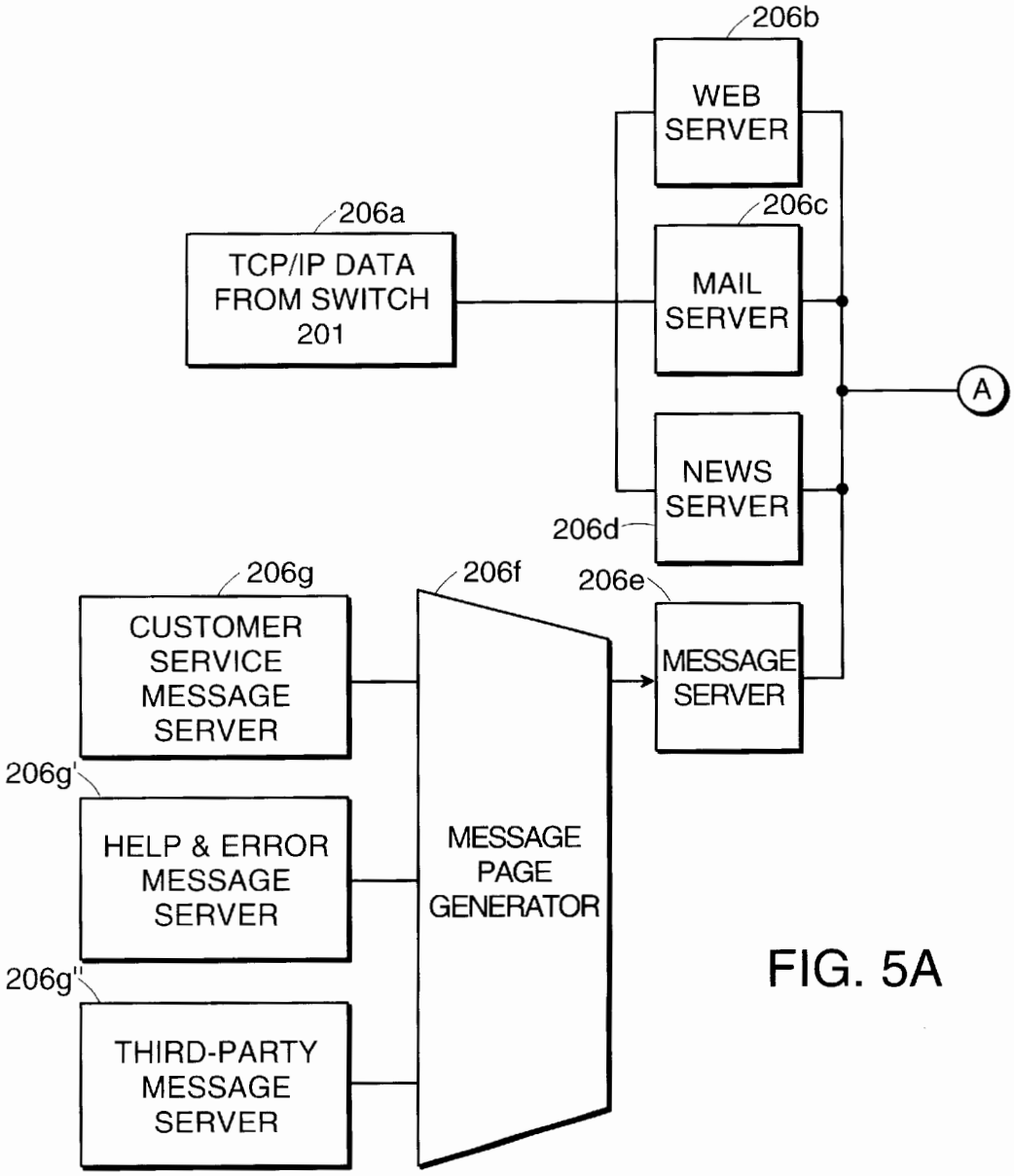

FIG. 5A

TVNGO_0002372

FIG. 5B

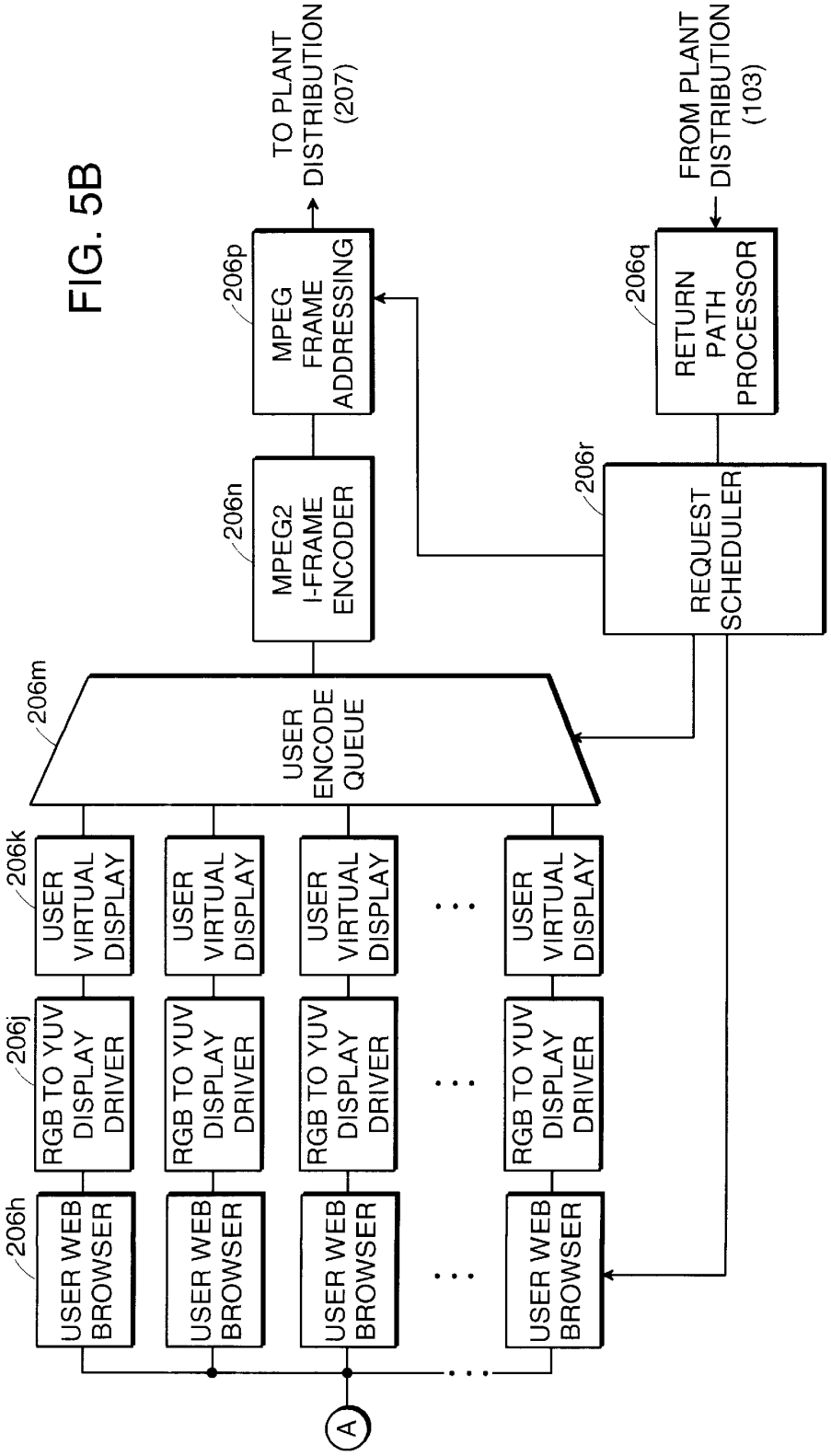

TVNGO_0002373

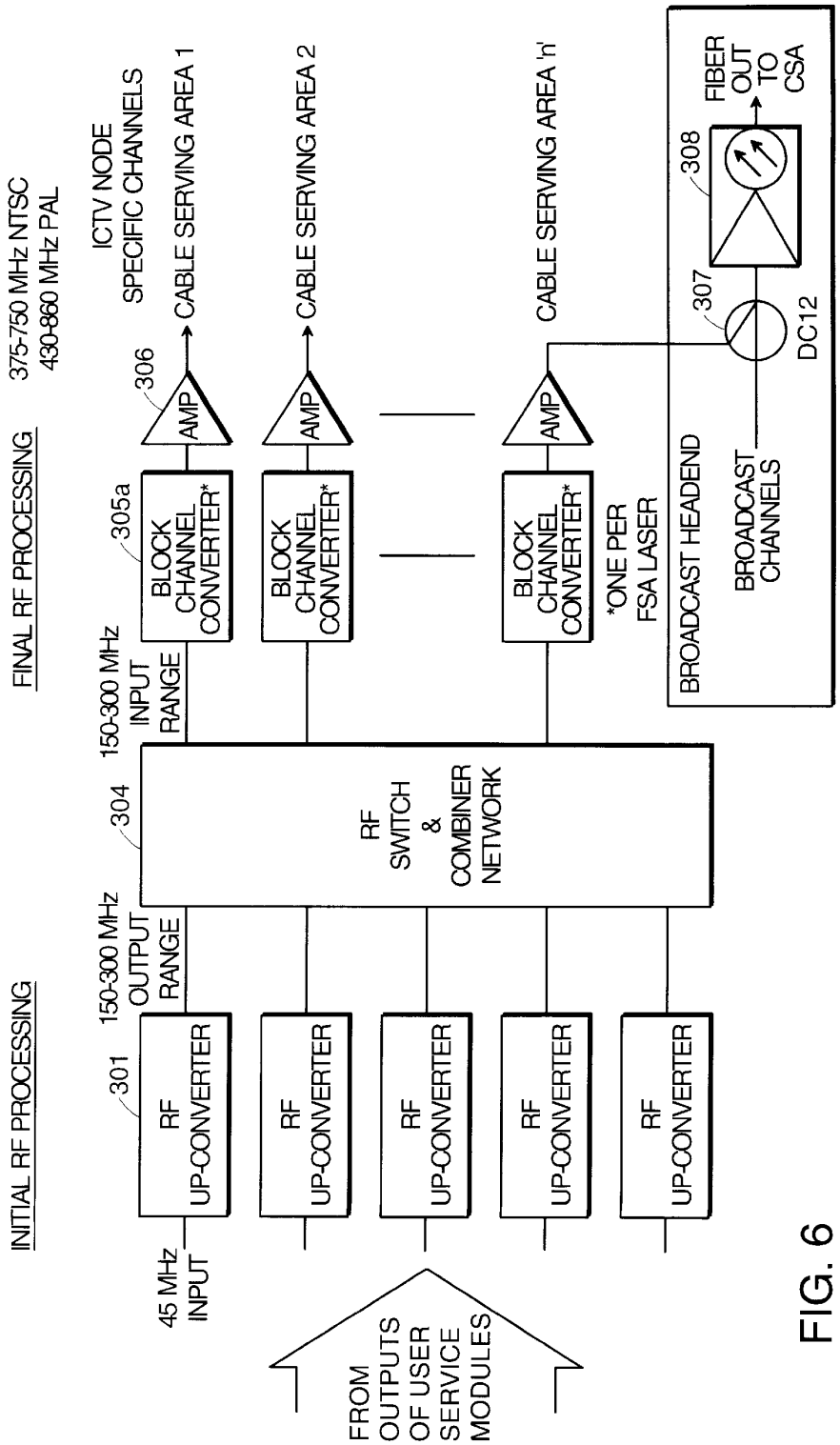

FIG. 6

TVNGO_0002374

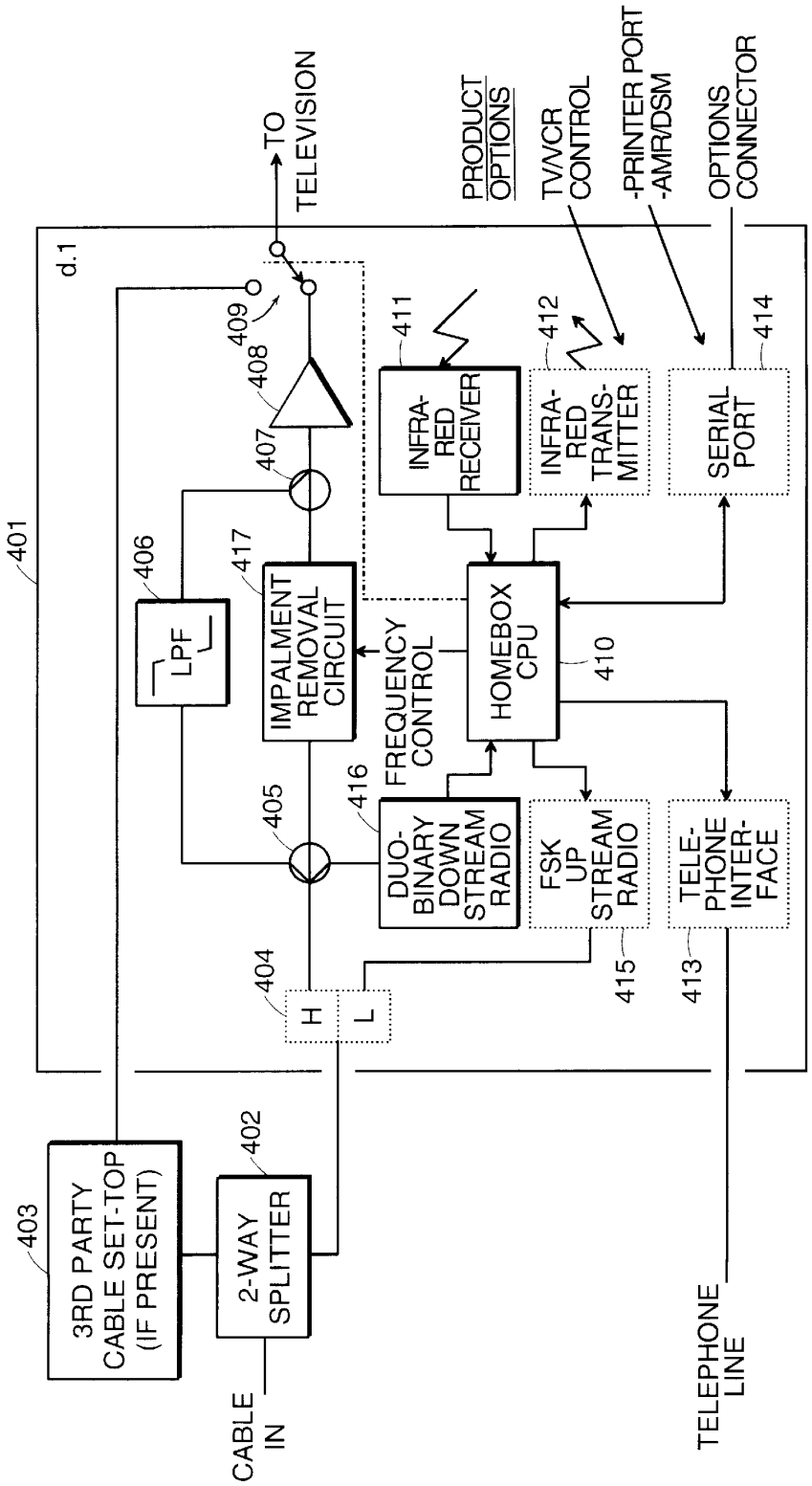

FIG. 7

TVNGO_0002375

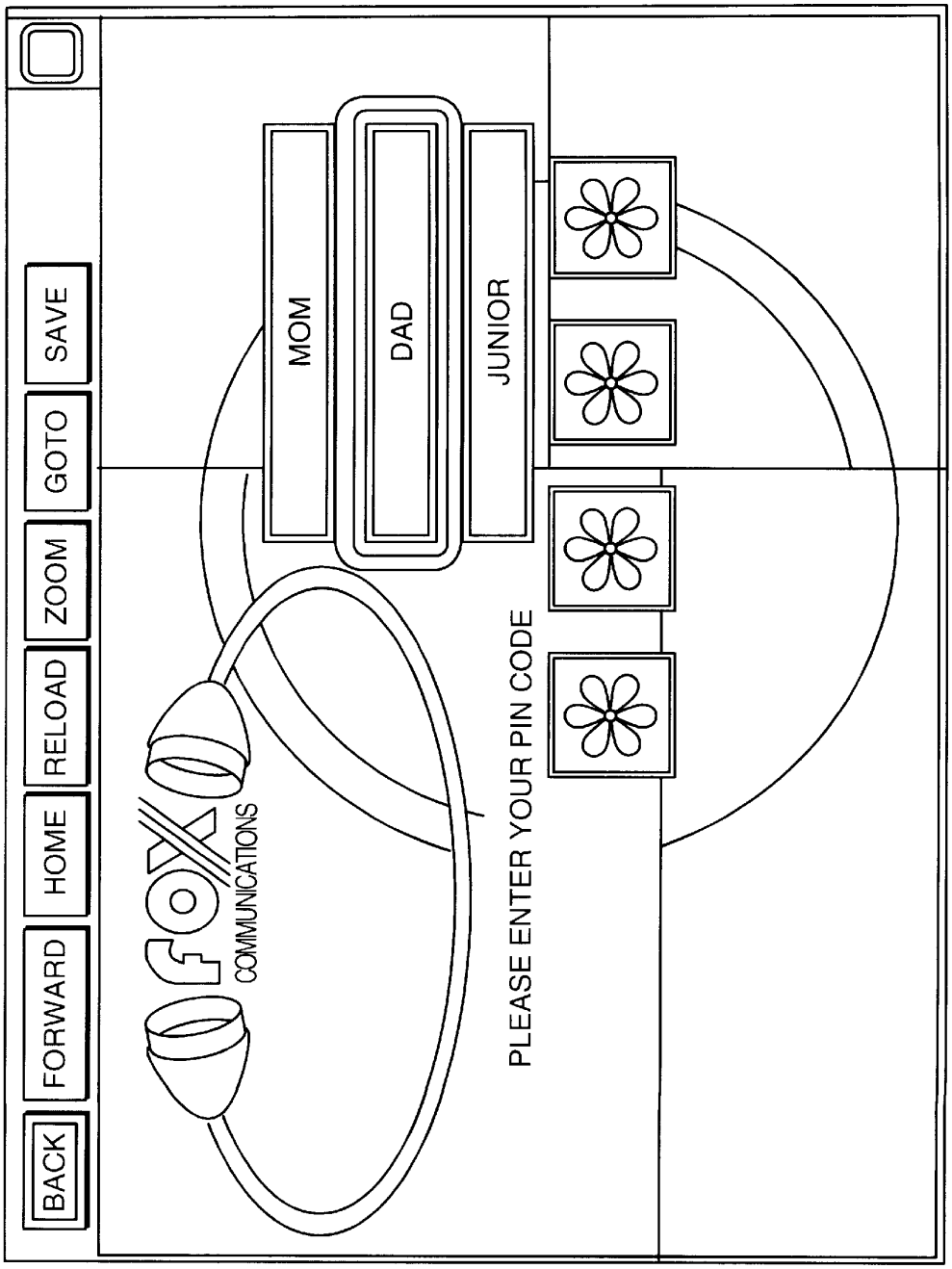

FIG. 8A

TVNGO_0002376

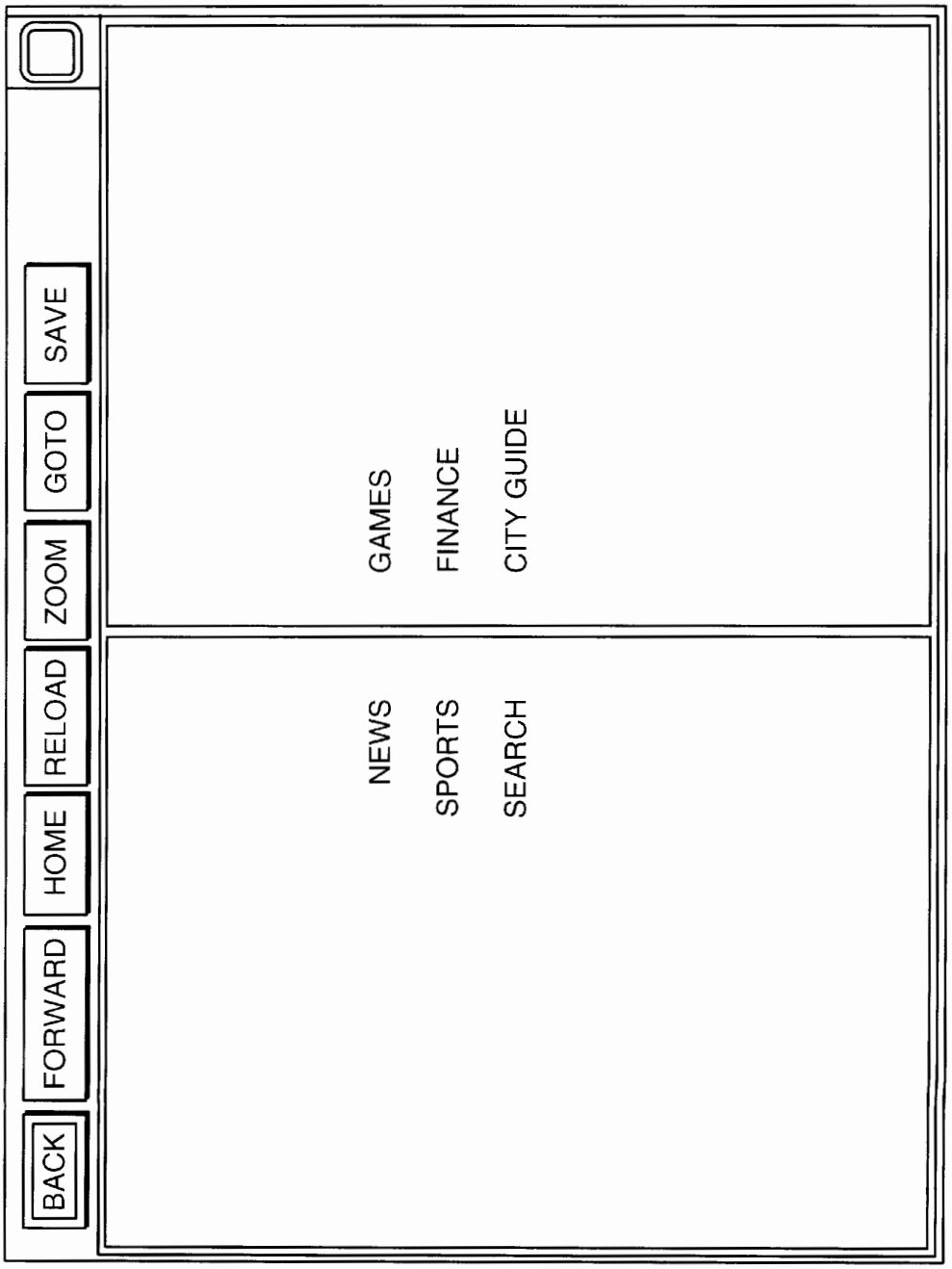

FIG. 8B

TVNGO_0002377

FIG. 8C

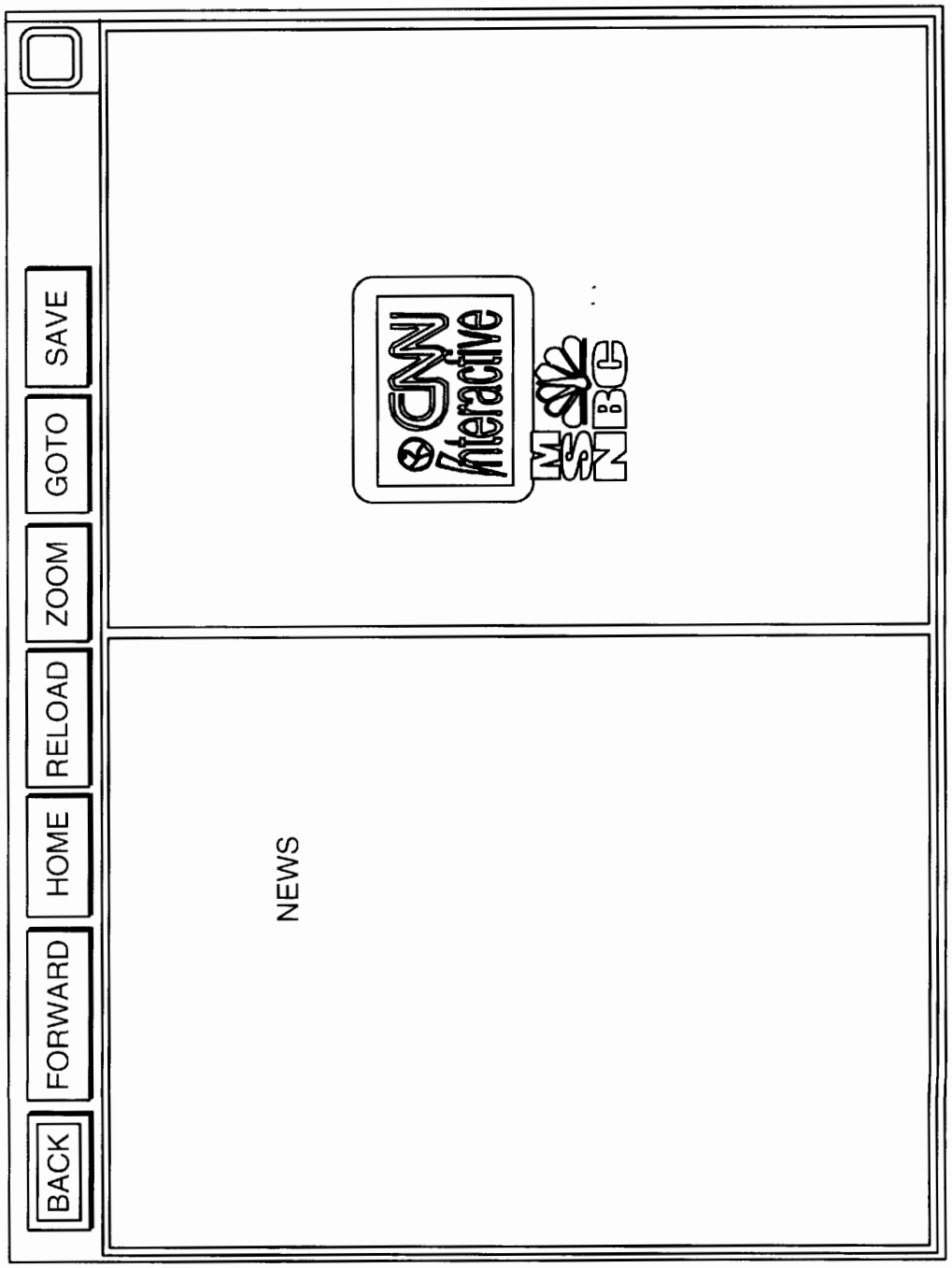

TVNGO_0002378

FIG. 8D

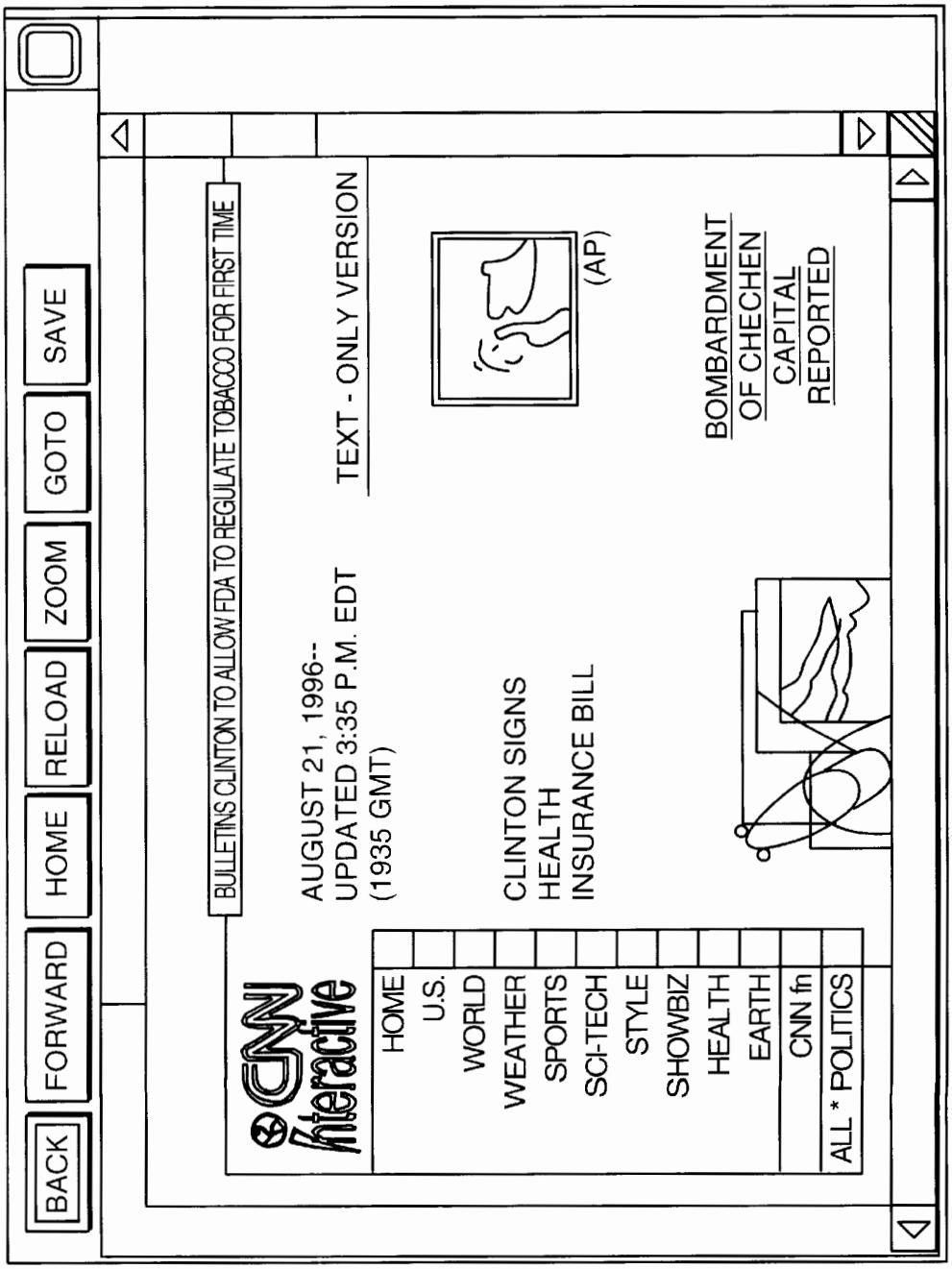
BACK
FORWARD
HOME
RELOAD
ZOOM
GOTO
SAVE
BULLETINS CLINTON TO ALLOW FDA TO REGULATE TOBACCO FOR FIRST TIME
TEXT - ONLY VERSION
AUGUST 21, 1996--
UPDATED 3:35 P.M. EDT
(1935 GMT)
(AP)
BOMBARDMENT
OF CHECHEN
CAPITAL
REPORTED
CLINTON SIGNS
HEALTH
INSURANCE BILL
CNN Interactive
HOME
U.S.
WORLD
WEATHER
SPORTS
SCI-TECH
STYLE
SHOWBIZ
HEALTH
EARTH
CNN fn
ALL * POLITICS

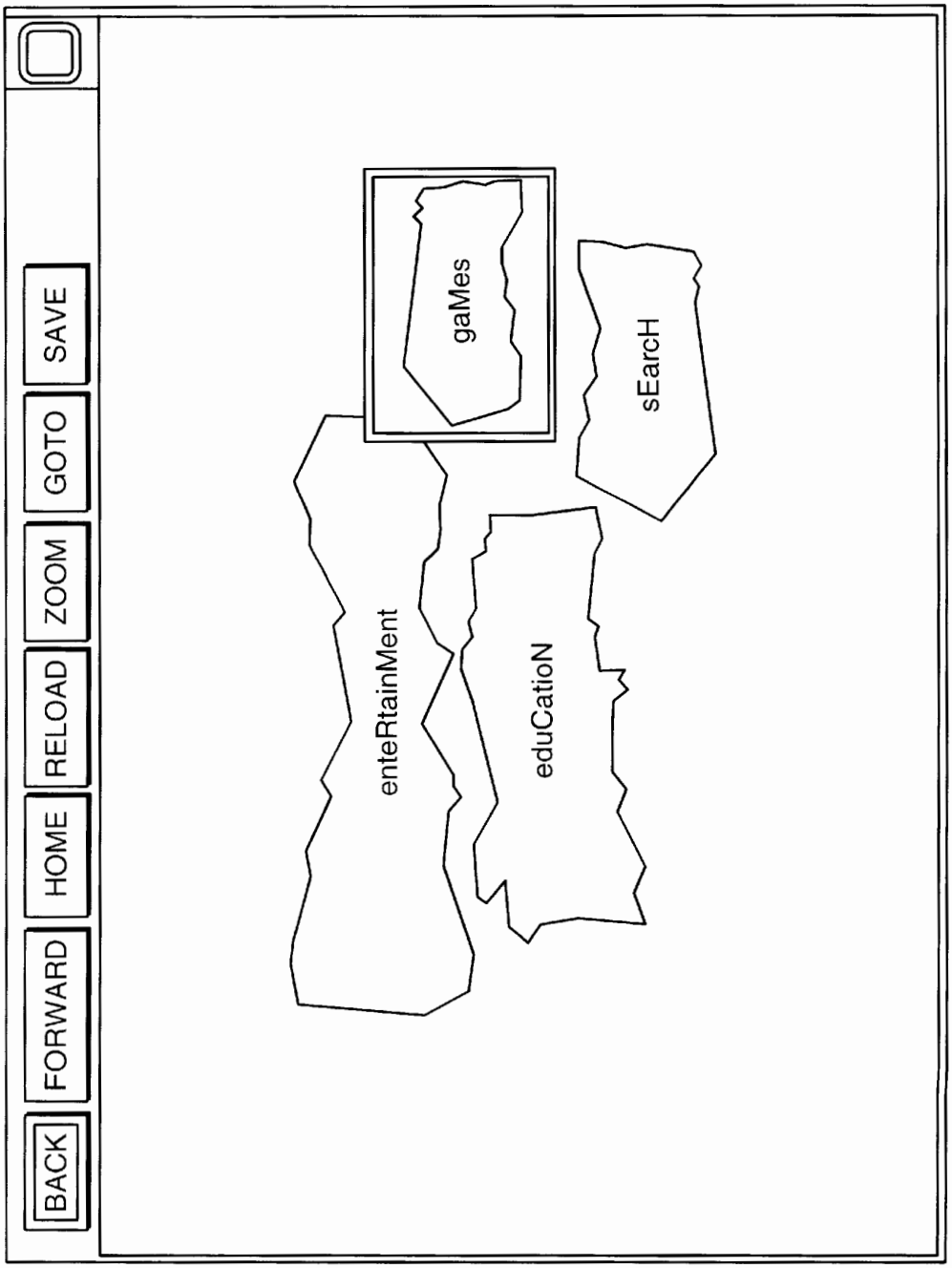
BACK
FORWARD
HOME
RELOAD
ZOOM
GOTO
SAVE
enteRtainMent
gaMes
eduCatioN
sEarcH

FIG. 8E

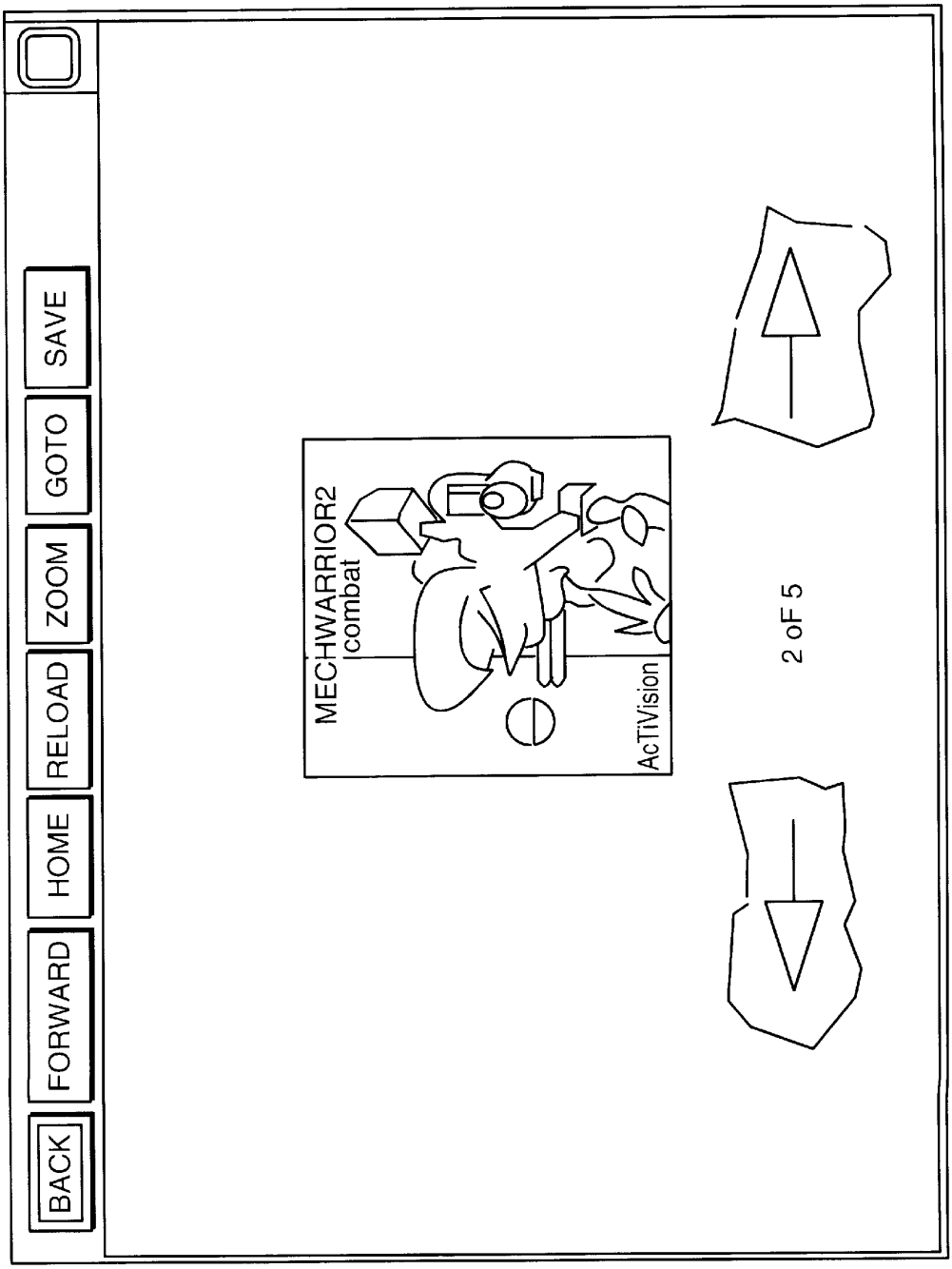

FIG. 8F

TVNGO_0002381

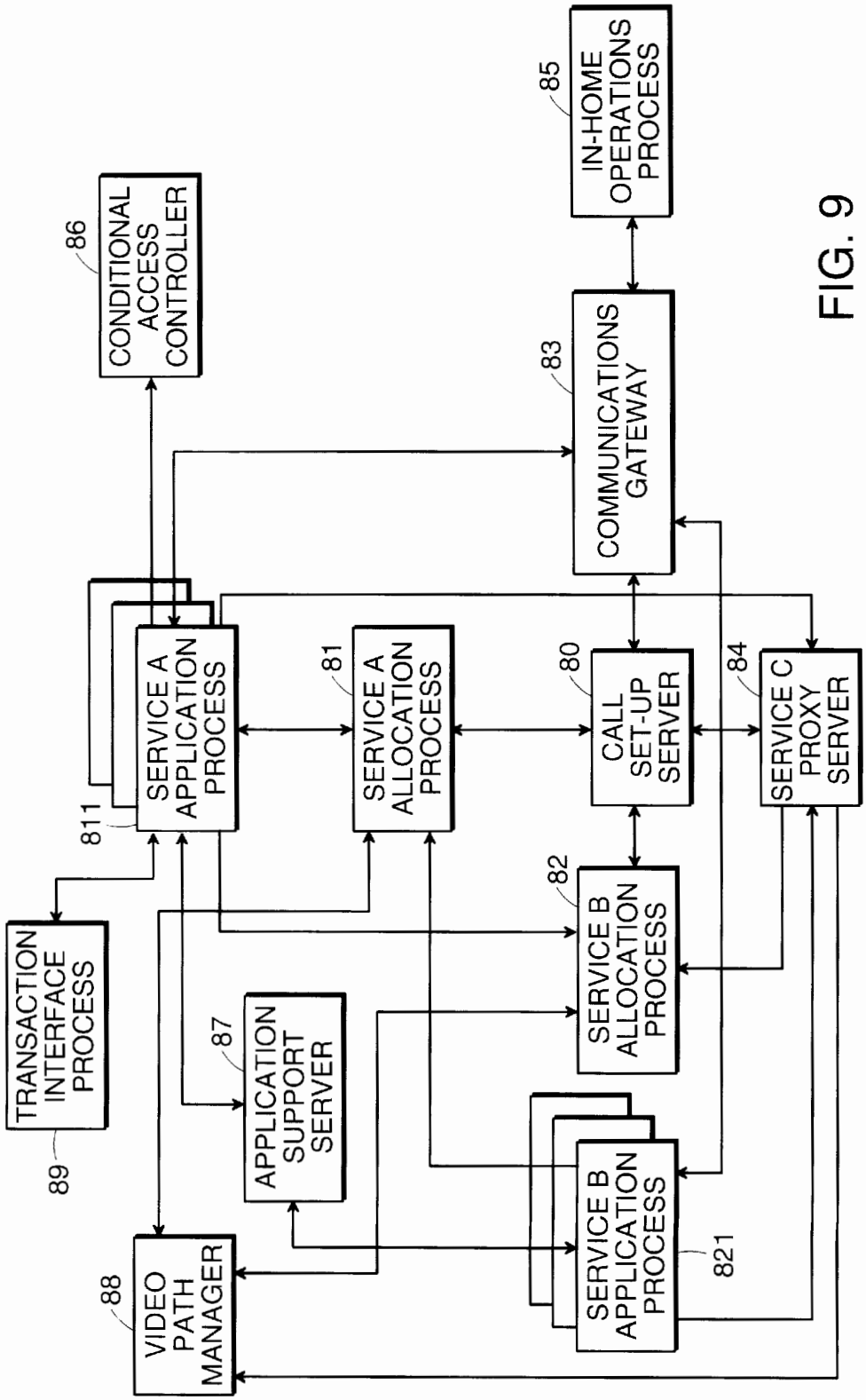

FIG. 9

TVNGO_0002382

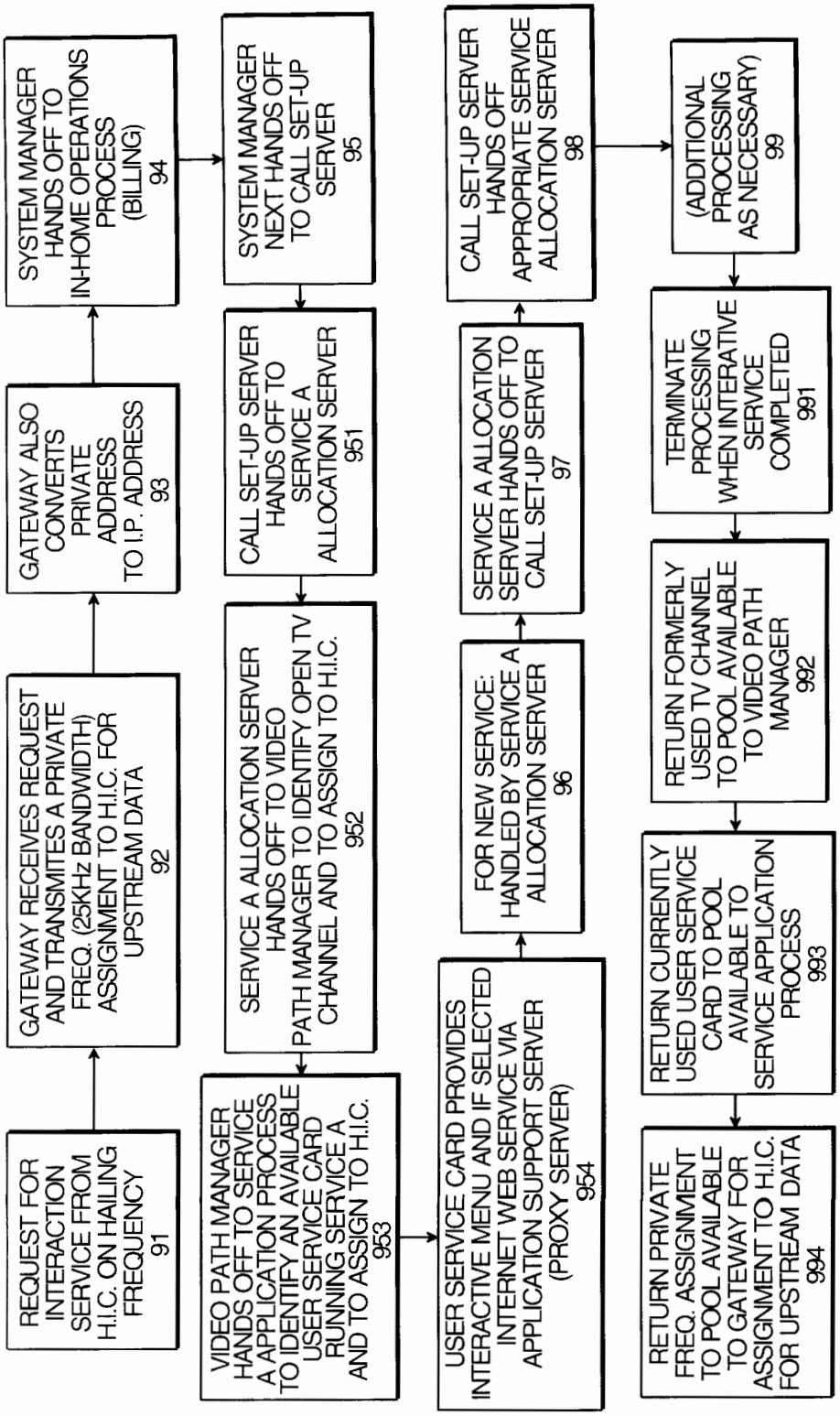

FIG. 10

TVNGO_0002383

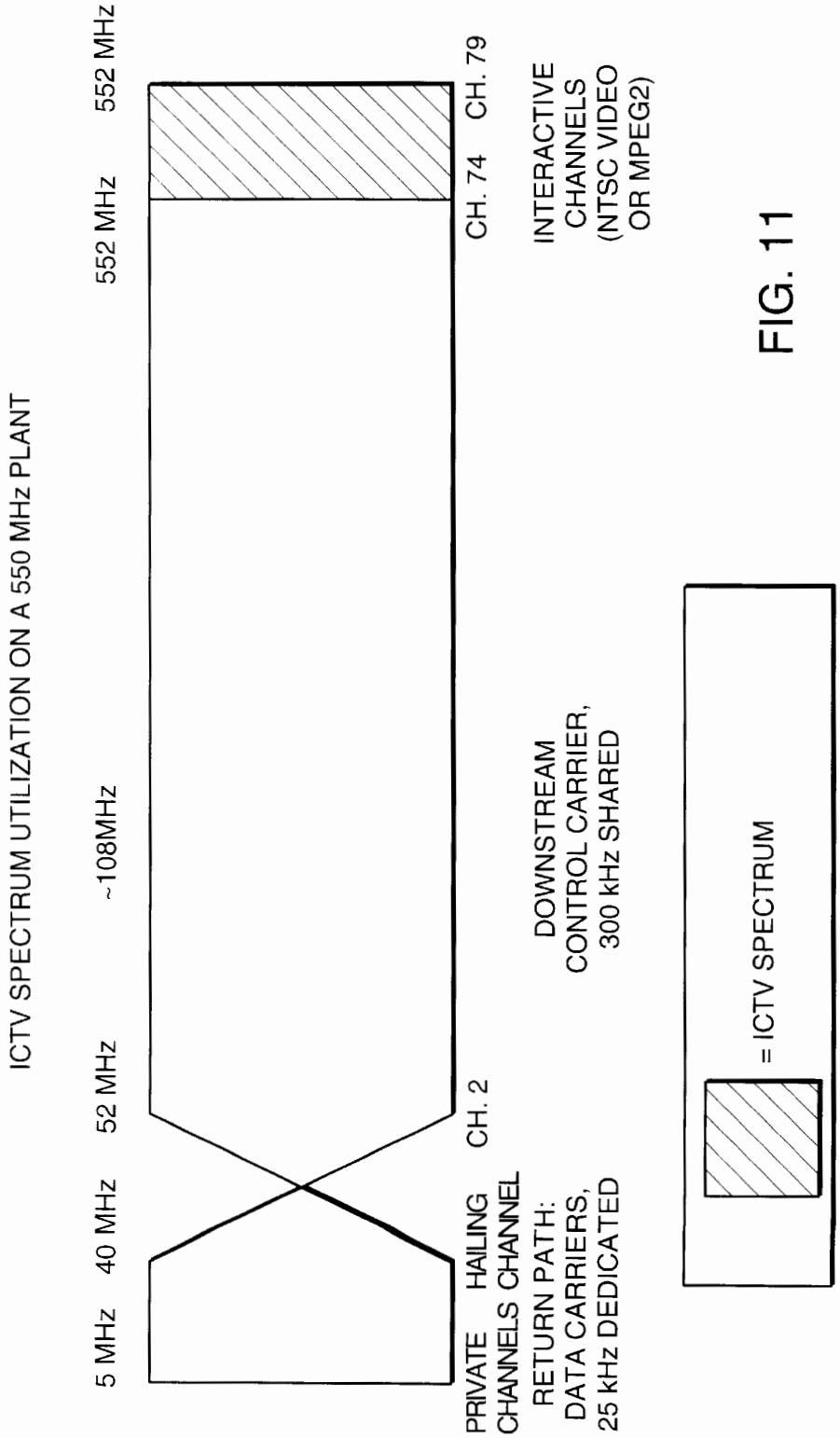

FIG. 11

TVNGO_0002384

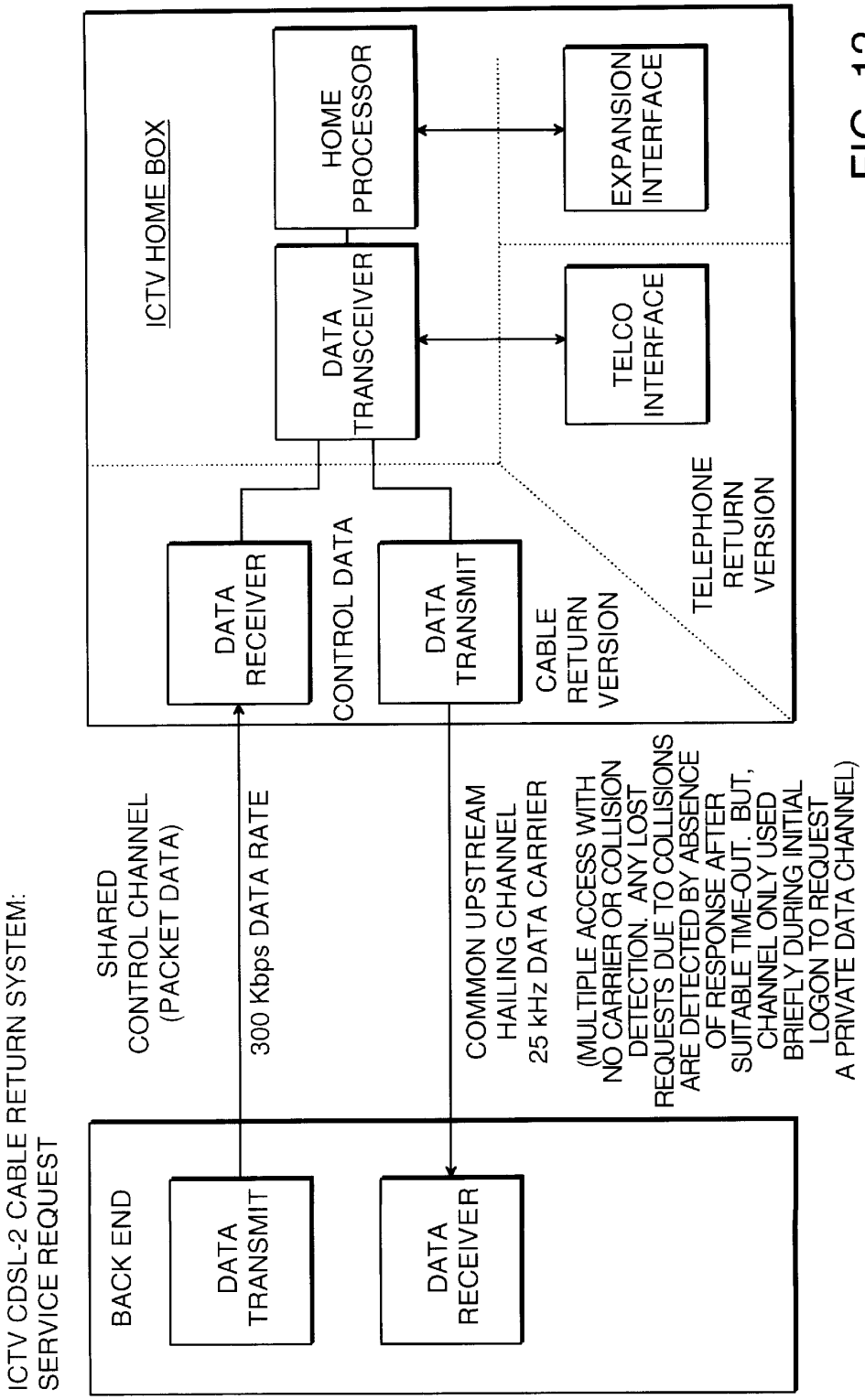

FIG. 12

TVNGO_0002385

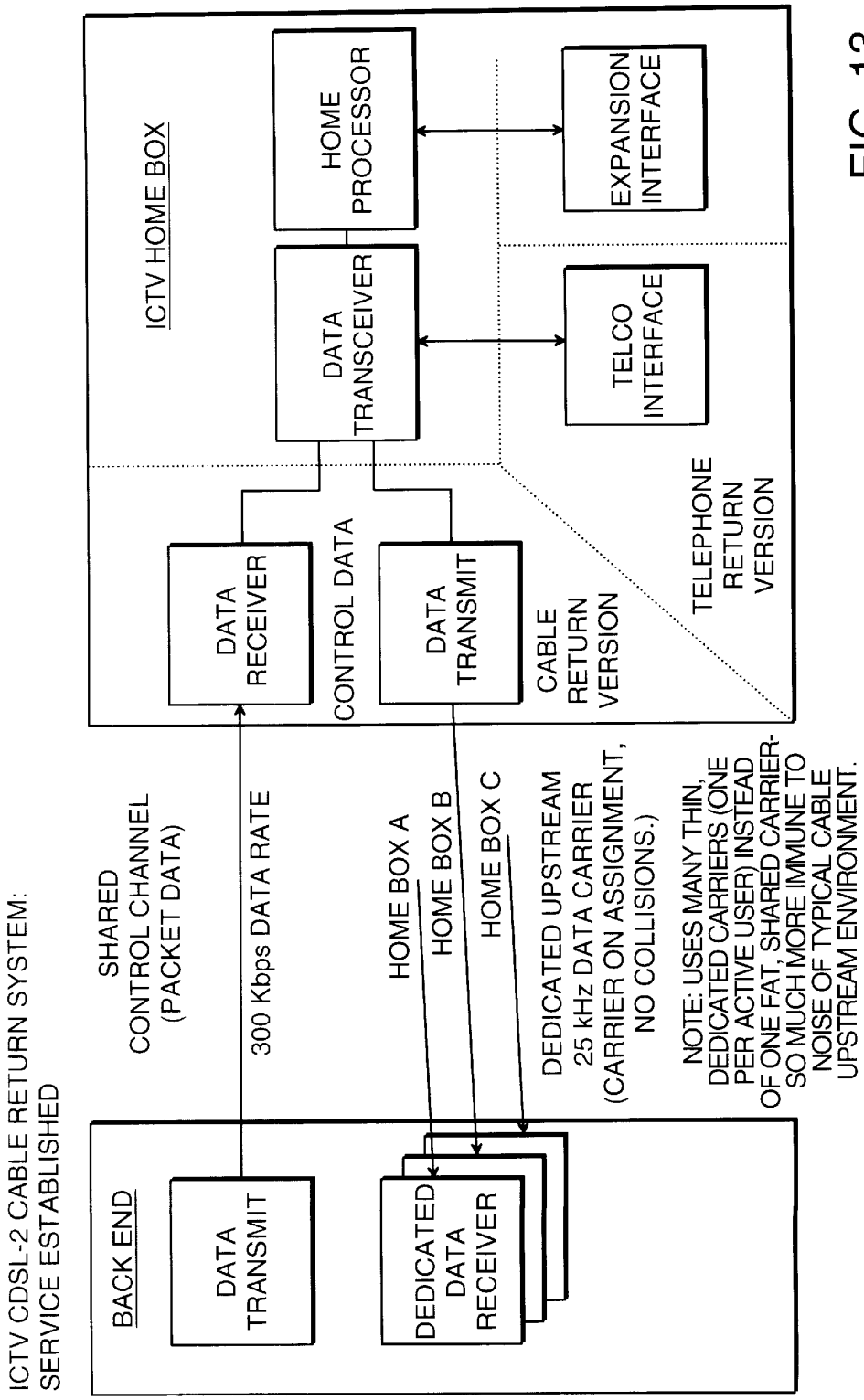

FIG. 13

TVNGO_0002386

INTERACTIVE CABLE TELEVISION SYSTEM WITH FRAME SERVER

This application claims priority from co-pending U.S. Provisional Application No. 0/067,990, filed Dec. 9, 1997, the full disclosure of which is hereby incorporated by reference herein.

FIELD OF INVENTION

This invention relates to cable television systems, particularly those providing private channels on demand to users for interactive-type services.

BACKGROUND ART

Bandwidth problems have long restricted the ability of cable television systems to provide private information services to subscribers. Such information services may include Internet access, video-on-demand, games, catalogs, etc. Private services may also include allowing the user to select from among hundreds of less popular programming that is thus made available only on a demand basis. One solution to the limits on system bandwidth has been to assign a portion of cable system bandwidth to conventional or popular channels that are universally broadcast to all subscribers. The remaining available channels are then available for assignment to requesting subscribers on a demand basis.

One such system for providing interactive services on a demand basis is described in U.S. Pat. No. 5,550,578. The full disclosure of this reference is hereby incorporated by reference herein. Basically the cable service distribution network divides the subscriber pool into various service areas, each served by a different trunk. A first group of channels broadcast to all service areas may provide conventional channels on channels 2 to 73 for example. A second group of channels, 74 to 79, for example, may be reserved for private information services. While the information on channels 2 to 73 is the same in each service area, the information on channels 74 to 79 is different in each service area. Of these channels, those that are in use are individually assigned to requesting subscribers. Subscribers receiving analog signals will use a full channel, those receiving digital signals will share the assigned channel with other subscribers on a packet addressed or time shared basis. A subscriber in one service area may be interacting on channel 74 at the same time a different subscriber in a different service area was also assigned to channel 74. The headend is equipped with the necessary processing, switching or splitting and combining systems for setting up these private channels on demand. Once assigned a channel for interactive services, the subscriber can request from any of a number of interactive services. Different interactive services may be accessed by the user requesting a different channel. For example, channels 80 to 300 can be virtual channels each of which accesses a different interactive service. As the subscriber continues to change channels among the interactive alternatives, the program being watched will change but the subscriber will remain tuned to the assigned channel for receiving interactive services. The information services can thus be provided to a subscriber over virtual channels in which the channel number changes for different interactive information services, even though the various information services may be provided over a fixed frequency input to the set top. The control data from the subscriber is set top can cause the back end to supply a different information service as the subscriber appears to be changing the channel.

In the system of U.S. Pat. No. 5,550,578, the headend includes a finite number of interactive controllers (or processors) for assignment to subscribers requesting interactive service. The interactive controllers are often dedicated to a particular type of interactive service whether it be Internet access, games, catalog shopping, movies or other service. Thus for interactive service as a whole and particularly for given types of interactive services the available resources at the headend in the form of interactive controllers is limited. It is expensive and therefore undesirable to provide a full complement of interactive controllers for each given type of interactive service for each service area.

SUMMARY OF THE INVENTION

The present invention is directed to an interactive cable system in which a frame server is included in the headend along with a plurality of assignable interactive controllers. The frame server of an embodiment of the invention interfaces with a plurality of home interface controllers. Each home interface controller is associated with a subscriber television and a subscriber selection device that permits subscriber interaction. The frame server generates display images to be supplied to the subscriber television associated with the assigned home interface controller in a digital television signal over the cable system's information service distribution network. The display images from the frame server are preferably limited to interactive pages as defined herein. The subscriber selection device of a home interface controller assigned to the frame server can communicate with the frame server through a transmitter in the home interface controller and over a data communication link. The data communication link is typically either a frequency band on the cable distribution network or the telephone lines.

The plurality of interactive controllers also at the headend each receive data communications from an assigned home interface controller. The interactive controller generates information signals to be supplied over television signals through the information service distribution network to the subscriber television of the assigned home interface controller. A system manager in the headend is in data communication with the home interface controllers so that it can assign the frame server or one of the interactive controllers to a home interface controller requesting interactive service.

The frame server advantageously accommodates a large number of subscribers requesting interactive service so that the overall demand for interactive controllers is reduced. Such a system can be cost effectively built with fewer interactive controller cards and modules than would otherwise be needed to satisfy subscriber demand for interactive services. Other objects and advantages of the present invention will become apparent during the following description of the presently preferred embodiments of the present invention taken in conjunction with the drawings.

BRIEF DESCRIPTION OF THE DRAWINGS

FIG. **1** is a block diagram of a headend for an embodiment of the present invention.

FIG. **2** is a block diagram of a back end for use in the headend of FIG. **1**.

FIG. **3** is a block diagram of a front end for use in the headend of FIG. **1** with an exploded view of an analog user service module.

FIG. **4** is a block diagram of a front end for use in the headend of FIG. **1** with an exploded view of a digital user service module.

FIG. **5** is a block diagram of a frame server for use in the headend of FIG. **1**.

FIG. **6** is a block diagram of a switching output RF hub for use with the headend of FIG. **1**.

FIG. **7** is a block diagram of a home interface controller for use in connection with the headend of FIG. **1**.

FIGS. **8**A–**8**F illustrate examples of subscriber television screen displays during an interactive session.

FIG. **9** illustrates a system diagram of a system manager for use in the headend of FIG. **1**.

FIG. **10** is a flow diagram for a call set-up and tear down procedure for use by the system manager of FIG. **9**.

FIG. **11** illustrates the frequency spectrum of the various signals used by a cable television system incorporating the headend of FIG. **1**.

FIG. **12** is a high-level diagram of a home interface controller in communication with the back end.

FIG. **13** is a high-level diagram illustrating a cable return system.

DETAILED DESCRIPTION OF SPECIFIC EMBODIMENTS

For the purposes of the description herein and the claims that follow it, unless the context otherwise requires, the terms "cable television environment" and "cable television system" include all integrated systems for delivery of any information service to subscribers for use in connection with their televisions. These include conventional cable television systems utilizing coaxial cable for distribution primarily of broadcast and paid television programming, cable television systems using fiber optics and mixed fiber optic-coaxial cable, as well as other means for distribution of information services to subscribers. Similarly, unless the context otherwise requires, the term "information service" includes any service capable of being furnished to a television viewer having an interface permitting (but not necessarily requiring) interaction with a facility of the cable provider, including but not limited to an interactive information service, video on demand, Internet access, local origination service, community event service, regular broadcast service, etc. "Television communication" means providing an information service via a television information signal. A "television information signal" is any signal that may be utilized by a television for video display, regardless of the form, including a standard NTSC-modulated rf carrier, an MPEG-compressed digital data stream, or any other format. "Interactive television service" means an information service that utilizes an interface affording two-way communication with a facility of the cable provider. When a home interface controller is said to be in an "interactive mode," it means that the interactive television information system is providing an information service to the home interface controller. "Interactive pages" are defined herein to include still video frame images or a multimedia short script for interpretation by a local process such as a typical page of HTML data as practiced by conventional web browsers. Thus the interactive page may show cursor movement or flashing or revolving images under local process control. An interactive page is typically sent intermittently from the frame server. It does not require the frame server to continually send video information multiple times a second.

A cable television system comprises a headend and distribution plant. The cable distribution plant includes a cable distribution network having bridger amplifiers, feeders, feeder amplifiers, and cable drops serving homes.

Referring now to FIG. **1**, a headend is illustrated for providing interactive services. The headend includes back end **11**, front end **12**, and switching output RF hub **13**. Data communication from subscribers is delivered thru a return data path to the back end **11** of the headend. One alternative return path is through telephone lines to telephone return path processing block **101**. Another alternative return path is through a reserved frequency band throughout the cable network. For example, the 5–40 MHZ band may be reserved for data communication from subscribers to the headend. Cable return path processing block **102** is in communication with such signals provided over a cable return path. Telephone return path processing **101** and cable return path processing **102** are connected through return path switches **103** with user service cards **202** and frame server **206**. The user service cards **202** each contain a processor that acts as an interactive controller which is individually assignable to a requesting subscriber on a demand basis. The interactive controller receives the data from its assigned subscriber and produces the information to be delivered to the subscriber in a television signal. The frame server **206** is one or more processors which interface with a plurality of subscribers. Processes running on the frame server **206** may be individually assigned to subscribers or may handle interactions with a plurality of requesting subscribers. Each interactive process on the frame server **206** responds to data from a subscriber and produces the information to be delivered to the subscriber in the form of a television signal.

The back end **11** further provides information sources to the front end **12**. A network interface **104** is in communication with an Internet service provider. Back end switches **105** are in communication with the network interface **104** and web and application server CPU's **106** as well as system management CPUs **113**. Communications are completed with the front end **12** through back end switches **105** via distribution switches **201**. Because the user service cards in a preferred embodiment are diskless and lack ROM with stored software necessary for bootup, server **106** may also provide booting-up for the interactive controllers Also, server **106** provides a web proxy server function so that information downloaded from a remote server on the Internet is quickly cached on server **106**.

Distribution switches **201** provide communication signals and control signals to the user service cards **202**, the frame server **206**, MPEG to video decoder cards **208** and MPEG**2** pass thru **209**. MPEG and MPEG**2** digital encoding schemes are referred to herein by example only. Those of ordinary skill in the art should readily recognize that the present invention may be practiced with other currently available and later developed schemes for delivering video information through digital signals. The user service cards may be dedicated to any of a variety of interactive services. For example, there may be Internet service cards for running web browser processes and other video game player cards for running video game processes. The MPEG-to-video decoder cards **208** and the MPEG**2** pass thru **209** are for providing video to subscribers on demand.

NTSC/PAL TV modulator cards **203** provide analog television signals from the outputs of the user service cards **202**. The television signals are in the form of NTSC or PAL IF (intermediate frequency) signals. NTSC/PAL TV modulator cards **210** are also provided for providing video on demand on analog signals. The analog signals from the user card chassis NTSC/PAL TV modulators **203** and the video on demand NTSCIPAL TV modulators **210** are provided to initial RF processing **301** and **303**, respectively, in the switching output RF hub **13**. The initial RF processing

includes upconverting the NTSC/PAL IF carrier signals onto a frequency determined by the channel frequency assigned to the subscriber destination. Channel assignment and control of any adjustable upconverters is handled by system management CPUs **113** which are in communication with the switching output RF hub **13** through communication lines not shown. In a presently preferred embodiment, a user service card **202**, an NTSCIPAL modulator **203** and an upconverter may all be packaged in a single module. The module as a whole would be assigned to a requesting subscriber.

MPEG**2** real time encoders **204** provide digital television signals from the outputs of the user service cards **202**. The frame server **206** includes an MPEG encoder to provide digital television signals as well. Videos may be stored in MPEG format and may therefor use pass thru **209** to directly provide digital television signals. The digital signals are combined into a composite **64**QAM (quadrature amplitude modulation) signal before going to initial RF processing. The digital signals are multiplexed so that many different signals may be carried on a single analog carrier. Multiplexer and **64**QAM encoder **205** receives signals from the user chassis' MPEG**2** real time encoders **204**. Multiplexer and **64**QAM encoder **207** receives signals from the frame server **206**. **64**QAM encoder **211** handles the video signals from the video on demand chassis. Within switching output RF hub **13**, initial RF processing **301**, **302**, **303** is performed in which there is one RF module per simultaneous user. The output of RF processing **301**,**302**,**303** is switched for delivery to the service area of each respective subscriber destination and all signals going to a particular service area are combined via switcher-combiner **304**. The combined signals for each service area pass through a final RF processing **305**.

An embodiment of back end **11** is shown in more detail in FIG. **2**. Cable return path processing **102** is provided by a bank of RF modems **102***b*. Splitters **102***a* extract cable signals for processing by the RF modems **102***b*. Telephone return path processing **101** is provided through the public service telephone network **101***a* to an integrated channel bank and modem **101***b*. Network interface **104** is provided by router firewall **105***b* and CSU/DSU (customer service unit/data service unit) **105***a*. Router firewall **105***b* is in communication with Ethernet switch **108**. Also shown in FIG. **2** are web proxy and application server **107**, system manager **108**, network manager **109** and commerce manager **110** in communication with Ethernet switch **108**. System manager **108** provides for the allocation of resources to permit interactive services with a user, as well as procedures for call set-up and tear down. Commerce manager **110** manages real-time transactions and converts billing to a batch format for handling by legacy systems. Also shown in FIG. **2** are operations console **111** and boot server **112** in communication with Ethernet switch **108**.

An embodiment of front end **12** is shown in FIGS. **3** and **4**. The user service cards are preferably each housed in a single user service module **212**. Ethernet switches **201** are connected to the user service modules **212**. The composition of the user service modules depend on whether they are to be used for analog or digital video signal processing. Arrangement of a preferred analog user service control module **212***a* is illustrated in FIG. **3**. A return path interface **202***e* receives data signals from an assigned subscriber. A LAN interface **202***f* enables data communications between the user service card and the headend network accessed through the distribution data switches **201**. This gives the user service card **202***a* access to various information sources and to the system management CPUs **113**. The interactive controller is found preferably in a PC card **202***a* which is a personal computer on a single board. The NTSC/PAL TV modulator **203** includes a VGA to NTSCIPAL converter **203***a*, a scrambler **203***b* and an RF modulator **203***c*. The scrambler **203***b* can be a complete conventional scrambler providing in addition to a scrambled television signal output, a signal authorization for data transmission to the assigned subscriber to allow descrambling at the subscriber's set top. Alternatively and preferably, the scrambler **203***b* is a simplified scrambling unit that performs sync suppression to scramble the signal and is provided with a conditional access code (tag) for insertion into the scrambled signal. In such a system, a separate scrambler including an encrypter, an encoder and an access controller is provided in the front end **11** for each channel frequency. The access controller sends the signal authorization to each subscriber assigned to the channel frequency in any of the service areas. The signal authorization will typically include a key for decrypting the conditional access code. The encrypter encrypts the conditional access code. The encoder places the conditional access code into a scrambled reference video signal. An extractor in the separate scrambler for the given channel frequency removes the conditional access code from the reference and communicates it to each interactive control module active at the given channel frequency. The interactive control module provides a path for the conditional access code into the video scrambler **203***b* where it is inserted into the scrambled signal. The conditional access code may be inserted into the vertical blanking interval (VBI) or the audio subcarrier depending upon the desired system design. This scrambling system is described in copending U.S. Provisional application No. 60/067,990 in a portion entitled "Distributed Scrambling Method and System". The full disclosure of the copending provisional patent application has been incorporated by reference herein. The RF modulator **203***c* may include an IF signal that is modulated by the scrambled television signal to produce for example a 45MHz IF carrier for the scrambled television signal. It has also been found convenient to include the initial RF processing **301** in the analog user service control module **212***a*. This involves including an RF upconverter for receiving the modulated IF carrier and raising the carrier to a frequency determined by the assigned channel frequency.

FIG. **4** illustrates a digital user service control module **212***b*. It can be seen that the digital user service control module **212***b* is similar to the analog user service control module **212***a* as for the data input interfaces and the use of a PC card to act as the interactive controller. In the digital control module **212***b*, the information signal from the PC card **202***a* is provided to a VGA to YUV converter **204***a*. The digital YUV output is encoded. The presently preferred encoder is an MPEG**2** video encoder **204***b* and an associated MPEG**2** audio encoder **204***c*. The encoded digital television signal is input to a first stage of an MPEG**2** multiplexer **204***d*. To the extent the cable system is also used to handle print requests from subscribers, printer output can be sent from the PC card **202***a* to the first stage of the MPEG**2** multiplexer. The printer output would ultimately be directed through the cable system to a settop and a printer connected to the settop. All outputs from the first stage MPEG**2** multiplexers **204***d* are passed to the multiplexer and **64**QAM encoder **205**. This includes Ethernet Switch **205***a*, MPEG**2** Re-Multiplexer **205***b* and **64**QAM encoder **205***c*. The **64**QAM encoder **205***c* produces a 45MHz IF signal which can then be upconverted in initial RF processing **301**.

In accordance with an embodiment of the present invention, a frame server **206** is advantageously included in

the headend. The frame server **206** is one or more computers for running numerous processes, each interacting with one or more assigned subscribers. Typically, it is expected that the frame server would be used for providing primarily interactive pages. The frame server will typically provide initial service to a requesting subscriber, for example, for logging on and establishing initial service. The frame server can also be effectively used to deliver email messages, informational messages such as sports scores, transit schedules, weather, stock prices and other still frame oriented content. Other services can include Internet web browsing, catalog shopping, and electronic program guides. The inclusion of a frame server significantly reduces user demand for user service cards and thus holds down the overall cost of headend equipment. Rather than requiring a user service card for every subscriber that activates the interactive mode, the frame server allows many subscribers to receive interactive service without connection to a user service card. Indeed, the frame server is intended to provide an application source that is always available to respond to user interactions. Thus the system does not block but can always respond to an arbitrarily larger number of users albeit one frame at a time.

A subscriber interacts with a particular application within the frame server environment. The resulting outputs from the application are captured one display frame at a time and converted to the MPEG**2** or other suitable format. After conversion, the frame is transmitted to the user for decoding and display on the user's television set. The frame server uses one digital channel on a cable television or other broadband system. All subscribers accessing the frame server connect to the common channel. A frame of video representing the output of the software application with which the subscriber is interacting is uniquely addressed to that subscriber and transmitted over the common channel, much as all packet switched networks operate. Only the digital settop terminal to which the frame of video is addressed will decode the frame. It is expected that a subscriber interacting with a frame server application will receive requested interactive pages in less than two seconds from the subscriber's request.

Referring now to FIG. **5**, the frame server **206** will be described in greater detail. The frame server system will typically operate as a collection of individual software processes that run on a single computer for small system use. The frame server can be scaled to run on a networked cluster of computers acting in concert. The frame server **206** includes a plurality of information servers. These may include a web server **206***b,* a mail server **206***c,* a news server **206***d* and a message server **206***e.* Each information server provides its own particular class of information. Locally generated messages are created by the message page generator **206***f* which provides those pages to the message server **206***e.* A cluster of message servers assist in the generation of pages of information and cover various message types including in the presently preferred embodiment a customer service message server **206***g,* a help and error message server **206***g*' and a third-party message server **206***g*". The third-party message server encompasses such content as local advertiser messages.

Regardless of server source, the message pages (video frames) are presented by the various respective servers to the user web browser **206***h.* All messages are created using HTML protocol so that regardless of source, the information is rendered via a web browser process **206***h.* The subscriber interacts with a web browser process via a return path processor **206***q* and request scheduler **206***r.* The return path processor receives user keyboard and pointer (mouse) commands from subscribers via the return path switch **103**. The received user commands are processed by the return path processor **206***q* and passed to the request scheduler **206***r* for routing to the web browser process **206***h* handling a given user. The web browser establishes a state machine that tracks the user's inputs and generates requests to the appropriate server source.

Each active web browser process **206***h* renders an image in RAM from HTML source received from a particular server. The rendered output is then passed to an RGB to YUV display driver **206***j* which converts the program generated display information from the standard RGB format to YUV which is the input format used by MPEG**2** compression systems. This YUV rendered display from is stored in a user virtual display memory **206***k.* A multiplexer, referred to herein as a user encoder queue manager **206***m,* sequences the multiple user display pages through a FIFO to queue up for the MPEG**2** I-frame encoder **206***n* for MPEG compression. The compressed signals are eventually transmitted to the respective subscriber via MPEG frame addressing **206***p* which provides addressing and system information appropriate to the digital settop in use by the system. The resulting data stream, including various user display frames, is routed into the switching output RF hub for distribution to the requesting subscribers.

An embodiment of switching output RF hub **13** is shown in FIG. **6**. Initial RF processing is performed by RF up-converters **301**, converting 45 MHZ input to an output in the range of 150 to 300 MHZ. The upconverters are preferably capable of modulating a carrier that is tunable under control of the system management CPUs **113**, so that any given upconverter may be configured to best handle demands placed on the system. RF switch and combiner network **304** provides the upconverted signals to final RF processing **305**, which in FIG. **6** are indicated by block channel converters **305***a* and amplifiers **306**. There is one block channel converter **305***a* for each service area. The interactive signals for delivery to a service area are combined with broadcast channels that are identically transmitted to all service areas. FIG. **6** illustrates this for one of the service areas where combiner **307** is shown. An optical transmitter **308** is used for sending the combined signals out over optical fiber.

Each subscriber of the system is equipped with a home interface controller **401** through which all interaction is conducted with the headend. Preferably, the home interface controller both receives the television signals from the cable and conducts data communication. However, the data communications could be handled by a separate box connected to a phone line, if desired. A presently preferred home interface controller **401** is shown in FIG. **7**. A cable carrying the television signals from the subscriber's service area is connected to a two-way splitter **402** which may also be connected to a cable set-top **403** provided by a third party. A diplex filter and combiner **404** provide a first frequency path to splitter **405** and a second frequency path to FSK (frequency shift-key) radio **415**, where the first frequency path occupies a higher spectral region than the second frequency path. The first frequency path provides a downstream path for signals going from front end **12** to the user of the home interface controller whereas the second frequency path provides an upstream path for signals going from the user to front end **12**. An alternate upstream path may be provided through telephone lines via a telephone interface **413**.

Splitter **405** provides a signal path to low pass filter **406** and an impairment removal circuit **417**. The outputs of the

low pass filter **406** and the impairment removal circuit **417** are re-combined at combiner **407**, then amplified by amplifier **408**. Switch **409** allows the user of the home interface controller **401** to switch between the signal output of amplifier **408** and the output of the third party set-top **403** (if present). Switch **409** may also be under control of home box CPU **410**.

Home box CPU **410** provides control and communication signals to impairment removal circuit **417**, FSK upstream radio **415**, telephone interface **413**, serial port **414** and infrared transmitter **412**. FSK upstream radio **415** is a modulator for providing a data communication link through a low frequency band on the cable between the home interface controller **401** and front end **12**. Collectively, the upstream radio **415** and downstream radio **416** constitute the transmitter and receiver, respectively, of a data transceiver. In addition to or instead of the FSK upstream radio **415**, telephone interface **413** can be used to provide communication over ordinary telephone lines to the front end **12**. Infrared transmitter **412** may be used to communicate with the cable set-top **403** or the television. For example, when interactive mode is requested, the infrared transmitter can transmit the assigned frequency to the set-top or television tuning the appropriate appliance to receive the interactive television display. The frequency is learned by the CPU **410** through the downstream radio in communications from the headend. Infrared receiver **411** receives commands from a subscriber selection device. The subscriber selection device may be a typical television remote control or may include a keyboard, a mouse or other input device. The subscriber will have a channel selection input available for selecting a program on at least one of the available selection devices.

A serial port **414** may be advantageously included on the home interface controller to provide communication with a printer for hard copy printouts. The serial port enables the subscriber to connect a printer to the home interface controller. When a subscriber is using the interactive system to browse the Internet, read email, review advertisements or other still frame viewing, a print command can be used to obtain a printout of information. When the print command is received by an assigned interactive controller at the headend such as in digital control module **212***b,* the output to the subscriber can be changed to a printer output which the home interface controller receives and passes along through the serial port to the attached printer.

It is contemplated that households having printers, generally have them attached to their home computer. Such persons may be unwilling to purchase an additional printer for their interactive television system or to move their printer from the computer to the television. The interactive system described herein may be used to create a virtual local area network. An additional home interface controller may be installed in the home for connection to the printer. The television cable into the home may be connected to this home interface controller in addition to connection with the home interface controller of the television. A subscriber operating in interactive mode and viewing a television screen may activate a print command by clicking a mouse with a cursor on the screen over a print icon, by simply keying in a print command or other input method. The application at the headend communicating with the subscriber will ask the subscriber to which home interface controller should the print output be sent. The destination for print output can be preentered as a default, set up early in an interactive session or entered when printing is desired. When the print command and destination are received at the headend, the printer output from the application can be addressed to the destination home interface controller instead of the requesting home interface controller. When printing is complete, the application can return to interacting with its assigned requesting home interface controller. In accordance with this method of operation, the destination home interface controller can be anywhere on the cable distribution network. Thus a user can cause a print out at an office printer, a relative's printer or indeed any printer the user can identify. For the user at home, printing through a printer at home it may seem that the print command is causing a transfer of the screen being viewed on television directly to the printer in another room. In reality, the print command will travel up to the headend causing the headend to deliver the print output down through the cable to the designated home interface controller with an attached printer. The home interface controller will need to always be listening to a data communication link or to the frame server common channel so as to recognize and receive information addressed to itself.

When a user of the home interface controller requests an interactive service from head end **12**, such as Internet service or a video game, an appropriate frame server application or user service module is placed in use for providing the service to the user. The user selects the desired service by using the subscriber selection device in conjunction with the home interface controller. Examples of screen displays available to the user for selection of a service are illustrated in FIGS. **8**A–**8**F. FIG. **8**A shows a beginning display, in which front end **12** requests appropriate information from the user, including a PIN code number. In this way, for example, children may be blocked from requesting unsuitable video content. Once the back end **11** identifies the user (this will be discussed in more detail later), various options are available, as shown in FIG. **8**B. FIG. **8**C shows a screen in which the "news" option of FIG. **8**B has been chosen. In FIG. **8**C, once the user has decided to choose a news program, the user may decide to choose CNN or MSNBC. FIG. **8**D shows the screen when the user has selected the CNN option of FIG. **8**C. FIG. **8**E is similar to FIG. **8**B, except that this screen appears when the "Junior" button and appropriate PIN code is entered in FIG. **8**A. FIG. **8**E shows the screen that results when the "gaMes" button in FIG. **8**E is entered. It should be noted that the interaction here is via an Internet-type browser, which permits not merely surfing the Internet, but actually selecting different information services using hyperlinks.

FIG. **9** illustrates a system diagram for system manager **108**, indicating the two functions of (1) call set-up and tear down and (2) resource allocation with the interactive TV system of FIG. **1**. Call set-up is the process of causing the assignment of a television information signal path to the home interface controller for interactive service, and resource allocation is the process of assigning appropriate user service cards and virtual circuits within the switching system in the back end.

Call set-up is initiated by a small program in the home interface controller which keeps track of the channel the user is watching. The channels are broken into bands where, for instance, channels 2 through 73 are assigned regular TV programming both off-air TV channels as well as cable channels such as MTV, HBO, CNN, etc. The band above this broadcast band uses channels 74 to 79, for instance, for interactive services where a user is assigned one of these channels only during the duration of that user's interaction with the interactive TV system (i.e. - while looking up a restaurant in the entertainment guide, or while watching a movie, etc.). A user may tune from a broadcast channel

(e.g.—ch. 37 CNN) to an interactive service virtual channel, at which time the user will be provided with the screen displays of the type shown, for example, in FIGS. **8**A through **8**F. When the user selects interactive service, the small program in the home interface controller sends a signal to the system manager at the back end to initiate call set-up.

The system manager in back end **11** begins the call set-up process through a system manager subsystem called the call setup server (CSS) **80**. The CSS **80** finds a free interactive element or selection element corresponding to the virtual channel number the user is trying to tune to. As an example, assume the user is interested in movie previews which are viewed through interacting with a user service card and a program run on service "A" application process **811**. The CSS **80** will call a video path manager subroutine to check for an available television information channel within the band of television information signals allocated to provide interactive service to the neighborhood of the requesting user. The newly assigned television information signal of the requesting user and the user's network address is passed to a service allocation server (SAS) **81** associated with the application process.

Assuming a non-blocked call, the system management function has now passed from the CSS **80** sub-system to the SAS **81** (for this example). The CSS **80** is now out of the loop. The SAS **81** checks for a free resource, i.e., a processor for running a service application process. If one is available, control is passed to it along with the assigned television information signal and address of the calling user. The processor, in this example, is a user service PC card **202***a*. The service application process run by the PC card **202***a* sends a request to the application support server **87** for subscriber information to authenticate the user id for the neighborhood from which the signal is originating. The service application process also requests subscriber information from the application support server **87** customer database to check for paid-up service and/or access to service permission (e.g.—used to block children from viewing R rated movie previews, for one example). Upon success, the service application process directs the conditional access controller (CAC) **86** to send a descramble key code to the user's set-top converter to allow it to descramble the video signal that the service application process will be using. The service application process also communicates directly with the in-home operations process (IHOP) **85** running in the home interface controller CPU **410**, informing the program of the assigned television information signal. A separate processor in the set-top receives the descrambling authorization keys and translates them.

The set-top IHOP **85**, upon receiving the assigned channel, tunes the cable TV settop to the assigned channel. The user will see the output of the SAP **811** and can begin using the remote control to manipulate the program running on the SAP **811**. The in-home operation process **85** transmits appropriate remote control commands addressed to the processor/process assigned to it. When the user tunes to a broadcast TV channel, the call take down process is initiated by the set-top system manager extension signaling the **811** that the user has tuned away, and, after a time-out period (for instance, five minutes), the **811** signals the call set-up server **80** to release the interactive virtual channel previously assigned. The virtual channel is logged back into the free channels list by the CSS **80**. At the same time, the SAP **811** signals the SAS **81** that it is now a free resource and the SAS places the user service card that had provided the application process on its free card list.

The example above is the same for other kinds of user service cards for interactive multimedia, such as video game player cards, and MPEG-to-video decoder cards **208**. A user service card can be used for a front end application such as movie previewing and purchasing. When the user picks a movie using a user service card, the user service card will then pass control of the user to a control program that manages movie playback and decompression (MPEG**2** to NTSC). When the movie is over, the movie playback control program follows the same steps of call take down as the user service card did.

The above system management scheme can accommodate any number of diverse services in a fully distributed manner such that there are no bottlenecks in the system. This affords optimal performance in response to user requests. By distributing the processing of communications with home interface controllers throughout system management, a greater amount of processing can be conducted in less time with less expensive processing units.

System management may include separate service allocation servers **81** or **82** for each of the video on demand system, the digital user service cards and the analog user service cards. Moreover, there may be additional service allocation servers further dividing the user service cards into groups according to the type of interactive service provided. Thus, there may be a service allocation server for movies only, for games, and for catalogs. The service allocation servers act as intermediaries between the call set-up server and the video provider elements whether they be analog user service cards, digital user service cards, frame server web browser applications **206***h* or MPEG-to-video decoder cards **208**. The service allocation servers provide distributed management. The call set-up server **80** can pass the call set-up to the appropriate service allocation server. As the service allocation server identifies a video provider element and completes the connection with the home interface controller, the call set up server can be attending to the next caller.

The communications gateway **83** acts as a translator between the IHOP **85** and the back end **11** LAN connecting the distributed processes of the system manager. The communications gateway **83** translates the IHOP address from an individual user into a global Internet Protocol (IP) address for addressing ethernet data packets within the back end LAN. IP is part of TCP/IP. Communications are directed from the communications gateway **83** to the application process directly. Once the service allocation server assigned to a home interface controller has put the home interface controller in communication with the requested application process, the communications can be handled directly. System management is also required to maintain administrative tasks such as billing. Each of the service application processes is in communication with a transaction interface process so that billing and credit and other financial matters can be taken care of.

FIG. **10** illustrates a flow diagram for a call set-up and tear down procedure as shown in FIG. **9**. In FIG. **10**, step **91** indicates that a request for an interactive service from a home interface controller is made on a hailing frequency. The hailing frequency need only occupy a relatively small bandwidth at a relatively low carrier frequency (compared to ordinary television signals). In step **92**, the gateway receives the request from the user and transmits a private frequency (approximately 25 kHz bandwidth) assignment to the home interface controller to be used for upstream data. Instead of a private frequency, the gateway may transmit the frame server common channel or this channel may be a default initial channel without need for notification. In step **93**, the

gateway also converts the private address to an IP address, as discussed in relation to FIG. **9**. In step **95**, the system manager hands off to the call set-up server, and in step **951**, the call set-up server hands off to the service A (for example) allocation server. In step **952**, the service allocation server hands off to the video path manager to identify an open TV channel to assign to the home interface controller. In step **953**, the video path manager hands off to service A application process to identify an available user service card to run service process A and to assign to the home interface controller requesting the requested service. In step **954**, the assigned user service card provides an interactive menu and, if selected, Internet Web service is provided via an application support server (proxy server). Step **96** indicates that a newly requested service is handled by service A allocation server. If a new service is requested, then in step **97** the service A allocation server hands off to the call set-up server, and in step **98** the call set-up server hands off to the appropriate service allocation server. Step **99** indicates that additional processing maybe necessary, depending upon the requested service (as discussed in relation to FIG. **9**). Application processing is terminated in step **991** when the interactive service is completed, whereupon in step **992** the assigned TV channel is returned to the pool of available channels to the video path manager. Also, upon completion of the interactive service, the assigned user service card is also made available to the pool of available service application processors. In step **994**, the assigned frequency is returned to the pool of available frequency assignments so that the gateway can re-use the frequency for upstream data from another home interface controller.

Further details regarding system management and the use of service allocation servers therein can be found in copending U.S. application No. 08/987,405, filed Dec. 9, 1997, entitled "System Manager and Hypertext Control Interface for Interactive Cable Television System" and having the same assignee as the present application. The full disclosure of said copending patent application is hereby incorporated by reference herein.

FIG. **11** indicates the frequency spectrum of the various signals used by the television system. The spectrum to the left of the left-to-right arrow in FIG. **11** indicates upstream data, whereas the spectrum to the right of the right-to-left arrow in FIG. **11** indicates downstream data Interactive channels (NTSC video or MPEG**2**) are in channels 74–79 (522 MHZ to 552 MHZ). Upstream data has a small bandwidth of 25 kHz in the frequency range of 5 MHZ to 40 MHZ.

FIG. **12** shows a high-level diagram of the home interface controller in communication with the back end. In this embodiment, downstream data is in the form of packet data on a 300 Kbps data channel. When providing upstream data, the home interface controller uses a dedicated upstream channel requiring only a 25 kHz bandwidth for each home interface controller, so as to provide noise immunity. FIG. **12** is similar to FIG. **11**, except that a common upstream channel is used by all the home interface controllers for hailing the back end. No carrier or collision detection algorithms are employed, but rather, any lost requests due to collisions among the home interface controllers are "detected" by an absence of response from the back end after a suitable time-out. This common upstream channel is used only briefly during an initial log-on to request a private data channel, where the private data channel is indicated in FIG. **13**. As an alternative to the use of a hailing channel, the system manager may include an arrangement for the periodic broadcast, from the headend over a downstream portion of the data link to the home interface controllers, identifying of available channels; in this embodiment, each home interface controller has a rule for picking one of the available channels for use by the transmitter of its data transceiver.

What is claimed is:

1. A cable system headend connected to an information service distribution network, for delivering information services to subscriber televisions each associated with a home interface controller, the headend comprising:

a plurality of individually assignable processors each for receiving data communications from an assigned home interface controller and for generating information signals to be supplied over television signals through the information service distribution network to the subscriber television of the assigned home interface controller;

a frame server in communication with a plurality of home interface controllers each assigned to one of a plurality of processes running in said frame server for interactive service, said processes receiving data communications from the subscribers associated with their respective assigned home interface controllers said frame server generating interactive pages responsive to the data communications and supplying the interactive pages to the subscriber televisions associated with the assigned home interface controllers in digitally encoded television signals over the information service distribution network; and

a system manager in data communication with the home interface controllers for assigning said frame server or one of said plurality of individually assignable processors to a home interface controller requesting interactive service.

2. The cable system headend of claim **1** wherein the information service distribution network comprises a plurality of cables each serving a different service area and further comprising a switch for directing each television signal from one of said plurality of individually assignable processors to the cable serving the service area in which the respective assigned home interface controller is served.

3. The cable system headend of claim **2** further comprising a common channel transmitted throughout the information service distribution network for carrying the digitally encoded television signals from said frame server.

4. The cable system headend of claim **1** further comprising a common channel transmitted throughout the information service distribution network for carrying the digitally encoded television signals from said frame server.

5. An interactive cable system comprising:

(i) an information service distribution network, for delivering information services from a headend to subscriber television;

(ii) a plurality of home interface controllers, each home interface controller associated with a subscriber television and having a data transceiver operative over a data communications link to the headend;

(iii) a plurality of subscriber selection devices, each such device associated with a home interface controller and in communication with the data transceiver thereof;

(iv) a plurality of individually assignable processors, disposed at the headend, in assignable data communication with an assigned home interface controller and in television communication over the network with the subscriber television associated with the assigned home interface controller, and

(v) a frame server in communication with a plurality of home interface controllers each assigned to one of a plurality of processes running in said frame server for interactive service, said processes receiving data communications from the subscribers associated with their respective assigned home interface controllers, said frame server generating interactive pages responsive to the data communications and supplying the interactive pages to the subscriber televisions associated with the assigned home interface controllers in digitally encoded television signals over the information service distribution network.

6. The interactive cable system of claim **5** wherein each of said home interface controllers includes a cursor control program responsive to signals from the associated subscriber selection device for displaying a cursor and moving the cursor on an image displayed on the associated subscriber television.

7. The interactive cable system of claim **5** wherein said information service distribution network comprises a plurality of cables each serving a different service area and wherein the interactive cable system further comprises a switch for directing each television signal from one of said plurality of individually assignable processors to the cable serving the service area in which the respective assigned home interface controller is served.

8. The interactive cable system of claim **7** further comprising a common channel transmitted throughout said information service distribution network for carrying the digitally encoded television signals from said frame server.

9. The interactive cable system of claim **5** further comprising a common channel transmitted throughout said information service distribution network for carrying the digitally encoded television signals from said frame server.

* * * * *

EXHIBIT 8

to Declaration of Charles Cantine in Support of Plaintiff TVnGO's Opening Claim Construction Brief

UNITED STATES PATENT AND TRADEMARK OFFICE

UNITED STATES DEPARTMENT OF COMMERCE
United States Patent and Trademark Office
Address: COMMISSIONER FOR PATENTS
P.O. Box 1450
Alexandria, Virginia 22313-1450
www.uspto.gov

APPLICATION NO.	FILING DATE	FIRST NAMED INVENTOR	ATTORNEY DOCKET NO.	CONFIRMATION NO.
13/336,189	12/23/2011	Yakkov MERLIN	28462UY1	7907

23432 7590 04/16/2015
COOPER & DUNHAM, LLP
30 Rockefeller Plaza
20th Floor
NEW YORK, NY 10112

EXAMINER
FEATHERSTONE, MARK D

ART UNIT	PAPER NUMBER
2423	

MAIL DATE	DELIVERY MODE
04/16/2015	PAPER

Please find below and/or attached an Office communication concerning this application or proceeding.

The time period for reply, if any, is set in the attached communication.

PTOL-90A (Rev. 04/07)

Office Action Summary	Application No. 13/336,189	Applicant(s) MERLIN, YAKKOV	
	Examiner MARK D. FEATHERSTONE	Art Unit 2423	AIA (First Inventor to File) Status No

-- The MAILING DATE of this communication appears on the cover sheet with the correspondence address --

Period for Reply

A SHORTENED STATUTORY PERIOD FOR REPLY IS SET TO EXPIRE 3 MONTHS FROM THE MAILING DATE OF THIS COMMUNICATION.

- Extensions of time may be available under the provisions of 37 CFR 1.136(a). In no event, however, may a reply be timely filed after SIX (6) MONTHS from the mailing date of this communication.
- If NO period for reply is specified above, the maximum statutory period will apply and will expire SIX (6) MONTHS from the mailing date of this communication.
- Failure to reply within the set or extended period for reply will, by statute, cause the application to become ABANDONED (35 U.S.C. § 133). Any reply received by the Office later than three months after the mailing date of this communication, even if timely filed, may reduce any earned patent term adjustment. See 37 CFR 1.704(b).

Status

1)☒ Responsive to communication(s) filed on *04/06/2015*.

☐ A declaration(s)/affidavit(s) under **37 CFR 1.130(b)** was/were filed on _____.

2a)☐ This action is **FINAL**. 2b)☒ This action is non-final.

3)☐ An election was made by the applicant in response to a restriction requirement set forth during the interview on _____; the restriction requirement and election have been incorporated into this action.

4)☐ Since this application is in condition for allowance except for formal matters, prosecution as to the merits is closed in accordance with the practice under *Ex parte Quayle*, 1935 C.D. 11, 453 O.G. 213.

Disposition of Claims*

5)☒ Claim(s) *53-73* is/are pending in the application.

5a) Of the above claim(s) _____ is/are withdrawn from consideration.

6)☐ Claim(s) _____ is/are allowed.

7)☒ Claim(s) *53-73* is/are rejected.

8)☐ Claim(s) _____ is/are objected to.

9)☐ Claim(s) _____ are subject to restriction and/or election requirement.

* If any claims have been determined allowable, you may be eligible to benefit from the **Patent Prosecution Highway** program at a participating intellectual property office for the corresponding application. For more information, please see http://www.uspto.gov/patents/init_events/pph/index.jsp or send an inquiry to PPHfeedback@uspto.gov.

Application Papers

10)☐ The specification is objected to by the Examiner.

11)☐ The drawing(s) filed on _____ is/are: a)☐ accepted or b)☐ objected to by the Examiner.

Applicant may not request that any objection to the drawing(s) be held in abeyance. See 37 CFR 1.85(a).

Replacement drawing sheet(s) including the correction is required if the drawing(s) is objected to. See 37 CFR 1.121(d).

Priority under 35 U.S.C. § 119

12)☐ Acknowledgment is made of a claim for foreign priority under 35 U.S.C. § 119(a)-(d) or (f).

Certified copies:

a)☐ All b)☐ Some** c)☐ None of the:

1.☐ Certified copies of the priority documents have been received.

2.☐ Certified copies of the priority documents have been received in Application No. _____.

3.☐ Copies of the certified copies of the priority documents have been received in this National Stage application from the International Bureau (PCT Rule 17.2(a)).

** See the attached detailed Office action for a list of the certified copies not received.

Attachment(s)

1) ☒ Notice of References Cited (PTO-892)

2) ☒ Information Disclosure Statement(s) (PTO/SB/08a and/or PTO/SB/08b) Paper No(s)/Mail Date _____.

3) ☐ Interview Summary (PTO-413) Paper No(s)/Mail Date. _____ .

4) ☐ Other: _____.

DETAILED ACTION

Notice of Pre-AIA or AIA Status

The present application is being examined under the pre-AIA first to invent provisions.

Double Patenting

The nonstatutory double patenting rejection is based on a judicially created doctrine grounded in public policy (a policy reflected in the statute) so as to prevent the unjustified or improper timewise extension of the "right to exclude" granted by a patent and to prevent possible harassment by multiple assignees. A nonstatutory double patenting rejection is appropriate where the claims at issue are not identical, but at least one examined application claim is not patentably distinct from the reference claim(s) because the examined application claim is either anticipated by, or would have been obvious over, the reference claim(s). See, e.g., *In re Berg*, 140 F.3d 1428, 46 USPQ2d 1226 (Fed. Cir. 1998); *In re Goodman*, 11 F.3d 1046, 29 USPQ2d 2010 (Fed. Cir. 1993); *In re Longi*, 759 F.2d 887, 225 USPQ 645 (Fed. Cir. 1985); *In re Van Ornum*, 686 F.2d 937, 214 USPQ 761 (CCPA 1982); *In re Vogel*, 422 F.2d 438, 164 USPQ 619 (CCPA 1970); and *In re Thorington*, 418 F.2d 528, 163 USPQ 644 (CCPA 1969).

A timely filed terminal disclaimer in compliance with 37 CFR 1.321(c) or 1.321(d) may be used to overcome an actual or provisional rejection based on a nonstatutory double patenting ground provided the reference application or patent either is shown to be commonly owned with this application, or claims an invention made as a result of

activities undertaken within the scope of a joint research agreement. A terminal disclaimer must be signed in compliance with 37 CFR 1.321(b).

The USPTO internet Web site contains terminal disclaimer forms which may be used. Please visit http://www.uspto.gov/forms/. The filing date of the application will determine what form should be used. A web-based eTerminal Disclaimer may be filled out completely online using web-screens. An eTerminal Disclaimer that meets all requirements is auto-processed and approved immediately upon submission. For more information about eTerminal Disclaimers, refer to http://www.uspto.gov/patents/process/file/efs/guidance/eTD-info-I.jsp.

Claims 53-73 are provisionally rejected on the ground of nonstatutory double patenting over claims 49-70 of copending Application No. 13/336219. This is a provisional double patenting rejection because the patentably indistinct claims have not in fact been patented.

The subject matter claimed in the instant application is fully disclosed in the referenced copending application and would be covered by any patent granted on that copending application since the referenced copending application and the instant application are claiming common subject matter, as follows: The instant application claims a method of processing overlays wherein the overlay activation criterion is received from a distinct source as opposed to the video content. The co-pending application claims a similar method and further defines the user interface and switching between the IP content, video content, and overlay content. Therefore, the co-pending application covers the subject matter of the instant application. Furthermore, both the

instant application and the co-pending application have already had a terminal disclaimer filed with regard to the parent application (the same parent for both cases) which claims similar subject matter.

Furthermore, there is no apparent reason why applicant would be prevented from presenting claims corresponding to those of the instant application in the other copending application. See *In re Schneller*, 397 F.2d 350, 158 USPQ 210 (CCPA 1968). See also MPEP § 804.

Claim Rejections - 35 USC § 112

The following is a quotation of 35 U.S.C. 112(b):
(b) CONCLUSION.—The specification shall conclude with one or more claims particularly pointing out and distinctly claiming the subject matter which the inventor or a joint inventor regards as the invention.

The following is a quotation of 35 U.S.C. 112 (pre-AIA), second paragraph:
The specification shall conclude with one or more claims particularly pointing out and distinctly claiming the subject matter which the applicant regards as his invention.

Claim 53 recites the limitation "the combiner unit" in line 4 and line 26. There is insufficient antecedent basis for this limitation in the claim. It appears that this should recite “the combiner circuit”. The corresponding dependent claims are analyzed accordingly.

Claim 60 recites the limitation "the remote control unit" in line 2. There is insufficient antecedent basis for this limitation in the claim, as there is no remote control unit recited in claim 53. Examiner notes that a remote control is recited in claim 64.

Claim 69 recites the limitation "the combiner unit" in line 6. There is insufficient antecedent basis for this limitation in the claim. It appears that this should recite “the combiner circuit”.

Claim 71 recites the limitation "the remote control unit" in line 2. There is insufficient antecedent basis for this limitation in the claim, as there is no remote control unit recited in claim 65. Examiner notes that a remote control is recited in claim 73.

Examiner requests applicant to ensure proper antecedent basis for all limitations of the claims.

Contact

Any inquiry concerning this communication or earlier communications from the examiner should be directed to MARK D. FEATHERSTONE whose telephone number is (571)270-3750. The examiner can normally be reached on 8:00 AM - 5:00 PM M-F US Eastern.

If attempts to reach the examiner by telephone are unsuccessful, the examiner's supervisor, Benjamin Bruckart can be reached on 571-272-3982. The fax phone number for the organization where this application or proceeding is assigned is 571-273-8300.

Information regarding the status of an application may be obtained from the Patent Application Information Retrieval (PAIR) system. Status information for published applications may be obtained from either Private PAIR or Public PAIR. Status information for unpublished applications is available through Private PAIR only. For more information about the PAIR system, see http://pair-direct.uspto.gov. Should you have questions on access to the Private PAIR system, contact the Electronic Business Center (EBC) at 866-217-9197 (toll-free). If you would like assistance from a USPTO Customer Service Representative or access to the automated information system, call 800-786-9199 (IN USA OR CANADA) or 571-272-1000.

/MARK D FEATHERSTONE/
Primary Examiner, Art Unit 2423

Notice of References Cited	Application/Control No. 13/336,189	Applicant(s)/Patent Under Reexamination MERLIN, YAKKOV	
	Examiner MARK D. FEATHERSTONE	Art Unit 2423	Page 1 of 1

U.S. PATENT DOCUMENTS

*		Document Number Country Code-Number-Kind Code	Date MM-YYYY	Name	Classification
*	A	US-2002/0007493 A1	01-2002	BUTLER et al.	725/109
*	B	US-2004/0107437 A1	06-2004	Reichardt et al.	725/037
*	C	US-7,124,430 B2	10-2006	Aratani et al.	725/142
*	D	US-7,340,457 B1	03-2008	Killian et al.	1/1
	E	US-			
	F	US-			
	G	US-			
	H	US-			
	I	US-			
	J	US-			
	K	US-			
	L	US-			
	M	US-			

FOREIGN PATENT DOCUMENTS

*		Document Number Country Code-Number-Kind Code	Date MM-YYYY	Country	Name	Classification
	N					
	O					
	P					
	Q					
	R					
	S					
	T					

NON-PATENT DOCUMENTS

*		Include as applicable: Author, Title Date, Publisher, Edition or Volume, Pertinent Pages)
	U	
	V	
	W	
	X	

*A copy of this reference is not being furnished with this Office action. (See MPEP § 707.05(a).)
Dates in MM-YYYY format are publication dates. Classifications may be US or foreign.

EXHIBIT 9

to Declaration of Charles Cantine in Support of Plaintiff TVnGO's Opening Claim Construction Brief

Merriam-Webster's Collegiate® Dictionary

Eleventh Edition

Merriam-Webster's Collegiate® Dictionary

ELEVENTH EDITION

Merriam-Webster, Incorporated
Springfield, Massachusetts, U.S.A.

A GENUINE MERRIAM-WEBSTER

The name *Webster* alone is no guarantee of excellence. It is used by a number of publishers and may serve mainly to mislead an unwary buyer.

Merriam-Webster™ is the name you should look for when you consider the purchase of dictionaries or other fine reference books. It carries the reputation of a company that has been publishing since 1831 and is your assurance of quality and authority.

Copyright © 2005 by Merriam-Webster, Incorporated

Library of Congress Cataloging in Publication Data

Merriam-Webster's collegiate dictionary. — Eleventh ed.
p. cm.
Includes index.
ISBN-13: 978-0-87779-807-1 (Laminated unindexed : alk. paper)
ISBN-10: 0-87779-807-9 (Laminated unindexed : alk. paper)
ISBN-13: 978-0-87779-808-8 (Jacketed hardcover unindexed : alk. paper)
ISBN-10: 0-87779-808-7 (Jacketed hardcover unindexed : alk. paper)
ISBN-13: 978-0-87779-809-5 (Jacketed hardcover with CD-ROM : alk. paper)
ISBN-10: 0-87779-809-5 (Jacketed hardcover with CD-ROM : alk. paper)
ISBN-13: 978-0-87779-810-1 (Leatherlook with CD-ROM : alk. paper)
ISBN-10: 0-87779-810-9 (Leatherlook with CD-ROM : alk. paper)
ISBN-13: 978-0-87779-813-2 (Canadian)
ISBN-10: 0-87779-813-3 (Canadian)
ISBN-13: 978-0-87779-814-9 (International)
ISBN-10: 0-87779-814-1 (International)
1. English language—Dictionaries. I. Title: Collegiate dictionary. II. Merriam-Webster, Inc.
PE1628.M36 2003
423—dc21 2003003674
CIP

Merriam-Webster's Collegiate® Dictionary, Eleventh Edition, principal copyright 2003

COLLEGIATE is a registered trademark of Merriam-Webster, Incorporated

All rights reserved. No part of this book covered by the copyrights hereon may be reproduced or copied in any form or by any means—graphic, electronic, or mechanical, including photocopying, taping, or information storage and retrieval systems—without written permission of the publisher.

Made in the United States of America

67TT:QWV05

fyü-zhə-nist\ *n* (1964) : a certified medical tech
xtracorporeal oxygenation of the blood during
for the operation and maintenance of equip
achine) controlling it
ər-ˈgō-\ *n* [It, fr. L *pergula*] (1675) **1** : ARBOR
are usu. consisting of parallel colonnades sup
girders and cross rafters
raps\ *adv* [*per* + *hap*] (1528) : possibly but not

ething open to doubt or conjecture
eri fairy, genius, fr. MPers *parīk*; akin to Av
1780) **1** : a supernatural being in Persian folk
allen angels and excluded from paradise until
ed **2** : a beautiful and graceful girl
around, in excess, fr. *peri*; akin to Gk *peran* to
at FARE] **1** : all around : about ⟨*periscope*⟩ **2**
: enclosing : surrounding ⟨*perineurium*⟩
th\ *n* [NL *perianthium*, fr. *peri-* + Gk *anthos*
THOLOGY] (ca. 1806) : the floral structure com
l corolla esp. when the two whorls are fused —
n
[MF or Gk; MF *periapte*, fr. Gk *periapton*, fr. *pe*
nd (oneself), fr. *peri-* + *haptein* to fasten] (15
är-dē-əl\ *adj* (1654) : of, relating to, or affecting
situated around the heart
lī-təs\ *n* [NL] (ca. 1783) : inflammation of the

dē-əm\ *n, pl* **-dia** \-dē-ə\ [ME, fr. ML, fr. G
perikardios around the heart, fr. *peri-* + *kardia*
T] (15c) **1** : the conical sac of serous membrane
and the roots of the great blood vessels of verte
space that contains the heart of an invertebrate
part of the hemocoel
\ *n* [NL *pericarpium*, fr. Gk *perikarpion* pod, fr.
(1759) : the ripened and variously modified wall
: ENDOCARP illustration
r-ə-ˈkän-drē-əm\ *n, pl* **-dria** \-drē-ə\ [NL, fr. *peri*
cartilage] (1741) : the membrane of fibrous con
ests cartilage except at joints — **peri·chon·dri**

pē\ *n* [LL, fr. Gk *perikopē* section, fr. *peri-* + *koptein* to cut — more at CAPON] (1658) : a selection
ECTION 1
-ˈkrā-nē-əm\ *n, pl* **-nia** \-nē-ə\ [ME *pericranium*, neut. of *perikranios* around the skull, fr. — more at CRANIUM] (15c) : the external peri
peri·cra·ni·al \-nē-əl\ *adj*
kəl\ *n* [F *péricycle*, fr. Gk *perikyklos* spherical, fr. - more at WHEEL] (ca. 1892) : a thin layer of pa
renchymatous cells that surrounds the stele in
— **peri·cy·clic** \ˌper-ə-ˈsī-klik\ *adj*
m\ *n* [NL *peridermis*, fr. *peri-* + *-dermis*] (1840)
ue; *esp* : a cortical protective layer of many roots
ly consists of phellem, phellogen, and phelloderm
əm\ *n, pl* **pe·rid·ia** \-dē-ə\ [NL, fr. Gk *péridion*
bag] (ca. 1823) : the outer envelope of the spore

-ˌdō(t)\ *n* [F *péridot*, fr. OF *peritot*] (ca. 1706) : a
transparent variety of olivine used as a gem —
lä-tik, -ˈdō-\ *adj*
ə-ˌtīt\ *n* [F *péridotite*, fr. *péridot*] (1878) : any of a
eous rocks composed of ferromagnesian minerals
ə·ri·do·tit·ic \pə-ˌri-də-ˈti-tik\ *adj*
n [MF, fr. NL *perigeum*, fr. Gk *perigeion*, fr. neut.
earth, fr. *peri-* + *gē* earth] (1594) : the point in the
a satellite) orbiting the earth that is nearest to the
so : the point nearest a planet or a satellite (as the
object orbiting it — compare APOGEE — peri
adj
i-jə-nəs\ *adj* [NL *perigynus*, fr. *peri-* + *gynos*
ne on a ring or cup of the receptacle surrounding
also : having perigynous stamens and petals (~
ny \-nē\ *n*
ēl-yən\ *n, pl* **-he·lia** \-ˈhēl-yə\ [NL, fr. *peri-* + G
SOLAR] (1666) : the point in the path of a celestial
at is nearest to the sun — compare APHELION —
\ *adj*
ə-ˌän, -ən\ *n, pl* **-kar·ya** \-ē-ə\ [NL, fr. *peri-* + G
- more at CAREEN] (1897) : CELL BODY — peri
, *n* [ME, fr. AF, fr. L *periculum* — more at PERIL]
to the risk of being injured, destroyed, or lost
he city in ~⟩ **2** : something that imperils : haz
: streets⟩
d; -il·ing *also* **-il·ling** (1567) : to expose to danger
[NL] (1900) : any of a genus (*Perilla*) of Asiatic
abiate fruiting calyx and rugose nutlets
ˈpe-rə-\ *adj* (14c) : full of or involving peril ⟨a
DANGEROUS — **per·il·ous·ly** *adv* — peri·l·ous·

\ *n* [*peri-* + L *luna* moon] — more at LUNAR]
the path of a body orbiting the moon that is nea
he moon — compare APOLUNE
\ *n* [ISV] (ca. 1839) : the fluid between the mem
byrinths of the ear
ˌper-ē-ˈme-nə-ˌpōz, -ˈmē-\ *n* (1962) : the period
menopause that is often marked by various physi
shes and menstrual irregularity) — peri·men·o·
ə-zəl, -ˌmē-\ *adj*
nə-tər\ *n* [ME *perimetre*, fr. L *perimetros*, fr. Gk, fr.
are — more at MEASURE] (15c) **1 a** : the bounda
figure **b** : the length of a perimeter **2** : a fixed

strip bounding or protecting an area **3** : outer limits — often used in
4 : the part of a basketball court outside the three-point line
peri·my·si·um \ˌper-ə-ˈmi-zhē-əm, -zē-\ *n, pl* **-sia** \-zhē-ə, -zē-\ [NL, ir-
reg. fr. *peri-* + Gk *mys* mouse, muscle — more at MOUSE] (ca. 1842)
: the connective-tissue sheath that surrounds a muscle and forms
sheaths for the bundles of muscle fibers
peri·na·tal \-ˈnā-tᵊl\ *adj* (1952) : occurring in, concerned with, or being
in the period around the time of birth ⟨~ mortality⟩ ⟨~ care⟩ —
peri·na·tal·ly \-tᵊl-(l)ē\ *adv*
peri·na·tol·o·gy \ˌper-ə-ˌnā-ˈtä-lə-jē\ *n* (1969) : a branch of medicine
concerned with perinatal care — **peri·na·tol·o·gist** \-jist\ *n*
peri·ne·um \ˌper-ə-ˈnē-əm\ *n, pl* **-nea** \-ˈnē-ə\ [ME, fr. LL *perinaion*,
fr. Gk, fr. *peri-* + *inan* to empty out; perh. akin to Skt *iṇāti* he sets in
motion] (15c) : an area of tissue that marks externally the approximate
boundary of the outlet of the pelvis and gives passage to the urinogen-
ital ducts and rectum; *also* : the area between the anus and the posteri-
or part of the external genitalia — **per·i·ne·al** \-ˈnē-əl\ *adj*
peri·neu·ri·um \ˌper-ə-ˈnůr-ē-əm, -ˈnyůr-\ *n, pl* **-ria** \-ē-ə\ [NL, fr. *peri-*
+ Gk *neuron* nerve — more at NERVE] (ca. 1842) : the connective-
tissue sheath that surrounds a bundle of nerve fibers
pe·ri·od \ˈpir-ē-əd\ *n* [ME *periode*, fr. MF, fr. ML, L, & Gk; ML *perio-*
dus period of time, punctuation mark, fr. L & Gk; L, rhetorical period,
fr. Gk *periodos* circuit, period of time, rhetorical period, fr. *peri-* + *ho-*
dos way] (ca. 1530) **1** : the completion of a cycle, a series of events, or
a single action : CONCLUSION **2 a** (1) : an utterance from one full stop
to another : SENTENCE (2) : a well-proportioned sentence of several
clauses (3) : PERIODIC SENTENCE **b** : a musical structure or melodic
section usu. composed of two or more contrasting or complementary
phrases and ending with a cadence **3 a** : the full pause with which the
utterance of a sentence closes **b** : END, STOP **4** *obs* : GOAL, PURPOSE
5 (1) : a point , used to mark the end (as of a declarative sentence or
an abbreviation) (2) — used interjectionally to emphasize the finality
of the preceding statement ⟨I don't remember — ~⟩ **b** : a rhythmical
unit in Greek verse composed of a series of two or more cola **6 a** : a
portion of time determined by some recurring phenomenon **b** (1)
: the interval of time required for a cyclic motion or phenomenon to
complete a cycle and begin to repeat itself (2) : a number *k* that does
not change the value of a periodic function *f* when added to the inde-
pendent variable; *esp* : the smallest such number **c** : a single cyclic oc-
currence of menstruation **7 a** : a chronological division : STAGE **b**
: a division of geologic time longer than an epoch and included in an
era **c** : a stage of culture having a definable place in time and space
8 a : one of the divisions of the academic day **b** : one of the divisions
of the playing time of a game
syn PERIOD, EPOCH, ERA, AGE mean a division of time. PERIOD may
designate an extent of time of any length ⟨*periods* of economic pros-
perity⟩. EPOCH applies to a period begun or set off by some significant
or striking quality, change, or series of events ⟨the steam engine
marked a new *epoch* in industry⟩. ERA suggests a period of history
marked by a new or distinct order of things ⟨the *era* of global commu-
nications⟩. AGE is used frequently of a fairly definite period dominat-
ed by a prominent figure or feature ⟨the *age* of Samuel Johnson⟩.
period *adj* (1905) : of, relating to, or representing a particular historical
period ⟨~ furniture⟩ ⟨~ costumes⟩
pe·ri·od·ic \ˌpir-ē-ˈä-dik\ *adj* (1642) **1 a** : occurring or recurring at
regular intervals **b** : occurring repeatedly from time to time **2 a**
: consisting of or containing a series of repeated stages, processes, or
digits : CYCLIC ⟨~ decimals⟩ ⟨a ~ vibration⟩ **b** : being a function
any value of which recurs at regular intervals **3** : expressed in or char-
acterized by periodic sentences
per·iod·ic acid \ˌpər-(ˌ)ī-ˈä-dik-\ *n* [ISV *per-* + *iodic*] (1836) : any of the
strongly oxidizing acids (as H_5IO_6 or HIO_4) that are the most highly ox-
idized acids of iodine
[1]**pe·ri·od·i·cal** \ˌpir-ē-ˈä-di-kəl\ *adj* (1601) **1** : PERIODIC 1 **2 a** : pub-
lished with a fixed interval between the issues or numbers **b** : pub-
lished in, characteristic of, or connected with a periodical
[2]**periodical** *n* (1798) : a periodical publication
periodical cicada *n* (1890) : SEVENTEEN-YEAR LOCUST
pe·ri·od·i·cal·ly \ˌpir-ē-ˈä-di-k(ə-)lē\ *adv* (1646) **1** : at regular intervals
of time **2** : from time to time : FREQUENTLY
pe·ri·od·ic·i·ty \ˌpir-ē-ə-ˈdi-sə-tē\ *n* (1833) : the quality, state, or fact of
being regularly recurrent or having periods
periodic law *n* (1872) : a law in chemistry: the elements when arranged
in the order of their atomic numbers show a periodic variation of
atomic structure and of most of their properties
periodic sentence *n* (ca. 1928) : a usu. complex sentence that has no
subordinate or trailing elements following its principal clause (as in
"yesterday while I was walking down the street, I saw him")
periodic table *n* (1895) : an arrangement of chemical elements based
on the periodic law
pe·ri·od·i·za·tion \ˌpir-ē-ə-də-ˈzā-shən\ *n* (1938) : division (as of history) into periods
peri·odon·tal \ˌper-ē-ō-ˈdän-tᵊl\ *adj* (1854) **1** : investing or surround-
ing a tooth **2** : of or affecting periodontal tissues or regions ⟨~ dis-
eases⟩ — **peri·odon·tal·ly** \-tᵊl-ē\ *adv*
periodontal membrane *n* (1899) : the fibrous connective-tissue layer
covering the cementum of a tooth and holding it in place in the jaw-
bone
peri·odon·tics \-ˈdän-tiks\ *n pl but sing or pl in constr* [NL *periodontium*
periodontal tissue, fr. *peri-* + Gk *odont-, odous, odōn* tooth — more at
TOOTH] (ca. 1944) : a branch of dentistry that deals with diseases of the
supporting and investing structures of the teeth including the gums, ce-
mentum, periodontal membranes, and alveolar bone — **peri·odon-
tist** \-ˈdän-tist\ *n*
peri·odon·ti·tis \ˌper-ē-(ˌ)ō-ˌdän-ˈtī-təs\ *n* [NL] (1872) : inflammation
of the supporting structures of the teeth and esp. the periodontal mem-
brane
peri·odon·tol·o·gy \-ˌdän-ˈtä-lə-jē\ *n* (1914) : PERIODONTICS
period piece *n* (1940) : a work (as of literature, art, furniture, cinema,
or music) whose special value lies in its evocation of a historical period
peri·onych·i·um \ˌper-ē-ō-ˈni-kē-əm\ *n, pl* **-ia** \-kē-ə\ [NL, fr. *peri-* +
Gk *onych-, onyx* nail — more at NAIL] (ca. 1879) : the tissue bordering
the root and sides of a fingernail or toenail
peri·op·er·a·tive \ˌper-ē-ˈä-p(ə-)rə-tiv, -pə-ˌrā-\ *adj* (1966) : relating to,
occurring in, or being the period around the time of a surgical opera-
tion ⟨~ morbidity⟩ ⟨~ nursing⟩
peri·os·te·al \ˌper-ē-ˈäs-tē-əl\ *adj* (1830) **1** : situated around or pro-
duced external to bone **2** : of, relating to, or involving the periosteum
peri·os·te·um \-tē-əm\ *n, pl* **-tea** \-tē-ə\ [NL, fr. LL *periosteon*, fr. Gk,
neut. of *periosteos* around the bone, fr. *peri-* + *osteon* bone — more at
OSSEOUS] (1597) : the membrane of connective tissue that closely in-
vests all bones except at the articular surfaces

PERIODIC TABLE

This is a common long form of the table. Roman numerals and letters heading the vertical columns indicate the groups. (There are differences of opinion regarding the letter designations, but those given here are probably the most generally used. Also, international standards favor numbering the groups 1–18 from left to right using Arabic numerals, but the designations shown below remain quite common.) The horizontal rows represent the periods, with two series removed from the two very long periods and represented below the main table. Atomic numbers are given above the symbols for the elements. Compare ELEMENT table.

IA[1]	IIA[2]	IIIB	IVB	VB	VIB	VIIB	VIII			IB	IIB	IIIA	IVA	VA	VIA	VIIA[3]	VIIIA[4]
																1 H	2 He
												5 B	6 C	7 N	8 O	9 F	10 Ne
	4 Be											13 Al	14 Si	15 P	16 S	17 Cl	18 Ar
11 Na	12 Mg																
19 K	20 Ca	21 Sc	22 Ti	23 V	24 Cr	25 Mn	26 Fe	27 Co	28 Ni	29 Cu	30 Zn	31 Ga	32 Ge	33 As	34 Se	35 Br	36 Kr
37 Rb	38 Sr	39 Y	40 Zr	41 Nb	42 Mo	43 Tc	44 Ru	45 Rh	46 Pd	47 Ag	48 Cd	49 In	50 Sn	51 Sb	52 Te	53 I	54 Xe
55 Cs	56 Ba	57 *La	72 Hf	73 Ta	74 W	75 Re	76 Os	77 Ir	78 Pt	79 Au	80 Hg	81 Tl	82 Pb	83 Bi	84 Po	85 At	86 Rn
87 Fr	88 Ra	89 #Ac	104 Rf	105 Db	106 Sg	107 Bh	108 Hs	109 Mt	110 Ds								

*LANTHANIDE SERIES	58 Ce	59 Pr	60 Nd	61 Pm	62 Sm	63 Eu	64 Gd	65 Tb	66 Dy	67 Ho	68 Er	69 Tm	70 Yb	71 Lu
#ACTINIDE SERIES	90 Th	91 Pa	92 U	93 Np	94 Pu	95 Am	96 Cm	97 Bk	98 Cf	99 Es	100 Fm	101 Md	102 No	103 Lr

[1] Group IA (excluding hydrogen) comprises the alkali metals.
[2] Group IIA comprises the alkaline earth metals.
[3] Group VIIA (excluding hydrogen) comprises the halogens.
[4] Group VIIIA (also called group Zero) comprises the noble gases.