US 20170043066A1

(19) United States

(12) Patent Application Publication

Laub

(10) Pub. No.: US 2017/0043066 A1

(43) Pub. Date: Feb. 16, 2017

(54) **STEERABLE ASPIRATION CATHETER SYSTEM**

(71) Applicant: **TDL Innovations, LLC**, Princeton, NJ (US)

(72) Inventor: **Glenn W. Laub**, Princeton, NJ (US)

(73) Assignee: **TDL Innovations, LLC**, Princeton, NJ (US)

(21) Appl. No.: **15/233,870**

(22) Filed: **Aug. 10, 2016**

Related U.S. Application Data

(60) Provisional application No. 62/204,089, filed on Aug. 12, 2015.

Publication Classification

(51) **Int. Cl.**

A61M 1/00	(2006.01)
A61M 1/32	(2006.01)
A61M 25/09	(2006.01)
A61M 25/01	(2006.01)

(52) **U.S. Cl.**

CPC ***A61M 1/008*** (2013.01); ***A61M 25/0147*** (2013.01); ***A61M 1/32*** (2013.01); ***A61M 1/0056*** (2013.01); ***A61M 25/09*** (2013.01); ***A61M 1/0066*** (2013.01); ***A61M 25/0113*** (2013.01); *A61M 2205/7545* (2013.01)

(57) **ABSTRACT**

A system for removing material from the body of a patient, the system including a aspiration catheter insertable into the patient having a distal end with a steerable tip configured to bend in one or more directions and a controller mechanically coupled to the aspiration catheter and operable by a user to bend the steerable tip in the one or more directions. The system may also include a pump having an inlet port in fluid communication with the aspiration catheter and a discharge port in fluid communication with a return catheter configured to be inserted into the patient to return aspirated blood to the patient. A filter device may be positioned between the aspiration catheter and the pump, the filter device configured to trap solid material received in the aspiration catheter from the body of the patient.

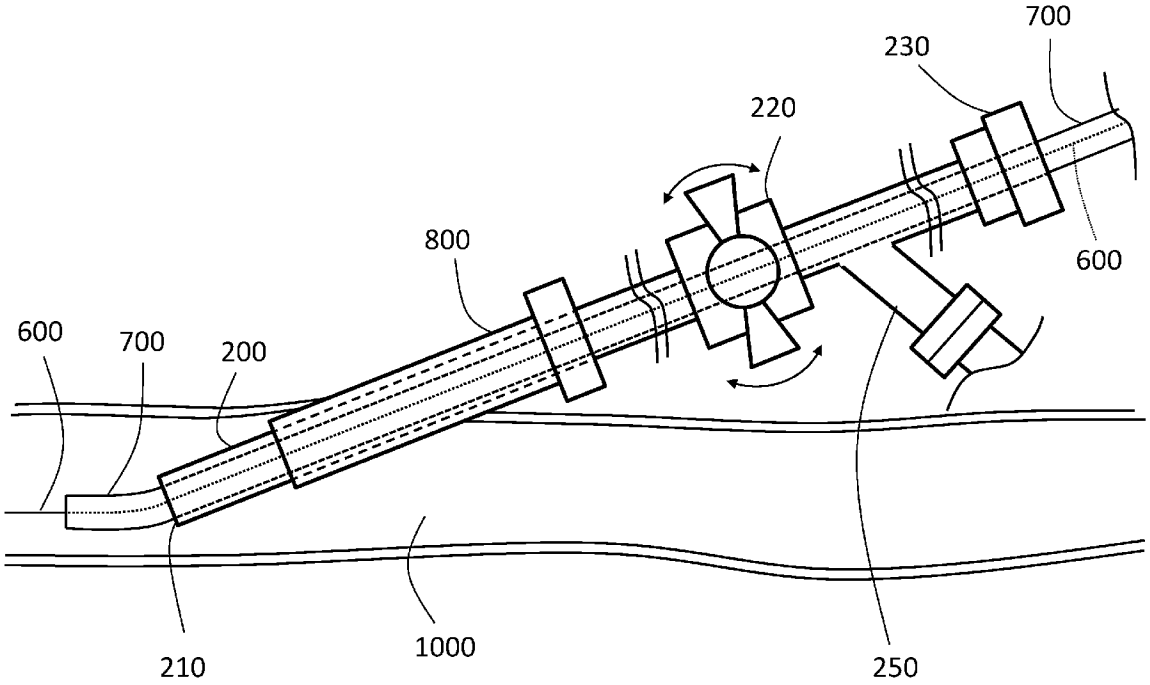

Imperative Care v. Inari Medical
IPR2026-00215
Imperative Care Ex. 1011

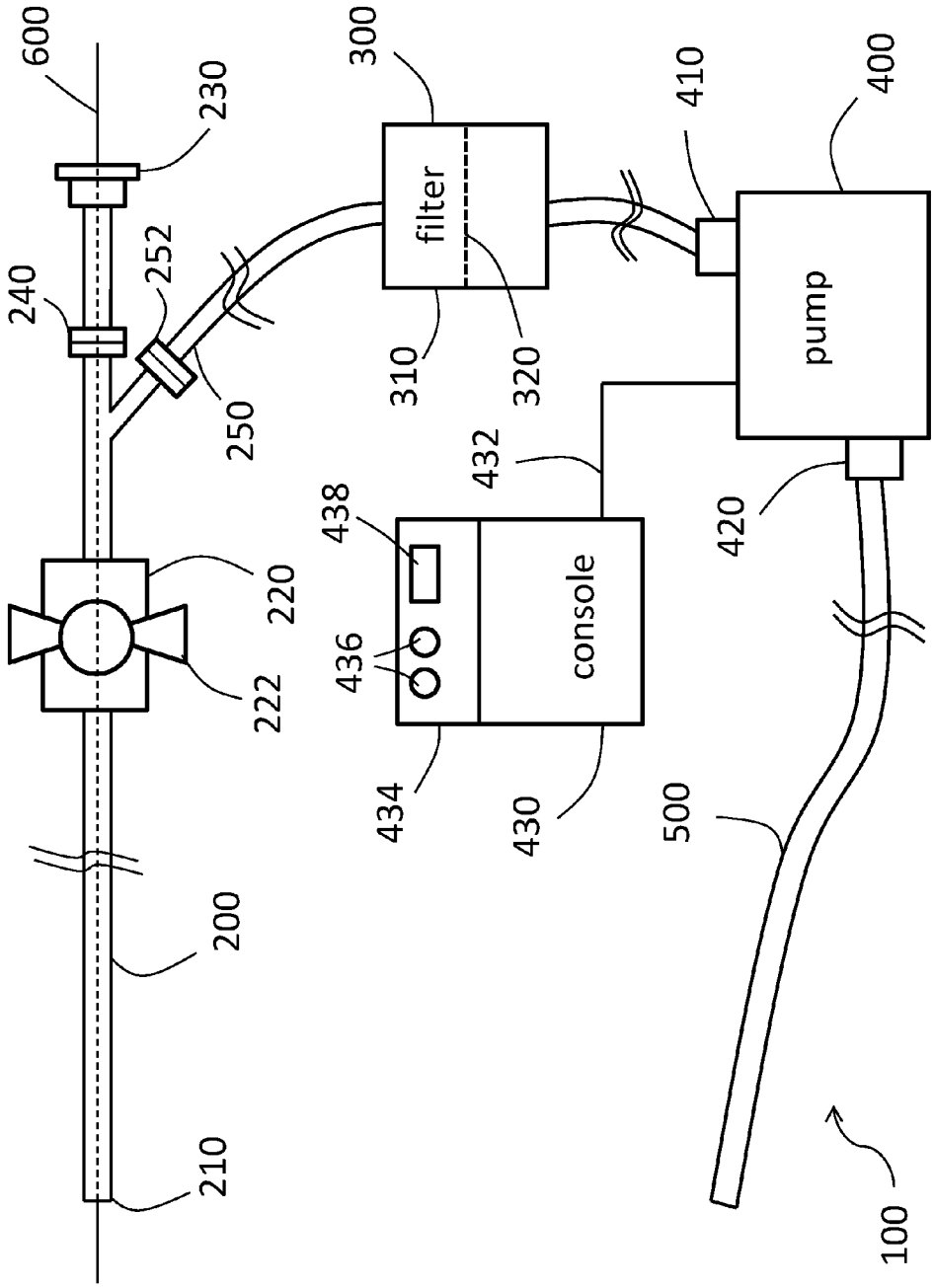
600
230
240
252
250
300
filter
310
320
410
400
pump
432
438
436
console
434
430
420
220
222
200
210
500
100

FIG. 1A

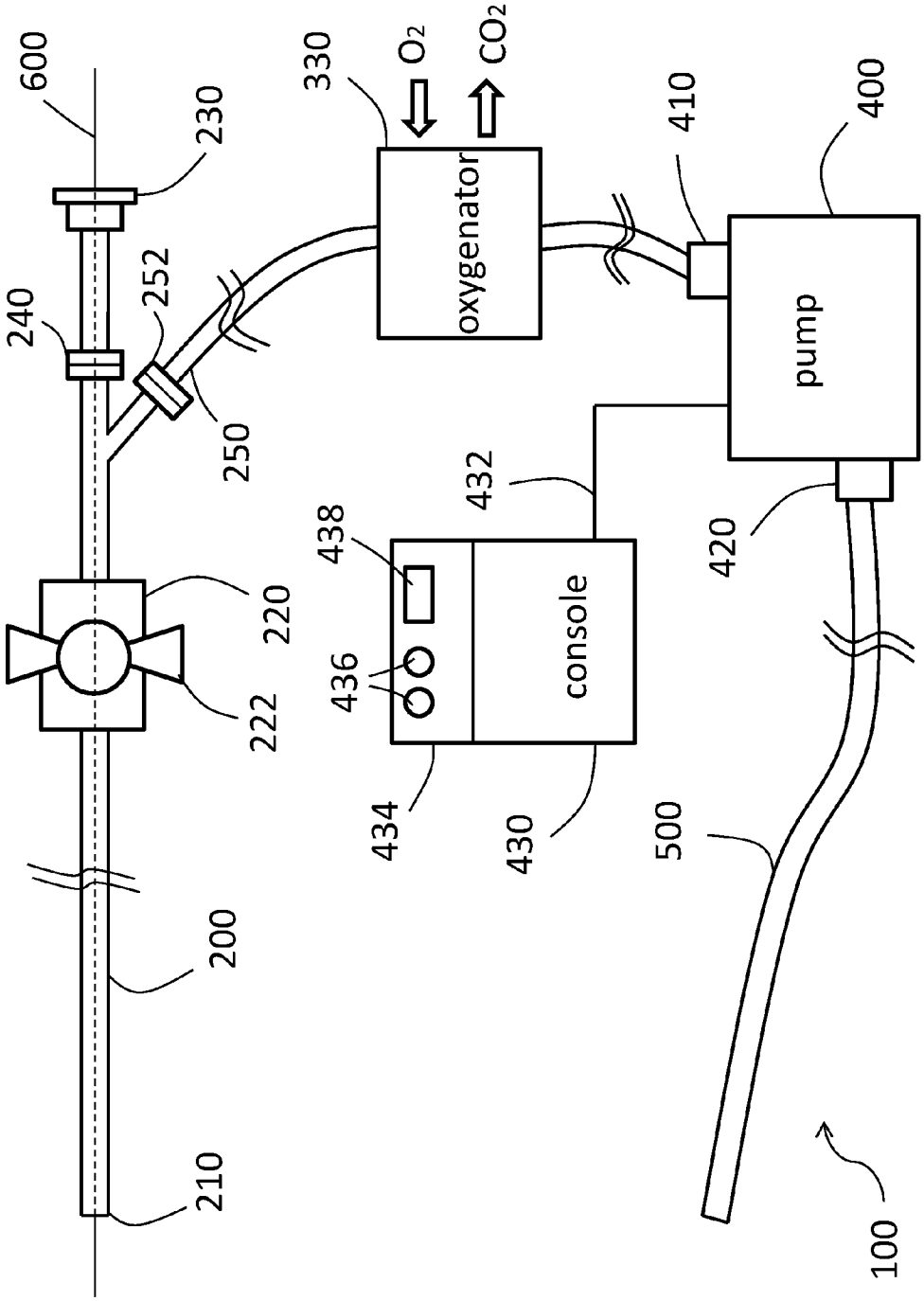
600
230
240
252
250
330
O_2
CO_2
oxygenator
410
400
pump
432
438
436
console
434
430
420
220
222
200
210
500
100

FIG. 1B

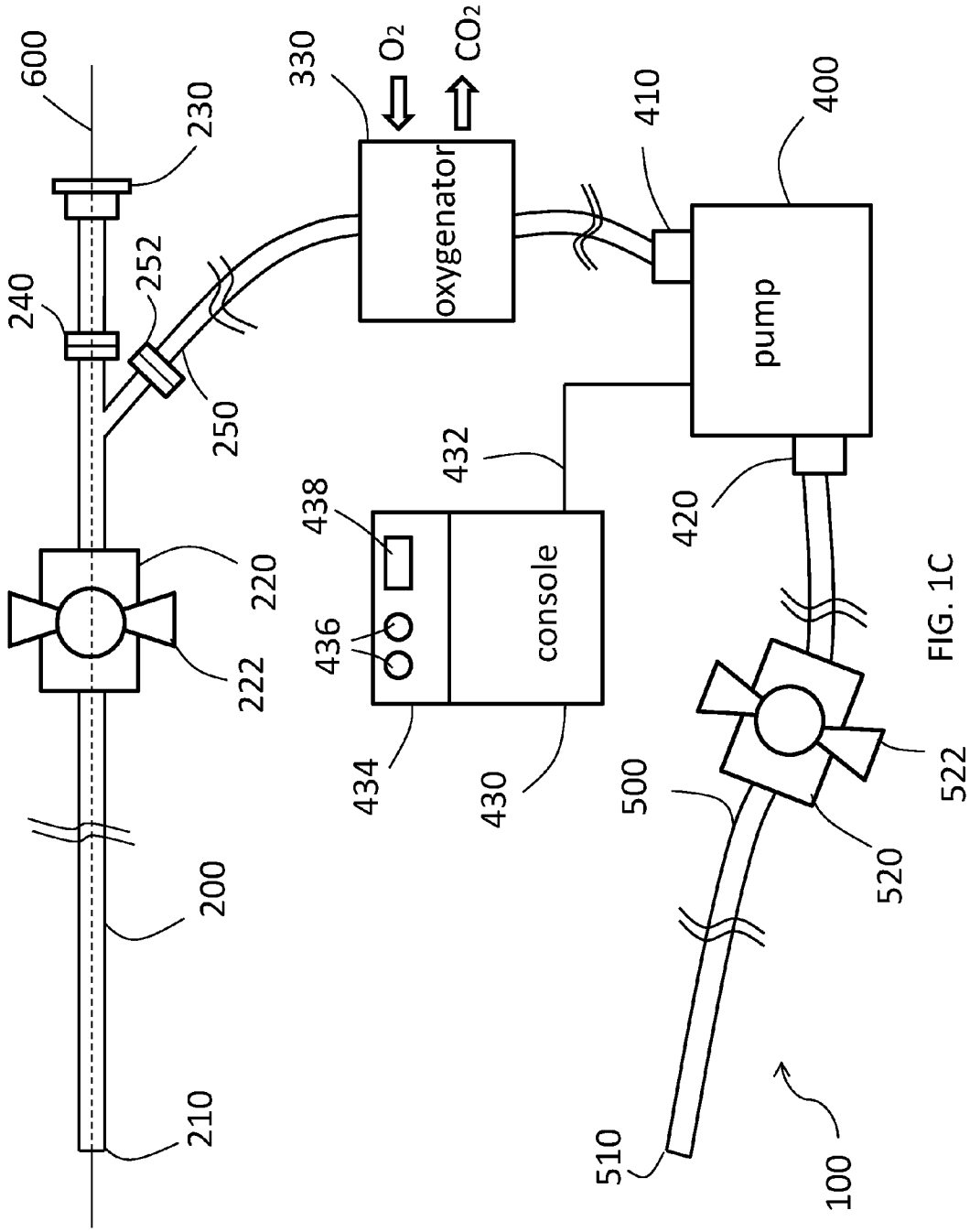
600
230
240
252
250
330
O_2
CO_2
oxygenator
410
400
pump
432
438
436
434
console
430
420
220
222
200
210
500
510
520
522
100

FIG. 1C

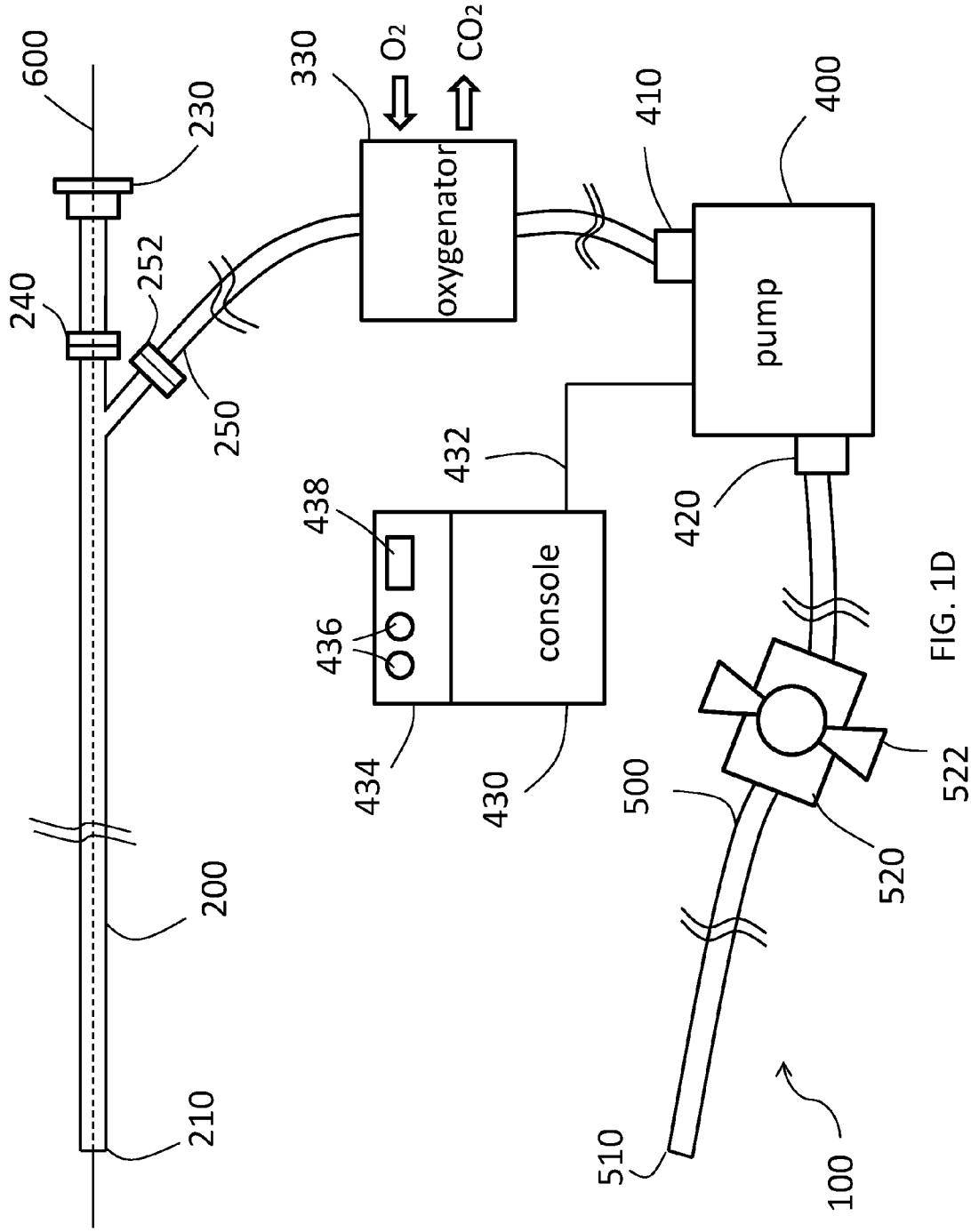
600
230
240
252
250
330
O_2
CO_2
oxygenator
410
400
pump
432
438
436
434
console
430
420
500
522
520
200
210
510
100

FIG. 1D

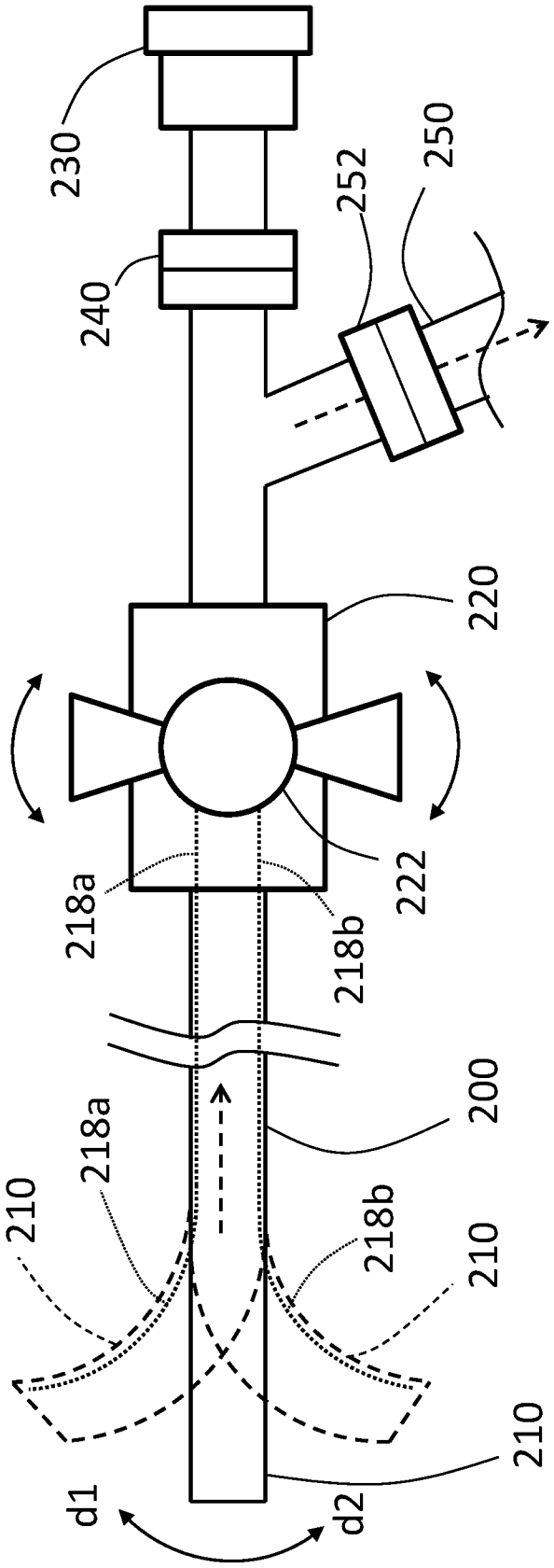
230
240
252
250
220
222
218a
218b
200
218a
210
218b
210
210
d1
d2

FIG. 2

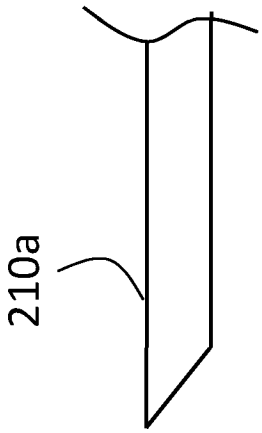

FIG. 3A

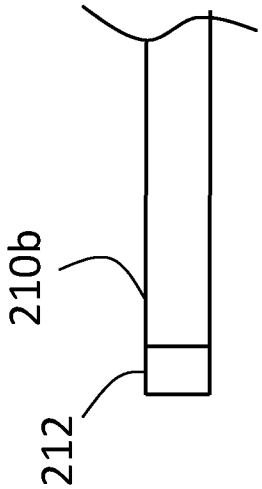

FIG. 3B

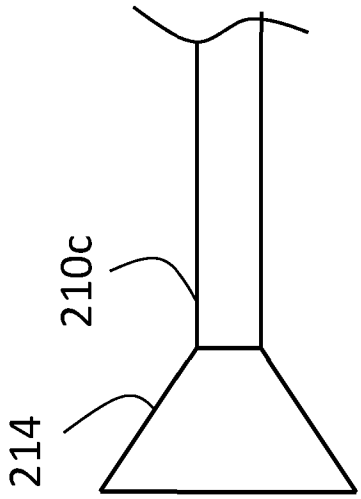

FIG. 3C

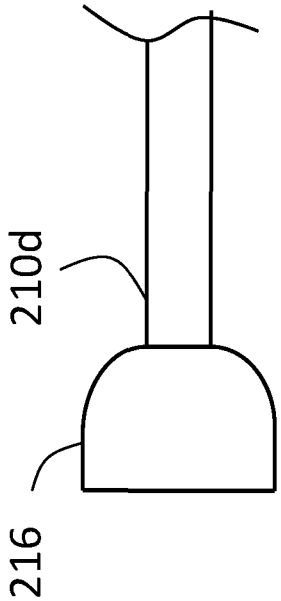

FIG. 3D

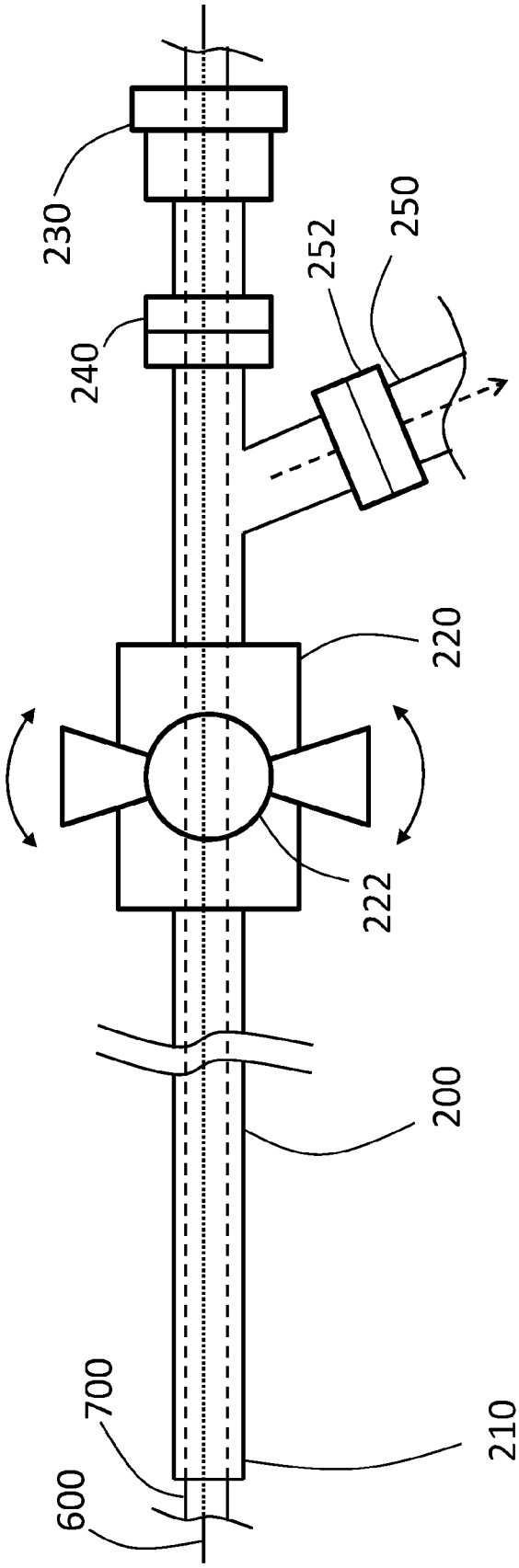

FIG. 4

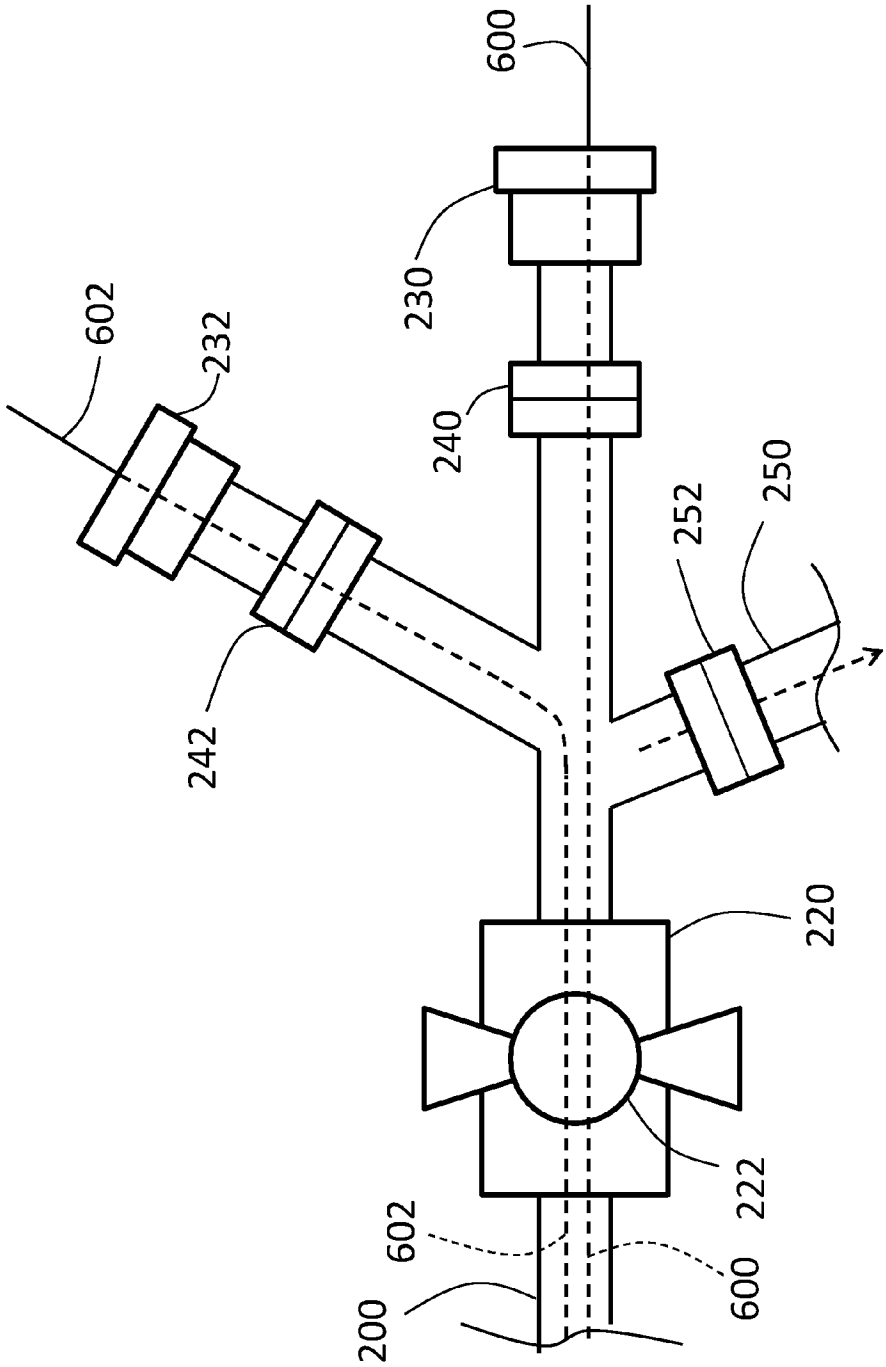

FIG. 5

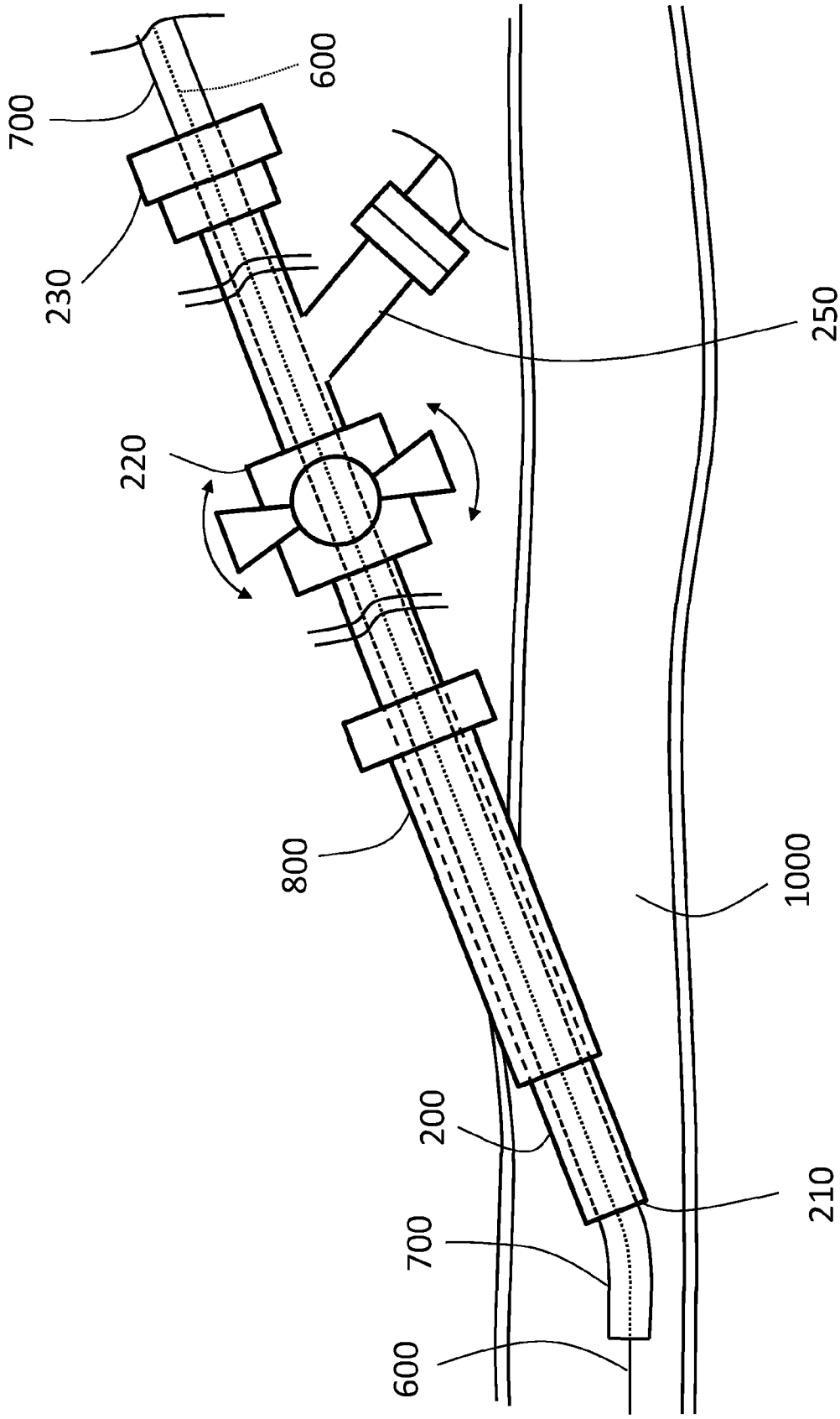

FIG. 6

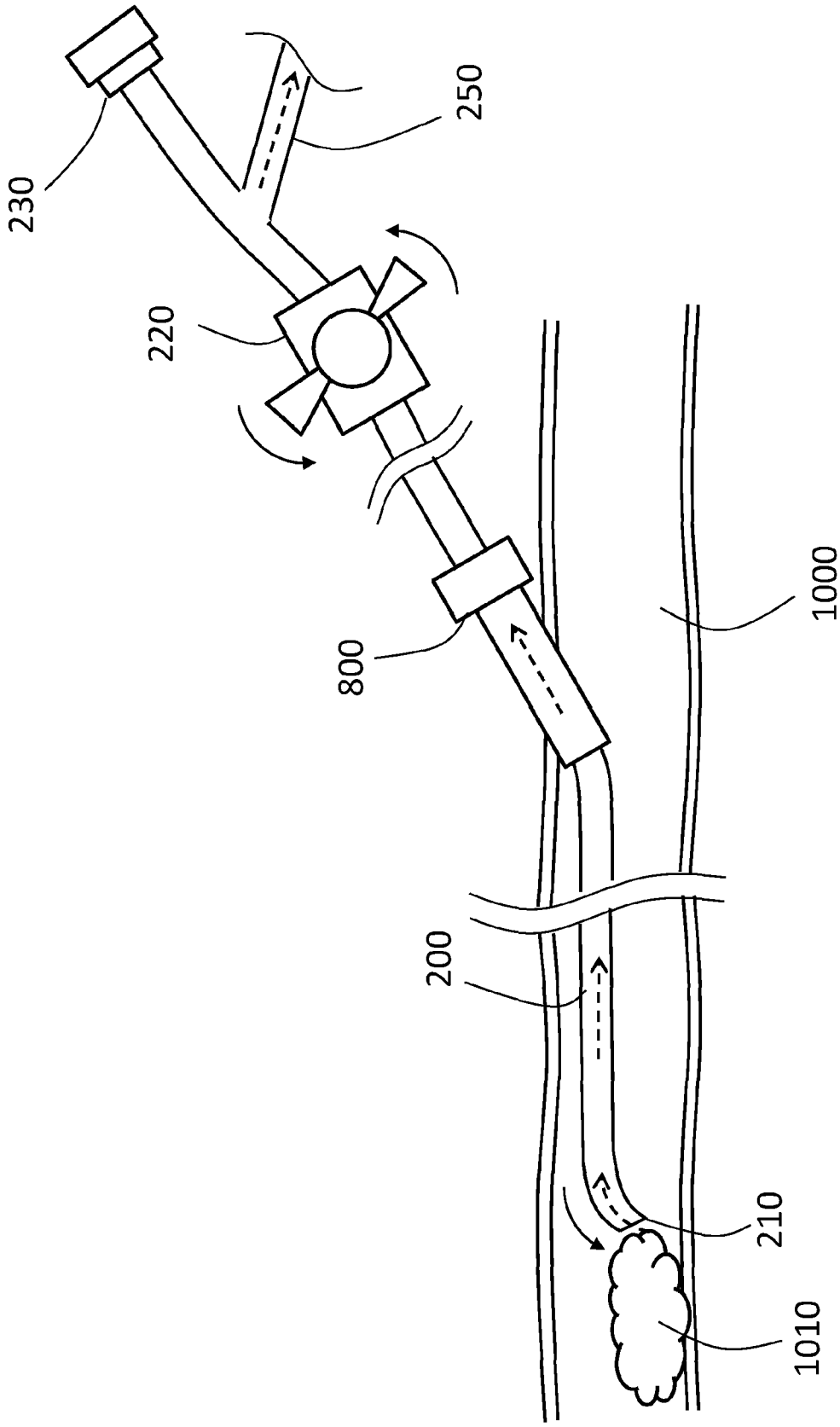

FIG. 7

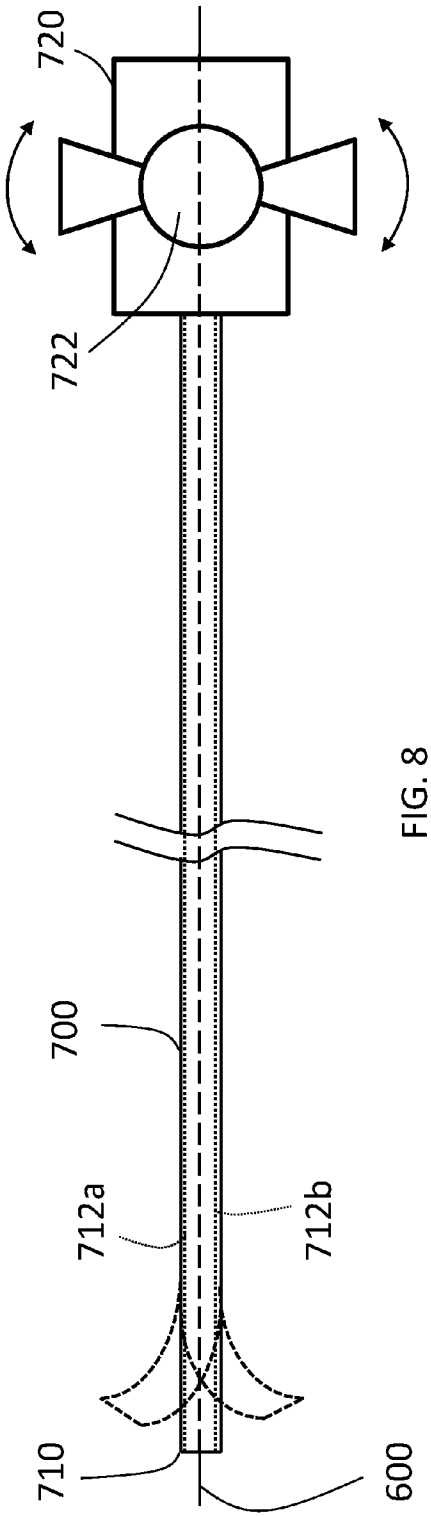
720
722
700
712a
712b
710
600

FIG. 8

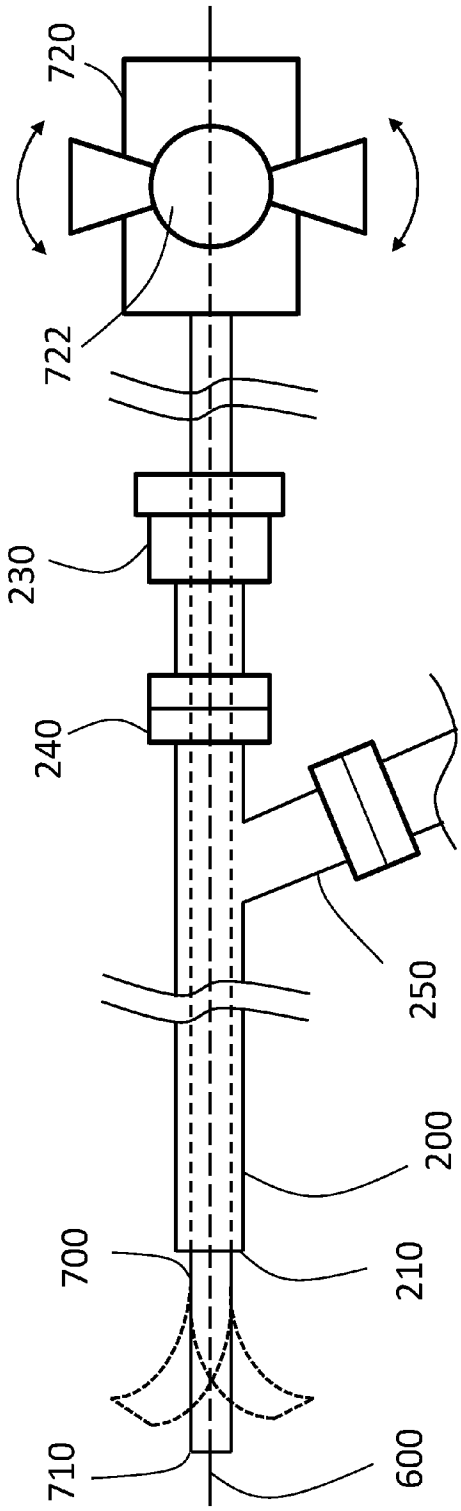
720
722
230
240
250
200
700
210
710
600

FIG. 9

STEERABLE ASPIRATION CATHETER SYSTEM

CROSS-REFERENCE TO RELATED APPLICATIONS

[0001] This application claims priority to and the benefit of U.S. Provisional Patent Application No. 62/204,089, filed Aug. 12, 2015, which is incorporated herein by reference in its entirety.

FIELD OF THE INVENTION

[0002] The present invention, according to some embodiments, relates to a system for removing material from a patient's body. In some embodiments, the present invention relates to a system for aspirating, filtering and/or oxygenating a patient's blood. In some embodiments, the present invention relates to steerable catheter and a system incorporating the same. More particularly, the present invention in some embodiments relates to a steerable aspiration catheter system which is configured to remove material from the body of a patient, for example, unwanted material such as emboli, thrombi, tumors, or debris. In further embodiments, the present invention relates to an aspiration catheter system that is configured to return aspirated blood to the patient.

BACKGROUND OF THE INVENTION

[0003] Thrombi within a person's vascular system can form as a result of any one of a number of causes, including disease, infections, trauma, surgery, stagnant blood, and foreign articles implanted in the vasculature. For example vascular disease, which annually affects a large number of individuals, often leads to the development of clots in the vascular system. These clots are usually comprised of an aggregated mixture of thrombus and fibrin and, if left untreated, may result in deep vein thrombosis, embolisms, or ischemia.

[0004] A thrombus present in a person's arterial system tends to move in the direction of blood flow from a large diameter artery to smaller diameter arteries and may continue to migrate until it becomes lodged against a vessel wall. In some instances, the thrombus partially or entirely blocks the flow of blood through the artery, thereby reducing or denying the supply of blood to tissue which is located downstream of the thrombus. Cutting off the flow of blood for an extended period of time may lead to damage or death of the tissue, possibly resulting in the loss of extremities in some cases. In other severe cases, a thrombus can migrate to the vessels of the brain and cause stroke and possibly death. Moreover, in a person's venous system, clots can migrate to the lungs and block the lungs main artery, resulting in a potentially fatal pulmonary embolism.

SUMMARY OF THE INVENTION

[0005] The present invention according to certain embodiments provides a system for removing thrombi and other unwanted material from the body of a patient, particularly from the patient's vasculature. As used herein, a patient may refer to a human patient, or in other embodiments, patient may also refer to non-human animals, for example, veterinary patients. In some embodiments, systems according to the present invention may be suited for thrombectomy and/or embolectomy procedures. Systems according to certain embodiments of the present invention may be used, for example, to remove clots from patients suffering from or at risk of pulmonary embolisms. In some embodiments, a system of the present invention is configured to aspirate thrombi and/or other unwanted material from the patient's vasculature. In some further embodiments, a system according to the present invention may be configured to add oxygen to and/or remove carbon dioxide from a patient's blood. In some embodiments, the system is further configured to return aspirated blood to the patient which, for example, allows for greater suction pressures and/or flow rates according to certain embodiments. In yet further embodiments, a system according to the present invention includes a steerable catheter to allow for directed aiming at the unwanted material.

[0006] In some embodiments, the system includes an aspiration catheter insertable into the patient having a distal end with a steerable tip configured to bend in one or more directions. In some embodiments, the system further includes a controller coupled to the aspiration catheter proximal to the distal end and operable by a user (e.g., surgeon) to manipulate and bend the steerable tip in the one or more directions. In some embodiments, the aspiration catheter includes one or more steering wires connected to the steerable tip, the controller configured to selectively apply tension on the one or more steering wires to bend the steerable tip in the one or more directions. In other embodiments, the aspiration catheter does not include a steering mechanism.

[0007] In further embodiments, the system includes a pump having an inlet port configured to be in fluid communication with the aspiration catheter. A filter device may be positioned between the aspiration catheter and the pump, the filter device configured to trap solid material (e.g., thrombi) received in the aspiration catheter from the body of the patient. The pump may also include a discharge port, the pump being configured to generate a negative pressure at the inlet port and a positive pressure at the discharge port during use. In yet other embodiments, the system includes a return catheter configured to be in fluid communication with the discharge port of the pump to return aspirated blood to the patient. The return catheter, in some embodiments, may or may not also include a steerable tip that is configured to bend in one or more directions in response to a controller. In some embodiments, the system may include an oxygenator configured to oxygenate the aspirated blood prior to returning the aspirated blood to the patient. In some such embodiments, the oxygenator is further configured to remove carbon dioxide from the aspirated blood.

[0008] In certain embodiments, the system includes at least one working port configured to allow insertion of one or more devices into or through the aspiration catheter. In some embodiments, the at least one working port is removably connected to the controller and/or aspiration catheter by a connector. The connector may be, for example, a quick connect fitting. In some embodiments, the at least one working port provides a fluid tight seal around the one or more devices when the one or more devices are inserted into the aspiration catheter. The one or more devices may include, for example, guidewires, stylets, balloon catheters, diagnostic catheters, baskets, optical fibers, thrombolysis tools, needles, cutters, biopsy devices, and other surgical implements known in the art. In some embodiments, the at least one working port includes a Tuohy Borst adaptor. In further embodiments, the system includes a plurality of

working ports. Each of the plurality of working ports may be adapted to accept devices of different sizes. Moreover, each of the plurality of working ports may be removably connected to the controller and/or aspiration catheter via a separate connector.

[0009] In further embodiments, the present invention provides a stylet that is configured for use in positioning the aspiration catheter, the return catheter, and/or other catheters and cannulas. The stylet in some embodiments includes an elongate portion sized to fit within a lumen of the catheter or cannula. In some embodiments, the stylet further includes a steerable tip that is configured to bend in one or more directions. In some embodiments, the stylet includes a controller that is operable by a user to bend the steerable tip of the stylet in the one or more directions to help maneuver the stylet and catheter through a patient's vascular system during use.

BRIEF DESCRIPTION OF THE DRAWINGS

[0010] The foregoing summary, as well as the following detailed description of the invention, will be better understood when read in conjunction with the appended drawings. For the purpose of illustrating the invention, there are shown in the drawings embodiments which are presently preferred. It should be understood, however, that the invention can be embodied in different forms and thus should not be construed as being limited to the embodiments set forth herein. Furthermore, unless noted otherwise, the appended drawings may not be drawn to scale.

[0011] FIG. **1**A is a diagram illustrating a system for removing material from a patient's body in accordance with an embodiment of the present invention;

[0012] FIG. **1**B is a diagram illustrating a steerable aspiration catheter system according to a further embodiment of the present invention;

[0013] FIG. **1**C is a diagram illustrating a steerable aspiration catheter system according to a further embodiment of the present invention;

[0014] FIG. **1**D is a diagram illustrating a steerable aspiration catheter system according to a further embodiment of the present invention;

[0015] FIG. **2** is a diagram illustrating a steerable aspiration catheter which may be used in the system shown in FIGS. **1**A-**1**C in accordance with an embodiment of the present invention;

[0016] FIGS. **3**A-**3**D are diagrams illustrating alternative distal tip configurations for a steerable aspiration catheter in accordance with embodiments of the present invention.

[0017] FIG. **4** is a diagram illustrating the steerable aspiration catheter of FIG. **2** receiving a guidewire and a stylet in accordance with an embodiment of the present invention;

[0018] FIG. **5** is a diagram illustrating multiple working ports in accordance with an embodiment of the present invention;

[0019] FIG. **6** is a diagram illustrating insertion of the steerable aspiration catheter into a vein in accordance with an embodiment of the present invention;

[0020] FIG. **7** is a diagram illustrating the positioning of the steerable aspiration catheter proximate a thrombus in accordance with an embodiment of the present invention;

[0021] FIG. **8** is a diagram illustrating a steerable stylet in accordance with an embodiment of the present invention; and

[0022] FIG. **9** is a diagram illustrating the steerable stylet of FIG. **7** positioned within a catheter in accordance with an embodiment of the present invention.

DETAILED DESCRIPTION

[0023] The present subject matter will now be described more fully hereinafter with reference to the accompanying figures and examples, in which representative embodiments are shown. The present subject matter can, however, be embodied in different forms and should not be construed as limited to the embodiments set forth herein. Rather, these embodiments are provided to describe and enable one of skill in the art. All publications, patent applications, patents, and other references mentioned herein are incorporated by reference in their entirety.

[0024] Referring to the drawings in detail, wherein like reference numerals indicate like elements throughout, there is shown in FIG. **1**A a system, generally designated **100**, for removing material from a patient's body in accordance with an exemplary embodiment of the present invention. In some embodiments, system **100** generally includes an aspiration catheter **200** configured to be inserted into the patient's body (e.g., into a vein or artery) and aspirate blood and other material (e.g., thrombi), a pump **400** for providing suction pressure to aspiration catheter **200**, and a return catheter **500** for returning aspirated blood to the patient. More particularly, aspiration catheter **200** is arranged in fluid communication with inlet port **410** of pump **400** via fluid path **250** while return catheter **500** is in fluid communication with discharge port **420** of pump **400** such that, during use, blood from the patient is aspirated from a vein or artery through aspiration catheter **200** and fluid path **250** into inlet port **410** of pump **400** and expelled through discharge port **420** and return catheter **500** back to the patient. Return catheter **500** may be inserted into either a vein or artery of the patient during use. Accordingly, in some embodiments, system **100** is configured to form a complete circuit with the patient's cardiovascular system. In some embodiments, only aspiration catheter **200** and return catheter **500** are inserted into the patient's body during aspiration while the other components of system **100** (e.g., fluid path **250**, pump **400**) remain outside the patient's body. In further embodiments, system **100** also includes a filter **300**, which may be positioned anywhere in fluid communication between aspiration catheter **200** and return catheter **500**. In some embodiments, filter **300** is disposed between aspiration catheter **200** and pump **400** along fluid path **250** so as to separate any solid materials from the aspirated blood (e.g., thrombi, emboli, tumor tissue, etc.) before the aspirated blood enters pump **400**. In other embodiments, a filter may be integrated into aspiration catheter **200** and/or pump **400**.

[0025] In some further embodiments, system **100** may include one or more other components which are configured to modify the aspirated blood before returning the blood to the patient. Referring to FIG. **1**B, in some embodiments, for example, system **100** may include an oxygenator **330** which is configured to add oxygen to the aspirated blood before returning the blood to the patient. System **100** may be used, for example, to remove low-oxygen blood from the patient using aspiration catheter **200**, add oxygen to the low-oxygen blood using oxygenator **330**, and return the oxygenated blood to the patient via return catheter **500**. Oxygenator **330** may also be configured to remove carbon dioxide from the aspirated blood in some embodiments. Oxygenator **330** may

have any suitable configuration known in the art for adding oxygen to the blood. In one embodiment, for example, oxygenator **330** may include a membrane that is permeable to gas but impermeable to blood which is configured to allow oxygen to diffuse from an oxygen-containing gas (e.g., medical air) into the blood while carbon dioxide diffuses out of the blood into the gas for removal. In some such embodiments, system **100** may be particularly useful for extracorporeal membrane oxygenation (ECMO) procedures and/or heart assist procedures (e.g., right heart assist procedures). For example, in one embodiment, aspiration catheter **200** may be positioned to aspirate blood from a patient's vein (e.g., right common femoral vein) during use while return catheter **500** is inserted in either a vein (e.g., right internal jugular vein) or artery (e.g., right femoral artery) to return the aspirated blood to the patient after being modified by oxygenator **300**. Oxygenator **330** may be positioned anywhere in fluid communication between aspiration catheter **200** and the end of return catheter **500**, for example, along fluid path **250** between aspiration catheter **200** and inlet port **410** of pump **400** as illustrated. The blood oxygenator could alternatively be positioned between discharge port **420** of pump **400** and return catheter **500** in other embodiments. In yet other embodiments, oxygenator **330** and pump **400** could be integrated as a single device. System **100** shown in FIG. **1**B may or may not include filter **300** discussed above in connection with FIG. **1**A.

[0026] In further embodiments, system **100** may also include one or more infusion pumps (not shown) which are configured to introduce drugs, fluids, nutrients and/or other substances into the aspirated blood before the aspirated blood is returned to the patient via return catheter **500**. Such infusion pumps may be connected to the system anywhere between aspiration catheter **200** and return catheter **500**. In some embodiments, fluid path **250** or return catheter **500** may include one or more ports (not shown) which may be connected to an infusion pump and configured to receive material from the infusion pump for introduction into the aspirated blood. In yet other embodiments, system **100** may also include a temperature regulation device (e.g., heat exchanger) for modifying the temperature of the aspirated blood prior to returning the aspirated blood to the patient. In some embodiments, for example, blood may cool after it is aspirated from the patient's body. In some situations it may desirable to return the temperature of the aspirated blood towards normal body temperature (about 37° C.) before it returns to the patient. In some embodiments therefore, system **100** may include a heater or heat exchanger positioned along fluid path **250** and/or return catheter **500** that is configured to warm the aspirated blood.

[0027] Aspiration catheter **200** is preferably configured as an elongated tube which should be sufficiently flexible to allow for maneuverability through a patient's vasculature while also being stiff enough so as not to collapse under suction pressure from pump **400**. In some embodiments, aspiration catheter **200** may be made from any material suitable for the manufacture of catheters. In some embodiments, aspiration catheter is made from a biocompatible polymer, for example, polyvinyl chloride, polyethylene, polypropylene, polyurethane, silicone, or combinations thereof. In some embodiments, aspiration catheter **200** may include reinforcing elements, for example, wires, coils, or ribs to prevent collapse during use.

[0028] In some embodiments, aspiration catheter **200** has a French size of at least 5 Fr. In some embodiments, aspiration catheter **200** has a French size of at least 6 Fr. In some embodiments, aspiration catheter **200** has a French size of at least 7 Fr. In some embodiments, aspiration catheter **200** has a French size of at least 8 Fr. In some embodiments, aspiration catheter **200** has a French size of at least 9 Fr. In some embodiments, aspiration catheter **200** has a French size of at least 10 Fr. In some embodiments, aspiration catheter **200** has a French size of at least 11 Fr. In some embodiments, aspiration catheter **200** has a French size of at least 12 Fr. In some embodiments, aspiration catheter **200** has a French size of at least 13 Fr. In some embodiments, aspiration catheter **200** has a French size of at least 14 Fr. In some embodiments, aspiration catheter **200** has a French size of at least 15 Fr. In some embodiments, aspiration catheter **200** has a French size of at least 16 Fr. In some embodiments, aspiration catheter **200** has a French size of at least 17 Fr. In some embodiments, aspiration catheter **200** has a French size of at least 18 Fr. In some embodiments, aspiration catheter **200** has a French size of at least 19 Fr. In some embodiments, aspiration catheter **200** has a French size of at least 20 Fr. In some embodiments, aspiration catheter **200** has a French size of 8 Fr to 12 Fr. In some embodiments, aspiration catheter **200** has a French size of 9 Fr to 11 Fr. In certain preferred embodiments, aspiration catheter has a French size of equal to or greater than 10 Fr to allow for aspiration of large thrombi and/or other solid materials from the patient.

[0029] In some embodiments, aspiration catheter **200** has a lumen diameter of at least 1 mm. In some embodiments, aspiration catheter **200** has a lumen diameter of at least 2 mm. In some embodiments, aspiration catheter **200** has a lumen diameter of at least 3 mm. In some embodiments, aspiration catheter **200** has a lumen diameter of at least 4 mm. In some embodiments, aspiration catheter **200** has a lumen diameter of at least 5 mm. In some embodiments, aspiration catheter **200** has a lumen diameter of 1 mm to 5 mm. In some embodiments, aspiration catheter **200** has a lumen diameter of 2 mm to 4 mm. In some embodiments, aspiration catheter **200** has a lumen diameter of equal to or greater than 3 mm.

[0030] Aspiration catheter **200**, in certain preferred embodiments, is a steerable aspiration catheter. For example, in some embodiments, aspiration catheter **200** includes one or more steering wires which may extend along at least a portion of the length of aspiration catheter **200** to distal tip **210**. In some embodiments, aspiration catheter **200** includes at least one pair of steering wires. In some embodiments, aspiration catheter **200** includes at least two pairs of steering wires. In some embodiments, aspiration catheter **200** includes at least three pairs of steering wires. In some embodiments, aspiration catheter **200** includes at least four pairs of steering wires. In some embodiments, aspiration catheter **200** includes at least five pairs of steering wires. In some embodiments, aspiration catheter **200** includes at least six pairs of steering wires. These steering wires may be positioned on the outside of aspiration catheter **200**, inside the lumen of aspiration catheter **200**, or within the walls of aspiration catheter **200**. Each pair of steering wires may include diametrically opposed steering wires. By applying tension to selected steering wires, it is possible to cause distal tip **210** to bend in one or more directions. In some embodiments, being able to steer distal tip **210** of aspiration

catheter **200** allows for better aiming of aspiration catheter towards the material to be removed from the patient (e.g., thrombi).

[0031] Referring now to FIG. **2**, in some embodiments aspiration catheter **200** includes a distal tip **210** which is configured to bend in one or more directions in response to a controller **220** positioned proximally away from distal tip **210**. Controller **220** may be configured to apply tension to one or more steering wires (e.g., **218***a*, **218***b*) which extend from controller **220** and are connected to distal tip **210**. In some embodiments, steering wires **218***a* and **218***b* are positioned on the outside of aspiration catheter **200**, inside the lumen of aspiration catheter **200**, or within the walls of aspiration catheter **200**. In some embodiments, steering wires **218***a* and **218***b* are diametrically opposed to each other. In some embodiments, controller **220** is positioned at a proximal end of aspiration catheter **200**, opposite of distal tip **210**. In some embodiments, controller **220** is mechanically coupled to aspiration catheter **200**. In some embodiments, aspiration catheter **200** is partially received inside of controller **220**. In some embodiments, controller **220** is configured as or includes a handle that is sized to be grasped by a user's hand.

[0032] Controller **220**, in some embodiments, includes a dial or knob **222** which can be operated by a user (e.g., surgeon) to bend distal tip **210** in the one or more directions. For example, rotating dial or knob **222** clockwise may cause distal tip **210** to bend in a first direction d**1** whereas rotating dial or knob **222** counterclockwise may cause distal tip **210** to bend in a second direction d**2** which is opposite of first direction d**1**. For example, rotation of dial or knob **222** clockwise may pull steering wire **218***a* and/or push steering wire **218***b* causing distal tip **210** to bend in first direction d**1**. Rotation of dial or knob **222** counterclockwise may pull steering wire **218***b* and/or push steering wire **218***a* causing distal tip **210** to bend in second direction d**2**. Aspiration catheter **200** may include additional pairs of opposing steering wires to allow for bending in directions other than the ones illustrated for simplicity. It should be understood that controller **220** may also include additional dials or knobs to allow for bending of distal tip **210** in further directions not illustrated. It should also be appreciated that while controller **220** includes a dial or knob **222** in the illustrated embodiment for simplicity, other mechanisms such as levers, triggers, switches, thumbwheels, joysticks, buttons, slides, etc. could be used to operate controller **220** to steer distal tip **210**. An example steering mechanism that may be adapted to the present system according to some embodiments is included in the DESTINO™ guiding sheath available from OSCOR®.

[0033] In some embodiments, distal tip **210** is configured to bend from 0 degrees to about 10 degrees in one or more directions in response to operation of controller **220**. In some embodiments, distal tip **210** is configured to bend from 0 degrees to about 15 degrees in one or more directions in response to operation of controller **220**. In some embodiments, distal tip **210** is configured to bend from 0 degrees to about 20 degrees in one or more directions in response to operation of controller **220**. In some embodiments, distal tip **210** is configured to bend from 0 degrees to about 25 degrees in one or more directions in response to operation of controller **220**. In some embodiments, distal tip **210** is configured to bend from 0 degrees to about 30 degrees in one or more directions in response to operation of controller **220**. In some embodiments, distal tip **210** is configured to bend from 0 degrees to about 40 degrees in one or more directions in response to operation of controller **220**. In some embodiments, distal tip **210** is configured to bend from 0 degrees to about 45 degrees in one or more directions in response to operation of controller **220**. In some embodiments, distal tip **210** is configured to bend from 0 degrees to about 50 degrees in one or more directions in response to operation of controller **220**. In some embodiments, distal tip **210** is configured to bend from 0 degrees to about 60 degrees in one or more directions in response to operation of controller **220**. In some embodiments, distal tip **210** is configured to bend from 0 degrees to about 65 degrees in one or more directions in response to operation of controller **220**. In some embodiments, distal tip **210** is configured to bend from 0 degrees to about 70 degrees in one or more directions in response to operation of controller **220**. In some embodiments, distal tip **210** is configured to bend from 0 degrees to about 75 degrees in one or more directions in response to operation of controller **220**. In some embodiments, distal tip **210** is configured to bend from 0 degrees to about 80 degrees in one or more directions in response to operation of controller **220**. In some embodiments, distal tip **210** is configured to bend from 0 degrees to about 85 degrees in one or more directions in response to operation of controller **220**. In some embodiments, distal tip **210** is configured to bend from 0 degrees to about 90 degrees in one or more directions in response to operation of controller **220**. In some embodiments, distal tip **210** is configured to bend from 0 degrees to about 100 degrees in one or more directions in response to operation of controller **220**. In some embodiments, distal tip **210** is configured to bend from 0 degrees to about 135 degrees in one or more directions in response to operation of controller **220**. In some embodiments, distal tip **210** is configured to bend from 0 degrees to about 180 degrees in one or more directions in response to operation of controller **220**. In some embodiments, distal tip **210** is configured to bend no more than 90 degrees in any one direction. In some embodiments, distal tip **210** is configured to bend no more than 135 degrees in any one direction. In some embodiments, distal tip **210** is configured to bend no more than 180 degrees in any one direction.

[0034] While FIG. **2** illustrates distal tip **210** as having a substantially flat end surface, distal tip **210** need not have such a configuration in other embodiments. Furthermore, distal tip **210** may be made from or include a different material than the rest of aspiration catheter **200**. For example, distal tip **210** may be made from a more flexible or elastic material. FIGS. **3**A-**3**D show other optional configurations that distal tip **210** may have. For example, FIG. **3**A shows distal tip **210***a* as having a tapered or pointed end surface. FIG. **3**B shows distal tip **210***b* which may be provided with a radiopaque marker **212** to allow for visualization of aspiration catheter **200** by radiographic imaging during use which permits the user (e.g., surgeon) to see the position of distal tip **210***b* within the patient's body. FIG. **3**C illustrates an example distal tip **210***c* provided with a flared end or funnel **214** which may be deployed during use to help collect material during aspiration. Similarly, FIG. **3**D shows an example distal tip **210***d* having a cup **216** which may be deployed during use to assist with material collection. It should be understood that funnel **214** and cup **216** need not be integral with aspiration catheter **200** and that they may be separate components which may be added to distal tip **210**.

In yet other embodiments, system **100** may exclude a funnel or cup on aspiration catheter **200**. Other catheter end configurations and/or attachments may also be used with aspiration catheter **200**. Preferably only end configurations which would not prevent or substantially interfere with the steering function of distal tip **210** are included.

[0035] Referring again to FIGS. **1**A, **1**B, and **2**, extending proximally from controller **220** is a working port **230** according to some embodiments of the present invention. In some embodiments, working port **230** may be axially aligned with controller **220** and/or aspiration catheter **200**. In some embodiments, working port **230** allows insertion of instruments into and/or through the lumen of aspiration catheter **200**, such as, for example, guidewire **600** which may be used to assist with inserting aspiration catheter **200** into the patient's vasculature and directing aspiration catheter **200** to the location of the material to be removed. As further shown in FIG. **4**, stylet **700** may also be inserted through aspiration catheter **200** via working port **230**. Stylet **700** is an elongate tube which, in some embodiments provides a transition between the larger diameter aspiration catheter **200** and the smaller diameter guidewire **600**. In further embodiments, stylet **700** helps provide rigidity to aspiration catheter **200** to help with insertion of aspiration catheter **200** through the patient's vasculature. In some embodiments, a plurality of coaxial stylets may be used. As depicted in the illustrated embodiments, guidewire **600** and stylet **700** have lengths which are greater than the length of aspiration catheter **200** and are configured to extend completely through working port **230**, controller **220**, and aspiration catheter **200** during use. Other devices not shown which may be inserted through aspiration catheter **200** via working port **230** include but are not limited to other wires, balloon catheters, diagnostic catheters, baskets, optical fibers, thrombolysis tools, needles, cutters, biopsy devices, and other surgical implements known in the art. In some embodiments, working port **230** may also be used to introduce additional fluids and/or medicaments into system **100**.

[0036] In certain embodiments, working port **230** is configured to provide a fluid tight seal around stylet **700** or other device inserted through working port **230**, for example, so as to prevent leakage of blood out of working port **230** during use. For example, working port **230** may include an o-ring seal that is sized to form a tight seal with stylet **700** or other tool inserted through working port **230**. In some embodiments, working port **230** includes or is configured as a Tuohy-Borst adapter. In some embodiments, working port **230** may have an adjustable opening diameter to accommodate tools of different sizes. For example, working port **230** may be configured as a chuck, collet, adjustable collar, or other radial clamp. In yet further embodiments, working port **230** may include a valve to close working port **230** when not in use.

[0037] In some embodiments, working port **230** may be connected to controller **220** by a connector **240** which allows working port **230** to be detached and/or replaced. In some embodiments, connector **240** allows for working ports **230** which can accommodate different tools and devices to be exchanged. For example, a working port **230** which can accommodate tools of a particular size can be disconnected at connector **240** and exchanged for a different working port which can accommodate larger or smaller tools. In some embodiments, a plurality of different working ports **230**, each of which being connectable to connector **240**, may be provided as a kit for example. In some embodiments, connector **240** may be a quick connect fitting, threaded fitting, flanged fitting, or other tube fitting known in the art.

[0038] In yet further embodiments, system **100** may include more than one working port **230**. In some embodiments, system **100** includes a plurality of working ports **230** so as to accommodate different tools and devices. FIG. **5** illustrates an embodiment having a second working port **232** in addition to working port **230**, which may be connected via connector **242**. Connector **242** may have a similar configuration as connector **240**. As further shown in FIG. **5**, working port **230** may receive guidewire **600** or other first tool while second working port **232** receives second guidewire **602** or other second tool. It should be understood that other embodiments may include additional working ports and that the total number of working ports is not limited to the illustrated embodiments. In some embodiments, system **100** includes at least one, at least two, at least three, or at least four working ports. Each of the one or more working ports may be the same or different in configuration. For example, working port **232** may be configured to have a different diameter than working port **230** such that working ports **230** and **232** can accommodate tools or devices of different sizes. Furthermore, each of the additional working ports can be connected via a separate connector which may be configured the same as connectors **240** and/or **242**. By having connectors with the same or similar configurations, the different working ports may be interchanged with each other according to certain embodiments. In some embodiments, working ports **230** and **232** can be interchanged, for example, where working port **230** may be connected via connector **242** and second working port **232** can be connected via working port **240**.

[0039] Referring again to FIGS. **1**A and **1**B, system **100** includes a fluid path **250** that places aspiration catheter **200** in fluid communication with inlet port **410** of pump **400**. Fluid path **250** may be defined by an elongate tube which may be integral with or separable from aspiration catheter **200** according to certain embodiments. In some embodiments, for example, fluid path **250** may optionally connect with aspiration catheter **200** via a separate connector (e.g., connector **252**) which may allow detachment of fluid path **250** from aspiration catheter **200**. In some embodiments, the separate connector **252** may have a configuration similar to connector **240** and/or **242**. In other embodiments, connector **252** may have a different configuration (e.g., different size) than connector **240** and/or **242**. In some embodiments, fluid path **250** is continuous with aspiration catheter **200**. While FIG. **1** depicts fluid path **250** as connecting to a location between controller **220** and connector **240**, in other embodiments fluid path **250** may connect with aspiration catheter **200** at a position between distal tip **210** and controller **220**. In yet other embodiments, fluid path **250** may connect at controller **220**. Furthermore, it should be understood that in some alternative embodiments, the positions of fluid path **250** and working port **230** as shown in FIG. **1** may be switched such that fluid path **250** is axially aligned with controller **220** and/or aspiration catheter **200** while working port **230** branches in a different direction. For example, in some embodiments, fluid path **250** may connect at connector **240** while working port **230** connects at connector **252**.

[0040] As shown in FIG. **1**A, system **100** may be provided with a filter **300** according to some embodiments. In some embodiments, aspiration catheter **200** includes a filtering device. In some embodiments, filter **300** may be positioned

anywhere downstream from distal tip **210** of aspiration catheter **200**. In some embodiments, filter **300** may be positioned between aspiration catheter **200** and pump **400** along fluid path **250**. In some embodiments, filter **300** is configured to trap solid material received through aspiration catheter **200** from the body of the patient during use. For example, filter **300** is configured to trap thrombi, emboli, tumor tissue, debris or other materials aspirated from the patient's body using system **100**. Any suitable filtering apparatus known in the art may be used according to some embodiments. In some embodiments, filter **300** includes a housing **310** containing at least one separator **320** configured to separate the solid materials from the aspirated blood. Separator **320**, in some embodiments, may be a screen, mesh, membrane, etc., that is configured to allow blood or other fluid to flow through while preventing passage of the solid materials. Blood which passes through separator **320** may then be suctioned through the remainder of fluid path **250** and into pump **400** through inlet port **410**. Meanwhile, the solid materials collected within housing **310** of filter **300** can then be subsequently disposed of or retrieved for additional analysis. In other embodiments, pump **400** itself may include a filtering device. In yet other embodiments, filter **300** may be positioned downstream from pump **400** (e.g., along return catheter **500** or between pump **400** and return catheter **500**). In some embodiments, filter **300** may be positioned anywhere between distal tip **210** of aspiration catheter **200** and the end of return catheter **500**.

[0041] Pump **400**, according to certain embodiments, is configured to create a suction force to drive system **100** during use. In preferred embodiments, pump **400** is a centrifugal pump. In other embodiments, pump **400** may be a rotary pump, peristaltic pump, roller pump, or other form of pump known in the art. In some embodiments, pump **400** may be controlled by a console **430** via communication pathway **432**. Communication pathway **432** may be a hard-wired electrical pathway, for example. In alternative embodiments, communication pathway **432** may be a wireless connection. In some embodiments, console **430** may be operated by the user (e.g., surgeon) to adjust the speed, pressure, or other attributes of pump **400** during use. In some embodiments, console **430** includes a control panel **434** which may receive input from the user to control pump **400**. For example, control panel **434** may include one or more controls **436** (e.g., dials, touch screens, buttons, levers, etc.) for adjusting pump speed or other pump variable. Control panel **434** may also include other components such as, for example, one or more displays **438** (e.g., LCD display) that indicate pump speed, pressure or other values. In some embodiments, console **430** is a computer which may receive input from the user via a keyboard, mouse, etc. In some embodiments, console **430** and pump **400** may integrated as a single device.

[0042] Pump **400** is preferably configured to generate a negative (suction) pressure at inlet port **410** sufficient to cause aspiration of the patient's blood through aspiration catheter **200** during use. In some embodiments, pump **400** is capable of producing negative pressures from 0 mmHg to about −100 mmHg. In some embodiments, pump **400** is capable of producing negative pressures from 0 mmHg to about −150 mmHg. In some embodiments, pump **400** is capable of producing negative pressures from 0 mmHg to about −200 mmHg. In some embodiments, pump **400** is capable of producing negative pressures from 0 mmHg to about −250 mmHg. In some embodiments, pump **400** is capable of producing negative pressures from 0 mmHg to about −300 mmHg. In some embodiments, pump **400** is capable of producing negative pressures from 0 mmHg to about −350 mmHg. In some embodiments, pump **400** is capable of producing negative pressures from 0 mmHg to about −400 mmHg.

[0043] In some embodiments, pump **400** is configured to generate a blood flow rate of at least 100 mL/min through aspiration catheter **200**. In some embodiments, pump **400** is configured to generate a blood flow rate of at least 200 mL/min through aspiration catheter **200**. In some embodiments, pump **400** is configured to generate a blood flow rate of at least 300 mL/min through aspiration catheter **200**. In some embodiments, pump **400** is configured to generate a blood flow rate of at least 400 mL/min through aspiration catheter **200**. In some embodiments, pump **400** is configured to generate a blood flow rate of at least 500 mL/min through aspiration catheter **200**. In some embodiments, pump **400** is configured to generate a blood flow rate of at least 600 mL/min through aspiration catheter **200**. In some embodiments, pump **400** is configured to generate a blood flow rate of at least 700 mL/min through aspiration catheter **200**. In some embodiments, pump **400** is configured to generate a blood flow rate of at least 800 mL/min through aspiration catheter **200**. In some embodiments, pump **400** is configured to generate a blood flow rate of at least 900 mL/min through aspiration catheter **200**. In some embodiments, pump **400** is configured to generate a blood flow rate of at least 1000 mL/min through aspiration catheter **200**. In some embodiments, pump **400** is configured to generate a blood flow rate of at least 1100 mL/min through aspiration catheter **200**. In some embodiments, pump **400** is configured to generate a blood flow rate of at least 1200 mL/min through aspiration catheter **200**. In some embodiments, pump **400** is configured to generate a blood flow rate of at least 1300 mL/min through aspiration catheter **200**. In some embodiments, pump **400** is configured to generate a blood flow rate of at least 1400 mL/min through aspiration catheter **200**. In some embodiments, pump **400** is configured to generate a blood flow rate of at least 1500 mL/min through aspiration catheter **200**. In some embodiments, pump **400** is configured to generate a blood flow rate of at least 1600 mL/min through aspiration catheter **200**. In some embodiments, pump **400** is configured to generate a blood flow rate of at least 1700 mL/min through aspiration catheter **200**. In some embodiments, pump **400** is configured to generate a blood flow rate of at least 1800 mL/min through aspiration catheter **200**. In some embodiments, pump **400** is configured to generate a blood flow rate of at least 1900 mL/min through aspiration catheter **200**. In some embodiments, pump **400** is configured to generate a blood flow rate of at least 2000 mL/min through aspiration catheter **200**. In some embodiments, pump **400** is configured to generate a blood flow rate of at least 3000 mL/min through aspiration catheter **200**. In some embodiments, pump **400** is configured to generate a blood flow rate of at least 4000 mL/min through aspiration catheter **200**. In some embodiments, pump **400** is configured to generate a blood flow rate of at least 5000 mL/min through aspiration catheter **200**.

[0044] In some embodiments, pump **400** is configured to generate a blood flow rate of about 100 mL/min to about 6000 mL/min through aspiration catheter **200**. In some embodiments, pump **400** is configured to generate a blood

flow rate of about 1000 mL/min to about 5000 mL/min through aspiration catheter **200**. In some embodiments, pump **400** is configured to generate a blood flow rate of about 1500 mL/min to about 4500 mL/min through aspiration catheter **200**. In some embodiments, pump **400** is configured to generate a blood flow rate of about 2000 mL/min to about 4000 mL/min through aspiration catheter **200**. In some embodiments, pump **400** is configured such that the generated flow rate may be ramped up from 0 mL/min to the desired flow rate during use (e.g., via console **430**).

[0045] In further embodiments, pump **400** includes a discharge port **420** separate from inlet port **410**. Pump **400** is configured to generate a positive pressure at discharge port **420** such that the aspirated blood received through inlet port **410** is expelled through discharge port **420** during use. The aspirated blood or other fluids are typically expelled through discharge port **420** at about the same flow rate as the flow rate into pump **400** through inlet port **410**. As shown in FIG. **1**, system **100** may include a return catheter **500** in fluid communication with discharge port **420**. In some embodiments, return catheter **500** is configured to carry aspirated blood expelled from discharge port **420** back to the patient. By returning the aspirated blood back to the patient, embodiments of the present system **100** allows for aspiration while minimizing the blood loss of the patient. In certain embodiments, reinfusing the patient's blood continuously during aspiration allows for greater suction pressure and/or flow rates (e.g., 2-4 L/min) which can assist in dislodging and removing larger clots and/or tumors than would otherwise be possible. Without returning the blood back to the patient, such high flow rates could quickly result in exsanguination of the patient. Return catheter **500** in some embodiments is an elongate, flexible tube which is particularly configured to be inserted into the patient's vasculature. In some embodiments, return catheter **500** may be inserted into the patient's peripheral venous system. In other embodiments, return catheter **500** may be inserted into the patient's arterial system. Return catheter **500** may be inserted into the patient's vascular system with the aid of a guidewire and/or stylet as described herein in connection with aspiration catheter **200**. For example, a guidewire and/or stylet having a configuration as guidewire **600** and/or stylet **700** may be used for positioning return catheter **500** in the desired location within the patient's vascular system. The guidewire and/or stylet may be removed from return catheter **500** after proper positioning of return catheter **500**. In some embodiments, return catheter **500** is connected to pump **420** after it is positioned within the patient's body. As with aspiration catheter **200**, return catheter **500** may be similarly made from a biocompatible polymer. In some embodiments, return catheter **500** may also include a radiopaque marker (not shown) to assist with visualization by radiographic imaging. In further embodiments, return catheter **500** may have about the same diameter as aspiration catheter **200**. In further embodiments, a second filter (not shown) may be positioned along return catheter **500** or at discharge port **420** such that aspirated blood exiting discharge port **420** of pump **400** may be further filtered of debris or other undesired materials prior to being returned to the patient. In some embodiments, return catheter **500** does not include a direct steering mechanism. In alternative embodiments, return catheter **500** may be a steerable catheter. For example, in some embodiments, return catheter **500** may include a steerable tip that is operable using a controller similar to the configuration as described for aspiration catheter **200**. In some embodiments, for example as shown in FIGS. **1**C and **1**D, return catheter **500** may include a tip **510** which is configured to be bend in one or more directions in response to a controller **520** spaced away from tip **510**. Controller **520** may be positioned between tip **510** and discharge port **420** of pump **400** during use according to some embodiments. Tip **510** and controller **520** may have the same configuration as described for distal tip **210** and controller **220**. For instance, in some embodiments, controller **520** may mechanically coupled to return catheter **500** and may be configured to apply tension to one or more steering wires (not shown) which extend from controller **520** and are connected to tip **510** in order to steer tip **510** in one or more directions. In some embodiments, controller **520** includes a dial or knob **522** which can be operated by a user (e.g., surgeon) to bend tip **510** in the one or more directions. Tip **510** may be configured to bend to the same degree as described above for distal tip **210**. In some embodiments, being able to steer tip **510** of return catheter **500** may help precisely position return catheter **500** in the patient's vasculature. This configuration may be particularly useful, for example, in extracorporeal membrane oxygenation (ECMO) procedures and/or heart assist procedures (e.g., right heart assist procedures) according to some embodiments. As shown in FIG. **1**C, each of aspiration catheter **200** and return catheter **500** in system **100** may be steerable. In certain alternative embodiments, as shown in FIG. **1**D, return catheter **500** is steerable while aspiration catheter **200** is a non-steerable catheter. As used in embodiments described herein, a non-steerable catheter refers to a catheter that does not incorporate a direct steering mechanism. While system **100** shown in FIGS. **1**C and **1**D includes oxygenator **330**, in other embodiments oxygenator **330** need not be included. Moreover, it should be understood that the other components described herein in connection with system **100** shown in FIGS. **1**A and **1**B may also be included in the embodiments of system **100** shown in FIGS. **1**C and **1**D. For example, system **100** shown in FIGS. **1**C and **1**D may include a filter which can be configured and positioned in the same manner as filter **300** described herein with reference to FIG. **1**A.

[0046] FIG. **6** provides an illustration of aspiration catheter **200** inserted into vein **1000** according to one embodiment. As shown in this embodiment, aspiration catheter **200** is inserted into vein **1000** over guidewire **600** and stylet **700** in a coaxial arrangement. Guidewire **600** and stylet **700** are sized such that their ends extend beyond the distal tip **210** of aspiration catheter **200** and beyond working port **230**. Moreover catheter **200** may be inserted through a tubular sheath **800** which is configured to provide a port into vein **1000**. Components such as controller **220**, working port **230**, fluid path **250** remain outside the patient's body. As described herein, guidewire **600** and stylet **700** may be used to maneuver aspiration catheter **200** through vein **1000** to the desired location within the patient's vascular system. After aspiration catheter **200** has been positioned into the desired location inside the patient's vasculature, guidewire **600** and stylet **700** can be withdrawn from aspiration catheter **200** through working port **230** according to some embodiments while aspiration catheter **200** remains in place. Following withdrawal of guidewire **600** and stylet **700**, working port **230** may be sealed so as to prevent leakage of blood through working port **230**. Activation of pump **400** (FIGS. **1**A, **1**B)

will then cause aspiration catheter **200** to aspirate blood and/or other materials from the patient which will flow through distal tip **210** into the lumen of aspiration catheter **200** and through fluid path **250** to the other components of system **100** described above. Console **430** may be used to regulate the pressure and/or speed of pump **400** as described above. Where aspiration catheter **200** is a steerable aspiration catheter, as shown for example in FIG. **7**, controller **220** may be used to turn and aim distal tip **210** toward thrombus **1010** to facilitate suction and removal of thrombus **1010** from the patient through aspiration catheter **200** along the pathway depicted by dashed arrows. Precise positioning of distal tip **210** can be verified, for example, using radiographic imaging according to some embodiments. Referring again to system **100** shown in FIG. **1**A, the aspirated blood may be filtered through filter **300** to separate out the thrombus and/or other materials from the blood according to some embodiments, and the blood then returned to the patient via return catheter **500** which may be inserted into the patient's venous or arterial system. The aspirated blood may be modified by other devices, for example, oxygenator **330** of FIG. **1**B prior to being returned to the patient.

[0047] Referring now to FIGS. **8** and **9**, there is shown an example stylet **700** according to an embodiment of the present invention that may be utilized in the positioning of aspiration catheter **200** within the patient's vascular system. In some embodiments, stylet **700** may be utilized in the positioning of return catheter **500** within the patient's vascular system. In some embodiments, stylet **700** includes an elongate, flexible tube having an outer diameter that is sized to fit within aspiration catheter **200** and an inner (lumen) diameter sized to allow passage of guidewire **600** there through. In some embodiments, stylet **700** has an inside diameter that is sized to form a tight fit around guidewire **600**. In some embodiments, stylet **700** is not configured to permit passage of liquid through its lumen when guidewire **600** is received there through. The outer diameter of stylet **700** should be selected to fit within the lumen of the catheter that stylet **700** is being used to position. In some embodiments, the outer diameter of stylet **700** is less than 5 mm, less than 4 mm, less than 3 mm, less than 2 mm, or less than 1 mm. In further embodiments, stylet **700** has a length that is longer than the length of the catheter that stylet **700** is being used to position.

[0048] In some embodiments, stylet **700** may be a steerable stylet having a distal tip **710** which is configured to bend in one or more directions in response to a controller **720** positioned proximally away from distal tip **710**. Controller **720** may be configured to apply tension to one or more steering wires **712***a*,**712***b* which extend from controller **720** and are connected to distal tip **710**. By applying tension to selected steering wires, it is possible to cause distal tip **710** to bend in one or more directions to help steer stylet during insertion into the patient's vasculature. In some embodiments, steering wires **712***a*, **712***b* may be positioned on the outside of stylet **700**, inside the lumen of stylet **700**, or within the tube walls of stylet **700**. In some embodiments, stylet **700** includes one or more pairs of steering wires which are diametrically opposed to each other.

[0049] Controller **720**, in some embodiments, includes a dial or knob **722** which can be operated by a user (e.g., surgeon) to bend distal tip **710** in the one or more directions. For example, rotating dial or knob **722** clockwise may cause distal tip **710** to bend in a first direction whereas rotating dial or knob **722** counterclockwise may cause distal tip **710** to bend in a second direction which is opposite of first direction d**1**. For example, rotation of dial or knob **722** clockwise may pull steering wire **718***a* and/or push steering wire **718***b* causing distal tip **710** to bend in first direction. Rotation of dial or knob **722** counterclockwise may pull steering wire **718***b* and/or push steering wire **718***a* causing distal tip **710** to bend in second direction. Stylet **700** may include additional pairs of opposing steering wires to allow for bending in further directions. It should be understood that controller **720** may also include additional dials or knobs to allow for bending of distal tip **710** in these further directions. It should also be appreciated that while controller **720** includes a dial or knob **722** in the illustrated embodiment for simplicity, other mechanisms such as levers, triggers, switches, thumbwheels, joysticks, buttons, slides, etc. could be used to operate controller **720** to steer distal tip **710**. Controller **720** may be configured to have guidewire **600** extend through it in some embodiments. An example steering mechanism that may be adapted to the present system according to some embodiments is included in the DESTINO™ guiding sheath available from OSCOR®. In some embodiments, stylet **700** does not include any working ports.

[0050] In some embodiments, distal tip **710** is configured to bend from 0 degrees to about 10 degrees in one or more directions in response to operation of controller **720**. In some embodiments, distal tip **710** is configured to bend from 0 degrees to about 15 degrees in one or more directions in response to operation of controller **720**. In some embodiments, distal tip **710** is configured to bend from 0 degrees to about 20 degrees in one or more directions in response to operation of controller **720**. In some embodiments, distal tip **710** is configured to bend from 0 degrees to about 25 degrees in one or more directions in response to operation of controller **720**. In some embodiments, distal tip **710** is configured to bend from 0 degrees to about 30 degrees in one or more directions in response to operation of controller **720**. In some embodiments, distal tip **710** is configured to bend from 0 degrees to about 40 degrees in one or more directions in response to operation of controller **720**. In some embodiments, distal tip **710** is configured to bend from 0 degrees to about 45 degrees in one or more directions in response to operation of controller **720**. In some embodiments, distal tip **710** is configured to bend from 0 degrees to about 50 degrees in one or more directions in response to operation of controller **220**. In some embodiments, distal tip **710** is configured to bend from 0 degrees to about 60 degrees in one or more directions in response to operation of controller **720**. In some embodiments, distal tip **710** is configured to bend from 0 degrees to about 65 degrees in one or more directions in response to operation of controller **720**. In some embodiments, distal tip **710** is configured to bend from 0 degrees to about 70 degrees in one or more directions in response to operation of controller **720**. In some embodiments, distal tip **710** is configured to bend from 0 degrees to about 75 degrees in one or more directions in response to operation of controller **720**. In some embodiments, distal tip **710** is configured to bend from 0 degrees to about 80 degrees in one or more directions in response to operation of controller **720**. In some embodiments, distal tip **710** is configured to bend from 0 degrees to about 85 degrees in one or more directions in response to operation of controller **720**. In some embodiments, distal tip **710** is configured to bend from 0 degrees to about 90 degrees in one or more directions in response to

operation of controller **720**. In some embodiments, distal tip **710** is configured to bend from 0 degrees to about 100 degrees in one or more directions in response to operation of controller **720**. In some embodiments, distal tip **710** is configured to bend from 0 degrees to about 135 degrees in one or more directions in response to operation of controller **720**. In some embodiments, distal tip **710** is configured to bend from 0 degrees to about 180 degrees in one or more directions in response to operation of controller **720**. In some embodiments, distal tip **710** is configured to bend no more than 90 degrees in any one direction. In some embodiments, distal tip **710** is configured to bend no more than 135 degrees in any one direction. In some embodiments, distal tip **710** is configured to bend no more than 180 degrees in any one direction.

[0051] FIG. **9** shows stylet **700** positioned through working port **230** and aspiration catheter **200** according to one embodiment. Stylet **700** may have a length that is longer than a length of aspiration catheter **200** such that distal tip **710** of stylet **700** extends beyond distal tip **210** of aspiration catheter **210** during use. Stylet **700** may also extend beyond working port **230**. As discussed above, in some embodiments, stylet **700** may be configured to provide a transition between the larger diameter aspiration catheter **200** and the smaller diameter guidewire **600**. In further embodiments, stylet **700** helps provide rigidity to aspiration catheter **200** to help with insertion of aspiration catheter **200** through the patient's vasculature. In some embodiments, having a distal tip **710** that can be steered using controller **720** helps to maneuver and position stylet **700** and aspiration catheter **200** into the desired position within the patient's vasculature. Once catheter **200** is positioned, stylet **700** can be withdrawn from aspiration catheter **200** (e.g., through working port **230**) while aspiration catheter **200** remains in place as described above. It should be understood that controller **720** would remain outside of the patient's body during use. In some embodiments, stylet **700** may be maneuvered together with aspiration catheter **200** coaxially positioned around stylet **700** through the patient's vasculature. In some embodiments, stylet **700** is first inserted into the patient's vasculature and is navigated through the patient's vasculature until distal tip **710** reaches a desired location within a vessel. Aspiration catheter **200** may then be slid coaxially over stylet **700** until distal tip **210** of aspiration catheter **200** reaches the desired location, and stylet **700** can then be withdrawn from aspiration catheter **200** (e.g., through working port **230**) while aspiration catheter **200** remains in place within the vessel. In some embodiments, return catheter **500** can be similarly positioned within a patient's vasculature using a steerable stylet. In some embodiments, a system according to the present invention includes a separate stylet **700** for each of aspiration catheter **200** and return catheter **500**. This may be appropriate, for example, in embodiments where aspiration catheter **200** and return catheter **500** have different lumen diameters. In certain other embodiments, aspiration catheter **200** and return catheter may be used with the same stylet **700**.

[0052] It should be understood that stylet **700**, in some embodiments, may be used for positioning steerable or non-steerable catheters. For example, in certain further embodiments of the present invention, both aspiration catheter **200** and return catheter **500** are non-steerable catheters and do not include direct steering mechanisms. In some such embodiments, one or both of aspiration catheter **200** and return catheter **500** may be positioned within a desired location within a patient's blood vessel by way of a steerable stylet **700**, which is then removed from aspiration catheter **200** and/or return catheter **500**. In other embodiments, only one of aspiration catheter **200** and return catheter is steerable and includes a direct steering mechanism. A steerable stylet **700** may be used for positioning the steerable catheter or the non-steerable catheter.

[0053] It should also be appreciated that other stylets that are known in the art may be alternatively used for positioning aspiration catheter **200** and/or return catheter **500**, for example, non-steerable stylets. It should also be appreciated that stylet **700** described herein is not necessarily limited to use with the aspiration system of the present invention. For example, stylet **700** may also be used for positioning catheters other than aspiration catheter **200** or return catheter **500**. In further embodiments, stylet **700** may be configured for positioning catheters and cannulas that are configured for use in other medical procedures. For example, in other embodiments, stylet **700** with steerable distal tip **710** may be particularly useful for maneuvering a cannula through a patient's pulmonary artery for positioning a right heart assist device. In one such embodiment, stylet **700** would be positioned within the lumen of the cannula and the assembly steered into position within the pulmonary artery. Once in the desired location, stylet **700** would be withdrawn from the cannula while leaving the cannula in place. Stylet **700** could likewise be adapted for use in positioning other existing catheters and cannulas known in the art. In yet further embodiments, a steerable stylet **700** could be used for positioning a catheter or cannula without additional guidewire **600**. In some such embodiments, stylet **700** need not be hollow or include a lumen.

[0054] It is to be understood that at least some of the figures and descriptions of the invention have been simplified to focus on elements that are relevant for a clear understanding of the invention, while eliminating, for purposes of clarity, other elements that those of ordinary skill in the art will appreciate may also comprise a portion of the invention. However, because such elements are well known in the art, and because they do not necessarily facilitate a better understanding of the invention, a further description of such elements is not provided herein.

[0055] It will be further appreciated by those skilled in the art that changes could be made to the exemplary embodiments shown and described above without departing from the broad inventive concept thereof. It is understood, therefore, that the present invention is not limited to the exemplary embodiments shown and described, but it is intended to cover modifications within the spirit and scope of the present invention as defined by the claims. It should also be apparent that individual elements identified herein as belonging to a particular embodiment may be included in other embodiments of the invention. Moreover, the scope of the present application is not intended to be limited to the particular embodiments of the process, machine, manufacture, and composition of matter, means, methods and steps described in the specification. As one of ordinary skill in the art will readily appreciate from the disclosure herein, processes, machines, manufacture, composition of matter, means, methods, or steps, presently existing or later to be developed that perform substantially the same function or achieve substantially the same result as the corresponding embodiments described herein may be utilized according to

the present invention. Moreover, unless specifically set forth herein, the terms "a," "an," and "the" are not limited to one element but instead should be read as meaning "at least one."

What is claimed is:

1. A system for removing material from the body of a patient, the system comprising:

an aspiration catheter insertable into the patient comprising a distal end having a steerable tip configured to bend in one or more directions;

a controller mechanically coupled to the aspiration catheter and operable by a user to bend the steerable tip in the one or more directions;

a pump comprising an inlet port and a discharge port, the inlet port being in fluid communication with the aspiration catheter, the pump configured to generate a negative pressure at the inlet port and a positive pressure at the discharge port during use; and

a return catheter in fluid communication with the discharge port of the pump and configured to be inserted into the patient.

2. The system according to claim **1**, wherein the aspiration catheter has a size equal to or greater than 10 Fr.

3. The system according to claim **1**, wherein the aspiration catheter has a lumen diameter of at least 3 mm.

4. The system according to claim **1**, wherein the negative pressure at the inlet port is between 0 mmHg to about −150 mmHg.

5. The system according to claim **1**, wherein the pump is configured to generate a flow rate of at least 100 mL/min through the aspiration catheter.

6. The system according to claim **1**, wherein the pump is configured to generate a flow rate of about 2 L/min to about 4 L/min through the aspiration catheter

7. The system according to claim **1**, further comprising at least one working port configured to allow insertion of one or more devices into the aspiration catheter.

8. The system according to claim **7**, wherein the one or more devices includes a stylet.

9. The system according to claim **7**, wherein the one or more devices includes a guidewire.

10. The system according to claim **7**, wherein the at least one working port includes a Tuohy Borst adaptor.

11. The system according to claim **7**, wherein the at least one working port provides a fluid tight seal around the one or more devices when the one or more devices are inserted into the aspiration catheter.

12. The system according to claim **7**, wherein the at least one working port is removably connected to the controller by a connector.

13. The system according to claim **12**, wherein the connector is a quick connect fitting.

14. The system according to claim **7**, wherein the at least one working port comprises at least two working ports having different sizes.

15. The system according to claim **1**, wherein the aspiration catheter includes one or more steering wires connected to the steerable tip, the controller configured to selectively apply tension on the one or more steering wires to bend the steerable tip in the one or more directions.

16. The system according to claim **1**, wherein the steerable tip is configured to bend at an angle of about 0 to about 90 degrees.

17. The system according to claim **1**, further comprising a filter device positioned in fluid communication between the the aspiration catheter and the return catheter, the filter device configured to trap solid material received in the aspiration catheter from the body of the patient.

18. The system according to claim **1**, further comprising an oxygenator configured to add oxygen to and/or remove carbon dioxide from blood from the patient, the oxygenator being positioned in fluid communication between the aspiration catheter and the return catheter.

19. The system according to claim **1**, further comprising a stylet sized and configured to be received within a lumen of the aspiration catheter or the return catheter.

20. The system according to claim **19**, wherein the stylet comprises a steerable tip and a controller operable by a user to bend the steerable tip of the stylet in one or more directions.

21. The system according to claim **1**, wherein the system includes a second controller and the return catheter includes a steerable tip configured to bend in one or more directions in response to operation of the second controller.

22. A system for removing material from the body of a patient, the system comprising:

an aspiration catheter insertable into the patient;

a pump comprising an inlet port and a discharge port, the inlet port being in fluid communication with the aspiration catheter, the pump configured to generate a negative pressure at the inlet port and a positive pressure at the discharge port during use;

a return catheter in fluid communication with the discharge port of the pump and configured to be inserted into the patient; and

a controller operable by a user to bend a tip of the aspiration catheter or a tip of the return catheter in the one or more directions.

23. The system according to claim **22**, wherein the controller is configured to selectively apply tension to one or more steering wires to bend the tip of the aspiration catheter or a tip of the return catheter in the one or more directions.

24. The system according to claim **22**, further comprising a filter device positioned in fluid communication between the the aspiration catheter and the return catheter, the filter device configured to trap solid material received in the aspiration catheter from the body of the patient.

25. The system according to claim **22**, further comprising an oxygenator configured to add oxygen to and/or remove carbon dioxide from blood from the patient, the oxygenator being positioned in fluid communication between the aspiration catheter and the return catheter.

26. A system for removing material from the body of a patient, the system comprising:

an aspiration catheter insertable into the patient;

a pump comprising an inlet port and a discharge port, the inlet port being in fluid communication with the aspiration catheter, the pump configured to generate a negative pressure at the inlet port and a positive pressure at the discharge port during use;

a return catheter in fluid communication with the discharge port of the pump and configured to be inserted into the patient; and

a stylet that is sized and configured to be inserted through the aspiration catheter and/or the return catheter, the

stylet including a steerable tip and a controller operable by a user to bend the steerable tip of the stylet in one or more directions.

27. The system according to claim **26**, further comprising a second controller operable by a user to bend a tip of the aspiration catheter or a tip of the return catheter in the one or more directions.

28. The system according to claim **26**, wherein neither the aspiration catheter nor the return catheter includes a direct steering mechanism.

29. The system according to claim **26**, further comprising a filter device positioned in fluid communication between the the aspiration catheter and the return catheter, the filter device configured to trap solid material received in the aspiration catheter from the body of the patient.

30. The system according to claim **26**, further comprising an oxygenator configured to add oxygen to and/or remove carbon dioxide from blood from the patient, the oxygenator being positioned in fluid communication between the aspiration catheter and the return catheter.

* * * * *